AD-A142 337

AFWAL-TR-82-4063

VOLUME V

INTEGRATED COMPUTER-AIDED MANUFACTURING (ICAM) ARCHITECTURE PART III

VOLUME V - COMPOSITE FUNCTION MODEL OF "MANUFACTURE PRODUCT" (MFGØ)

SofTech, Inc.
460 Totten Pond Road
Waltham, MA 02154

September 1983

Final Report for September 1980 - October 1982

DTIC FILE COPY

APPROVED FOR PUBLIC RELEASE; DISTRIBUTION UNLIMITED

DTIC

MATERIALS LABORATORY
AIR FORCE WRIGHT AERONAUTICAL LABORATORIES
AIR FORCE SYSTEMS COMMAND
WRIGHT PATTERSON AIR FORCE BASE, OHIO 45433

84 06 015

NOTICES

When Government drawings, specifications, or other data are used for any purpose other than in connection with a definitely related Government procurement operation, the United States Government thereby incurs no responsibility nor any obligation whatsoever; and the fact that the Government may have formulated, furnished, or in any way supplied the said drawings, specifications, or other data, is not to be regarded by implication or otherwise as in any manner licensing the holder or any other person or corporation, or conveying any rights or permission to manufacture, use, or sell any patented invention that may in any way be related thereto.

This report has been reviewed by the Office of Public Affairs (ASD/PA) and is releasable to the National Technical Information Service (NTIS). At NTIS, it will be available to the general public, including foreign nations.

This technical report has been reviewed and is approved for publication.

RICHARD R. PRESTON, Captain, USAF
Project Manager
Computer Integrated Manufacturing Branch
Manufacturing Technology Division

Approval Date

FOR THE COMMANDER

NATHAN G. TUPPER
Chief
Computer Integrated Manufacturing Branch
Manufacturing Technology Division

Approval Date

"If your address has changed, if you wish to be removed from our mailing list, or if the addressee is no longer employed by your organization, please notify AFWAL/MLTC, Wright-Patterson AFB, Ohio 45433 to help us maintain a current mailing list."

Copies of this report should not be returned unless return is required by security considerations, contractual obligations, or notice on a specific document.

UNCLASSIFIED

FTR110410000U
8 September 1983

SECURITY CLASSIFICATION OF THIS PAGE (When Data Entered)

REPORT DOCUMENTATION PAGE	READ INSTRUCTIONS BEFORE COMPLETING FORM
1. REPORT NUMBER: AFWAL-TR-82-4063 Volume V	2. GOVT ACCESSION NO.: AD-A142 337
3. RECIPIENT'S CATALOG NUMBER: FTR110410000U	
4. TITLE and Subtitle: INTEGRATED COMPUTER AIDED MANUFACTURING (ICAM) ARCHITECTURE PART III/Volume V - Composite Function Model of "Manufacture Product" (MFGØ)	5. TYPE OF REPORT & PERIOD COVERED: Final - September 1980 through Oct. 1982
	6. PERFORMING ORG. REPORT NUMBER: 1080-34
7. AUTHOR(s): S. Smith - SofTech; T. Ruegsegger - SofTech; W. St. John - SofTech	8. CONTRACT OR GRANT NUMBER(s): F33615-80-C-5109
9. PERFORMING ORGANIZATION NAME AND ADDRESS: SofTech, Inc. 460 Totten Pond Road Waltham, MA 02154	10. PROGRAM ELEMENT, PROJECT, TASK AREA & WORK UNIT NUMBERS: P.E. 78011F; Project Priority 1104
11. CONTROLLING OFFICE NAME AND ADDRESS: Materials Laboratory (AFWAL/MLTC) AF Wright Aeronautical Laboratories (AFSC) Wright-Patterson AFB, OH 45433	12. REPORT DATE: September 1983
	13. NUMBER OF PAGES: 311
14. MONITORING AGENCY NAME & ADDRESS (if different from Controlling Office)	15. SECURITY CLASS. (of this report): UNCLASSIFIED
	15a. DECLASSIFICATION DOWNGRADING SCHEDULE

16. DISTRIBUTION STATEMENT (of this Report)

Approved For Public Release; Distribution Unlimited

17. DISTRIBUTION STATEMENT (of the abstract entered in Block 20, if different from Report)

18. SUPPLEMENTARY NOTES

19. KEY WORDS (Continue on reverse side if necessary and identify by block number)

Manufacturing Architecture	ICAM	MFG1
Model of Manufacturing	IDEF	MFG01 Glossary
Integrated Computer-Aided Manufacturing	MFG0	
Subsystem Integration	DESIGN0	
Technology Transfer	DESIGN1	

20. ABSTRACT (Continue on reverse side if necessary and identify by block number)

The Integrated Computer Aided Manufacturing (ICAM) Architecture Part III was initiated to maintain and update the existing manufacturing architecture as well as develop training courses to assist in the transition of IDEF applications, concepts and procedures to other Air Force programs. This volume, Volume V, presents the composite view depicting manufacturing as it exists today in the form of an "AS IS" Function Model of Manufacturing.

DD FORM 1 JAN 73 1473 EDITION OF 1 NOV 65 IS OBSOLETE

UNCLASSIFIED

SECURITY CLASSIFICATION OF THIS PAGE (When Data Entered)

SECURITY CLASSIFICATION OF THIS PAGE(When Data Entered)

This report is presented in the following eight volumes:

1. Volume I - Architecture Part III Accomplishments
2. Volume II - Procedures
3. Volume III - Composite Function Model of "Design Product" (DES0)
4. Volume IV - Composite Information Model of "Design Product" (DES1)
5. Volume V - Composite Function Model of "Manufacture Product" (MFG0)
6. Volume VI - Composite Information Model of "Manufacture Product" (MFG1)
7. Volume VII - MFG01 Glossary
8. Volume VIII - Technology Transfer

SECURITY CLASSIFICATION OF THIS PAGE(When Data Entered)

FTR110410000U
8 September 1983

FOREWORD

This interim technical report provides the results of the Function Modeling Task associated with the "Manufacture Product" Model. This work was performed as a part of U.S. Air Force Contract #F33615-80-C-5109, "ICAM ARCHITECTURE, PART III," covering the period of September 1980 through October 1982. The contract was sponsored by the Computer Integrated Manufacturing Branch, Materials Laboratory, Air Force Wright Aeronautical Laboratories, Air Force Systems Command, Wright Patterson Air Force Base, Ohio, 45433. The Air Force Technical Manager for ICAM ARCHITECTURE PART III was Capt Steve R. LeClair for the basic contract and Capt Richard R. Preston for the option phase.

Ms Bette R. Davis was the SofTech Program Manager. The other contributors to this document are were:

Rockwell, International	Richard Heine
Vought	Al Reingold

DTIC
COPY
INSPECTED
2

A-1

TABLE OF CONTENTS

Section		Page
1	SCOPE	1-1
	1.1 Identification	1-1
	1.2 Background	1-1
	1.3 Functional Description of Document	1-4
2	MANUFACTURE PRODUCT (MFGO)	2-1
	2.1 Node Index - MFGO	2-1
	2.2 Model Diagrams	2-17
3	FINAL REPORT DOCUMENT REQUEST ORDER FORM	3-1
APPENDIX A	MFGO NODE CHART	A-1

SECTION 1
SCOPE

1.1 Identification

This volume documents that part of the ICAM Architecture of Manufacturing designated as MFGØ. MFGØ depicts the functional "As Is" architecture of the diverse activities presently performed within aerospace manufacturing.

This part of the architecture has been developed using IDEFØ (ICAM Definition language) function modeling. The Model presented here, MFGØ, is a composite function model of the activities within "Manufacture (Aerospace) Product." This composite view architecture represents those functions most typical of the majority of aerospace manufacturers in the United States and is not intended to represent any specific company.

This volume extends and supercedes Volume VII - Composite Function Model of "Manufacture Product" (MFGØ) published in June of 1981 as part of the ICAM Architecture Part II Project Priority 1102.

This volume documents work performed under ICAM Project Priority 1104 - ICAM Architecture of Manufacturing Part III.

1.2 Background

Developments in the use of the computer as an aid to manufacturing have proceeded in a modular but disjointed fashion. Hardware and software systems have been designed and developed to solve the particular problem of the day and generally have been limited in scope in order to most expediently aid the performance of a particular manufacturing function. The events subsequent to the development of N/C machine tools and the APT language are examples of this approach. Integration of these systems has been attempted in some cases, but only as an afterthought. This situation has resulted in the proliferation of disjointed computer software and hardware that have in many ways tended to actually magnify problems in manufacturing.

The long-term adverse effect of continuing development in this fragmented way has been recognized both in the United States and in many other countries. The evidence, both abroad and in this country, advises that the economic and sociological benefits to be gained from such integration and the resulting synergism far exceed those benefits that have been accepted as being directly attributable to individual development efforts. This is particularly true in discrete-parts, batch manufacturing companies because of such factors as the dual requirements to maintain both a flexible fabrication base and a highly efficient, controlled operation. (The prime aerospace companies and their vast network of subcontractors fall into this group.)

The Air Force Integrated Computer-Aided Manufacturing (ICAM) Program has been established to promote development of integrated CAM systems in the United States, and particularly within the aerospace industry. The ICAM approach involves the use of "Architecture," a structured means for applying computer technology to manufacturing by using models to better understand, communicate and analyze manufacturing and manufacturing systems.

The purpose of architecture is to establish clear and concise communication tools which permit discussion and a common understanding. The architecture is seen as the key to the structuring of generic CADCAM programs having broad applicability and as a vehicle which facilitates the transfer of CADCAM technology.

The Architecture of Manufacturing is comprised of a function, information and/or dynamics model and is to be that set of structured information that relate to the reader a formal description of manufacturing itself. The term "architecture," when used with respect to manufacturing, means a model or set of models which represent manufacturing. The architecture provides an integrated picture with which to understand aerospace manufacturing.

The first step in increasing manufacturing productivity is to understand current manufacturing practice precisely and to record this understanding concisely. This development of understanding has two main phases:

- Study specific company manufacturing
- Evolve a composite understanding

Understanding of current manufacturing must be based on the detailed factual information which describes manufacturing practice in those companies which successfully produce aerospace products. This has been called "Factory View" information. The Factory View of manufacturing is different for each company, for each division of each plant within a company, and even somewhat different for each organization and each individual within each plant.

One objective of ICAM is to develop improvements in manufacturing which will be broadly applicable across the whole aerospace industry. In order to do this, it is necessary to have some understanding of "general or generic manufacturing practice." Such an understanding emphasizes the essential function, information flow, and material flow necessary to all manufacturing, while deemphasizing the differences of organization and terminology among the various factory views.

The model representing this aggregate understanding is called the "Composite View" of manufacturing. The composite view model presented in this volume depicts manufacturing as it exists today in the form of a

function model. The composite view of the existing functions carried out in manufacturing which have been produced in this project and Architectures Part I and II emphasize the technical aspects of current practice for the production of a single, new major aerospace product, such as an airplane.

During the course of Project 1104, several tasks were undertaken that resulted in recommendations for changes to the Manufacturing Function Architecture Part II. The four major sources of these changes were:

1) The MFGØ Arrow Trace Task
2) The 2-way Arrow Removal Task
3) Addition of Subsystem, Support Arrows Task
4) Integration of QAØ into MFGØ Task.

1.2.1 Arrow Trace

The MFGØ Arrow Trace was the largest source of change recommendations to the Manufacturing Architecture. The close examination of MFGØ required by this task produced a large body of suggested changes. These changes varied greatly and were categorized by relative significance. Although no numerical breakdown of the amount of changes in each category is available, suffice it to say that there were many more minor changes than major ones.

1.2.2 2-Way Arrow Removal

A second source of changes to MFGØ was the removal of 2-way arrows from the activity diagrams. The decision to remove the 2-way arrows arose from a concern for the readability of the diagrams. It was felt that the syntactic form, namely, a double-headed arrow with accompanying dots, did not clearly portray (in a graphic sense) the feedback loop it represented. The transformation of the 2-way arrows into appropriate feedback loops did succeed in depicting the circular flow of data. On the other hand, the proliferation of new arrows added more pipelines to some already-crowded diagrams. It was also noted that, in the case of diagrams with numerous ICOM's, the deletion of a 2-way arrow means that the feedback relationship between an input or control and an output would not be explicit because other entering and exiting ICOM's obscure the relationship. It was also noted that the removal of the 2-way arrows invalidated a significant portion of the arrow trace information (which was based on a version of MFGØ having 2-way arrows).

1.2.3 Subsystem Support Arrows

A third source of MFGØ changes was the addition of subsystem support arrows. These appear as "mechanisms" that alert the reader to subsystem support roles. The subsystems incorporated into the

architecture within this volume are SMC (Sheet Metal Center), MCMM (Manufacturing Control and Material Management) and QA (Quality Assurance). The mechanism arrows are labelled "subsystem" where more than one subsystem supports an activity.

1.2.4 QAØ Integration

When the 1981 version of the model was published, two subsystem models had been processed through the integration procedure as it then existed. These were MCMM and SMC. The links between those models and MFGØ were documented by a matrix, one of which was developed for each model. This version of the model has had the information from those matrices added in the form of support arrows on the appropriate boxes.

The QA (Quality Assurance) model was integrated into MFGØ using a revised procedure which is presented in Volume II of this report. This required the modification of about 20 existing diagrams and the addition of about 25 new diagrams. These new diagrams are, in most cases, redrawn child diagrams from the QA model. These additions required modification of ICOM's on existing MFGØ diagrams and the QA diagrams that were integrated as children of the existing MFGØ nodes.

1.3 Functional Description of Document

This volume (V) documents the Architecture of Manufactuing function model (MFGØ) which when combined with Volumes III - DESØ, IV - DES1, VI - MFG1 of this report, make up the complete ICAM Architecture of Manufacturing. Volume V - MFGØ is basically an integrated composite $IDEF_Ø$ model of Aerospace manufacturing. The document contains a complete node index for each model diagram. This model contains both extensive text and diagrams that have been developed by various authors and coalition members on a variety of ICAM projects. Some of these diagrams exist in separate models that have been integrated into the present architecture.

This volume is intended as a guide for the development of $IDEF_Ø$ models by manufacturing analysts and industrial engineers involved in the integration of new manufacturing and computer system technology into the production environment. It provides a common baseline for communication and decision making during the "Understand the Problem" phase of such projects. It can be used by management and engineers to identify the areas impacted by proposed changes and introduction of new technologies.

Experience, from current Technology Modernization Programs, has shown that the function model MFGØ can serve as either a guide for model development or be annotated to provide a company specific architecture.

Section 2

MANUFACTURE PRODUCT (MFGØ)

2.1 Node Index

2.1.1 Diagrams are Indexed by Node Numbers

In an IDEFØ diagram, the component parts are shown as numbered boxes. Each box is detailed in one diagram at the next lower level until a sufficient level of detail is reached.

The example shown below says that Manufacture Product (A0) is broken down into six sub-functins. A1 through A6. Plan Production (A3) is further broken down into four, more detailed sub-functions (A31 through A34).

Levels Of Diagrams

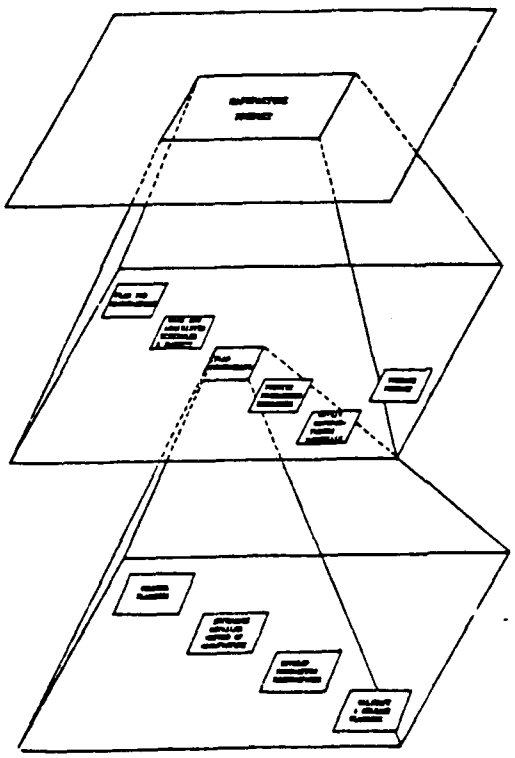

Corresponding Nodes Index

A-0 Manufacture Product (Context)

A0 Manufacture Product

A3 Plan Production

The sequence diagrams in the model is indicated by a "node number" derived from the numbering boxes. For example, A21 is the diagram which details box 1 on the A2 diagram. Similarly, A2 details box 2 on the A0 diagram, which is the top diagram of the model. This hierarchy may be shown in an index of diagram names and their node numbers called a "node index". The node index serves as a table of contents for a model. Diagrams at the same level of detail are indented at the same page position in the index. This Section 2.1 contains the Node Index for the model, Manufacture Product.

2.1.2 How to Explore a Model

IDEFØ models may be used as a reference, providing all details of a particular subject, or as a tutorial, providing an overview of the whole system. To read the model for its overview, use the node index to find all high-level diagrams. Disregard detail diagrams. For example, an overview is obtained as described above by studying, A-0, A0, A1, A2, and A3 shown on following typical node index.

A-0 Manufacture Product (Context)

A0 Manufacture Product

A1 Plan for Manufacture

A2 Make and Administer Schedules and Budgets

A21 Develop Master Schedule

A22 Develop Coordinating Schedules

A23 Estimate Costs and Make Budgets

A24 Monitor Performance to Schedule and Budget

A3 Plan Production

A31 Control Planning

A32 Determine Detailed Method of Manufacture

A321 Complete Manufacturing Parts List

A322 Decide Make/Buy for Each Part

A323 Determine Precise Form of Subparts

To read the model for reference, use the index to find all diagrams detailing the subject of interest. Disregard unrelated diagrams. For example, to study the subject "Determine Detailed Method of Manufacture", examine the three diagrams A321 through A323, plus their parent, A32, as shown on this typical node list.

A-0 Manufacture Product (Context)

A0 Manufacture Product

A1 Plan for Manufacture

A2 Make and Administer Schedules and Budgets

A21 Develop Master Schedule

A22 Develop Coordinating Schedules

A23 Estimate Costs and Make Budgets

A24 Monitor Performance to Schedule and Budget

A3 Plan Production

A31 Control Planning

A32 Determine Detailed Method of Manufacture

A321 Complete Manufacturing Parts List

A322 Decide Make/Buy for Each Part

A323 Determine Precise Form of Subparts

Page

2.1.3 Node Index - MFGØ

A-3 Get and Use Aerospace Product (Context) 2-27
A-2 Get and Use Aerospace Product 2-29
1 Plan to Accomplish Objectives
A-1 2 Develop and Produce Aerospace Product 2-33
1 Manage Product
2 Design Product
A-0 3 Manufacture Product 2-37
4 Provide for Product Logistics
3 Use Product
4 Maintain, Retrofit, Rebuilt Product

Node Index of Main Model

A-0 Manufacture Product (Context) 2-39
A0 Manufacture Product 2-30
A1 Plan for Manufacture 2-51
A11 Assume a Structure and Method of Manufacture 2-55
A111 Assume and Tabulate Major Configuration Units 2-59
A1111 Review Product Design and Manufacturing Requirements
A1112 Establish Optimum Production Breaks
A1113 Establish Logical Major Unit Configurations
A112 Tentatively Decide Make or Buy 2-61
A1121 Evaluate Required Capabilities and Capacities
A1122 Determine Available In-House Capabilities and Capacities
A1123 Determine Outside (Vendor) Capabilities and Capacities
A1124 Determine Make or Buy Sourcing
A113 Assume Manufacturing Method of Major Units 2-63
A1131 Assume Major Assembly Breaks
A1132 Assume Sub-Assembly Breaks
A1133 Review Major Tool and Space Requirements
A1134 Prepare Station Flow Plan

Node Index - MFGØ (Continued)

			Page
	A114	Assume Tentative Assembly Method	2-65
		A1141 Establish Assembly Plan	
		A1142 Establish Tooling and Assembly Fixture Requirements	
		A1143 Illustrate Assembly Method and Tooling Concept	
		A1144 Prepare Assembly Station Plan	
A12	Estimate Requirements, Time and Cost to Produce		2-67
	A121	Estimate Resource Needs	2-71
		A1211 Estimate Facilities Requirements	
		A1212 Estimate Equipment Requirements	
		A1213 Estimate Tool Requirements	
		A1214 Estimate Personnel Requirements	
	A122	Estimate Costs to Purchase or Make	2-73
		A1221 Estimate Recurring Costs	
		A1222 Estimate Non-Recurring Costs	
		A1223 Estimate Vendor Costs	
		A1224 Sum Costs	
	A123	Estimate Timing for Start Up and Production	2-75
		A1231 Develop Spans for Each Station	
		A1232 Develop Shift Requirements	
		A1233 Develop Tool Requirements	
A13	Develop Production Plans		2-77
	A131	Confirm Structure and Method of Manufacture	2-81
		A1311 Review Major Section Manufacture Breakdown	
		A1312 Confirm Major Assemblies	
		A1313 Confirm Sub-Assemblies	
		A1314 Review Major Tool and Space Rights	
		A1314 Confirm Station Plan	
	A132	Develop Line Assembly & Installation Sequence	2-83
		A1321 Develop Assembly Sequence Plan	
		A1322 Develop Kit Plan	
		A1323 Develop Assembly and Installation Operation Plan	
	A133	Develop Batch Assembly Sequence	2-85
		A1331 Develop Batch Assembly List	
		A1332 Develop Assembly Sequence and Kit Plan	

Node Index - MFGØ (Continued)

			Page
		A1333 Develop Batch Assembly Plan	
	A134	Develop Detail Parts Sequence	2-87
		A1341 Estimate Number of Detail Parts by Type	2-89
		A13411 Segregate Parts by Type	
		A13412 Estimate Number of Manufactured Parts by Type	
		A13412 Sum of Number of Detail Parts by Type	
		A1342 Develop Detail Parts Fabrication Sequence	
		A1343 Develop Detail Parts Fabrication	
A14	Develop Support Activities Plans		2-91
	A141	Develop QA Plan	2-93
		A1411 Establish QA Requirements for Production	2-95
		A14111 Review Contract SOW	
		A14112 Determine QA/QC Requirement Deviations	
		A14113 Evaluate Contract QA/QC Requirements	
		A14114 Determine Production QA/QC Requirements	
		A14115 Issue Quality Requirements	
		A1412 Define Required QA Resources	
		A1413 Issue QA Plan	
	A142	Develop Materials Plan	2-97
		A1421 Review Plans and Schedules to Determine Material Requirements	
		A1422 Identify Long Lead Requirements	
		A1423 Select Subcontractors/Suppliers	
		A1424 Issue Material Plan	
	A143	Develop Tooling Plan	2-99
		A1431 Decide Tooling Approach (Policy)	
		A1432 Identify Project Tool Requirements	
		A1433 Identify Long Lead Tool Requirements	
		A1434 Identify Non Project Tools	
		A1435 Issue Tooling Plan	
	A144	Develop Facilities and Equipment Plan	2-101
		A1441 Review Plans and Schedules to Determine Facilities and Equipment Requirements	
		A1442 Identify Long Lead Facilities	

Node Index - MFGØ (Continued)

				Page
			and Equipment Requirements	
		A1443	Identify Special Facilities and Equipment Requirements	
		A1444	Do Conceptual Estimate	
		A1445	Review and Issue Facilities and Equipment Plan	
	A145		Develop Personnel Plan	2-103
		A1451	Review Plans and Schedule to Determine Manpower Requirements	
		A1452	Develop Hiring Plan	
		A1453	Develop Training Plan	
		A1454	Review and Issue Personnel Plan	
A2	Make and Administer Schedules and Budgets			2-105
	A21		Develop Master Schedule	2-109
		A211	Apply Time Spans	2-113
		A2111	Review Manufacturing Plan and Engineering Release Milestones	
		A2112	Develop Procurement Lead Times	
		A2113	Develop Resource Lead Times	
		A2114	Develop Fabrication Lead Times	
		A2115	Develop Assembly and Installation Times	
		A212	Integrate Into Preliminary Master Schedule	2-117
		A2121	Develop Logical Schedule Sequence	
		A2122	Layout Time Spans on Schedule Chart	
		A2123	Finalize Preliminary Master Schedule	
		A213	Identify Master Schedule Conflicts	2-119
		A2131	Review With Functional Organizations for Conflicts	
		A2132	Identify Contract Conflicts and Responsibilities	
		A2133	Identify Resource Conflicts and Responsibilities	
		A2134	Identify Procurement Conflicts and Responsibilities	
		A214	Resolve Master Schedule Conflicts	2-121
		A2141	Determine Severity and Consequences of Conflicts	
		A2142	Negotiate/Resolve Contractual Conflicts	

Node Index - MFGØ (Continued)

			Page
		A2143 Negotiate/Resolve Resource Conflicts	
		A2144 Negotiate/Resolve Procurement Conflicts	
	A215	Approve Master Schedule	2-123
		A2151 Review for Functional Considerations	
		A2152 Review for Program Considerations	
		A2153 Review for Overall Business Impact	
		A2154 Issue Approved Master Schedule	
A22	Develop Coordinating Schedules		2-125
	A221	Establish Setbacks and Apply Flow Times	2-129
		A2211 Refine Item and Station Flows	
		A2212 Develop Setbacks	
		A2213 Assign Times to Setbacks	
		A2214 Resolve Manufcturing and Engineering Differences	
	A222	Prepare First Article Schedule	2-131
	A2221	Determine Manufacturing Planning Completion Dates	
		A2222 Determine Resource and Procurement Availability Dates	
		A2223 Reconcile Engineering Drawing and Manufacturing Need Dates	
		A2224 Complete Schedule and Validate to Commitments	
	A223	Develop Production Schedule	2-133
		A2231 Develop Acceleration Curves	
		A2232 Determine Start and Completion Dates	
		A2233 Analyze Resource Requirements	
		A2234 Determine Lot Sizes	
		A2235 Reconcile to Contract Requirements	
	A224	Develop Schedules for Continuing Support Activities	2-137
		A2241 Analyze Manpower Loading Plan	
		A2242 Analyze Long Lead Material Requirements	
		A2243 Analyze Material Inventory Requirements	
		A2244 Identify Material Schedule Problems	
		A2245 Identify Manpower Loading Problems	

Node Index - MFG0 (Continued)

				Page
	A23	Estimate Costs and Make Budgets		2-139
		A231	Estimate Cost Planning Packages	
		A232	Assign Lot Number Accounting	
		A233	Develop Cost Accounting Packages	
		A234	Assign Structure and Release Sub-Accounts	
		A235	Issue Functional Work Authorizations	
	A24	Monitor Performance to Schedule and Budget		2-141
		A241	Develop Monitoring and Display Methods	2-143
			A2411 Develop Schedule Display Techniques	
			A2412 Develop Cost Display Techniques	
			A2413 Develop Management Review Methods	
			A2414 Select Monitoring Methods	
		A242	Record Actuals	2-147
			A2421 Track Engineering Releases	
			A2422 Track Purchase Orders	
			A2423 Record Work in Process	
			A2424 Record Costs Expended	
		A243	Evaluate Status	2-149
			A2431 Compare Actuals to Plans	
			A2432 Assess Risks/Alternatives	
			A2433 Develop Work Around Plans	
A3	Plan Production			2-151
	A31	Control Planning		
	A32	Determine Detailed Method of Manufacture		2-155
		A321	Complete Manufacturing Parts List	
		A322	Decide Make/Buy for Each Part	
		A323	Determine Precise Form of Subparts	
	A33	Develop Production Instructions		2-157
		A331	Plan Line Assemblies and Installations	2-159
			A3311 Understand Finished Item Requirement	
			A3312 Determine Assembly or Installation Steps	
			A3313 Detail Assembly or Installation Steps	
			A3314 Apply Times	

Node Index - MFGØ (Continued)

					Page
A332	Plan Batch Assemblies				2-161
	A3321	Understand Finished Assembly Requirements			
	A3322	Determine Assembly Steps			
	A3323	Detail Each Assembly Step			
	A3324	Establish Routing			
	A3325	Determine Time and Costs			
A333	Plan Detail Part				2-163
	A3331	Understand Finished Part Requirements			2-165
		A33311	Understand Geometric Requirements		
		A33312	Understand Tolerance Requirements		
		A33313	Understand Final Material Condition Requirements		
		A33314	Understand Part Finish Requirements		
	A3332	Determine Initial Form of Raw Materials			2-167
		A33321	Determine Optional Materials		
		A33322	Determine Initial Form		
		A33323	Select From Options		
	A3333	Determine Fabrication Steps			2-169
		A33331	Compare Material Form to Finished Part Requirement		
		A33332	Determine Fabrication Operations		
		A33333	Add Inspection Steps		2-171
			A333331	Determine Critical Quality Characteristics	
			A333332	Review Manufacturing Sequence	
			A333333	Identify Test/ Inspection Control Points	

Node Index - MFG0 (Continued)

						Page
					A333334 Select Existing Test/ Inspection/Control Instructions	
					A333335 Determine New Test/ Inspection/Control Instructions	
					A333336 Integrate Instructions With Process Plans	
				A33334 Identify Needed Tools		
				A33335 Determine Necessary Sequence		
			A3334 Detail Each Fabrication Step			2-173
				A33341 Interpret Fabrication Step		
				A33342 Select Specific Machine Type		
				A33343 Determine Setup		2-175
					A333431 Determine Item Setup	
					A333432 Determine Tool Setup	
					A333433 Determine Machine Setup	
				A33344 Specify Tools		
				A33345 Develop Detailed Instructions		
			A3335 Establish Routine			
			A3336 Apply Times			
		A334 Plan for Procured Items				2-177
			A3341 Specify Delivery Configuration of Item			
			A3342 Specify Manufacturing Method			
			A3343 Plan Receiving Inspection			
			A3344 Identify Needed Tools			
	A34 Validate and Release Planning					
A4 Provide Production Resources						2-179
	A41 Provide Facilities					2-183
		A411 Plan Production Facilities				2-185
			A4111 Analyze Production Requirements			2-187
				A41111 Analyze Work Flow		
				A41112 Provide Support Forecasts		
				A41113 Develop Preliminary Specs		
				A41114 Prepare Facility Manpower and Cost Estimates		

Node Index - MFGØ (Continued)

				Page
		A4112	Coordinate Facility Development	2-189
			A41121 Justify and Approve Facilities	
			A41122 Bid and Let Contracts	
			A41123 Interface with Design and Support Groups	
		A4113	Engineer Production Facilities	2-191
			A41131 Provide Final Construction, Machinery Drawings	
			A41132 Lay Out Plant	
			A41133 Order Material and Equipment	
	A412	Build, Modify Facilities		
	A413	Operate, Maintain Facilities		2-193
		A4131	Maintain Plant	
		A4132	Operate and Monitor Utilities	
		A4133	Provide Custodial Services	
		A4134	Handle Waste Treatment	
A42	Provide Equipment			2-195
	A421	Plan Production Equipment		2-197
		A4211	Perform Station Capability Analysis	
		A4212	Analyze Load Capacity	
		A4213	Do Replacement Study	
		A4214	Study Make/Buy Tradeoffs	
		A4215	Estimate Costs	
		A4216	Justify and Approve Equipment	
	A422	Obtain Equipment		2-199
		A4221	Acquire	
		A4222	Design	
		A4223	Build, Modify	
		A4224	Install	
		A4225	Check-Out	
	A423	Control Equipment		2-201
		A4231	Assign	
		A4232	Move	
		A4233	Provide Accounting	
	A424	Maintain Equipment		2-203
		A4241	Do Preventive Maintenance	
		A4242	Do Routing Maintenance	
		A4243	Perform Inspection	
		A4244	Repair Equipment	

Node Index - MFGØ (Continued)

	Page
A43 Provide Tools	2-205
A431 Control Tool Providing	
A432 Design	
A433 Plan Tools (Process Plan)	
A434 Make Tools	
A435 Manage Tool Supply	
A44 Provide People	
A5 Obtain Manufacturing Materials	2-207
A51 Control Procurement of Production Materials	2-211
A511 Determine Total Materials Needs (As a Function of Time)	
A512 Evaluate and Allocate Inventory (On Hand and On Order)	
A513 Plan Material Acquisition	
A514 Issue Requisitions	
A52 Procure	2-213
A521 Determine Source	2-215
A5211 Identify Sources	
A5212 Get Quotes	2-217
A52121 Select Bidders	
A52122 Request Quotations	
A52123 Interact with Bidders	
A52124 Evaluate Quotes	
A5213 Select Source	
A522 Place Orders	
A523 Follow Orders	
A524 Receive	
A525 Close Orders	
A53 Inspect	2-219
A531 Perform Incoming Inspection	2-221
A5311 Receive Incoming Material/ Documentation	
A5312 Assemble Inspection Documentation	
A5313 Inspect Incoming Material	
A5314 Disposition Material	
A5315 Update Inspection History File	
A532 Control Non-Conforming Material	
A533 Rework	
A54 Manage Materials Inventory	
A6 Produce Product	2-223
A61 Control Production Orders	2-227
A611 Apply Schedule	2-229

Node Index - MFGØ (Continued)

			Page
		A6111 Compare Requirements to Stock Position	
		A6112 Perform Breakback Extension and Set Lot Size	
		A6113 Determine Line Assembly Schedule	
		A6114 Determine Feasible Ship Dates	
	A612	Adjust Release Schedule	2-231
		A6121 Forecast Load	
		A6122 Identify Needed Adjustments	
		A6123 Select Orders for Release	
	A613	Release Work Packages	
	A614	Adjust Work Center Load	
	A615	Track Orders in Progress	
A62	Control Production Items and Tools		2-233
	A621	Write Requisitions	
	A622	Store Items and Tools	2-235
		A6221 Verify Count Identify	
		A6222 Prepare for Storage	
		A6223 Determine Storage Location	
		A6224 Put Away	
	A623	Gather Items and Tools	2-237
		A6231 Locate and Pull Material	
		A6232 Organize Materials	
		A6233 Prepare and Ship Spares and Kits	
	A624	Maintain Records	2-239
		A6241 Post Transactions	
		A6242 Verify or Correct Record Counts	
A63	Perform Physical Production		2-241
	A631	Fabricate Detail Parts	2-245
		A6311 Assign Work (Station and Operation)	
		A6312 Setup and Take Down	
		A6313 Perform Fabrication Step	
		A6314 Inspect Part	2-247
		A63141 Inspect Sheet Metal and Extruded Parts	2-249
		A631411 Perform Blanking Inspection	
		A631412 Perform Forming Inspection	
		A631413 Perform Dimensional and Hardness Inspection	

Node Index - MFGØ (Continued)

			Page
		A631414 Perform NDT Inspection	
		A631415 Perform Post Process Detail Part Inspection and Acceptance	
	A63142	Inspect Machined Parts	2-251
		A631421 Perform Premachining Material Verification	
		A631422 Perform NDT Inspection	
		A631423 Perform Dimensional Inspection	
		A631424 Perform Post Processing Inspection and Acceptance	
	A63143	Inspect Composite Parts	2-253
		A631431 Perform Lay-up Inspection	
		A631432 Perform Bagging Inspection	
		A631433 Perform Post Autoclave Inspection	
		A631434 Perform Trim Inspection	
		A631435 Perform NDT Inspection and Acceptance	
A6315	Handle Non-Conforming Materials		2-255
	A63151	Perform Preliminary Review Disposition	2-257
		A631511 Provide Disposition	
		A631512 Provide Work Instructions	
		A631513 Release for Work	
	A63152	Perform MRB Disposition	2-259
		A631521 Obtain Approval From Mfg. and Engineering	
		A631522 Estimate Costs of Non-Conformance	
		A631523 Obtain Customer Approval	
		A631524 Provide Work Instructions	
		A631525 Release for Work	
	A63153	Determine Corrective Action	

Node Index - MFGØ (Continued)

					Page
A632	Assemble Component Parts (Sub-Assembly)				2-261
	A6321	Assign Work (Station and Operation			
	A6322	Setup and Take Down			
	A6323	Perform Assembly Step			
	A6324	Inspect Part			2-263
		A63241	Test Inspect & Evaluate Mechanical Components		
		A63242	Test Inspect & Evaluate Electronic/Electrical (Sub/Assys)		2-265
			A632421	Test/Inspect Cables and Harnesses	2-267
				A6324211 Inspect Cable Assemblies	
				A6324212 Inspect Harness Assemblies	
				A6324213 Verify Cable/ Harness Functional Tests and Test Results	
			A632422	Test/Inspect Printed Wiring Assemblies	2-269
				A6324221 Inspect Part Marking	
				A6324222 Inspect Printed Wiring Board	
				A6324223 Inspect Conformal Coating	
				A6324224 Inspect Wiring	

Node Index - MFGØ (Continued)

				Page
			A6324225 Inspect Solder	
			A6324226 Verify PWA Functional Test and Test Results	
		A632423	Test/Inspect Line Replaceable Units	2-271
			A6324231 Verify Printed Wire Inspection Acceptance	
			A6324232 Assure No Physical Defects	
			A6324233 Inspect Wire Routing	
			A6324234 Verify LRU Functional Test and Test Results	
		A632424	Test/Inspect Completed Electronic Component Parts	2-273
			A6324241 Inspect Chassis Assembly	
			A6324242 Inspect Interface Test Adapters	
			A6324243 Inspect Rack Assembly	
			A6324244 Verify Component Functional Test and Test Results	
	A63243	Verify Software/Module Integration		
A6325	Handle Non-Conforming Assemblies			2-275
	A63251	Perform Preliminary Review Disposition		2-277
		A632511	Provide Disposition	

Node Index - MFGØ (Continued)

				Page
			A632512 Provide Work Instructions	
			A632513 Release for Work	
		A63252	Perform MRB Disposition	2-279
			A632521 Obtain Approval from Mfg. and Engineering	
			A632522 Estimate Costs of Non-Conformance	
			A632523 Obtain Customer Approval	
			A632524 Provide Work Instructions	
			A632525 Release for Work	
		A63253	Determine Corrective Action	
A633	Perform Major Assembly and Installation			2-281
	A6331	Assign Work Crews (Station and Operation)		
	A6332	Setup and Take Down Ancillary Equipment		
	A6333	Perform Assembly or Installation Step		
	A6334	Inspect or Test		2-283
		A63341	Test/Inspect and Evalute Mechanical Installations and Operations	
		A63342	Test/Inspect and Evaluate Electronic Systems Installations and Operations	2-285
			A633421 Verify Electrical Harness Installation Routing	
			A633422 Verify Electrical Harness Functional Tests	
			A633423 Verify Electrical Components Installations Complete	
			A633424 Verify Electrical Components Bonding Checks	
			A633425 Perform System Operations Checks	

Node Index - MFGØ (Continued)

				Page
		A6335	Handle Non-Conforming Assemblies	2-287
		A63351	Perform Preliminary Review Disposition	2-289
			A633511 Provide Disposition	
			A633512 Provide Work Instructions	
			A633513 Release for Work	
		A63352	Perform MRB Disposition	
			A633521 Obtain Approval from Mfg. and Engineering	
			A633522 Estimate Costs of Non-Conformance	
			A633523 Obtain Customer Approval	
			A633524 Provide Work Instructions	
			A633525 Release for Work	
		A63353	Determine Corrective Action	2-291
A64	Test, Checkout			2-293
	A641	Verify Fuel System Functional Check		
	A642	Verify Field Operations and Pre-Engine Run Checks		
	A643	Verify Green Engine Runs		
	A644	Verify Prep for Flight		
	A645	Verify Company and Air Force Flight		
	A646	QC Sign-Off of Aircraft		
A65	Deliver Product			

2.2 Model Diagrams

2.2.1 The Model

The model diagrams, the node index, and the text with the diagram comprise the model. The text and the parent diagrams are shown on the left page and the diagram is shown on the right page of each page pair.

The model starts at diagram A0. page 2-31, other diagrams precede the A0 diagram beginning with A-3 through A-0. These diagrams are higher level diagrams that place the model "Manufacture Product" in the context of Air Force System Acquisition and maintenance.

2.2.2 Reading the Model Diagrams

Activity diagrams are composed of boxes, and arrows that connect the boxes. This section describes the language of boxes and arrows, their connections on a single diagram, and their asembly to make a model.

An activity is anything that can be named with an active verb phrase. This includes everything from the concrete to the conceptual, such as: tighten, attach, measure, assemble, transcribe, evaluate, classify, construct, solve, adapt, resolve, develop.

Activities are shown as boxed.

A model is a series of diagrams like like these in this section. The initial diagram is the most general or abstract description of the whole system. It has a node number of A0. This diagram shows each major activity as a box. The details of every activity (that is, the "insides" of each box) are shown on another diagram.

Each diagram except A0 is the decomposition of a box on a more abstract diagram. At each step, the more abstract diagram is said to be the "parent" of the detailed diagram (See Figure 2.2-1).

The arrows that connect to a box represent real objects or information needed by or produced by the activity. They are each labeled with a noun phrase, written beside the arrow. Arrows represent data, things, or people. These three catogories are referred to here as "data".

The side of the box at which an arrow enters or leaves shows the arrow's role as an input, a control or an output. Incoming arrows (left and top of box) show the data needed to perform the activity. Outgoing arrows (right of box) show the data created when the activity is performed. From left to right (input to output), an activity transforms data. An input is converted by the activity into the output.

A control arrow enters the top of the box. It describes the conditions or circumstances that govern the transformation. In IDEFØ an arrow is a control unless it obviously serves only as input. Every box will have at least one control arrow.

The bottom of a box is reserved to indicate a mechanism, which may be the person or device which carries out the activity.

An arrow connecting the output of one box to the input or control of another box shows a constraint. The box receiving the data is constrained, since the activity cannot be performed until the data is made available by the box that produces it. The arrows entering a box show all the data that is needed for the activity to be performed. Several activities on a single diagram could be performed simultaneously, if the needed constraints have been satisfied.

In activity diagrams, arrows may branch (implying that the same data is needed by more than one activity) or they may join (implying that the same class of data may be produced by more than one activity). It is usually the case that more than one kind of data is needed to do an activity, and that more than one kind of data is produced by an activity. The branches may each represent the same thing, or different things of the same general type. The arrow labels make clear what the arrows are. See Figure 2.2-2 for examples of branches and joins.

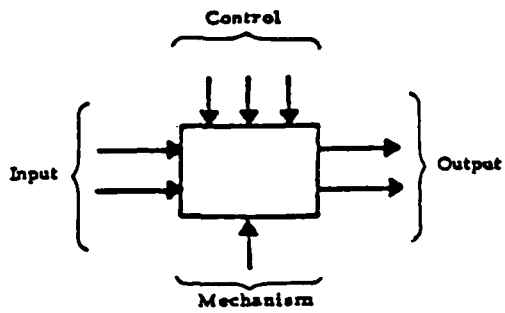

Mechanisms (on the bottom) indicate the means by which the activity is performed. A "mechanism" might be a person or a committee or a machine or a process. The box itself, with its inputs, controls, and outputs, indicates WHAT the system does. The mechanism shows HOW that activity is accomplished.

Mechanism arrows may be the output of other boxes, if those boxes create or prepare processors (device) from their inputs and controls. More often, however, a mechanism model is a separate model.

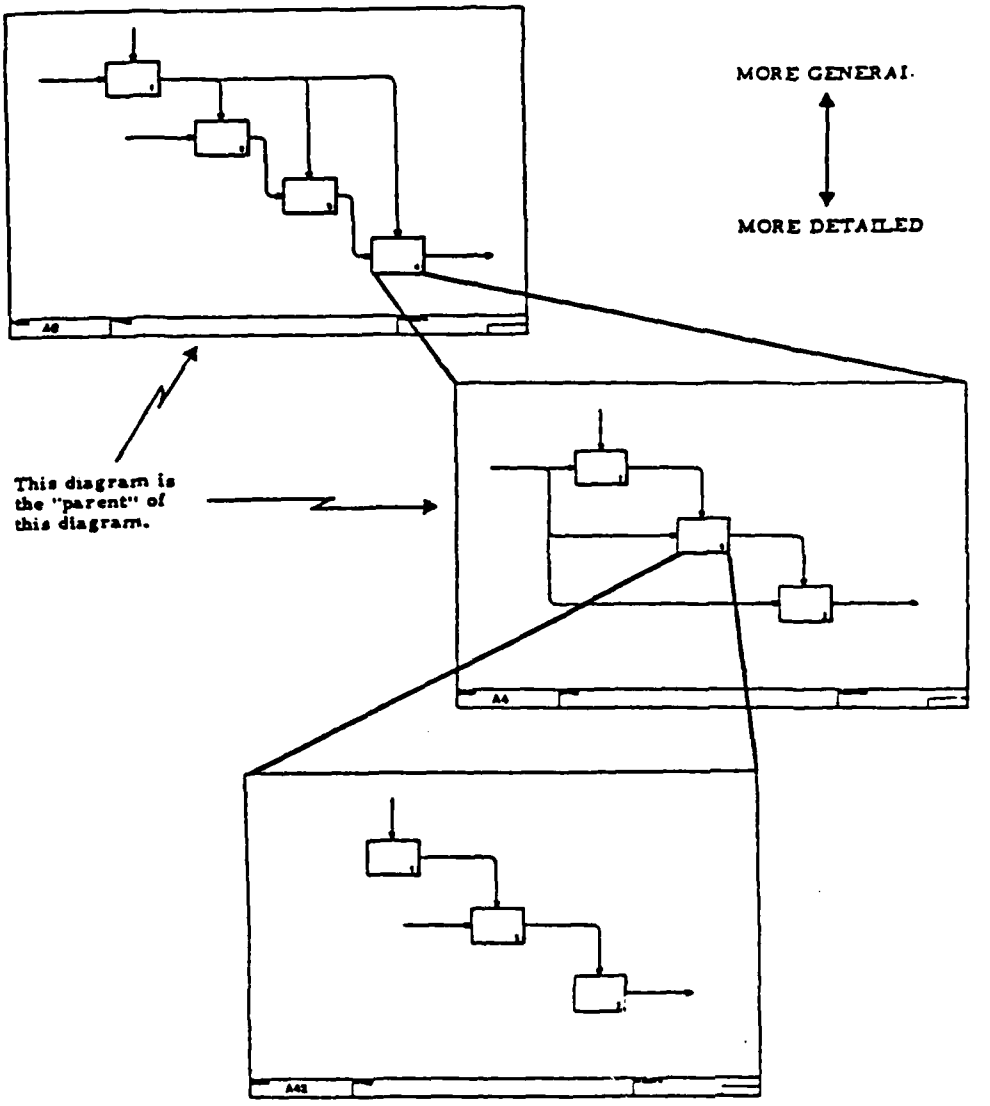

EVERY COMPONENT MAY BE DECOMPOSED IN ANOTHER DIAGRAM.

EVERY DIAGRAM SHOWS THE "INSIDE" OF A BOX ON A HIGHER DIAGRAM.

Figure 2.2-1. Parent to Child Diagram Relation

This branch means that "files" (produced by box 1) are composed of "customer records" (needed by box 2) and "Price and Tax Tables" (needed by box 3).

This join means that "account entries" are created by some from DELIVER PRODUCTS (box 2) and/or some from DO BILLING (box 3).

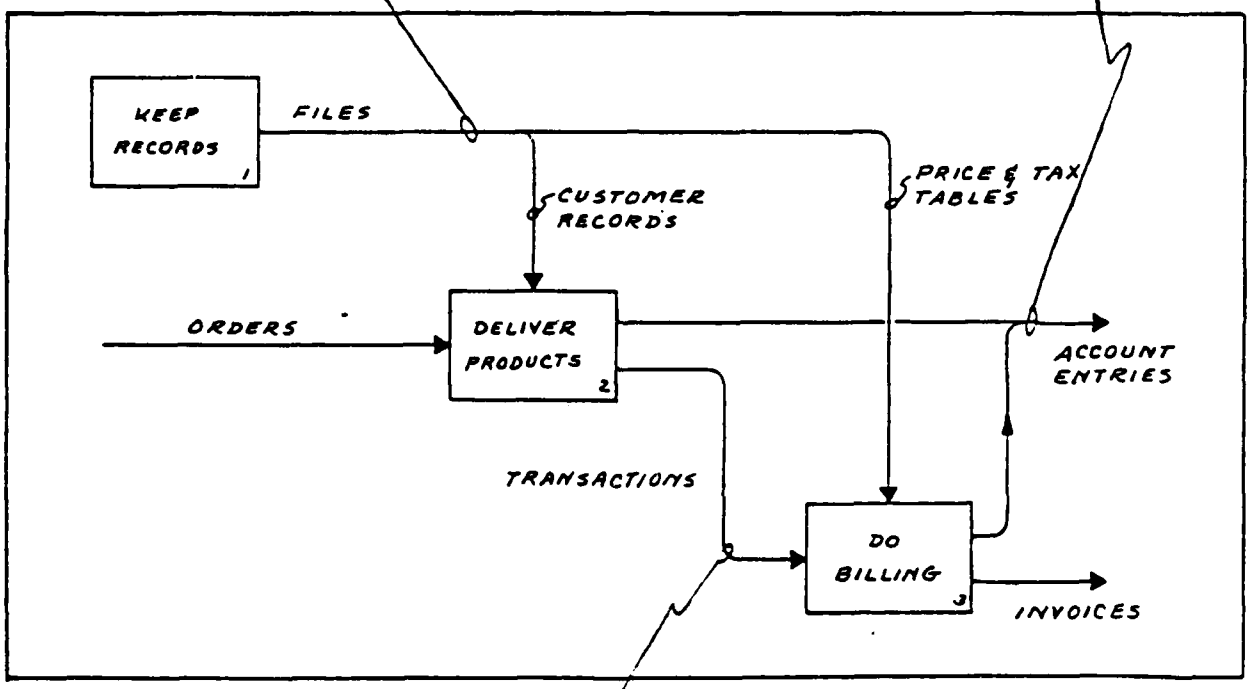

This chain of input and output arrows means that "orders," upon delivery (box 2), are recorded as "transactions," which, when billed (box 3), are reflected on "invoices."

Figure 2.2-2. Arrow Branch and Join Examples

A-3 Get and Use Aerospace Product

The objective is to perceive, understand, and record the architecture of discrete parts manufacturing technology. The work will be performed in the environment and idiom of the aerospace industry. It is believed that the architecture of aerospace manufacturing is so close an approximation of a universal architecture of discrete parts manufacturing that it can be generalized and usefully applied by industry in general.

Although the realm of aerospace manufacturing is reasonably well-defined, it is but one part of the total aerospace industry. It is helpful to view it in this context, so a series of diagrams are presented to locate manufacturing in the larger frame of reference. They should be read in the sequence A-3, A-2, A-1, and A-0. The trail begins with a statement of a need or needs, whether it be a single-engined airplane or a lunar rocket. To meet these needs, resources of many sorts are converted into flight systems. This monolithic view of the activity is called "Get and Use Aerospace Product"; "Use" implies single or repeated flights, at one or various future times.

Glossary

Needs - Objectives and assignments which are to be accomplished. (In the case of the Air Force, those military objectives which are in the national interest.)

Results - The transformation of the resources, accomplished by obtaining and using an aerospace product.

Resources - All of those things which are available to be used in satisfying the need; for example, money, men, material, equipment, technology, and knowledge. In short, anything that is available to be used.

PUBLICATION

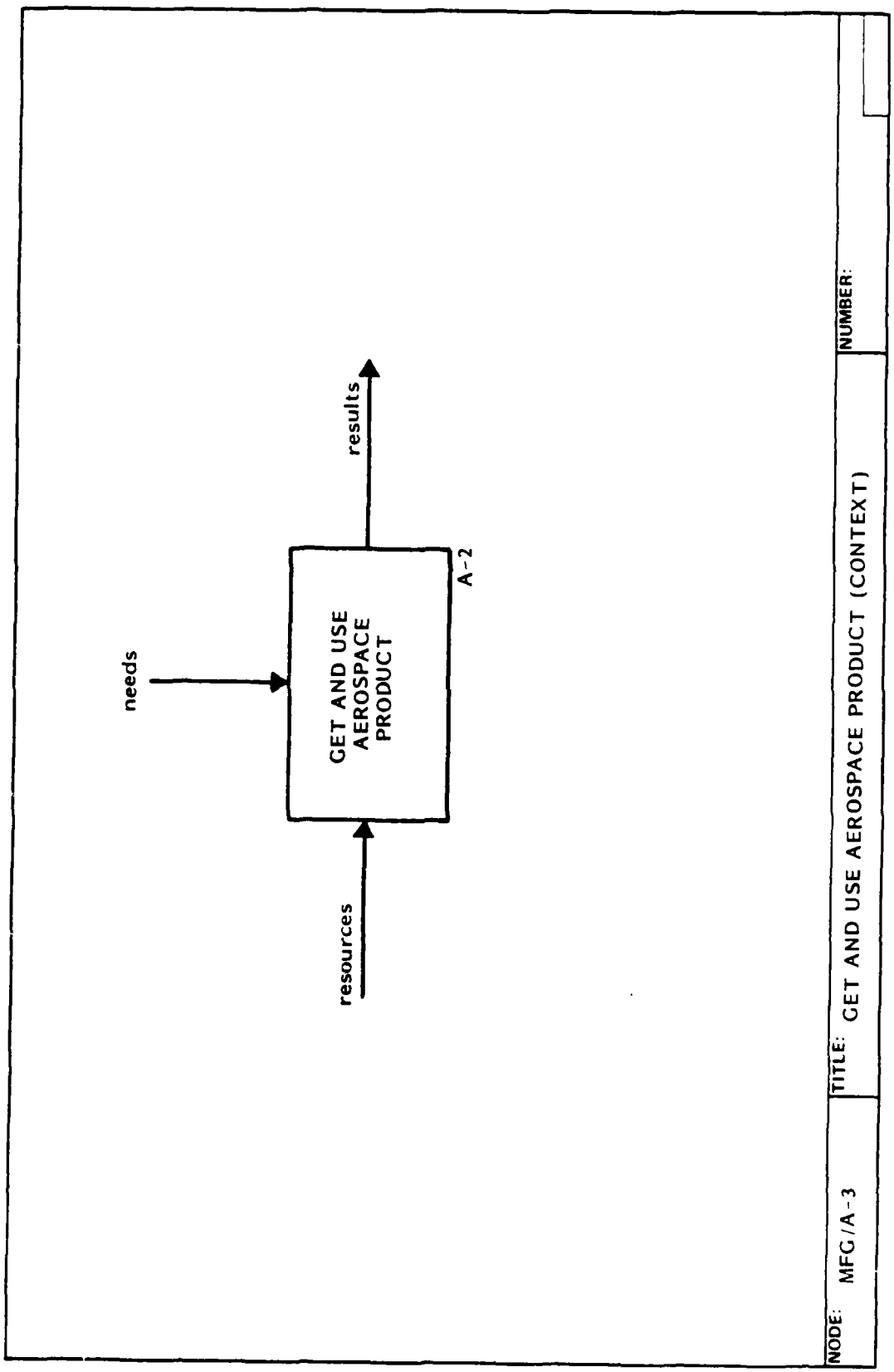

A-2 Get and Use Aerospace Product

Diagram A-2 portrays the four major activities to be found within Diagram A-3. Beginning with the broad statement of needs, a plan is created to fulfill these needs within the constraints of known technology, time, and resources availability. This plan creation is done by the Air Force, with the assistance of the contractor. The output is contracts and systems requirements.

The next activity is the development (from scratch, or from a previous system) of the product -- its perfection, testing, design and production in the desired quantities. This activity would be done by an aerospace manufacturer, consuming raw materials, components, time, and energy, and outputting the desired products, plus spare parts, support equipment, etc.

The third activity is the use of the product systems, by the Air Force, the airlines, NASA, etc. The end result is the fulfillment of the needs as originally stated.

The fourth activity recognizes that, if the product systems are to remain in use, facilities must be provided for maintenance and repair.

PUBLICATION

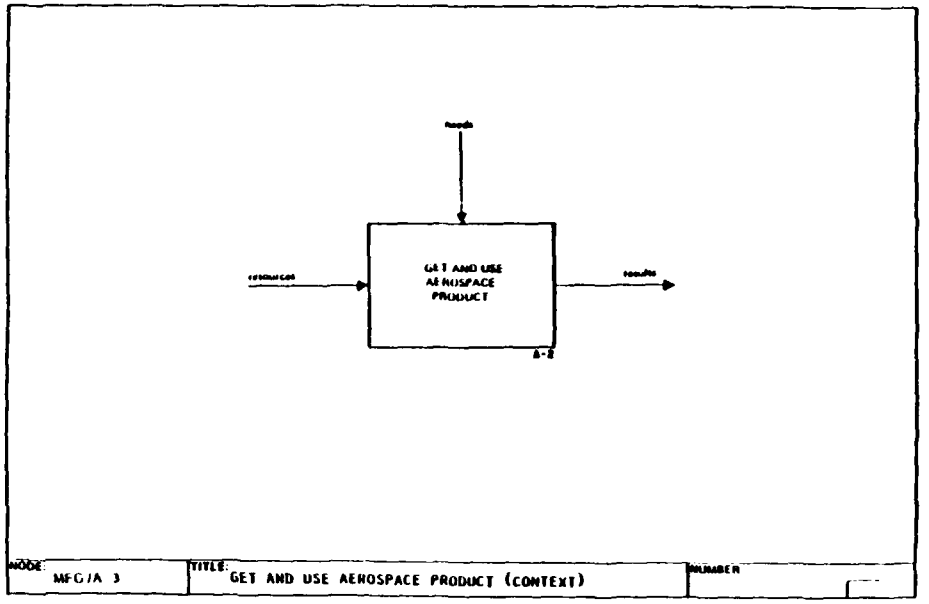

Activities three and and four may feed back requests for product design modifications, and activities two, three, and four may feed back reports which affect the original plan and its continuance.

Note that all four activities go in parallel much of the time.

Glossary

Develop and Produce - Manage, design, manufacture, and support the product.

Instructions - Documentation for using, maintaining, reworking, or rebuilding the product.

Product - The item delivered to the customer for use (as in the case of the Air Force, the airplane, missile, etc.).

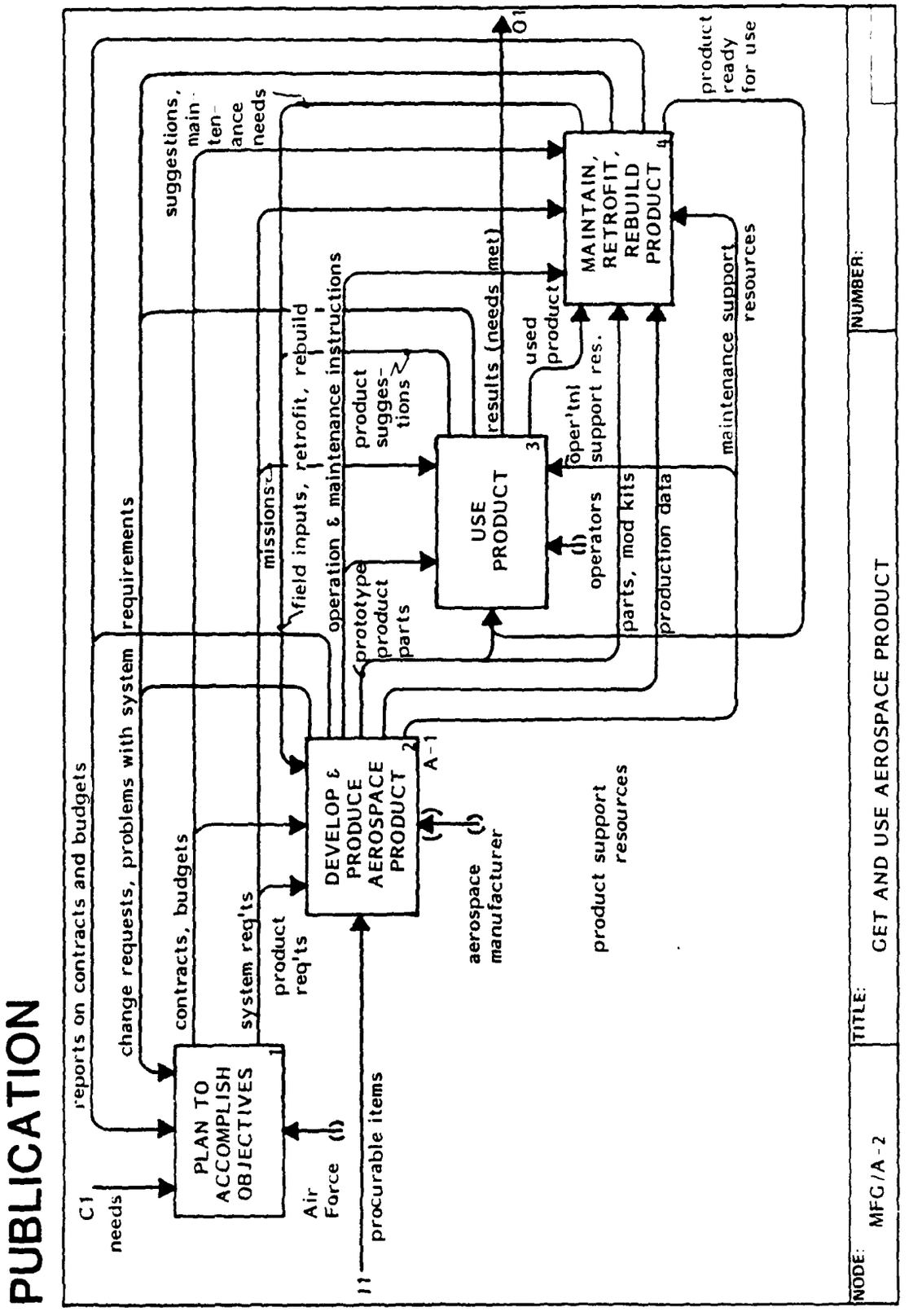
PUBLICATION
C1 needs
PLAN TO ACCOMPLISH OBJECTIVES
1
Air Force
procurable items
reports on contracts and budgets
change requests, problems with system requirements
contracts, budgets
system req'ts
product req'ts
DEVELOP & PRODUCE AEROSPACE PRODUCT
2
A-1
aerospace manufacturer
product support resources
missions
field inputs, retrofit, rebuild
operation & maintenance instructions
prototype product parts
product sugges-tions
USE PRODUCT
3
operators
parts, mod kits
production data
oper'tnl support res.
maintenance support resources
results (needs met)
used product
suggestions, main-ten-ance needs
MAINTAIN, RETROFIT, REBUILD PRODUCT
4
product ready for use
O1
NODE:
MFG/A-2
TITLE:
GET AND USE AEROSPACE PRODUCT
NUMBER:

A-2 Glossary (con't)

Parts and Mod Kits - Products which are supplied for the maintenance or upgrading of the product. They may be supplied in advance by logistics planning or in response to specific maintenance needs.

Field Inputs - Suggestions for improvements in the product or documentation arising from its use or maintenance. Also includes needs for parts or materials for maintenance.

Production Data - Detailed description of each specific serial number of the product, change levels, serial number of the components which it contains, etc. It describes exactly what this particular instance of the product is. It does not include how to use it or how to repair it. It may include the bill of material with change level of each part for this serial number of the product.

Product Support Resources - The facilities, equipment, and tools necessary to support the use and maintenance of the product.

Operational Support Resources - The facilities and equipment for normal use and storage of the product.

Maintenance Support Resources - The facilities, ground support equipment, and special tools required for the maintenance (or even retrofitting or rebuilding) of the product. May also include maintenance personnel.

Used Product - A product after a period of use which needs some kind of major damage, needs rebuilding; or, in the case of a changed mission, or a product improvement, needs retrofitting.)

Product Ready for Use - That result of maintenance, retrofit or rebuild which is prepared to be used again.

System Requirements - The total requirements for the product and its use and maintenance.

Product Requirements - The capabilities and functions, performance specifications, as well as the production needs for the product.

Missions (or Mission Assignments) - The specifications for the use of the product.

Readiness Requirements - Those which are necessary to keep the product ready for its anticipated usages. Quantitative specifications of preparedness for use. Includes not only where the product is to be, but what it is able to do.

Change Requests and Problems - Related to product requirements, readiness requirements and the mission assignments. These change requests and problems come from the

A-2 Glossary (con't)

developer, user, or the maintainer of the product and relate to product improvements.

Contracts and Budgets - That information which directs a manufacturer to do his job.

Reports - Reports of satisfaction of (or problems in satisfying) the contracts.

Procurable Items - Those things which can be obtained by purchase, subcontract, interdivision transfer, or can be furnished by the customer. Includes people, facilities, and equipment which can be hired as well.

A-1 Develop and Produce Aerospace Product

Diagram A-1 expands on the activities included in the second box of A-2, entitled, "Develop and Produce Aerospace Product". "Product" here means the aerospace product and all the supporting systems. Such massive undertakings clearly require a managerial function, continuing throughout the life cycle of the product, and reaching into every level of the activity. This pervasive function involves both receipt of reports and the dispatch of directives.

The conception of product, its refinement, test, and final design is a function which is accomplished once for a given product, and ends when the design is released to manufacture. However, in the real world there are always changes required, and the Design function continues to be responsible for them.

Manufacturing a product is usually a repetitive function, continuing substantially throughout the product's life cycle. It receives the design (drawings, specifications, models, etc.) from Design, and outputs the products, spare and repair parts, and technical data on each instance (each serial number) of the product. It also may build prototypes for Design. It is this activity on which the rest of our effort is focused.

Finally, provision must be made for field support of the product. The design is reviewed in the light of the support requirements, and modifications necessary for logistics considerations are recommended. Needed parts are identified based both on the support requirements and maintenance needs reported from the field support information (operation and maintenance manuals) and resources (facilities, ground support equipment, tools, etc.)

PUBLICATION

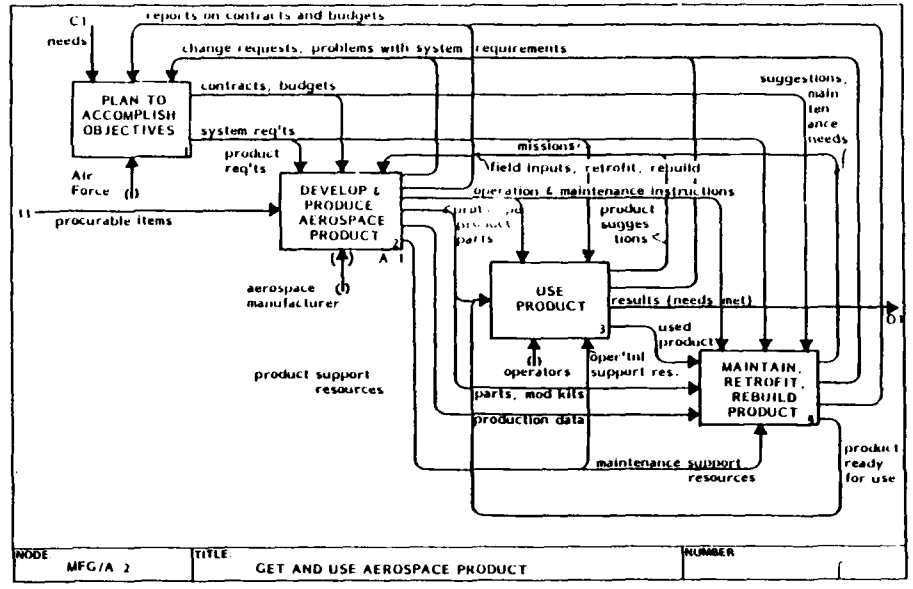

Glossary

Product Support Resources
- See A-2 Glossary.

PUBLICATION

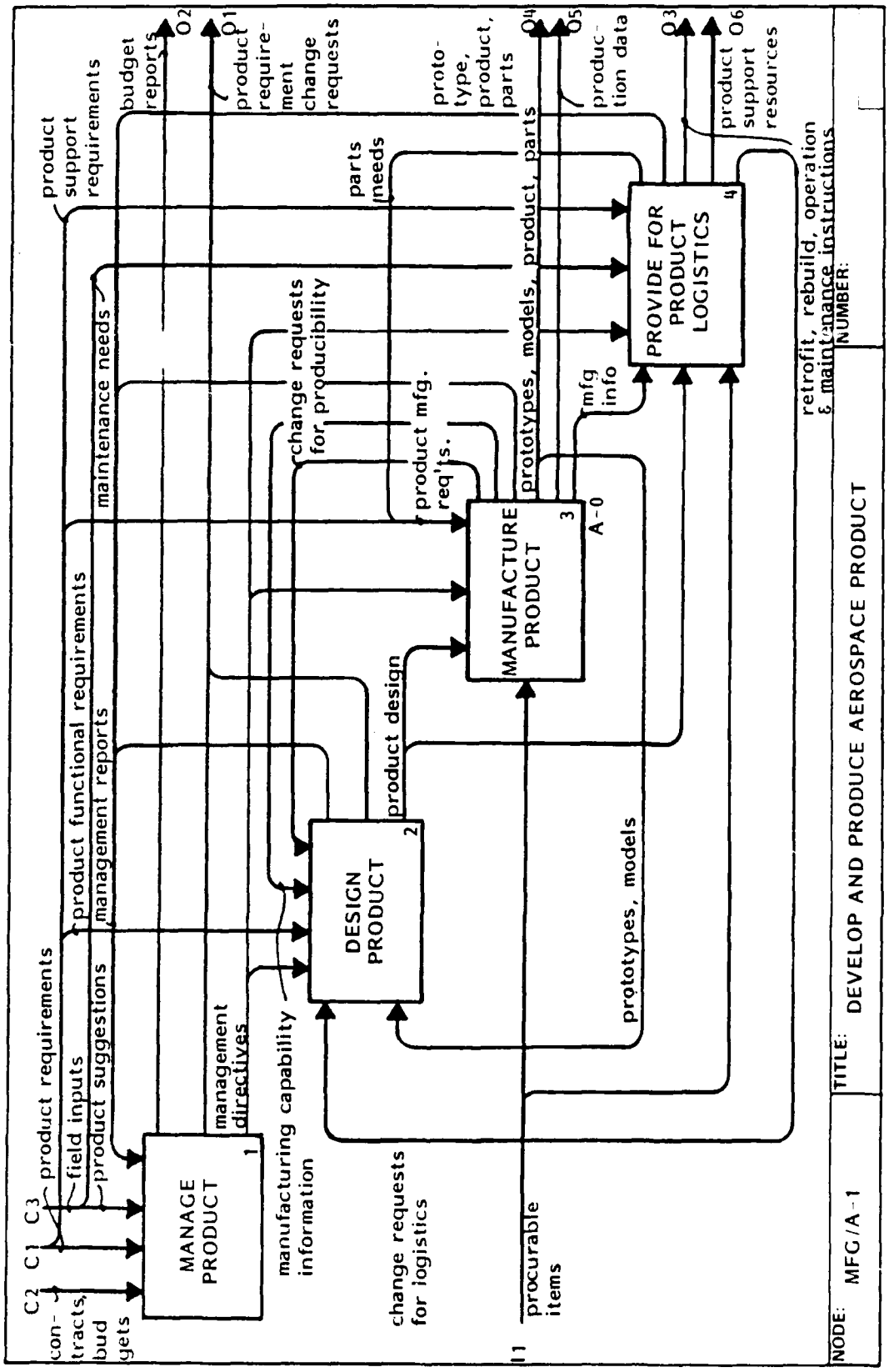

A-1 Glossary (con't)

Contract and Budgets - See A-2 Glossary.

Reports - See A-2 Glossary.

Change Request - May include unsolicited proposals for major changes to the product as well as requests to make minor changes in the specification of the product.

Design Product - Is an activity which occurs basically once; but of course, as there are changes to the design, some amount of redesign does occur.

Manufacture and Product - Is the activity in which procurable items are modified and assembled to form a product. It essentially occurs once for each instance of the product which is del ered and is, therefore, a con nuing operation.

Product Design - The design of the product produced by product engineering.

Change Request - Those requests from manufacturing or logistics which require alterations to the design of the product. The reason for the change request from manufacturing is to enhance producibility or to make possible producibility. The reason for the change request from logistics is to enhance or make possible the maintenance of the product. "Enhance" means make faster, cheaper, or better.

Product Requirements - See A-2 Glossary.

Product Functional Requirements - Functional capabilities performance specifications, etc.

Product Manufacturing Requirements - Includes the quantity and delivery schedule of production and the constraints on sources of components (such as Government furnished equipment, or subcontracted items).

Product Support Requirements - The frequency, location, and extent of maintenance required for the product.

Parts Needs - The number and schedule of individual parts to be made for spare and repair. Support requirements specify the predictable part needs for the product.

Maintenance Needs - Those needs based on field experience, of parts for spare and repair of the product.

Manufacturing Capability Information - The information that serves as a primary control on design by advising them at an early stage of what it is feasible to manufacture. It includes the availability of facilities, equipment, and people. The availability or accessability of materials, etc.

Manufacturing Information - Includes tools and fixture information, assembly and disassembly information, and test result information, which may be useful in determining how to support the product.

A-0 Manufacture Product (Context)

Diagram A-0 is simply Box 3 of Diagram A-1, separated from all the rest of that diagram to emphasize its inputs, controls, and outputs. The monolithic content of this activity is expanded and expounded in the next diagram, A-0.

We might look upon A-0 as the trunk of a tree, and all the succeeding diagrams as its branches, unfolding to display the detailed complexity of aerospace manufacturing. The preceding diagrams (A-3, A-2, A-1) are the roots of the tree, establishing the complex environment in which manufacturing resides.

The primary input is "Procureable Items" - the things that are bought or given to the manufacturer (e.g., sheet metal or engines), to be incorporated in the output or used in its manufacture (drills). Implicit also is the sum total of previous knowledge which will be used in decision making.

The primary control is the product design, and the primary outputs are the product itself, support systems, parts and prototypes.

Other controls are the manufacturing requirements set forth

PUBLICATION

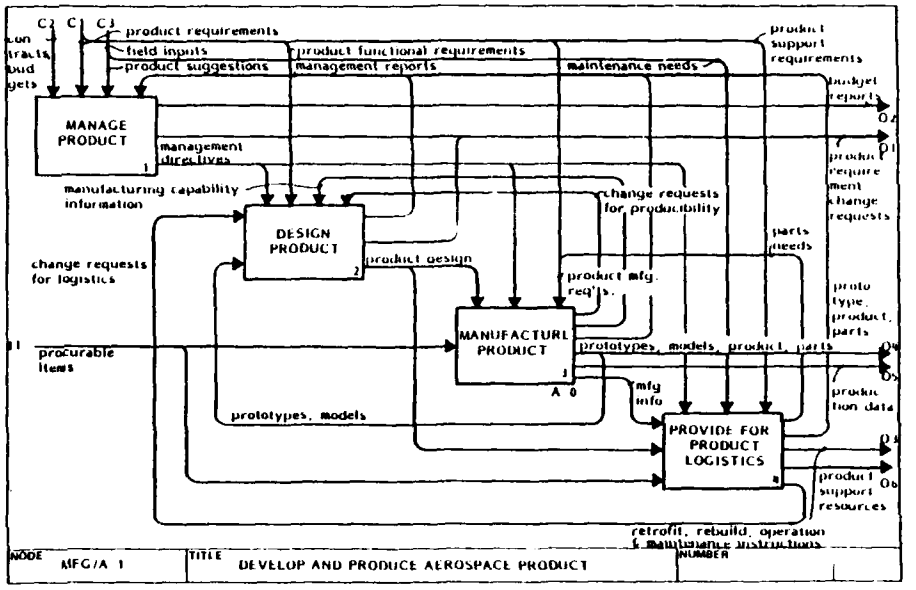

in the original plan (see Diagram A-2), and the management directives. To unclutter the subsequent diagrams, the "Directives" arrows are not drawn, but must be understood to be present. The parentheses at the arrow head show this implicit existence.

The primary output is the product and other manufactured items (parts, kits, prototypes). Other outputs are information useful to planning, field support, and design. "Management reports" like "Directives" are shown with parentheses to simplify lower diagrams.

PUBLICATION

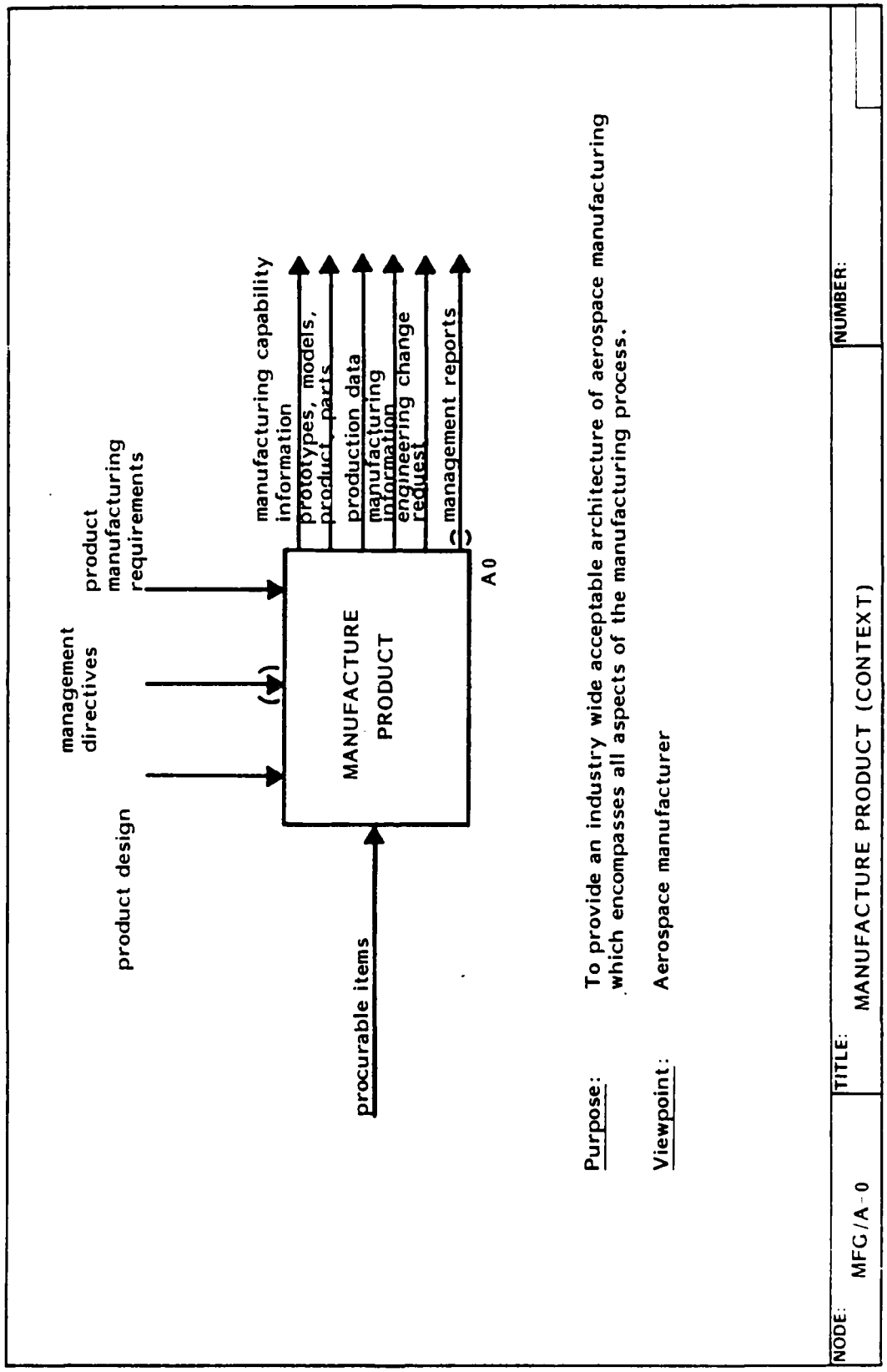

A0 Manufacture Product

A0 is the source diagram from which all subsequent diagrams in the architecture of aerospace manufacturing arise. It has the same inputs, controls, and outputs as does the one-block Diagram A-0.

There are two "planning" activities shown on A0; Box 1 "Plan for Manufacture" and Box 3 "Plan Production". The first relates to the strategy of producing the total product - the major subdivision of the vehicle structure, the basic method of manufacture, and the trade-offs to optimize facilities requirements, cost, and time schedules. The second relates to the strategy of producing the individual parts - the route sheets, operation sheets, and the list of machine tools, forms and cutters, fixtures and gauges required.

There are two "provisioning" activities shown on A0; Box 4 "Provide Production Resources" - facilities, equipment, tools, and people; and Box 5 "Obtain Manufacturing Materials" - those items which will ultimately be included in the delivered product.

There is an administrative activity; Box 2 "Make and Administer

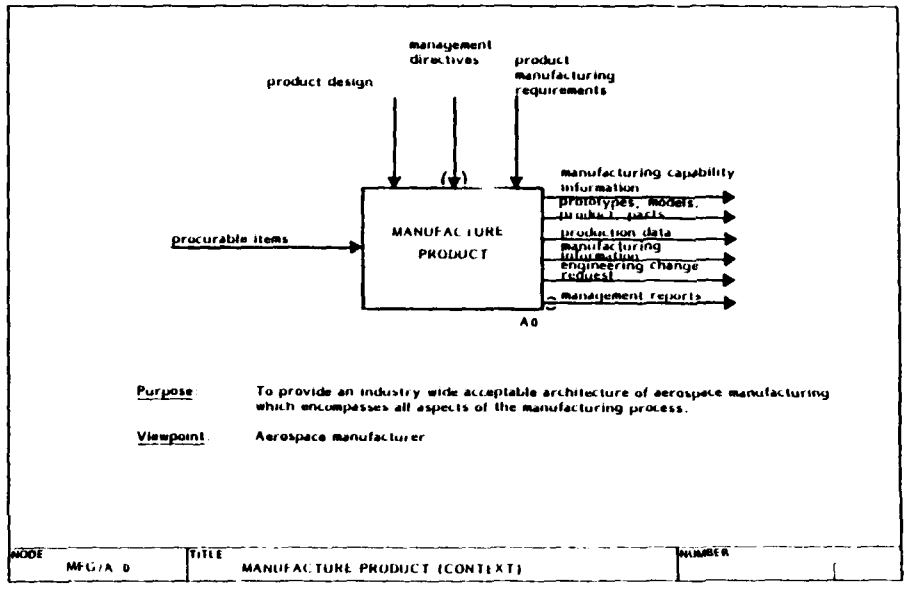

Schedules and Budgets". This activity produces those schedules and budgets which provide proper coordination between the separate activities of Boxes 3, 4, 5, and 6.

Finally there is "Produce Product". This is where the form and character of materials are altered and the pieces assembled. Because of the complexity of this diagram, four diagrams follow, each extracts and explains one flow of information or materials through those six activities.

NOTE: The four following diagrams, A0F1, A0F2, A0F3, and A0F4 present simplified versions which emphasize various aspects of this A0 diagram. The same activity boxes appear on all four diagrams. When the four are combined, the data arrows will be found to be

PUBLICATION

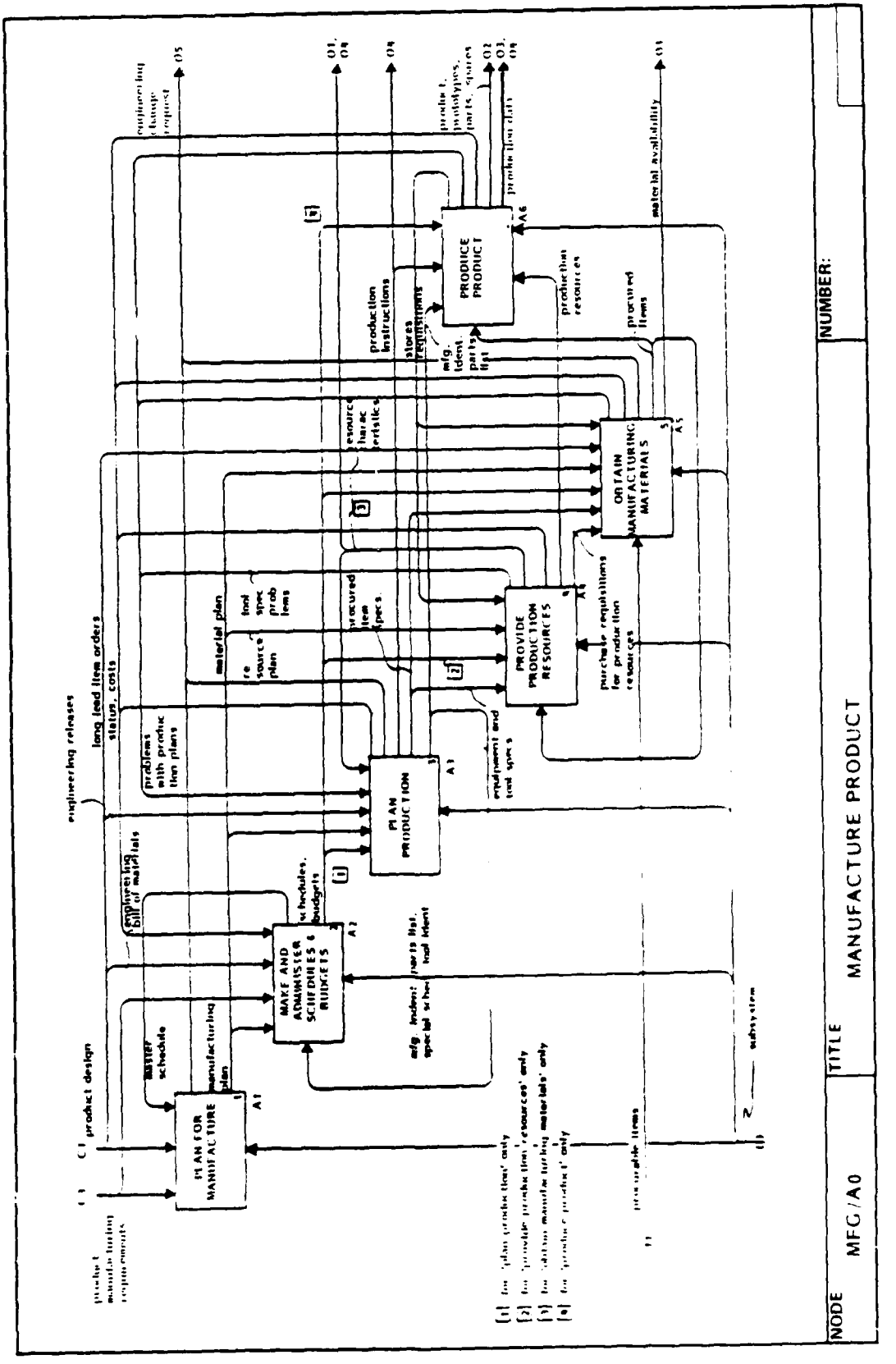

A0 Manufacture Product (con't)

approximately equivalent to those on A0.

Glossary

Product Design - Includes both preliminary and final engineering design. The preliminary engineering design as well as the final is available to Box 1. The engineering release itself and change orders are used for Box 3 planning production. The Engineering Design also includes identification of long lead items for which early procurement is required.

Product Manufacturing Requirements - Includes the date and rate of delivery requirements as well as requirements on how to obtain things. The dates of delivery are needed for schedules or budgets and the other requirements are used for the manufacturing plan (Box 1).

Manufacturing Plans - These are overview plans which include flow sequence plans, item and station charts, item indentures, facilities and equipment requirements, manpower requirements, tooling requirements, material requirements, etc.

Material Plan - A plan for acquisition of all of the different things that must be procured to go into the product, including general principles as well as specific items.

Schedules - Those phasing of production plans, resources, materials, and production itself. These schedules accomplish the coordination of Boxes 3, 4, 5, and 6 and allow them to operate essentially independently. The schedules typically include start and completion dates for major items dealt with by each subfunction.

Budgets - The allocations of funds for each of the major sub-activities.

Special Schedule Requirements - Most items are scheduled according to standard flow times. Any deviation from that is a special schedule requirement.

Special Tool Identification - The identification of tools that are needed and the part for which they are needed.

Manufacturing Indentured Parts Lists - The completion or extension of the manufacturing parts list as produced by production planning. It is primarily needed for scheduling purposes (among other).

Resource Characteristics - The characteristics and capabilities of the facilities, the equipment, people which are available or specially obtained for this product.

Production Instructions - The detailed description of the operations and processes that must be carried out to produce

A0 Glossary (con't)

any given item, including the routing in which they are to be carried out.

Procured Item Specification - Detailed specification of any item which is to be obtained from outside of the company.

Tools Specification - The detailed specification of a tool (which must be procured or fabricated) to be used in producing the product.

Purchase Requisition (as shown in Box 4-5) - Are requisitions to obtain items to be used in making of facilities, equipment or tools.

Stores Requisitions (from Produce Product) - Are the requisitions (1) for materials obtained to be used in making the product or of resources particularly requisitioned or (2) for tools for making the product. These are requisitions for the item to be supplied as opposed to being obtained.

Manufacturing - The conversion of a design into a finished product. Manufacturing then includes planning, scheduling, and getting whatever necessary for the actual making of the product.

Production - The actual making, the physical act of doing what is necessary to make the product. Includes altering the form of materials, assembling, and testing.

AOF1 Manufacture Product: Production Methods and Instructions

Production methods and instructions are derived and used as follows:

The control C1 - Engineering Design is delivered to Box 1 for determining the overall strategy for product manufacture. For example, what will the major subassemblies be (breakpoints)?; will it be a moving assembly line or fixed point assembly?

The Engineering Design is also delivered to Box 3 which also receives the output of Box 1. The individual parts can now be given their preferred manufacturing method.

Output of Box 3 are the packets of detailed instructions which tell the shop (Box 6) exactly how to make each item, and how to assembly them.

Engineering Change Orders enter through Box 3 and are forwarded to the shop as modified instructions.

PUBLICATION

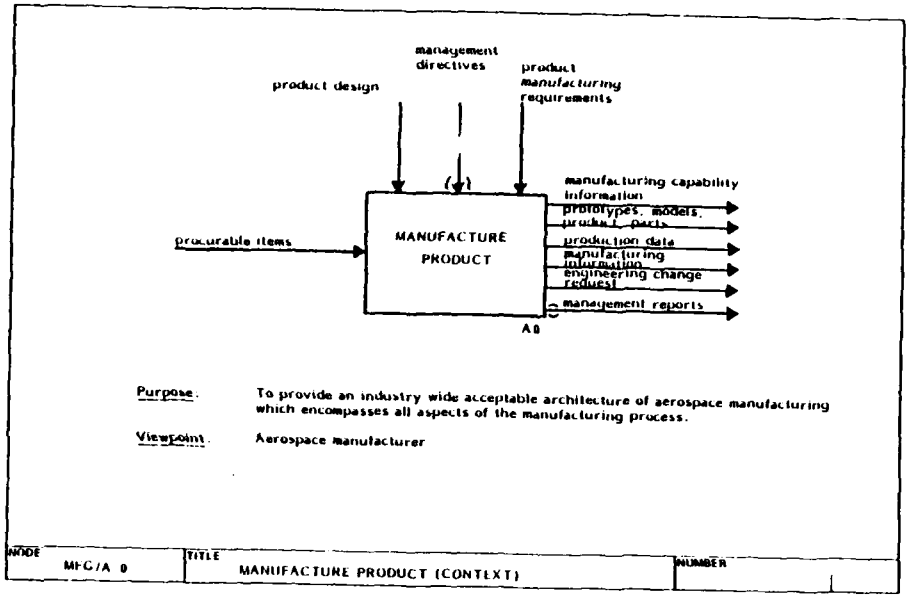

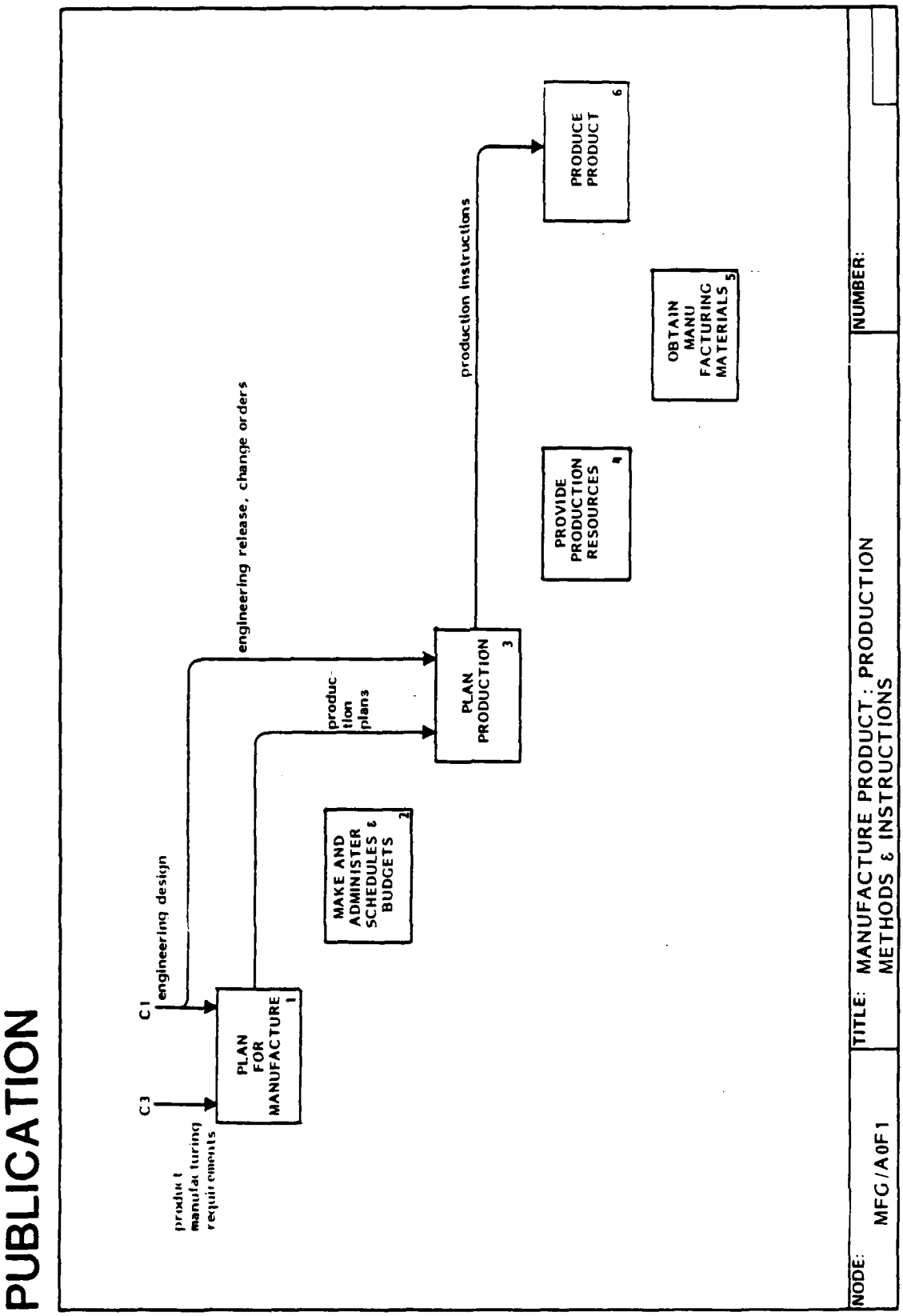
PUBLICATION
C1
engineering design
C3
product manufacturing requirements
PLAN FOR MANUFACTURE 1
MAKE AND ADMINISTER SCHEDULES & BUDGETS 2
production plans
engineering release, change orders
PLAN PRODUCTION 3
production instructions
PROVIDE PRODUCTION RESOURCES 4
OBTAIN MANU FACTURING MATERIALS 5
PRODUCE PRODUCT 6
NODE:
MFG/A0F1
TITLE:
MANUFACTURE PRODUCT: PRODUCTION METHODS & INSTRUCTIONS
NUMBER:

AOF2 Manufacture Product: Production Materials

Production Materials are specified and procured as follows:

Box 1 may, in selecting its ground strategy, make decisions which affect the material specs, or the make/buy option for the component. Box 3 completes the make/by decisions as lower level components are reached, and specifies the precise form and condition of each procured item. This information must be passed on to Box 5.

Box 5 aggregates the various material purchases, component purchases, and parts to be purchased from subcontractors, and relates these requirements to the production sequence (as shown in the material schedule, see AOF4). Box 5 also procures the various necessary items and dispenses them to the shop floor, based either upon schedule or upon requisition.

Raw materials (sheet, rod, bar, tubing, etc.) are warehoused by Box 5. Outside manufactured parts and components are also warehoused here, or optionally in Box 6. Finished but unassembled parts are warehoused in Box 6.

PUBLICATION

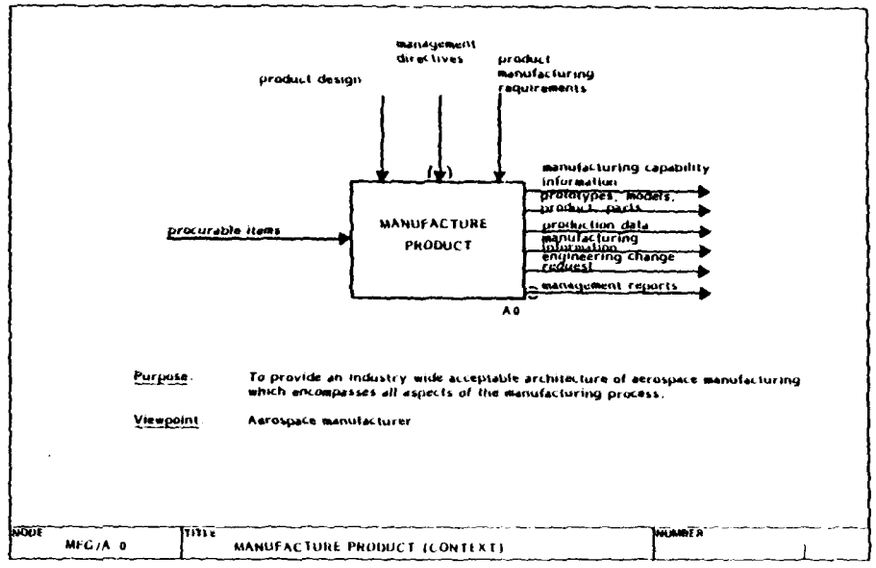

"Long Lead Items" requisitions from the Design department to Box 5 is more common in aerospace manufacturing than in other industrial environments.

PUBLICATION

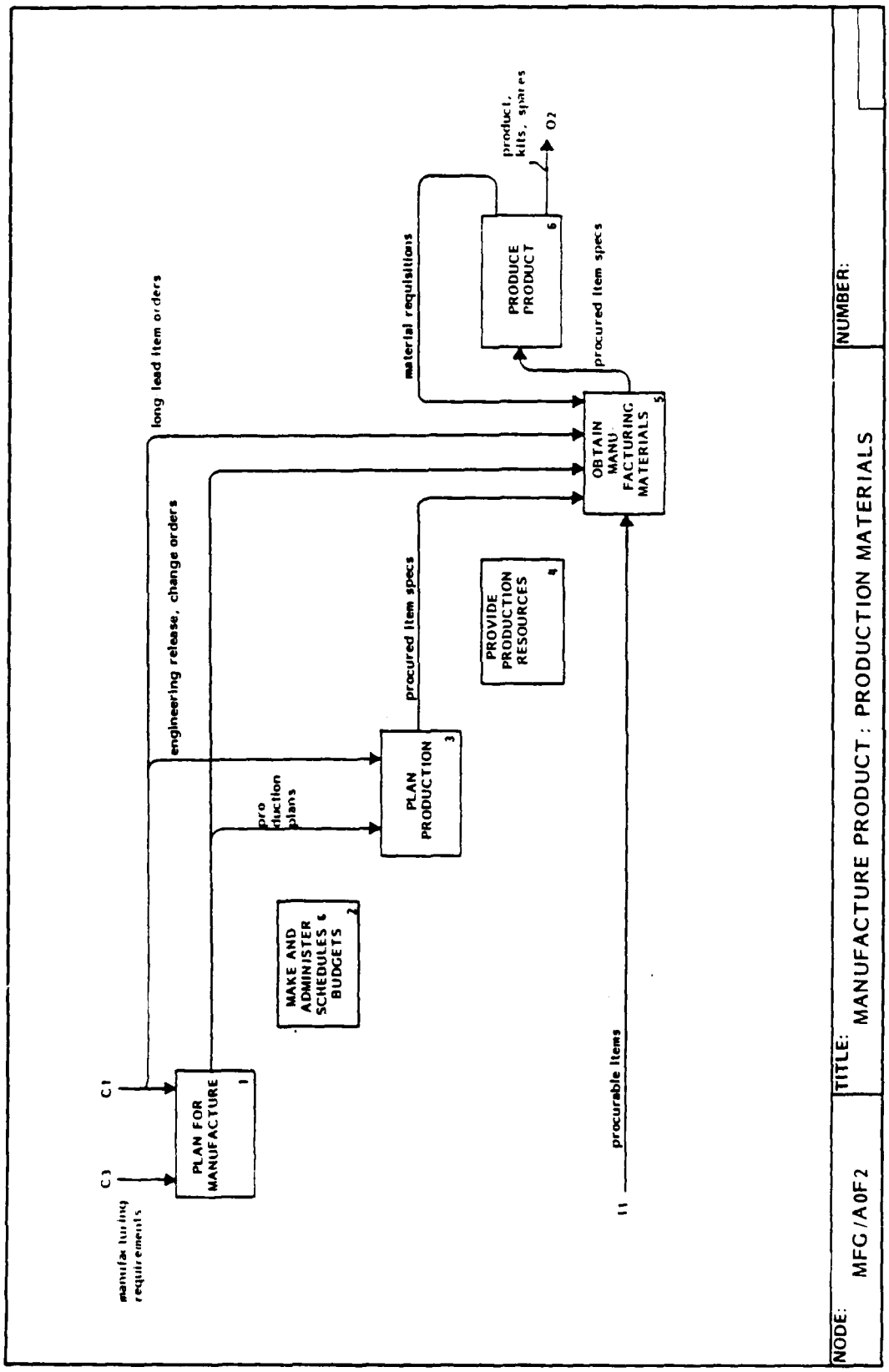

PUBLICATION

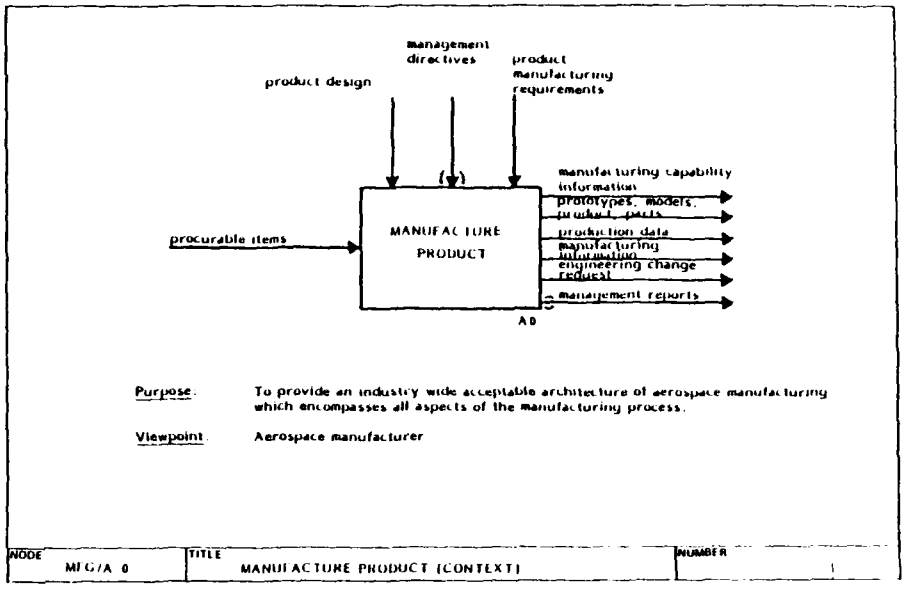

AOF3 Manufacture Product: Production Resources

Production resources include facilities (buildings, e.g.), equipment (press brakes, e.g.), tools (cutters, gauges, hand tools, e.g.) and skilled personnel. The needs thereof are identified and satisfied as follows:

The gross requirements are estimated by Box 1, based upon its manufacturing plan. More specific requirements including the specifications of expendable and fixed tools, etc. are supplied by Box 3, having due regard to available resources reported from Box 4.

Box 4 is the focal point for the provision of production resources.

- Facilities and equipment are long lead time items, acquired in accordance with the manufacturing plan and assigned to the production Box 6.
- Personnel usually may be enrolled in less time; a special activity hires, trains, and monitors the people who are assigned to the production Box 6.
- Some tools may be bought in the market in response to a requisition to Box 5. Other tools have to be designed and built from materials bought in the market place, via Box 5. Tools are issued to Production Box 6 in a timely manner indicated by the Manufacturing Plan, or upon requisition (e.g. to replace broken or dulled tools).

Note that the resources covered by this diagram do not become part of the ultimate product shipped out to the user.

PUBLICATION

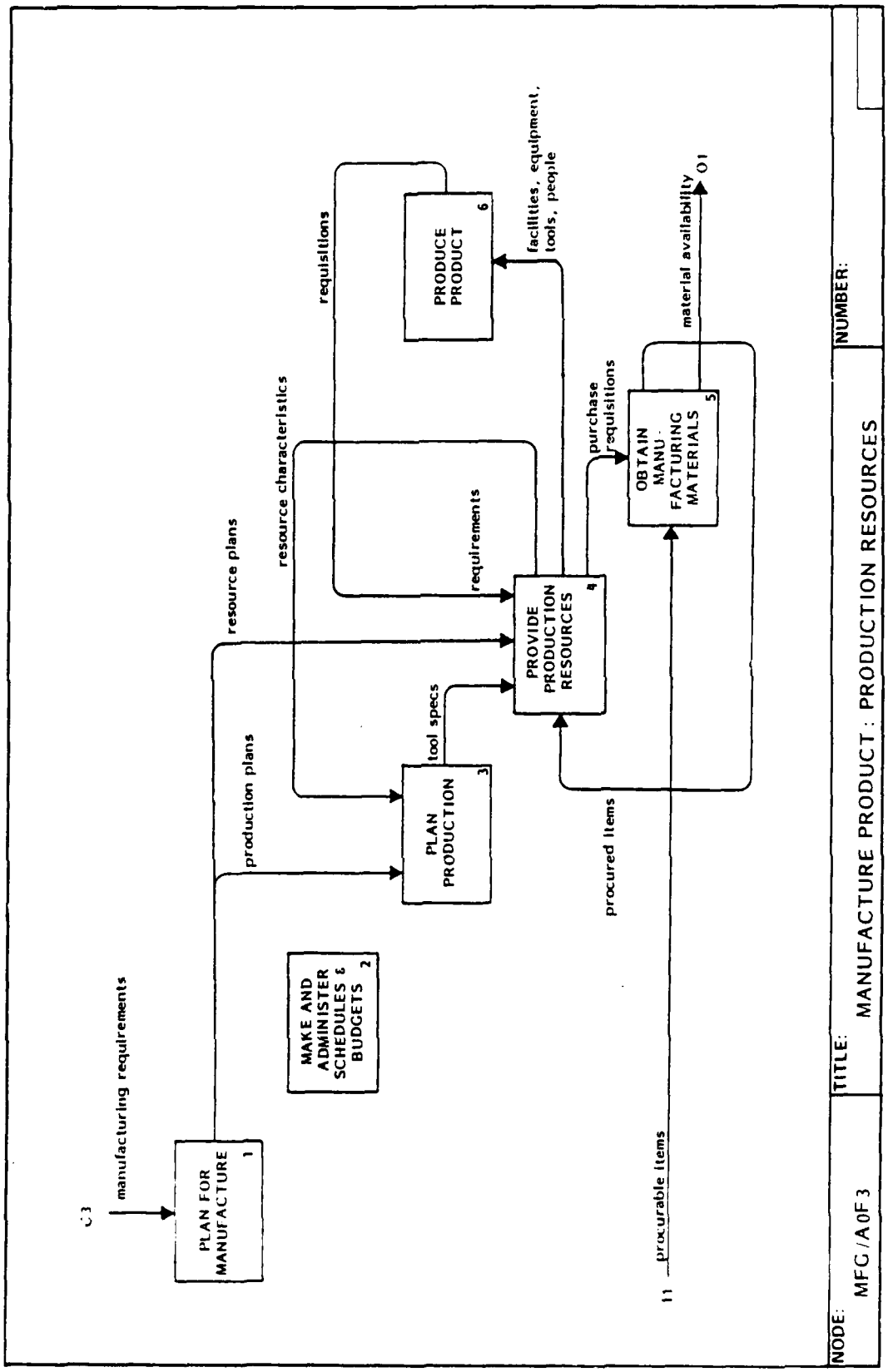

PUBLICATION

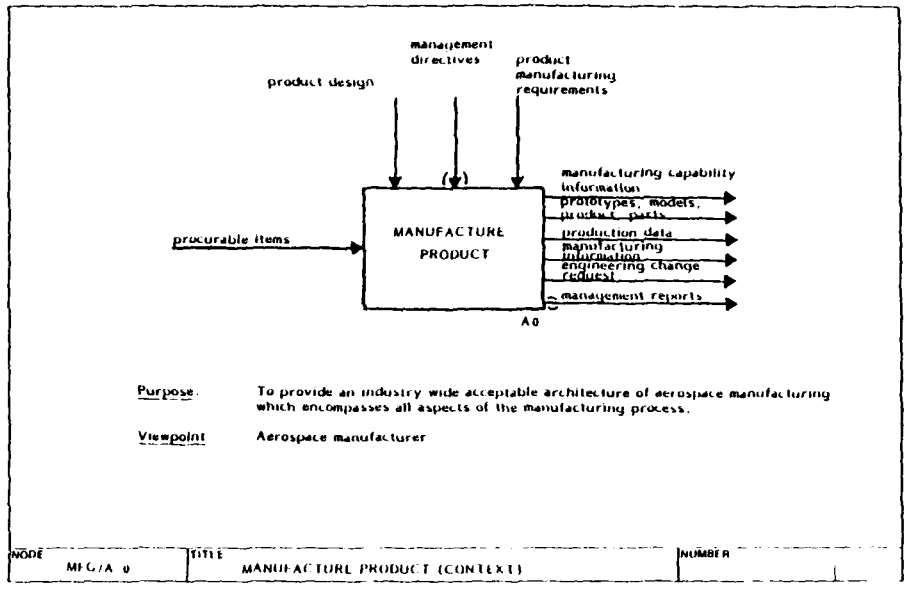

A0F4 Manufacture Product: Schedules and Budgets

Schedules and budgets are made and administered by Box 2 in accordance with the manufacturing plan; they are communicated to and monitored in the subsequent activities, Boxes 3, 4, 5, and 6.

In aerospace environments it is necessary to perform a broad-brush manufacturing plan, then make an initial schedule and cost estimate, followed by a production plan which expands the bill of materials and permits more accurate schedules and budgets to be prepared. The return loop from Box 3, shown as an input to Box 2, transmits among other things the final, expanded, indentured Bill of Materials for this purpose.

In other environments the Product Design activity provides the complete Bill of Materials in the Design release.

Box 2 also receives schedule and budget actuals, which it matches to plans, and may adjust priorities or schedule to correct for developing discrepancies. It reports progress of both work accomplishments and resource expenditure, and may issue alerts or warnings if contractural limits appear to be in jeopardy.

PUBLICATION

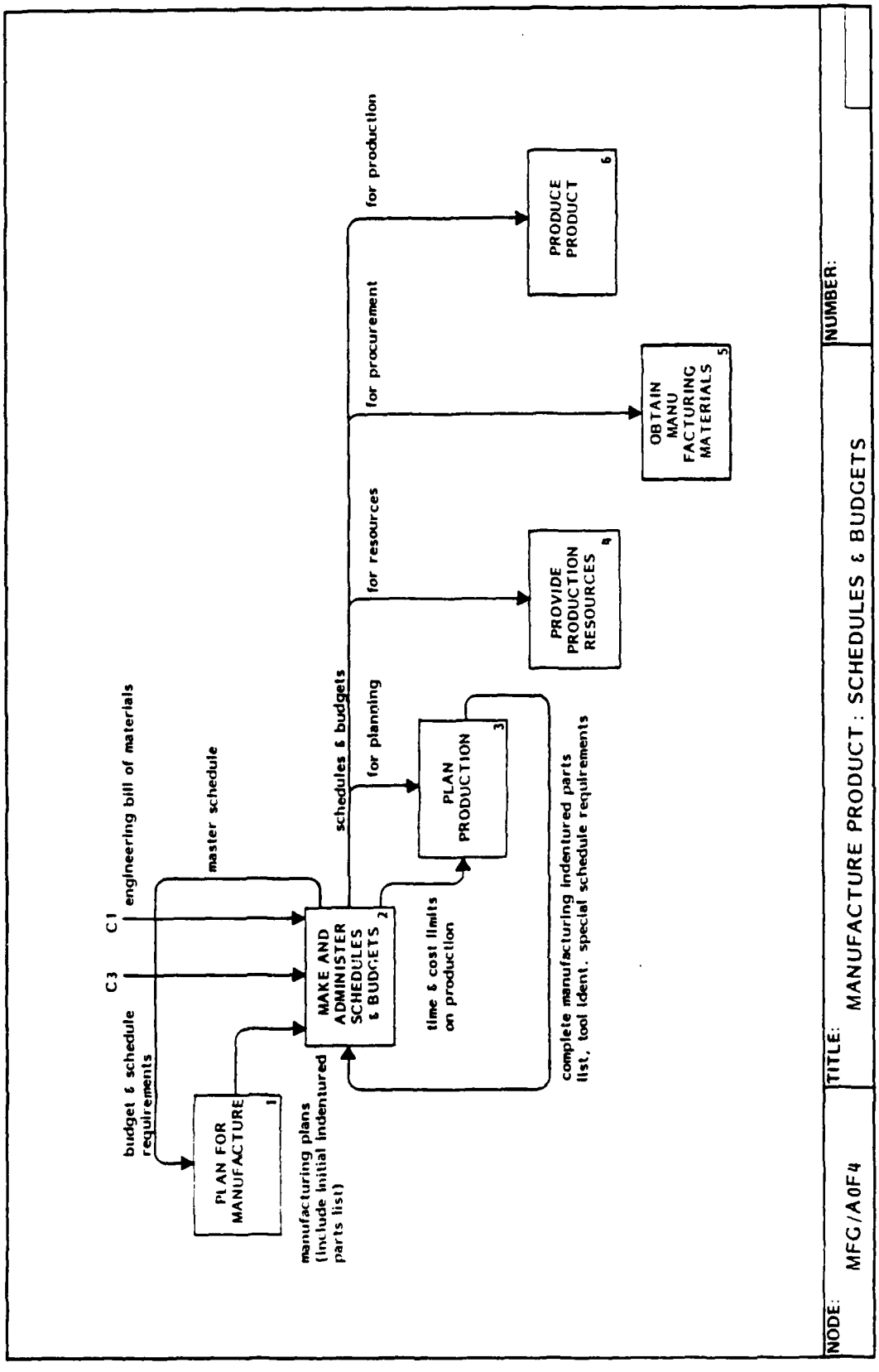

PUBLICATION

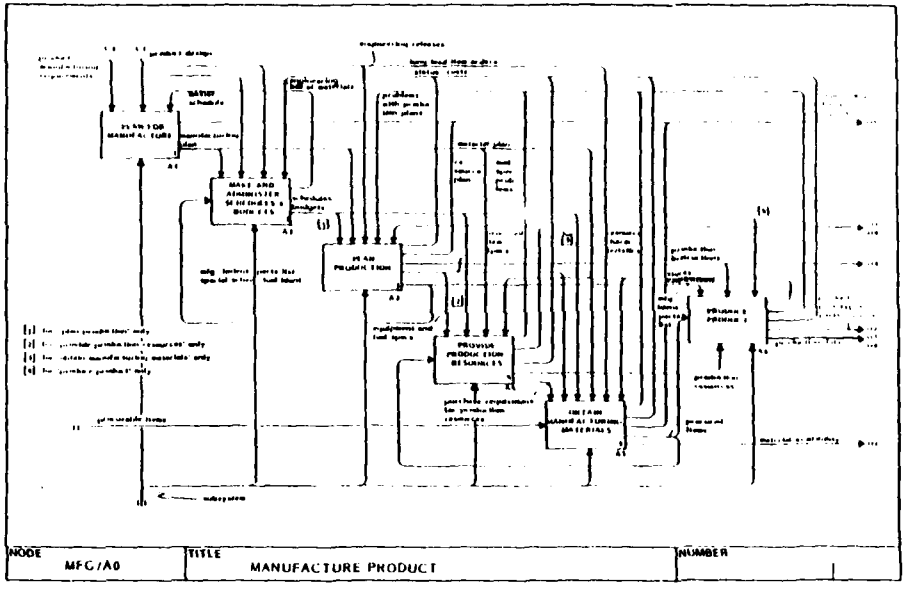

A1 Plan for Manufacture

The "Plan for Manufacture" is made as follows:

Beginning with the product design as released from the Design activity, and with the product manufacturing requirements established by the needs statements, and with the sum total of past experience and know-how and the capabilities of the manufacturer, a manufacturing plan is developed. This is an iterative process of assumption, evaluation and comparison with requirements.

Box 1 develops the grand strategy of the product manufacture, breaking it down by major subassemblies and then successively dependent subassemblies. Manufacturing methods, source of material, the plant capabilities (present or purchasable), costs and delivery times are assessed. Box 2 evaluates each strategy, and feeds back the evaluation. Box 1 can then introduce variations to improve (or optimize) the plan. The ultimate decision on a strategy occurs when Box 1 determines that the plan under consideration adequately meets the design and product manufacturing requirements.

When a plan is selected, a detailed manufacturing plan and support activity plan are developed. No attempt is made at this stage to carry these work statements to the ultimate level of detail. A later activity, A3, Plan for Production, performs that task. However, Activity A1 determines the boundaries within which product planning is carried on.

Glossary

Selected Structure - The manufacturing breakdown of the product which is determined to best meet the product manufacturing requirements.

Method of Manufacturing - The general concept determined to be the best method of combining

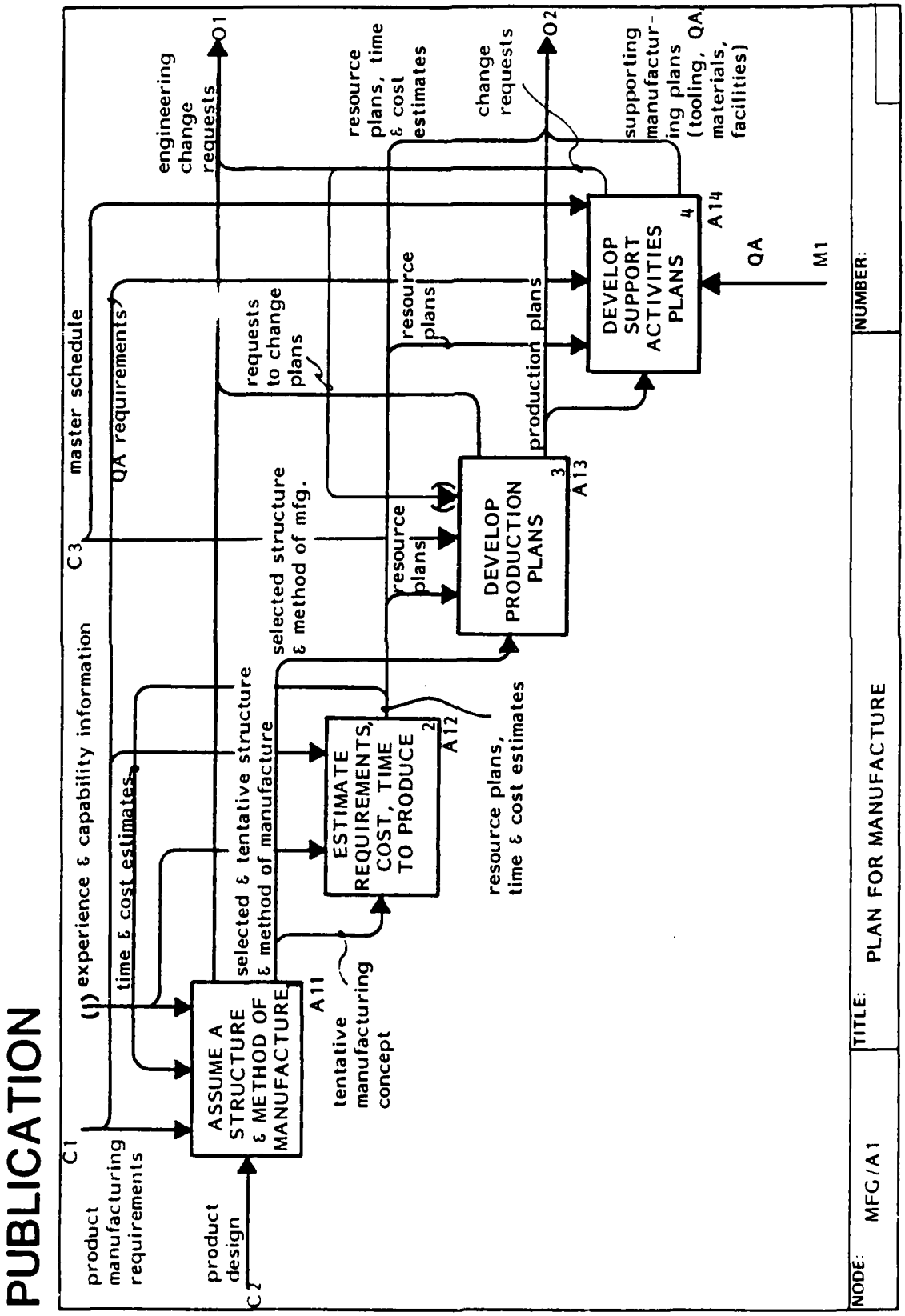
PUBLICATION
product manufacturing requirements
C1
product design
C2
(1) experience & capability information
time & cost estimates
ASSUME A STRUCTURE & METHOD OF MANUFACTURE
A11
selected & tentative structure & method of manufacture
tentative manufacturing concept
ESTIMATE REQUIREMENTS, COST, TIME TO PRODUCE
2
A12
resource plans, time & cost estimates
selected structure & method of mfg.
resource plans
DEVELOP PRODUCTION PLANS
3
A13
C3
master schedule
QA requirements
requests to change plans
resource plans
production plans
DEVELOP SUPPORT ACTIVITIES PLANS
4
A14
QA
M1
engineering change requests
O1
resource plans, time & cost estimates
change requests
O2
supporting manufacturing plans (tooling, QA, materials, facilities)
NODE: MFG/A1
TITLE: PLAN FOR MANUFACTURE
NUMBER:

A1 Glossary (con't)

manufacturing resources to produce the product which requires cost, schedule, and technical evaluation.

Tentative Concept - A preliminary concept of combining manufacturing resources to produce the product which requires cost, schedule, and technical evaluation.

Time and Cost Estimates - Output from the cost and schedule evaluations of a tentative concept of manufacturing.

Resource Plans - The identification of major types of manufacturing resources required to manufacture the product and the general plan for obtaining those resources. These include plans for facilities, equipment, tools, and manpower.

Supporting Manufacturing Plans - The general concept of obtaining and using specific types of manufacturing resources to support the manufacture of the product (i.e., quality, material, tooling, etc.)

Experience & Capability Info - Available information on previously used manufacturing resources and methods which is available to support the manufacture of the product at hand.

QA Requirements - Customer quality specifications may be additionally refined to reflect company specs.

A11 Assume a Structure and Method of Manufacture

This activity and the following (A22) perform the interactive convergence on a selected manufacturing concept. This activity performs the evaluation. The time and cost estimate feedback from A12 allows this activity to refine the concept.

In addition to the product design and the product manufacturing input, this activity draws very heavily in all its phases, on the backlog of experience and know-how of the creative personnel.

As the product design is broken down into successively finer subassembly levels, make or buy decisions are made. For these things to be made, manufacturing methods are hypothesized and defined. Similarly, experience and know-how are called upon in devising an assembly method. In the process, producibility considerations requiring (or making desirable) engineering changes may be identified, and change requests generated.

PUBLICATION

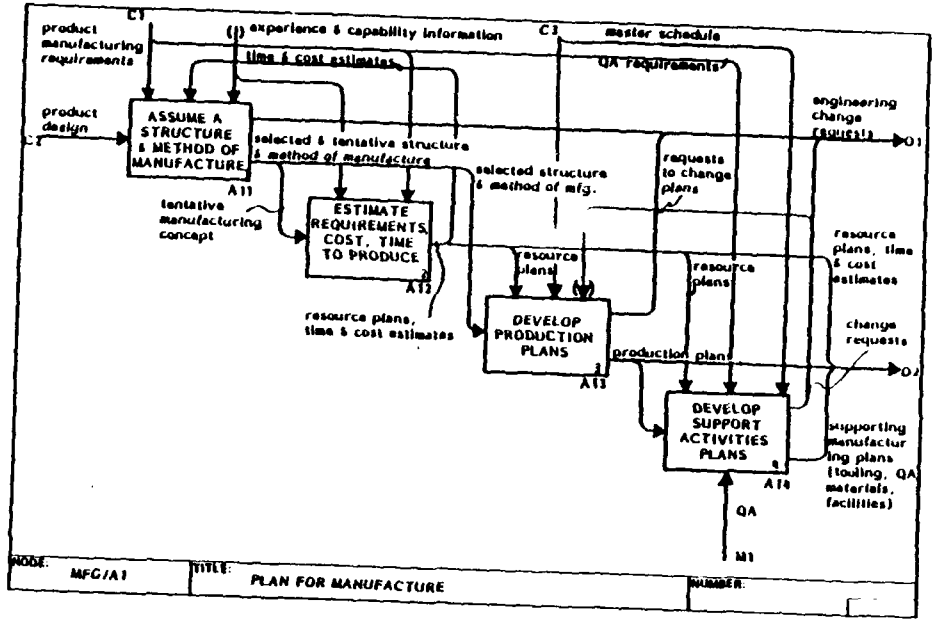

Glossary

Major Configuration Units - Large manufacturing assemblies which result from the manufacturing breakdown of the product to the first level of detail. (Example: fuselage section, wing)

Source Requirements - Decisions made by parties external to the manufacturing environment on the source of manufacturing various parts of the product.

Tentative Make or Buy Decisions - Selection of procurement or in-house manufacturing for various major configuration units of the product.

"Made" Unit Identification - Those major configuration units for which a make in-house decision has been made.

Assembly Station Plan - A postu-

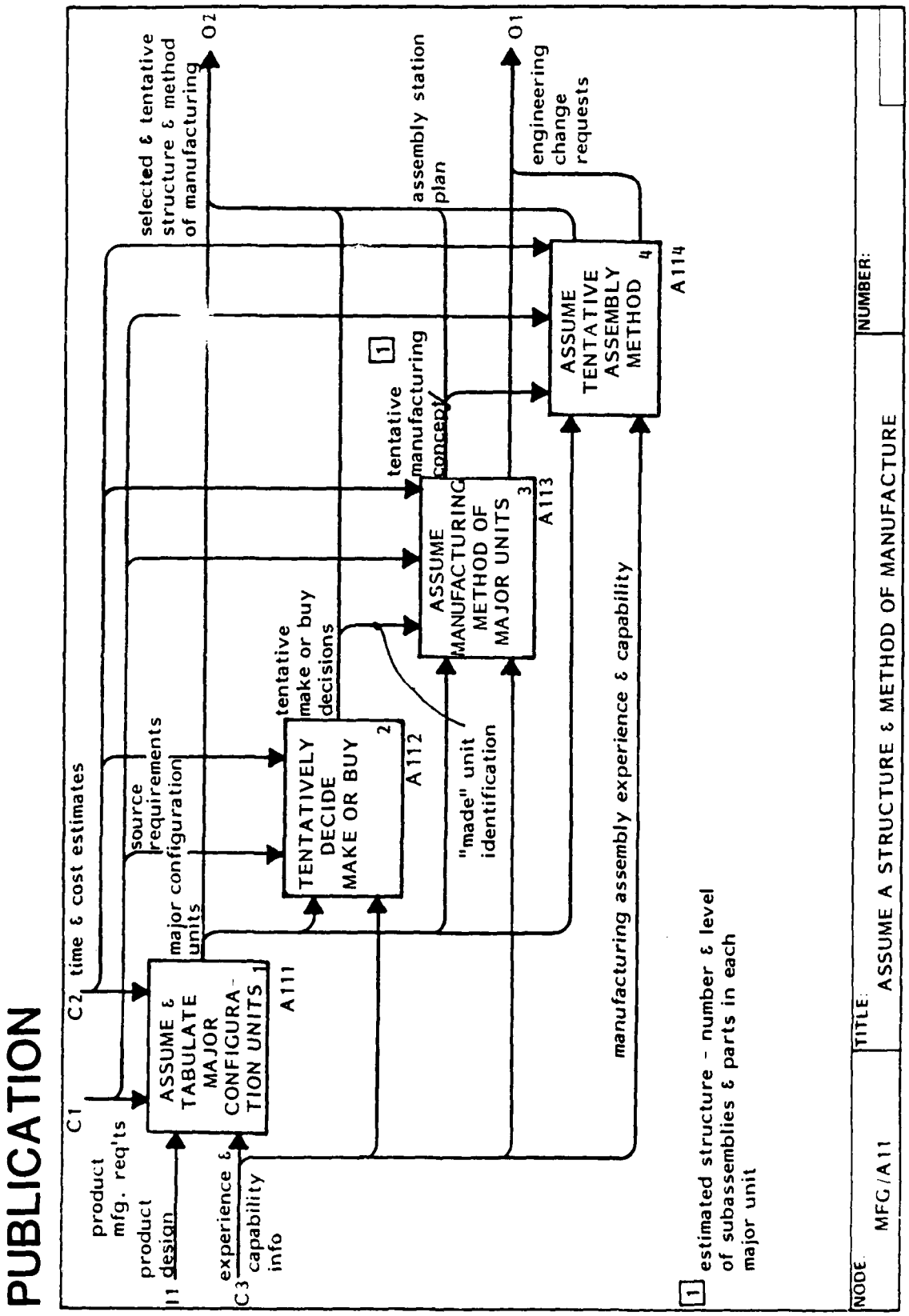
PUBLICATION
C1
product mfg. req'ts
I1 product design
C2 time & cost estimates
C3 experience & capability info
ASSUME & TABULATE MAJOR CONFIGURA-TION UNITS 1
A111
major configuration units
source requirements
TENTATIVELY DECIDE MAKE OR BUY 2
A112
tentative make or buy decisions
ASSUME MANUFACTURING METHOD OF MAJOR UNITS 3
A113
"made" unit identification
tentative manufacturing concept
1
ASSUME TENTATIVE ASSEMBLY METHOD 4
A114
selected & tentative structure & method of manufacturing
O2
assembly station plan
O1
engineering change requests
manufacturing assembly experience & capability
1 estimated structure - number & level of subassemblies & parts in each major unit
NODE:
MFG/A11
TITLE:
ASSUME A STRUCTURE & METHOD OF MANUFACTURE
NUMBER:

All Glossary (con't)

lated sequence of manufacturing of major assemblies flows through individual manufacturing stations to best accomplish the manufacture of the product.

Selected and Tentative Structure and Method of Manufacturing - The breakdown of the product and the general concept of combining manufacturing resources to manufacture that product are postulated to best meet the product manufacturing requirements.

A111 Assume and Tabulate Major Configuration Units

Appropriate section breakdown for optimized production flow is initially conceptualized based on latest engineering layouts, specifications, associated requirements and prior experience (Box 1). Optimum production breaks are established (Box 2) based on design refinements and the most economic method of production. Major unit configurations are determined (Box 3), striking the proper balance between schedule requirements and allowing for a smooth flow of work into process.

Glossary

Major Units Concepts & Design Information - Major assembly sections defined (i.e., wing, fuselage, empenage, vertical-horizontal stabilizer, etc.).

Optimized Break Points - Major assembly breakdown identified as most advantageous for economical production and product function.

PUBLICATION

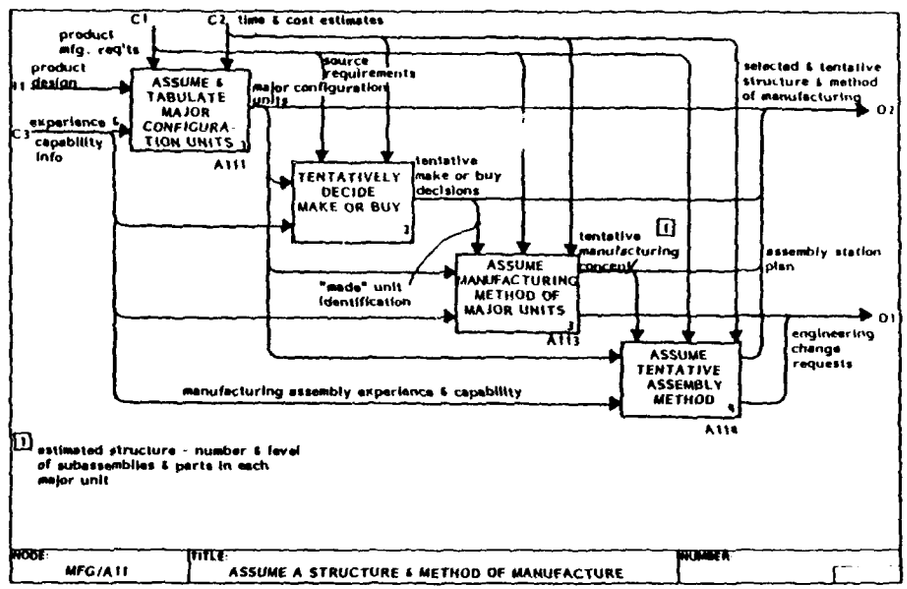

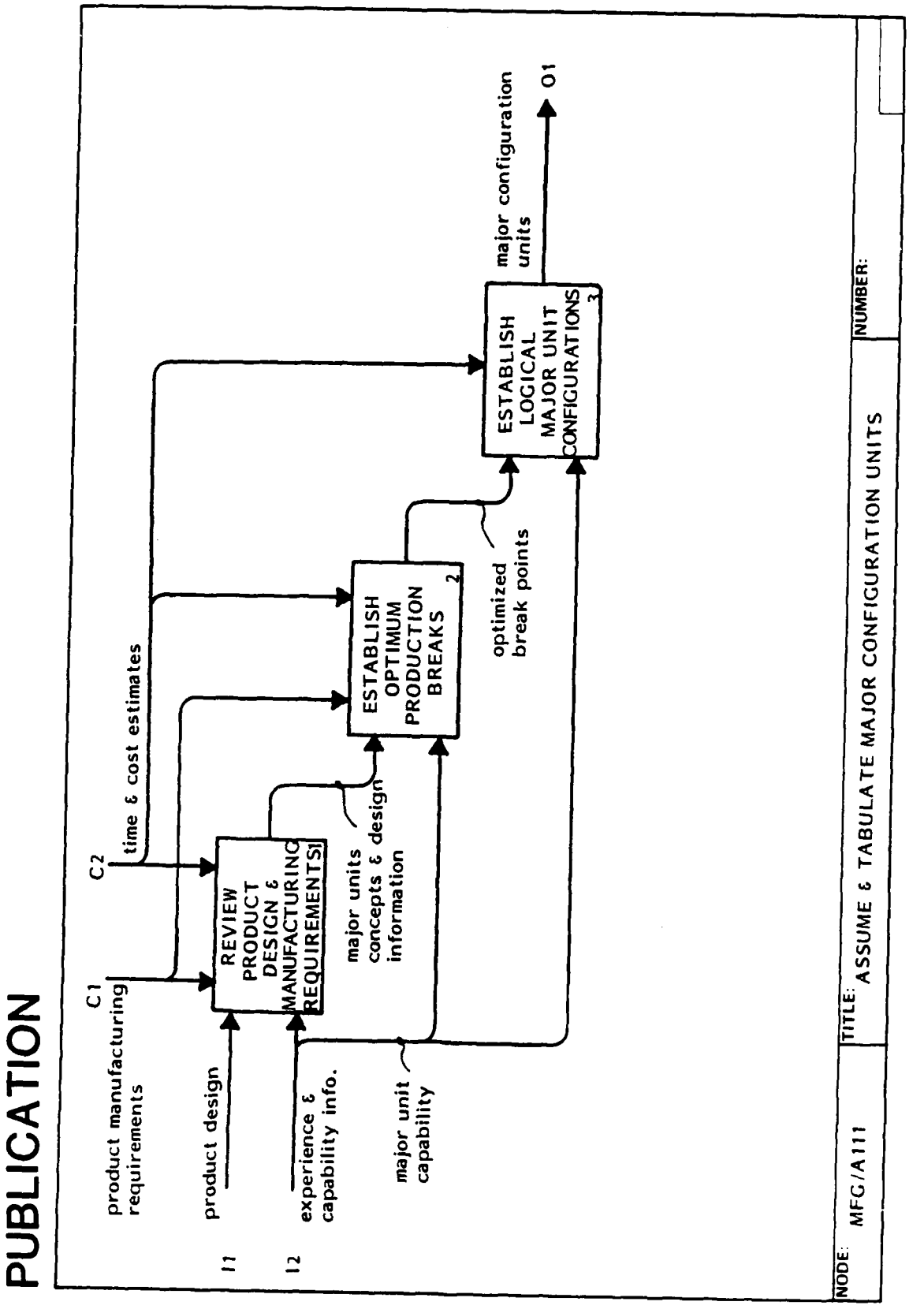
PUBLICATION
C1
product manufacturing requirements
I1
product design
C2
time & cost estimates
I2
experience & capability info.
REVIEW PRODUCT DESIGN & MANUFACTURING REQUIREMENTS 1
major units concepts & design information
major unit capability
ESTABLISH OPTIMUM PRODUCTION BREAKS 2
optimized break points
ESTABLISH LOGICAL MAJOR UNIT CONFIGURATIONS 3
major configuration units
O1
NODE: MFG/A111
TITLE: ASSUME & TABULATE MAJOR CONFIGURATION UNITS
NUMBER:

A112 Tentatively Decide Make or Buy

Overall capabilities and capacities requirements (Box 1) are initially determined. Internal capability may be limited by lack of sufficient machinery to either make parts or maintain schedule requirements. Therefore, in-house capabilities and capacities are determined relative to the program (Box 2). Evaluation of vendor capabilities and capacities (Box 3) must be evaluated regarding their capabilities to perform and their capacities to econmically provide fabrication and/or assembly assistance. When these qualities are documented, a tentative make or buy plan can be decided on (Box 4) and factored into cost, technical quality and schedule requirements.

Glossary

Available In-House Resources - Plant capacity, workforce, skills mix, technological know-how, etc., available within the firm.

Available Outside (Vendor) Resources - Existing product lines, available capacity, past performance, interest, etc., of potential suppliers/subcontractors.

PUBLICATION

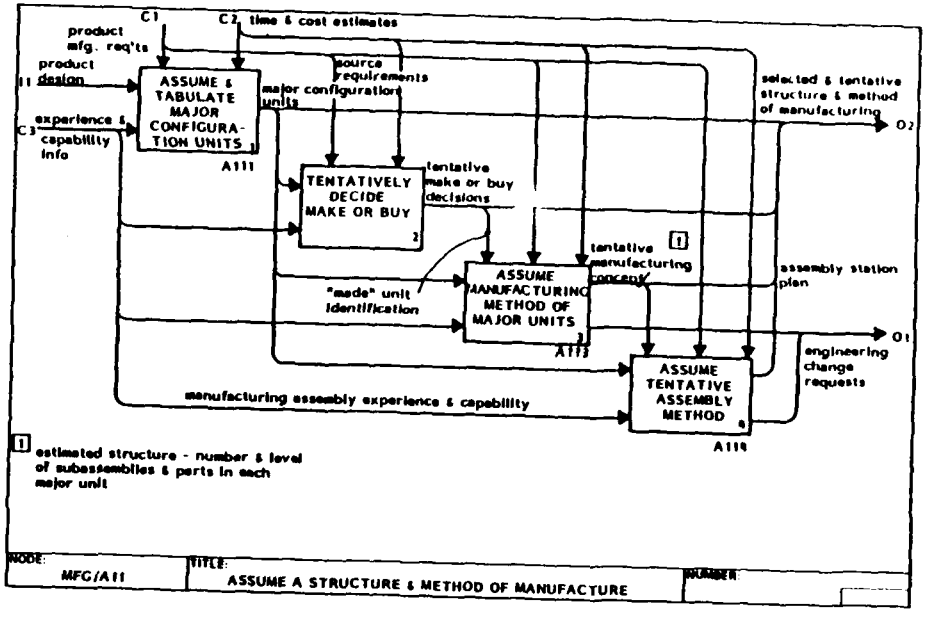

Tentative Make or Buy Decisions - Recommendations based on program resource requirements relative to available internal and external resources.

Approved Bidders List - List of suppliers authorized for consideration in bid solicitation and source selection.

Manufacturing Needs - Overall manufacturing capabilities and capacities required to build the defined major configuration units.

PUBLICATION

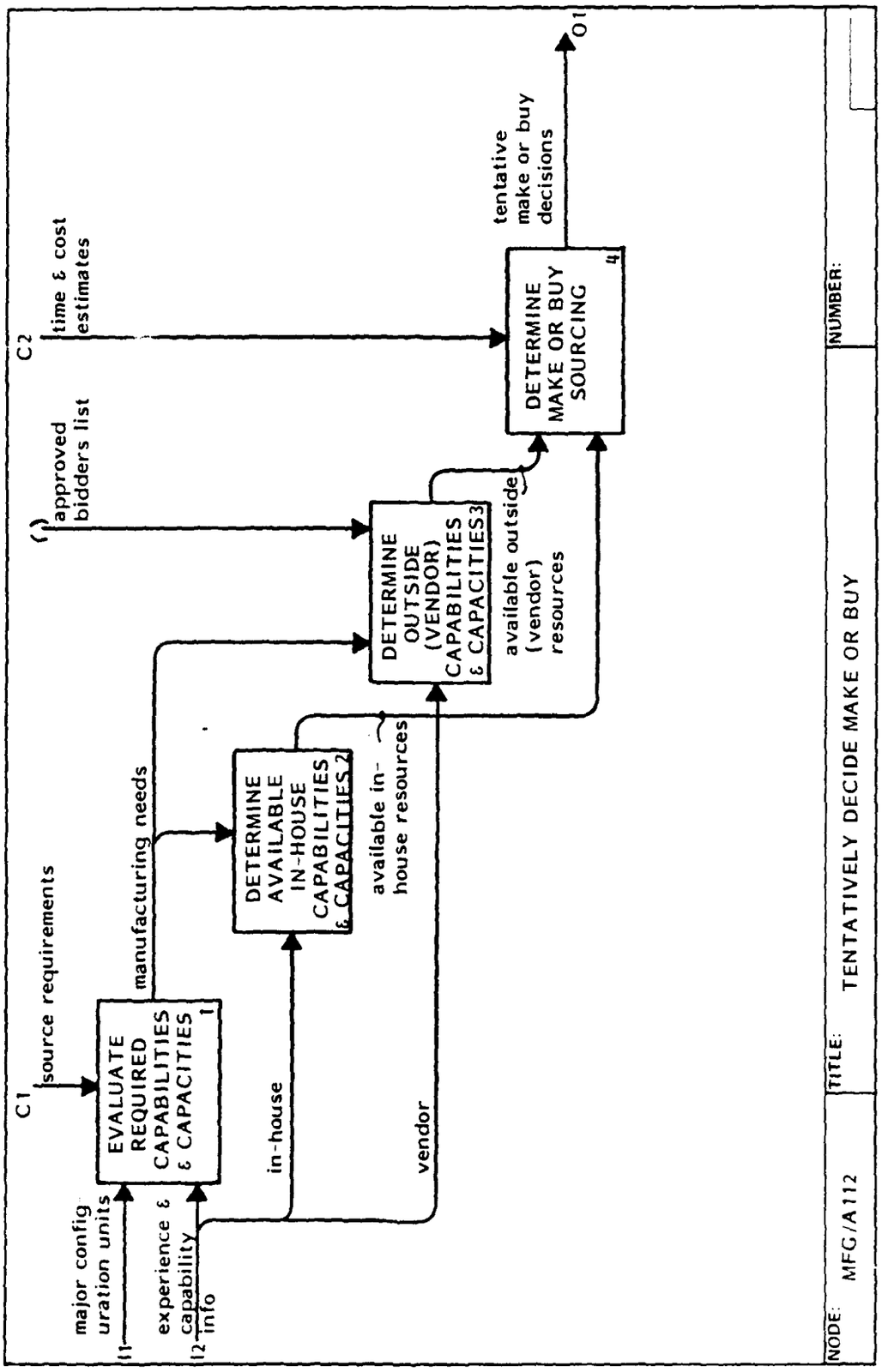

A113 Assume Manufacturing Method of Major Units

Major sub-assemblies are generally composed of units of production that have structural boundaries which are identifiable. They are amenable to identification and as such can be used as a basis for determining schedule requirements (Box 1). As a result of such identification sub-assembly, breaks (Box 2) can be determined that would permit a sequential fabrication flow. Based on sub-assembly breaks, tooling requirements can be established (Box 3). The assembly flow plan (Box 4) is then devised and is based on sub-assembly requirements which are required to assemble major assemblies.

Glossary

Major Assembly Breaks - Structural boundaries comprising each major assembly unit.

Subassembly Breaks - Further structural breakdown of major assemblies into units of an optimum size for utilization of floor-mounted tooling.

Tool & Space Requirements - Identification of floor-mounted assembly tool, related work platform and area requirements for each subassembly.

PUBLICATION

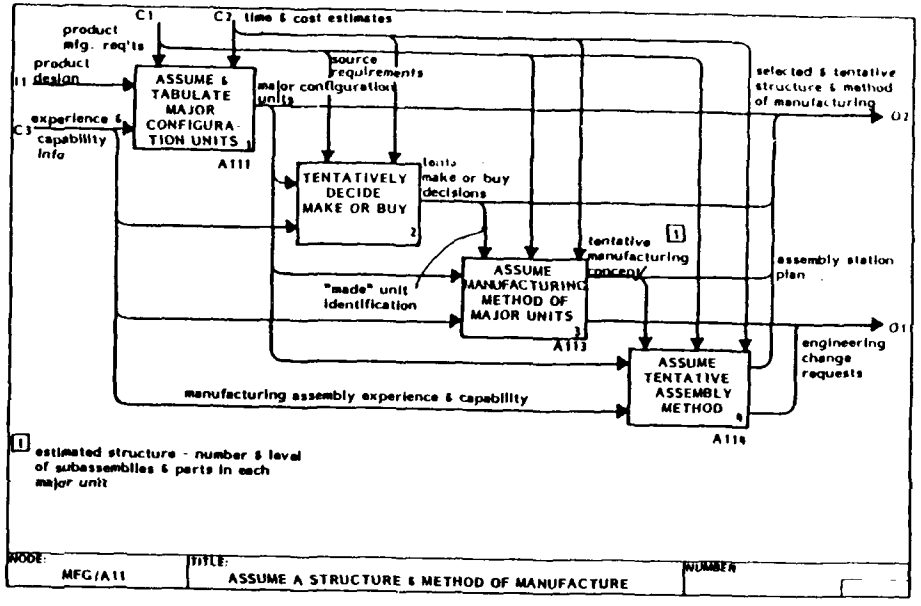

PUBLICATION

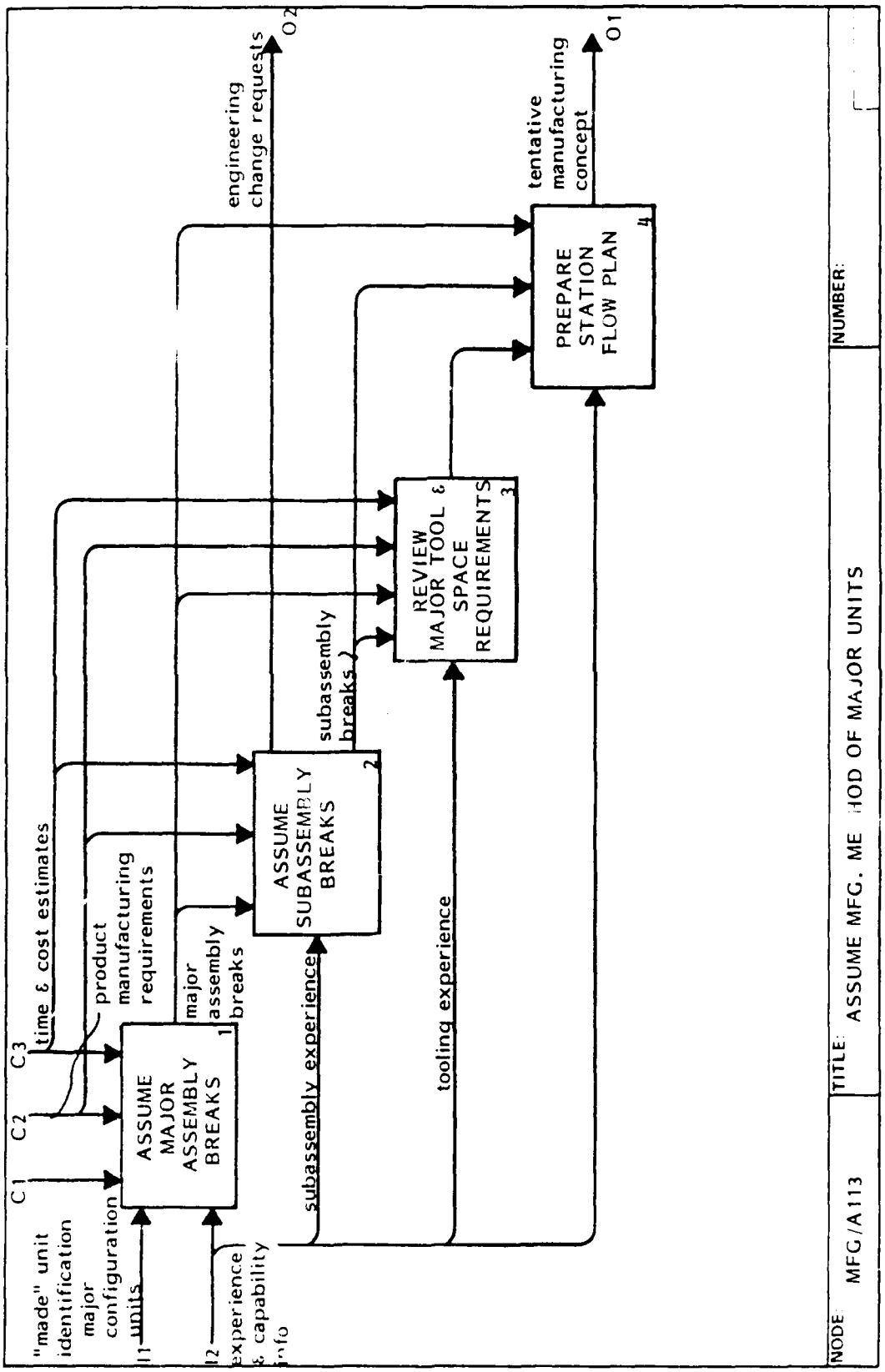

A114 Assume Tentative Assembly Method

Methods of assembly are required to select least cost and time parameters as well as to meet the assembly flow plan (Box 4 of CV/A113). The assembly plan (Box 1) is devised and preferred methods are identified which will meet requirements previously established concerning delivery. Once the assemly methods are determined, the tooling and assembly future requirements (Box 2) must be devised/identified. By illustrating the assembly methods and the associated tooling requirements to achieve assembly, total assembly method concepts can be graphically displayed which will provide a three-dimensional view of the relationships between parts, tooling and platforms requirements (Box 3). Using the above information, the assembly statior plan (Box 4) can be documented which provides the overview and some detail relative to assembly and tooling requirements which will enable adherence to schedule as well as technical cost requirements.

PUBLICATION

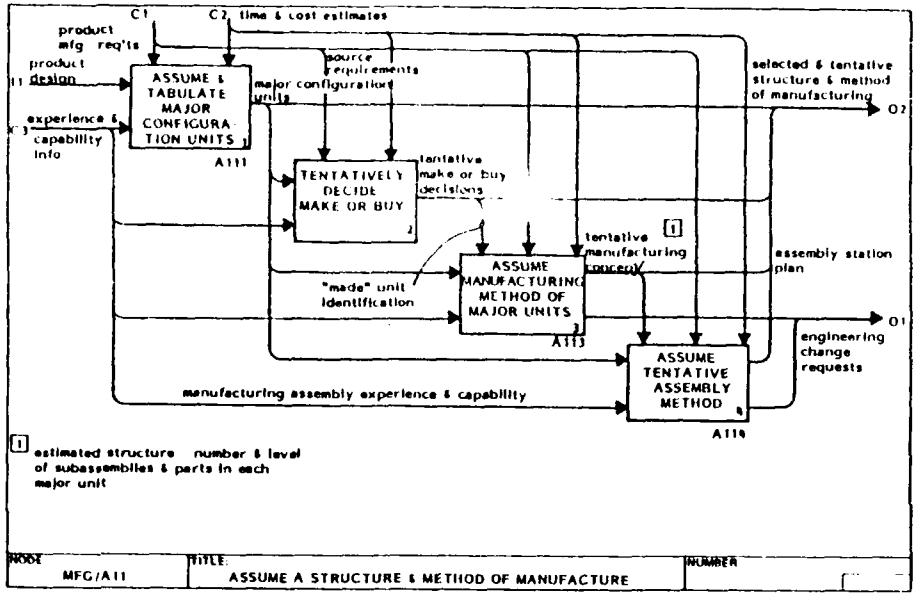

Glossary

Assembly Methods - Logical assembly flow arrangement for each subassembly.

Tooling Concepts - Instructional material, including sketches, defining fixtures and work platforms for planning purposes

Illustrations - "Exploded" drawing, showing tooling (fixture/work platform)/ subassembly relationships.

PUBLICATION

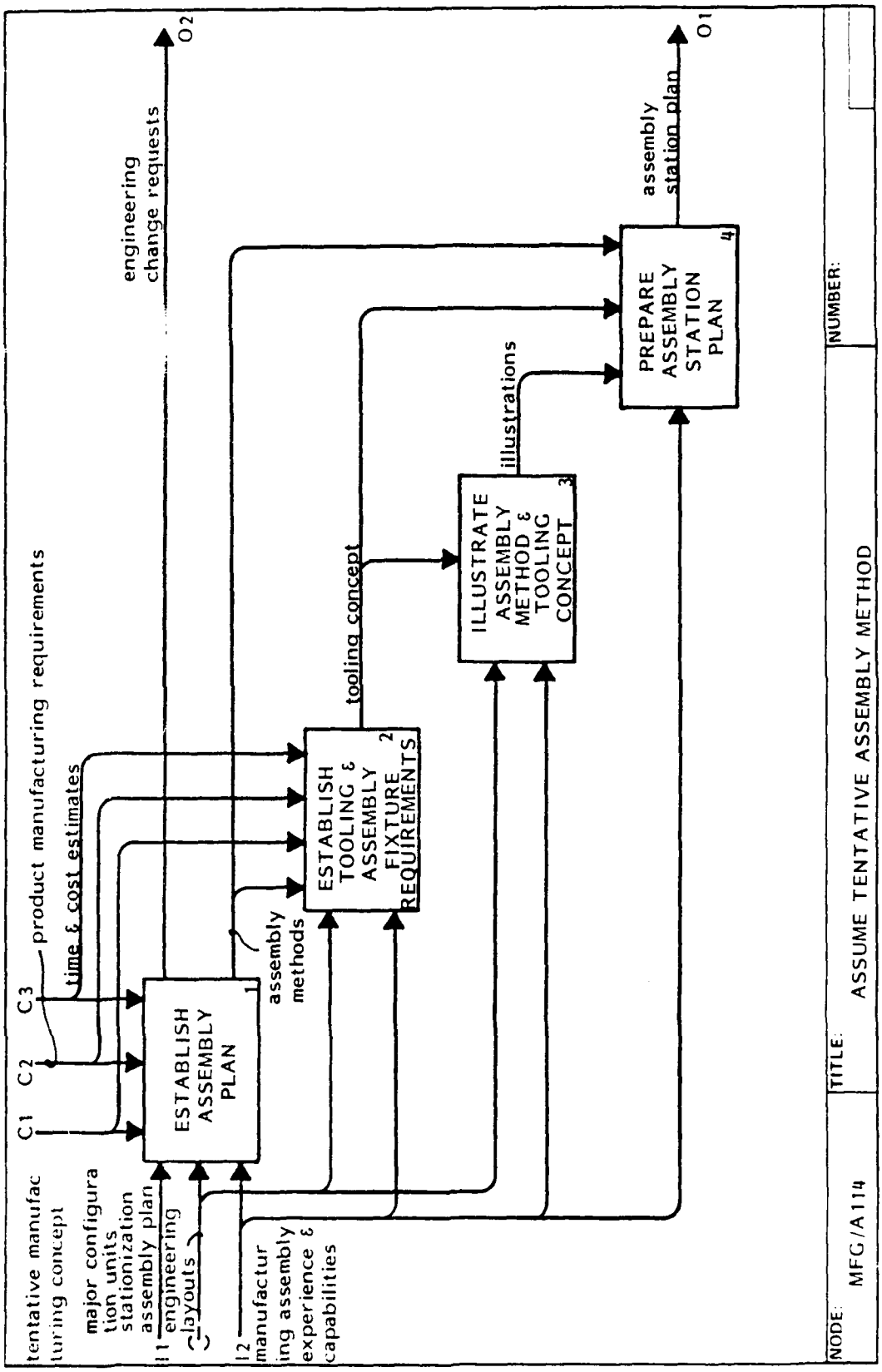

A12 Estimate Requirements, Time, and Cost to Produce

This activity evaluates the tentative manufacturing plans submitted by the preceding Activity A11, and returns its evaluation to the preceding activity.

Evaluation is divided into these areas of expertise:

- Facilities (plant space and services), equipment (machine tools and test equipment) and manpower. The need for each is estimated, and compared to what is available. If inadequate, an estimate is made of necessary acquisitions, their cost and their availability.
- Cost of materials, including acquisition, in raw material or finished form; fabrication: inspection; assembly; and test.
- Time needed to start up production and rate at which finished products can be delivered.

Again, the accumulated experience of the manufacturing concern in making similar products in the past will play a major factor in this activity.

PUBLICATION

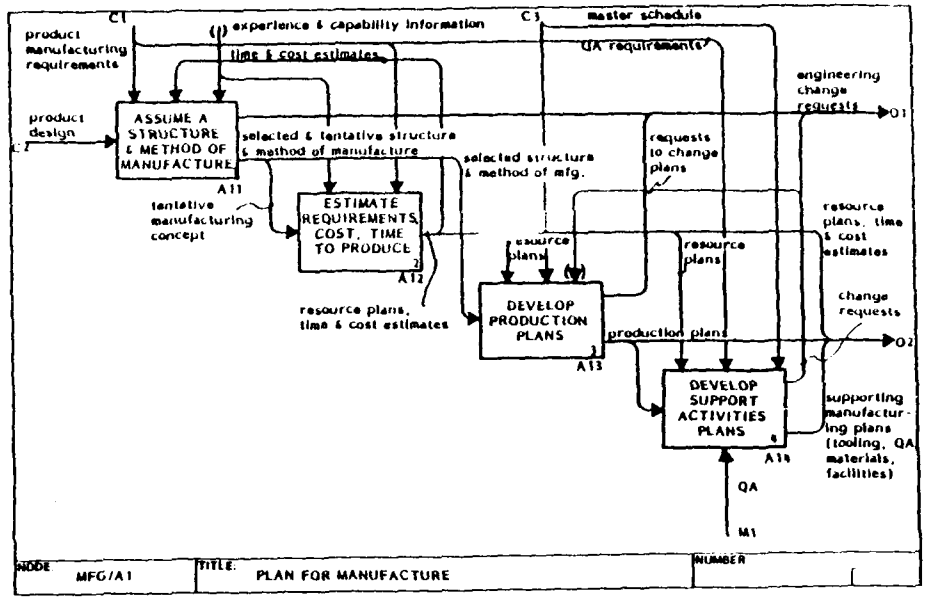

Glossary

Resource Requirements - A11 those things which are necessary to produce the product (people, paperwork, tools, parts, facilities, etc.)

Cost Limits Acquisition Requirements - Financial constraints and acquistion decisions external to the manufacturing environment which influence the cost of making or buying the selected product.

Delivery Requirements - End item schedule as determined by the "Manage" product activity.

Available Resources Information - Information on characteristics of resources needed to manufacture the product which might influence the evaluation of re-

PUBLICATION

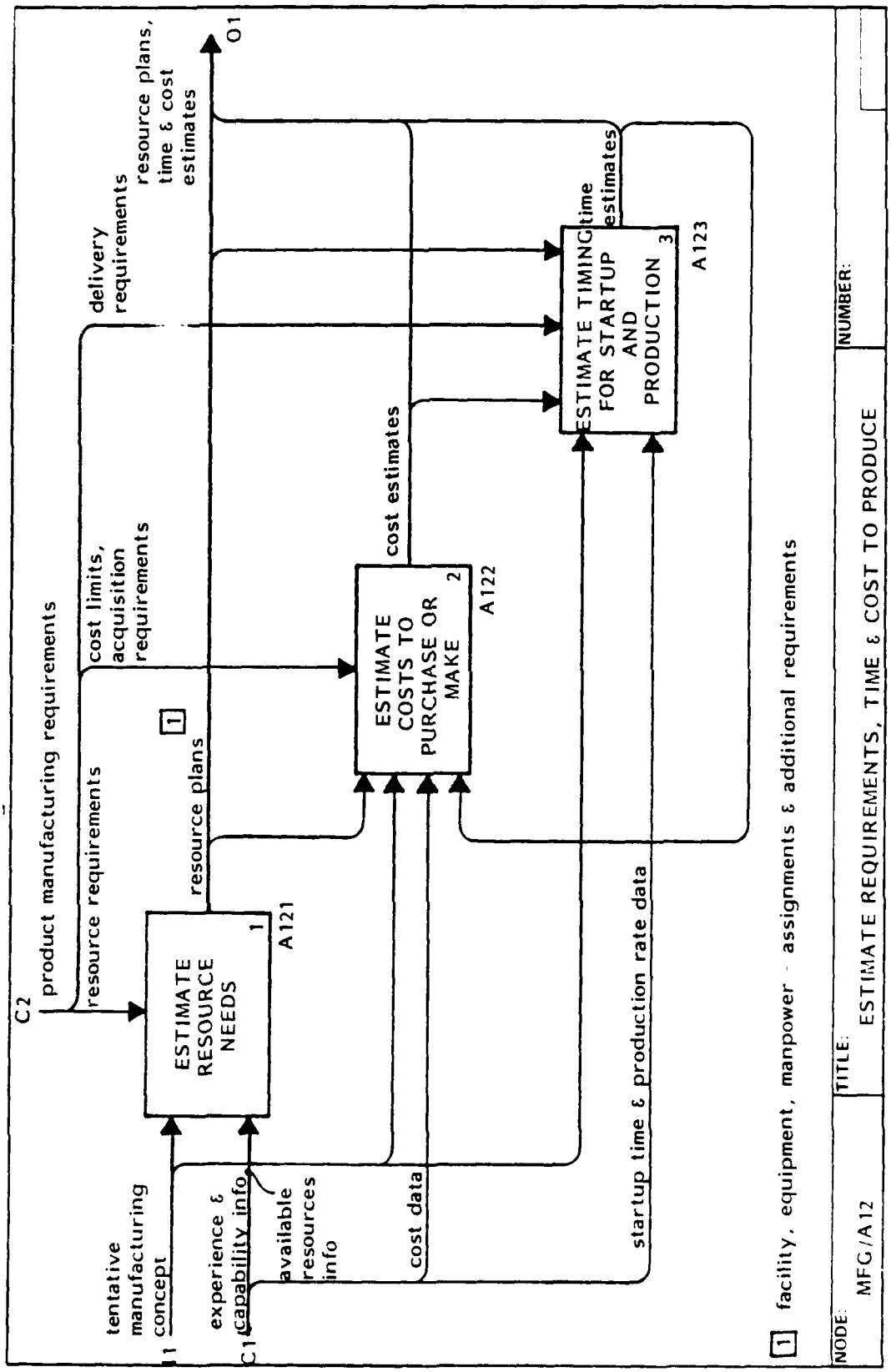

A12 Glossary (con't)

sources requirements. This might include material formability, lead time for procurement required maintenance/support, etc.

Cost Data - Of available methods and resources.

Startup Time & Production Rate Data - Manufacturing experience related to the manufacturing schedules and rates which can be supported by various manufacturing methods and resources, and the spans of time necessary to attain those rates with these methods/resources.

A121 Estimate Resource Needs

Subsequent to determining the Assembly Station plan, resource requirements to meet schedule must be determined. Facility and equipment capacities and tooling needs will force decision points relative to assembly requirements to meet delivery dates. Personnel requirements must be ascertained to plan sources of additional manpower and skills if required.

Glossary

Facilities Resource Plan - General plan for acquiring additional needed facilities (source, funding, etc.) and area utlization.

Equipment Resource Plan - General plan for obtaining additional needed machinery and equipment, special test equipment, etc., and overall utilization.

Tool Resource Plan - General plan for design and fabrication or procurement of special tooling.

PUBLICATION

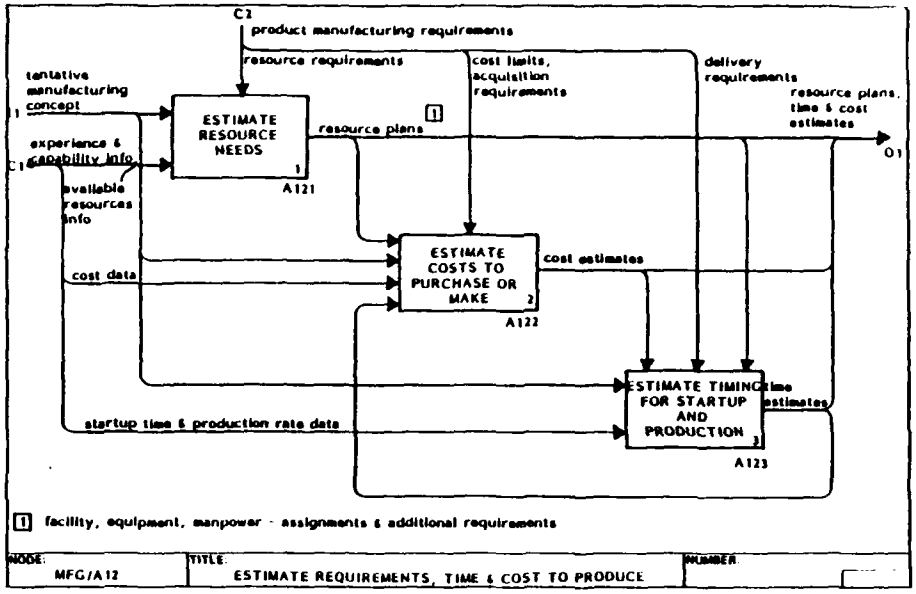

Personnel Resource Plan - General plan for acquiring needed additional employees, including recruiting, training, upgrading, multi-shift approach, overtime usage, etc.

PUBLICATION

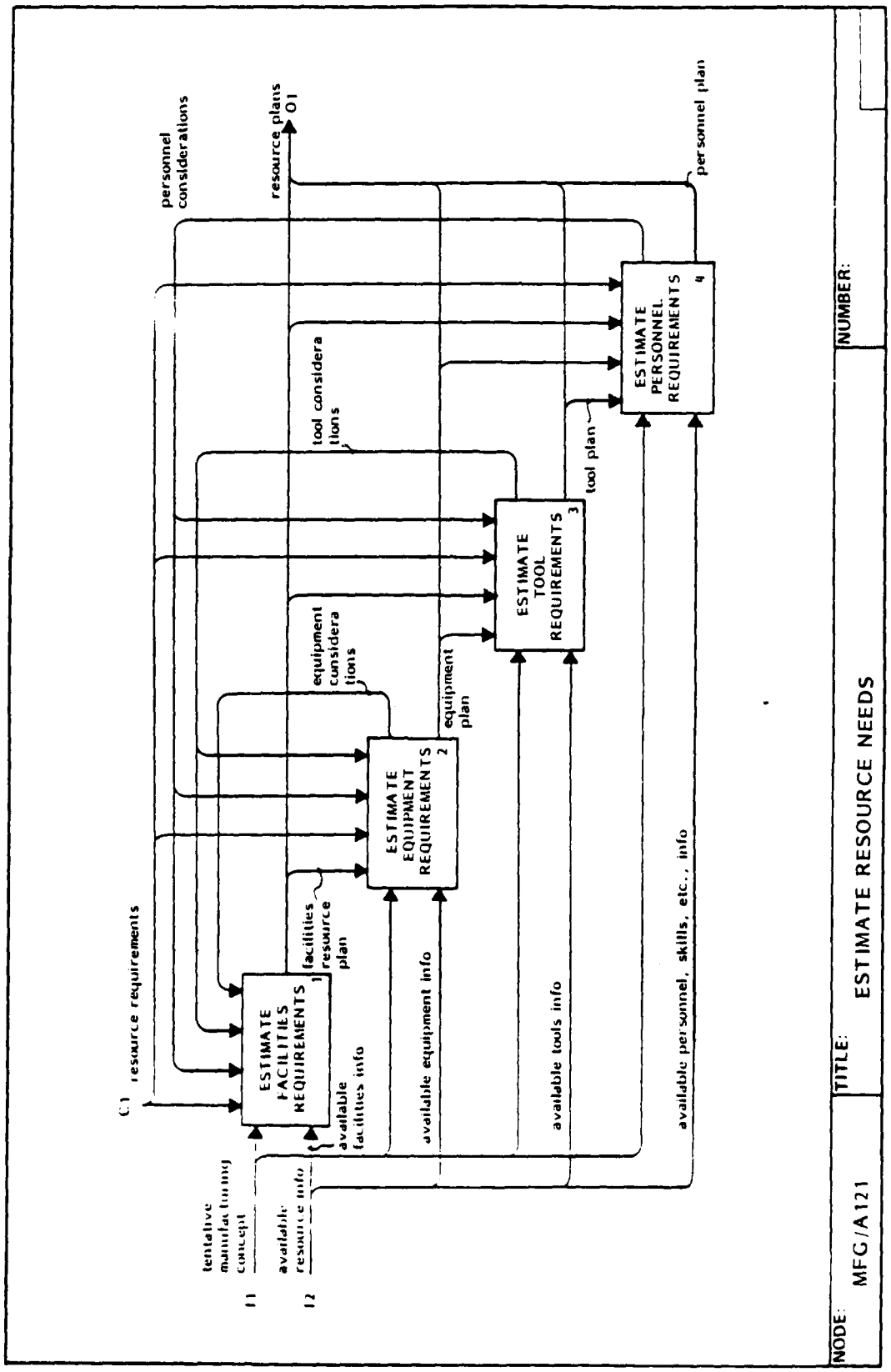

A122 Estimate Costs to Purchase or Make

Costs are segregated into recurring (repetitive requirements such as material, expense time, etc.) and non-recurring one-time costs (additional equipment, facilities, etc.). These costs are compared with vendor costs which are estimated based on previous history or preliminary quotes to allow for a purchase or make decision.

Glossary

Recurring Costs - Parametric estimates of fabrication assembly installation and other repetitive installation costs based on historical data and complexity factors.

Non-Recurring Costs - Parametric estimates of start-up costs including tooling and manufacturing test operations based on historical data and complexity factors.

Purchase Parts Cost - Parametric estimates of purchased hardware, raw material, subassemblies, equipment and labor based on historical data or actual quotes, as required.

PUBLICATION

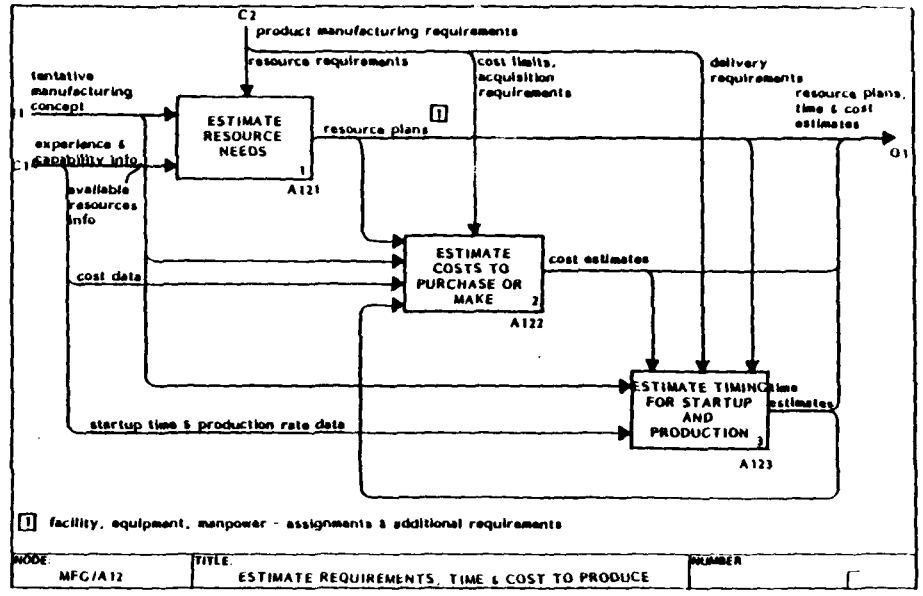

PUBLICATION

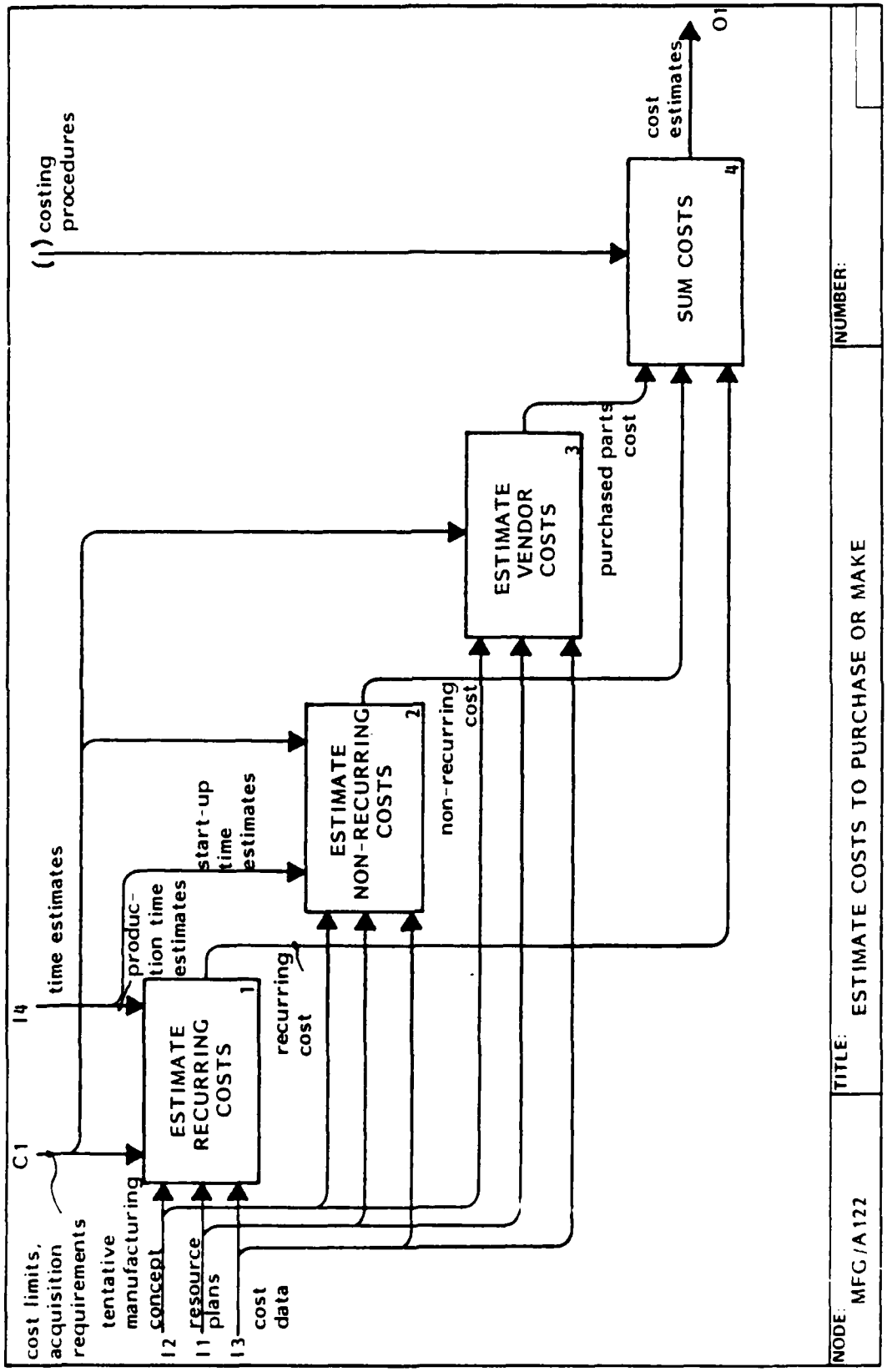

A123 Estimate Timing for Start-up and Production

Based on resource and cost constraints, time spans are developed for each station by discrete packages of work. In order to meet such a schedule, shift requirements must be ascertained and numbers of tool sets determined to maintain a smooth flow of work through the shop.

Glossary

Cycle Days - Number of days historically required to complete the sequence of operations for a given station.

Number of Shifts - Determination of the optimum number of workshifts to support delivery requirements.

Number of Tools - Determination of the optimum number of duplicate tools to support delivery requirements.

PUBLICATION

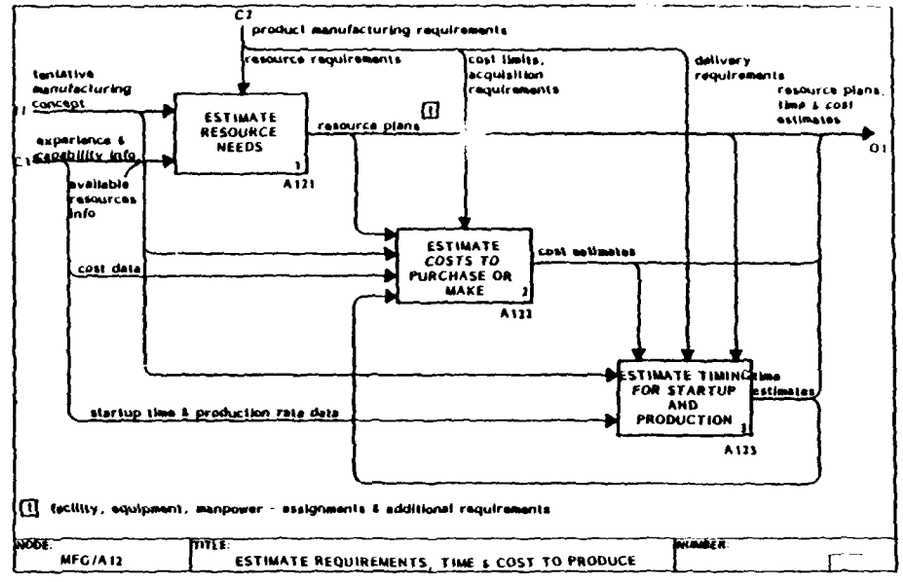

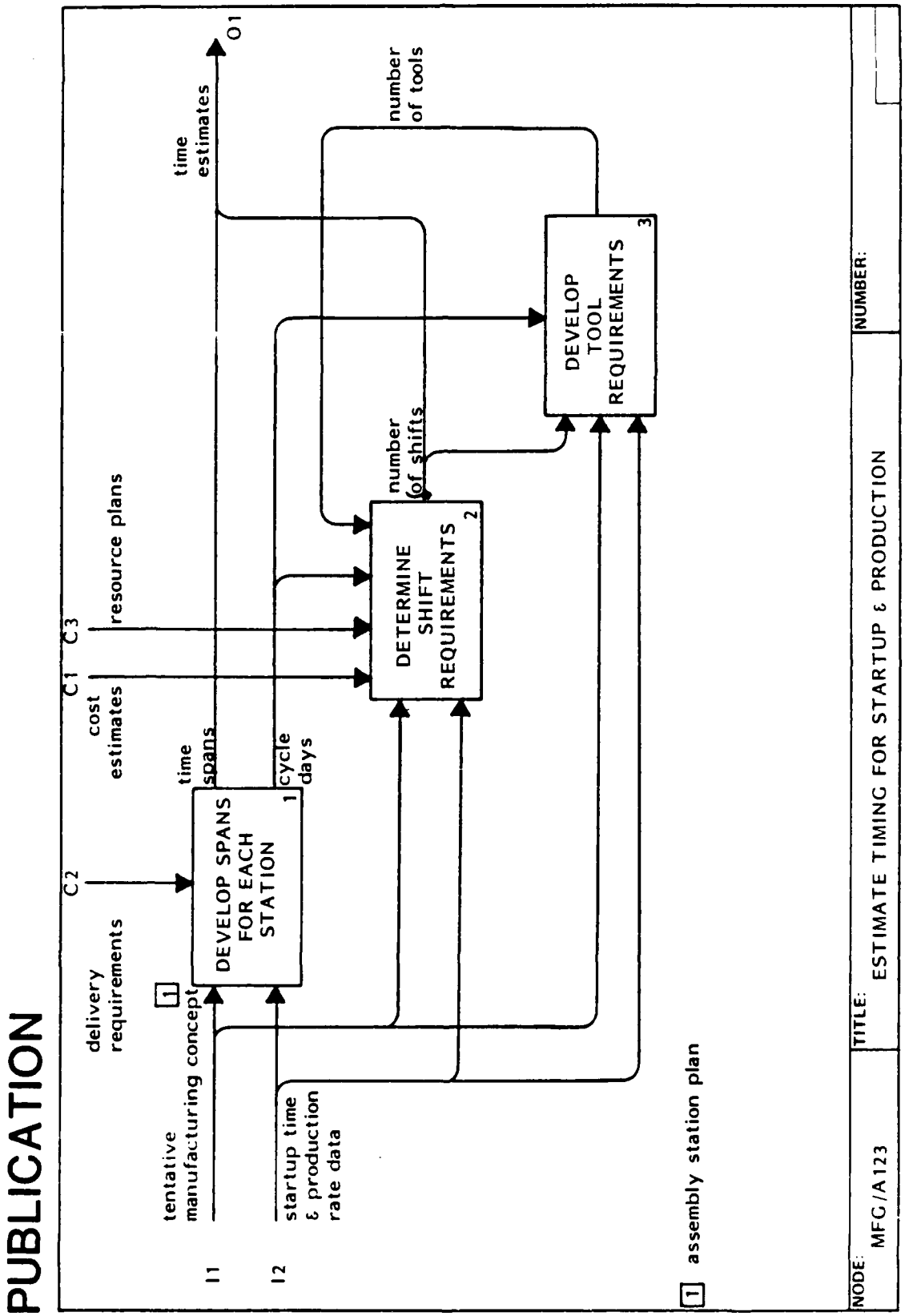
PUBLICATION
delivery requirements
C2
1
tentative manufacturing concept
I1
startup time & production rate data
I2
DEVELOP SPANS FOR EACH STATION
1
time spans
cycle days
C1
cost estimates
C3
resource plans
time estimates
O1
DETERMINE SHIFT REQUIREMENTS
2
number of shifts
number of tools
DEVELOP TOOL REQUIREMENTS
3
1 assembly station plan
NODE:
MFG/A123
TITLE:
ESTIMATE TIMING FOR STARTUP & PRODUCTION
NUMBER:

A13 Develop Production Plans

When a manufacturing plan has been selected (Activity A11) it is transmitted for further expansion and exposition to this and the following activity.

The manufacturing flow plan forms the basis upon which this activity is structured, particularly so in aerospace manufacture in which assembly is the dominant activity. Assembly can be portrayed by a dendritic (branching) pattern, like the leaves and limbs on a tree. The major branches join the trunk in a succession corresponding to major or "line" assembly operations, and smaller twigs join the branches in similar succession corresponding to batch assembly operations. Each twig carries a number of leaves, corresponding to detail parts.

At this stage of planning the complete list of details and first assemblies may not be available, but estimates based on experience can be made, and the batch and line assembly and installation operations can be quite fully planned.

The major output is a fully stated manufacturing plan. In addition, requests for engineering changes may be generated.

PUBLICATION

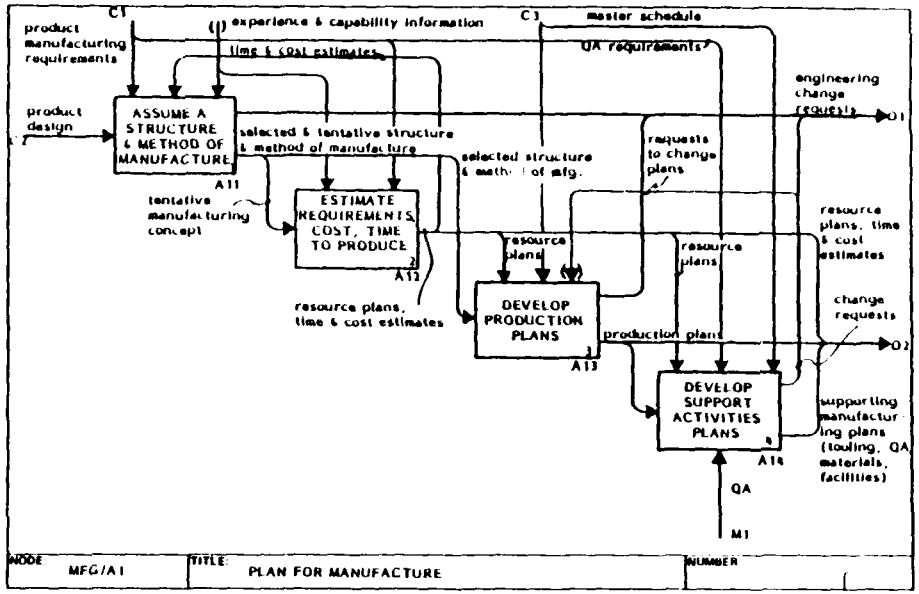

Glossary

Confirmed Structure & Method of Manufacture - Manufacturing sequence for the assembly build-up and the display media such as crew load charts which will portray this build-up. The sequence of manufacturing flow of the breakdown of the product through individual work stations to assemble the final product.

Fabrication Plan - The sequence and flow of detail parts necessary to accomplish the fabrication of these parts.

Line Assembly & Installation Plan - The general concept of combining manufacturing resources to accomplish assembly and installation of the highest level or in-

PUBLICATION

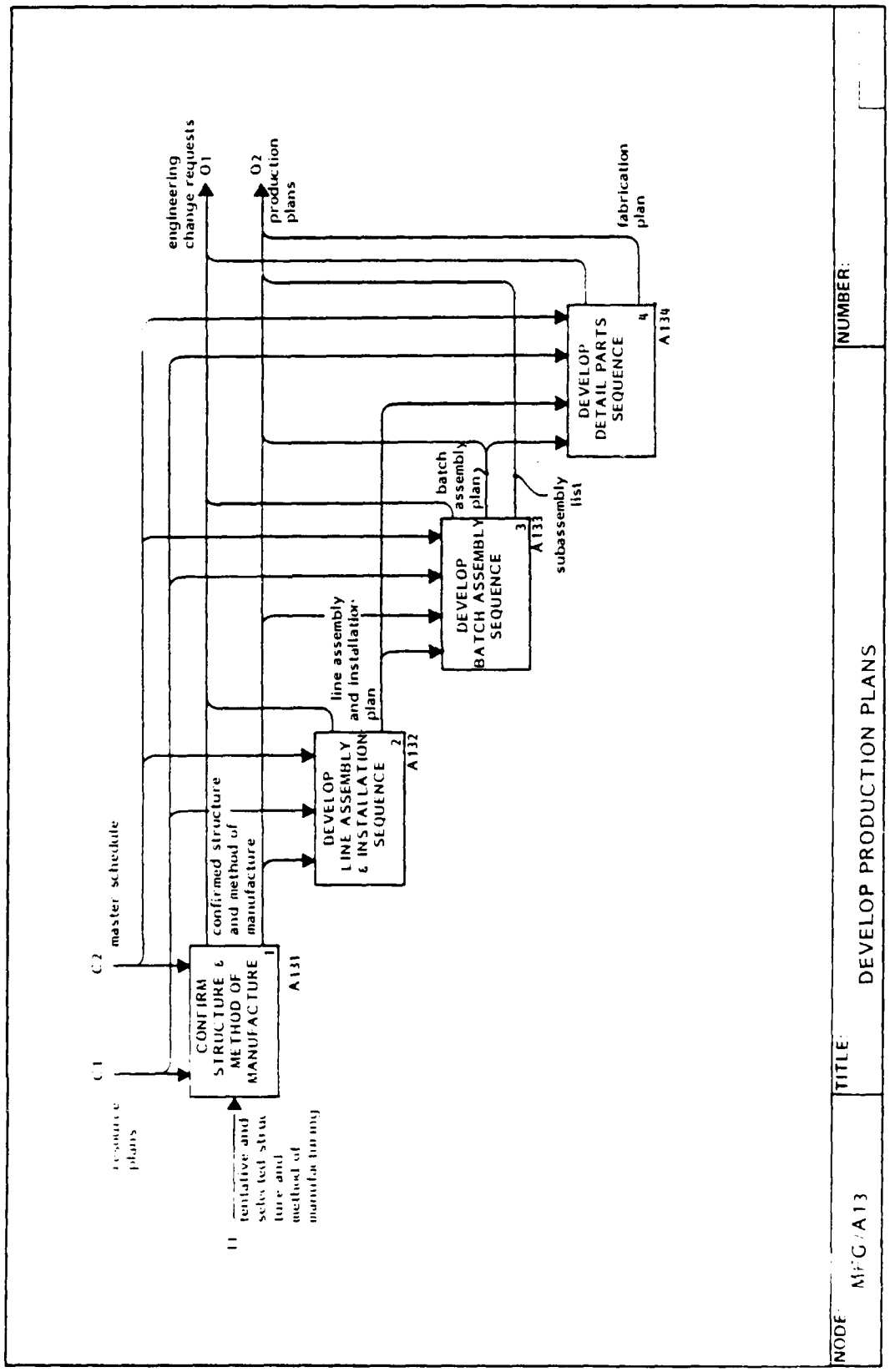

A13 Glossary (con't)

denture of parts to complete the manufacturing of the product.

Batch Assembly Plan - The general manufacturing concept which combines manufacturing resources to produce those assemblies (generally small in size) which can be produced in discrete lots.

A131 Confirm Structure & Method of Manufacture

The Confirm Structure & Method of Manufacture is a collection of plans which describe the progressive operations necessary to complete and assemble and/or install. The analysis is developed at the station level from a detailed review of available engineering designs and manufacturing concepts. This data is designed to display the efforts of all manufacturing to meet schedules and cost objectives.

Glossary

Major Section Breakdown - Breakdown of major sections of the product based on facilities arrangement, tooling and manufacturing techniques and final assembly requirements.

Major Assembly Breakdown - Functional division of major sections into logical sub-sections.

Sub Assembly Breakdown - Breakdown of product sub-sections (major assemblies) into units of manageable and accessible size for optimum use of facilities, tooling and personnel.

PUBLICATION

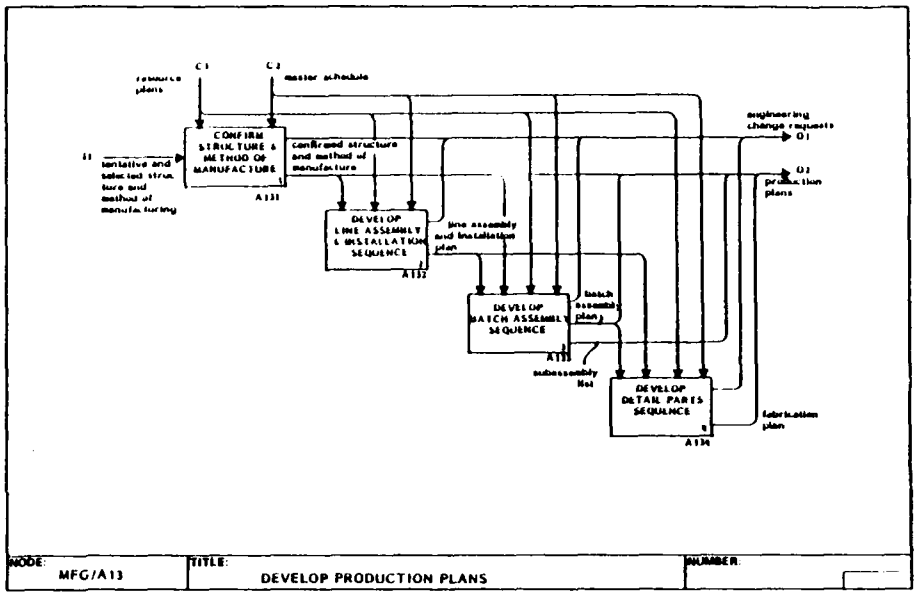

Tool Requirements - Floor-mounted sub-assembly and final assembly jigs and fixtures, and quantities required.

PUBLICATION

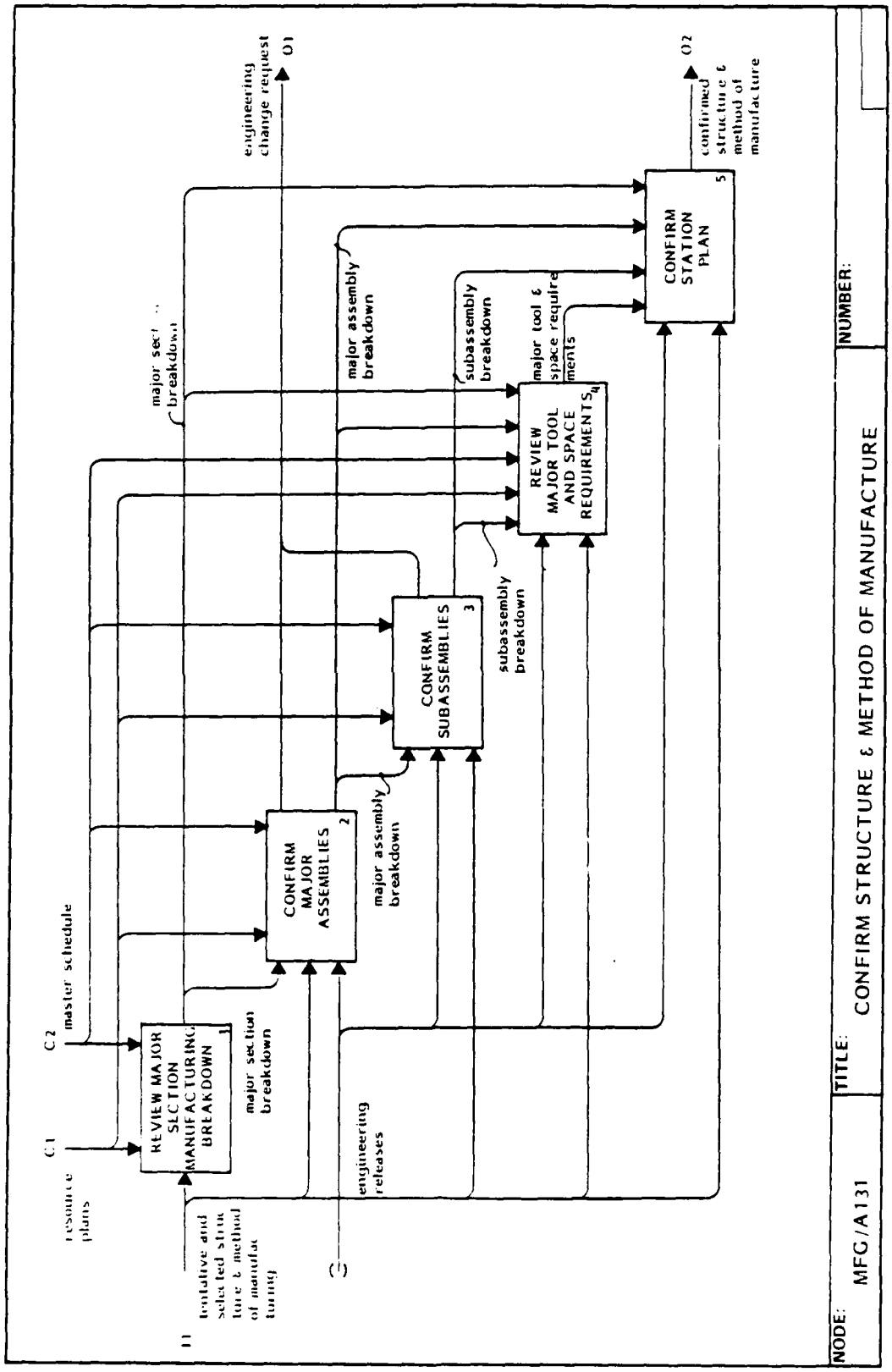

PUBLICATION

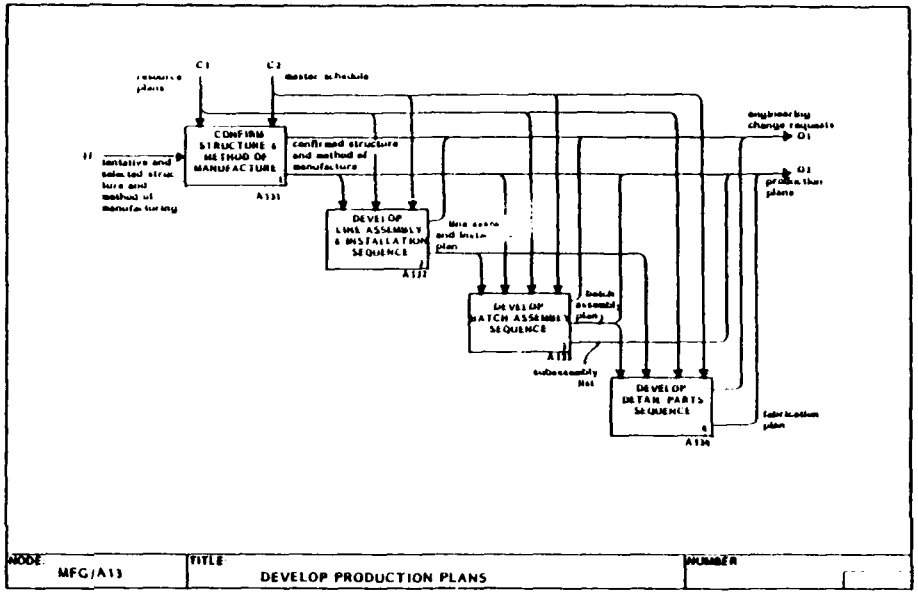

A132 Develop Line Assembly and Installation Sequences

The sequences are developed through review of engineering drawings, Station Plans, and utilization of Manufacturing Methods & Schedule Trade-offs. They are a part-by-part step-by-step detailed description of the assembly and installation effort. This information is forwarded to planning for preparation of the Manufacturing Work Instruction documents.

These activities are performed in parallel conjunction with those described in diagram CV/A221 "Establish Setbacks & Apply Flow Times".

Glossary

Production Sequence - Operational plan for the assembly of details and subassemblies in logical sequence.

Job Sequence Analysis - Determination of the characteristics and optimum order of events of a job through detailed observation and evaluation of the activities, required facilities, conditions of work and needed worker qualifications.

Kit - The staging of parts, tools, materials, instructions and other software required to perform specific manufacturing operations.

Kit Plan - Describe the optimum breakdown of specific job/tasks, to permit parts, tools and software to be available incrementally, as needed.

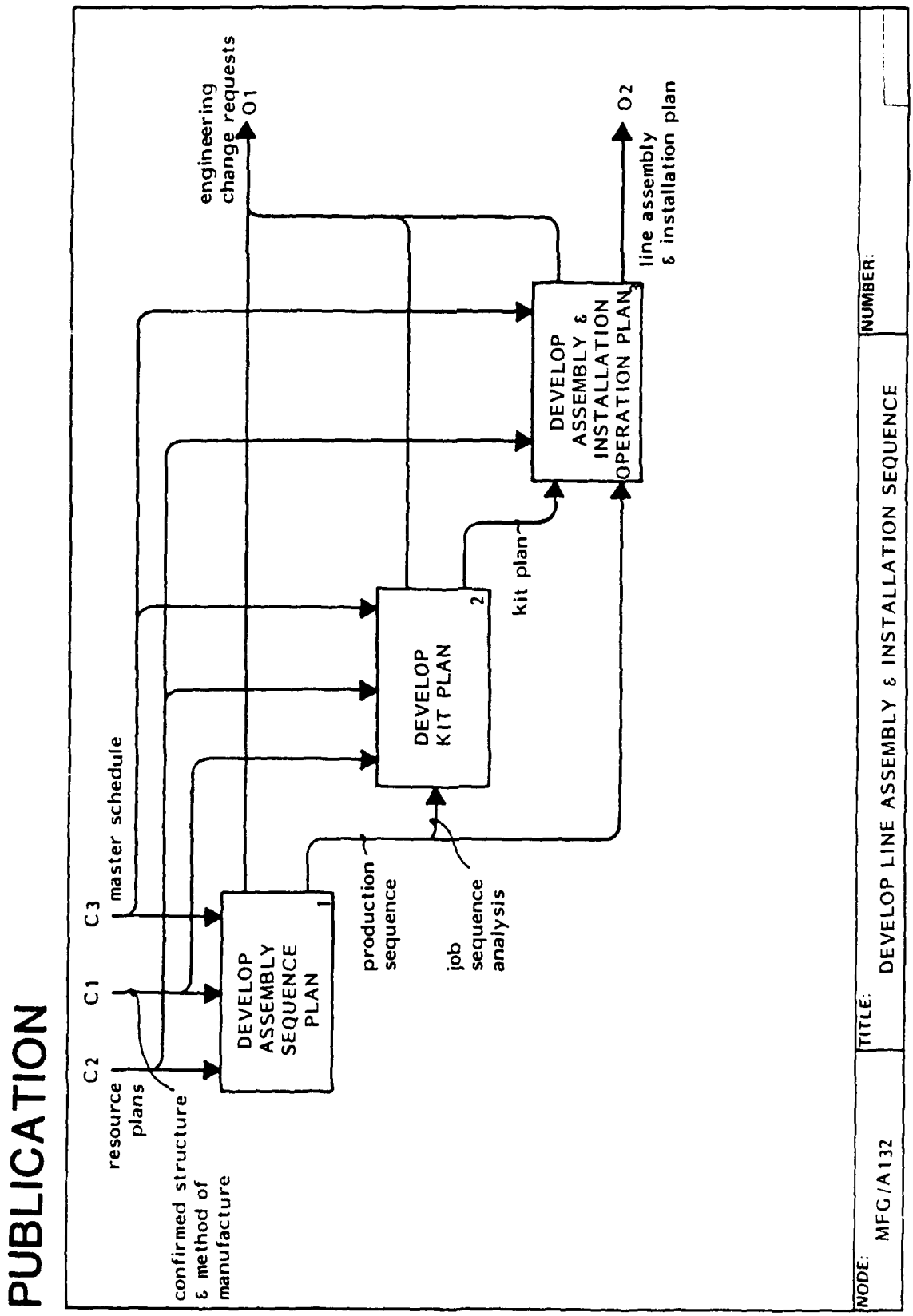
PUBLICATION
C2
resource plans
C1
C3
master schedule
confirmed structure & method of manufacture
DEVELOP ASSEMBLY SEQUENCE PLAN
1
production sequence
job sequence analysis
DEVELOP KIT PLAN
2
kit plan
DEVELOP ASSEMBLY & INSTALLATION OPERATION PLAN
3
engineering change requests
O1
O2
line assembly & installation plan
NODE:
MFG/A132
TITLE:
DEVELOP LINE ASSEMBLY & INSTALLATION SEQUENCE
NUMBER:

PUBLICATION

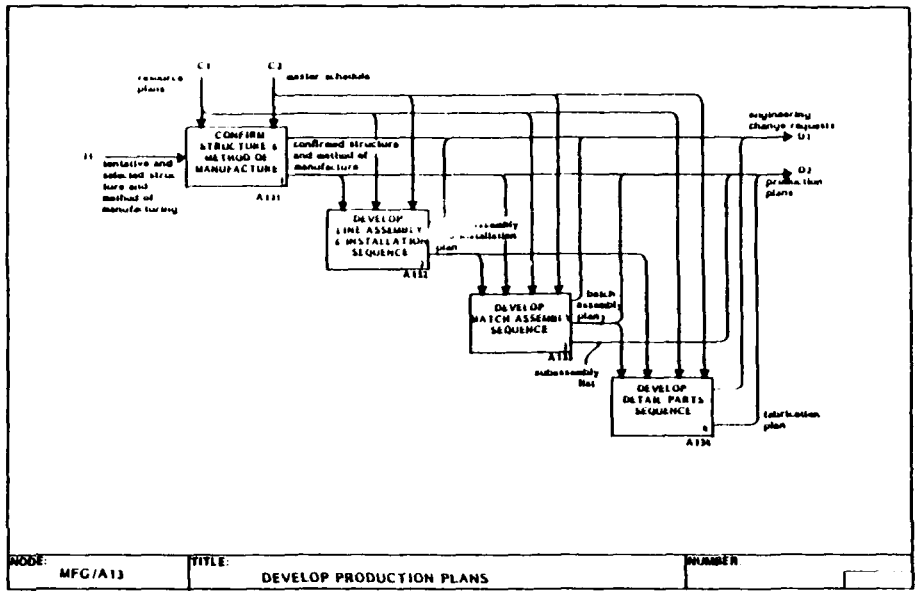

A133 Develop Batch Assembly Sequence

Assemblies are reviewed at the time they are being released for production to determine candidates for batch assembly releases. This is accomplished by analyzing the numbers of assemblies required to support a predetermined build span, complexity, assembly/fabrication hours, etc.. After review, those assemblies considered as batch assemblies are coded/identified and are released to the shop or purchasing accordingly.

Glossary

List of Items at Each Level - List of assemblies, details, etc., to be manufactured or purchased in greater than normal lots due to reduced possibility of engineering change and economical factors.

Assembly Sequence - Logical ordering of assembly operations based on scheduling and economic considerations.

Kit Plan - (See A132 Glossary)

Batch Assembly Plan - Formal plan describing assembly flow and operational sequence of subassemblies and details.

PUBLICATION

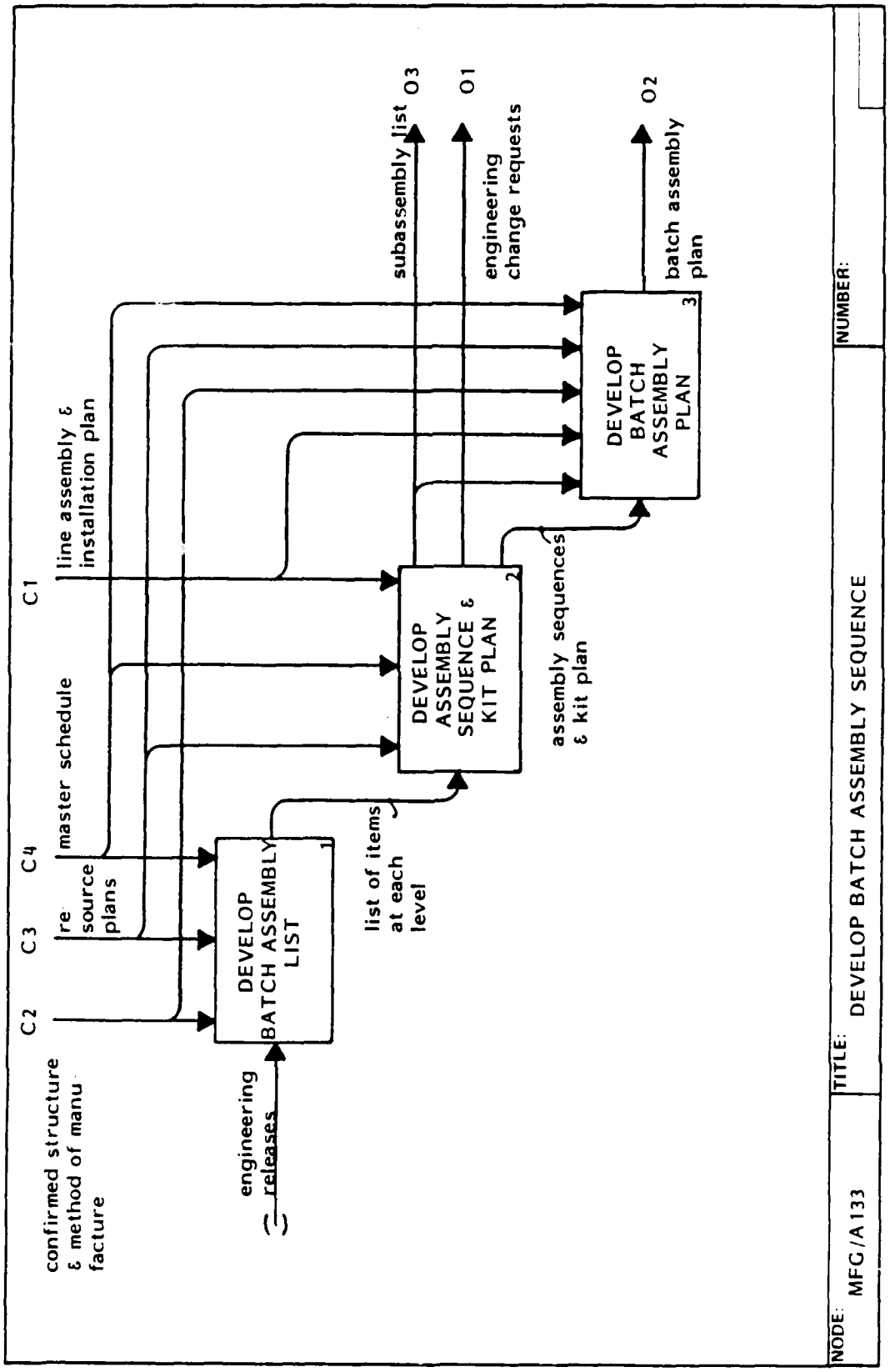

PUBLICATION

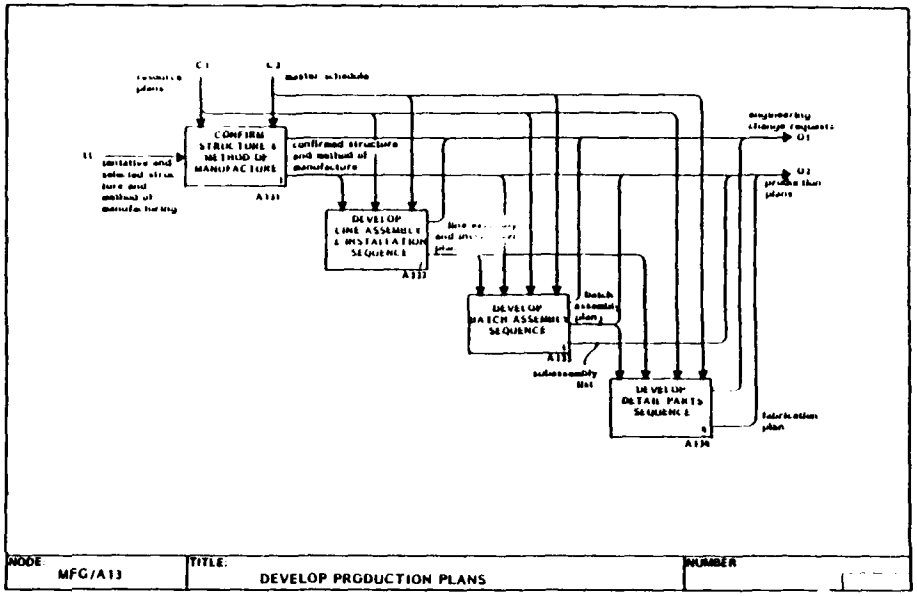

A134 Develop Detail Parts Sequence

A compilation of detail parts by type is developed based on analysis of the WBS, current product design information, and assembly plans (Box 1). A logical sequence of detail parts fabrication is developed based on batch and line assembly support requirements (Box 2). Predicated on the above considerations, a formal detail parts fabrication plan is produced (Box 3).

Glossary

Number of Detail Parts by Type - Numerical listing of parts by category: sheet metal, machined, castings, forgings, composites, hardware, equipment items, etc..

Fabrication Sequence - Logical order of part fabrication/procurement required to support assembly schedules and production flow.

PUBLICATION

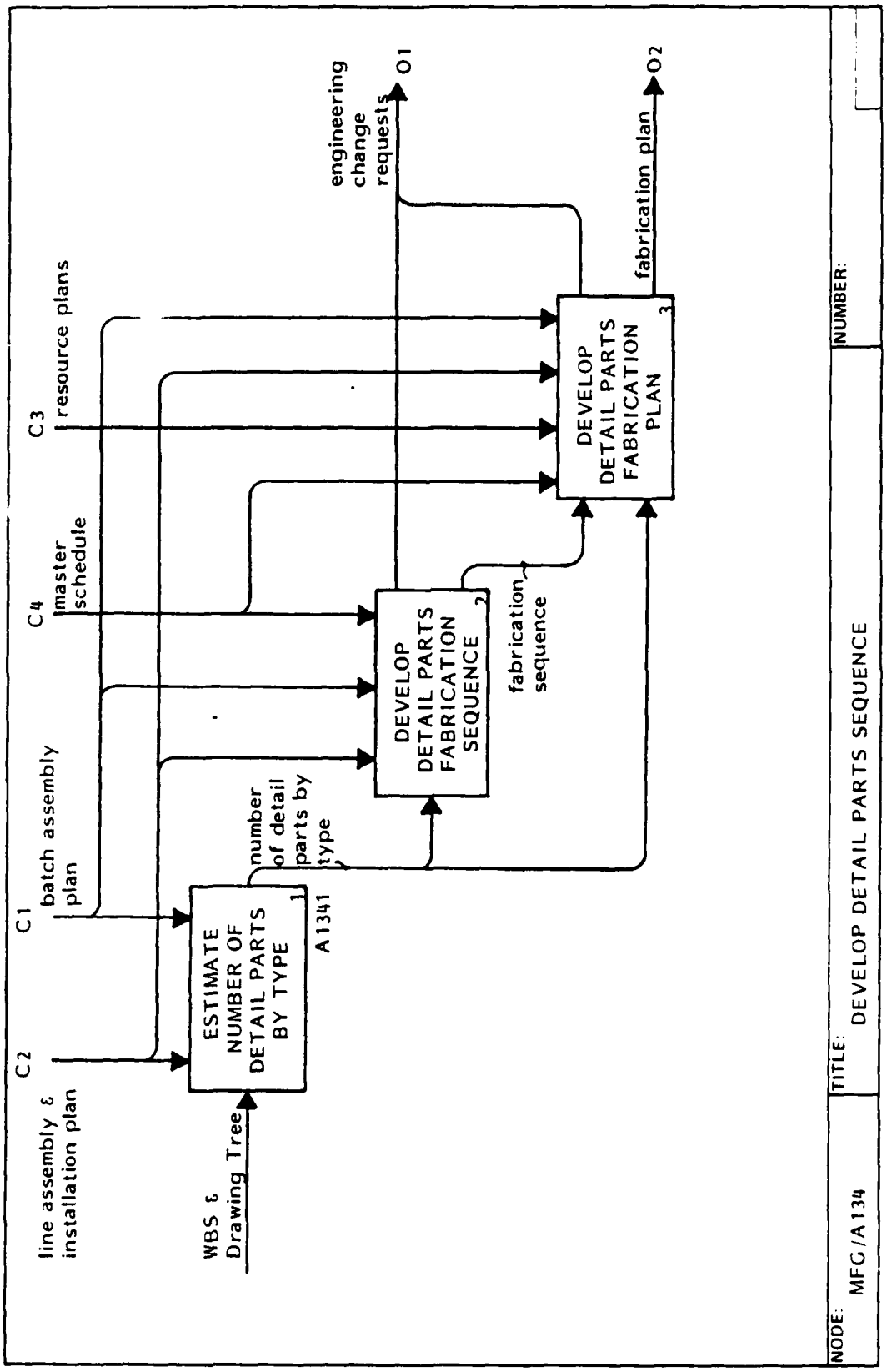

PUBLICATION

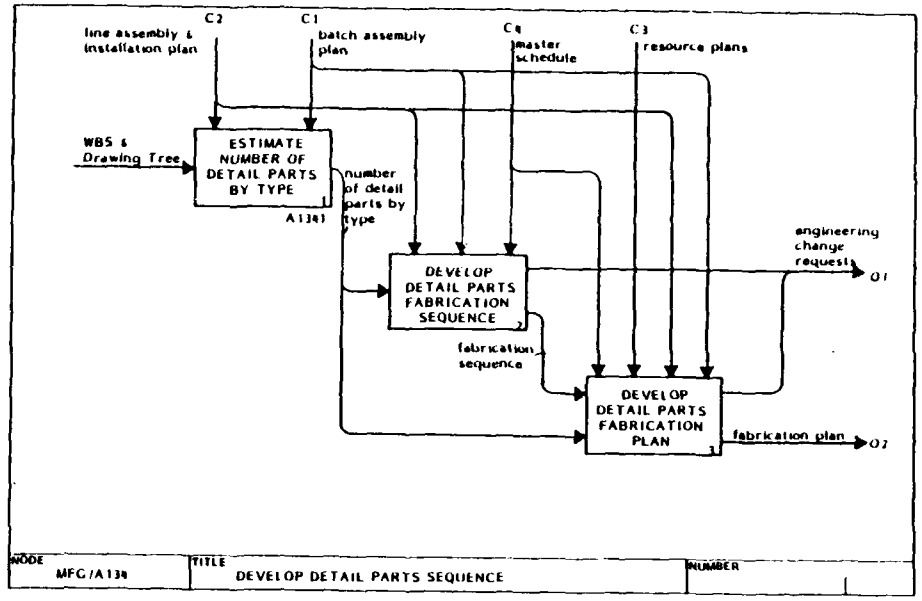

A1341 Estimate Number of Detailed Parts by Type

Detail part quantities are estimated through interpretation of engineering bills of Material Assembly Plans, and segregated on the basis of manufacture or purchase considerations.

Glossary

List of Manufactured Parts - Sheet metal, machined, composite and other fabricated parts listed by category.

List of Purchased Parts - List of parts equipment, hardware, systems and minor subassemblies established as procured items.

Other Types of Parts - Items furnished by the customer, associate contractor or otherwise made available external to the normal procurement or fabrication processes.

PUBLICATION

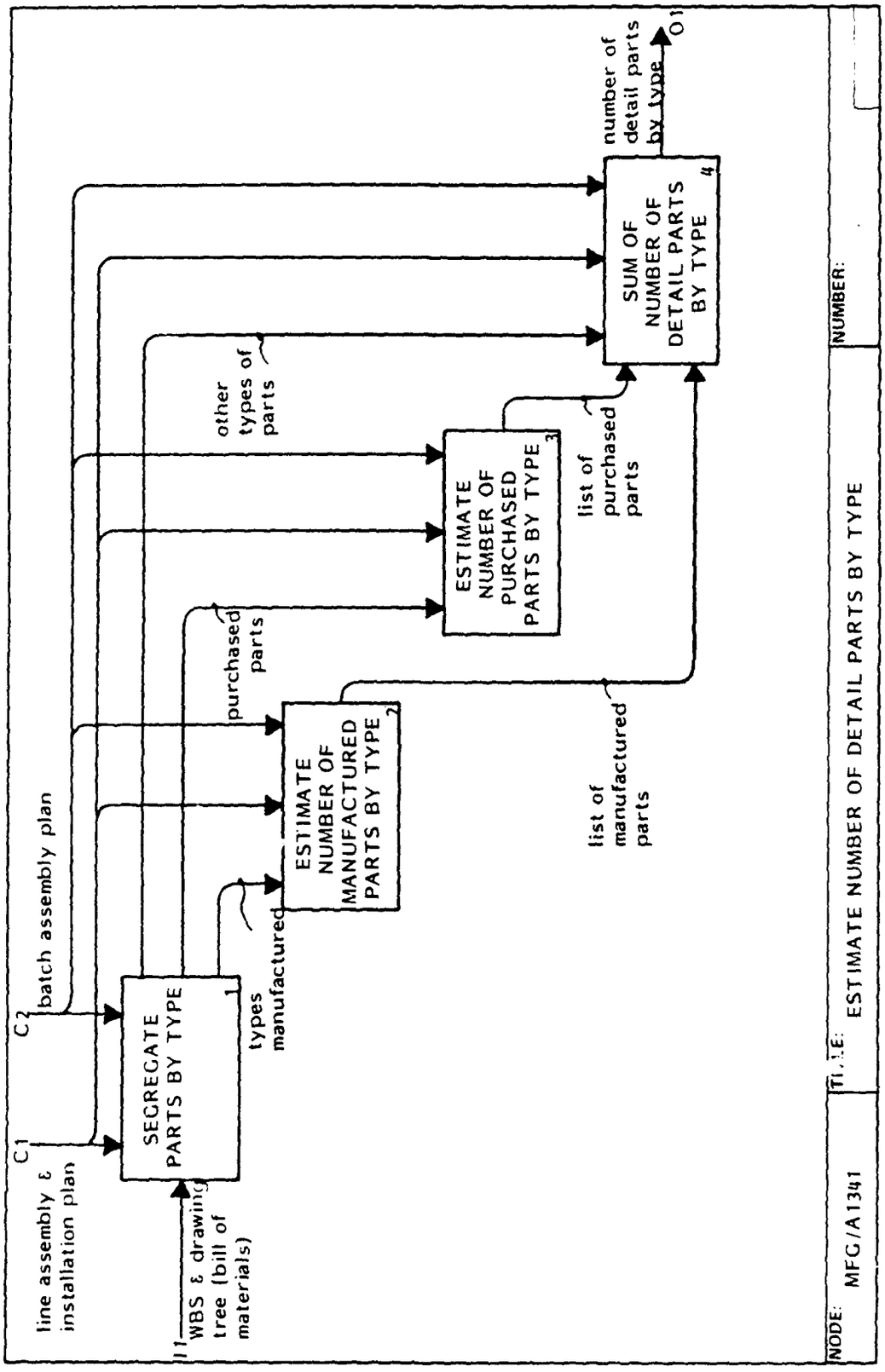

A14 Develop Support Activities Plans

This activity does for manufacturing support what the previous activity (A13) did for the main manufacturing plan. The difference lies in the fact that Activity A13 dealt with making the product, which was ultimately to be shipped out, whereas Activity A14 deals with services in support of that operation, but which do not appear as tangible components of the product.

The input is the main manufacturing plan (from Activity A13); the outputs are plans for quality assurance, materials management, and tooling. Again, needs for engineering changes may be identified.

Glossary

QA Plan (including quality & acceptance testing)
Material Plan
Facilities & Equipment Plan
Personnel Plan

- Supporting manufacturing plans pertaining to quality, materials, tooling, facilities and equipment or personnel requirements, methods and concepts.

PUBLICATION

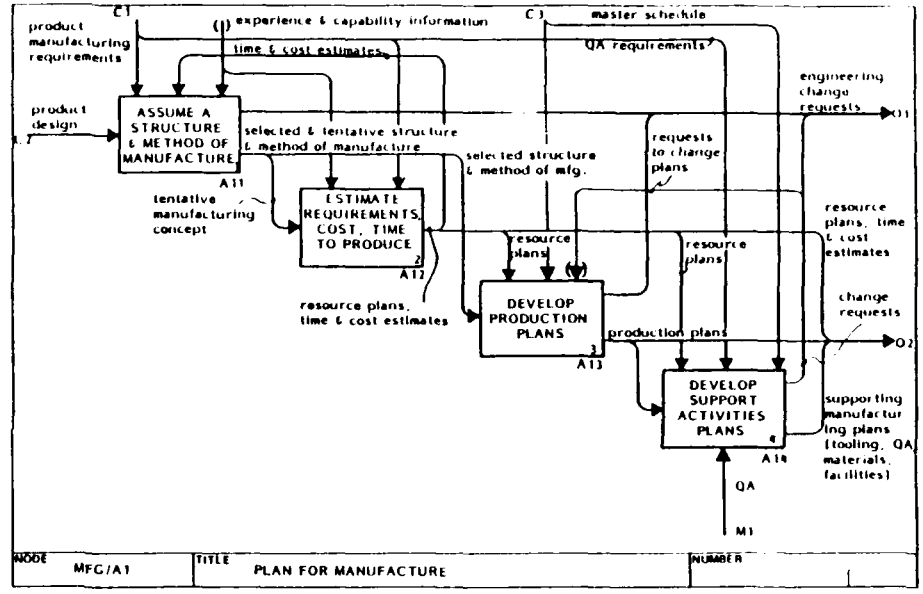

PUBLICATION

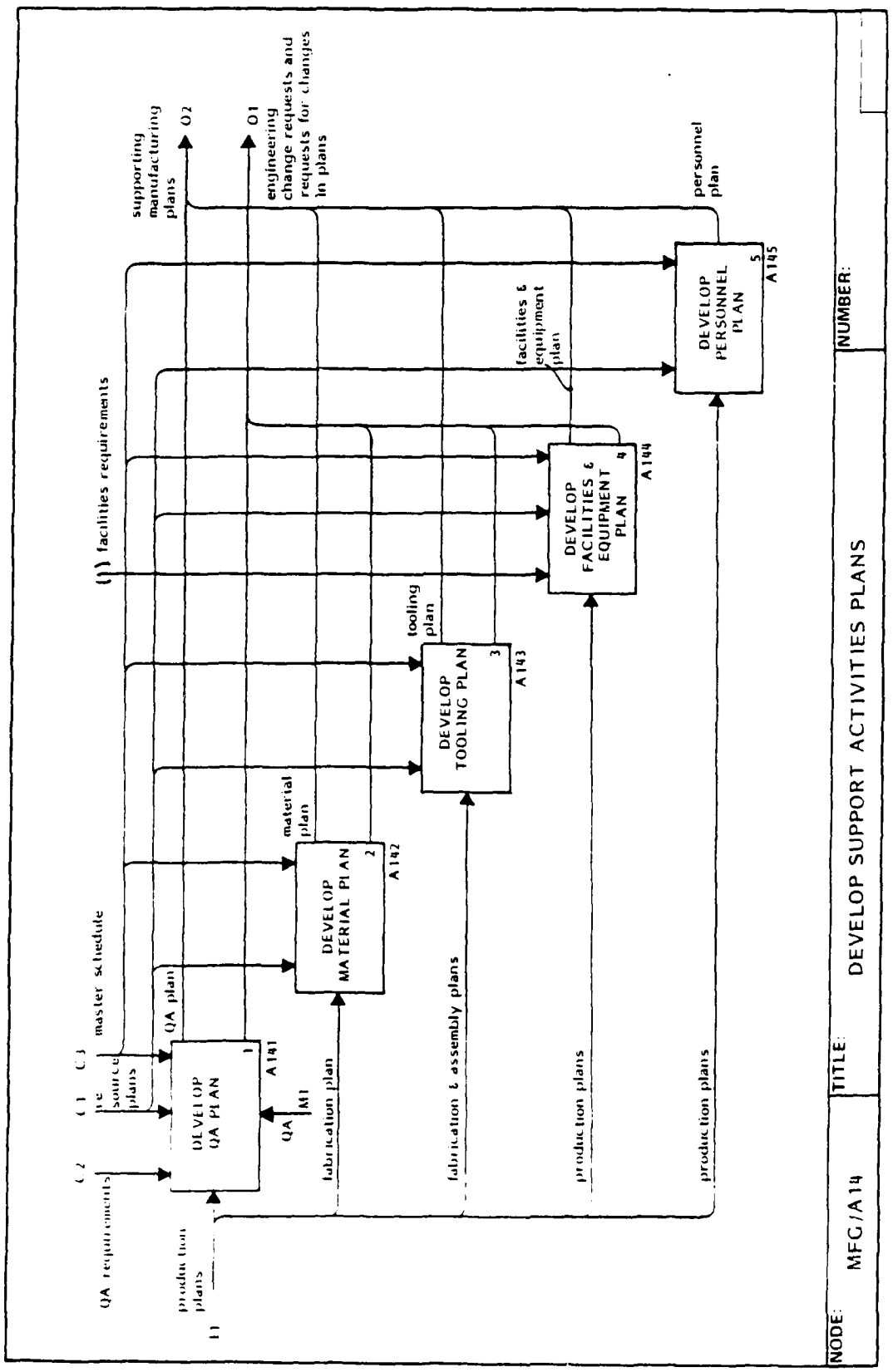

A141 Develop Quality Assurance Plan

This activity is part of the Develop Support Activities Plan and provides the initial plan for Quality Assurance. The primary input is the main manufacturing plan (from activity A13); the output is the Quality Assurance Plan. The need for Engineering Changes is also identified.

Glossary

Production QA Requirements - Work inspection, material review, change verification, receiving inspection, non-destructive testing and other actions required to ensure continuing production of a satisfactory end item.

QA Resource Plan - Testing and measuring equipment, and QA personnel acquisition and training plan to support a production program.

PUBLICATION

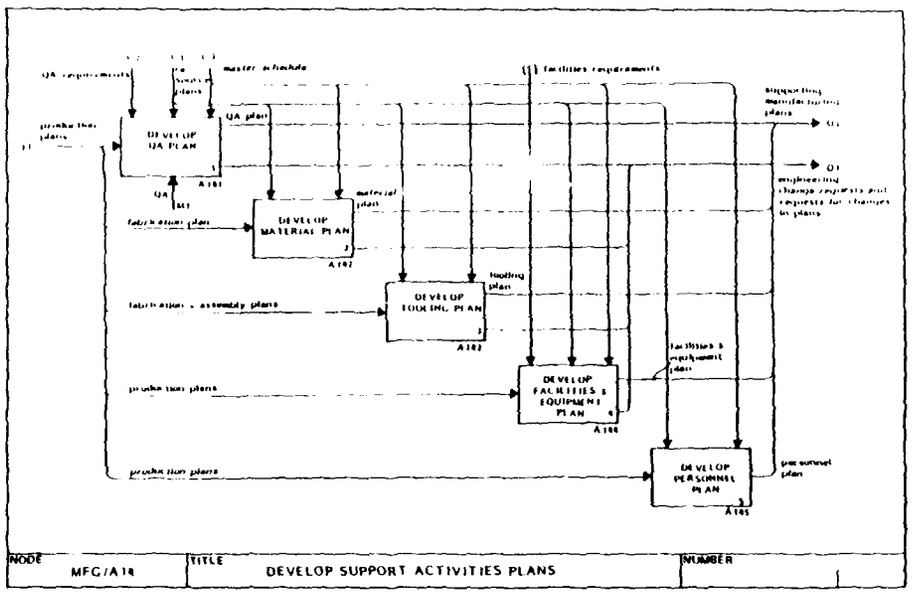

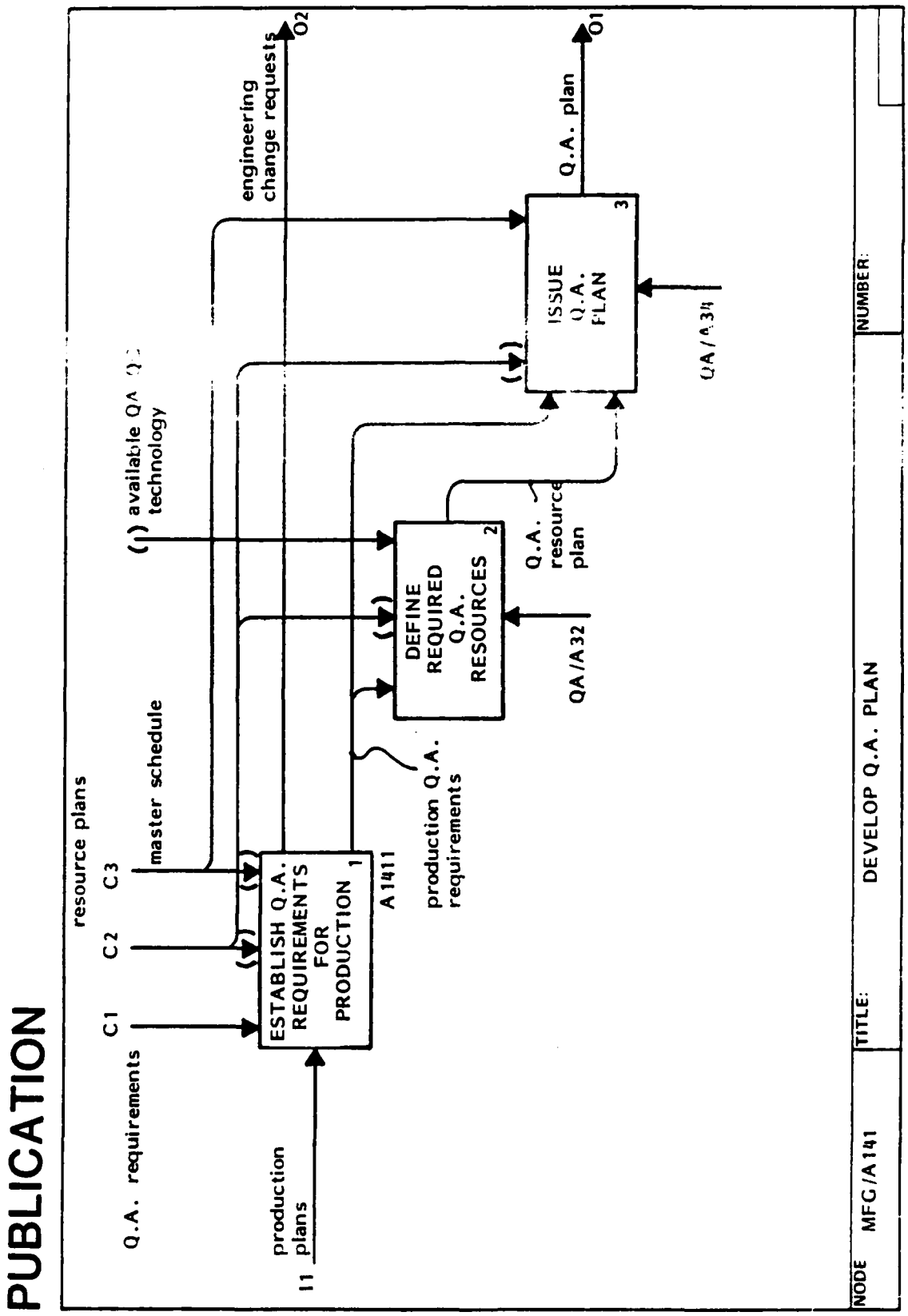
PUBLICATION
Q.A. requirements
C1
C2
C3
resource plans
master schedule
(1) available QA
technology
I1
production plans
ESTABLISH Q.A. REQUIREMENTS FOR PRODUCTION
1
A1411
production Q.A. requirements
DEFINE REQUIRED Q.A. RESOURCES
2
QA/A32
Q.A. resource plan
ISSUE Q.A. PLAN
3
QA/A34
Q.A. plan
O1
engineering change requests
O2
NODE
MFG/A141
TITLE:
DEVELOP Q.A. PLAN
NUMBER:

A1411 Establish QA Requirements for Production

The sequence of activities required to Establish QA Requirements consists of first comparing the QA portion of the contract Statement of Work with the RFP response to identify any changes in requirements. Requirement deviations may result in requests for change to the preliminary design or manufacturing plan or to the draft QA Plan.

The evaluation of the awarded contract is performed by quality assurance personnel who identify the document requirements specified or referenced in a contract to define the minimum acceptable level of quality and to assure adequate controls, criteria and measurement throughout all areas of contract performance. A preliminary QA contract analysis results from this activity.

This analysis is distributed to engineering operations, affected program offices, AFPRO, AFQA, QA department heads, etc., to assure that all parties understand the contract quality requirements and the methods to be used in work inspection, material review, change verification, nondestructive testing

PUBLICATION

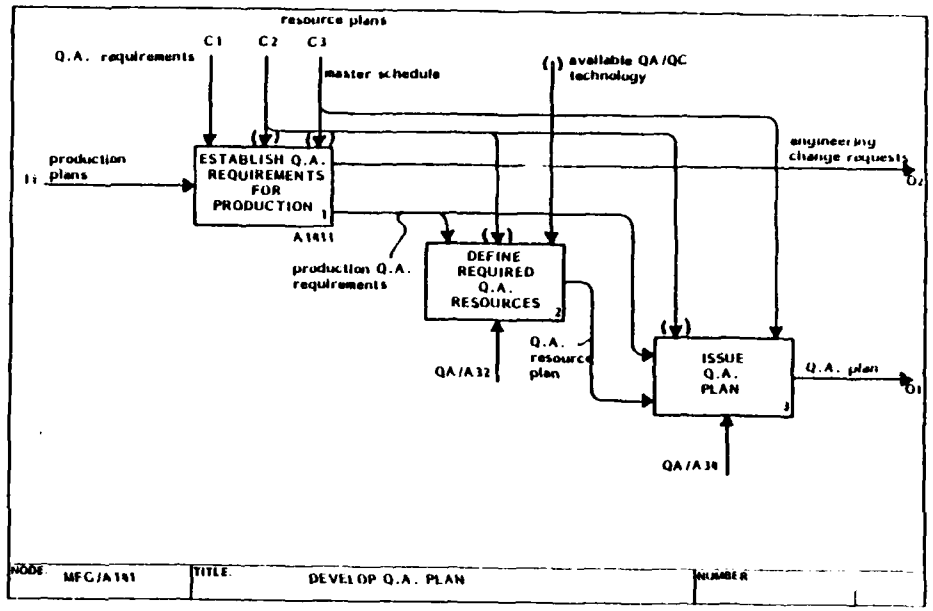

and other actions to ensure continuing production of a satisfactory end item.

Detailed QA Requirements are then issued.

PUBLICATION

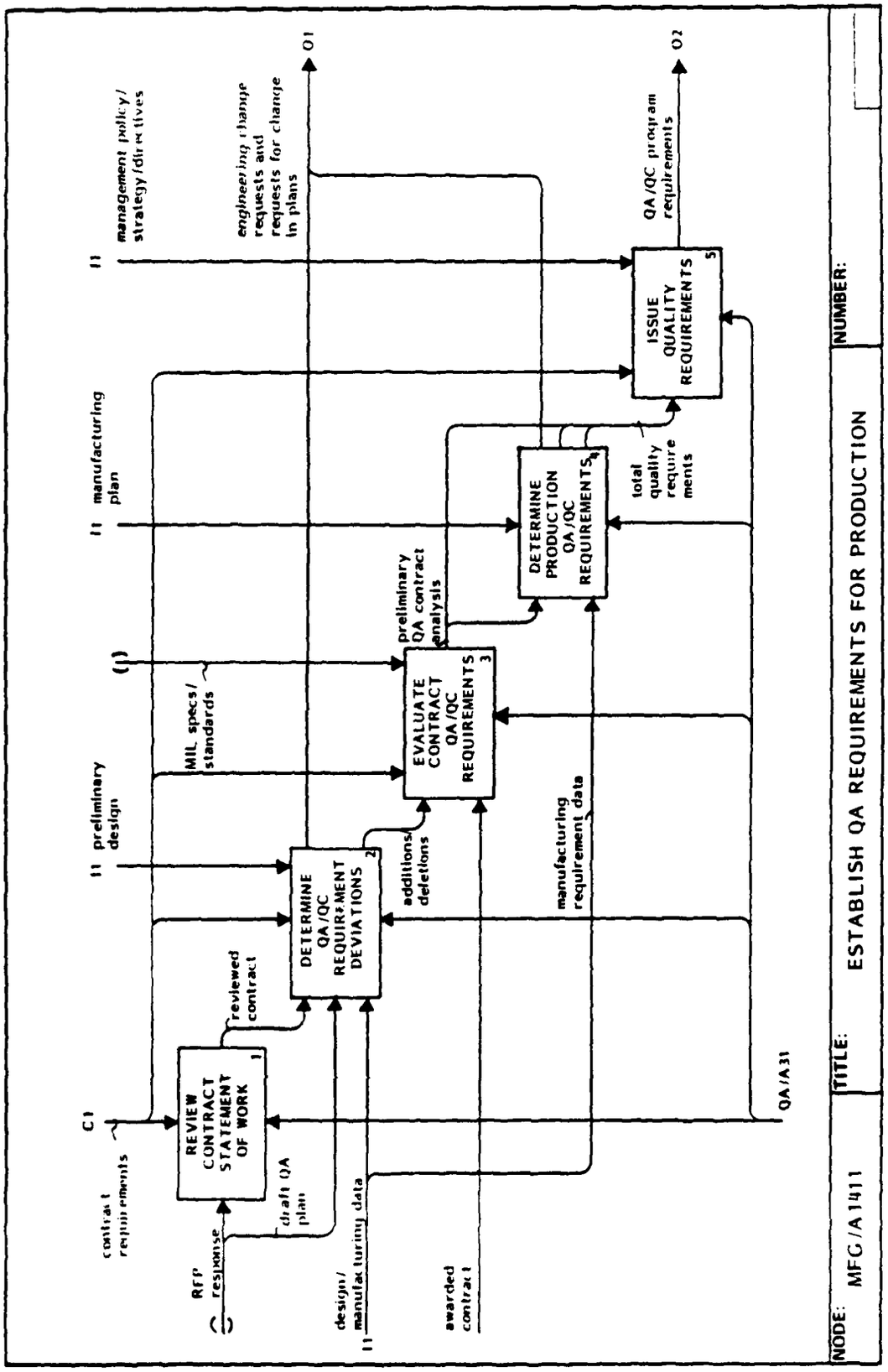

PUBLICATION

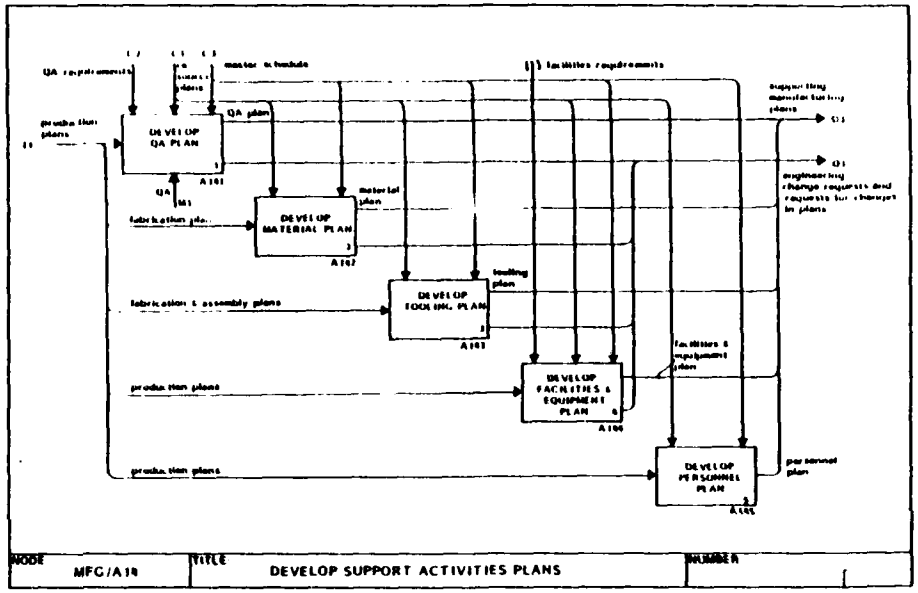

A142 Develop Materials Plan

This activity is part of the Develop Support Activities Plan and provides the initial Materials Plan. The primary input is the Fabrication Plan and the output is the Material Management Plan. The need for Engineering Changes is also identified.

Glossary

Material Plan - Plan includes such items as major subcontract items to be purchased, first level make or buy plan, long term or critical items to be purchased, sole source items, etc.

Material Breakdown Illustration - Exploded pictorial depiction of the product with shaded codings representing the material comprising the basic air frame structure (e.g., aluminum, titanium, composites, etc.).

Critical Material Items - Purchased components which are identified as being critical due to complexity and/or length of acquisition time.

Load Lead Milestones - Date(s) at which time critical material items must be ordered to support subsequent schedule events and milestones.

Long Lead Materials - Identification of specific parts which must be ordered prior to execution of the normal requisitioning process.

Preliminary Subcontract Plan - Identification of major "buy" subassemblies, systems and equipments by subcontractor/supplier where determined.

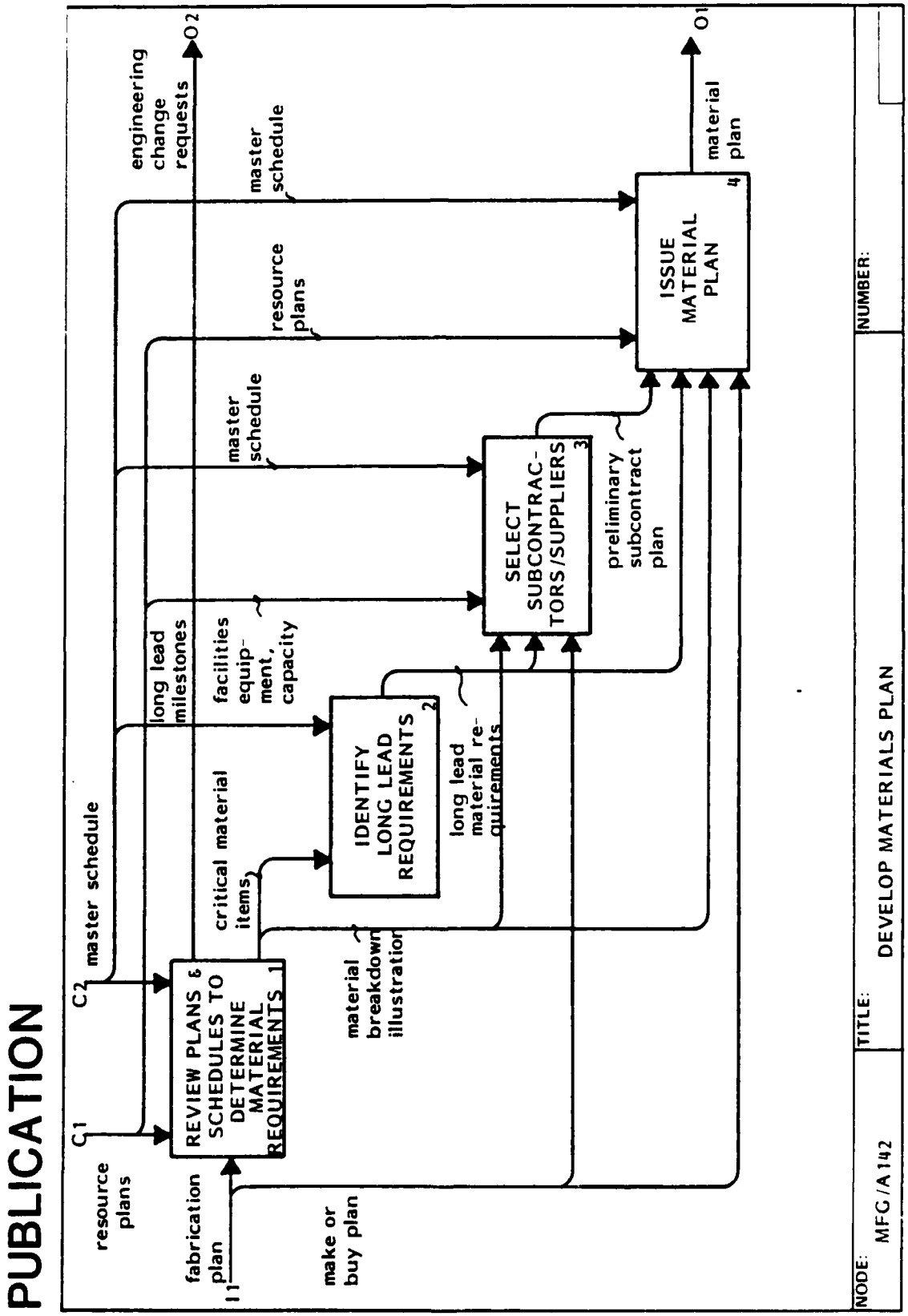
PUBLICATION
C1
resource plans
C2
master schedule
I1
fabrication plan
REVIEW PLANS & SCHEDULES TO DETERMINE MATERIAL REQUIREMENTS 1
critical material items
long lead milestones
engineering change requests
O2
IDENTIFY LONG LEAD REQUIREMENTS 2
facilities equip-ment, capacity
material breakdown illustration
long lead material re-quirements
SELECT SUBCONTRAC-TORS/SUPPLIERS 3
master schedule
make or buy plan
preliminary subcontract plan
resource plans
master schedule
ISSUE MATERIAL PLAN 4
material plan
O1
NODE:
MFG/A142
TITLE:
DEVELOP MATERIALS PLAN
NUMBER:

PUBLICATION

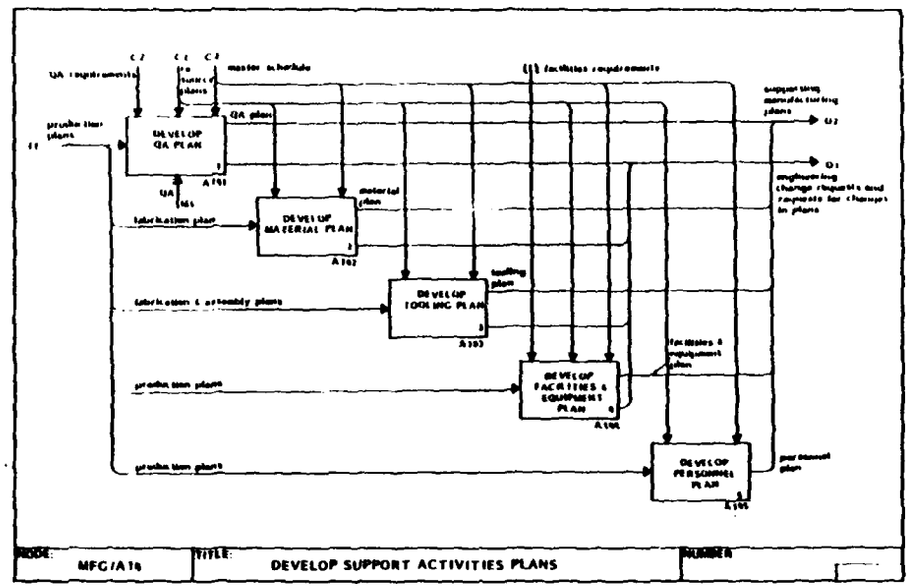

A143 Develop Tooling Plan

This activity is part of the Develop Support Activities Plan and provides the initial Tooling Plan. The primary input is the Fabrication and Assembly Plan and the outputs are the Tooling Plan and Request for Engineering Changes.

Glossary

Tooling Approach (Policy) - Decisions on building hard or soft tooling and make or buy.

Project Tools Identified - Assembly floor mounted tools and other tools unique to the program/project.

Long Lead Tools Identified - Specific tools which must be obtained (made or bought) prior to execution of the normal requisitioning process.

Non-Project Tools Identified - Portable tools such as drill motors, rivet guns, torquing tools, etc.; durable tools such as grinders, drill presses, seam welders, etc.; perishable tools such as drill bits, taps, drill cutters, reamers, etc.; and other tools common to multiple program/project usage.

PUBLICATION

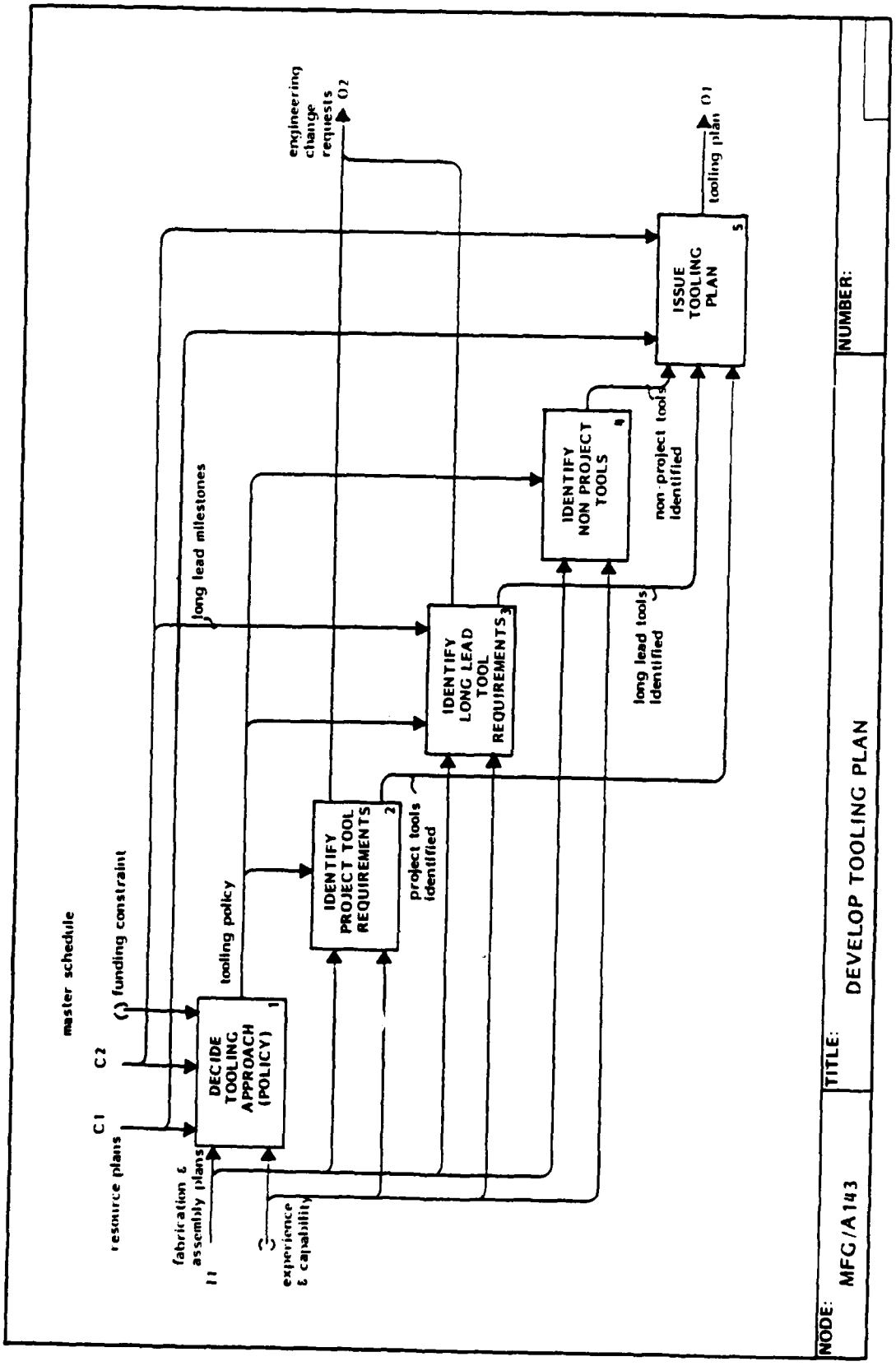

PUBLICATION

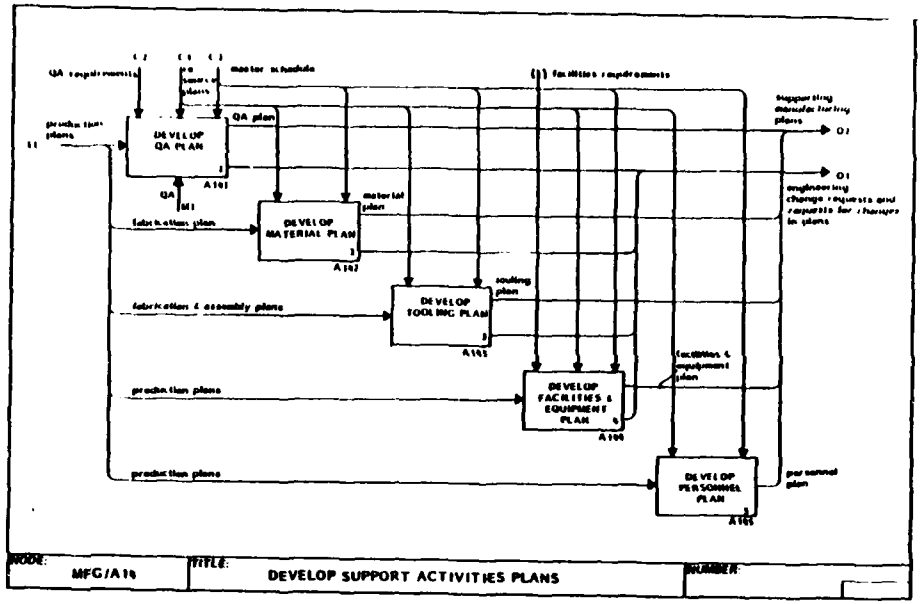

A144 Develop Facilities & Equipment Plan

This activity is part of the Develop Support Activities Plan and provides the initial Facilities & Equipment Plan. The input is the Production Plans and the outputs are the initial Facilities & Equipment Plan and Request for Engineering Changes.

Glossary

Facilities & Equipment Policy - Early decision on what facilities & equipment are required, including make or buy.

Long Lead Facilities & Equipment Identified - Specific new facilities and industrial equipment which must be obtained (made or bought) prior to execution of the normal requisitioning process.

Special Facilities & Equipment Identified - Identification of those items of facilities and equipment, other than long lead items, which are required to support manufacture of a product, the need for which are over and above available, existing facilities and equipment.

Preliminary Estimate - Initial cost estimate of facilities and equipment.

Funding Constraint - Contract, capital and other funds available.

PUBLICATION

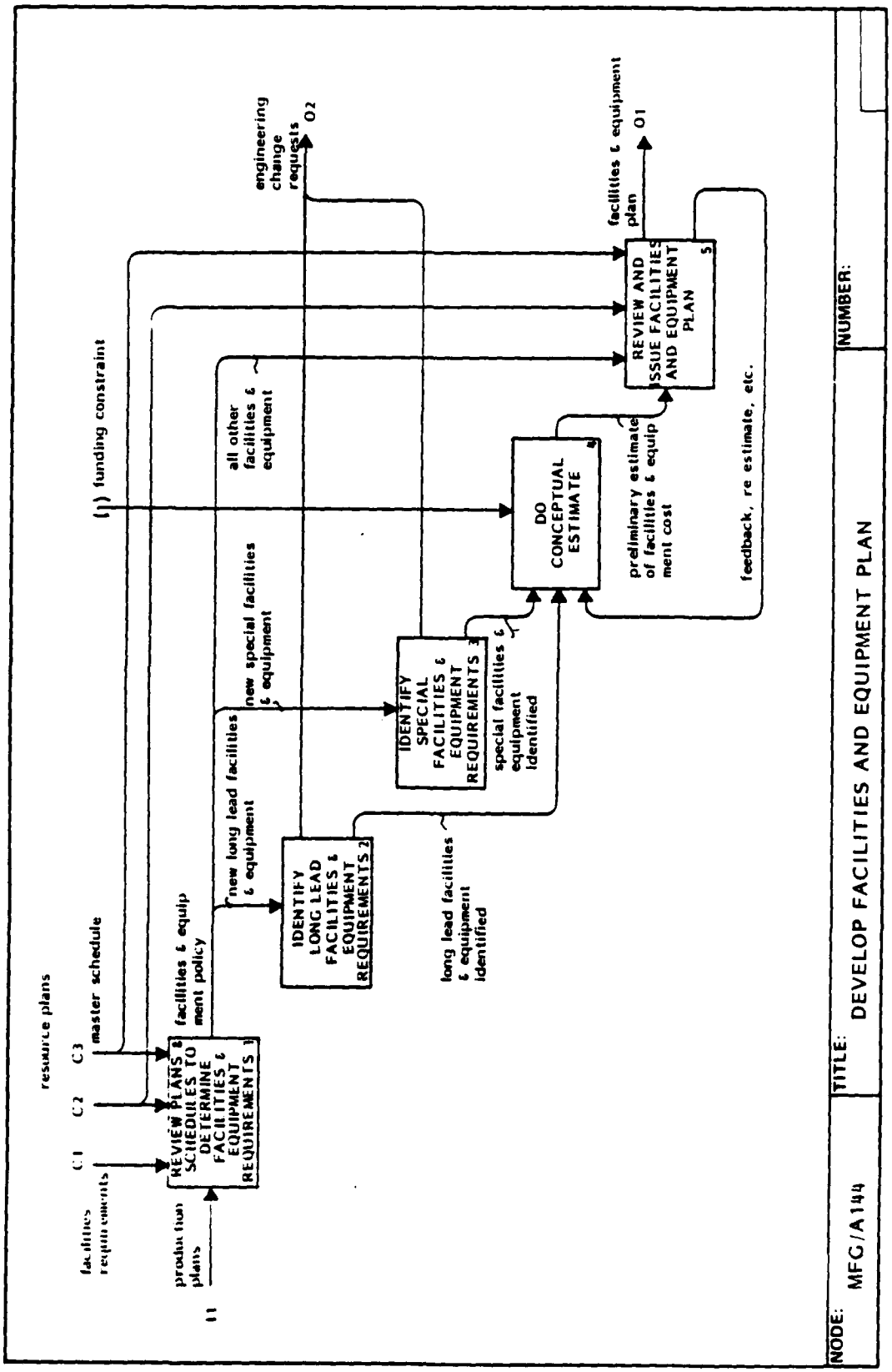

A145 Develop Personnel Plan

This activity is part of the Develop Support Activities Plan and provides the initial Personnel Plan. Inputs are the Production Plans and current workforce information and the output is the Personnel Plan.

Glossary

Basic Manpower Requirements - Staffing levels and skills mix requirements for the manufacture of a particular product.

Current Workforce Information - Numbers of presently enrolled personnel, departmental levels, skill mix, present workloads and related data.

Hire Plan - Time phased plan for acquisition of new employees, including recruitment, testing, and placement considerations.

Training Plan - Plan for the indoctrination and instruction of new employees and the upgrading and ongoing education of existing employees to meet job skill requirements.

PUBLICATION

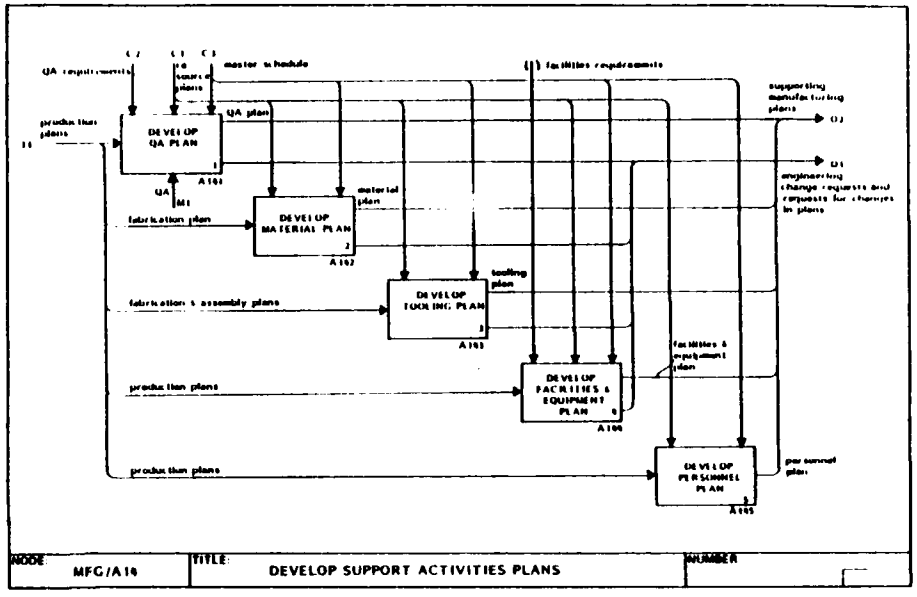

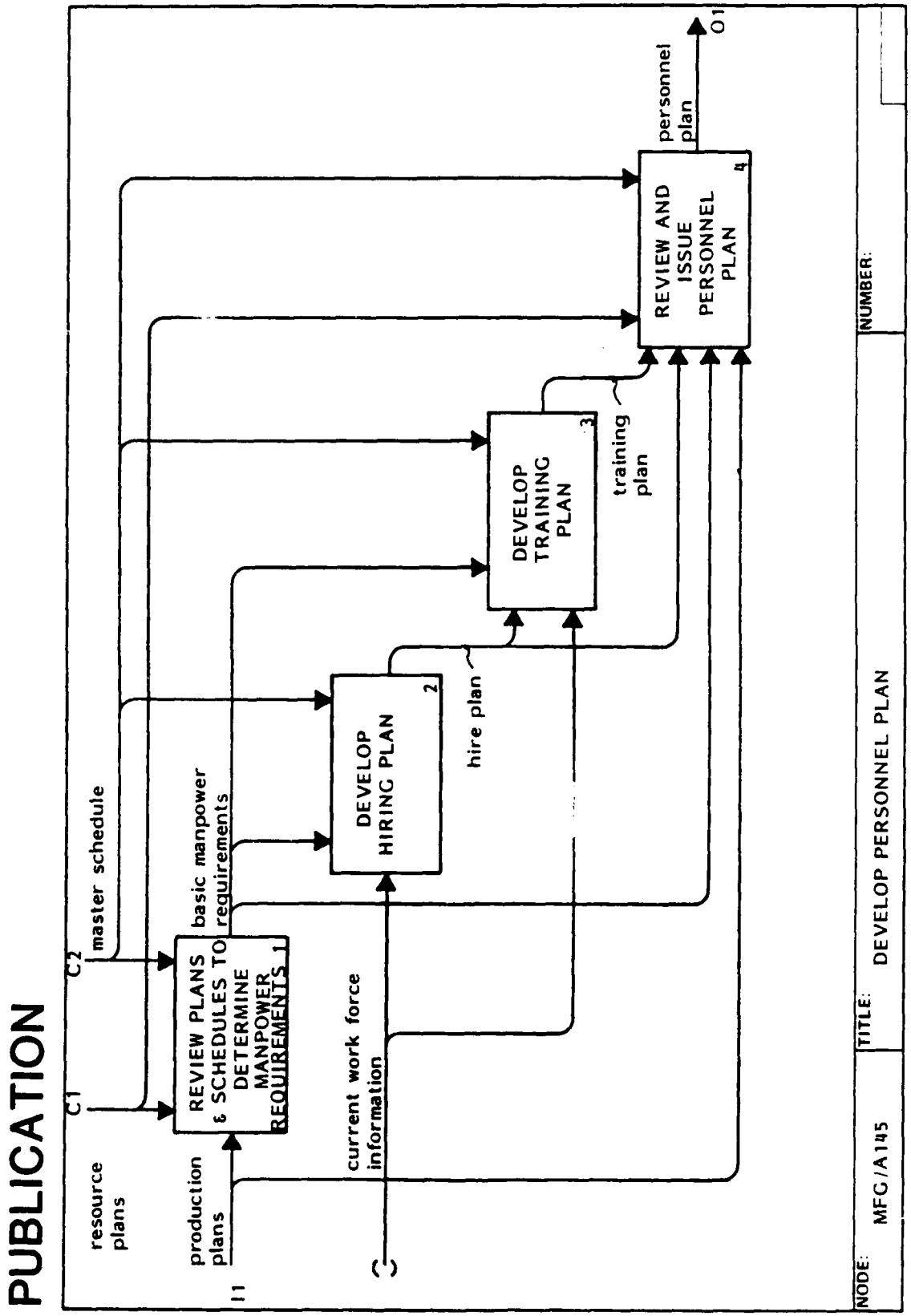
PUBLICATION
resource plans
C1
I1
C2
master schedule
production plans
REVIEW PLANS & SCHEDULES TO DETERMINE MANPOWER REQUIREMENTS 1
basic manpower requirements
current work force information
DEVELOP HIRING PLAN 2
hire plan
DEVELOP TRAINING PLAN 3
training plan
REVIEW AND ISSUE PERSONNEL PLAN 4
personnel plan
O1
NODE: MFG/A145
TITLE: DEVELOP PERSONNEL PLAN
NUMBER:

PUBLICATION

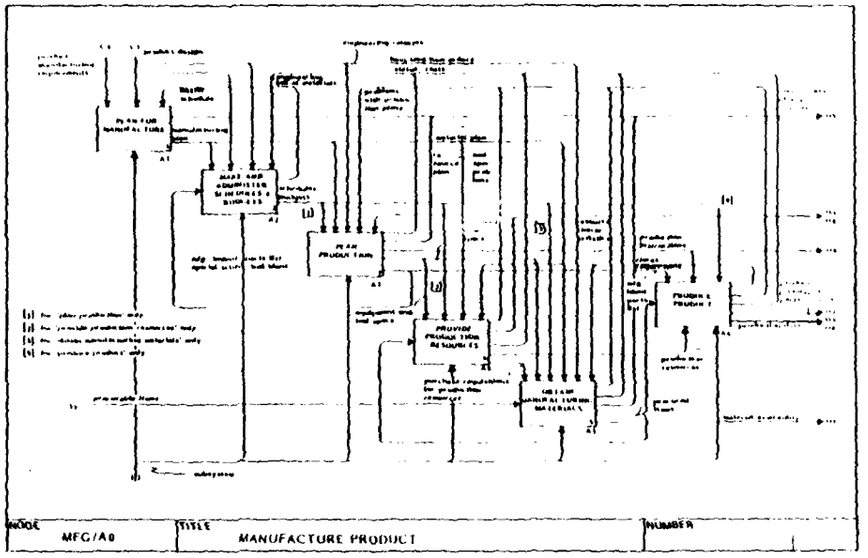

A2 Make and Administer Schedules and Budgets

Working from the production schedule requirements (mainly delivery dates), the WBS (Work Breakdown Structure), and the manufacturing plans (preliminary versions), a master schedule showing the time spans of major events is produced.

This master schedule is expanded using (initially) the engineering parts list and (finally) the manufacturing indentured parts list and tool identifications to produce coordinating schedules which give the (negotiated) need dates for those items which interface between A3, A4, A5, and A6 (e.g., the manufacturing instructions, facilities and equipment, manpower, materials).

The manufacturing plans and schedules are used to estimate costs, which are combined with the product budget requirements to produce the budgets and accounting scheme for the project.

Throughout the project, actual costs and times are monitored, and when necessary, the need for revisions to schedules or budgets are identified and fed back. Schedules and budgets are also revised whenever revised production requirements (C2) or revised manufacturing plans (C1) arrive.

Note that only those schedules which coordinate other activities are handled here. There is further detailed scheduling for parts planning, resource providing, material control, and production control.

Glossary

Master Schedule - Establishes major milestones and phasing to accomplish task.

Coordinating Schedules - Schedules which show required completion dates for items which pass between engineering, planning, materials, resources and production (e.g., engineering releases, production plans, tool specifications, tools, equipment,

PUBLICATION

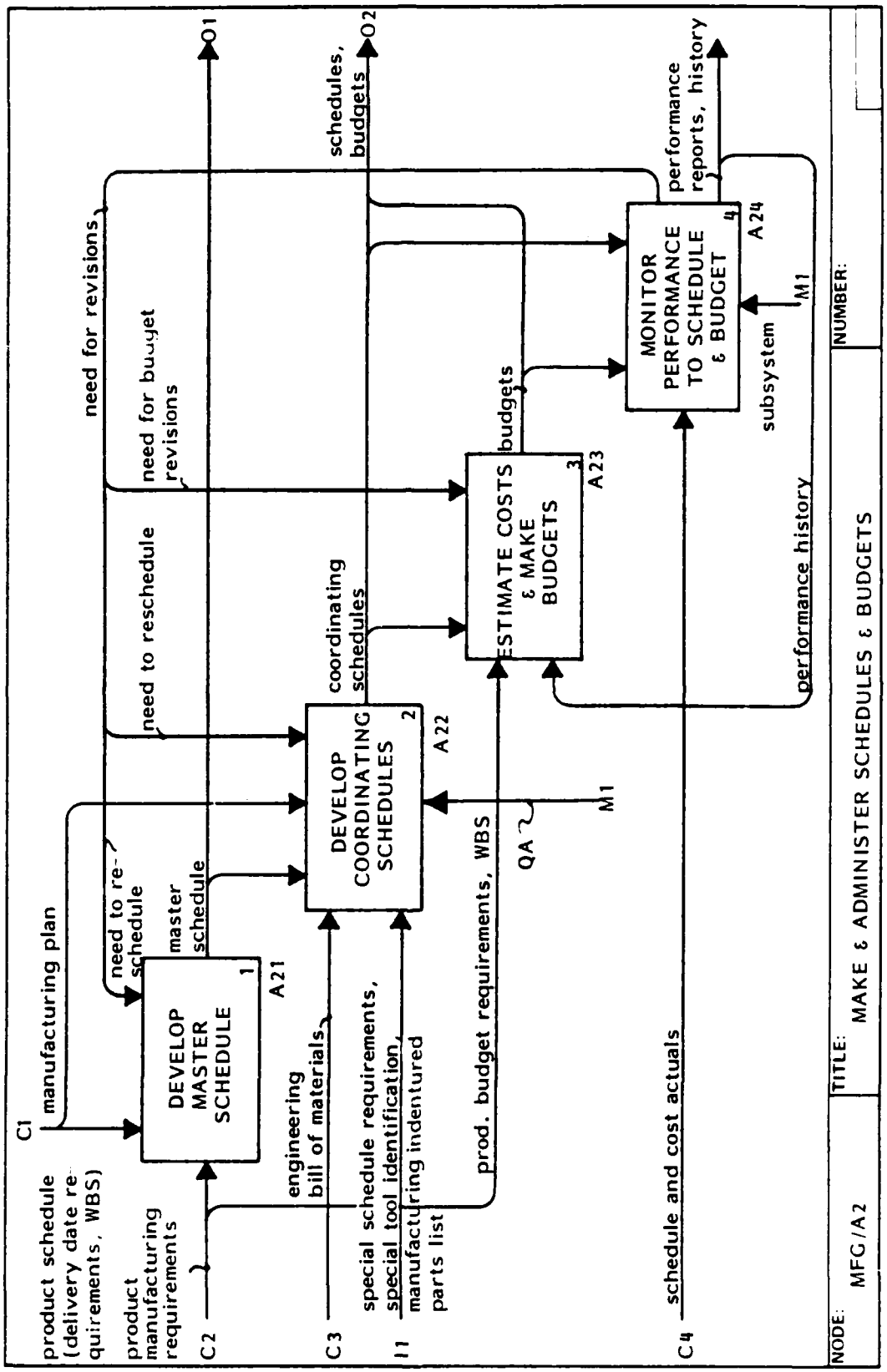

A2 Glossary (con't.)

procured material specs, procured materials, etc.) These items are identified to the level necessary for coordination of the efforts (often identified by group -- e.g., all tools for all indenture 3 details to the XYZ assembly).

NOTE: There are lower level "departmental schedules" in A3, A4, A5, A6 which detail these schedules to control internal (to those boxes) activities.

WBS - Work Breakdown Structure - An identification of the major tasks of the contract.

Need for Revisions - Identification of some problems in manufacturing which require a change to coordinating schedules or budgets or (more rarely) the master schedule. These would only be problems that could not be resolved by adjustments to "departmental schedules".

A21 Develop Master Schedule

The work breakdown structure, from I1, is converted in "Apply Time Spans" (Box 1), into the estimated times for the WBS items. These in turn are integrated into preliminary versions of the master schedule (Box 2). The next step is to compare the preliminary master schedule with the delivery schedule to identify and to then resolve any conflicts (Box 3 and Box 4, respectively). Any re-estimated or negotiated times are fed back from this process to Box 1. The output of Box 4, completed master schedule, is then sent to management for their approval.

Glossary

Flow Plan - Sequence of product WBS elements such as key parts, sub and major assemblies, and final assembly installations to produce an orderly progression of product build-up.

SOW - Statement of Work - Refinement of WBS elements as discrete technical tasks.

Estimated Times for WBS Items - Preliminary elapsed time span for WBS elements "Most Likely" times at this point in schedule development.

PUBLICATION

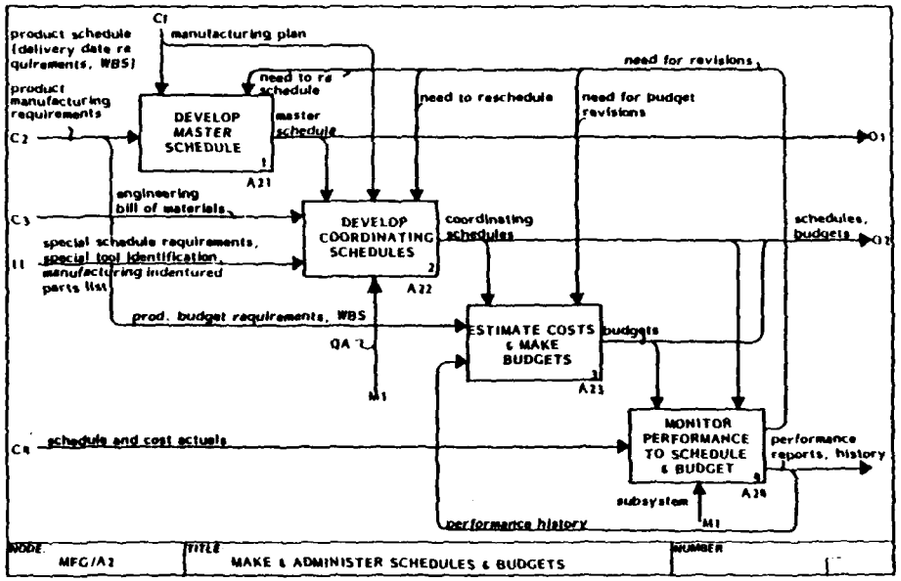

Preliminary Master Schedule - Major milestones and events. Requires review by functional personnel.

Schedule Conflicts - Possible threats to conformance of preliminary master schedule. May be uncovered during review of schedule by functional personnel.

Completed Master Schedule - Requires program and/or corporate approval. Conflicts have been resolved by negotiation or by program mandate.

Master Schedule - Operating document. Bears appropriate approvals. All subsequent schedules emanate from this.

PUBLICATION

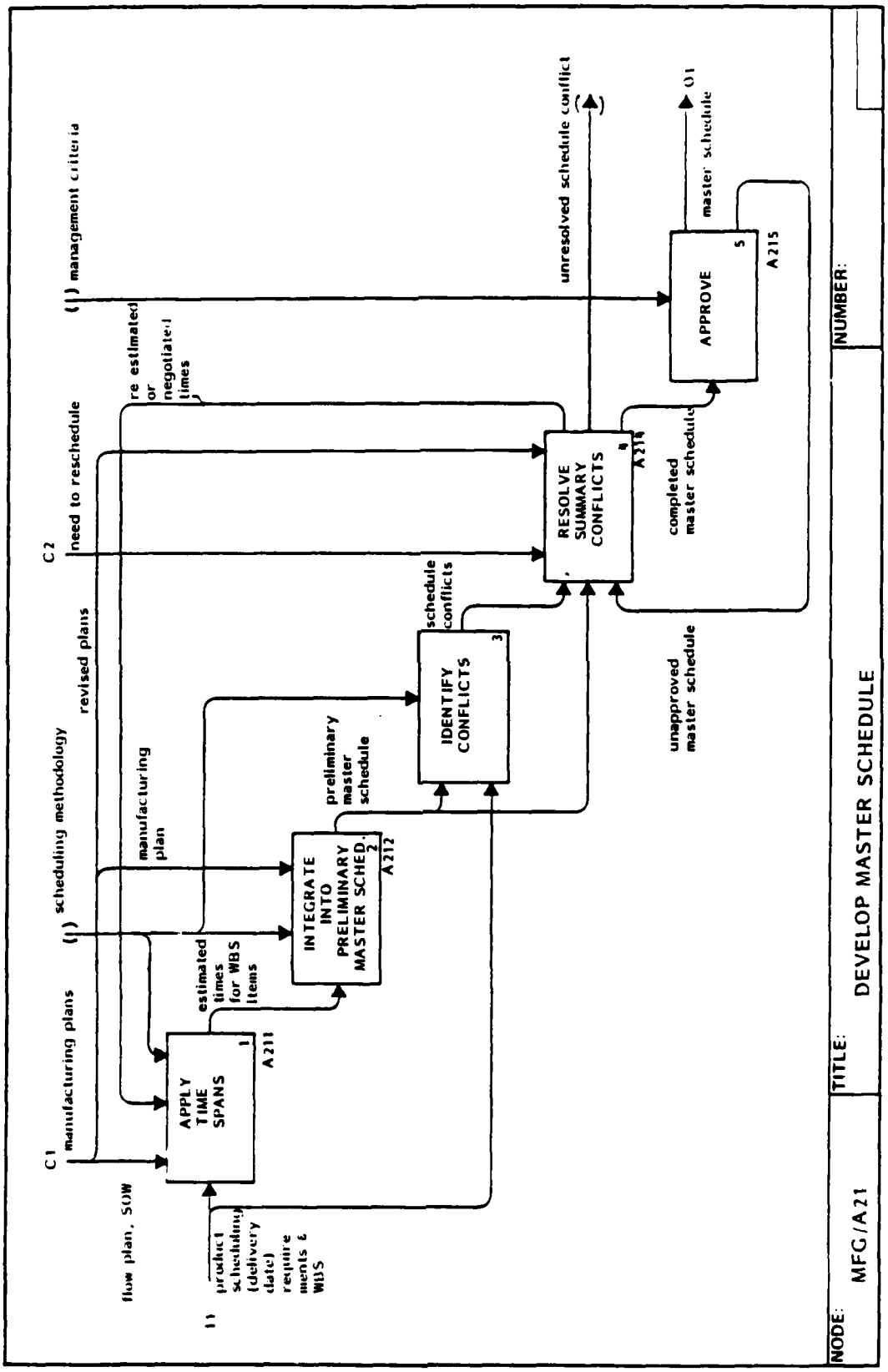

A21 Glossary (con't)

Delivery Schedule - End item schedule. Negotiated between customer and corporate officials.

Need to Reschedule - (Obvious)

Re-estimted or Negotiated Times - (Obvious)

Scheduling Methodology - Various approaches to systematically displaying tasks. Each company's developed systems, involving their standards for span times, sequencing logic, constraints, coordination, approval and release.

Unresolved Schedule Conflicts - Those descrepancies which cannot be resolved through negotiation and which can only be settled by a higher authority mandate or by a change in plans.

A211 Apply Time Spans

The product schedule and the manufacturing plan are assessed to determine the overall time phasing of the engineering effort and its relationship of manufacturing. (Box 1) - The output is utilized in Boxes 2 through 4 to develop the general time spans for the categories depicted. The development of procurement leadtimes (Box 2) and resources leadtimes (Box 3) is influenced by the output of Box 1 (engineering release milestones), C1, Manufacturing Flow Plan and SOW, and past experience/historical data on similar products. Current industry averages (firm quotes if available) on similar items are also utilized to establish the procurement leadtimes. Fabrication leadtimes (Box 4) and assembly and installation leadtimes (Box 5) are derived by first analyzing the requirements as defined in C1, and categorizing them into groups according to type and estimated complexity, e.g., sheet metal, machine parts, electrical assemblies, conventional structural assemblies, etc. Once the groupings are defined, leadtimes are applied based upon past experience on similar products, industry historical data and factory developed standards.

PUBLICATION

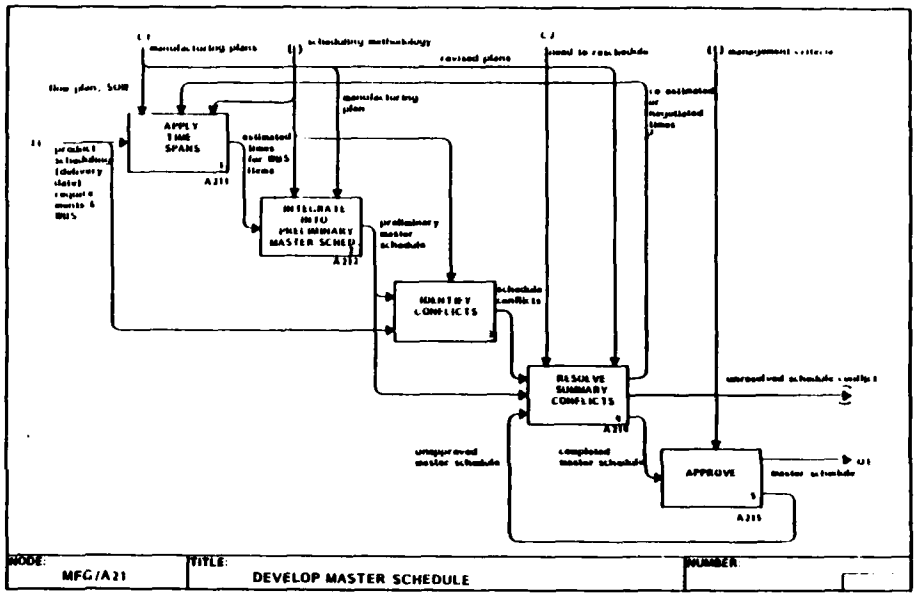

The time spans developed in Boxes 2 through 4 are then utilized in the preliminary master schedule integration.

Glossary

Engineering Drawing Release Milestones - Estimated points in time for accomplishment of major engineering design events.

Estimated Times for Procurement WBS Items - Estimated start and completion dates for procurement of material required to support production at each major end item.

Estimated Times for Resources WBS Items - Estimated start and completion dates for tool design and

PUBLICATION

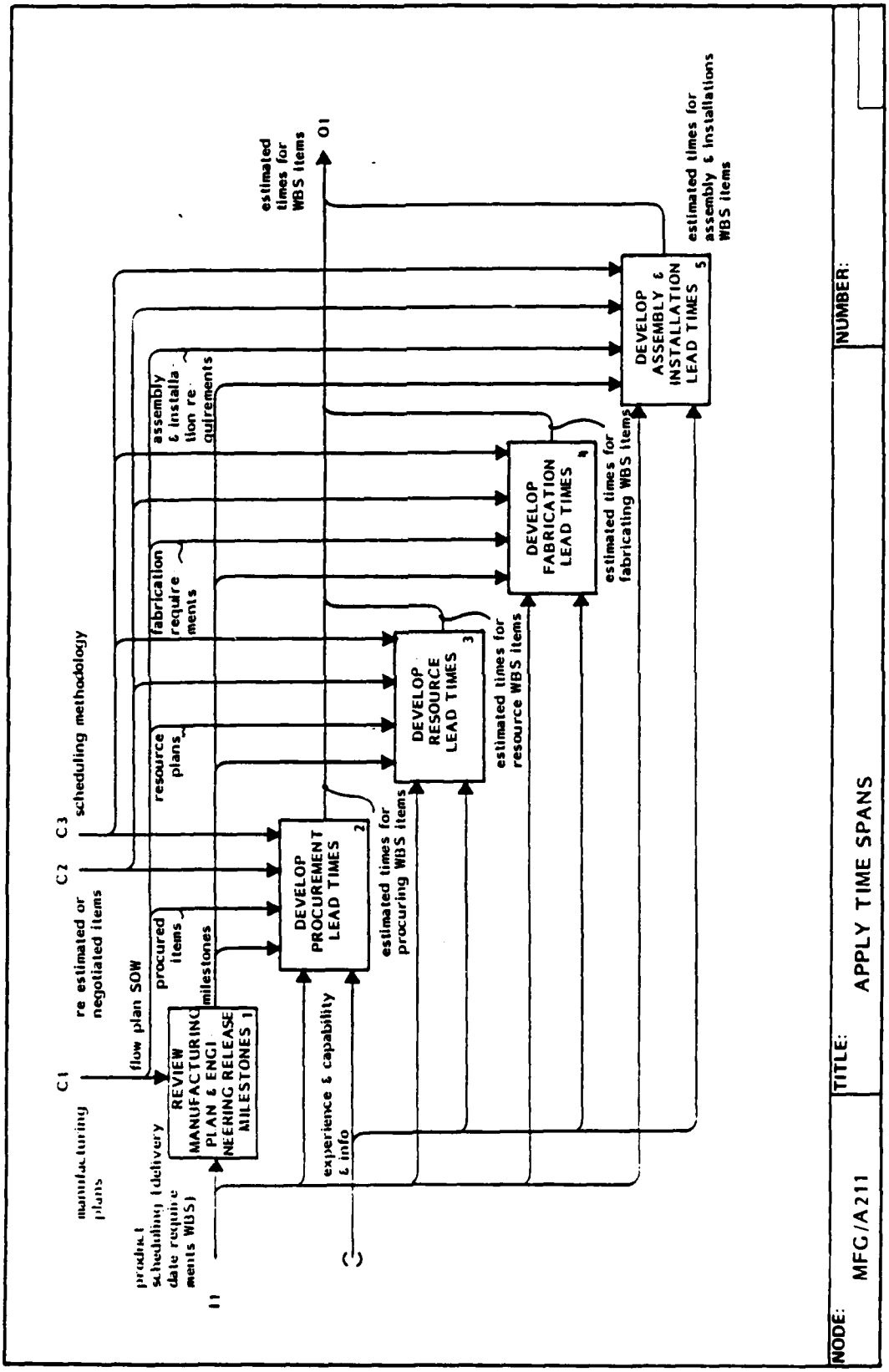

A211 Glossary (con't)

fabrication and manufacturing planning required to support production of each major end item.

Estimated Times for Fabrication WBS Items - Estimated start and completion dates for detail fabrication and sub-assembly of the components of each major end item.

Estimated Times for Assembly and Installation WBS Items - Estimated start and completion dates for assembly, installation and checkout for each major end item.

A212 Integrate into Preliminary Master Schedule

Information from the manufacturing SOW, estimated time spans for WBS items, and the product schedule is reviewed to develop the logical sequence of events and activities to be displayed on the master schedule. Once the general logic is determined, a layout of the time spans is constructed which takes into consideration spans which must be serial, spans which may have overlaps with each other, and spans which may be done in parallel and independent of each other. From this layout, the preliminary master schedule is prepared in accordance with scheduling methodology, established procedures, formatting guidelines, and unique requirements imposed by the particular program being planned.

Glossary

Sequence Time Spans - Logically determined interrelationship of time-spans, i.e., serial and parallel activities.

Time Span Layout - Initial bar chart layout of major milestones and events.

PUBLICATION

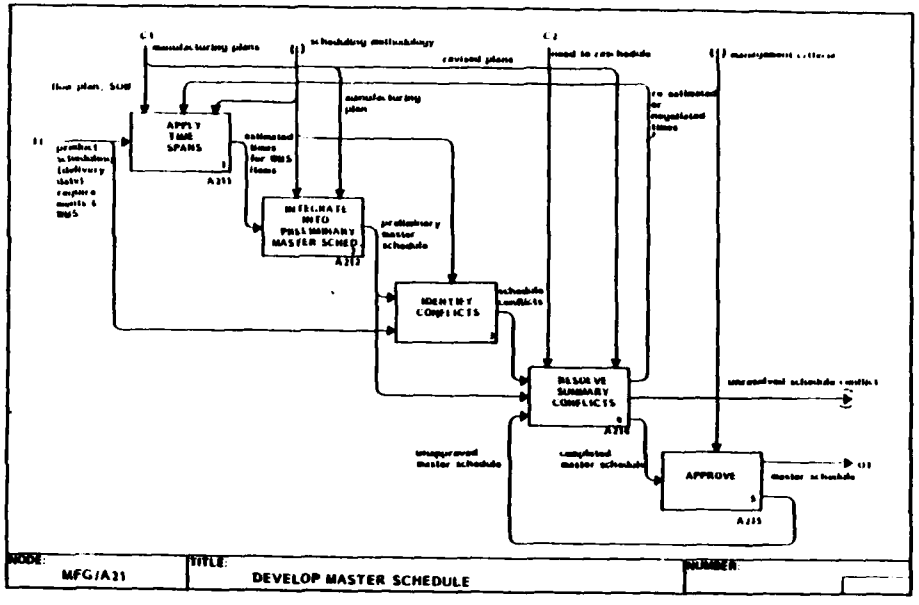

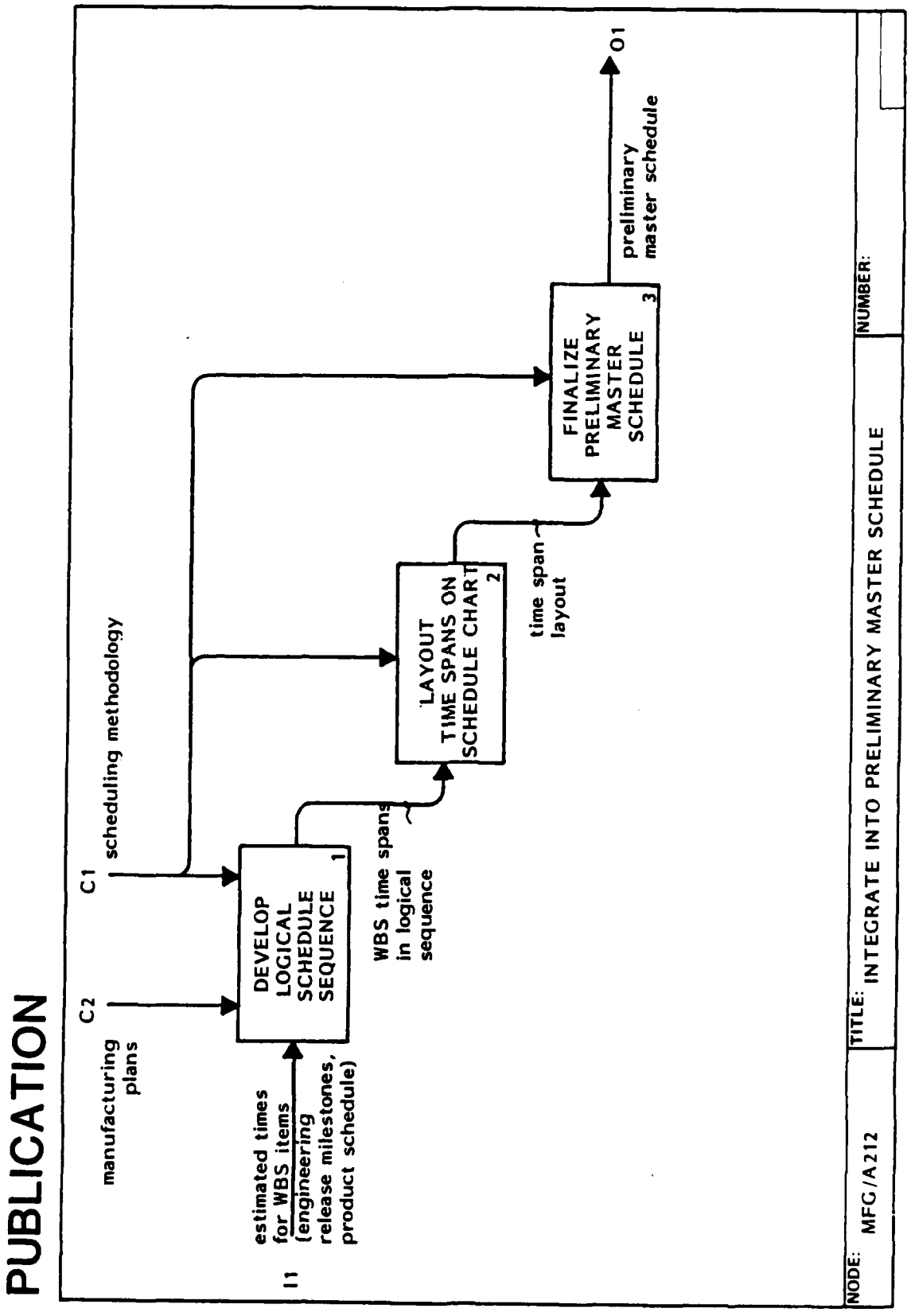
PUBLICATION
C1
scheduling methodology
C2
manufacturing plans
I1
estimated times for WBS items
(engineering release milestones, product schedule)
DEVELOP LOGICAL SCHEDULE SEQUENCE
1
WBS time spans in logical sequence
LAYOUT TIME SPANS ON SCHEDULE CHART
2
time span layout
FINALIZE PRELIMINARY MASTER SCHEDULE
3
O1
preliminary master schedule
NODE:
MFG/A212
TITLE:
INTEGRATE INTO PRELIMINARY MASTER SCHEDULE
NUMBER:

A213 Identify Master Schedule Conflicts

The preliminary master schedule is reviewed by functional management to identify conflicts within their respective functions as well as conflicts with interfacing or supporting functions. A customer review may also take place to assure that the preliminary schedule has correctly interpreted the requirements of the delivery schedule, product schedule, SOW, CDRL, etc.

Glossary

Potential Areas of Conflict - Apparent schedule discrepancies identified during reviews with performing functions.

Contractual Conflicts & Responsibilities - Identified schedule discrepancies between preliminary master schedule and contractual requirement dates, and organization(s) responsible for resolution.

Resource Conflicts & Responsibilities - Identified discrepancies between tooling and planning start dates, lead times, and manufacturing need dates, and organization(s) responsible for resolution.

PUBLICATION

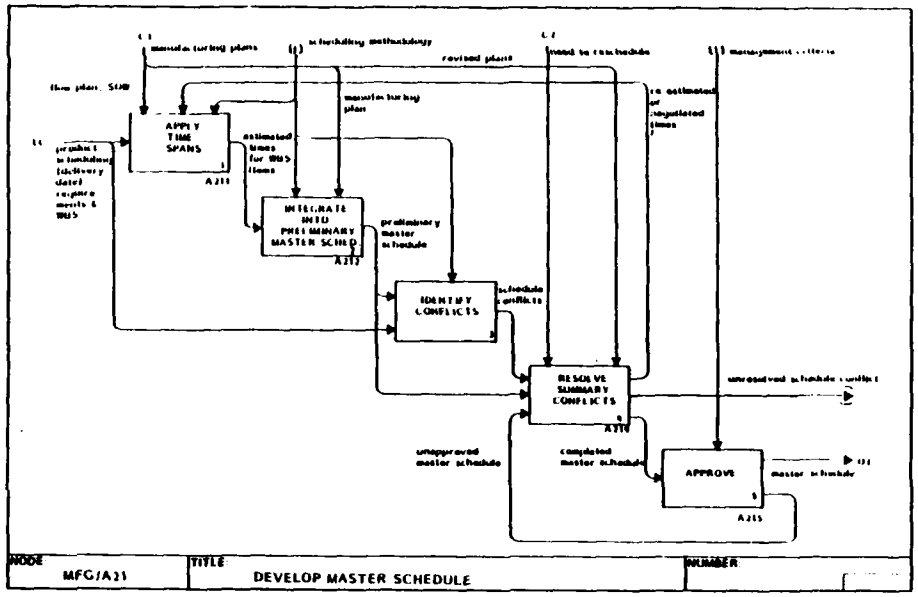

Procurement Conflicts & Responsibilities - Identified discrepancies between material procurement start dates, lead times and manufacturing need dates, and organization(s) responsible for resolution.

PUBLICATION

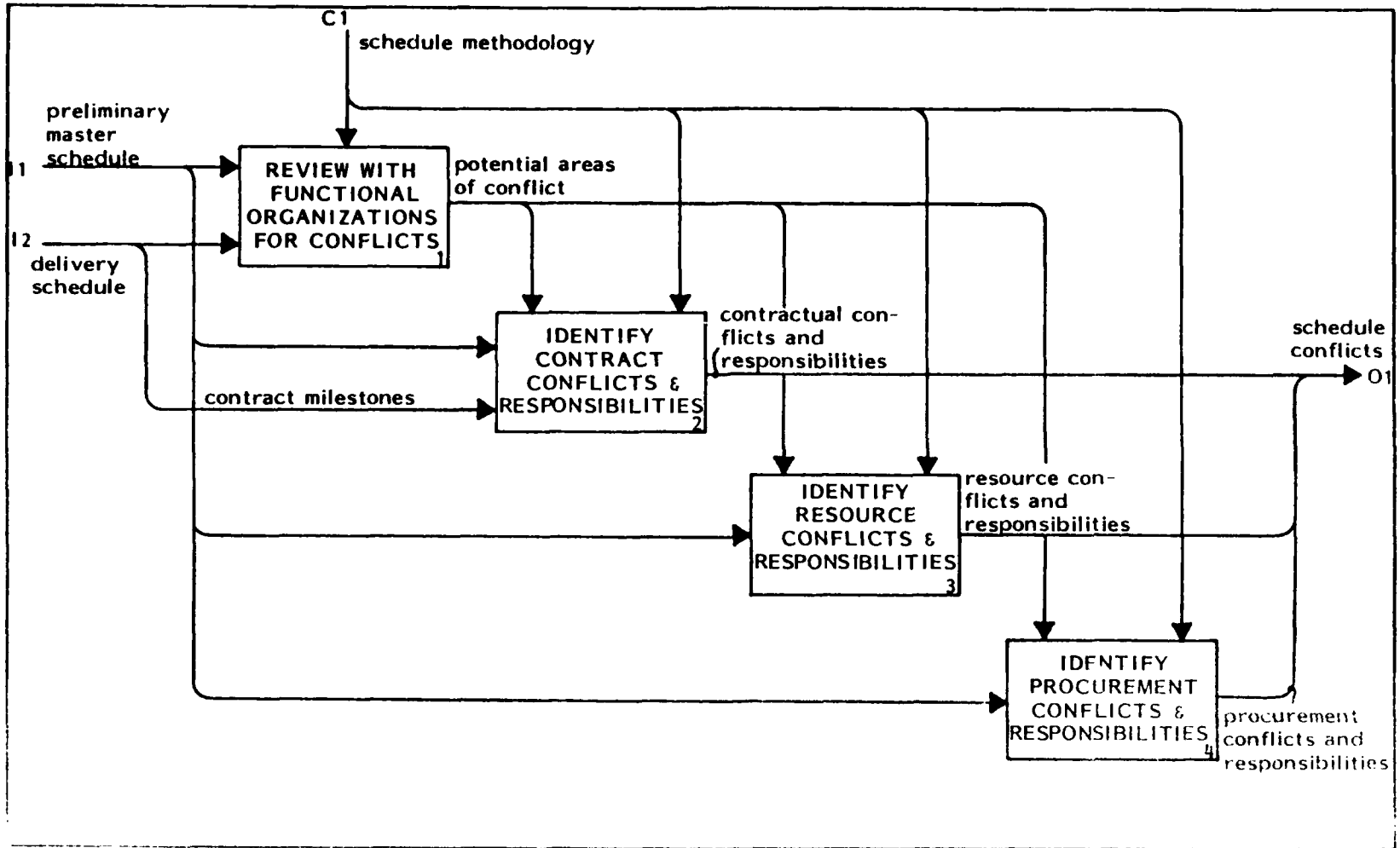

NODE	TITLE	NUMBER
MFG A213	IDENTIFY MASTER SCHEDULE CONFLICTS	

A214 Resolve Master Schedule Conflicts

The resolution of schedule conflicts requires a series of decisions to be made at various management levels within and across functional lines. These decisions may be based on one or more "Trade-off" factors, e.g., cost/schedule, cost/performance, schedule/performance. Included in the analysis of these conflicts may be a detailed risk analysis that provides management with objective data to base decisions on. There may be schedule conflicts that cannot be resolved at this phase of a program due to lack of sufficient data, absence of proper skills, or direction from the customer or management to defer these conflicts for resolution at a later date. The result of these compromise decisions is a completed master schedule that is ready for final approvals.

Glossary

Schedule Impact Analysis - Assessment of predicted risk factors based on cost/schedule performance trade-offs and analysis of possible penalties (i.e., loss of award fee, incentive affects, etc.).

PUBLICATION

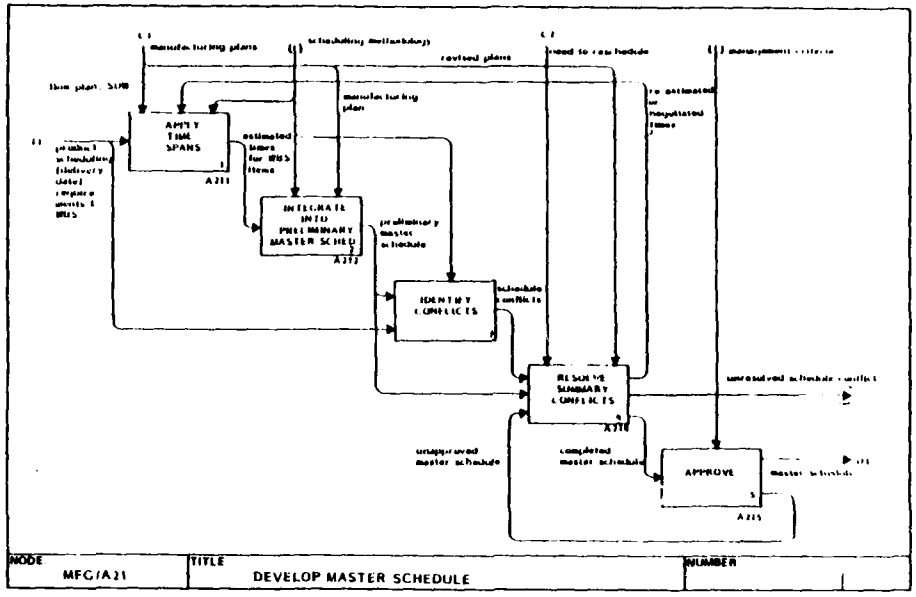

Contractual Conflicts & Responsibilities - Identified schedule discrepancies between preliminary master schedule and contractual requirement dates, and organization(s) responsible for resolution.

Resource Conflicts & Responsibilities - Identified discrepancies between tooling and planning start dates, lead times, and manufacturing need dates, and organization(s) responsible for resolution.

Procurement Conflicts & Responsibilities - Identified discrepancies between material procurement start dates, lead times and manufacturing need dates, and organization(s) responsible for resolution.

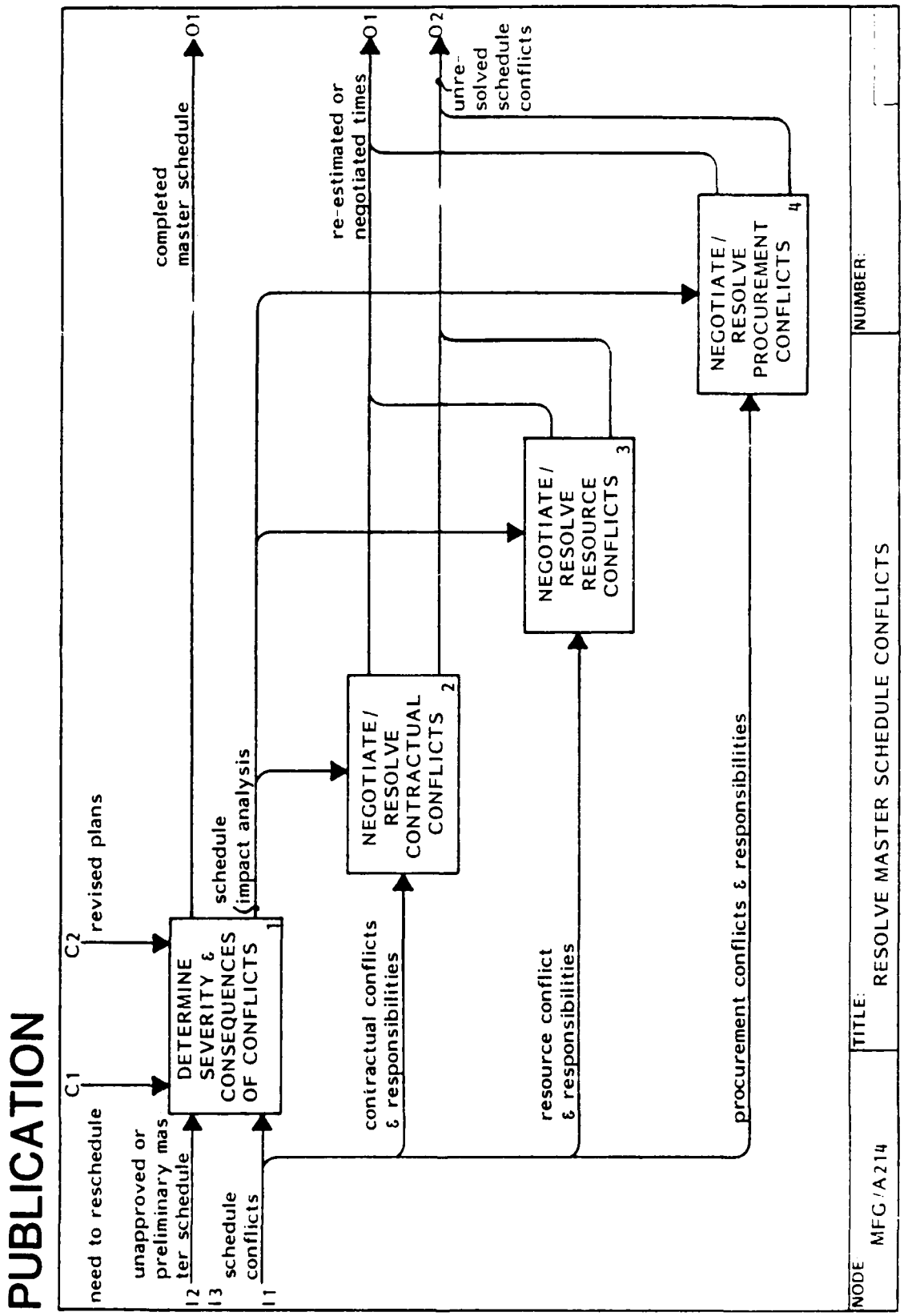
PUBLICATION
need to reschedule
C1
unapproved or preliminary mas ter schedule
I2
I3
schedule conflicts
I1
C2
revised plans
DETERMINE SEVERITY & CONSEQUENCES OF CONFLICTS
1
schedule (impact analysis
completed master schedule
O1
contractual conflicts & responsibilities
NEGOTIATE/ RESOLVE CONTRACTUAL CONFLICTS
2
re-estimated or negotiated times
O1
O2
unre- solved schedule conflicts
resource conflict & responsibilities
NEGOTIATE/ RESOLVE RESOURCE CONFLICTS
3
procurement conflicts & responsibilities
NEGOTIATE/ RESOLVE PROCUREMENT CONFLICTS
4
NUMBER:
TITLE:
RESOLVE MASTER SCHEDULE CONFLICTS
NODE
MFG/A214

A215 Approve Master Schedule

The approval cycle for the master schedule follows established division/company procedures. As shown in Boxes 1 through 3, the schedule is reviewed for functional, program, and overall business considerations. The review(s) will vary in the level of managment involved based on the dollar value of the contract, technical complexity, estimated risk, customer involved, and division(s) participating. When the appropriate management approvals are obtained, the master schedule is issued.

Glossary

Functional Management Approval - Signature approval by the manufacturing and supporting functional organization heads or their designated representative(s).

Program Management Approvals - Signature approval by the program manager or delegate(s).

Executive Management Approval - Signature approval by the appropriate executive officer or delegate.

PUBLICATION

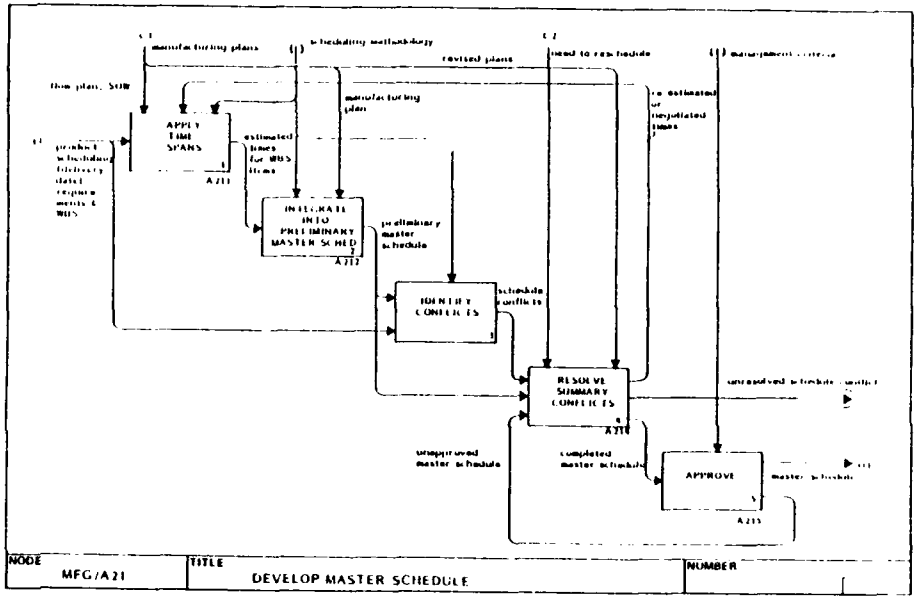

PUBLICATION

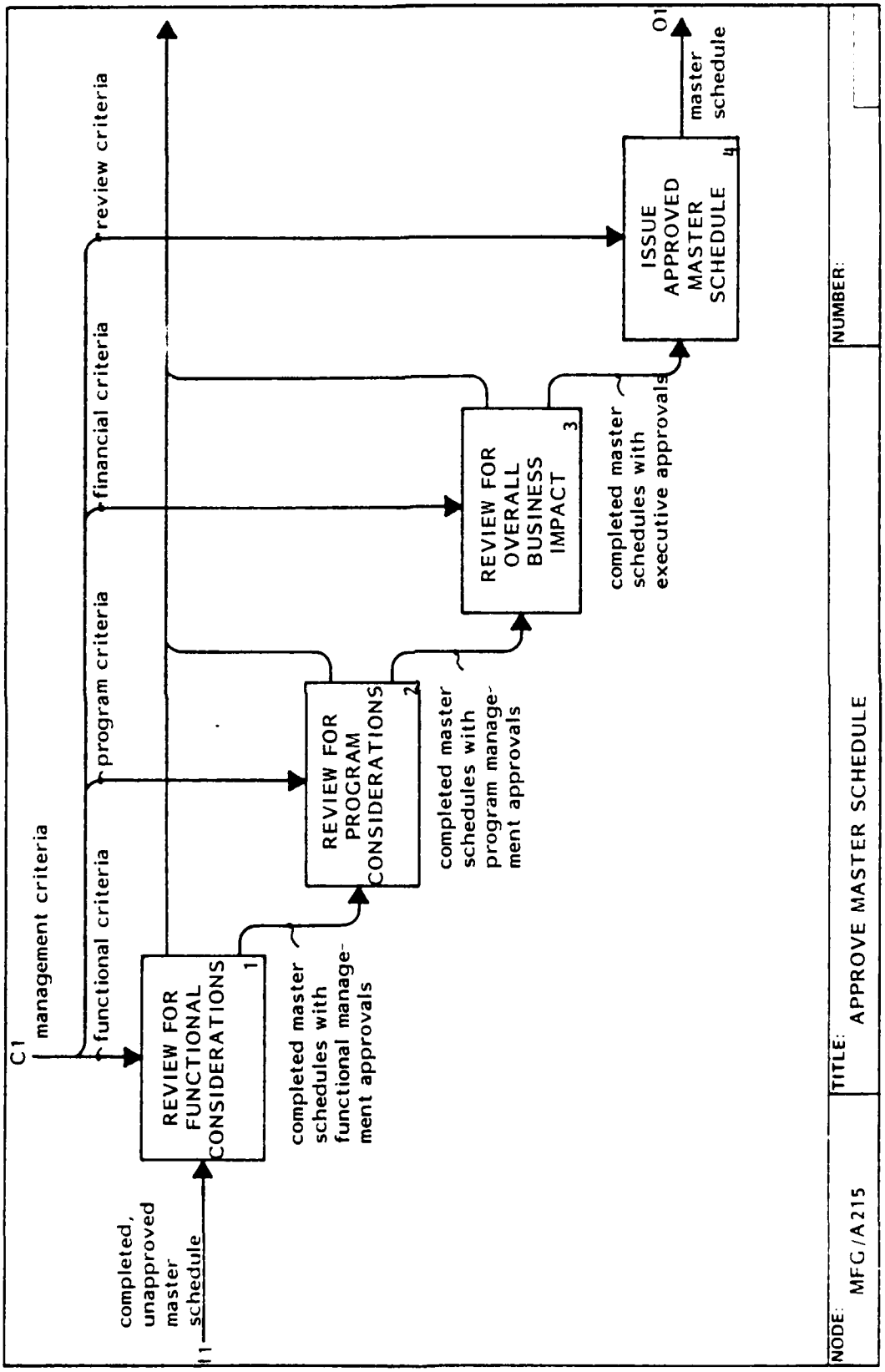

A22 Develop Coordinating Schedules

The engineering bill of materials and the manufacturing indentured parts list are converted, in Box 1, to the set-backs and times used in the preparation of both the prototype schedule and the production schedule. These set-backs and flow times, together with the appropriate parts of the manufacturing plan, transform the master schedule into coordinating schedules for the prototype, production, and production support activities.

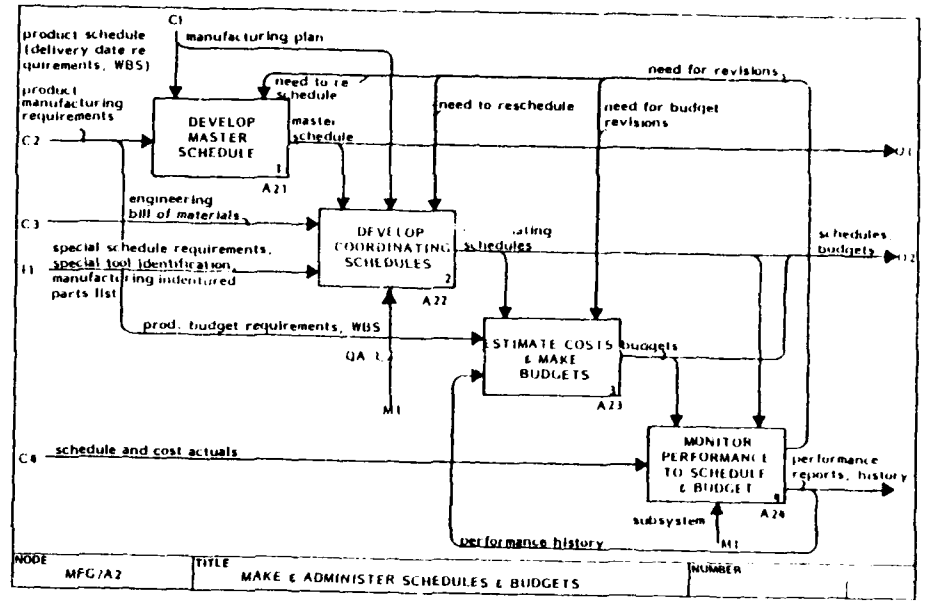

Glossary

Set-backs - "Item and Indenture" assignment for each item showing its relation to an "end item". It identifies for any item the major item into which it goes and the indenture level at which it is needed.

Flow Plan, SOW - Expected elapsed times for fabrication, assembly, movement, etc. for each item or group of items. (e.g., 20 days for fabrication of all indenture 3 details of some assembly).

First Article Schedule - Includes timing of all events to allow first instance product to be produced. Includes Engingeering Release Schedule, Planning Completion Schedule, Facility and Equipment Schedule, Tooling Schedule as well as first item production and testing schedules. It must also cover initial materials ordering and startup manpower staffing and training.

Production Schedule - Includes Master Position (Acceleration) Curves for major assembly and installation, (start and completion dates for each major item) plus subassembly and detail fabrication schedules (start and completion dates by indenture group). The start date is when all materials, sub-items

PUBLICATION

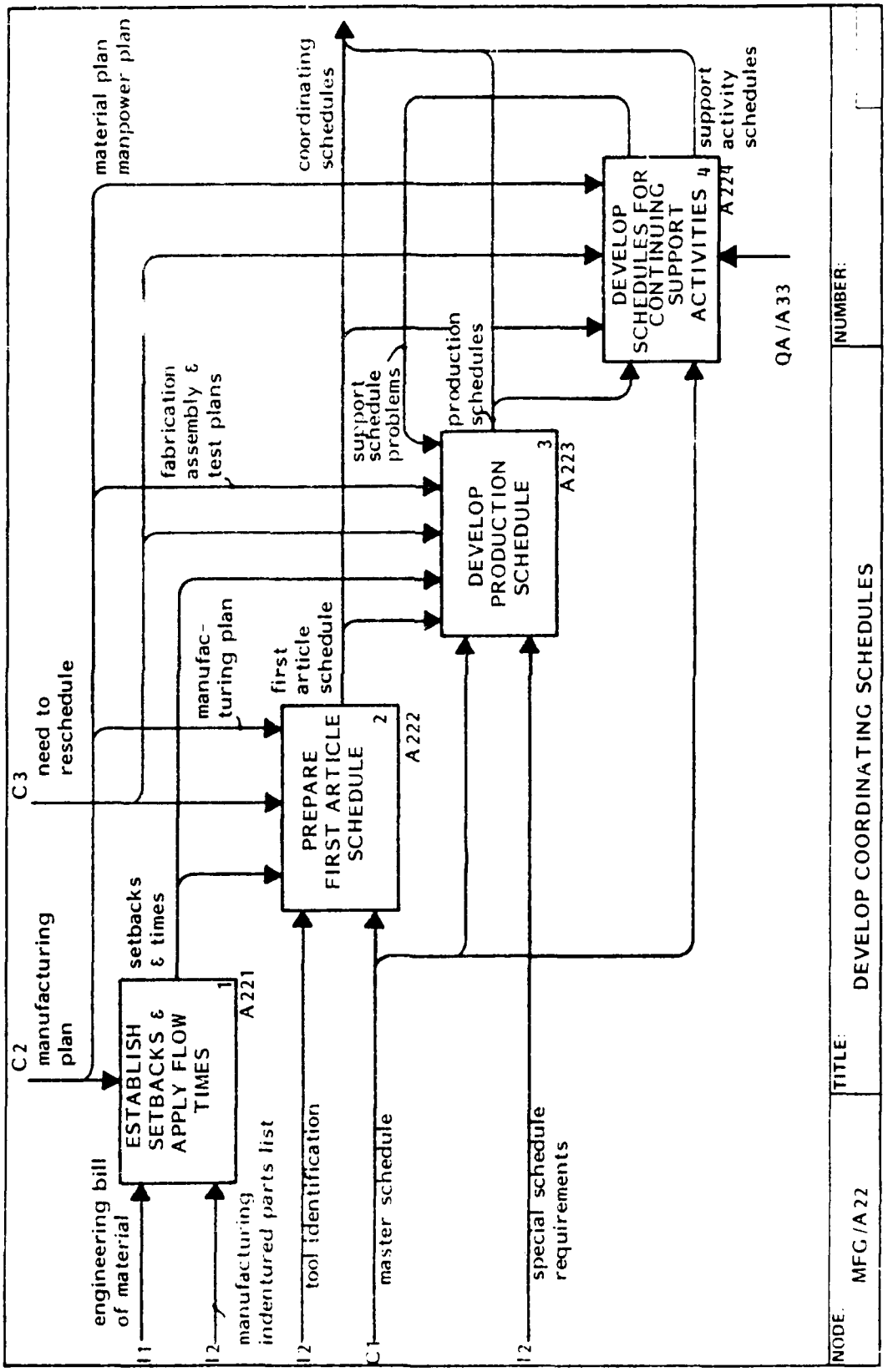

A22 Glossary (con't)

and tools must be available. The completion date is when the item must be available to go into the next assembly. The time between these dates is "scheduled" by production control (A61).

Support Activity Schedule - Includes those ongoing support activities for continuing production -- material schedules and manpower schedules.

A221 Establish Setbacks & Apply Flow Times

The detailed data contained in the manufacturing Indentured Parts List (IPL) is compared to the more general information in the manufacturing plan/flow plan to determine if consistencies are present. This data is utilized in Box 1 to refine the item and station logic flows as well as in Box 2 to develop the setback relationship of the individual items. When the setback logic is firmly established, time spans are assigned to the items based on the criteria defined in CV/A211 (apply time spans). The final step (Box 4) is to resolve the differences that are made apparent in Boxes 1, 2 or 3. This may require "adjustments" as depicted and can influence the final set-back times that are created.

Glossary

Item Flow Times - Estimated elapsed time from start of work to completion of each part identified in the station plan.

Setback Schedule - Item flow times applied to setback relationships.

PUBLICATION

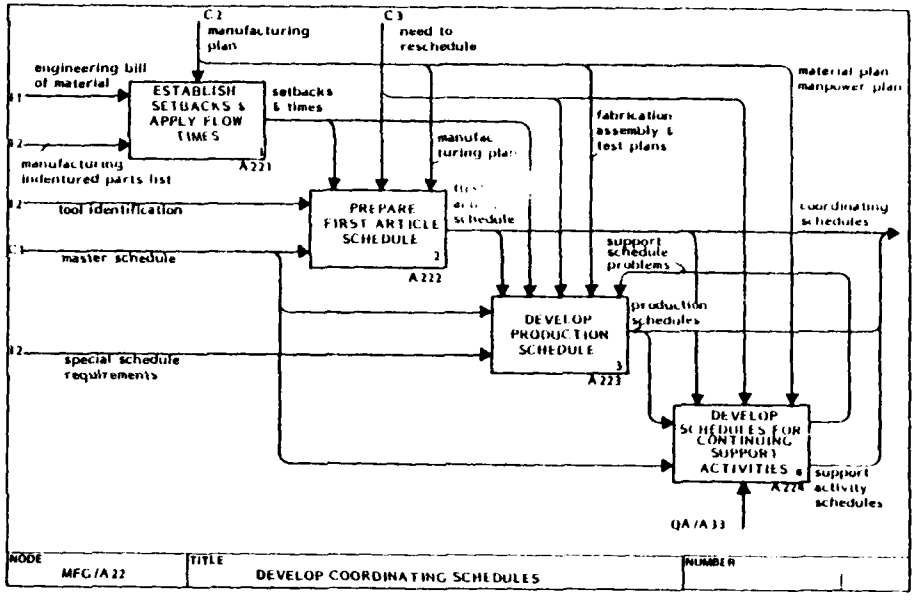

Time Span Adjustments - Required changes in time spans or indentures resulting from reconciliation of differences between Manufacturing IPL and Engineering BOM.

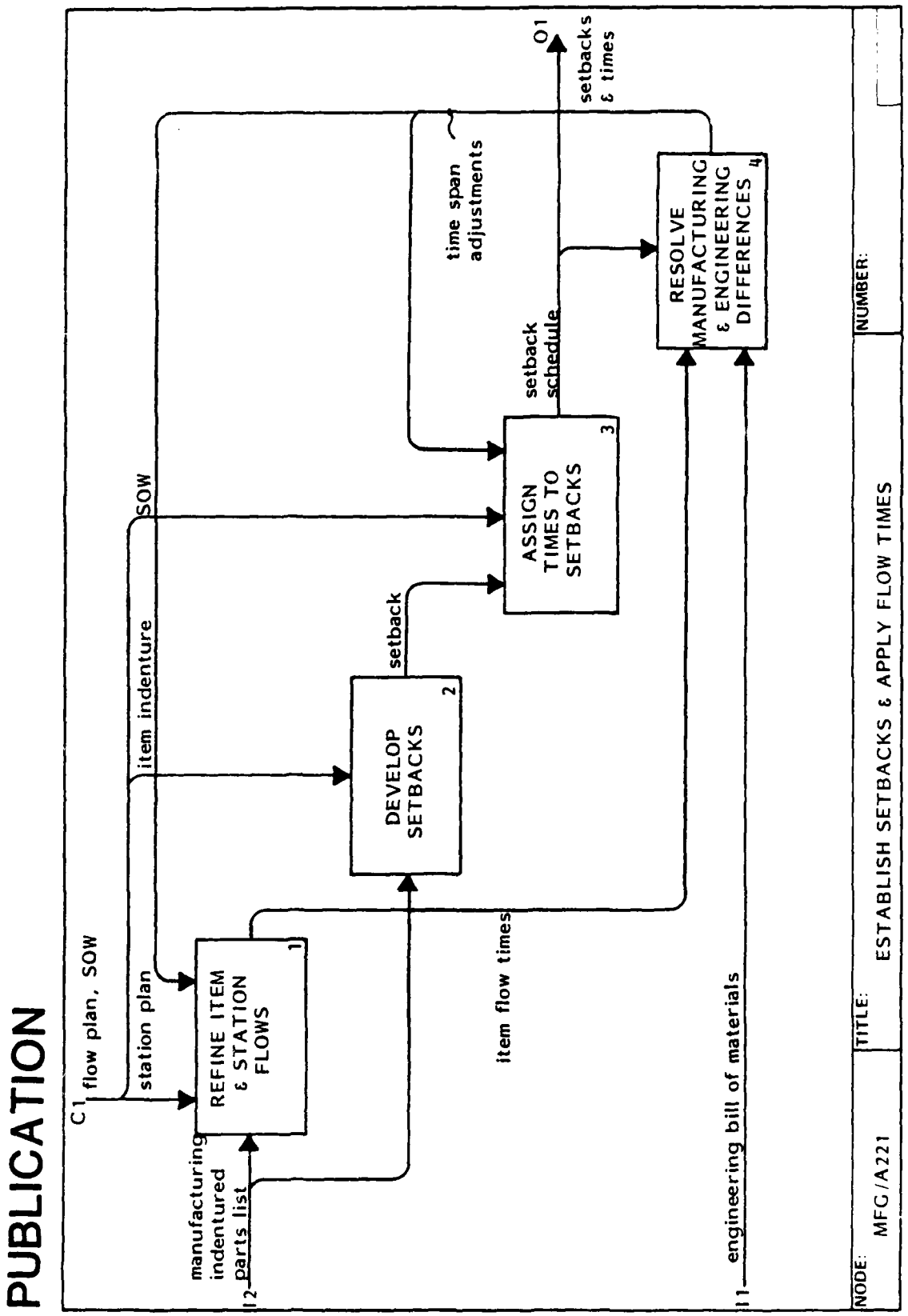
PUBLICATION
C1 flow plan, SOW
station plan
SOW
item indenture
manufacturing indentured parts list
I2
REFINE ITEM & STATION FLOWS
1
DEVELOP SETBACKS
2
setback
item flow times
ASSIGN TIMES TO SETBACKS
3
setback schedule
time span adjustments
O1
setbacks & times
RESOLVE MANUFACTURING & ENGINEERING DIFFERENCES
4
I1
engineering bill of materials
NODE:
MFG/A221
TITLE:
ESTABLISH SETBACKS & APPLY FLOW TIMES
NUMBER:

PUBLICATION

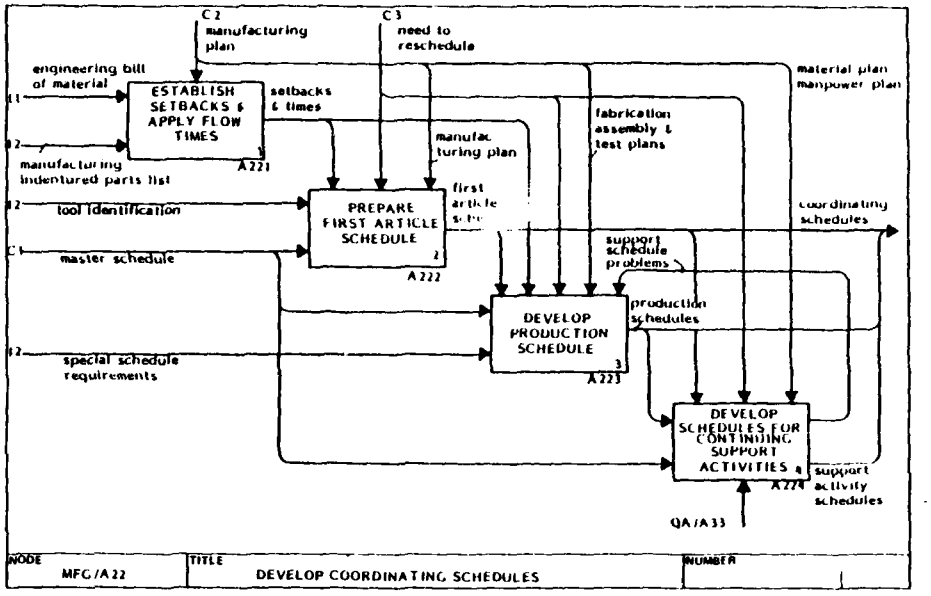

A222 Prepare First Article Schedule

The initial steps in preparing the first article schedule (Boxes 1 & 2) consist of determining the detail schedule dates for manufacturing planning and all the resources required to support the manufacturing effort. These dates are established based upon the manufacturing plan, item and station flow times, and the constraints imposed by the master schedule. The "ideal" manufacturing requirements developed are then compared with the engineering milestone schedules in Box 3. Since there usually will be some differences between engineering planned dates and manufacturing need dates, a series of compromise decisions will take place. The result of these compromises will be a set of "negotiated" engineering release dates. The negotiated release dates plus the schedule dates developed in Boxes 1 and 2 are integrated into a first article schedule. A final check is made to assure compliance with the commitments of the master schedule (Box 4) prior to management approval and issuance of the first article schedule.

Glossary

Planning Release Dates - Need dates for planning release required to support start of manufacturing.

Tools, Facility, Equipment & Test Dates - Required availability dates to support manufacturing start-up and supporting quality and acceptance test requirements for first article.

Drawing Release Schedule - Tabulation of planned engineering drawing release and intermediate dates.

Negotiated Engineering Release Dates - Revised scheduled drawing release dates required to support start of manufacturing.

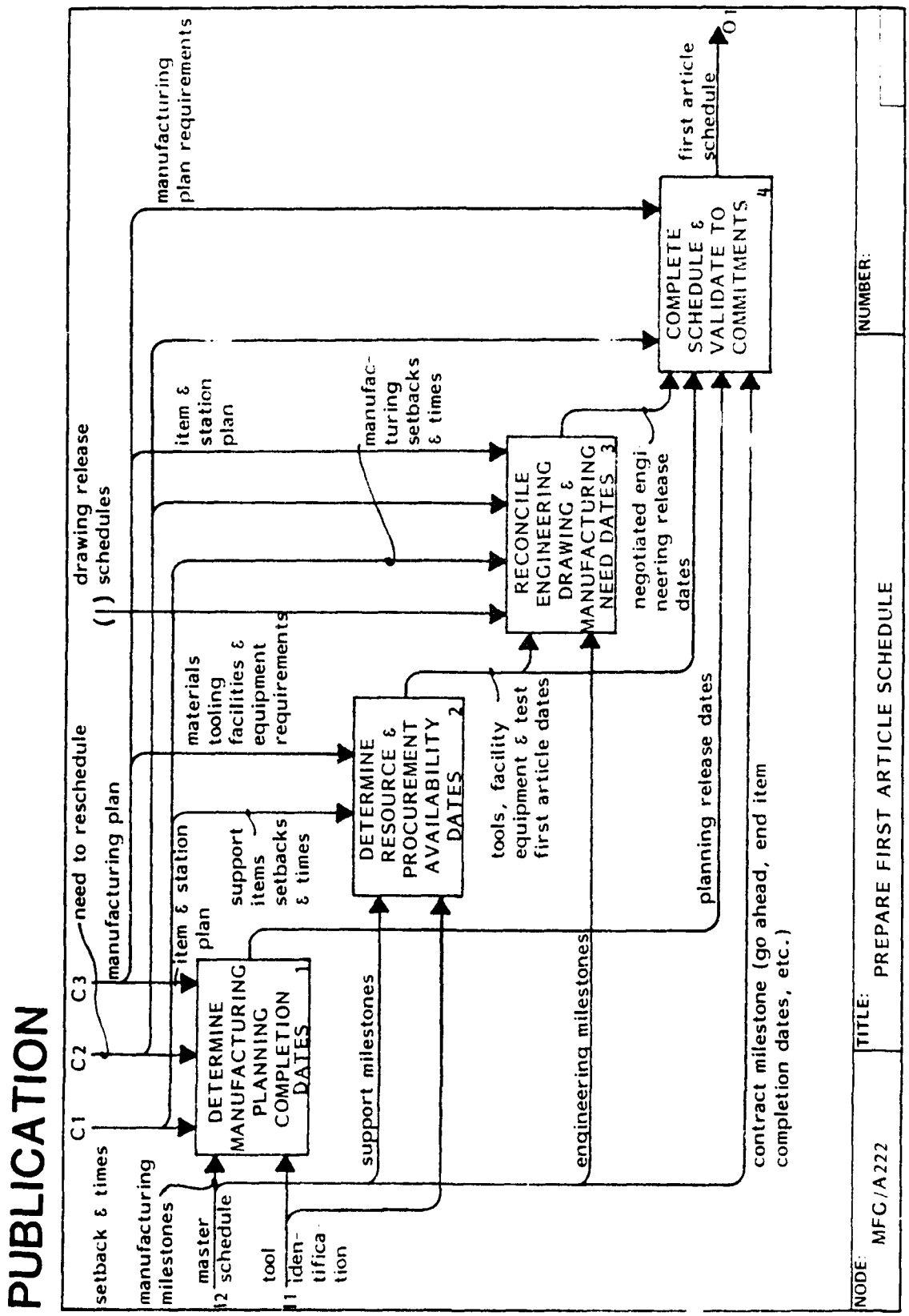
PUBLICATION
C1
C2
C3
setback & times
need to reschedule
manufacturing milestones
manufacturing plan
master schedule
item & station plan
tool identification
DETERMINE MANUFACTURING PLANNING COMPLETION DATES 1
support items setbacks & times
materials tooling facilities & equipment requirements
support milestones
DETERMINE RESOURCE & PROCUREMENT AVAILABILITY DATES 2
drawing release (|) schedules
item & station plan
manufacturing setbacks & times
tools, facility equipment & test first article dates
RECONCILE ENGINEERING DRAWING & MANUFACTURING NEED DATES 3
engineering milestones
negotiated engineering release dates
planning release dates
manufacturing plan requirements
contract milestone (go ahead, end item completion dates, etc.)
COMPLETE SCHEDULE & VALIDATE TO COMMITMENTS 4
first article schedule
O1
NODE: MFC/A222
TITLE: PREPARE FIRST ARTICLE SCHEDULE
NUMBER:

A223 Develop Production Schedule

The key element required to produce all production schedules is the acceleration curve (Box 1). The curve is constructed from the scheduled delivery dates contained in the master schedule, or product schedule, and the major activity spans in the first article schedule spans are gradually reduced as the rate increases until maximum rate and flow reduction are achieved. These major spans as derived from the first article schedule and plotted against the build-up rate provide the overall spans in which the functions (e.g., purchasing, fabrication, assembly, test) must operate throughout the production phase. These spans are further broken down in Box 2 to the level required to control the individual start/completion points in the factory. The acceleration curve also provides the data necessary to estimate work in process requirements throughout the program which is utilized as the basis for determining the resource requirements (Box 3). The lot sizes (Box 4) are generally determined from the acceleration curve at the program level in terms of fiscal year buy quantities of completed end items.

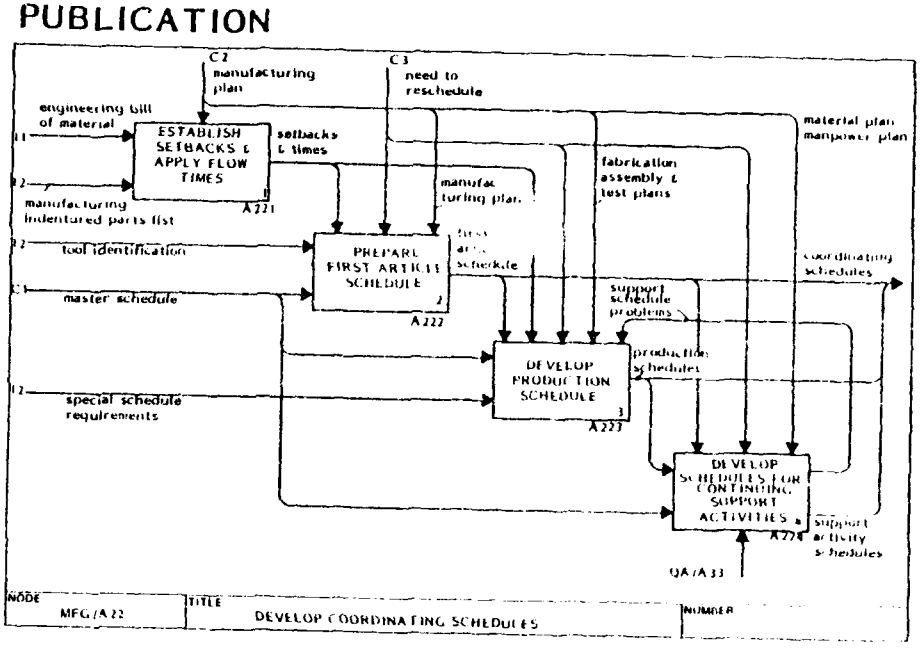

These fiscal lot sizes are then further divided into manufacturing lot sizes based on company policies. These lots may vary from one piece per manufacturing lot (complex, expensive parts) to a manufacturing lot equal to the fiscal year buy size (inexpensive, easy to produce parts). Boxes 1 through 4 are then compared to contractual requirements (Box 5) prior to approval and issuance.

Glossary

Build-Up Rates - Most economical or efficient production delivery curve that will support customer delivery requirements.

Next Assembly Date - Date the item is required

FTR110100U
September 1983

PUBLICATION

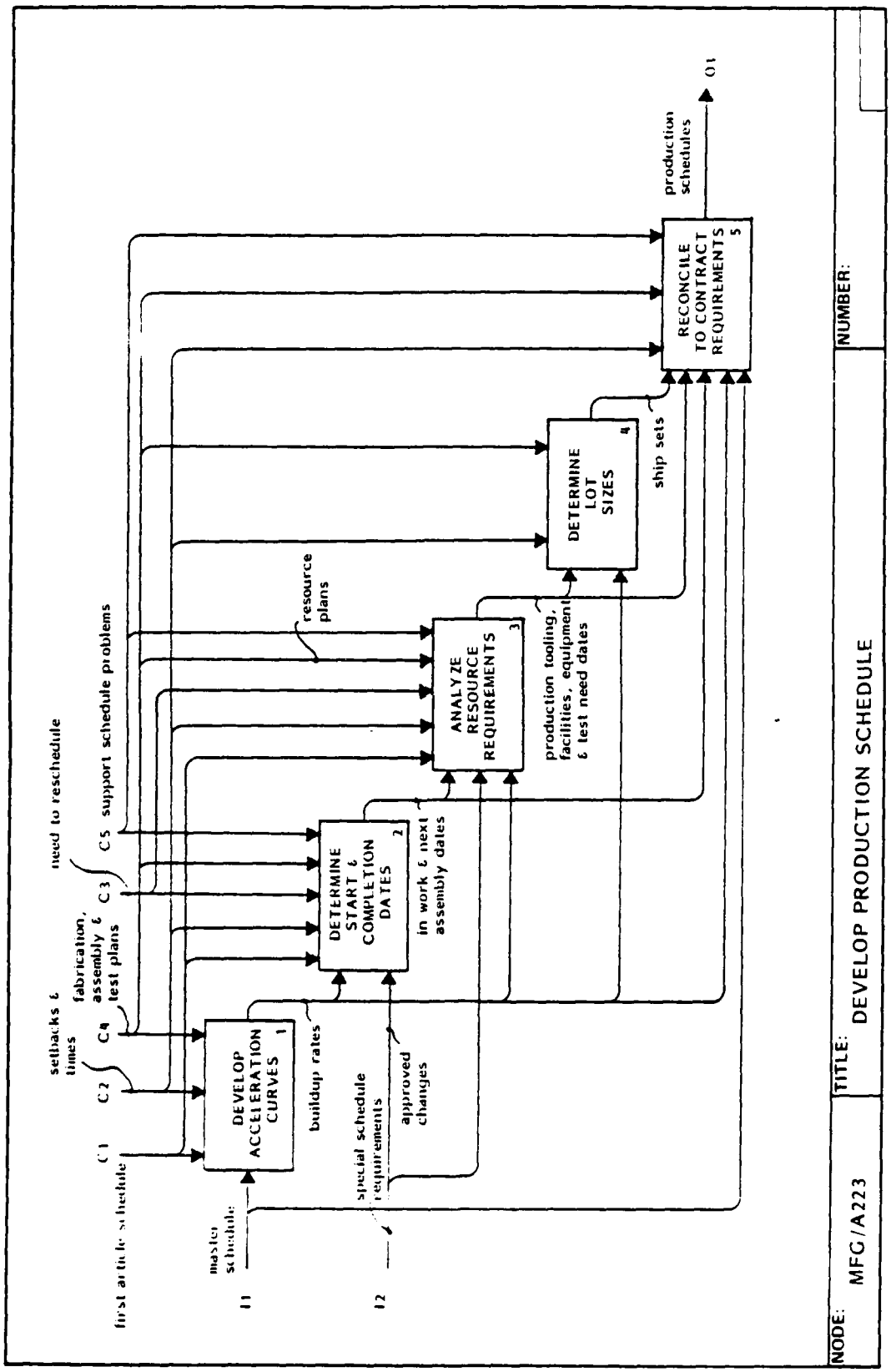

A223 Glossary (con't)

to support making the next assembly.

In-Work-Date - Required start date based on item flow time and required next assembly date.

Production Tooling, Facilities Equipment & Test Need Dates - Required availability dates to support production.

Ship Sets - End item quantities broken down into manageable and economic lots.

A224 Develop Schedules for Continuing Support Activities

The production schedules provide the detail and visibility necessary to develop material inventory and department level manpower plans. The material requirements from the material plan can be time-phased to the production schedule with allowances for mortality, based on company policies and the product being produced. The detail manloads are derived from the overall financial planning data as it relates to the production schedules. Material and manloading problems may become apparent when the production schedules become available. The visibility provided by these schedules will allow adjustments to be made early in the program before problems can affect production.

Glossary

Manpower Loads - Time-phased personnel requirements, including multiple shift applications.

Long Lead Schedule - Basic material schedules required immediately following program go-ahead to permit ordering of time-critical material.

Material Operating Schedule - Detail material schedules to support ongoing production requirements.

Material Conflicts - Problems of under support or over support in terms of optimum procurement. May require production schedule adjustments.

Workload Conflicts - Personnel staffing and loading problems. May require production schedule adjustments and/or application of overtime or special shifts.

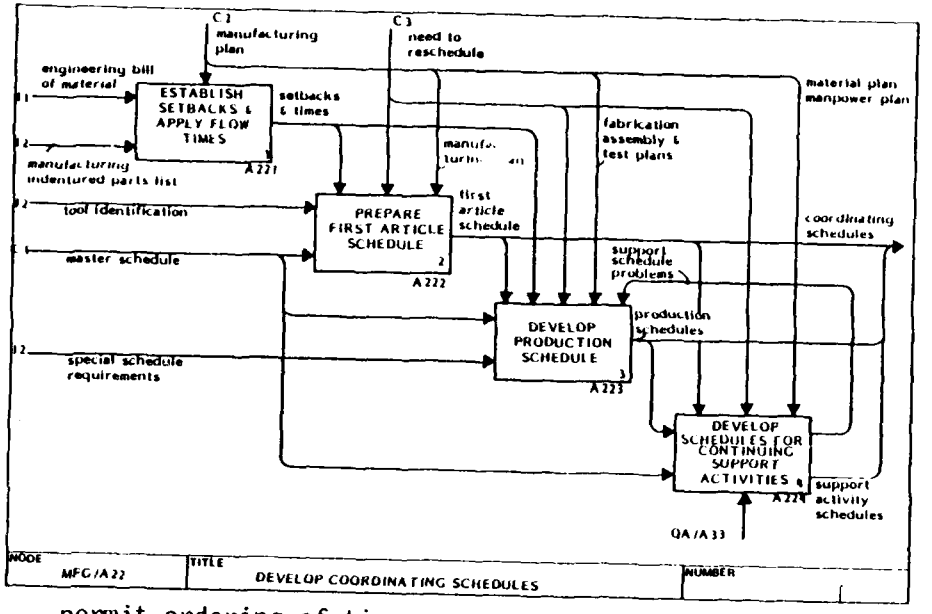

PUBLICATION

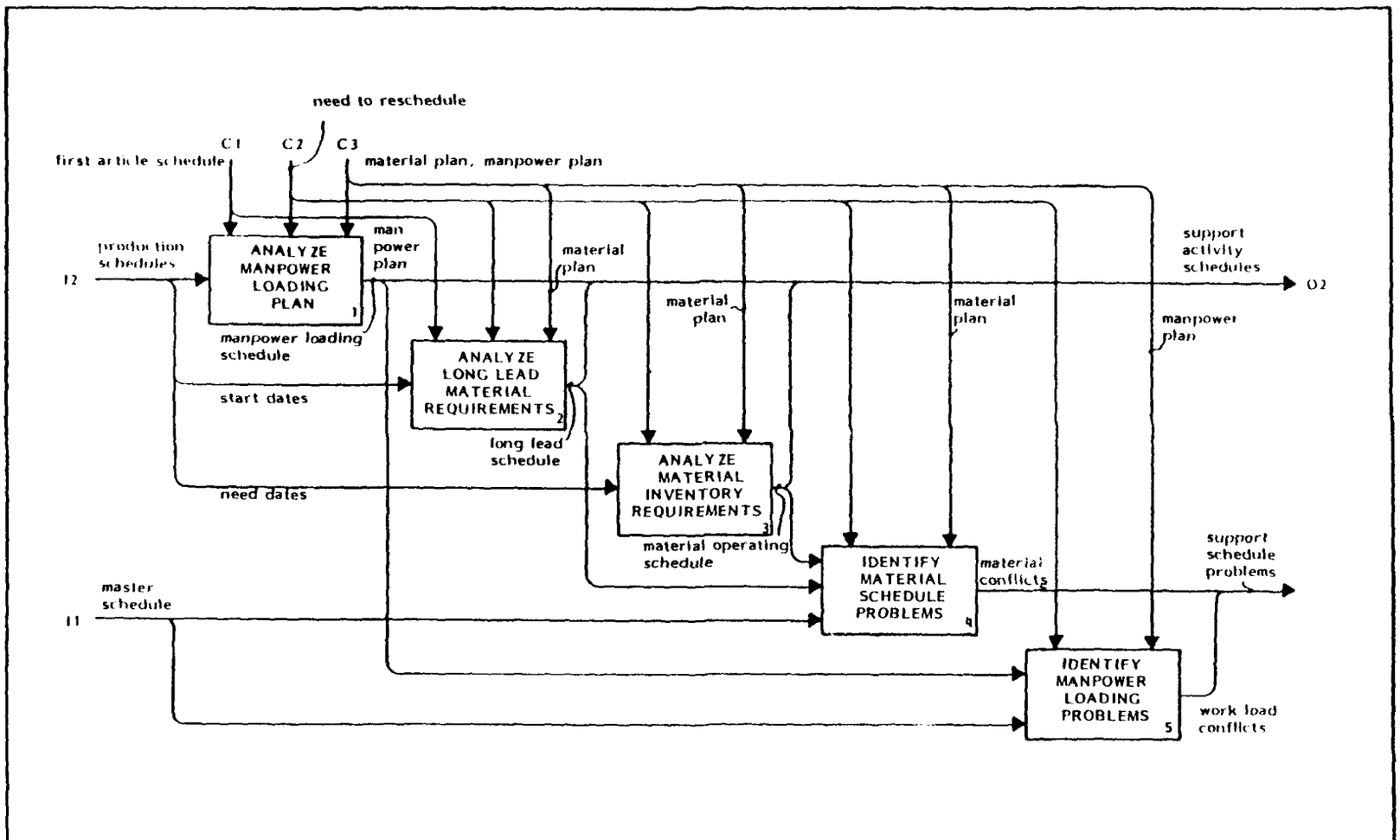

NODE:	TITLE:	NUMBER:
MFG/A224	DEVELOP SCHEDULES FOR CONTINUING SUPPORT ACTIVITIES	

A23 Estimate Costs & Make Budgets

For planning purposes, the product budget for the manufacturing activity is subdivided into planning packages based on the Work Breakdown Structure (Box 1). Simultaneously, accounts are assigned identifying contract lot releases (Box 2). Working budgets are then developed as Cost Account Packages, which are assigned structured sub-accounts and released (Box 3 and 4). Finally, functional (departmental) budgets are issued, permitting work to commence.

PUBLICATION

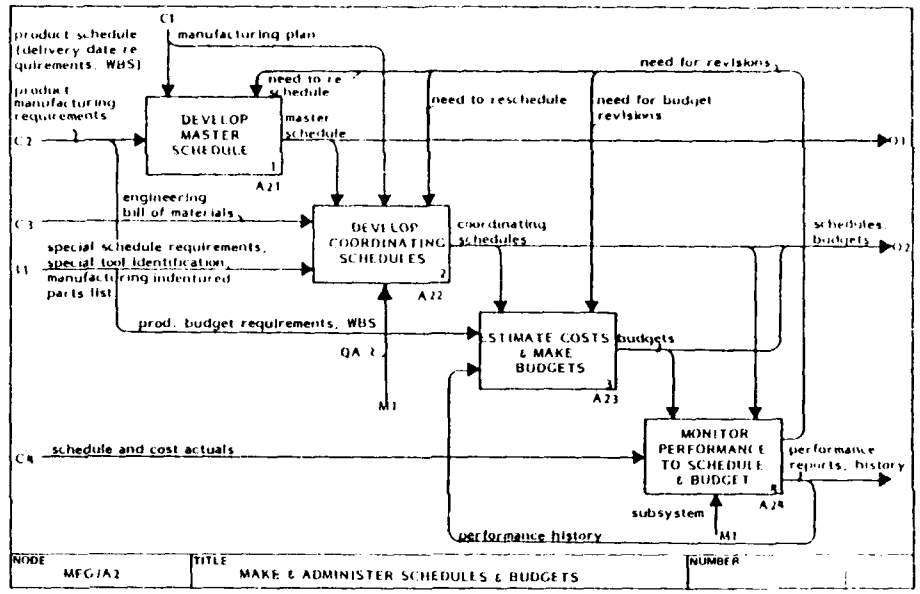

Glossary

Contract Lot Releases - Deliverable blocks of items determined by contractual agreement.

Planning Packages - Segments of the product budget identified to specific WBS elements.

Contract Accounting - Order number or contract level accounting, normally denoting program lot buys.

Cost Account Packages (CAPS) - Measurable elements of work, budgeted at the lowest level of the WBS at which cost performance is measured.

Program Budget Authorizations - Documents bearing the CAP identity accounting and program control release approvals.

Functional Budgets - CAP budgets approved and issued at the functional level (i.e., Engineering, Manufacturing, Material, Quality Assurance, etc.).

PUBLICATION

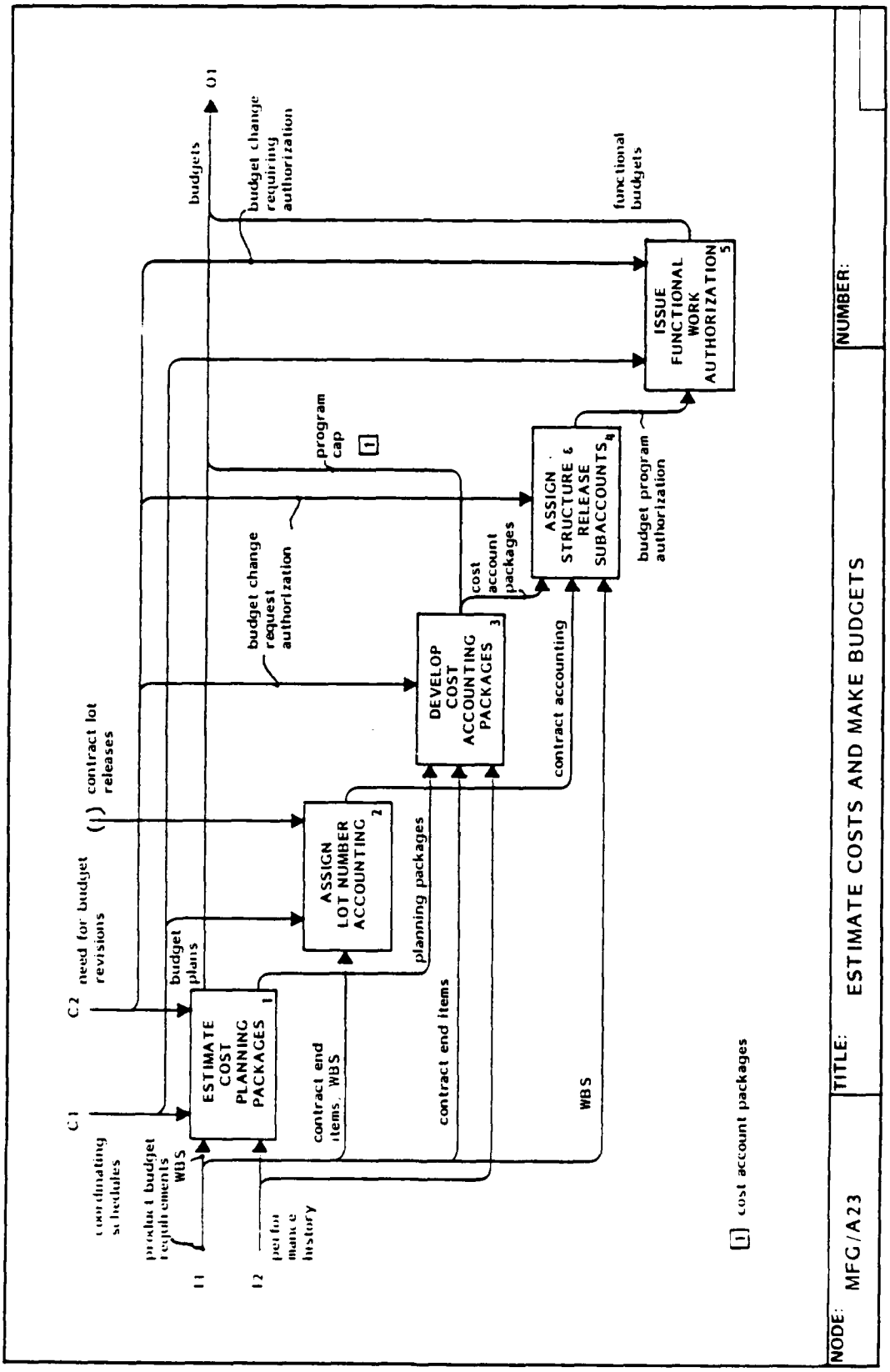

A24 Monitor Performance to Schedule and Budget

This activity involves the development and monitoring of display methods (Box 1) for the various production schedules and budgets. Box 2 records the actual schedule and cost data which then is evaluated in Box 3. This evaluation may result in requests for changes in the schedule and budget.

Glossary

Monitoring Methods - Techniques used to track and record schedules and cost progress in order to identify and evaluate variance. Format and reporting intervals vary with importance of tasks being tr cked.

Available Me :ods - Available techniques used such as GANTT charts, crew load charts, drawing release curves, etc., to identify and evaluate cost and schedule variances.

Schedule and Budget Actuals - A record of actual cost and schedule progress, and the collection of the total expended effort for a specific task reported for a particular period.

PUBLICATION

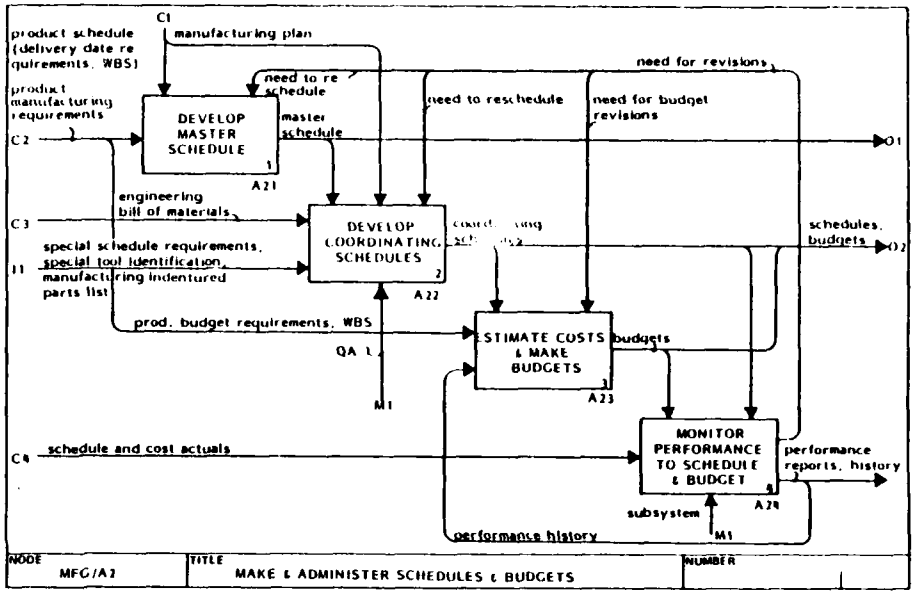

Evaluations - Estimated or calculated measurement of progress against schedule and budget requirements.

Performance and Status Reports, History - Evaluation of cost and schedule progress. For purposes of management appraisal of tasks or for archival purposes.

Request for Schedule or Budget Change - As a result of evaluations, requests to correct delinquent conditions are made.

Status Reports - Current and expected availability of needed items.

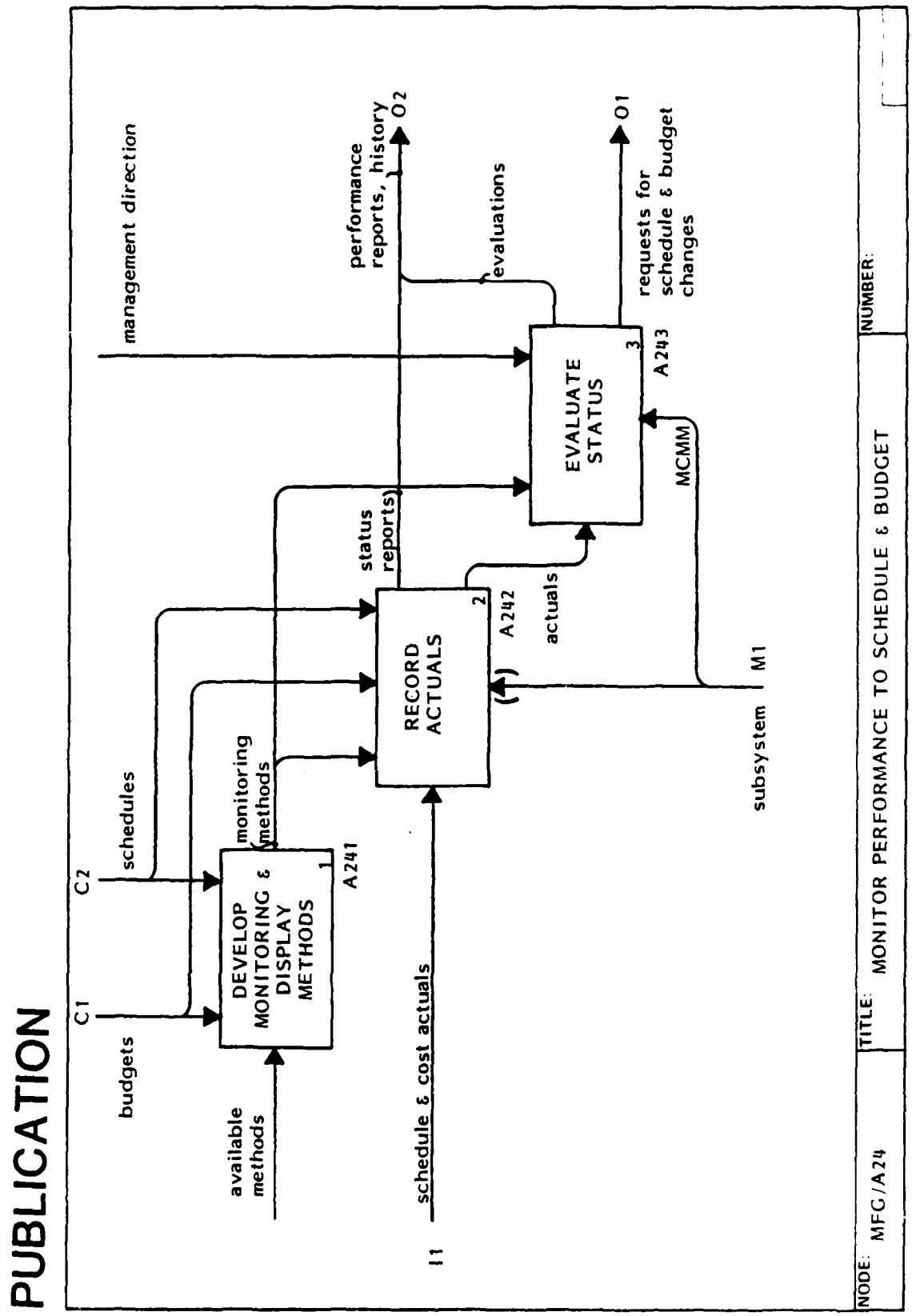
PUBLICATION
C1
budgets
C2
schedules
available methods
monitoring methods
DEVELOP MONITORING & DISPLAY METHODS
1
A241
I1
schedule & cost actuals
RECORD ACTUALS
2
A242
status reports
actuals
management direction
EVALUATE STATUS
3
A243
performance reports, history
O2
evaluations
O1
requests for schedule & budget changes
MCMM
M1
subsystem
NODE:
MFG/A24
TITLE:
MONITOR PERFORMANCE TO SCHEDULE & BUDGET
NUMBER:

PUBLICATION

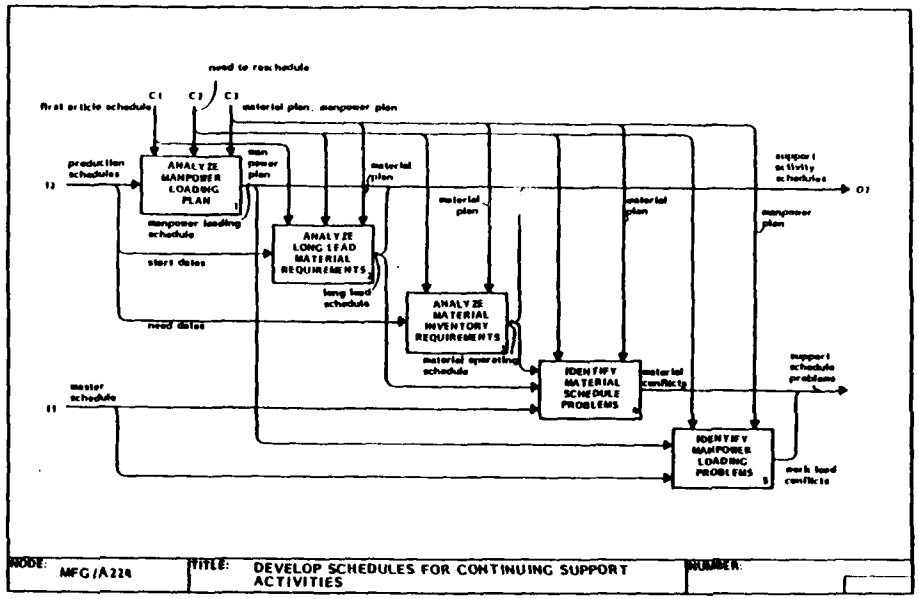

A241 Develop Monitoring and Display Methods

These activities (Boxes 1 & 2) involve the analysis of the budgets and schedules to be developed for the type and size of the program involved. Further analysis is required to review customer contractual reporting requirements and timing, i.e., earned value techniques, line-of-balance, Program Evaluation Reporting Techniques (PERT) etc., and the frequency of reporting status, daily, weekly, monthly. Cost trade off analysis of computer produced versus graphic art displays are compared to provide the most cost-effective method with the least amount of maintenance and rapid update features. Depending upon the size and scope of each program and considerations for customer/management reporting requirements, final status formats and quantities of status displays are developed. This activity (Box 3) is a direct derivative from Box 1. Based upon the final status format, quantity of status charts, (i.e., earned value, line-of-balance, PERT GANIT, etc.) and management/customer reporting frequency are evaluated to establish and develop the method of display. Where high volume is required, this may necessitate a status control room area capable of providing for large attendance, with provisions for camera projection, screens, viewgraph projections, microphones, phones, etc. Where low volume is required, this may dictate a conference room for stand-up briefings and hand-out status reports.

Glossary

C/SCS Requirements - Cost/Schedule Control System performance measurement and reporting requirements contractually imposed upon major government procurement programs.

BCWS - (Budgeted cost of work scheduled) - Established budget values for work

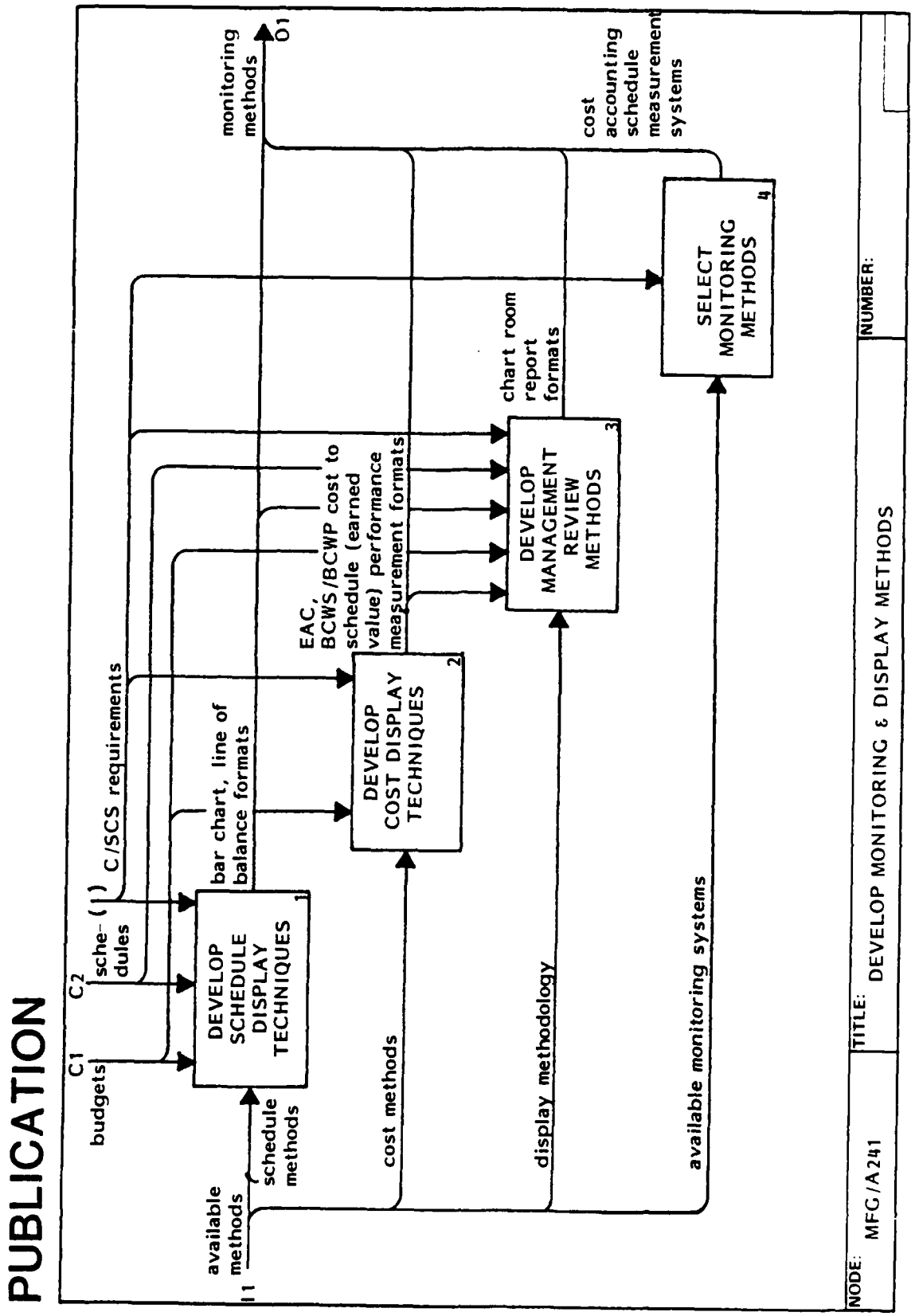
PUBLICATION
C1
budgets
C2
sche-
dules
C/SCS requirements
I1
available
methods
DEVELOP
SCHEDULE
DISPLAY
TECHNIQUES
1
bar chart, line of
balance formats
schedule
methods
monitoring
methods
O1
DEVELOP
COST DISPLAY
TECHNIQUES
2
EAC,
BCWS/BCWP cost to
schedule (earned
value) performance
measurement formats
cost methods
DEVELOP
MANAGEMENT
REVIEW
METHODS
3
chart room
report
formats
display methodology
SELECT
MONITORING
METHODS
4
cost
accounting
schedule
measurement
systems
available monitoring systems
NODE:
MFG/A241
TITLE:
DEVELOP MONITORING & DISPLAY METHODS
NUMBER:

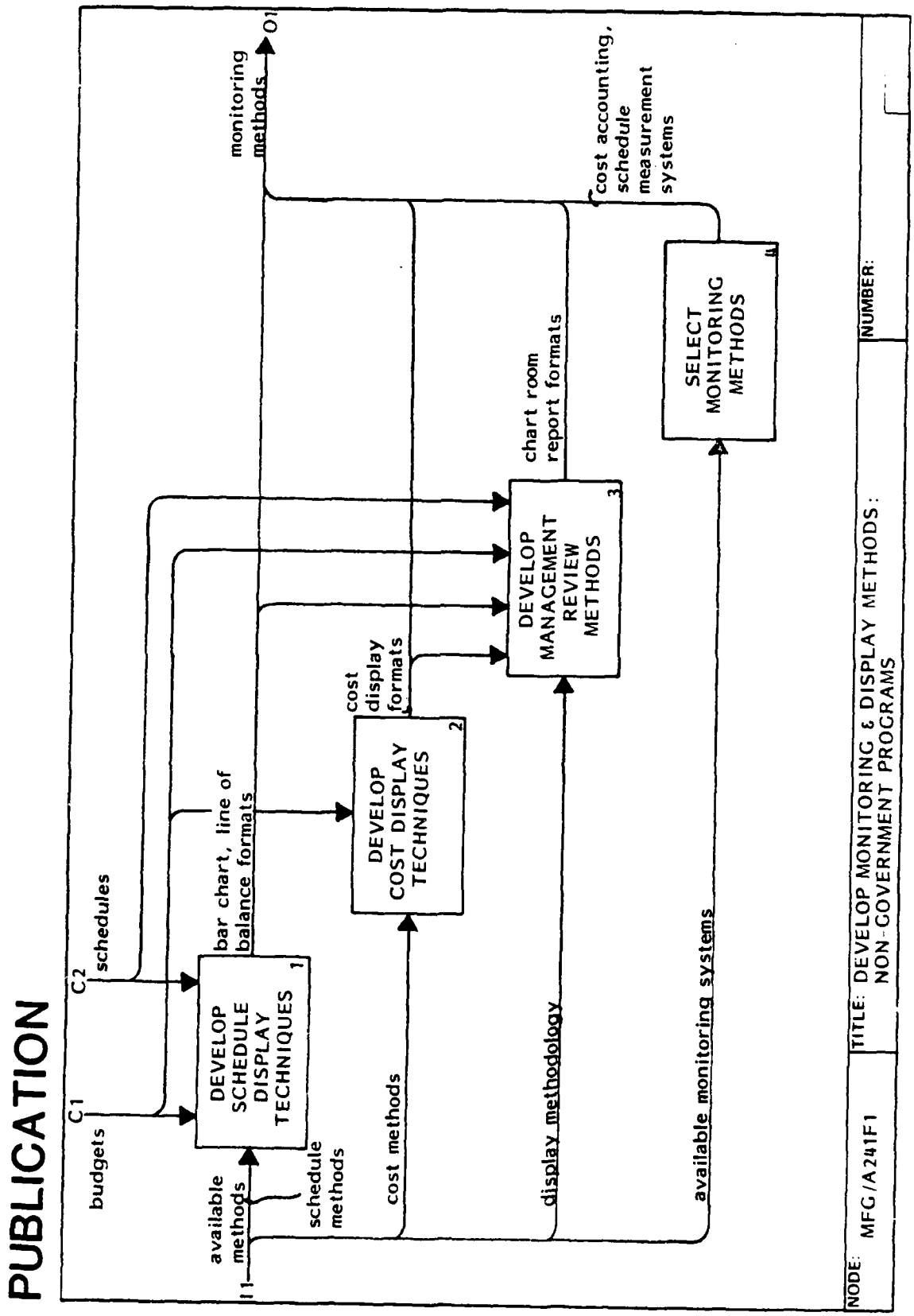
PUBLICATION
budgets
C1
schedules
C2
I1
available methods
DEVELOP SCHEDULE DISPLAY TECHNIQUES
1
schedule methods
bar chart, line of balance formats
monitoring methods
O1
cost methods
DEVELOP COST DISPLAY TECHNIQUES
2
cost display formats
chart room report formats
DEVELOP MANAGEMENT REVIEW METHODS
3
display methodology
cost accounting, schedule measurement systems
SELECT MONITORING METHODS
4
available monitoring systems
NODE: MFG/A241F1
TITLE: DEVELOP MONITORING & DISPLAY METHODS: NON-GOVERNMENT PROGRAMS
NUMBER:

A241 Glossary (con't)

scheduled to be performed (the numeric value of work scheduled).

BCWP - (Budgeted cost of work performed) - The budgeted value of work completed at a given point in time and indictive of that portion of the BCWS which has been accomplished (the numeric value of work performed).

ACWP - Actual cost of work performed.

EAC - (Estimate at completion) - A formal estimate of final costs.

Schedule Measurement Systems - Schedule tracking systems for basic work ordering documents (i.e. engineering, purchase and manufacturing orders).

A242 Record Actuals

The recording of actuals for drawing releases, purchase orders, work-in-process, and cost expenditures is accomplished via existing systems. Data so obtained is posted for schedule visibility in compliance with CV/A241, Develop Monitoring and Display Methods.

Glossary

Release Status - A tabulation of known engineering drawings and related documents, showing scheduled and actual in-work and release dates (and intermediate dates, when appropriate).

Purchase Order Status - Reports showing purchase order activity, including part number I.D., quantities, release dates and delivery due dates.

Work In Process Status - Reports showing the current location and schedule position of work orders released to the shop.

Cost Status Report - Recorded costs by Cost Account Package, by function, and summary.

PUBLICATION

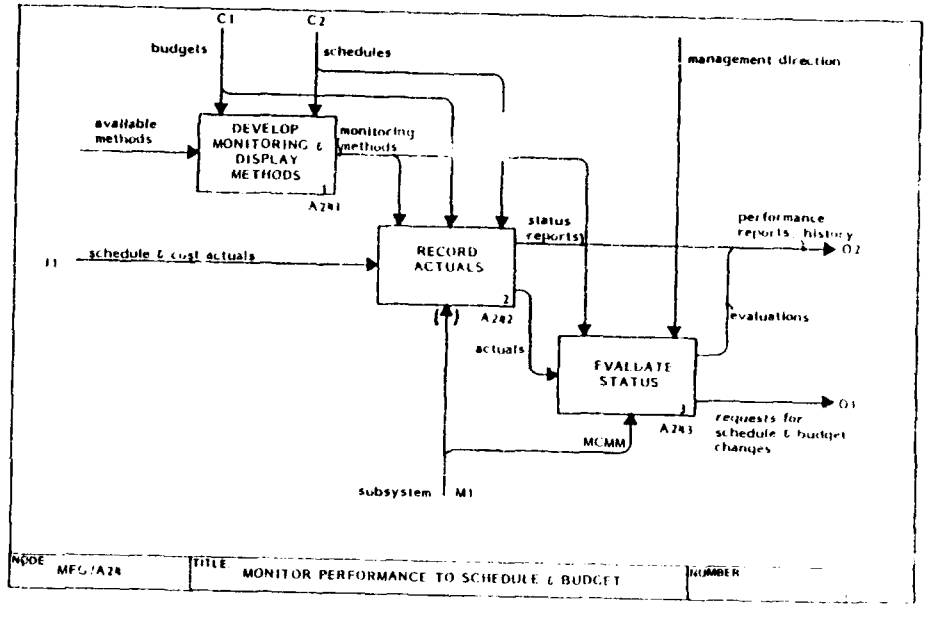

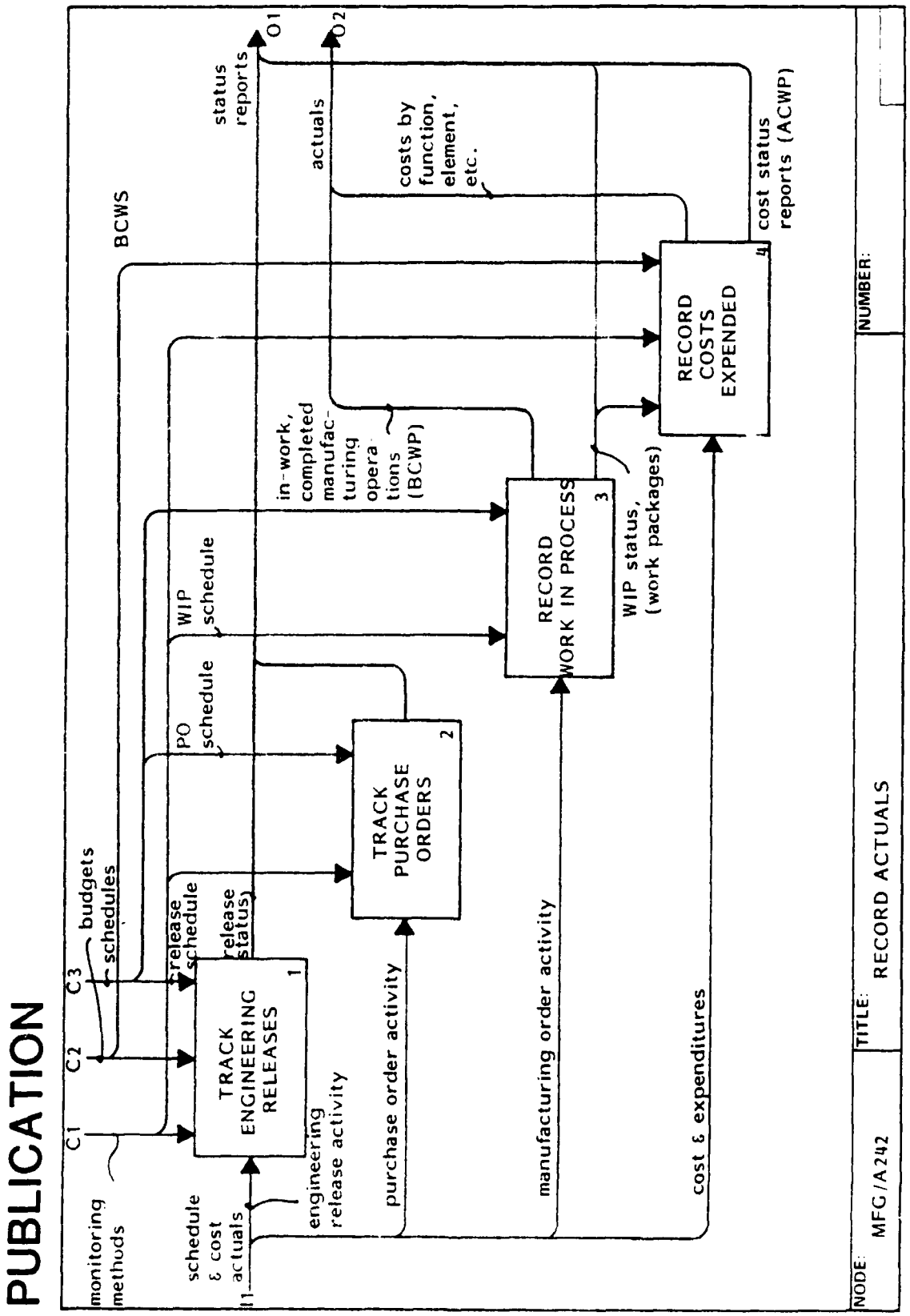
PUBLICATION
monitoring methods
C1
C2
C3
budgets
schedules
schedule & cost actuals
I1
TRACK ENGINEERING RELEASES
1
release schedule
release status
engineering release activity
PO schedule
TRACK PURCHASE ORDERS
2
purchase order activity
WIP schedule
RECORD WORK IN PROCESS
3
manufacturing order activity
in-work, completed manufac-turing opera-tions (BCWP)
WIP status, (work packages)
BCWS
status reports
O1
actuals
O2
costs by function, element, etc.
RECORD COSTS EXPENDED
4
cost & expenditures
cost status reports (ACWP)
NODE:
MFG/A242
TITLE:
RECORD ACTUALS
NUMBER:

A243 Evaluate Status

This activity involves the comparison of actual data to preplanned schedule/cost event/milestones to ensure compatibility. Where a variance exists between actuals and projected schedule/cost, an impact analysis is performed for the purposes of developing and achieving an on schedule/cost position. Where the variance exceeds the allowable limits, requests for schedule/budget changes are prepared and submitted.

Glossary

Variance Analysis - Analysis of actuals data vs planned performance, i.e., BCWP, BCWS, ACWP, and EAC calculations; days ahead-of/behind schedule; line-of-balance measurements; etc.

Tolerances - Established levels (normally quantitative) of allowable variances.

Allowable Variances - Variances within acceptable tolerance levels.

Need for Adjustments - Variances exceeding tolerance levels which are correctable within existing costs and schedules.

PUBLICATION

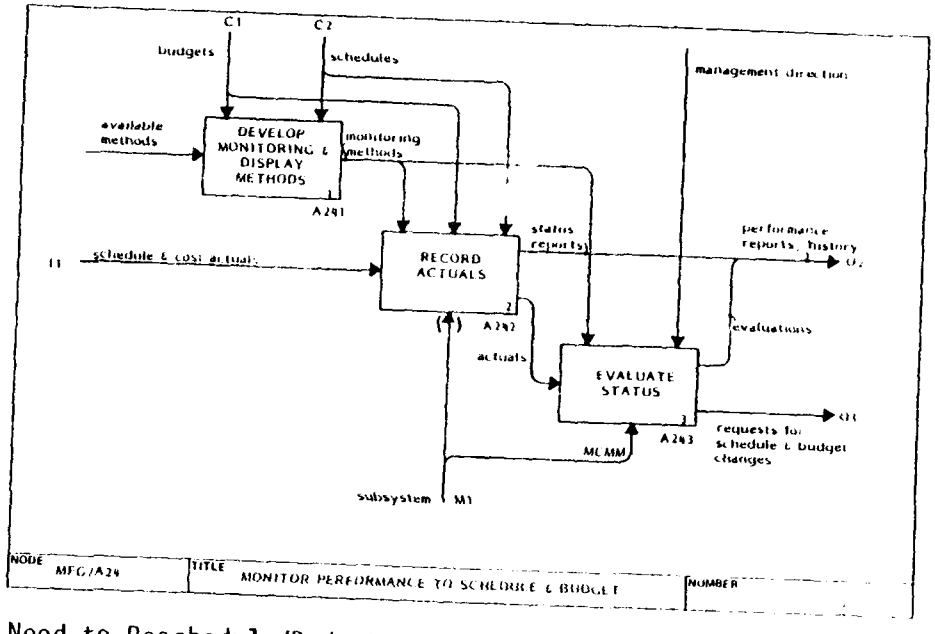

Need to Reschedule/Budget - Variances requiring corrective action by means of formal requests for change.

Workaround Plans - Actions to be taken which will not impact approved budgets or schedules (e.g., reassignment of skill levels, application of new technologies, etc.).

Problem Identification - Possible problem areas identified in the process comparing actuals to plans.

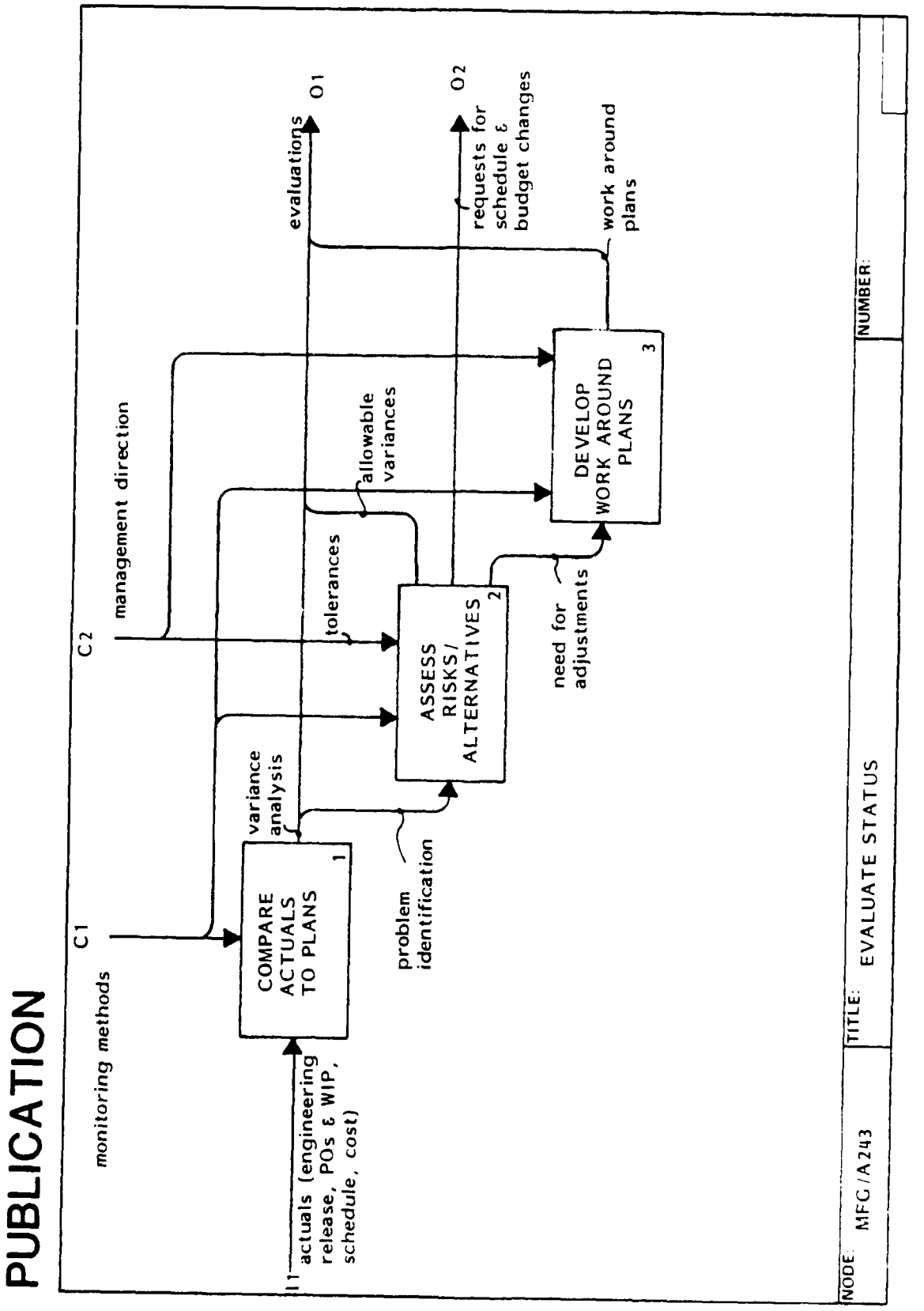
PUBLICATION
C1
monitoring methods
C2
management direction
I1
actuals (engineering release, POs & WIP, schedule, cost)
COMPARE ACTUALS TO PLANS
1
variance analysis
problem identification
ASSESS RISKS/ ALTERNATIVES
2
tolerances
allowable variances
need for adjustments
DEVELOP WORK AROUND PLANS
3
O1
evaluations
O2
requests for schedule & budget changes
work around plans
NODE:
MFG/A243
TITLE:
EVALUATE STATUS
NUMBER:

A3 Plan Production

The activity "Plan Production" has the overall task of converting engineering designs into detailed manufacturing methods which conform to the manufacturing plans.

Coordinating schedules (which give engineering release dates, planning needs dates, tool spec need dates, etc.) are expanded into detailed schedules for production planning which allow appropriate assignments to be made (Box 1).

For each engineering item (or changed item), a detailed manufacturing method is devised (Box 2). This involves identifying the manufacturing parts to the extent that they are planned to exist temporarily in different structures or in different forms from the engineering versions (for example, groups of parts may be put together into subassemblies not identified by engineering or holes may be omitted in detail parts and drilled after assembly to assure alignment), and identifying the tools to be used. Production plans and resource characteristics are necessary considerations in this task. This task is often performed by manufacturing engineers.

PUBLICATION

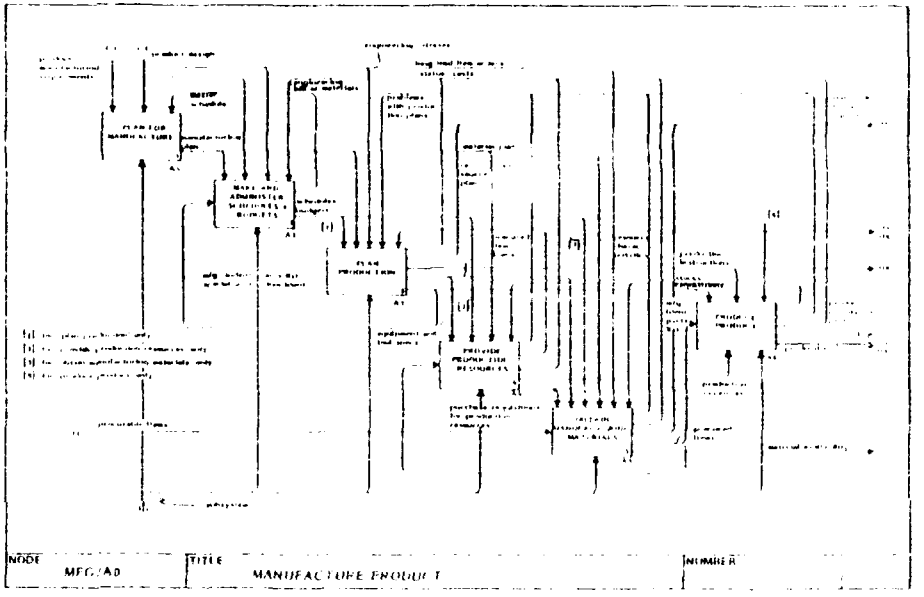

Detailed instructions for making each part are an elaboration of the detailed manufacturing method. In the process of making them (Box 3), specifications for tools and for procured items are produced. All these must be validated (Box 4) to be sure that the items produced or acquired will conform to the engineering design.

Throughout this whole process, there may be feedback to engineering in the form of engineering change requests (C3 output). Feedback to planning from tooling, procurement, and production comes in as "Requests for Change in Planning" (C3).

PUBLICATION

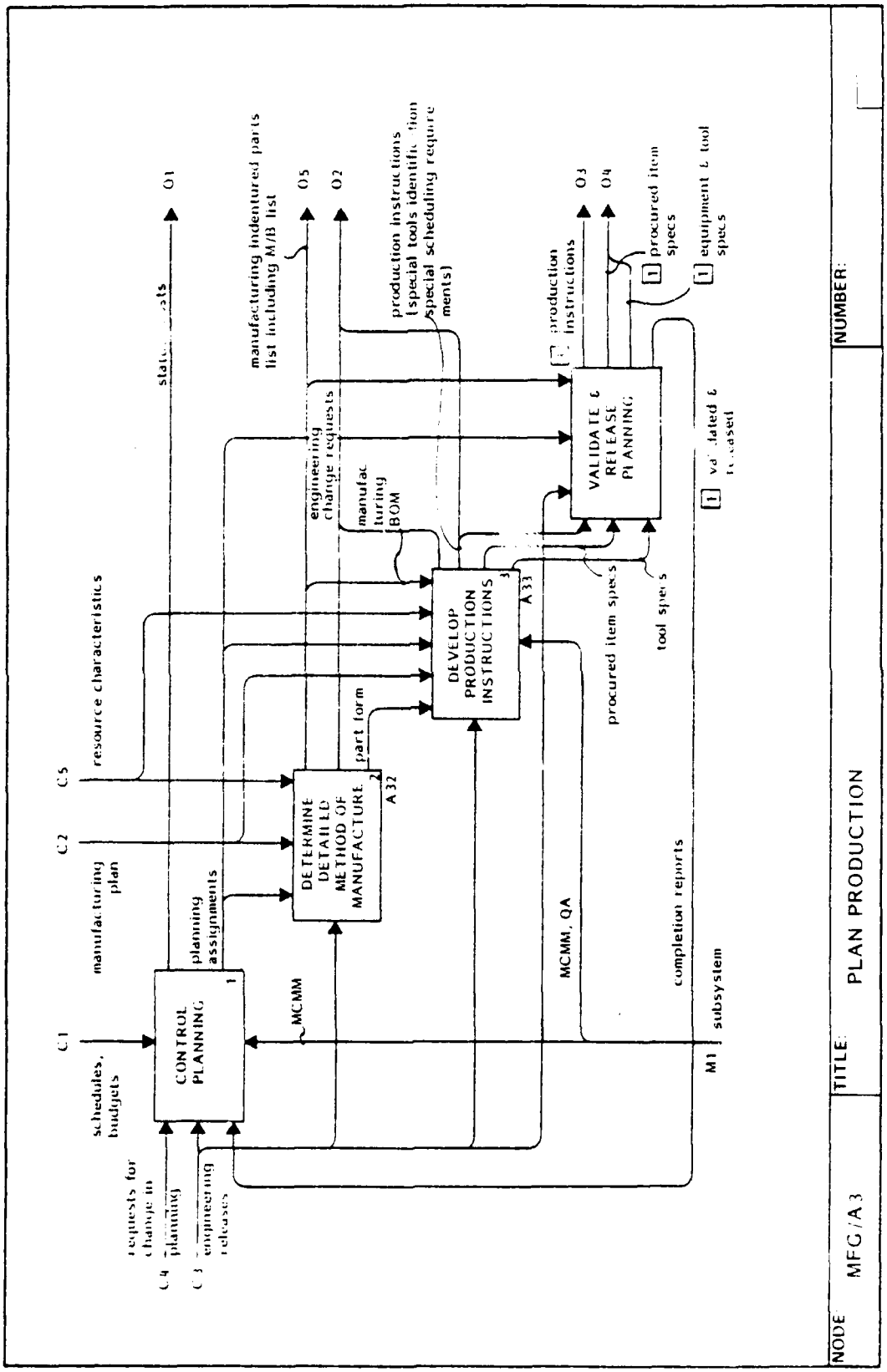

A3 Plan Production (con't)

Glossary

Planning Assignments - Specific planning task assignments derived from those schedules internal to planning which in turn were extensions of overall product schedules. They instruct planners at the proper time to process each engineering release item.

Complete Manufacturing Indentured Parts List - The total manufacturing bill of materials, all of the parts of the sub-parts of any given item as seen by manufacturing. It includes items which are procured rather than made.

Manufacturing Form of Part - The exact finished form which is desired for the parts to have. This is sometimes a variant on precisely what the engineering drawing describes (because it is convenient to postpone certain aspects until later assembly steps).

Tool Identification for Each Part- The identification (usually tool number and tool code) of each tool to be required may include customer control number).

Production Instructions - The detailed instructions specifying how to make the part. It includes the operations and departments in their sequence plus any relevant specifications of how these operations are to be performed. In addition, it includes the manufacturing indentured parts list.

Tools Specification - The complete specification of what a tool is to be and what it is to do. It is not the design of a tool, but that information that can go to the designer of the tool.

Procured Item Specification - The complete specification of an item that is to be obtained (so that it can be ordered from a vendor). I includes the instructions for inspecting the procured item.

Engineering Change Request - Request that the design of a product be changed in some manner (to improve form, fit, function, producibility, etc.).

Request for Change in Planning - Includes any problems encountered in manufacturing for which it would be best to change the production instructions, problems in designing or obtaining tools for which a change would help, or problems in the specification of a procured item for which a change is required or desirable.

Complete Manufacturing Indentured Parts List - The complete structure of the product as seen by manufacturing -- what the parts are that are assembled to make it, and for each of these the parts assembled to make it, etc., down to the

A3 Glossary (con't)

lowest level detail or the lowest level purchased part.

Manufacturing Bill of Material - The list of subparts of any single part which is to be made. This pertains only to subassemblies and upward in the product.

Resource Characteristics - The characteristics and capabilities of facilities, equipment or tools so that appropriate plans can be made to match those -- particularly, characteristics of equipment so that the proper tools can be specified to be used with that equipment and so that tasks can be assigned appropriately to that equipment.

A32 Determine Detailed Method of Manufacture

This activity converts, in Box 1, the engineering release into the manufacturing indentured parts list. Using this parts list, together with the manufacturing plan, Box 2 outputs a make or buy decision for each part. For those parts that are to be made, Box 3 outputs the precise manufacturing form of the part or sub-part. Engineering change requests may be initiated by any of the activities of this diagram.

Glossary

Identification of Make Parts - (Obvious)

Make-Buy Decision - (Obvious)

Part (Subpart) Form - The intermediate level form of a part which is ready to be used in the assembly of another, larger part. The intermediate (normally unfinished) form of a part, which is considered to constitute its end form, as it is forwarded to its next use. Its complete form will normally be produced on a subsequent assembly.

PUBLICATION

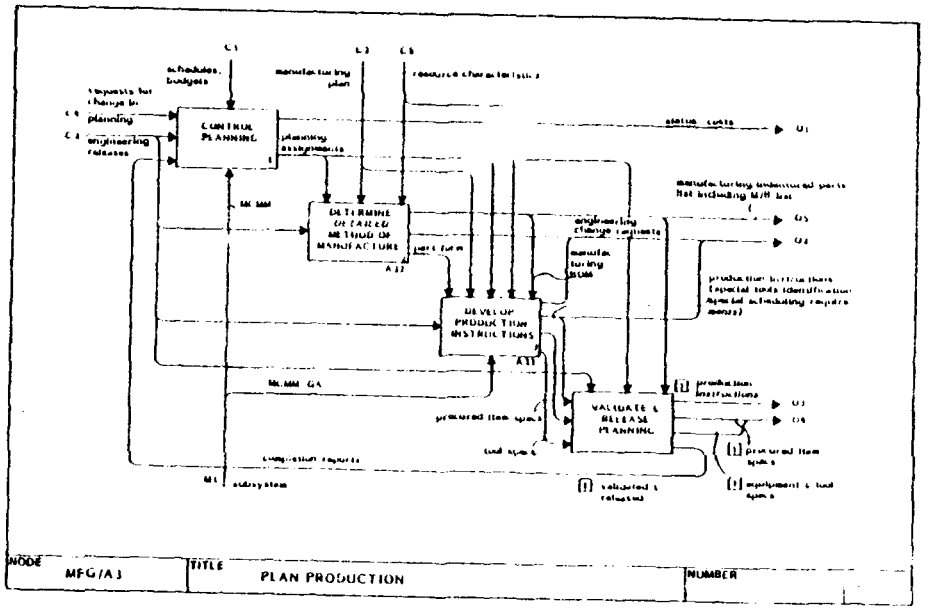

FTR110410000U
8 September 1983

PUBLICATION

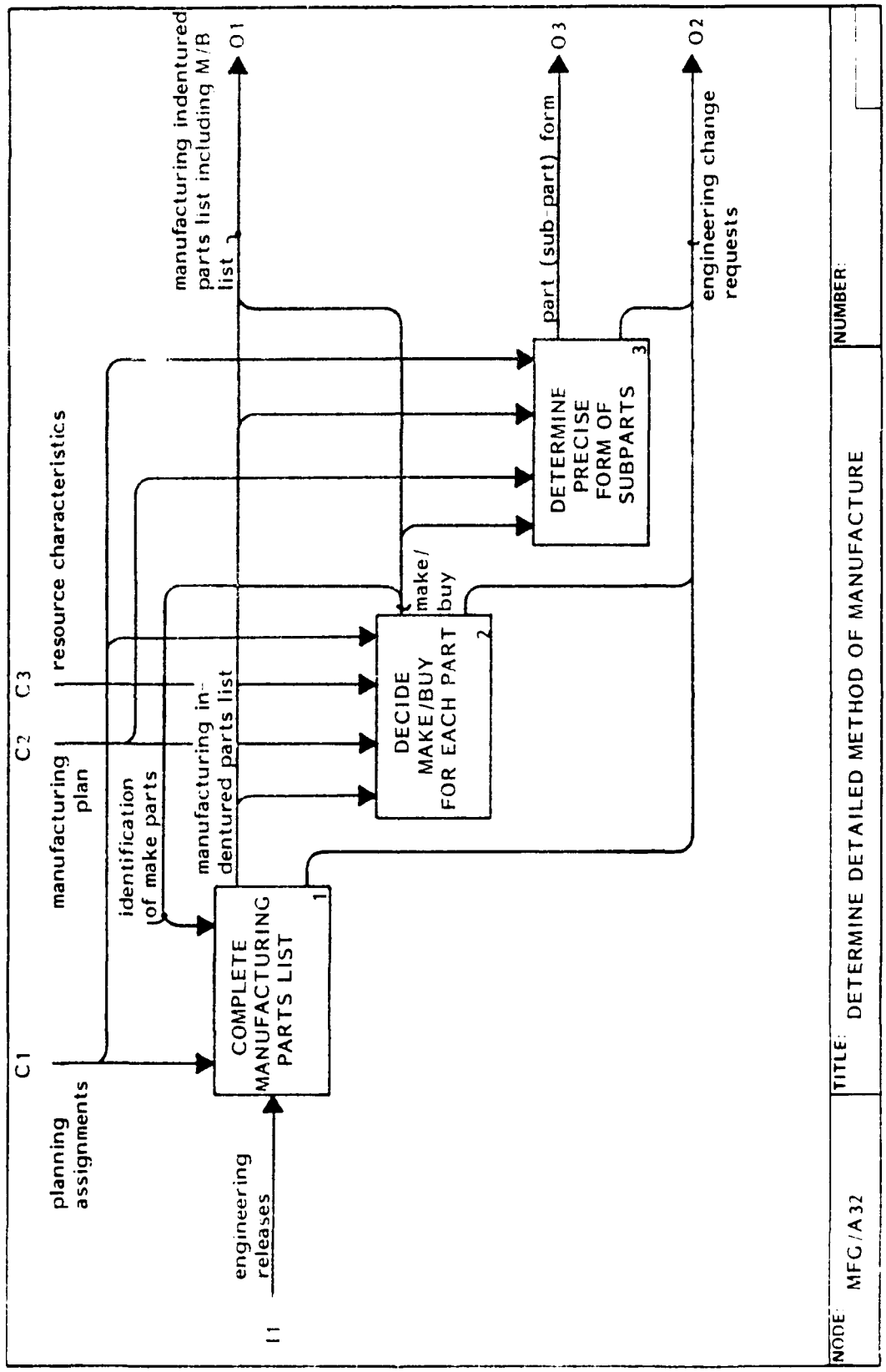

A33 Develop Production Instructions

This activity splits the planning of the production instructions into four separate areas; Plan Line Assemblies and Installations (Box 1), Plan Batch Assemblies (Box 2), Plan Detailed Parts (Box 3), and Plan for Procured Items (Box 4).

Each of these activities converts the engineering release and change orders into an appropriate set of production instructions. Procured item specs are outputs from either the detailed parts plan or the procured items plan. Engineering change requests can be originated from any of these activities.

PUBLICATION

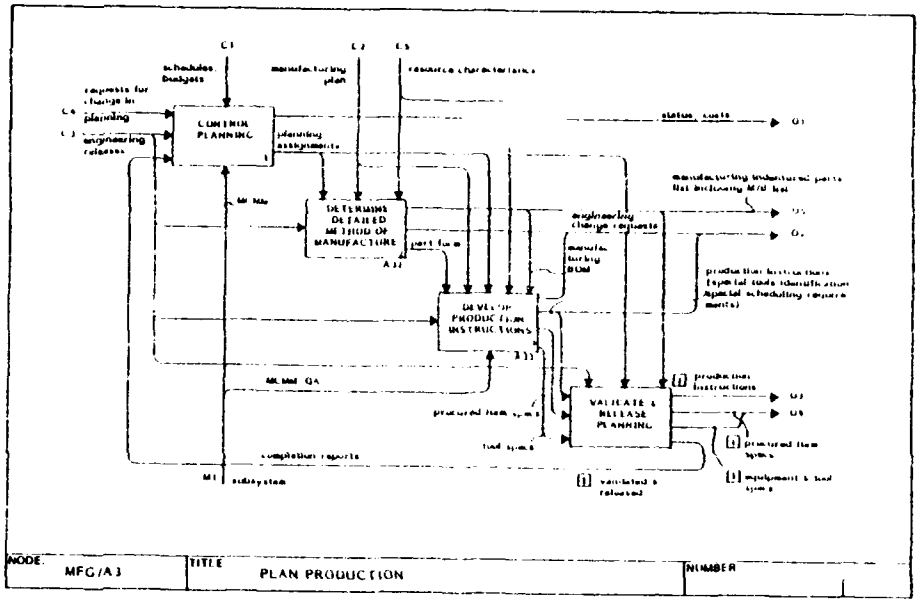

PUBLICATION

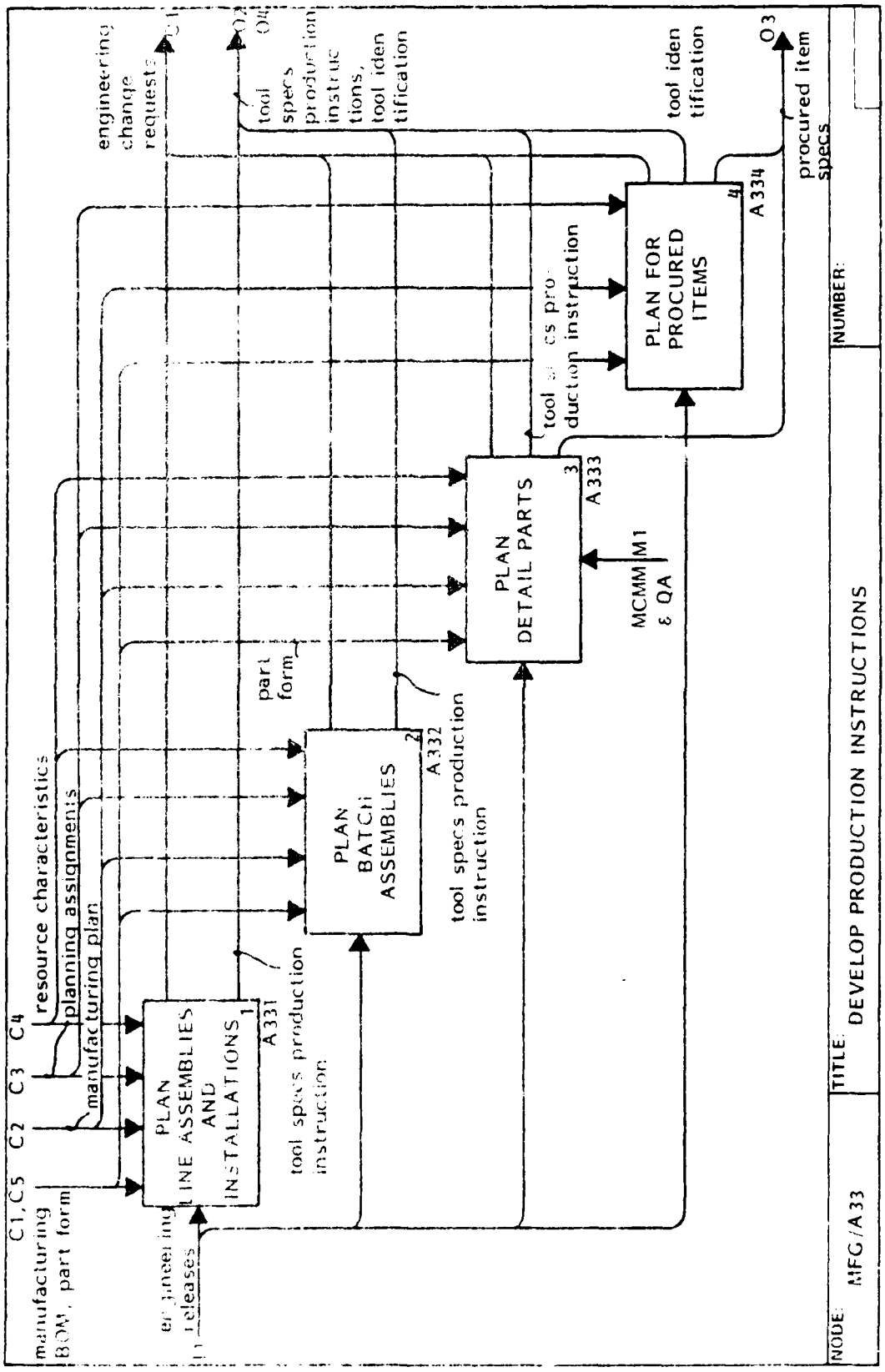

A331 Plan Line Assemblies and Installations

The engineering release, bill of material, and part form, are used in Box 1 to establish the finished item requirements. These requirements are converted, in Box 2, to the outline of steps required for the assembly or installation. Any tools necessary for these steps are also identified in Box 2. At this point, Box 3 details the assembly or installation steps into a set of production instructions. Included with these instructions are the times that apply to the production steps.

Glossary:

Outline of Steps - A preliminary plan of the gross approach to assemble or install on the production line.

Instructions - Detailed description of the manufacturing process steps required to assemble or install line assemblies or installations, with a notation of the tools and parts required to accomplish assembly or installation. Detail sequencing of the parts, components and subassemblies with notation of tools required and operations to be performed on the production line.

Time - The standard times derived for each work task on through production line.

Problems in Planning - Situations wherein the detail steps cannot be developed in accordance with the outline of steps.

PUBLICATION

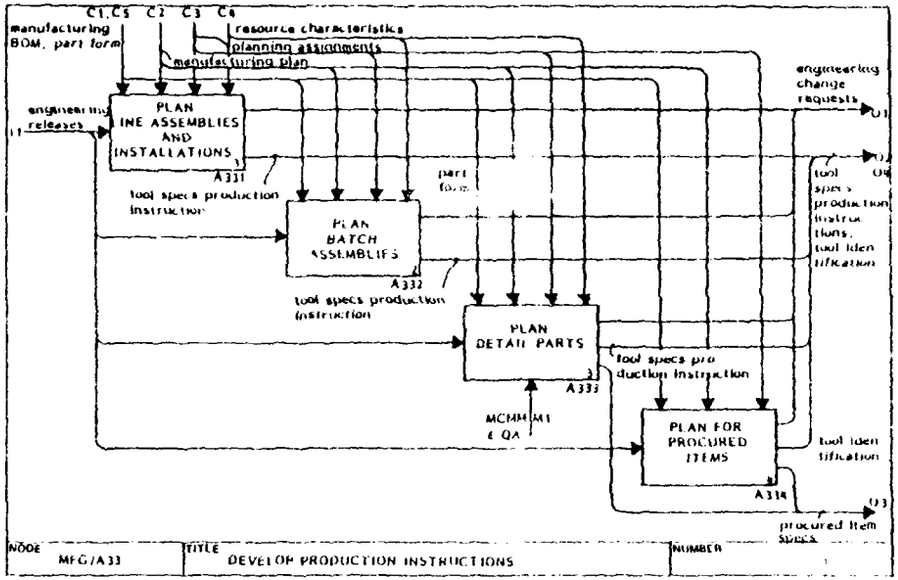

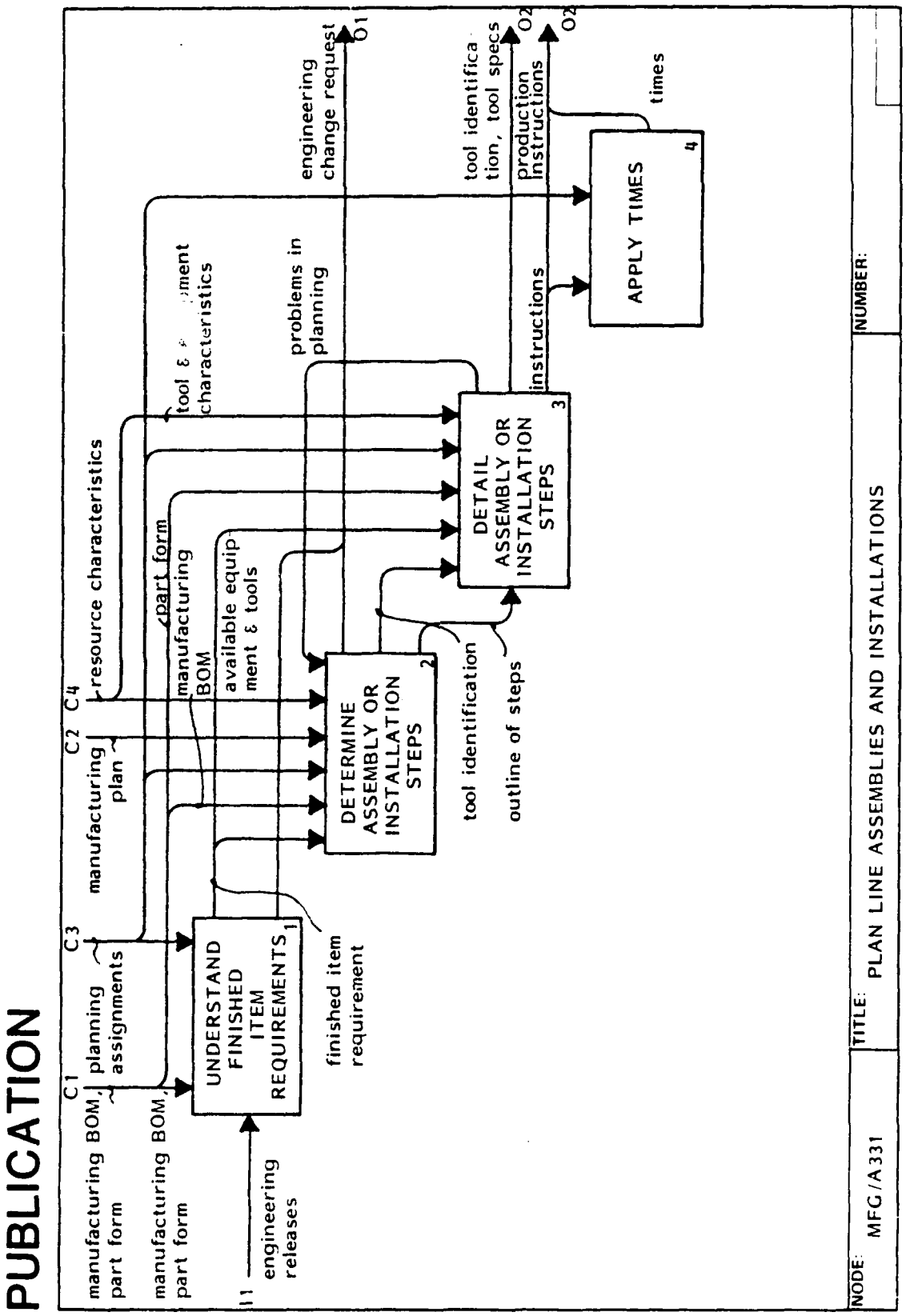
PUBLICATION
manufacturing BOM, part form
manufacturing BOM, part form
C1
planning assignments
C3
manufacturing plan
C2
C4
resource characteristics
I1
engineering releases
UNDERSTAND FINISHED ITEM REQUIREMENTS
1
finished item requirement
part form
manufacturing BOM
available equipment & tools
tool & equipment characteristics
DETERMINE ASSEMBLY OR INSTALLATION STEPS
2
tool identification
outline of steps
problems in planning
DETAIL ASSEMBLY OR INSTALLATION STEPS
3
instructions
engineering change request
O1
tool identification, tool specs
O2
production instructions
O2
APPLY TIMES
4
times
NODE:
MFG/A331
TITLE:
PLAN LINE ASSEMBLIES AND INSTALLATIONS
NUMBER:

A332 Plan Batch Assemblies

The engineering release, bill of material, and part form, are used in Box 1 to establish the finished assembly requirements. Box 2 then converts these requirements into an outline of the batch assembly steps. At this point any tools which are required for these steps are identified. Box 3 then develops a detailed set of production instructions for each assembly. The routing instructions and any times and costs associated with the assembled steps are developed in Boxes 4 and 5, respectively, and become part of the production instructions for batch assemblies.

Glossary:

Finished Assembly Requirements - The completed manufacturing form and part content of the assembly.

Batch Assembly Outline - A preplan of the gross approach for assembly.

Instructions - Detail sequencing of the parts, components and subassemblies with notation of tools required and operations to be performed in assembly.

PUBLICATION

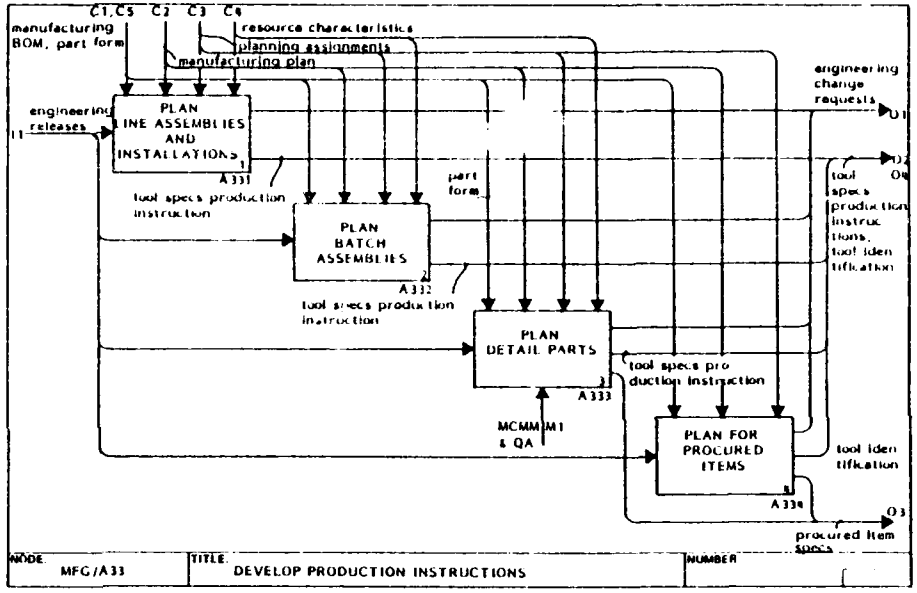

PUBLICATION

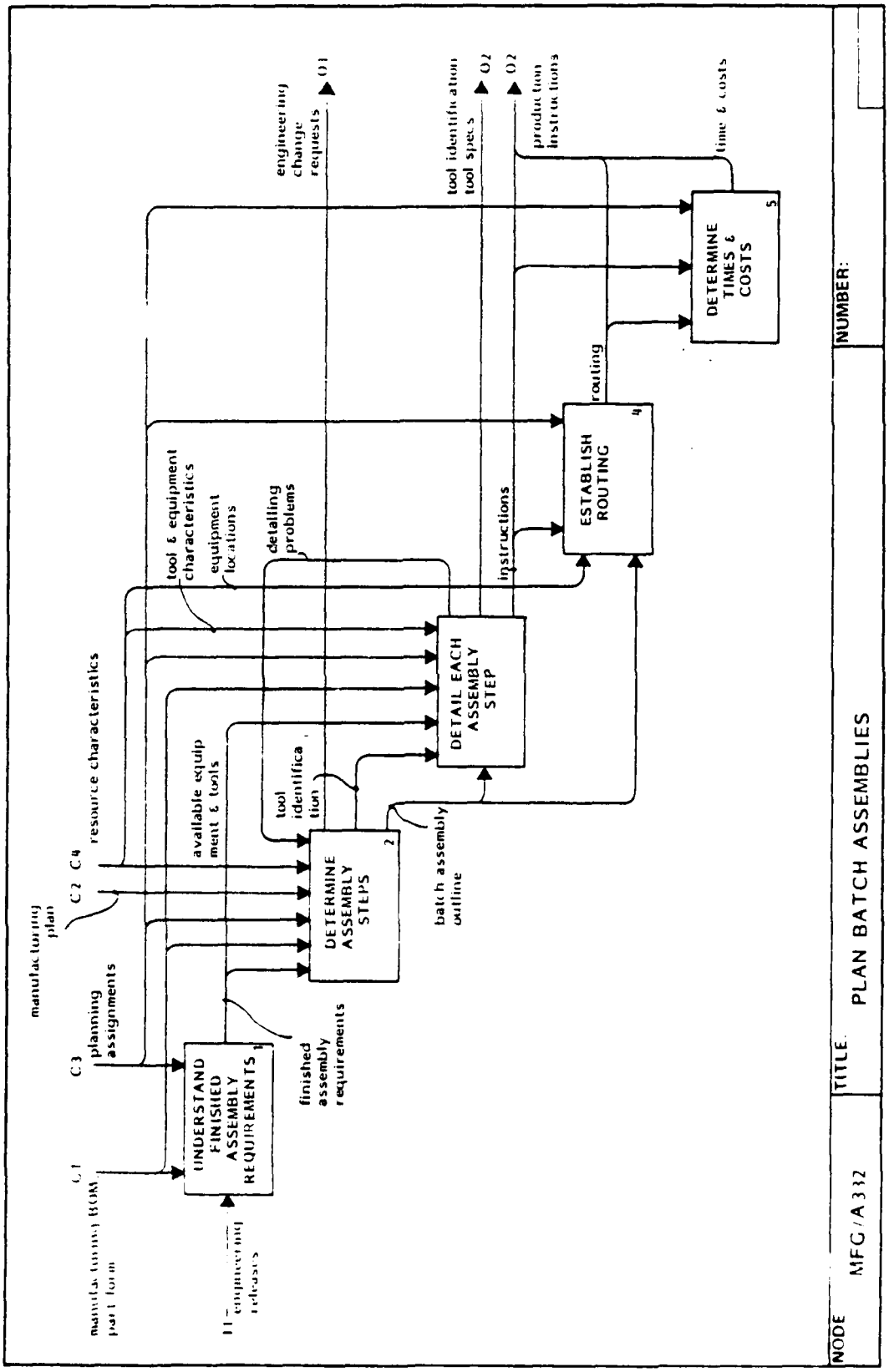

A333 Plan Detail Part

The engineering release and part form are used in Box 1 to establish the requirements for the finished part. These requirements are converted in Box 2 to a specification of the raw material form. Box 3 then determines the outline of the fabrication steps for the detailed part. Any tools required for these steps are identified in Box 3. In addition any problems encountered in the form of the raw materials are fed back to Box 2. From the outline of the fabrication steps, Box 4 develops a detailed set of production instructions. At this point any routing information or fabrication items are added to those instructions.

Glossary:

Finished Part Requirements - The desired manufactured form (complete or incomplete) of the part.

Raw Material Form - The size, shape, and characteristics of the raw or semifinished material as it exists prior to the first fabrication step to be detailed.

PUBLICATION

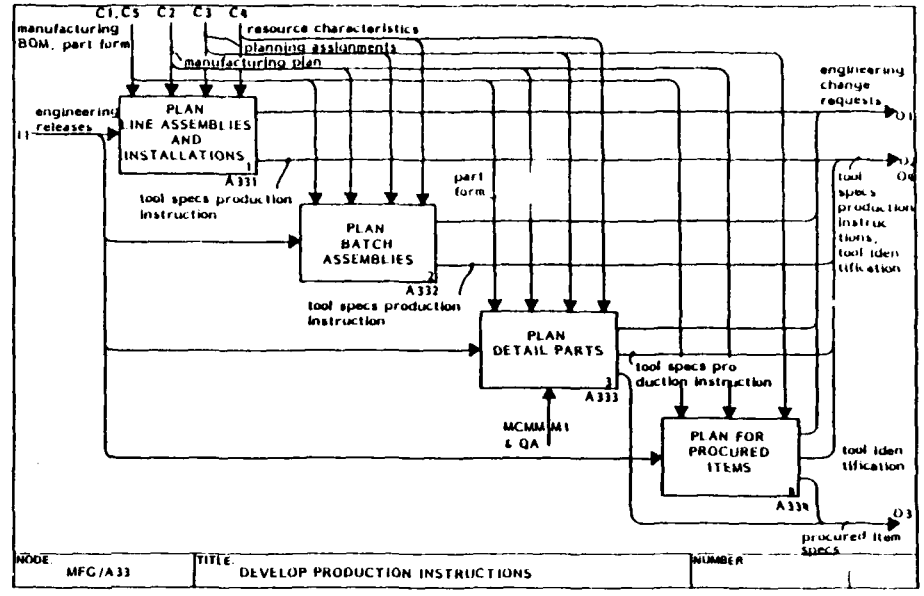

Routine - The designation of the various locations in successive order at which the fabrication and processing operations occur.

PUBLICATION

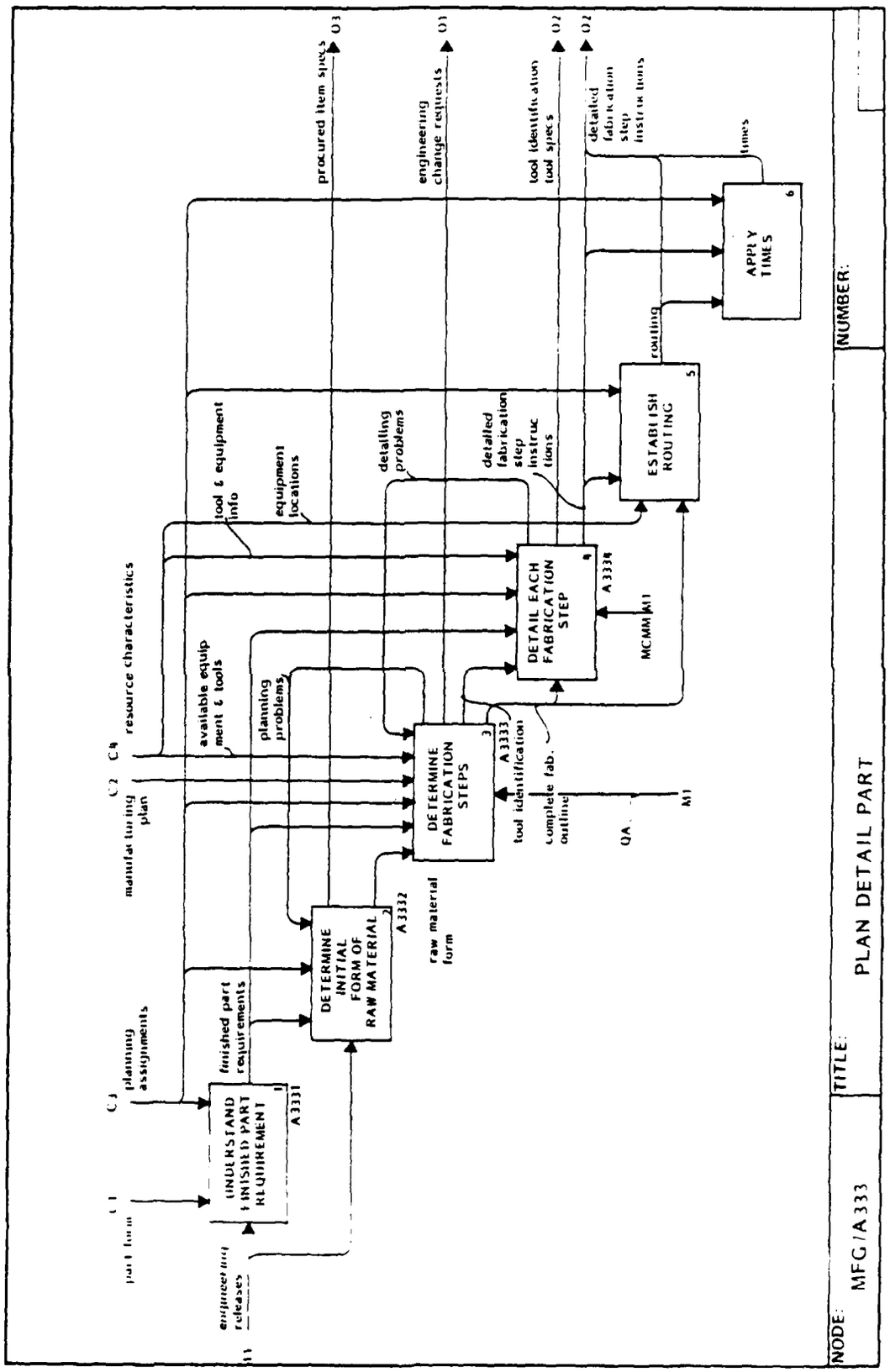

A3331 Understand Finished Part Requirements

The function of this diagram is to quantify the four essential elements of the finished part requirements. Those elements are the geometric requirements, tolerance requirements, material condition requirements, and part finish requirements (Boxes 1 through 4, respectively).

Glossary:

Geometric Requirements - The finished part shape.

Tolerance Requirements - Dimensional limits within which the element of part geometry must fall in order to be acceptable for its next use.

Final Condition Requirements - Specified material strength or condition which involve application of thermal treatment.

Finish Requirements - Surface treatment required such as chemical processing, plating, coatings, and other process treatments.

PUBLICATION

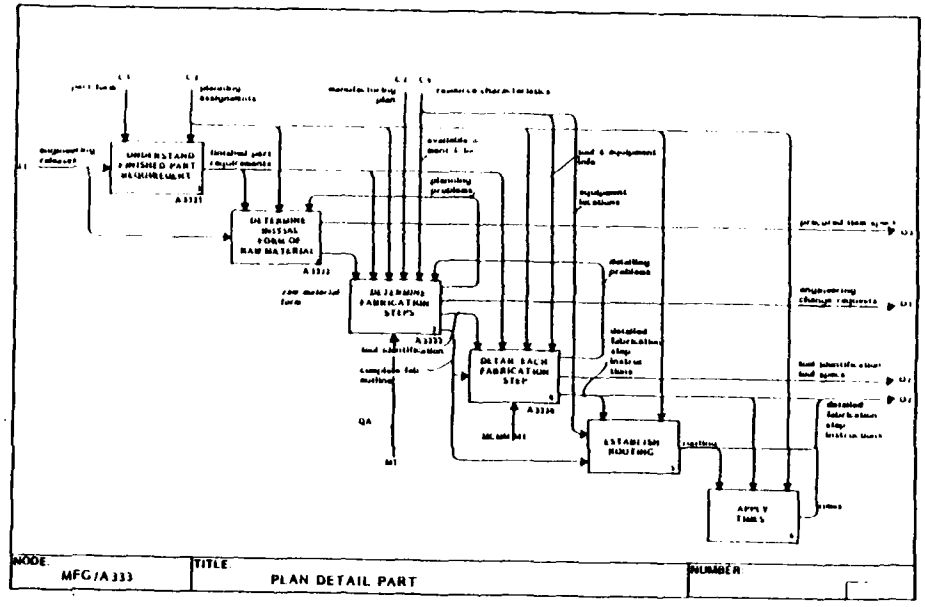

PUBLICATION

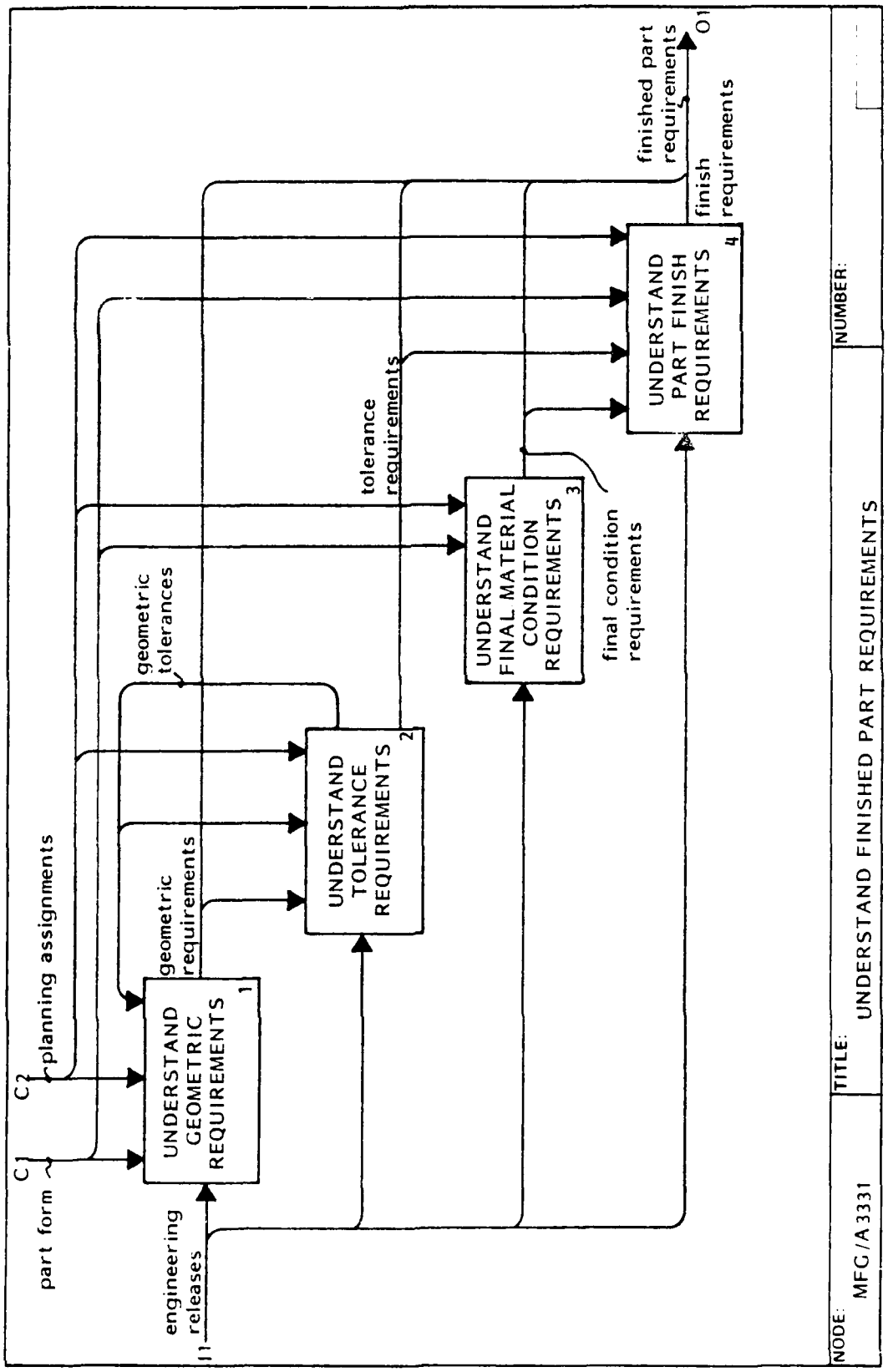

A3332 Determine Initial Form of Raw Materials

The finished part requirements, together with the engineering release, are converted into the available material options by Box 1. Box 2 then established the initial form of the materials and provides the evaluations for each of the options. Box 3 selects from the options to yield the desired initial form and condition of the materials.

Glossary:

Available Options - Material types, alloys, or state of treatment which differ from the specified material but have been determined to be acceptable and are authorized for use.

PUBLICATION

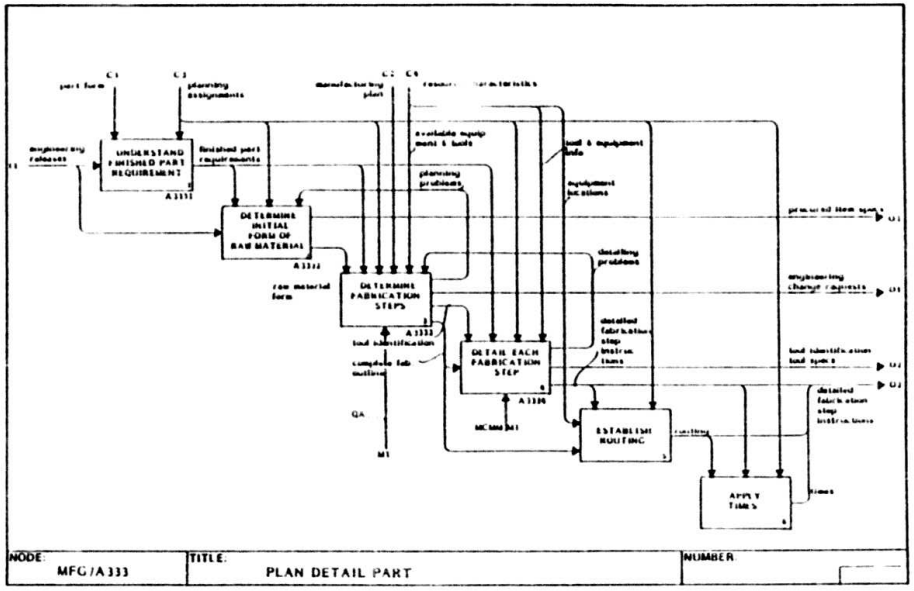

PUBLICATION

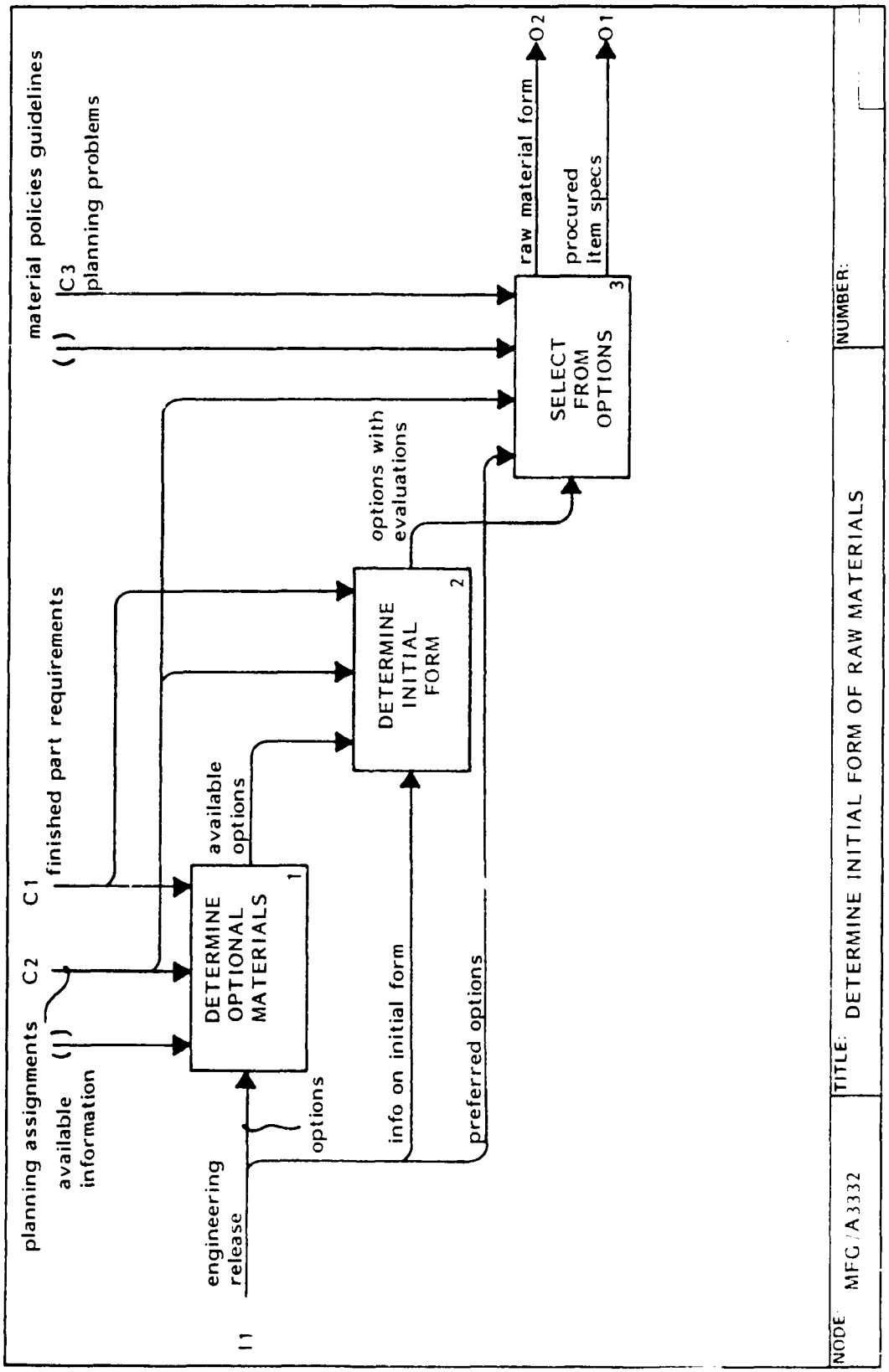

A3333 Determine Fabrication Steps

Box 1 compares the raw material form against the finished part requirements to establish a statement of the work to be done. The Statement is then converted, in Box 2, to an outline of the fabrication operations. This outline is used, in Box 3, to provide an outline of the inspection steps involved in the fabrication. Both the fabrication outline and the inspection outline provide Box 4 with the tools for the various steps. These outlines are also used by Box 5 to determine the complete sequence for the fabrication process.

Glossary:

Fabrication Operations - Normal factory functions such as machining, welding, forming, coating, plating, etc., including operations necessary to transform large as-procured, raw material elements into the smaller raw material segments required in order to initiate the fabrication steps.

Inspection Steps - The actions necessary to measure or test the features or attributes of manufactured items that will determine their compliance with the product definition requirements.

PUBLICATION

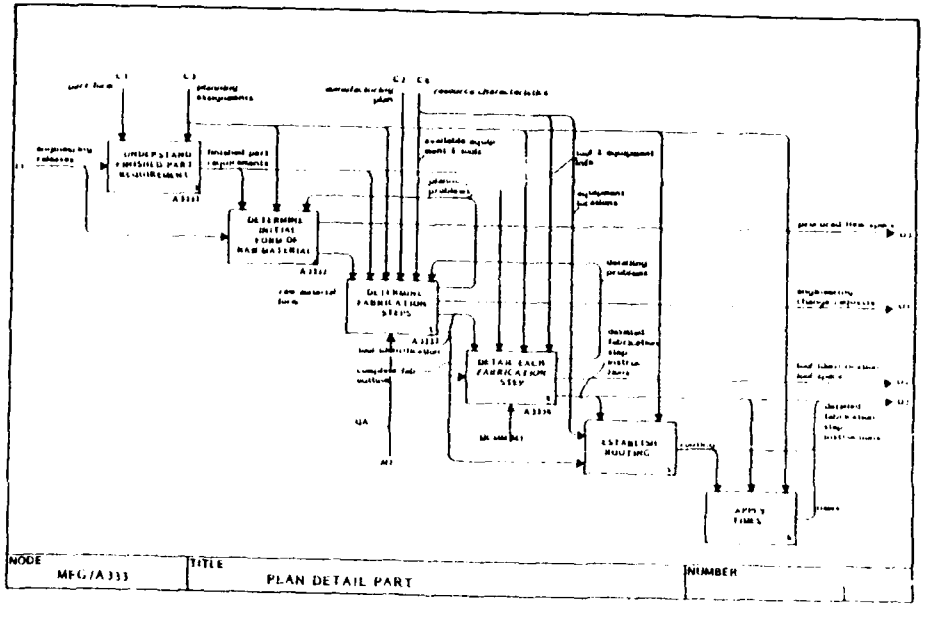

Complete Fabrication Outline - Combinations of any or all of the above to produce items "as specified."

PUBLICATION

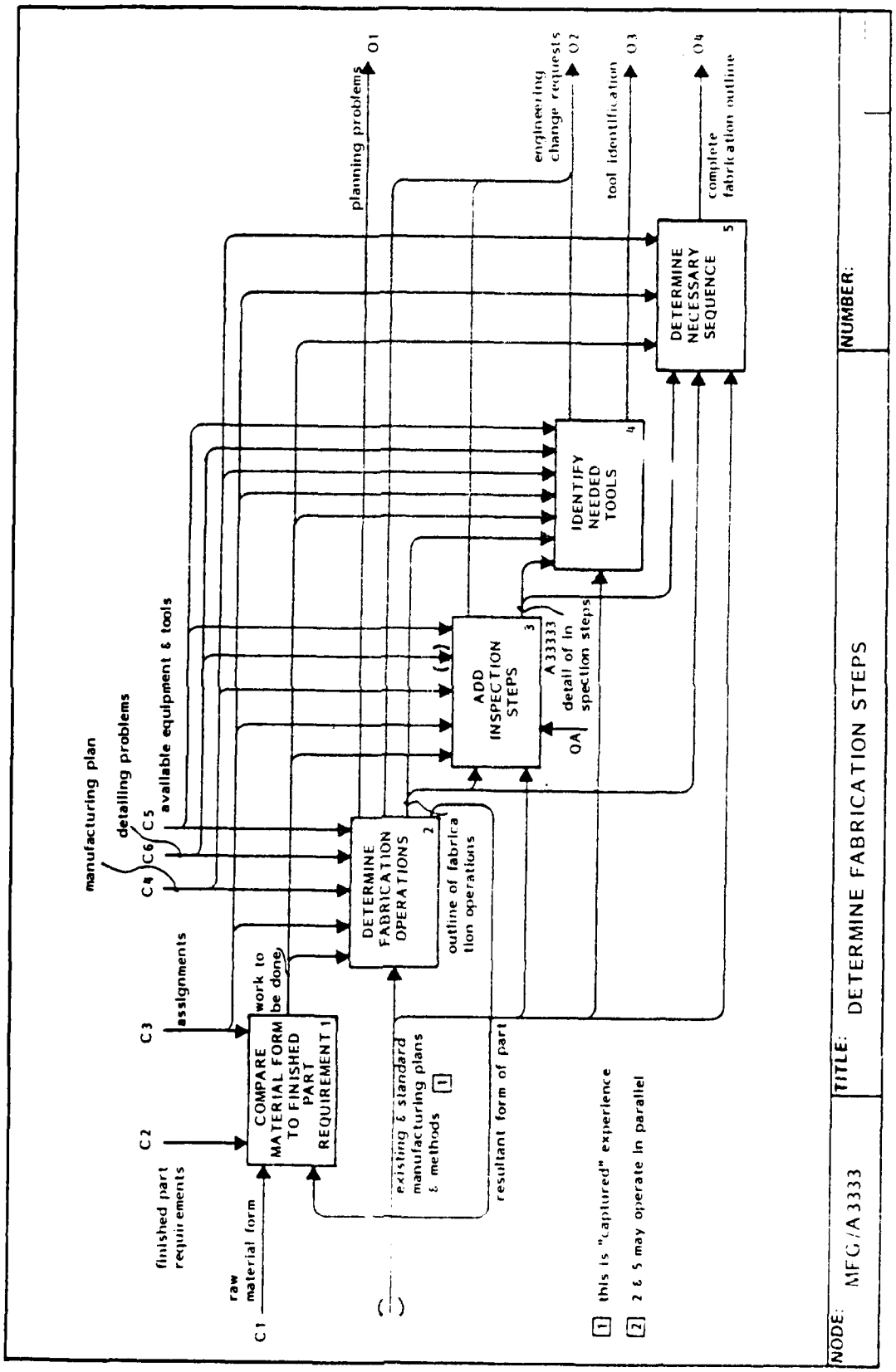

A33333 Add Inspection Steps

Critical quality characteristics are determined by reviewing design drawings for QA inputs and related specifications. Recommended changes to design specifications are made by QA based on trends and experience.

Production process planning is reviewed to determine critical-to-quality test, inspection and control points.

Existing test/inspection instructions are selected where appropriate and new instructions are generated where required, the result being detailed QA/QC work instructions integrated with the manufacturing process planning.

PUBLICATION

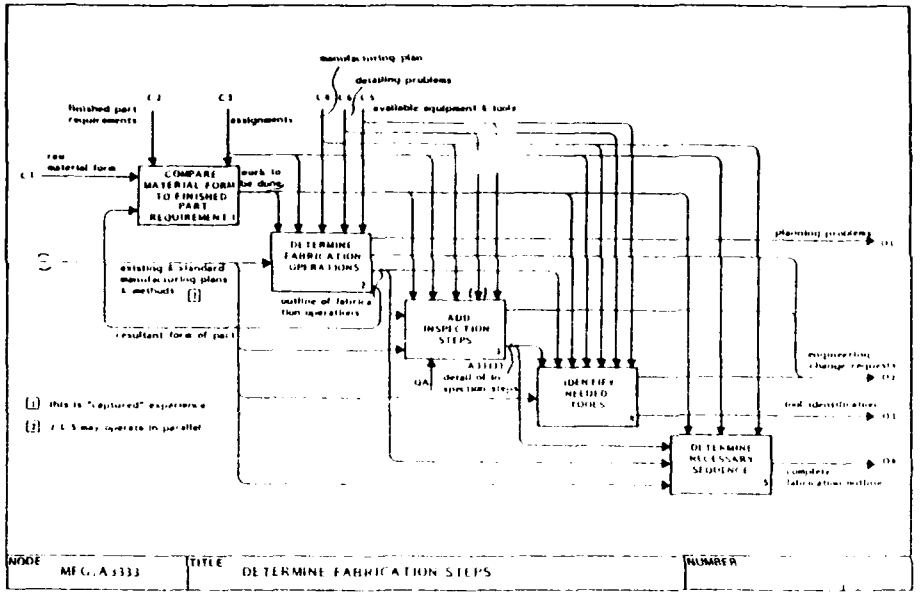

FTR110410000
8 September 1983

PUBLICATION

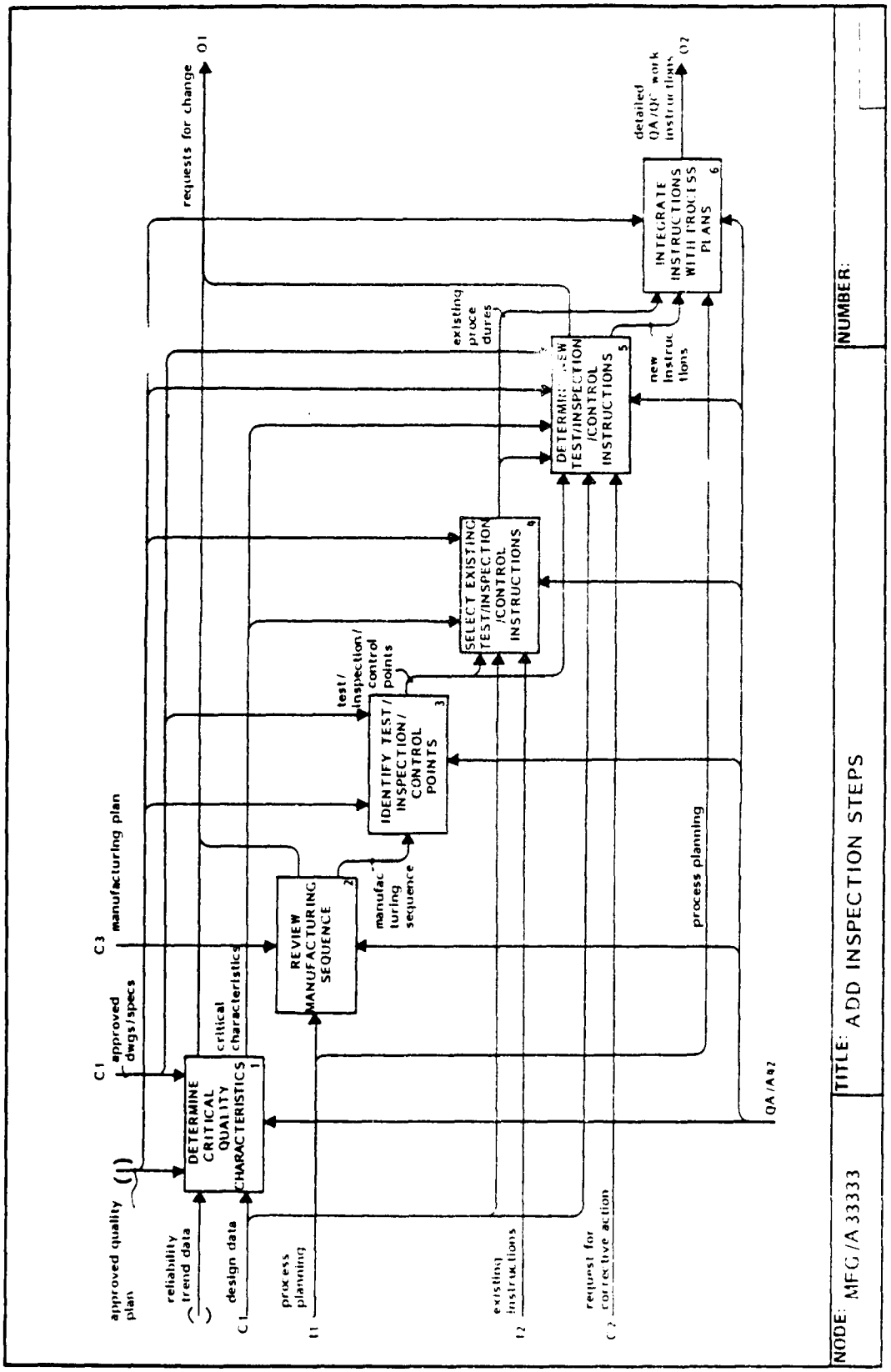

A3334 Detail Each Fabrication Step

Box 1 provides an outline of work to be done in each step. This outline is used in Box 2 to select the specified machine type required for the fabrication. Knowing the machine allows Box 3 to determine the machine setup and the tool setup. Box 4 uses this setup information to provide the tool specifications for the fabrication step. Box 5 then uses the outline of the work to be done, the part and tool set-up information, and the tool specifications to provide a set of detailed instructions for the fabrication step.

Glossary:

Part and Tool Setup - The relationship of the piece part, the tools that interact with it and the machine or equipment which all act together to perform a specified operation.

PUBLICATION

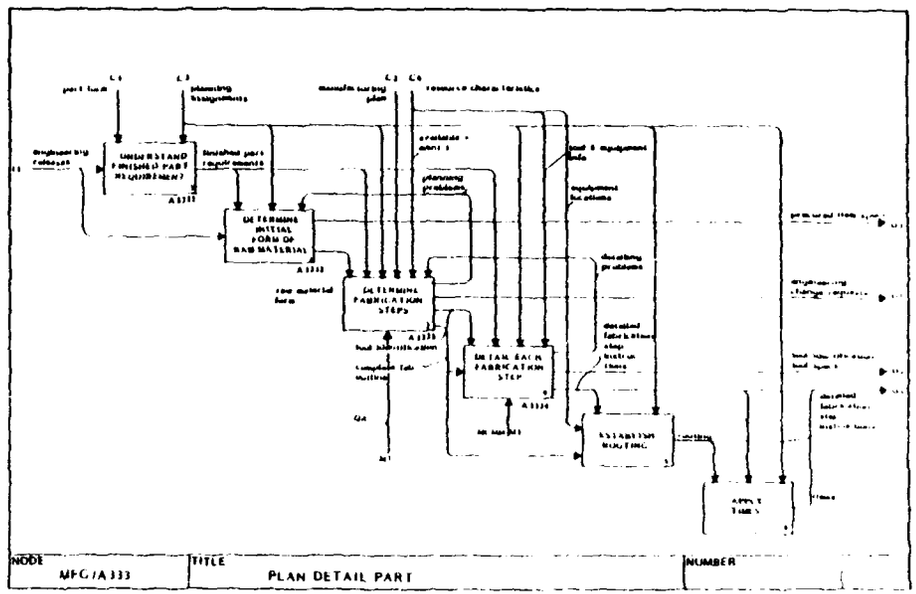

PUBLICATION

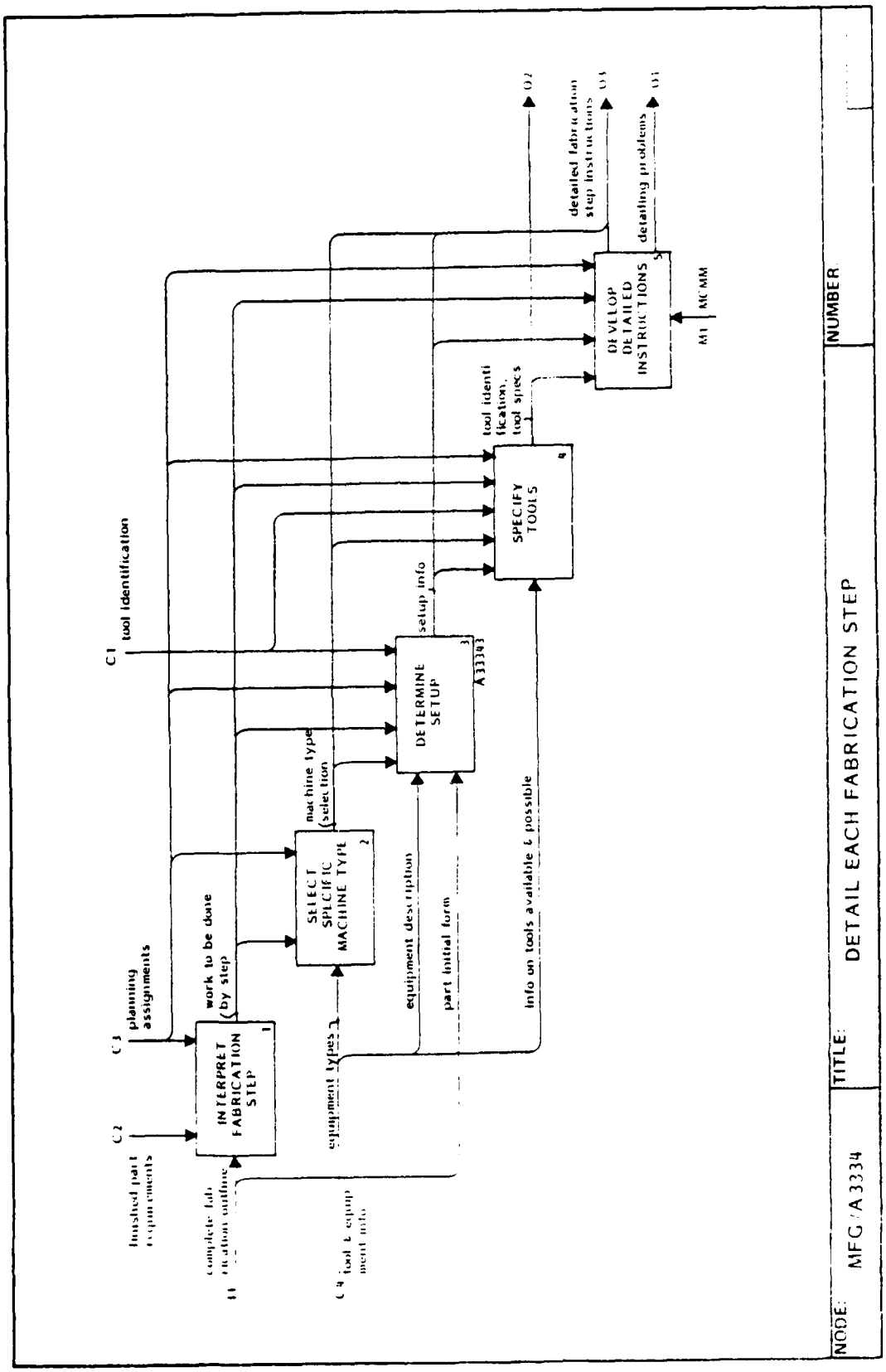

A33343 Determine Setup

This activity provides the set-up information for the item, tool, and machine setups (Boxes 1 through 3 respectively), for each fabrication step.

PUBLICATION

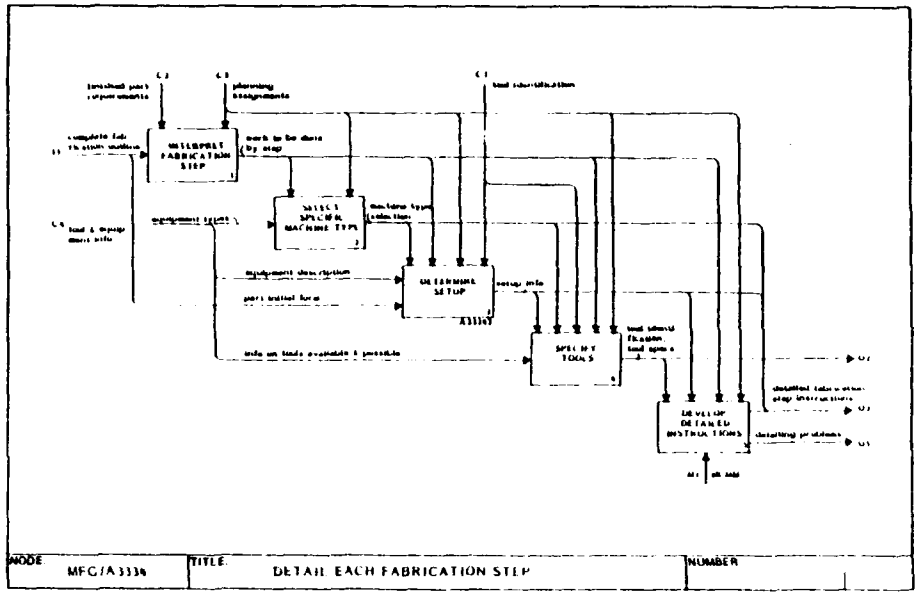

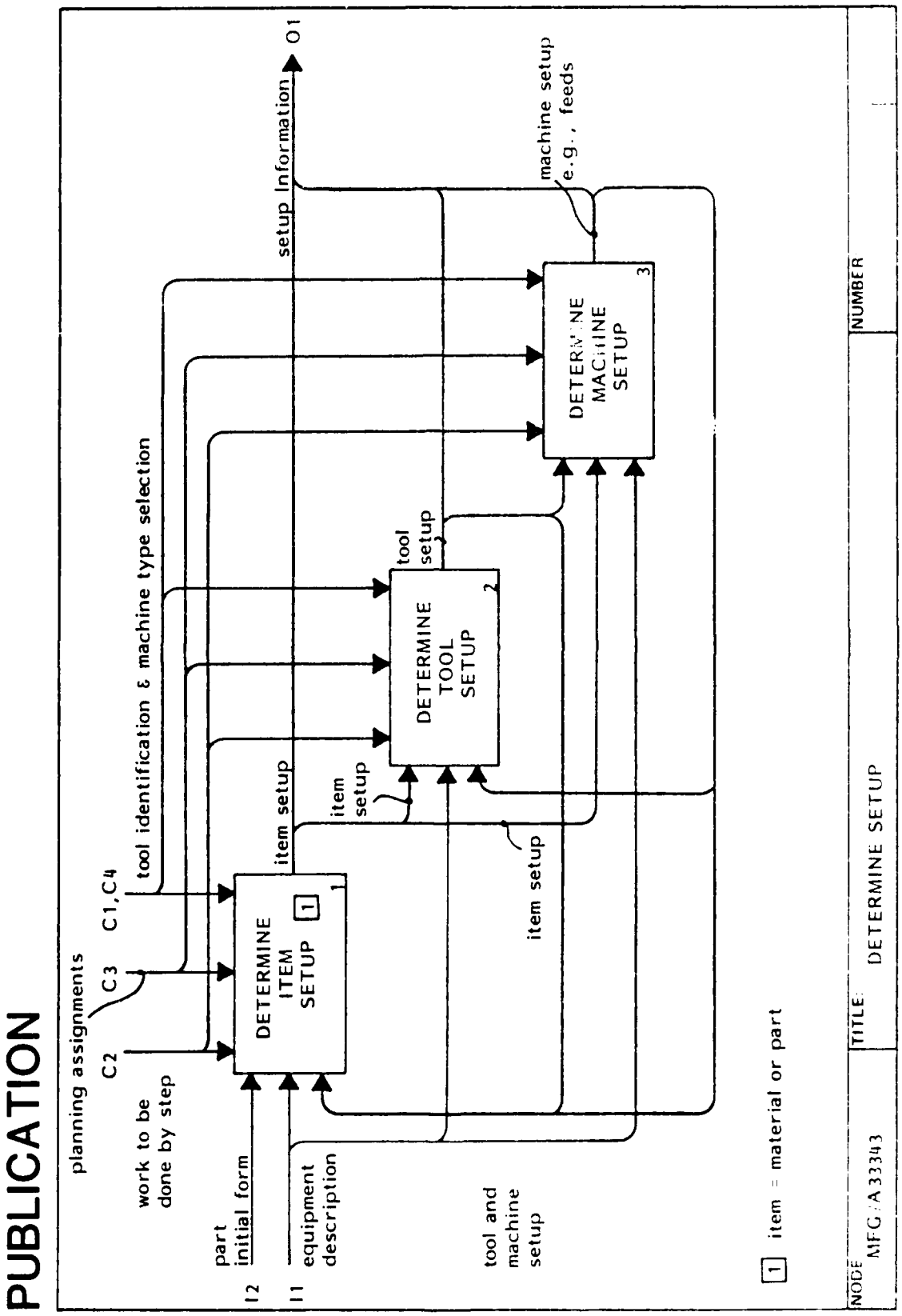
PUBLICATION
planning assignments
C2
C3
C1,C4
work to be done by step
tool identification & machine type selection
part initial form
I2
equipment description
I1
DETERMINE ITEM SETUP
1
1
item setup
item setup
DETERMINE TOOL SETUP
2
tool setup
item setup
tool and machine setup
setup information
O1
DETERMINE MACHINE SETUP
3
machine setup e.g., feeds
1 item = material or part
NODE
MFG/A33343
TITLE
DETERMINE SETUP
NUMBER

A334 Plan for Procured Items

The bill of material, including the part form and any tool identification required, is used in Box 1 to specify the delivery configuration of the item. This specification then is used in Box 2 to determine the manufacturing method of the procured part. Box 3 uses these two specifications to develop a receiving inspection plan. This plan is subsequently used, in Box 4, to identify the needed tools to perform the receiving inspection.

Glossary

Item Specification - The desired form of items to be procured, which may differ from the product definition of the engineering function due to manufacturing requirements. Also includes inspection steps and destination for storage or next use.

PUBLICATION

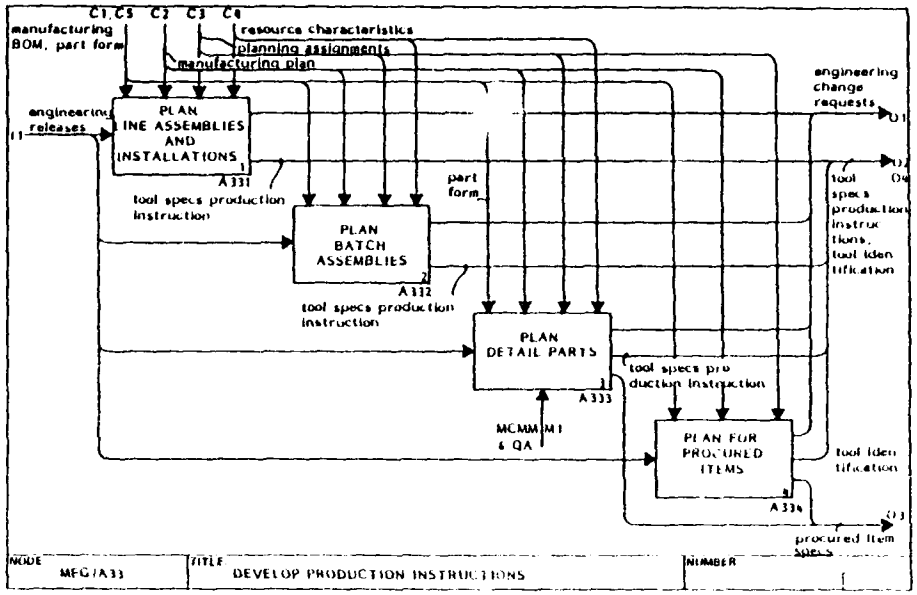

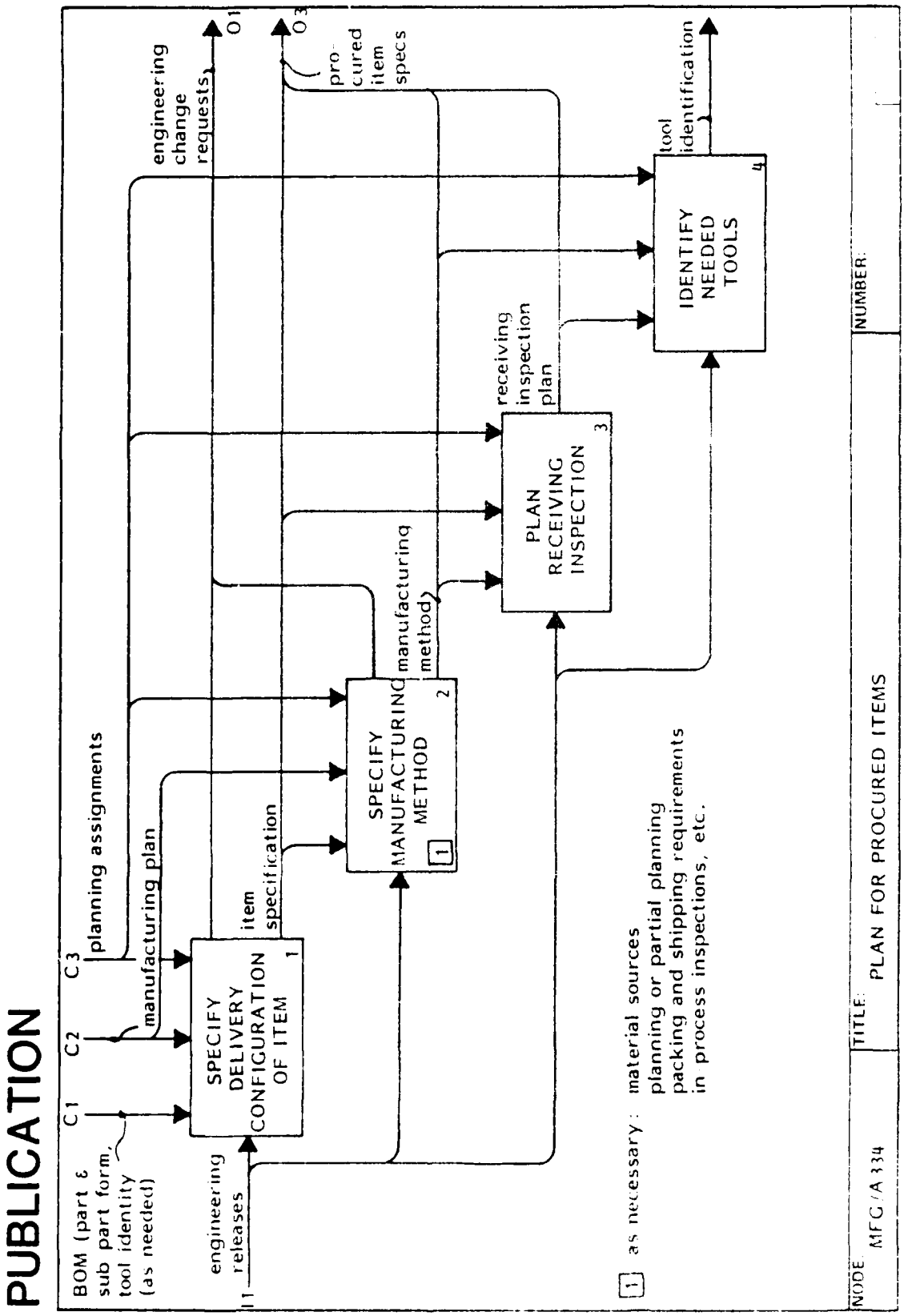
PUBLICATION
BOM (part & sub part form, tool identity (as needed)
C1
C2
C3
planning assignments
manufacturing plan
engineering releases
I1
SPECIFY DELIVERY CONFIGURATION OF ITEM
1
item specification
SPECIFY MANUFACTURING METHOD
2
manufacturing method
PLAN RECEIVING INSPECTION
3
receiving inspection plan
IDENTIFY NEEDED TOOLS
4
tool identification
engineering change requests
O1
O3
procured item specs
1 as necessary: material sources
planning or partial planning
packing and shipping requirements
in process inspections, etc.
NODE
MFG/A 334
TITLE:
PLAN FOR PROCURED ITEMS
NUMBER:

A4 Provide Production Resources

Production resources come in four major categories: facilities, equipment, tools, and people. The primary controls for all of them are the resource plans (C3 - from the manufacturing plan) which specify what they are to be and the methods for getting them; and the schedules (C2) which specify when they are required. In the case of tools (Box 3), detailed tool specifications (from production planning - A3) are needed in addition to the tool plans.

Interaction between these activities is fairly limited. Facilities place limitations on the space, power, and other support available for equipment, while the equipment imposes needs for these on the facilities. Since most tools are used in conjunction with equipment, the interface requirements of the equipment must be known in order to design or procure the tools (Box 3).

Purchase requisitions (O3) ultimately result in the procurred items (I1) from which the resources are made. Resource characteristics (O1) are provided to production planning

PUBLICATION

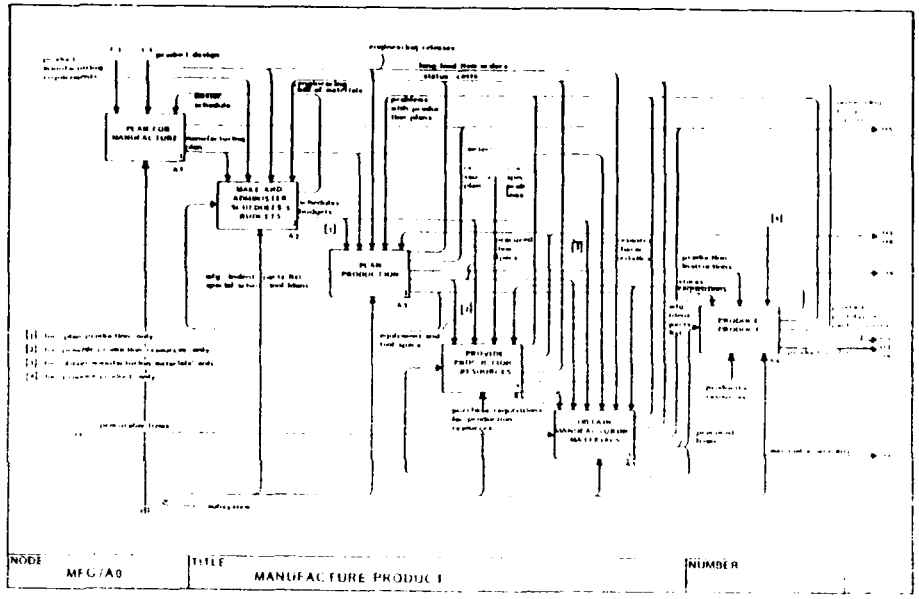

so that plans can conform to the available (or planned) resources.

Tools and people are supplied to production in response to the requisitions for them (C4).

Glossary

Resources - Include facilities, equipment, tools and people.

Facilities - Include building, power, water, lighting, hoists, etc.

Equipment - Machines which operate on materials to form parts or assemblies. In particular, the items called "machine tools" are equipment. For example, lathes, drills, presses, etc.

Tools - Items to be used in

PUBLICATION

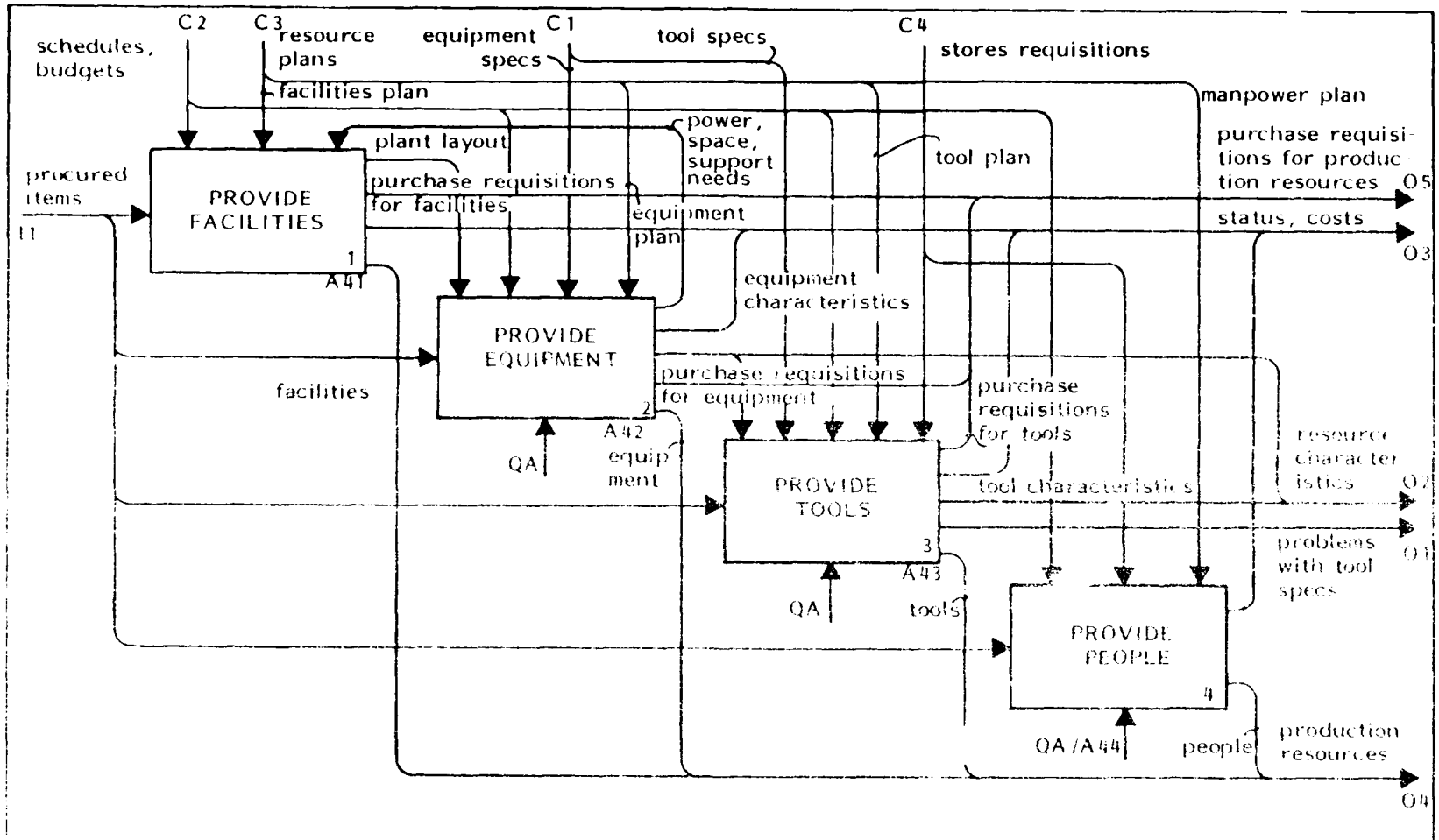

Note See also QA/A52

NODE	TITLE	NUMBER
MFG A4	PROVIDE PRODUCTION RESOURCES	

A4 Glossary (con't)

connection with equipment or by hand in making the product. Includes expendible tools, cutters and formers, holding tools, jigs and fixtures, measuring tools, gauges, NC tapes, etc.

People - Individuals capable of doing some production task(s).

Procured Item - Any item which is obtained from the outside and used in making facilities, equipment or tools. (It includes people who are hired).

Resource Plans - Those overall coordinating plans made at the whole product level for facilities equipment, tools, or manpower.

Purchase Requisitions - Requests that items be procured to be used to make resources.

Requisitions - Requests to provide resources (particularly tools or people).

Resource Characteristic - Descriptions of information about the capabilities of the resources (particularly for tools and equipment).

Tools Specification - Those necessary capabilities as well as precise dimensions of a tool.

A41 Provide Facilities

Provide facilities encompasses planning, building, modifying, operating and maintaining facilities within the prescribed budgets to house the work identified.

The facility plan (C2) and the schedule, work orders and tracking information (C1) act as controls in that they identify facility requirements and schedules.

Glossary

Detailed Facility Specifications - Definition of structures required to support the identified work.

Completed Facilities - The completed construction and acceptance of the facility to support the identified work.

Existing Facility Specifications - A description of the total facility resource currently available to the company.

PUBLICATION

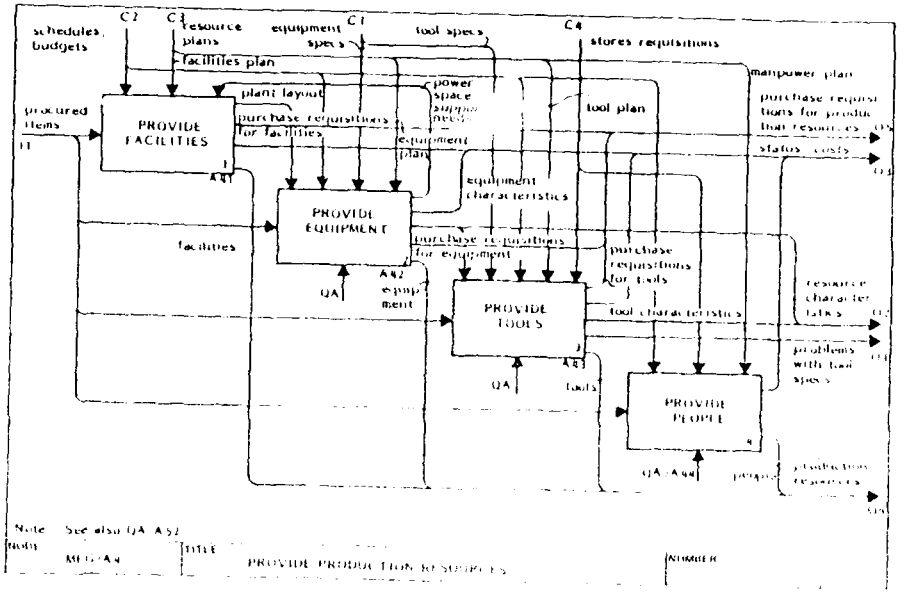

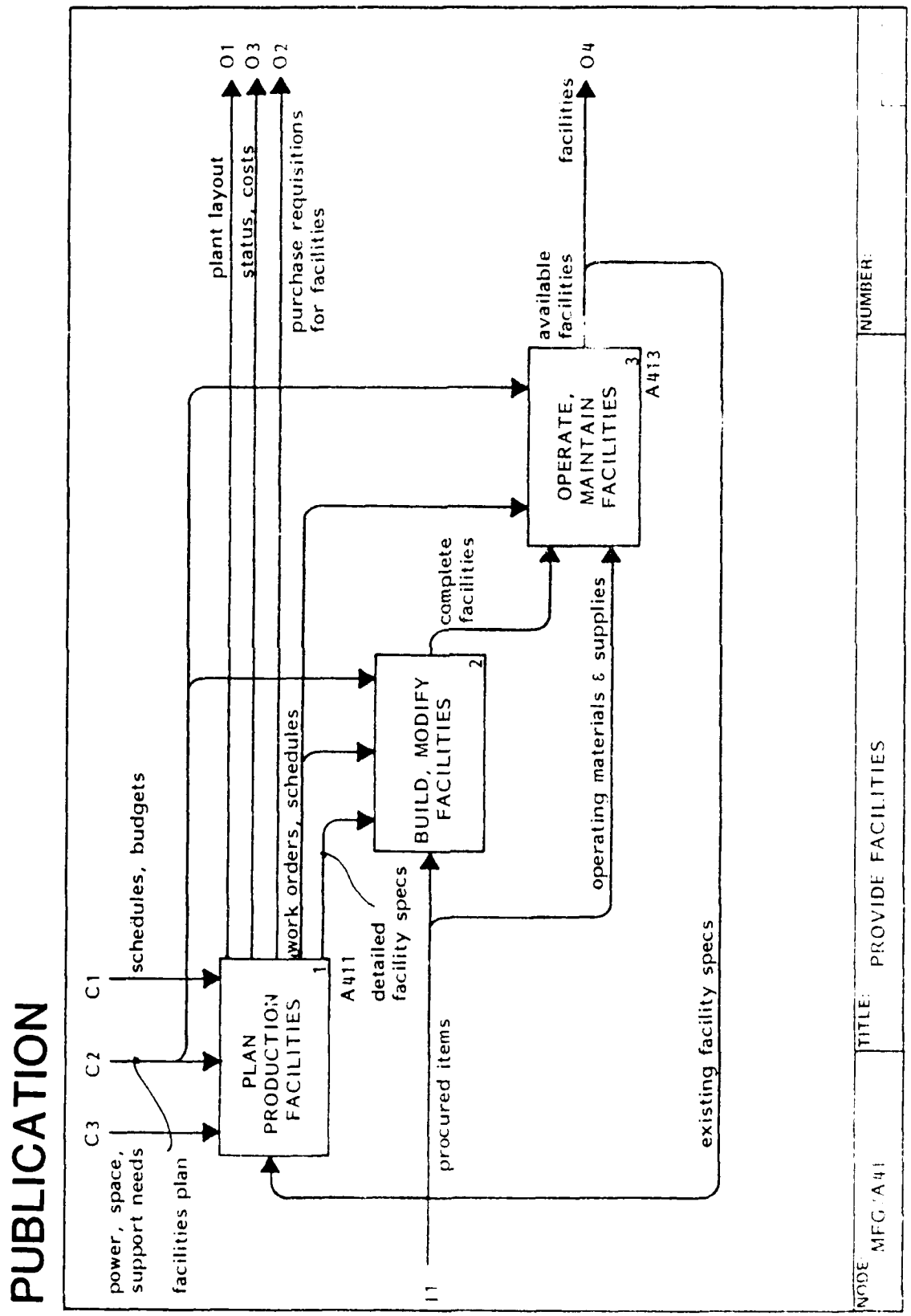
PUBLICATION
C1
C2
C3
power, space, support needs
facilities plan
schedules, budgets
PLAN PRODUCTION FACILITIES
1
A411
work orders, schedules
detailed facility specs
plant layout
status, costs
purchase requisitions for facilities
O1
O3
O2
I1
procured items
BUILD, MODIFY FACILITIES
2
complete facilities
operating materials & supplies
existing facility specs
OPERATE, MAINTAIN FACILITIES
3
A413
available facilities
facilities
O4
NODE
MFG A41
TITLE
PROVIDE FACILITIES
NUMBER

A411 Plan Production Facilities

The planning function is the analysis, coordination, and engineering design of the facility to accomplish the assigned work.

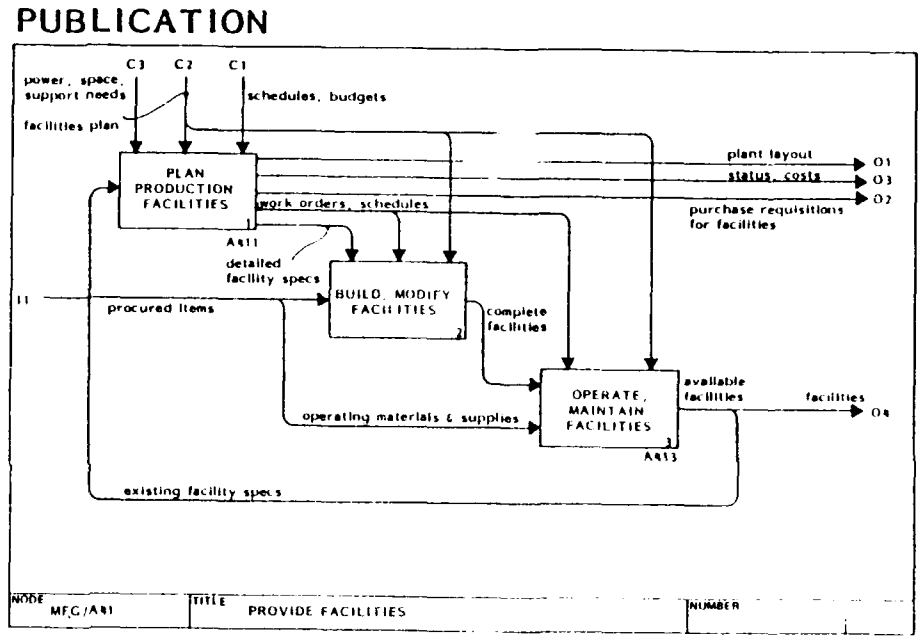

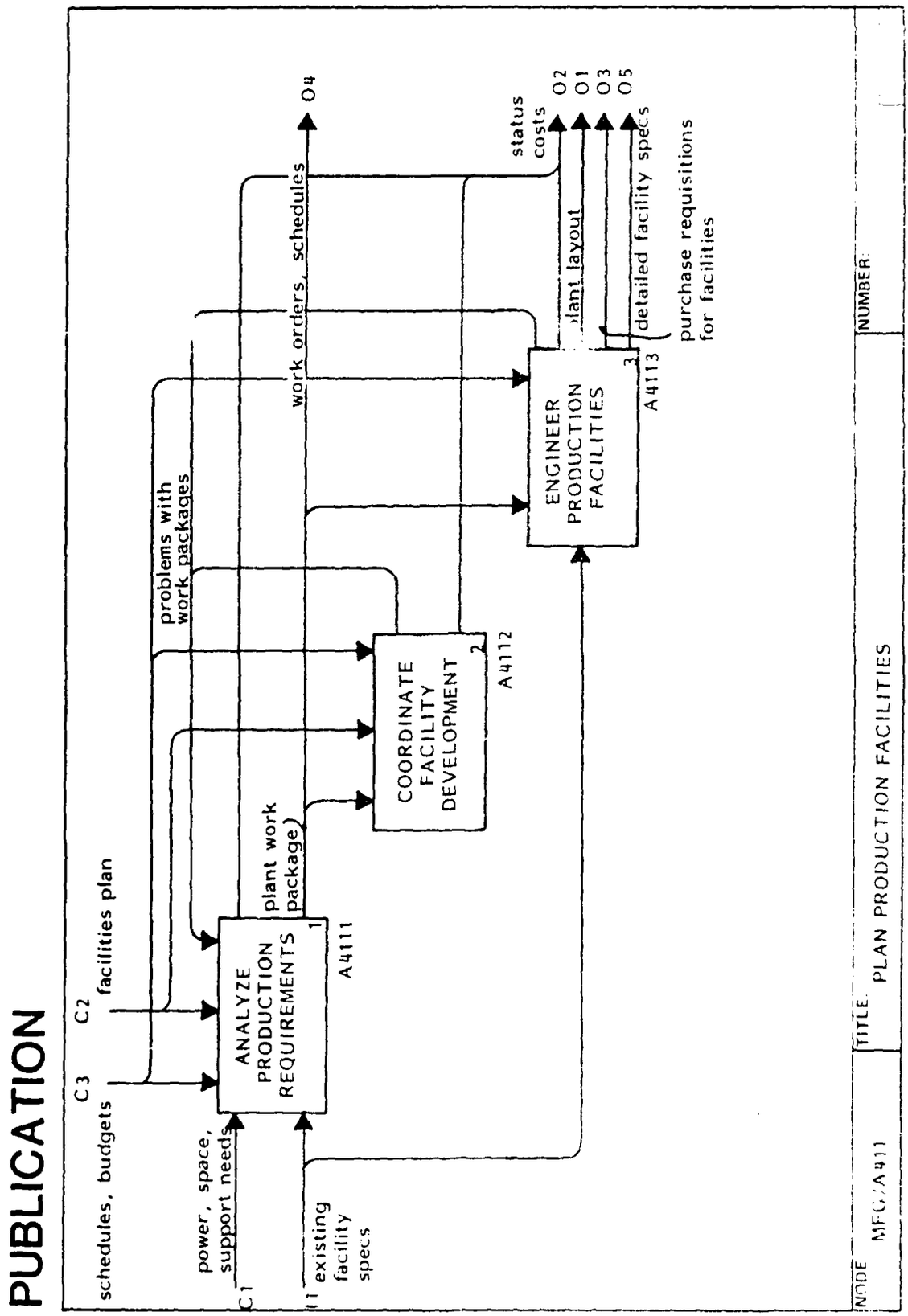
PUBLICATION
C3
schedules, budgets
C2
facilities plan
C1
power, space, support needs
I1
existing facility specs
ANALYZE PRODUCTION REQUIREMENTS
1
A4111
plant work package
problems with work packages
COORDINATE FACILITY DEVELOPMENT
2
A4112
work orders, schedules
O4
ENGINEER PRODUCTION FACILITIES
3
A4113
status
costs
O2
O1
O3
O5
plant layout
detailed facility specs
purchase requisitions for facilities
NODE
MFG/A411
TITLE
PLAN PRODUCTION FACILITIES
NUMBER

A4111 Analyze Production Requirements

This function is the detailed analysis of the proposed work flows and support requirements in comparison to existing facilities to define the preliminary shape of the facility. Construction cost estimates are developed.

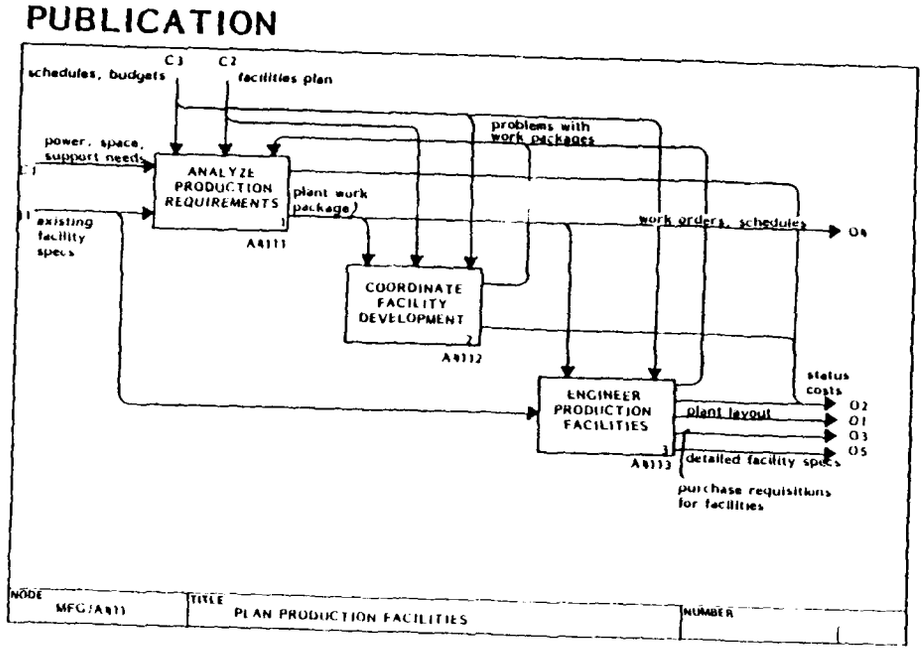

PUBLICATION

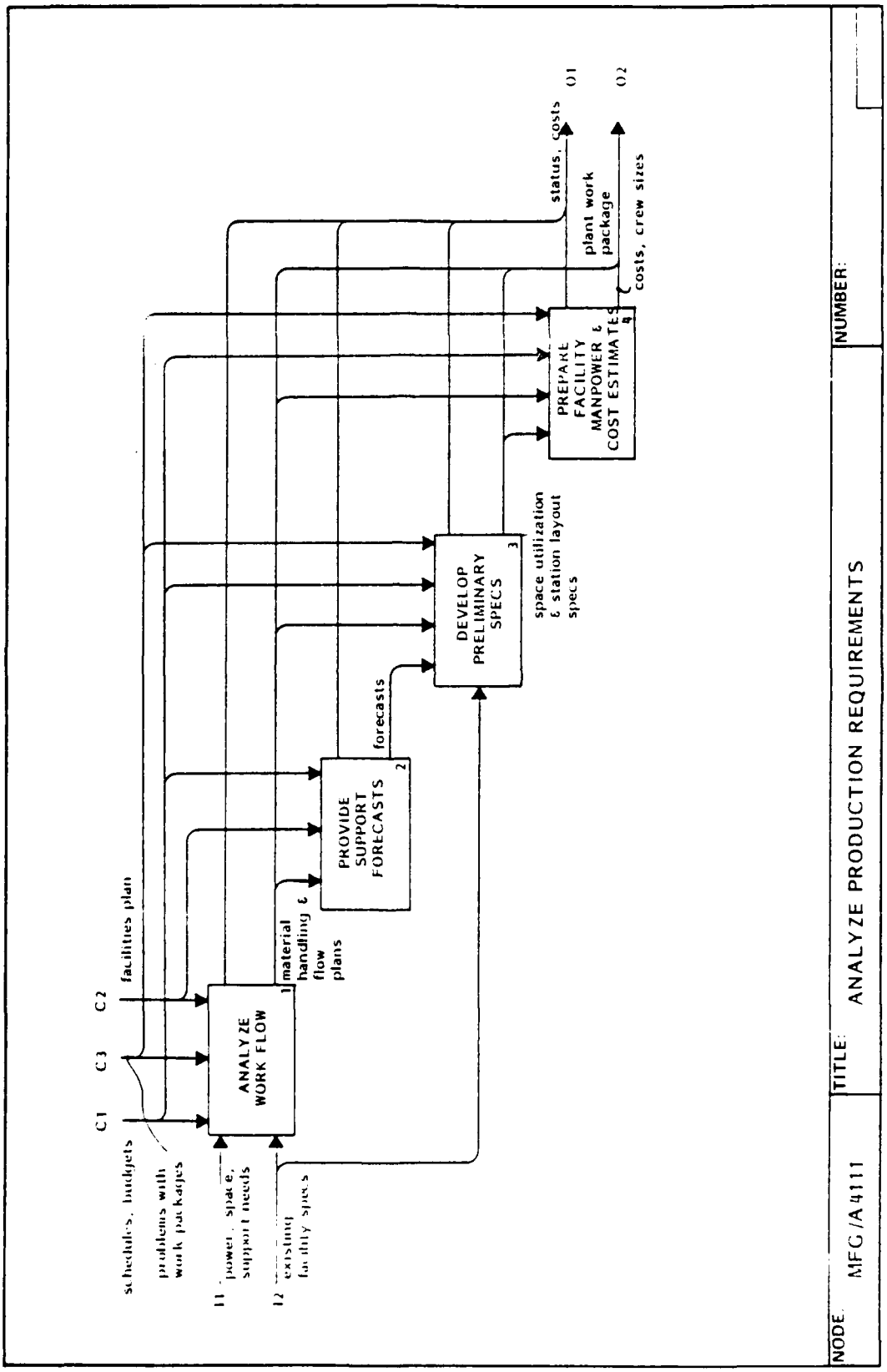

A4112 Coordinate Facility Development

This coordination function justifies and obtains approval for the new facility design (Box 1). It then obtains bids and lets contracts (Box 2), then handles the interface with the design and support groups (Box 3).

PUBLICATION

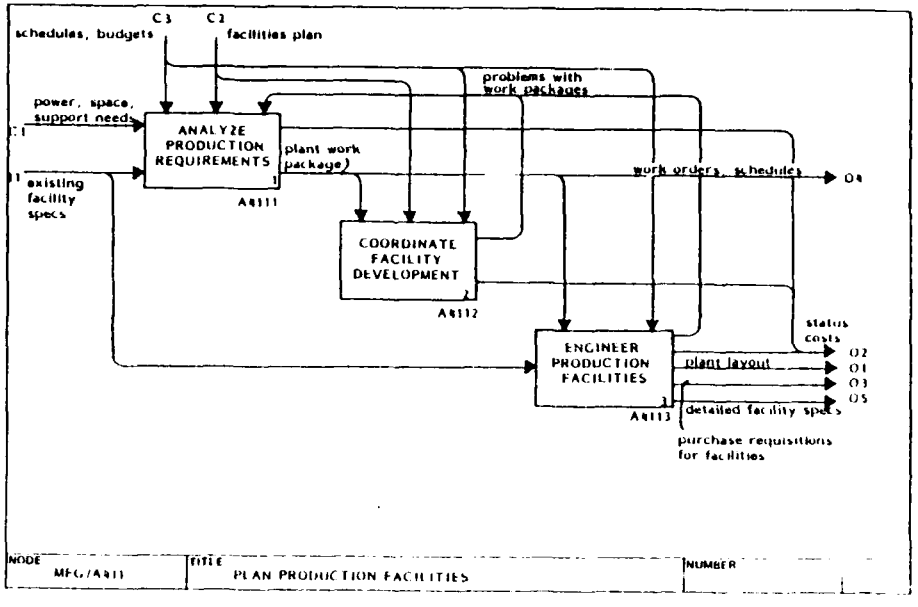

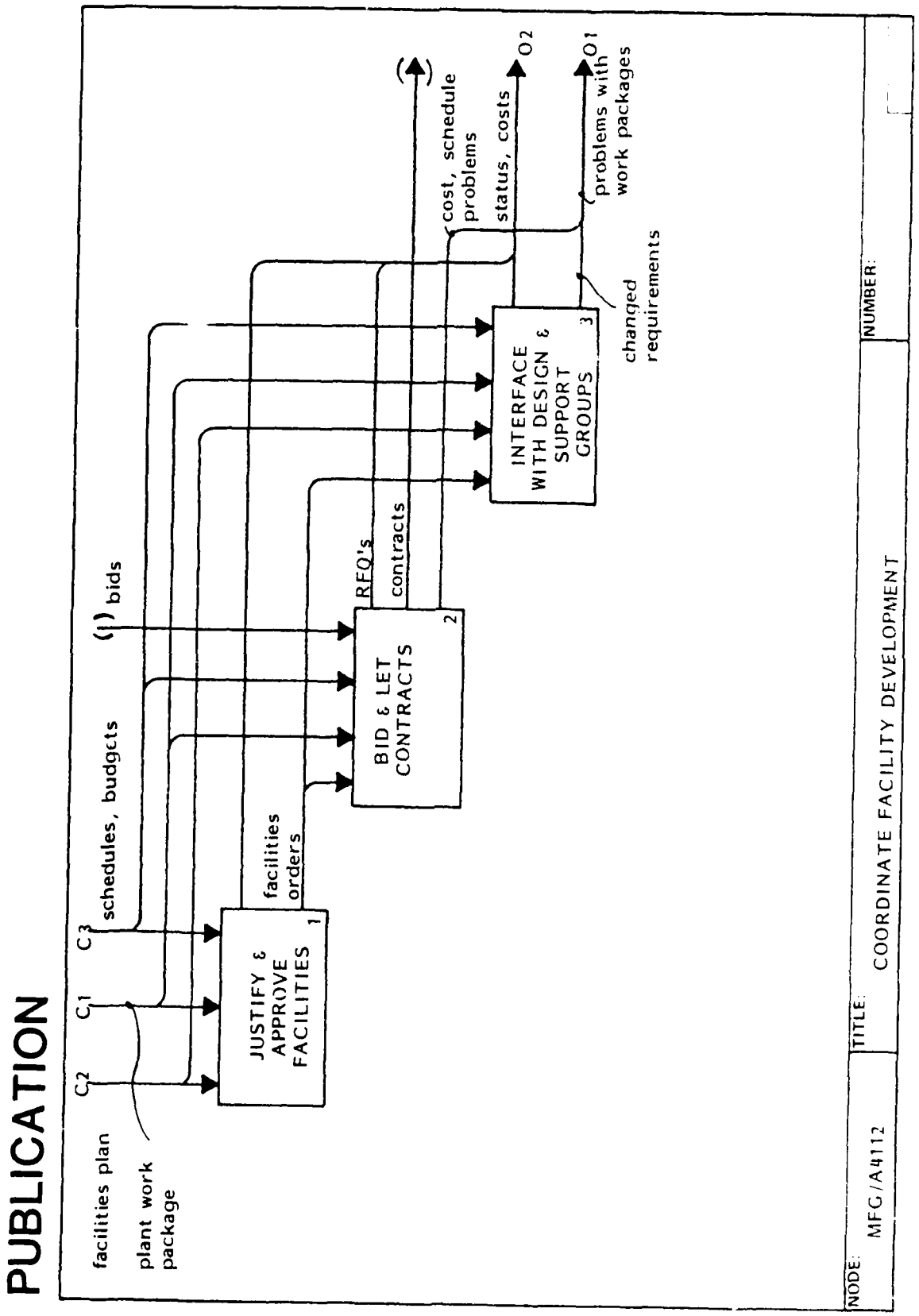
PUBLICATION
facilities plan
plant work package
C2
C1
C3
schedules, budgets
(I) bids
JUSTIFY & APPROVE FACILITIES
1
facilities orders
BID & LET CONTRACTS
2
RFQ's
contracts
INTERFACE WITH DESIGN & SUPPORT GROUPS
3
changed requirements
(I)
cost, schedule problems
status, costs
O2
problems with work packages
O1
NODE:
MFG/A4112
TITLE:
COORDINATE FACILITY DEVELOPMENT
NUMBER:

A4113 Engineer Production Facilities

This facilities function is the design function that provides the construction drawings and machinery requirements (Box 1) which also include layouts and Bills of Materials (Box 2) for the plant. These BOMs are turned into material requisitions that are used to order materials and equipment.

PUBLICATION

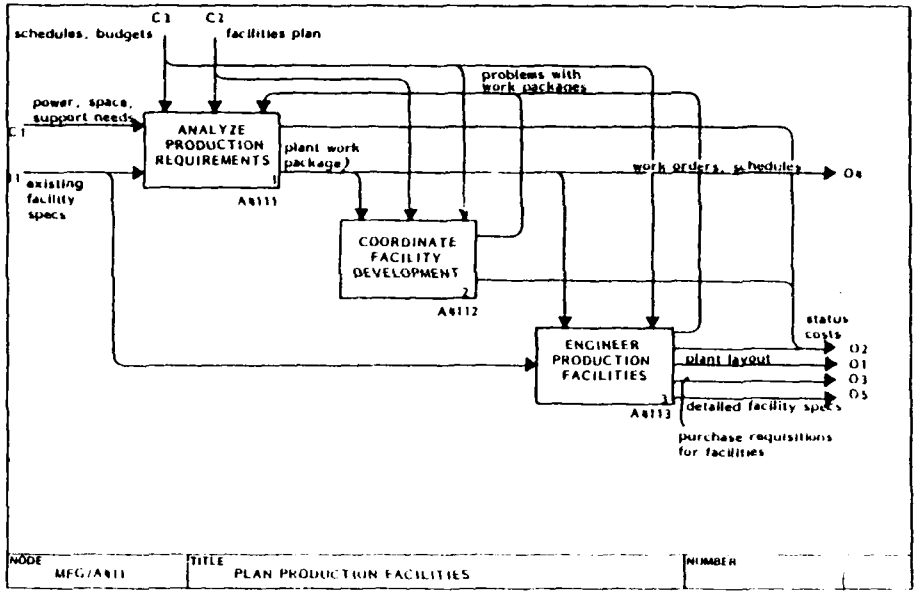

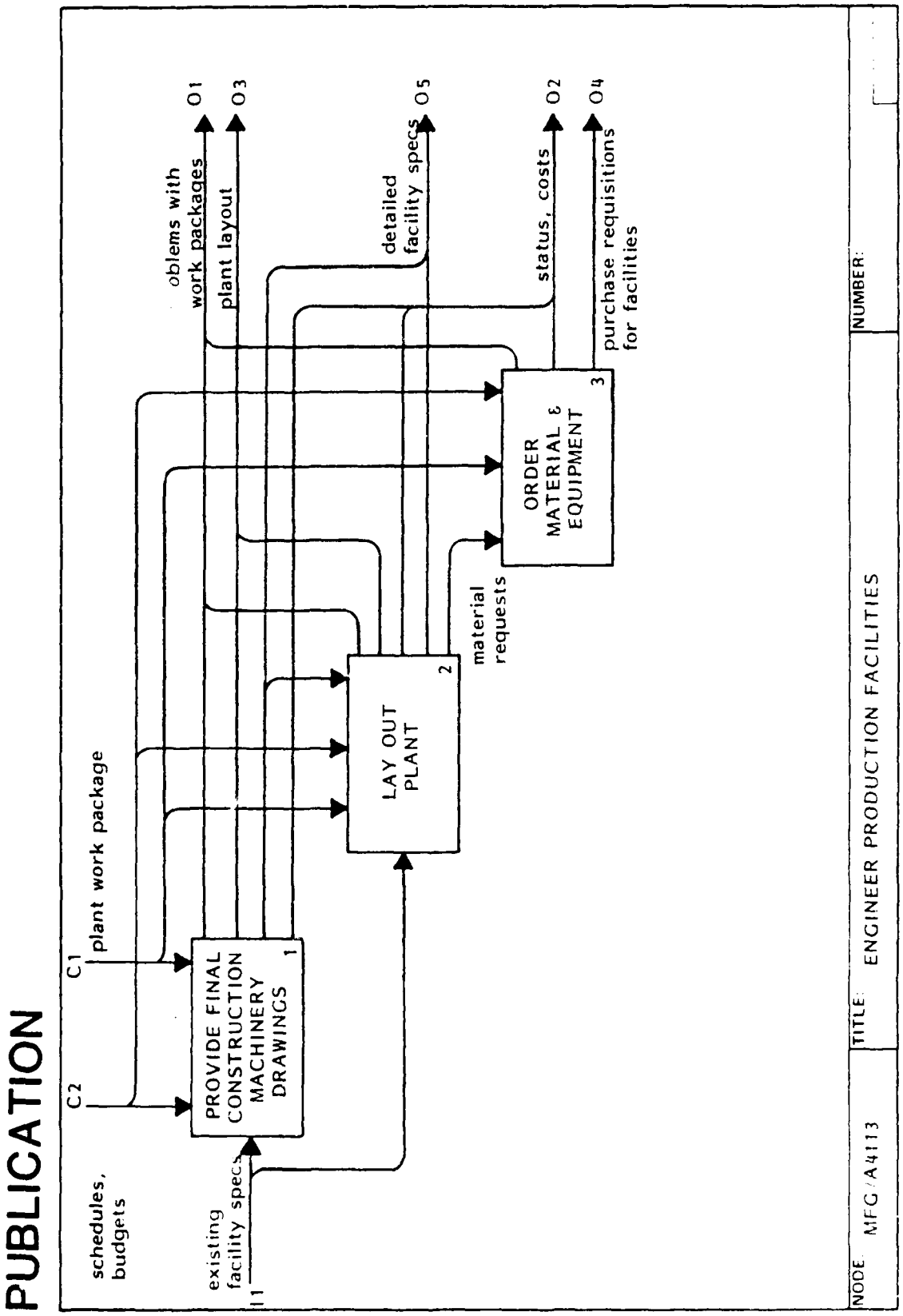
PUBLICATION
schedules, budgets
C2
C1
plant work package
existing facility specs
I1
PROVIDE FINAL CONSTRUCTION MACHINERY DRAWINGS
1
LAY OUT PLANT
2
ORDER MATERIAL & EQUIPMENT
3
oblems with work packages
O1
plant layout
O3
detailed facility specs
O5
status, costs
O2
purchase requisitions for facilities
O4
material requests
NODE
MFG/A4113
TITLE
ENGINEER PRODUCTION FACILITIES
NUMBER

A413 Operate, Maintain Facilities

This function provides the facilities maintenance and support. Plant maintenance (Box 1) includes painting, gardening, plumbing upkeep, and heating, ventilation and air conditioning (HVAC) operation. Monitoring of utilities (Box 2) includes water, power, and telephone service. Janitor services (Box 3) are the responsibility of this function. Waste handling (Box 4) includes the responsibility for complying with OSHA and EPA directives for personnel safety and disposal of liquid and solid wastes that are by-products of the manufacturing process.

PUBLICATION

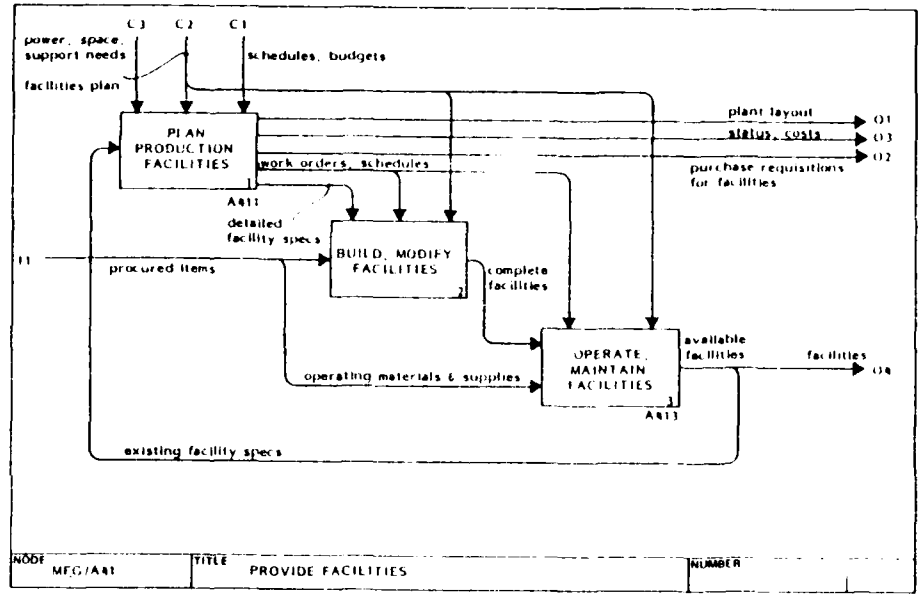

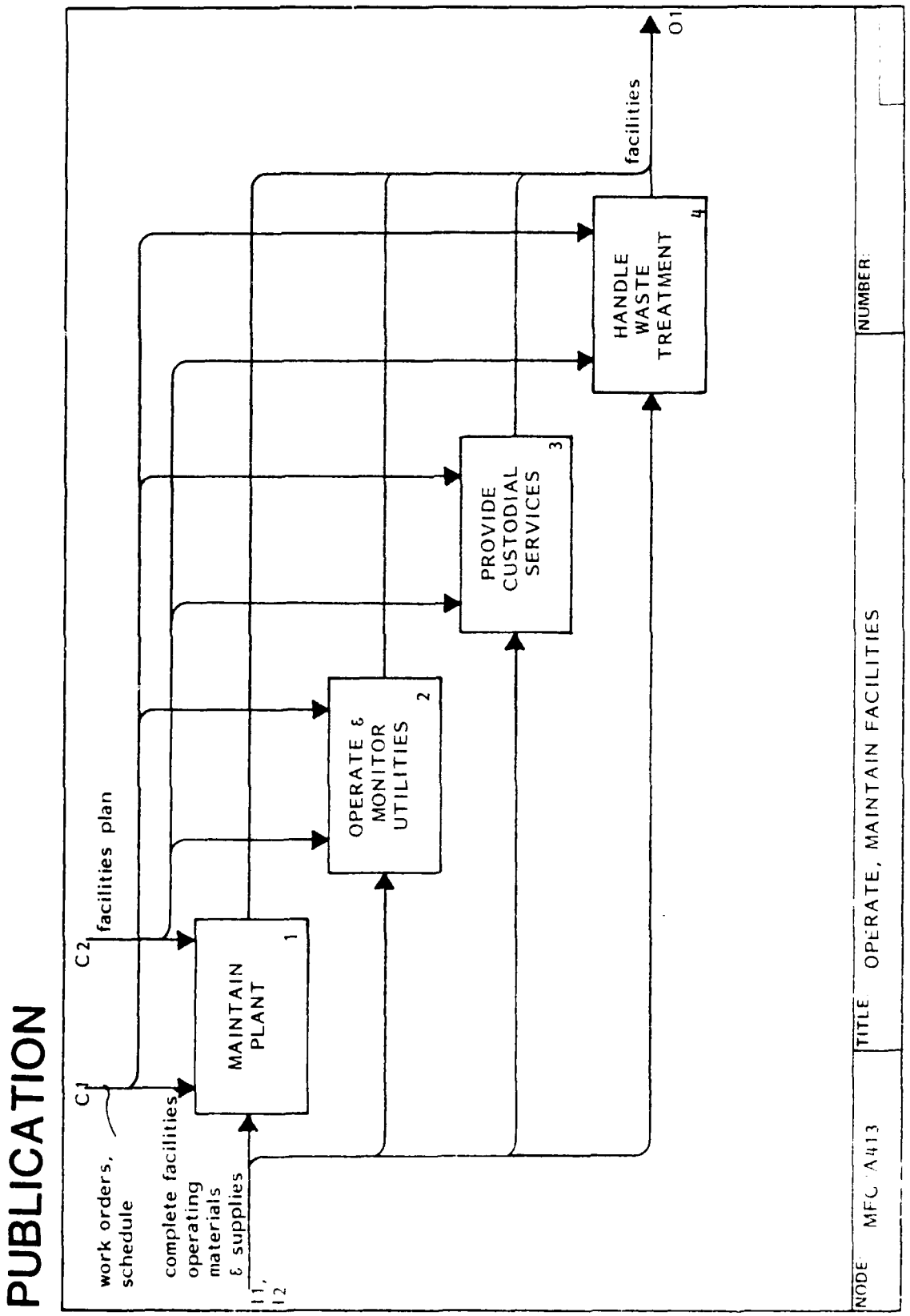
PUBLICATION
work orders, schedule
C1
complete facilities operating materials & supplies
I1, I2
C2
facilities plan
MAINTAIN PLANT
1
OPERATE & MONITOR UTILITIES
2
PROVIDE CUSTODIAL SERVICES
3
HANDLE WASTE TREATMENT
4
facilities
O1
NODE
MFC A413
TITLE
OPERATE, MAINTAIN FACILITIES
NUMBER

A42 Provide Equipment

This function develops equipment plans (Box 1), issues material requisitions (Box 2), and, after installation, controls (Box 3) and maintains the equipment (Box 4).

PUBLICATION

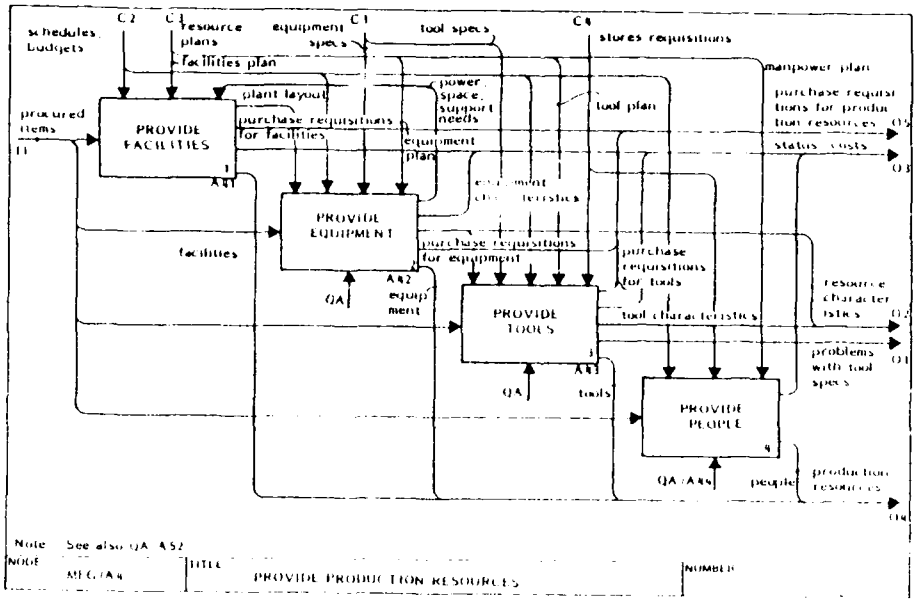

PUBLICATION

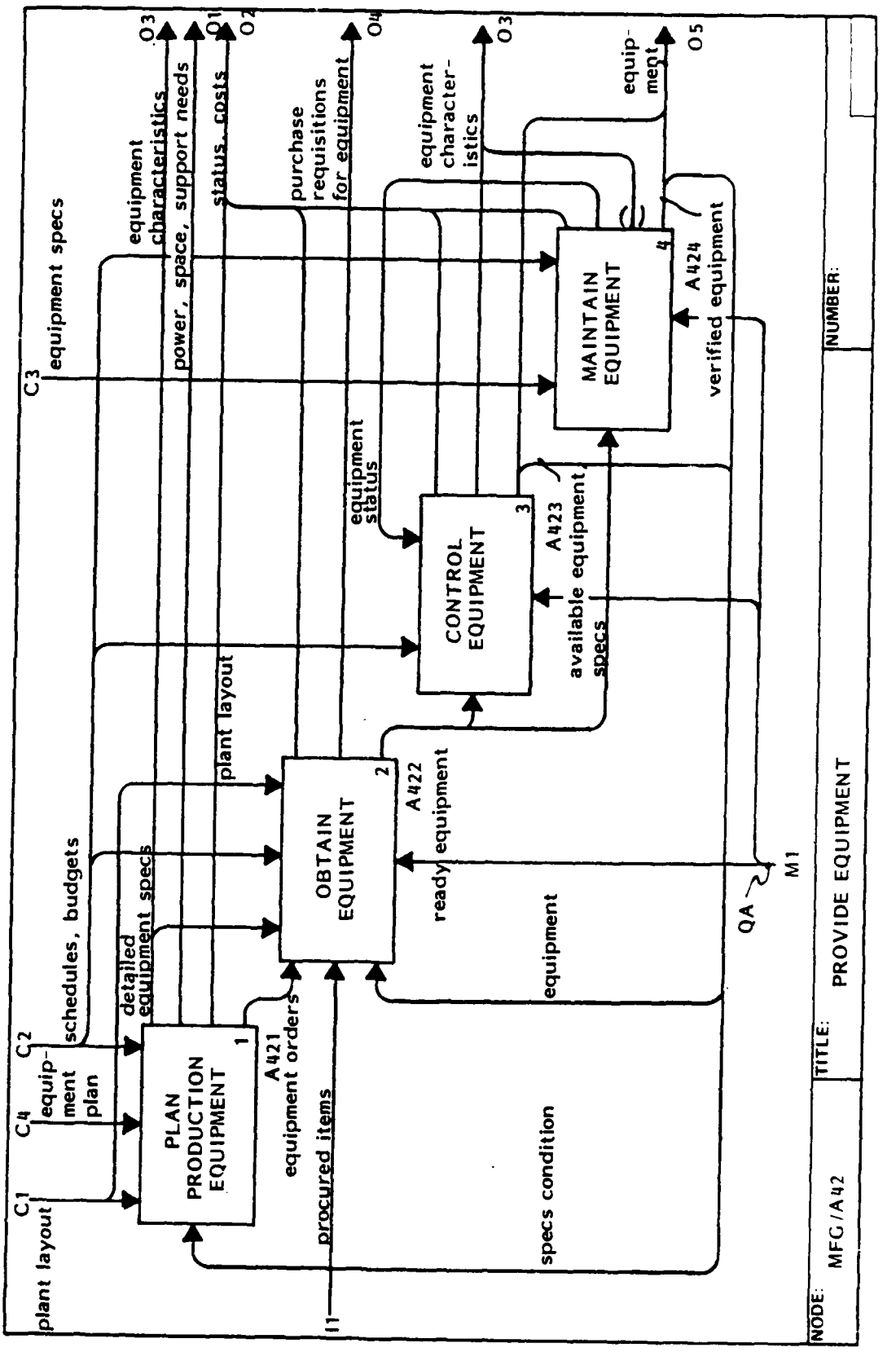

A421 Plan Production Equipment

This function establishes equipment requirements from an analysis of the planned production loading (Box 1, Box 2). Box 3 could be done at the start of the program or later in the program. It reviews the inventory of current equipment for usability and availability (Box 3) and if required does make/buy trade-offs (Box 4) and estimates costs (Box 5). It then justifies the costs and obtains the proper approvals.

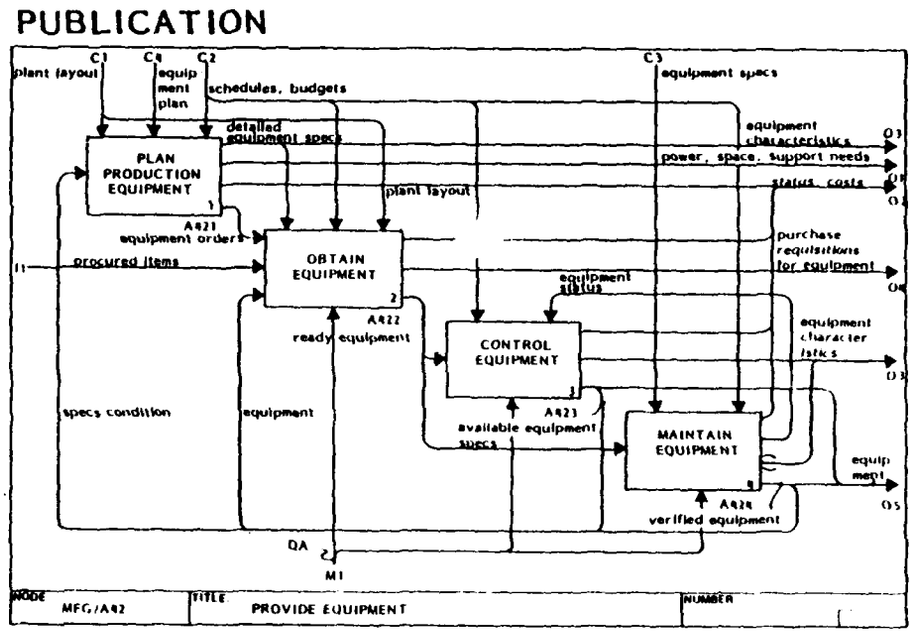

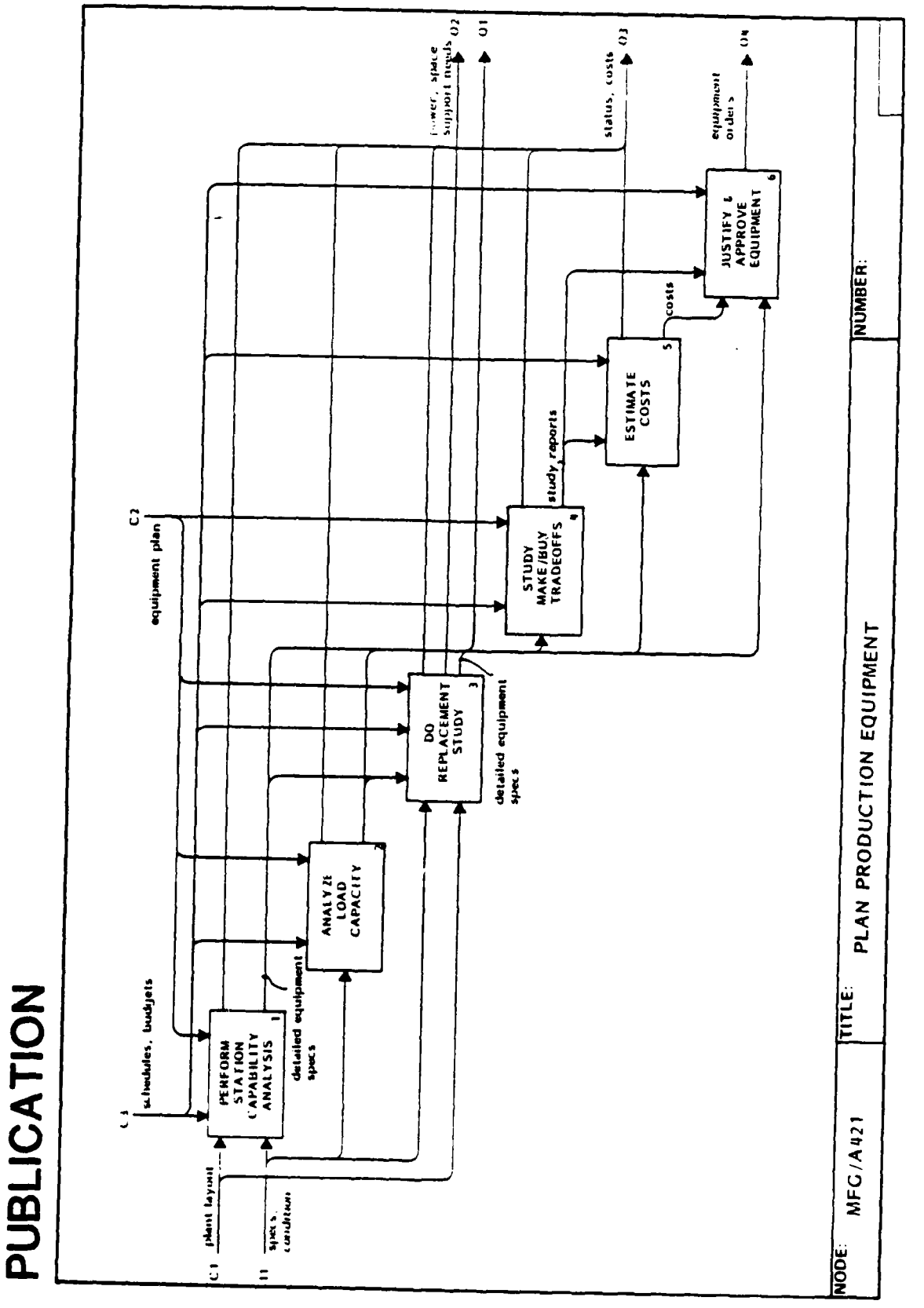
PUBLICATION
C1
plant layout
I1
specs, conditions
C3
schedules, budgets
C2
equipment plan
PERFORM STATION CAPABILITY ANALYSIS
1
detailed equipment specs
ANALYZE LOAD CAPACITY
2
DO REPLACEMENT STUDY
3
detailed equipment specs
STUDY MAKE/BUY TRADEOFFS
4
study reports
ESTIMATE COSTS
5
costs
JUSTIFY & APPROVE EQUIPMENT
6
power, space support needs
O2
O1
status, costs
O3
equipment orders
O4
NODE:
MFG/A421
TITLE:
PLAN PRODUCTION EQUIPMENT
NUMBER:

A422 Obtain Equipment

Those equipment orders associated with items that ought to be purchased are handled within Box 1. Box 1 issues purchase requisitions in compliance with the detailed equipment specifications. For those equipment orders dealing with items to be made, Box 2 provides the design specification. Box 3 uses these specifications, togther with the procured items and the available equipment, to perform the actual building or modification of the desired items. These items are then installed, in Box 4, and checked out, Box 5. The status of any tested equipment which is not ready is fed back to Box 3 for further modification.

PUBLICATION

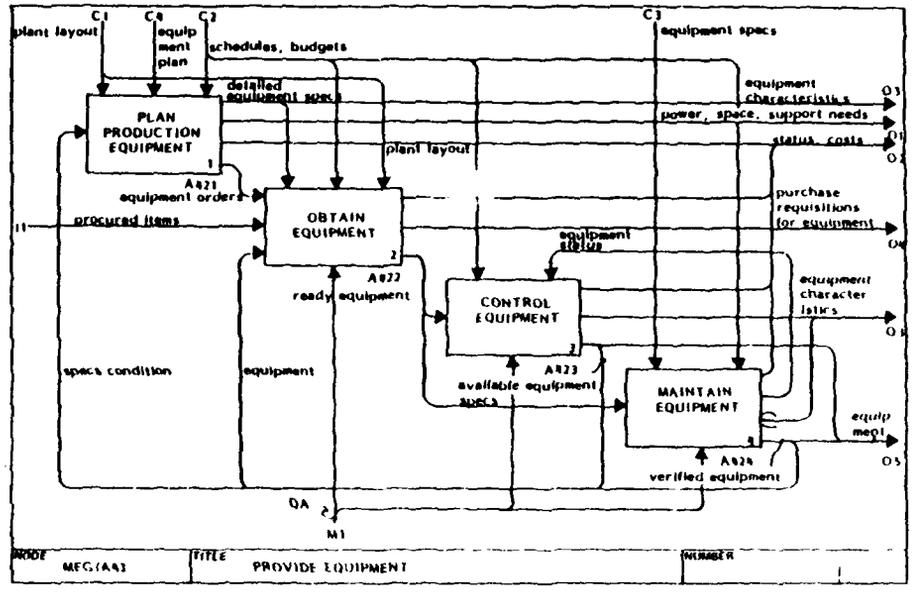

PUBLICATION

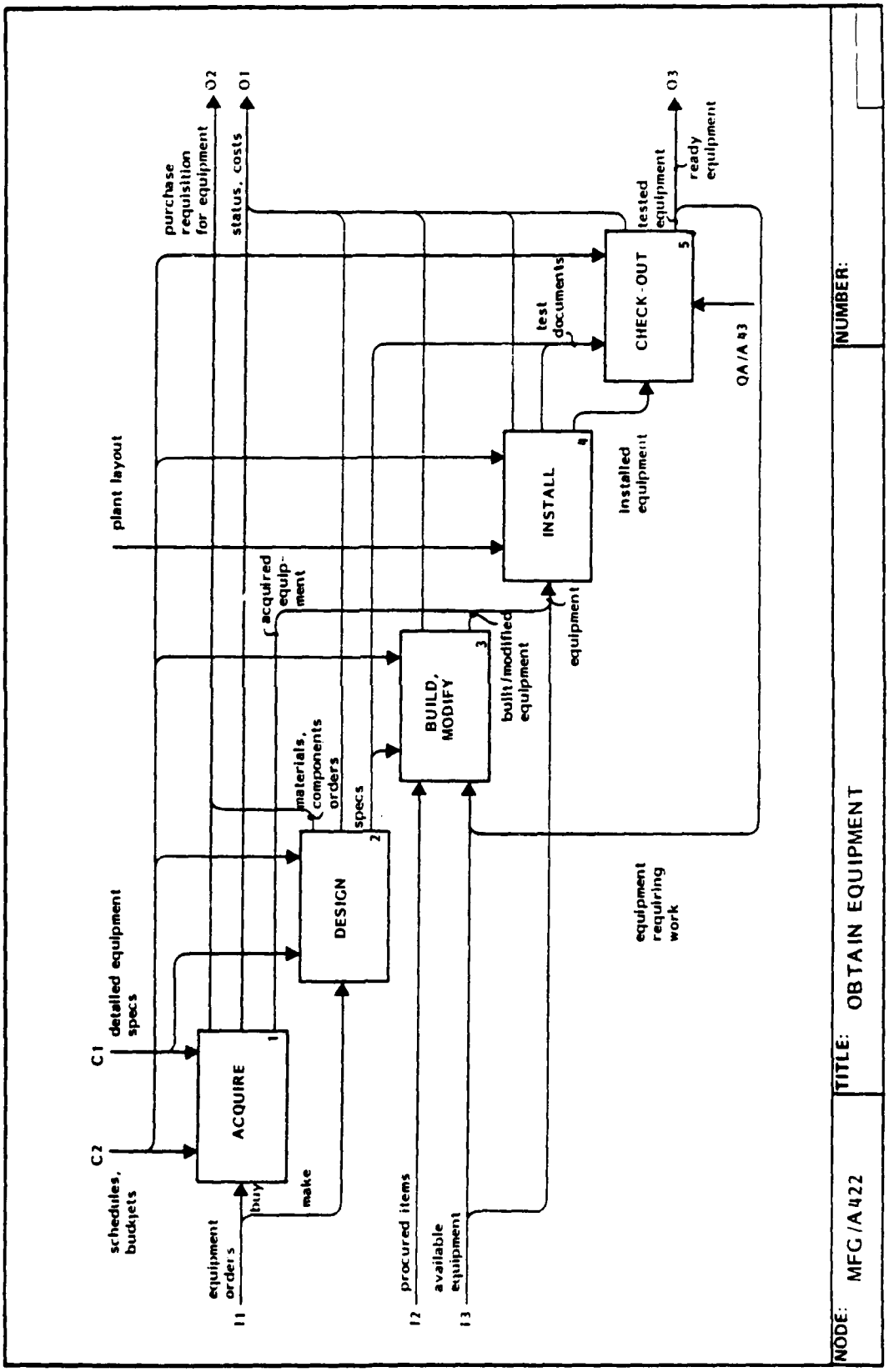

A423 Control Equipment

This function is responsible for control, movement, and accounting of facilities equipment. It moves equipment (Box 2) when required and is responsible for equipment control (Property accounting) (Box 3).

PUBLICATION

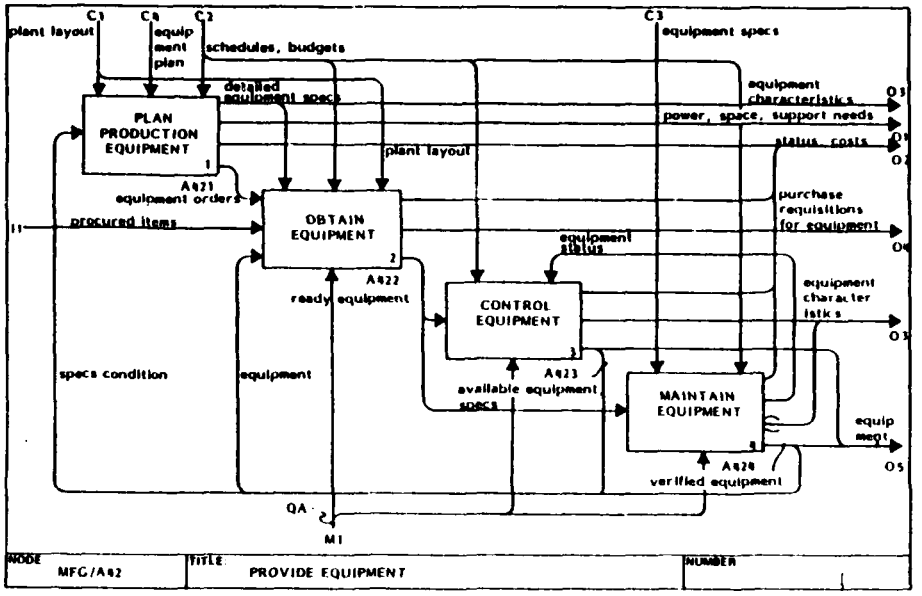

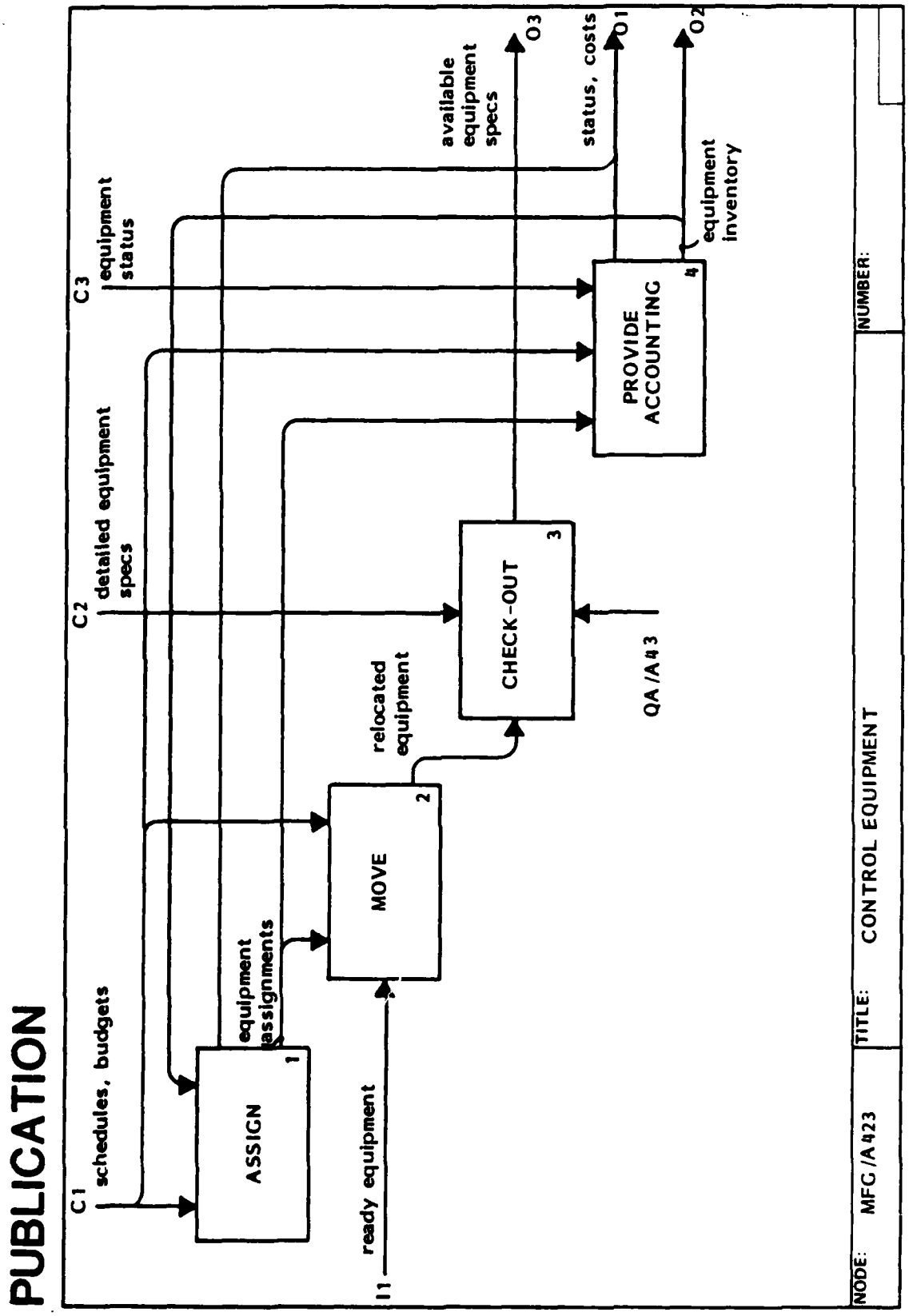
PUBLICATION
C1
schedules, budgets
ASSIGN
1
equipment assignments
MOVE
2
ready equipment
I1
relocated equipment
CHECK-OUT
3
QA/A43
C2
detailed equipment specs
C3
equipment status
PROVIDE ACCOUNTING
4
available equipment specs
O3
status, costs
O1
equipment inventory
O2
NODE:
MFC/A423
TITLE:
CONTROL EQUIPMENT
NUMBER:

A424 Maintain Equipment

This function portrays the activities associated with the maintenance of the equipment. Those activities are both preventive and routine maintenance plus inspection and repair. Appropriate status information is fed back to A423, Control Equipment.

PUBLICATION

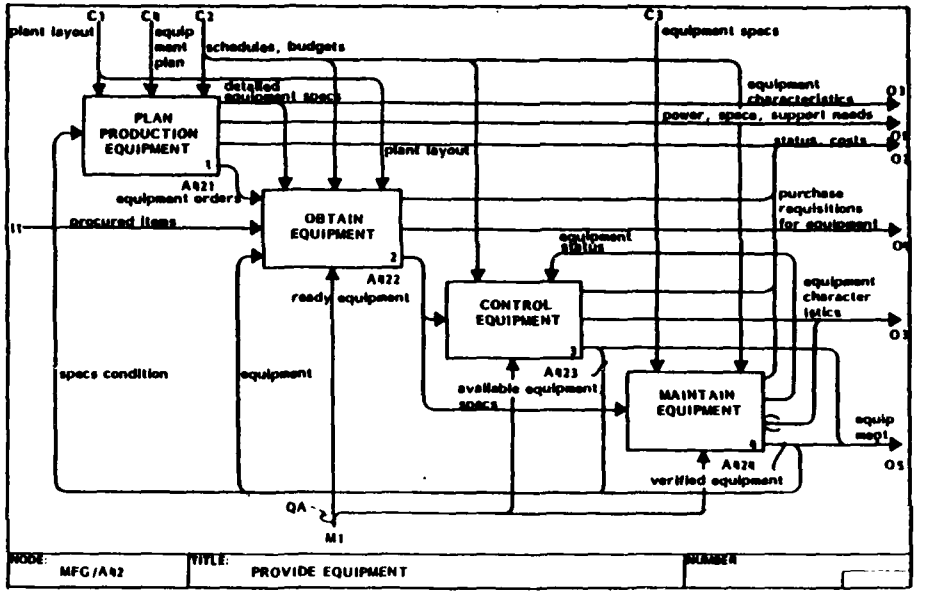

PUBLICATION

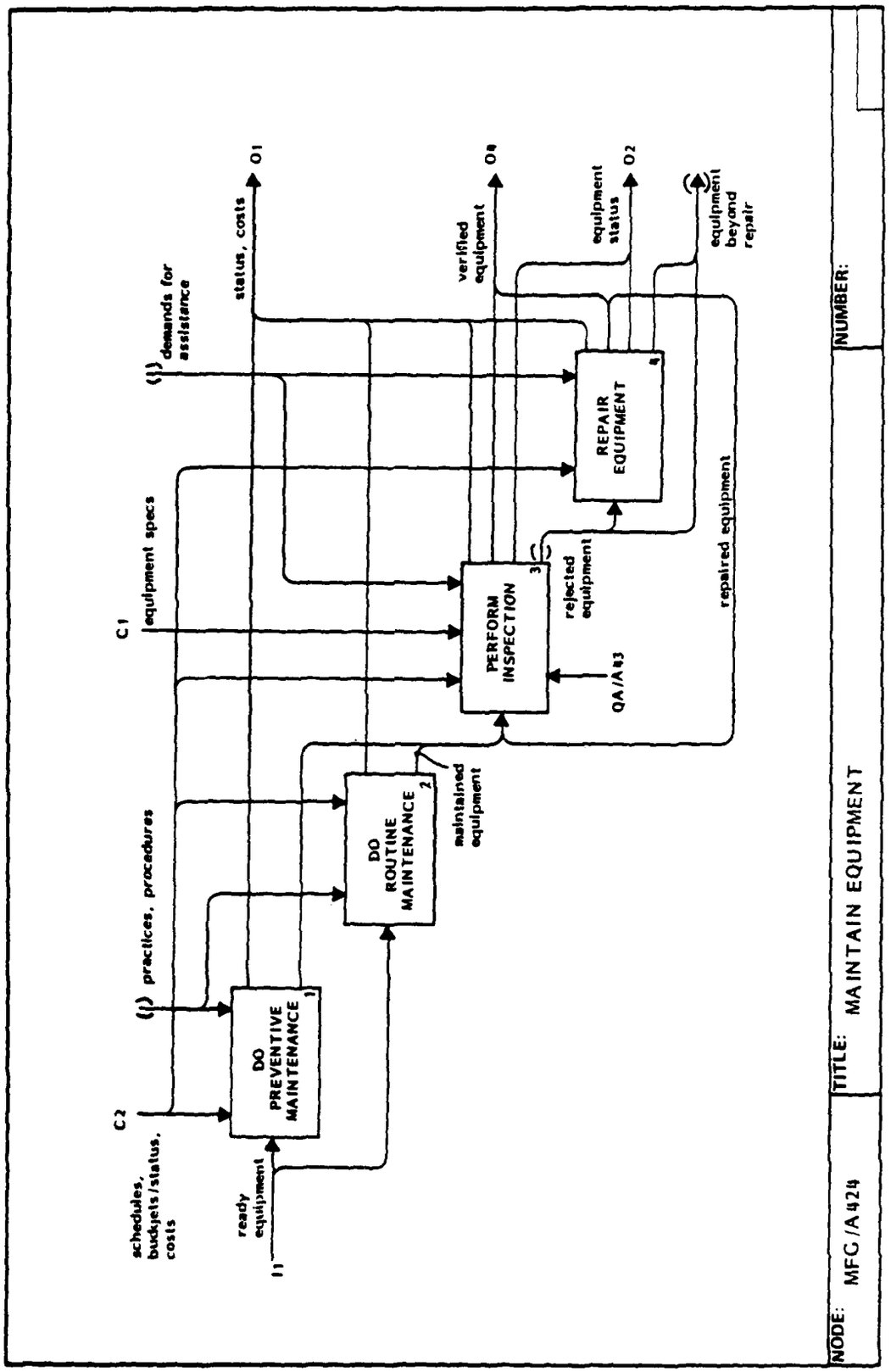

A43 Provide Tools

This function is the process of design, planning, making, and managing of the tools required to support the work to be accomplished. Requirements originate in the Tool Plan (C4) and are used in the design of the tools (Box 2). These designs are then planned (Box 3) which give the manufacturing instructions for making tools (Box 4). Tools are then managed and distributed for use (Box 5).

PUBLICATION

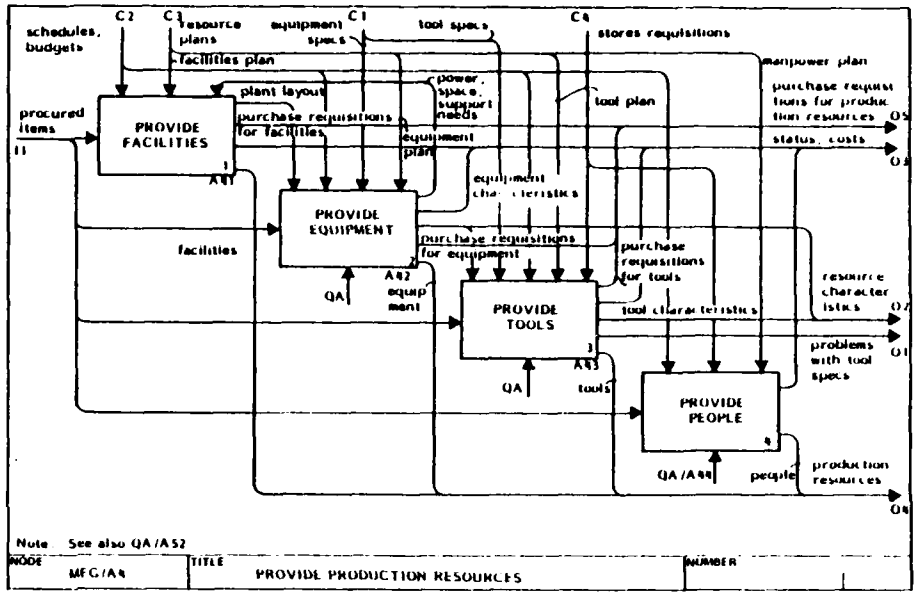

PUBLICATION

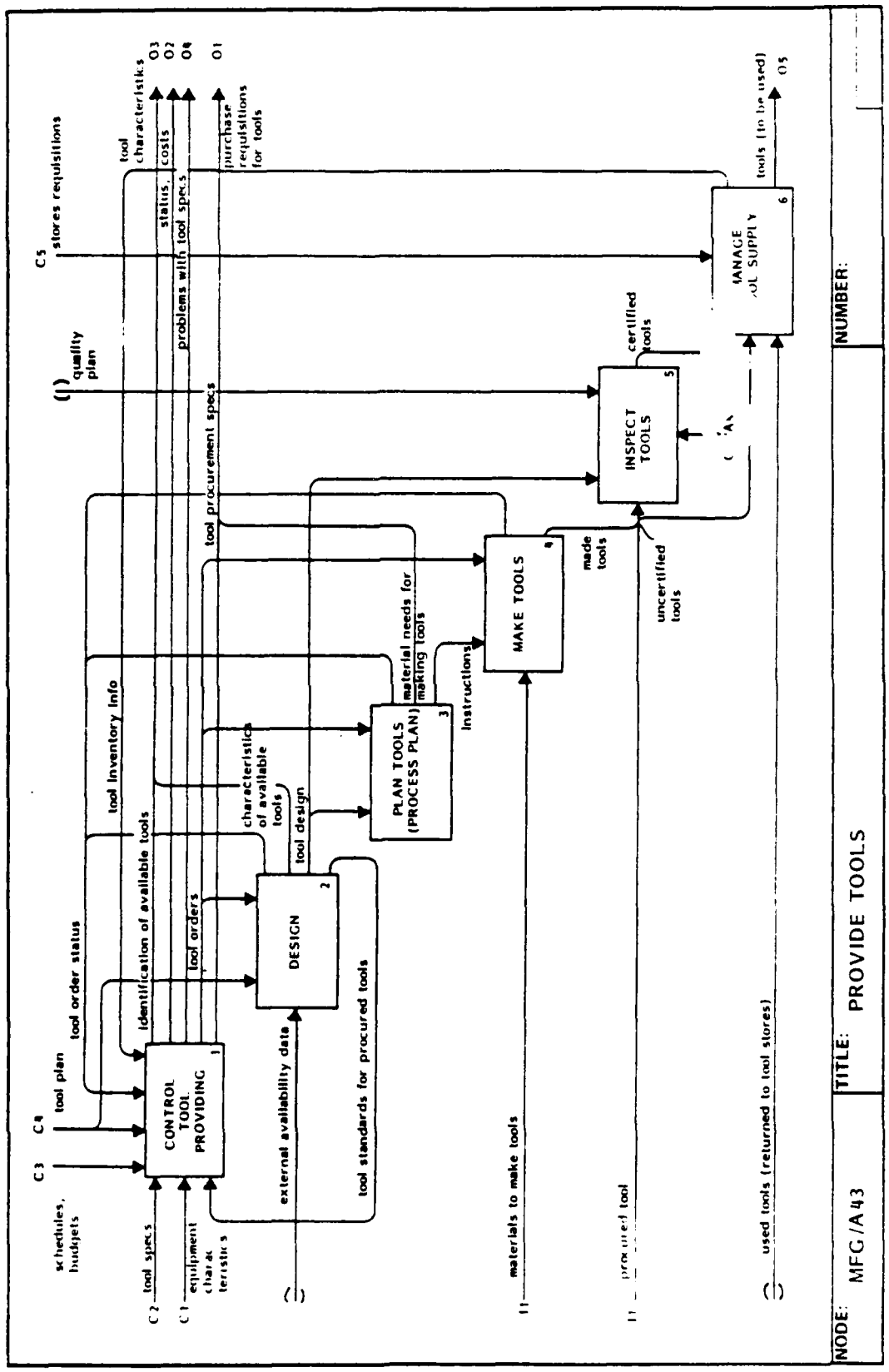

A5 Obtain Manufacturing Materials

Starting with the overall material plan (C4), the materials needs schedule and budget (C3) and the advanced material orders (C5), detailed materials requirements planning (Box 1) can occur. As detailed procured item specs are available (C2), inventory (on hand and on order) can be allocated, and requisitions generated for additional procurements.

Procurement (Box 2) actually obtains the items (I1) from vendors, subcontractors, the customer (GFE, etc.), reporting any problems in availability (to specification or to schedule). Received material is inspected (Box 3) and if accepted, stored until issued (O1) in response to a material requisition (C6).

Material records (inventory, on-order, rejection) are critical in knowing what is or will be available so that all material needs can be met.

In addition, information on material availability information (types and lead times for obtaining as well as what is in inventory) is provided (to engineering) so that

PUBLICATION

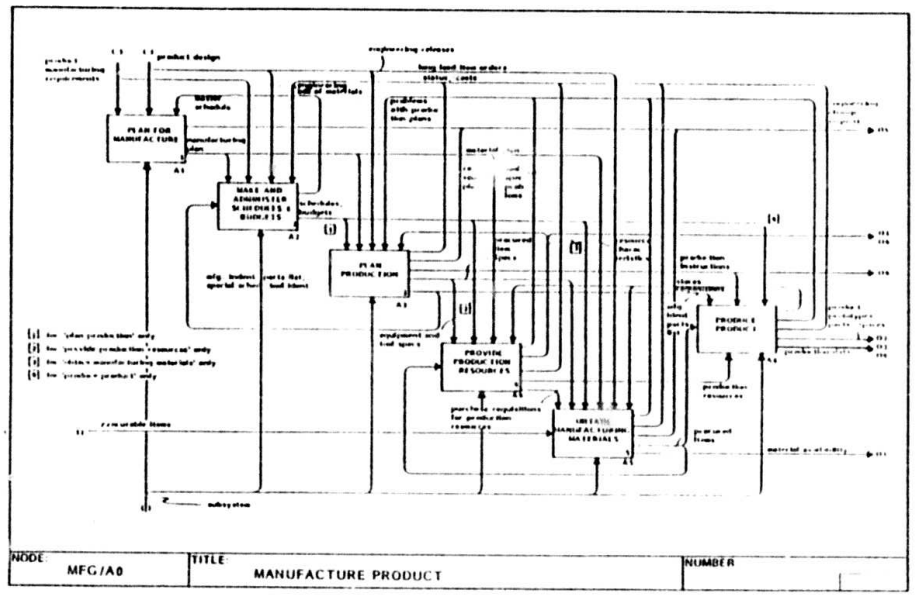

designers can take this into account.

Glossary

(Long Lead) Item Orders - Early orders for procured materials (usually identified by engineering).

Material Plan - Part of a production plan. Specifies how materials will be handled, philosophies, general needs, overview methods of material acquisition, maintenance, supply, etc.

Procured Item Specifications - Detailed specifications of items which are needed to be obtained. Includes inspection procedures.

PUBLICATION

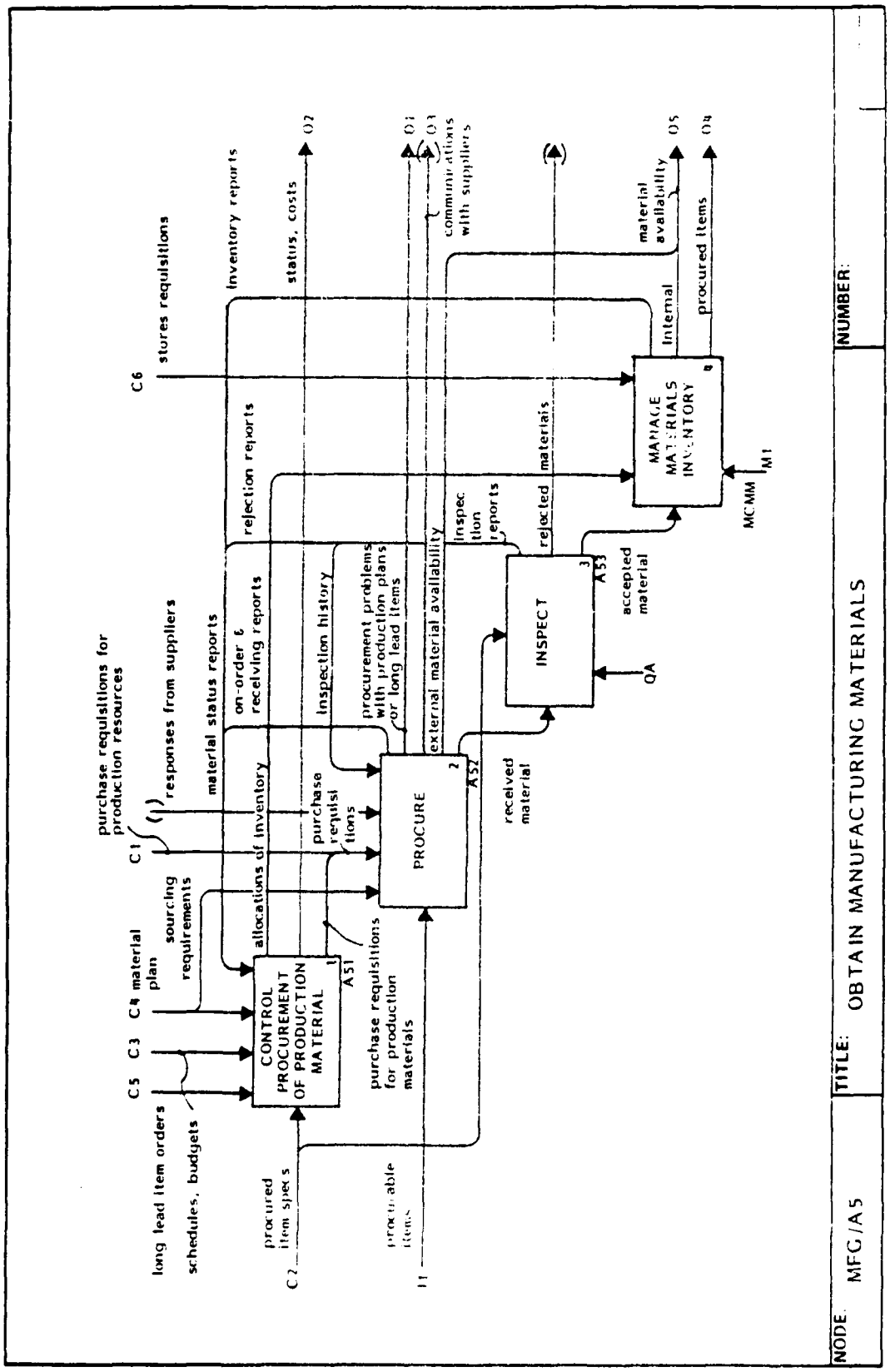

A5 Glossary (con't)

Procurement Control - Includes de-determining total materials needs as derived from the needs for individual items, determining the detailed plans and methods for obtaining the right amounts at the right time.

Materials - Anything which is obtained from outside the plant. This is not just raw materials and supplies, but can include any subassembly or system which is procured.

Procure - Obtain by purchasing, subcontracting, by being furnished by the government or by interdivision transfer.

Purchase Requisitions - Orders to purchasing or to procurement to obtain by whatever method is appropriate.

Communications with Suppliers - Includes RFQ's and Quotes, PO's and acceptances, and inquiries and responses of both technical and contractual nature initiated from either side.

Material Status Reports - The records of all materials. Includes the inventory records, the records of what is on order, the records of what is received and rejection records giving complete status of what is available or is expected to be available on any given date.

Procurement Problems - Any difficulty of obtaining the desired material in the form, quantity, or at the time requested.

Incoming Material - Material delivered to the company (to the receiving dock).

Received Material - Material after it has been recorded as having arrived at the company.

Accepted Material - Material after it has been inspected and deemed appropriate for use.

Procured Items - Items which are on hand in material stores available to be used.

Material Availability Information - The information about what types of materials are available (on hand and procurable) and on what schedules.

Material Requisitions - Requests to obtain material from materials stores.

PUBLICATION

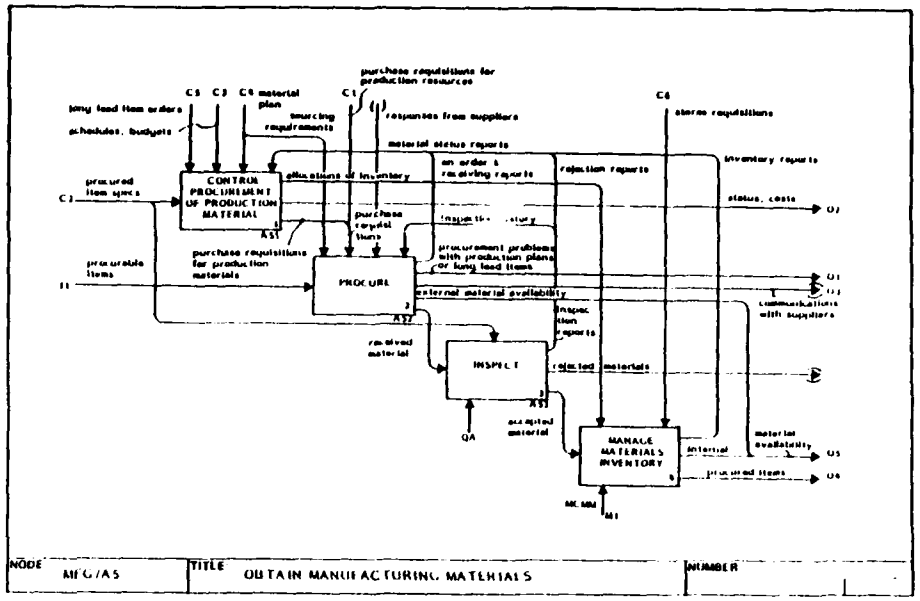

A51 Control Procurement of Production Materials

This function is responsible for procurement of the required production materials. Total material requirements (Box 1) are identified from the advanced orders (Long Lead), the material plan (C3) and scheduled requirements (C2). An inventory reconciliation (Box 2) is accomplished and additional procurement needs are identified (A51.203). An ordering approach is identified (Box 3) and material requisitions (Box 4) are written.

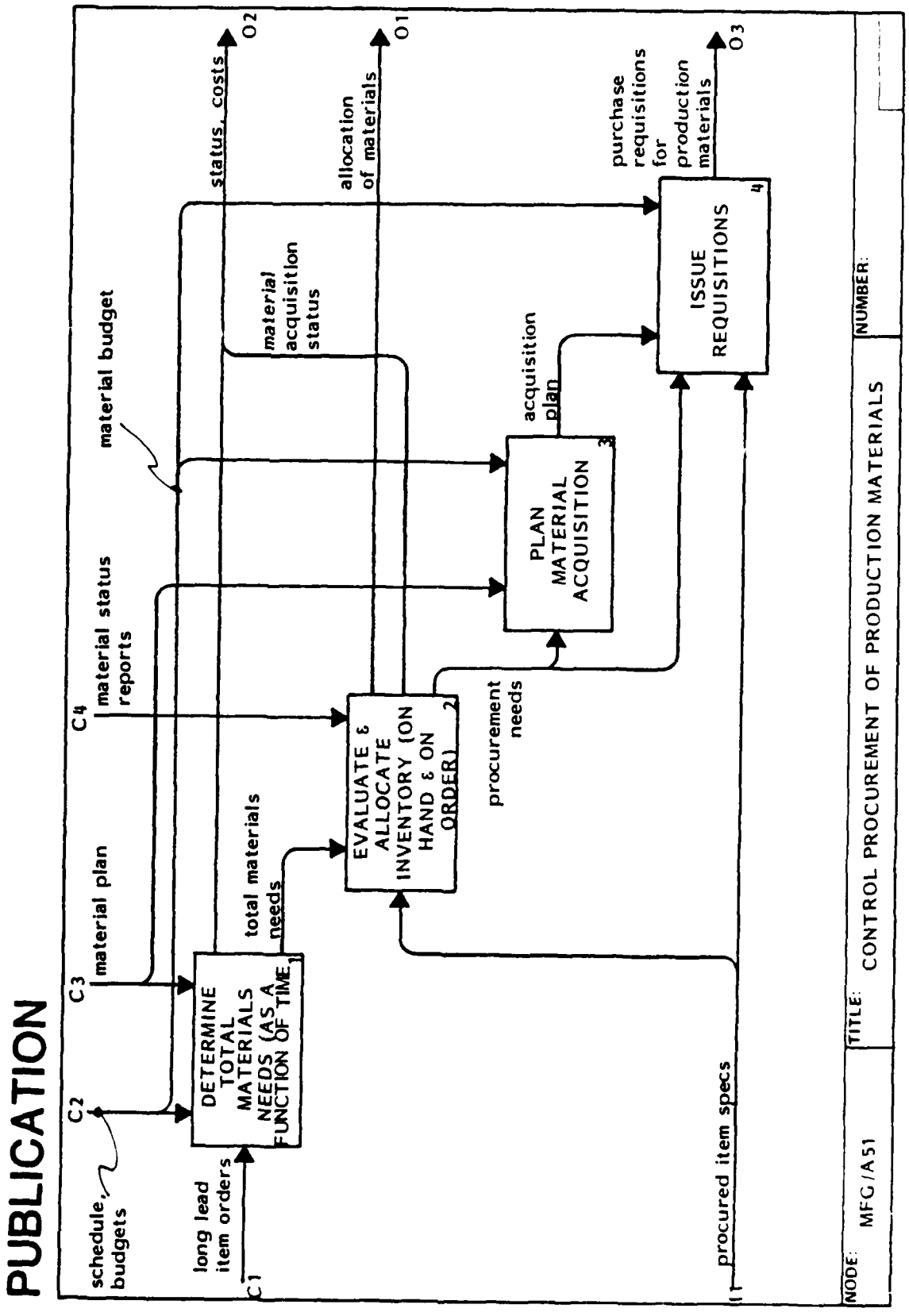
PUBLICATION
C1
C2
C3
C4
schedule, budgets
long lead item orders
material plan
material status reports
material budget
DETERMINE TOTAL MATERIALS NEEDS (AS A FUNCTION OF TIME) 1
total materials needs
EVALUATE & ALLOCATE INVENTORY (ON HAND & ON ORDER) 2
procurement needs
PLAN MATERIAL ACQUISITION 3
acquisition plan
ISSUE REQUISITIONS 4
procured item specs
I1
material acquisition status
status, costs
O2
allocation of materials
O1
purchase requisitions for production materials
O3
NODE: MFG/A51
TITLE: CONTROL PROCUREMENT OF PRODUCTION MATERIALS
NUMBER:

PUBLICATION

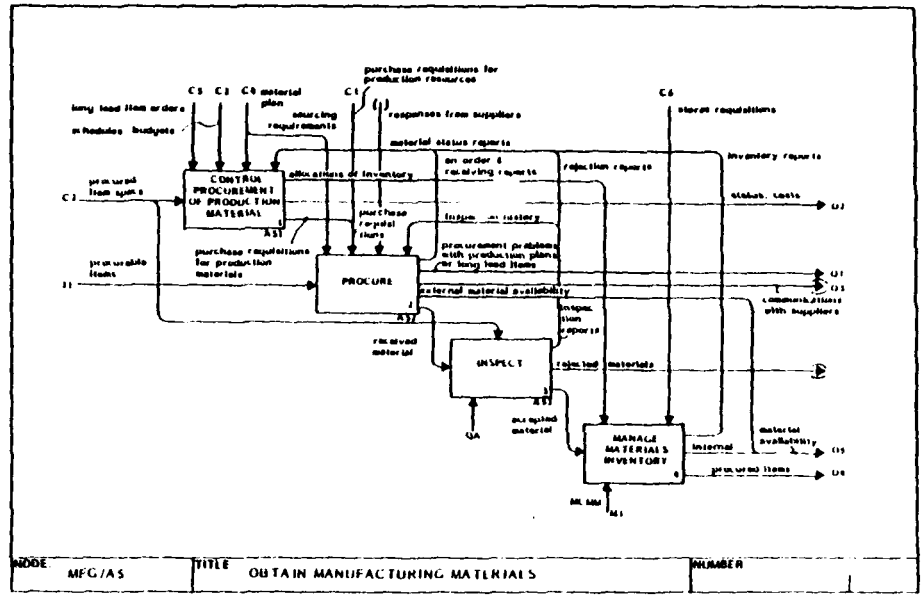

A52 Procure

This function is responsible for developing orders, tracking, receiving purchased parts and materials, and closing orders. It collates (Box 1) data from vendor listing sources requirements, purchase requisition, and inspection history. The collected package goes to the place order (Box 2) function. From this function purchase orders go to the selected vendor(s) for work. They are tracked (Box 3) and complete work is received (Box 4). The orders are then closed (Box 5).

PUBLICATION

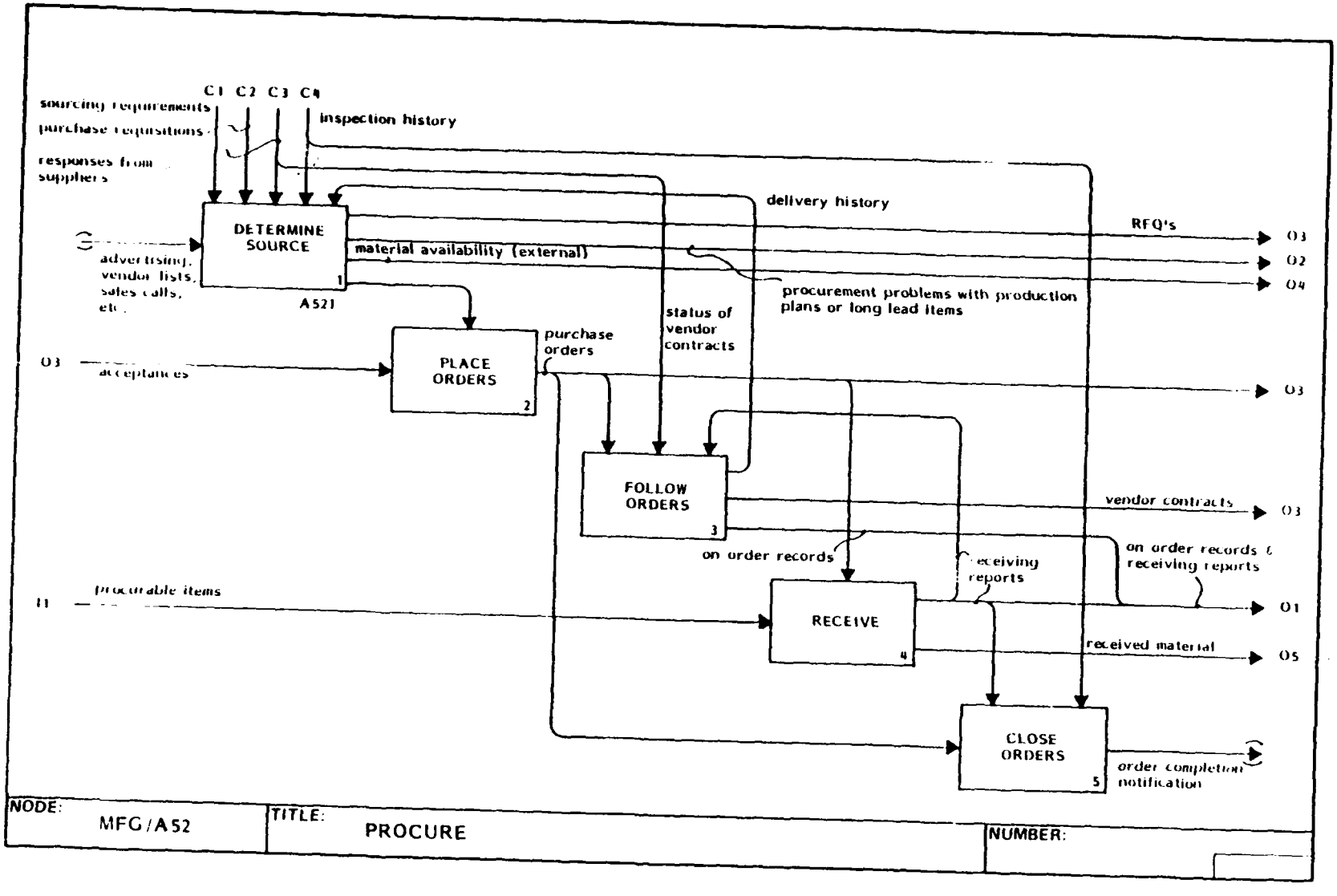

FTR110410000U
8 September 1963

A521 Determine Source

This function is responsible for surveying and evaluating outside sources to select vendors that meet the established criteria (C1). Sources that are identified (Box 1) as meeting the requirements are solicited for quotes (Box 2). The quotes are evaluated and a vendor (source) is selected (Box 3).

PUBLICATION

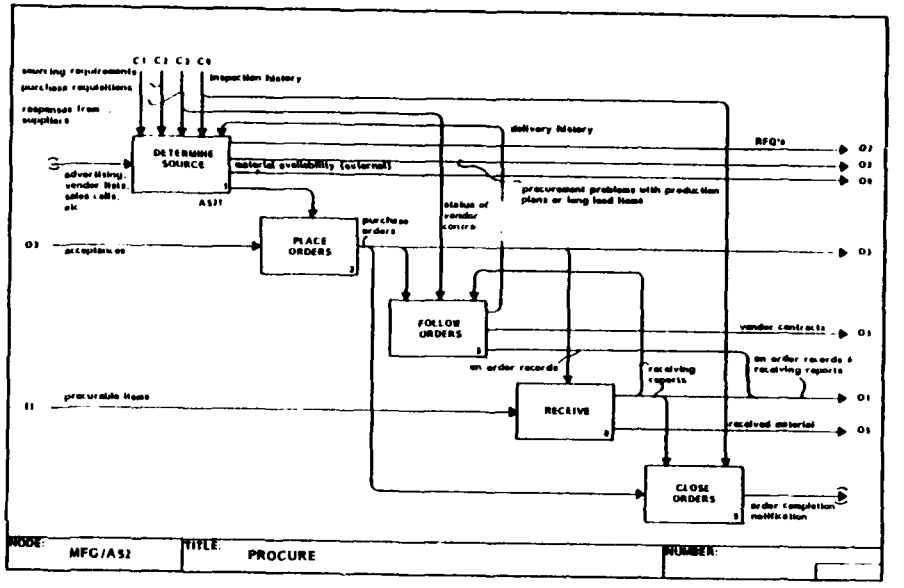

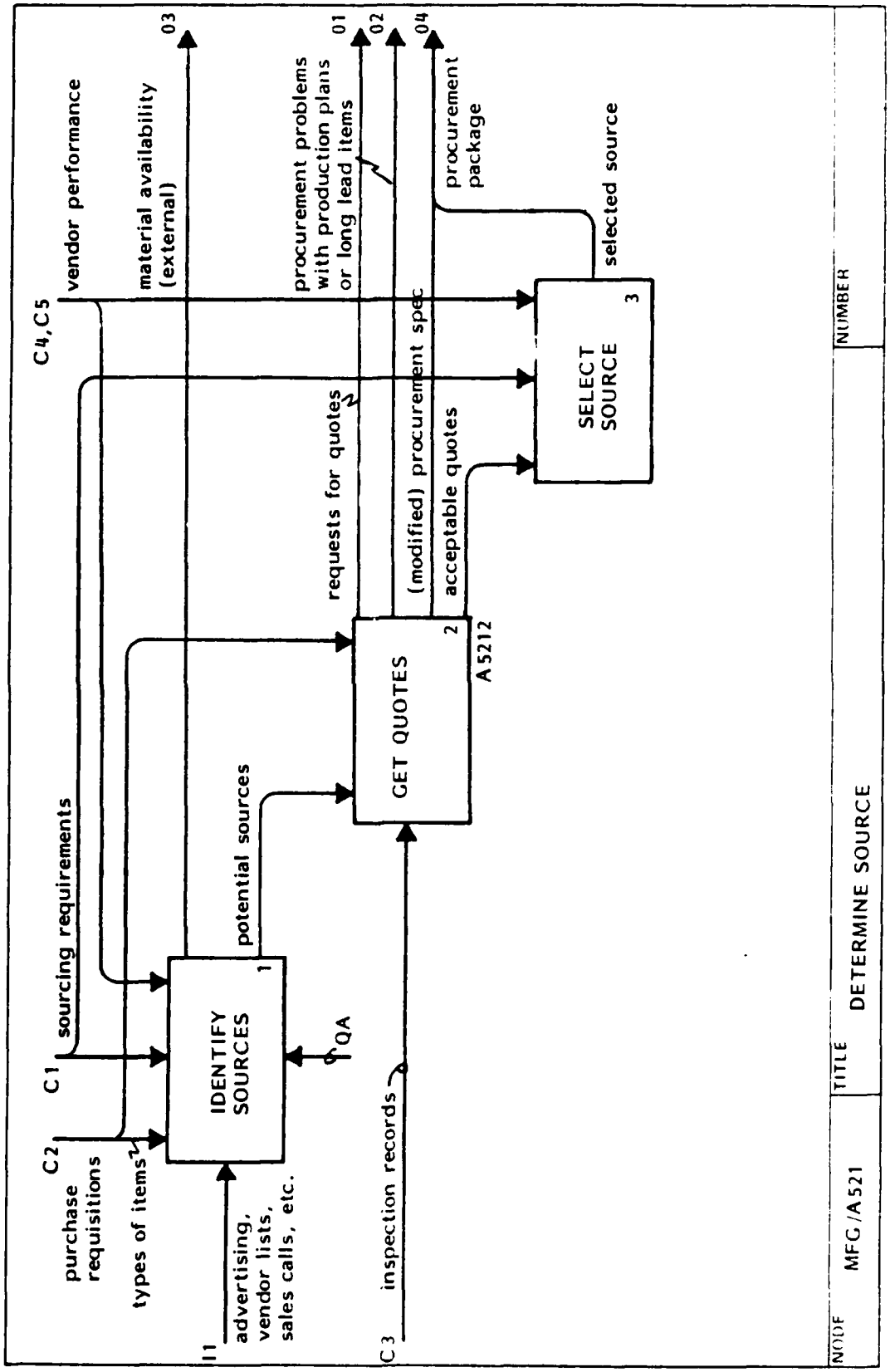
PUBLICATION
C1
sourcing requirements
C2
purchase requisitions
types of items
I1
advertising, vendor lists, sales calls, etc.
IDENTIFY SOURCES
1
potential sources
QA
C3
inspection records
GET QUOTES
2
A5212
requests for quotes
(modified) procurement spec
acceptable quotes
C4,C5
vendor performance
material availability (external)
O3
procurement problems with production plans or long lead items
O1
O2
O4
procurement package
SELECT SOURCE
3
selected source
NODE
MFG/A521
TITLE
DETERMINE SOURCE
NUMBER

A5212 Get Quotes

This function is responsible for the vendor (source) interface on parts and materials quotes. It selects bidder(s) (Box 1) from potential source (C1) and requests quotations (Box 2). It has an interchange (Box 3) with vendors to clarify any doubtful points. It then reviews the quotes and evaluates them (Box 4) identifying the acceptable quotes (04).

PUBLICATION

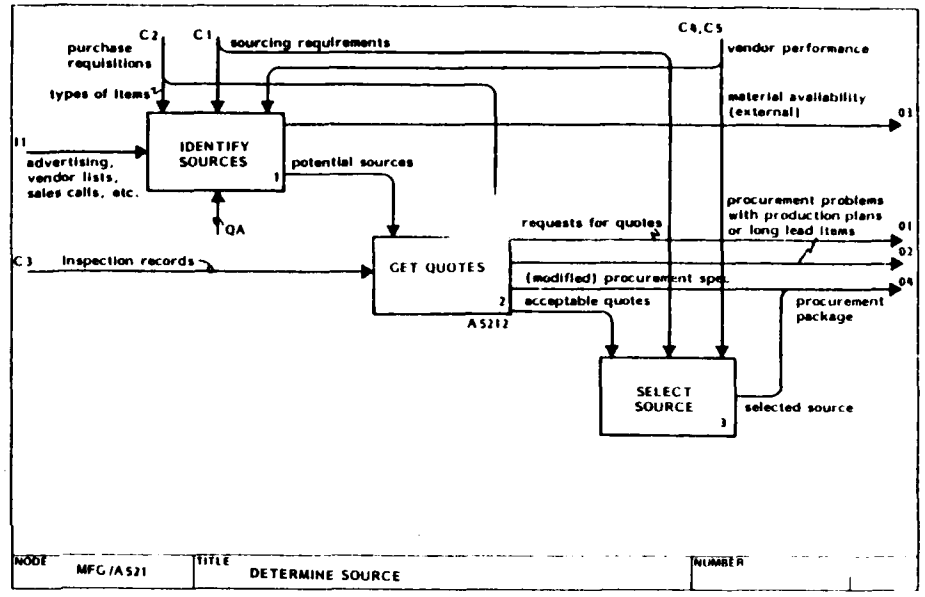

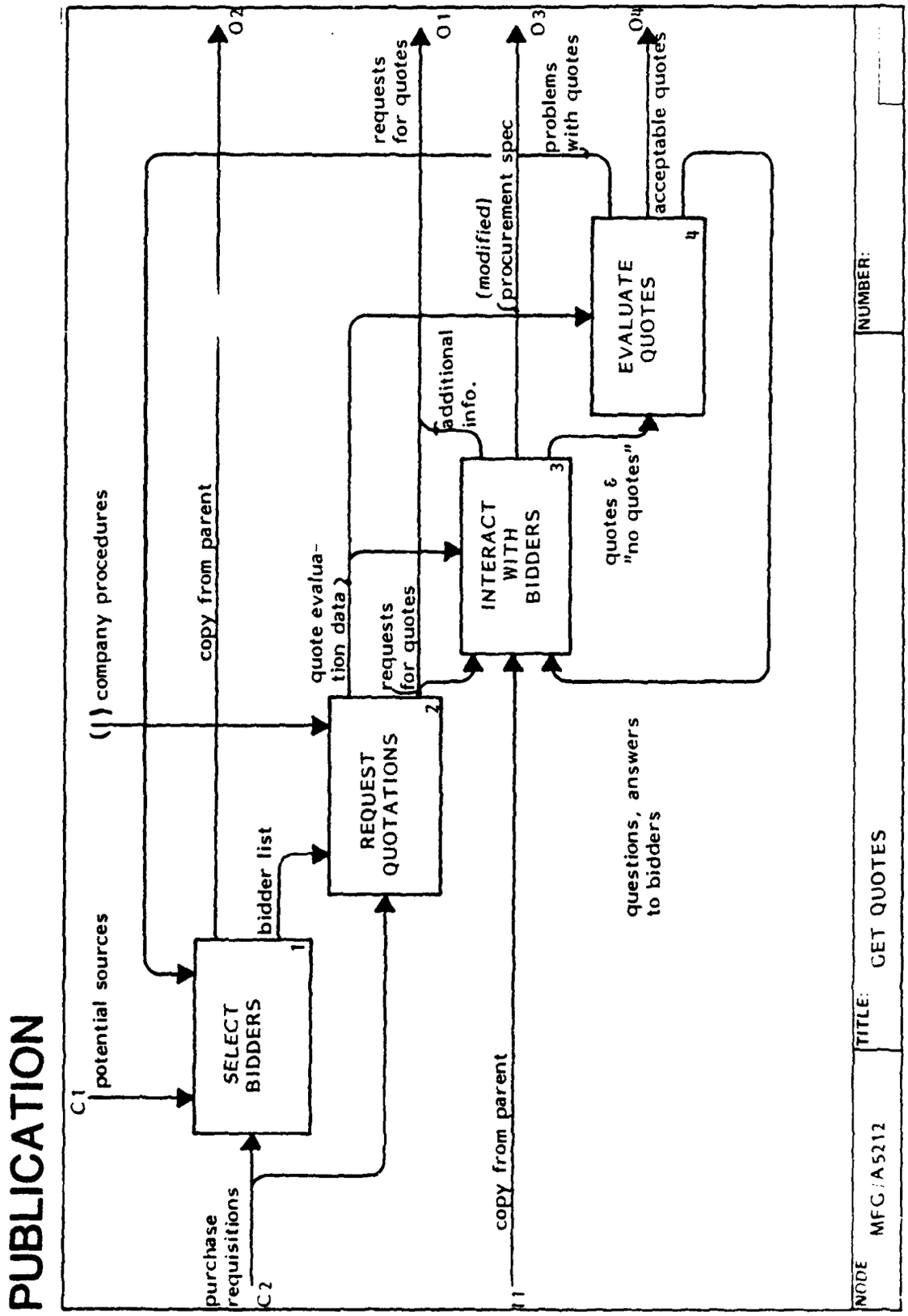
PUBLICATION
C1
potential sources
SELECT BIDDERS
1
purchase requisitions
C2
bidder list
REQUEST QUOTATIONS
2
(I) company procedures
copy from parent
quote evaluation data
requests for quotes
O2
requests for quotes
O1
INTERACT WITH BIDDERS
3
additional info.
copy from parent
I1
(modified) procurement spec
questions, answers to bidders
quotes & "no quotes"
O3
problems with quotes
EVALUATE QUOTES
4
acceptable quotes
O4
NODE
MFG/A5212
TITLE:
GET QUOTES
NUMBER:

A53 Inspect

Incoming materials are classified as "accepted" (Box 1 02) or "rejected" (Box 1 03) by incoming inspection. The "rejected" material may be reworked (Box 3), disposed of as scrap or returns to the vendor (Box 2 02), or accepted for use "as-is." Rework is usually performed by normal production areas which are detailed by MFG/A63.

PUBLICATION

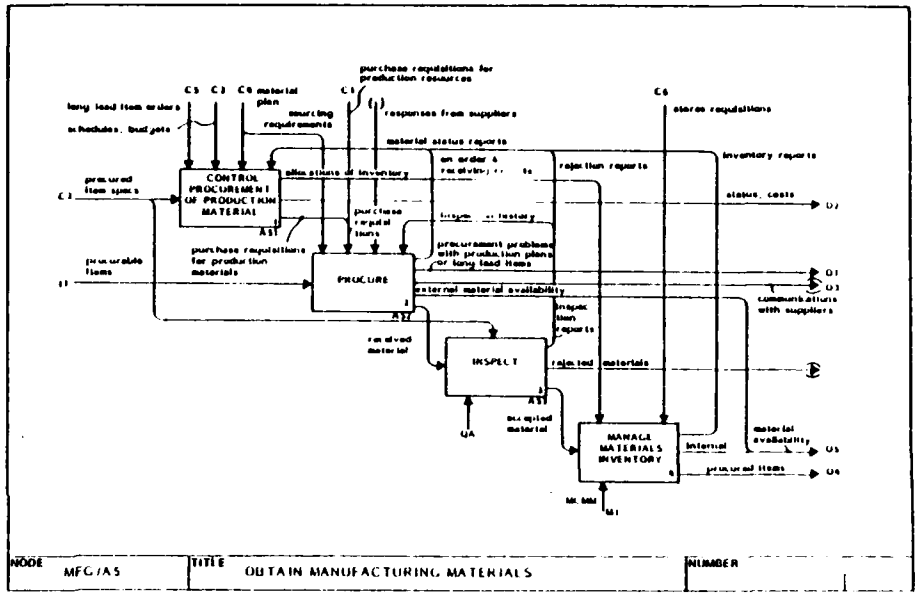

FTR110410000U
8 September 1983

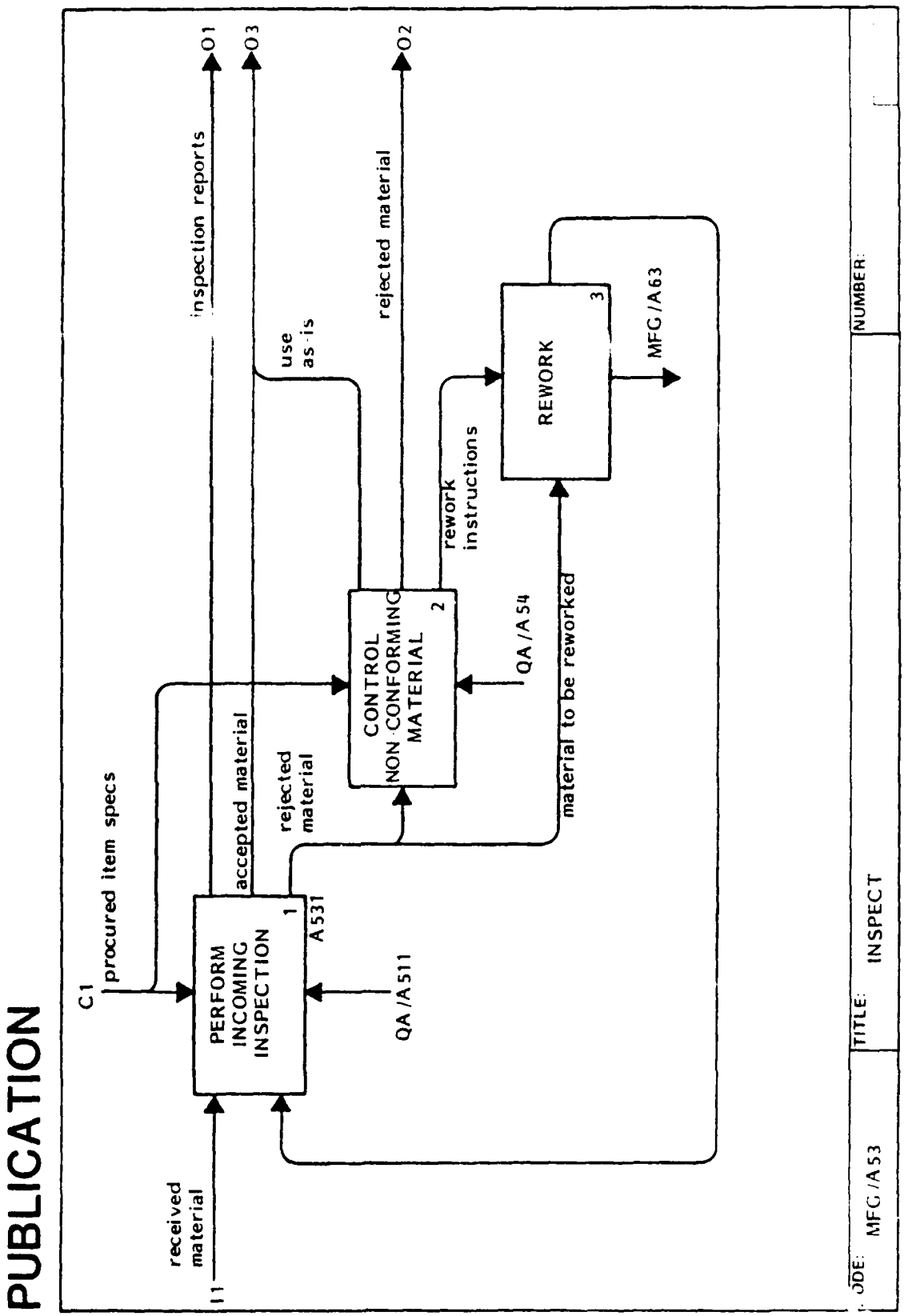
PUBLICATION
C1
procured item specs
received material
I1
PERFORM INCOMING INSPECTION
1
A531
QA/A511
accepted material
rejected material
inspection reports
O1
O3
use as-is
CONTROL NON-CONFORMING MATERIAL
2
QA/A54
rejected material
O2
rework instructions
material to be reworked
REWORK
3
MFG/A63
NUMBER:
TITLE:
INSPECT
CODE:
MFG/A53

A531 Perform Incoming Inspection

Materials and items, along with corresponding receiving documentation, including Certificates of Compliance (for vendor performed inspections), are screened for completeness. If incomplete or incorrect, the material is forwarded to a "hold area" for subsequent action. Otherwise, the material is forwarded to the inspector, along with a TI&E Work Package consisting of all the documentation required to perform the inspection. This documentation includes the work instructions, inspection procedures and a history file. The history file includes level of inspection required (100% inspection, sampling inspection, ID and cursory damage checks, etc.) or other special checks that may be required. Material is either accepted or declared non-conforming with supporting documentation for disposition by the Material Review Board (MRB).

PUBLICATION

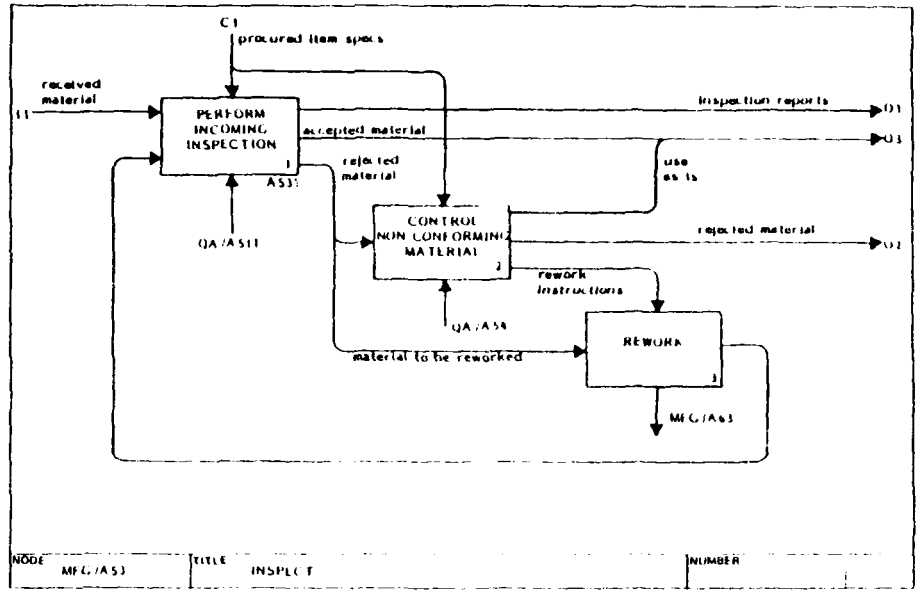

PUBLICATION

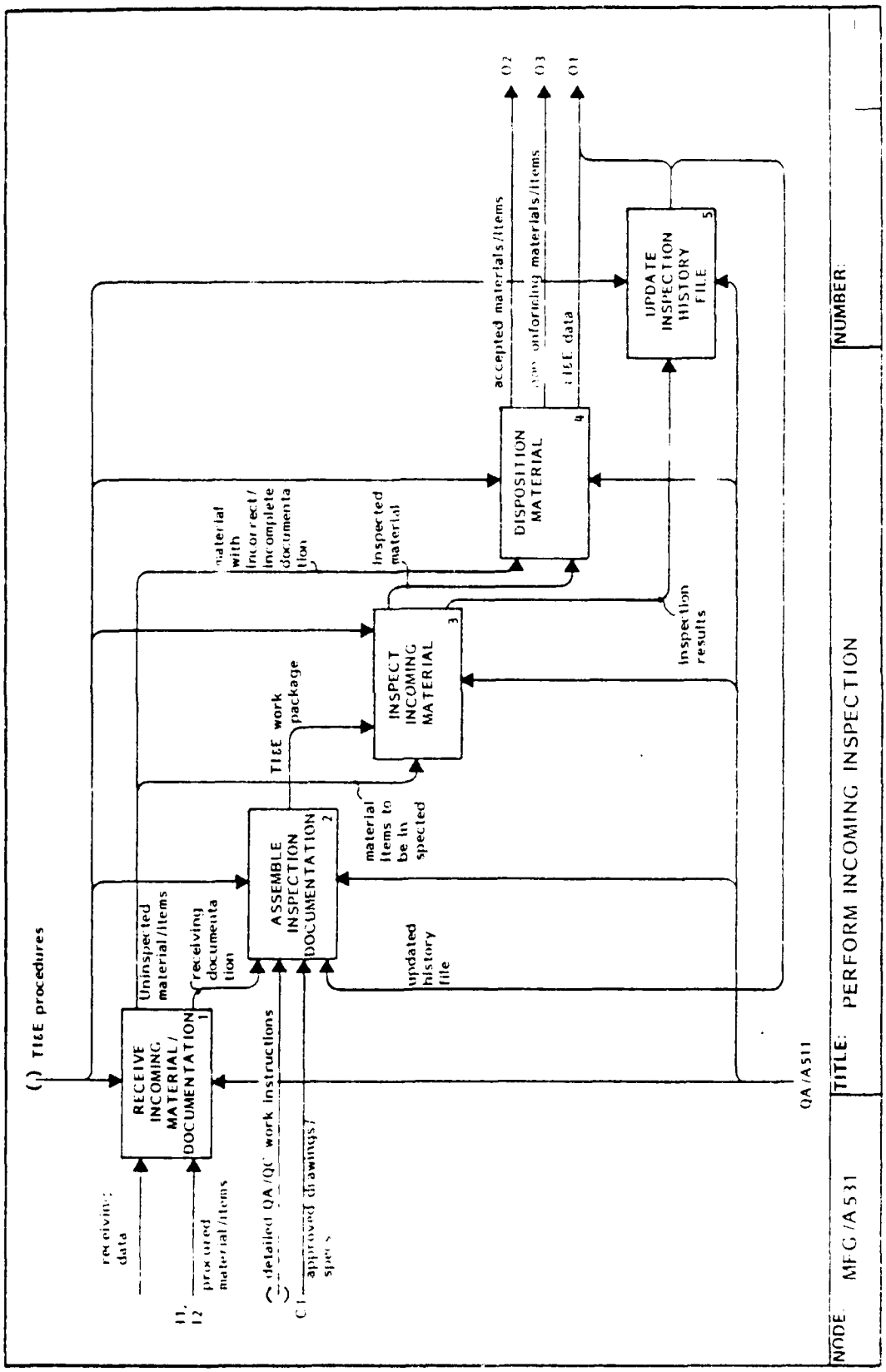

PUBLICATION

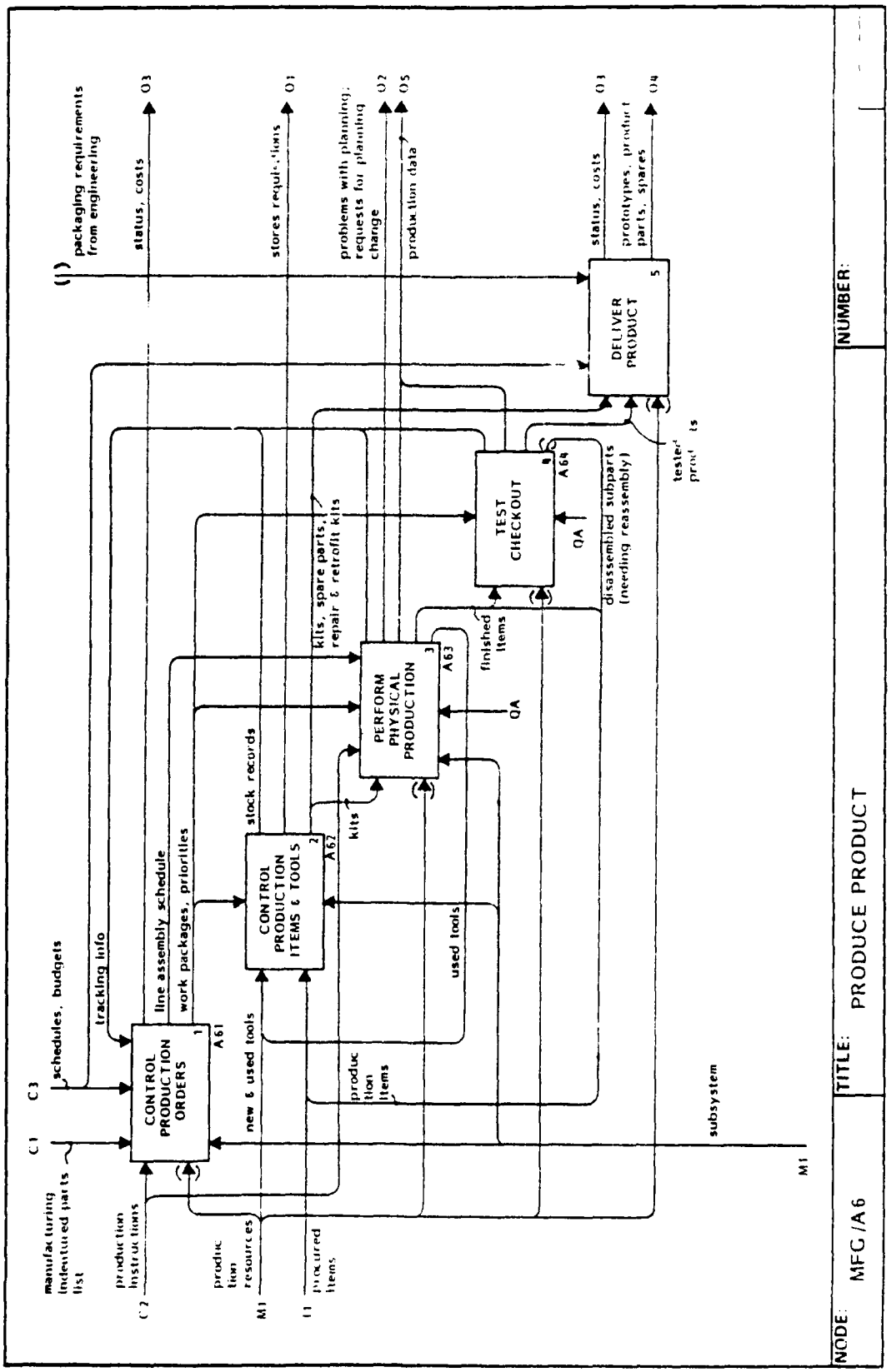

A6 Produce Product (con't)

Glossary

Production Instructions - Operation instructions and routing for making any item.

Kits - Raw materials, component parts, tools required for producing a specific quantity of some item.

Work Package - A specification of an item to be made, the quantity, the date by which it is due, and the instructions for making it.

Priorities - The relative importance of any one work package with respect to other work packages.

Tracking Information - The location and status of any item which is being made according to a work package, that is, the status of any work in process.

Stores Requisitions for Tools and Procured Materials - Requisitions to obtain these from tools stores or materials stores.

Finished Subparts - The result of completing any production work package. They could be detailed parts, subassemblies, assemblies, or systems, anything which is completed going into finished good stores.

Problems in Instructions, Request for Planning Changes - Any difficulty encountered in performing physical production which requires (or makes desirable) a change in the planning of the production of the item.

Production Technical Data - All records relating to the production of any given serial number product. That is the inspection records, the serial numbers of subitems that go into it, material review actions for any item, etc.

Spare Parts, Repair and Retrofit Kits - Deliverable items which are less than the total product.

Delivered Products - The objects ordered by the customer, which can include spares.

PUBLICATION

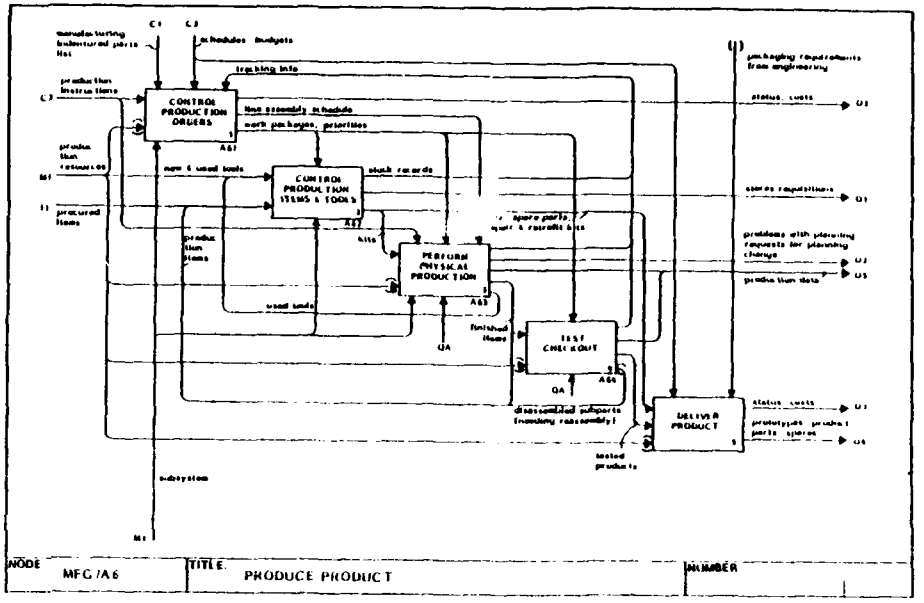

A61 Control Production Orders

Using the manufacturing indentured parts lists, schedules, as well as stock records and tracking information, production control develops the detailed production requirements and spares, repair and retrofit ship orders.

The production requirements incorporated in a release schedule are adjusted for changes due to Engineering Changes, procurement status and shortage items.

Work Packages released to the shop are subject to additional adjustments at the work center level where priorities are set.

Once released these orders are followed up for status reporting and cost reporting for feedback to Boxes 2 and 4.

Glossary

Production Requirements - The detailed total requirement to satisfying the schedule; includes lowest level part numbers, quantities, required dates.

Budgeted Capacity - Total available in-house facility and resources available for production.

Release Records - Data on orders issued; including due dates, vendor or department doing work, cost or time estimates.

PUBLICATION

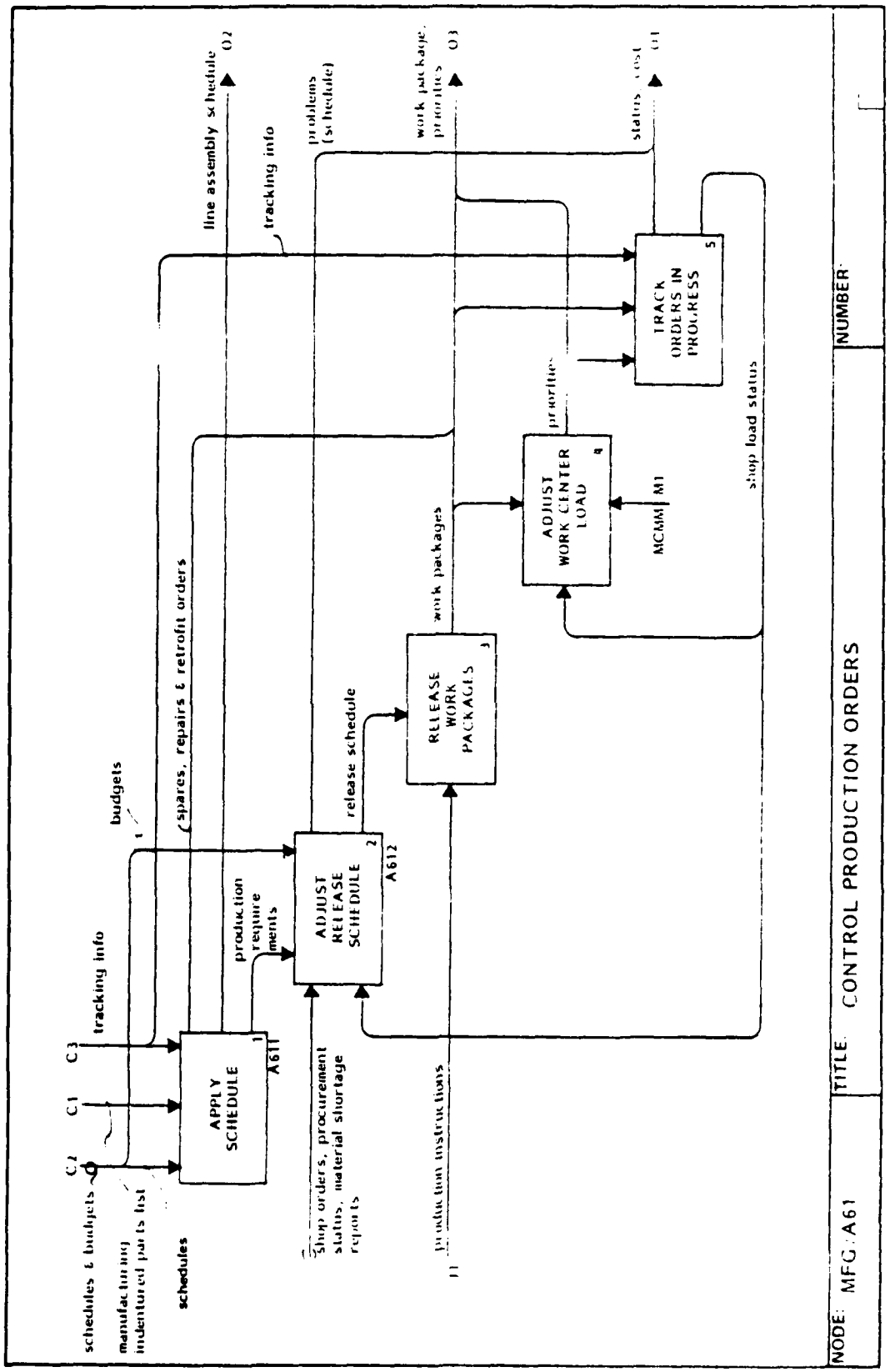

A611 Apply Schedule

In applying the schedule tracking information, stock records and schedules are used to compare the total requirement to the existing stock position.

For those items additionally required, lot sizes are set and order dates are determined.

The production requirement is released and due dates are determined based on completion dates and WIP status.

Glossary

Net Needs - The total production requirement less stock on hand to meet requirements.

WIP Status - Work in Process Status.

PUBLICATION

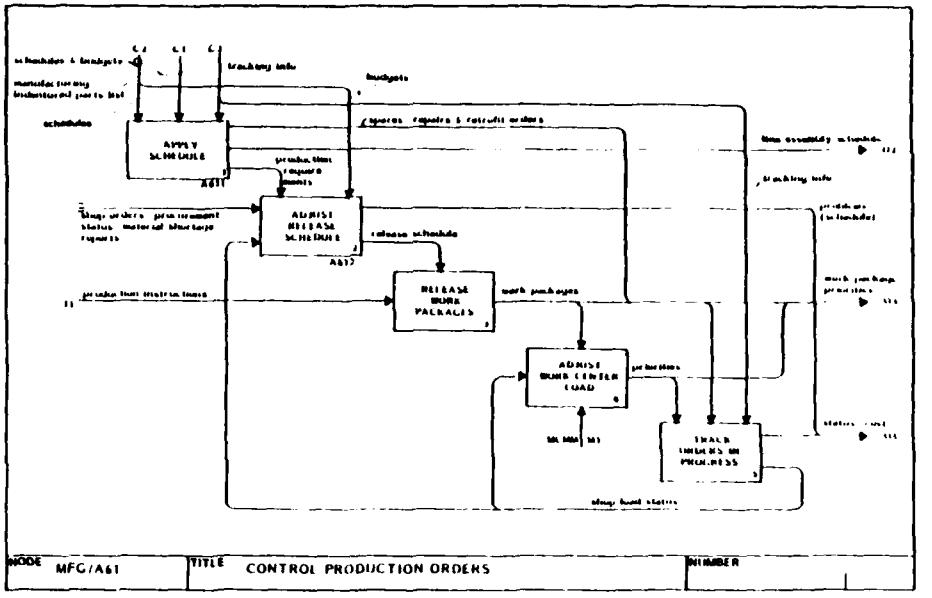

PUBLICATION

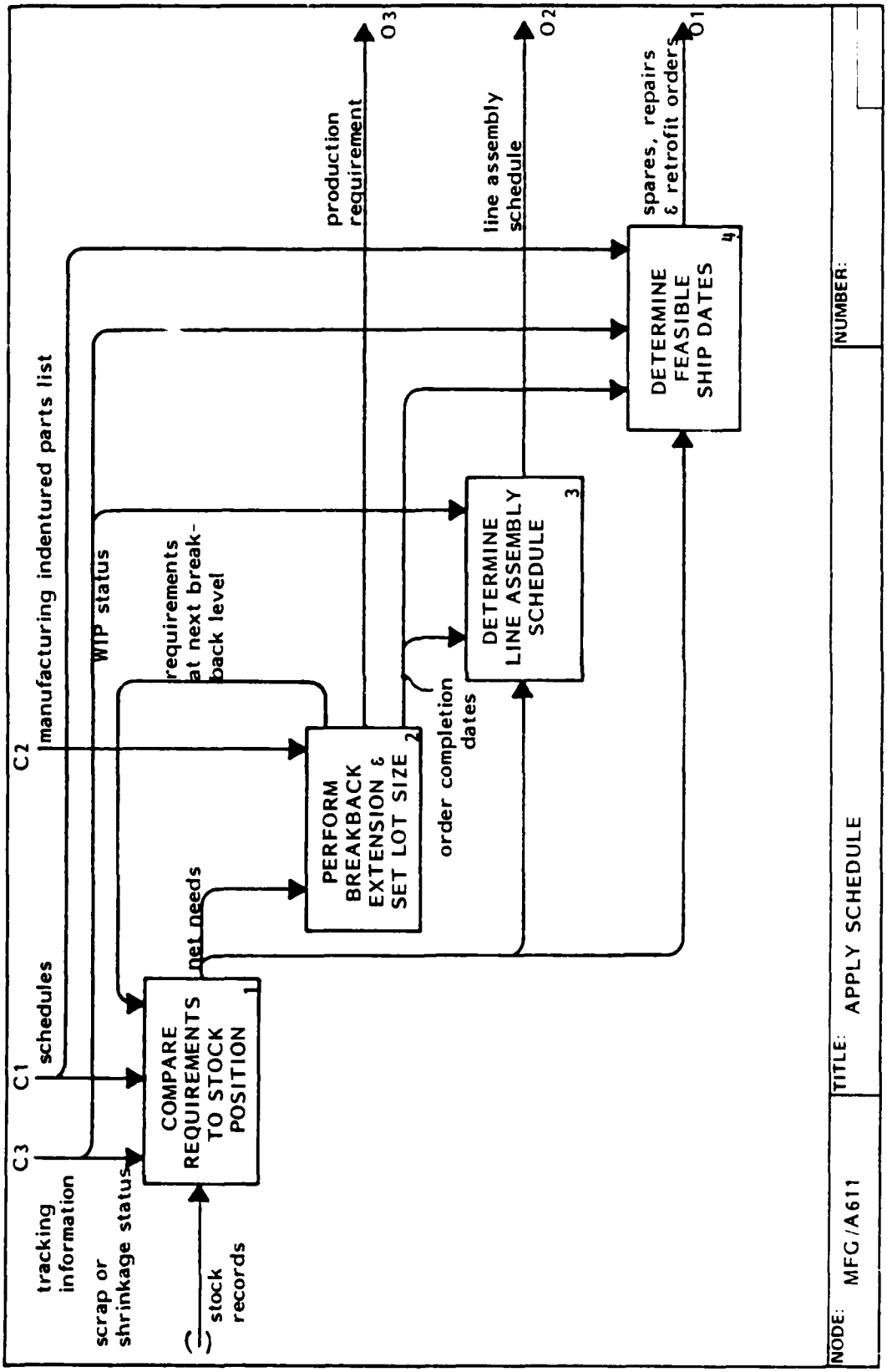

A612 Adjustment Release Schedule

Based on the Production Requirements and existing load, a forecasted load on the shop to meet the requirement is determined.

This load is adjusted for actual load conditions.

These adjustments take the form of revised scheduling in the shop due to shifting of the load dates, shop orders, and material shortages.

Glossary

Expected Load - Load as forecasted.

Material Shortage Report - Consists of new promise dates, lot effectivity and work breakdown structure impact for shortage items.

PUBLICATION

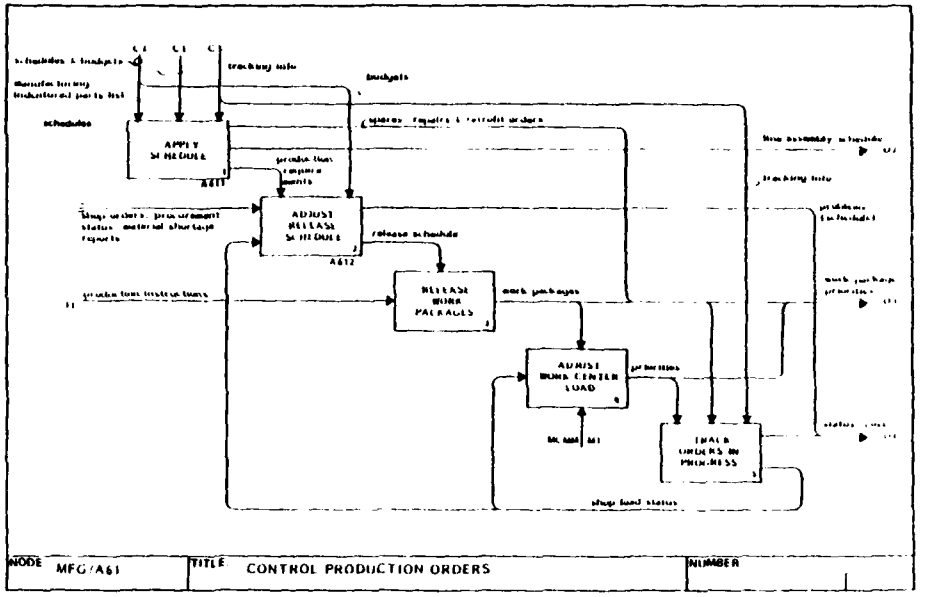

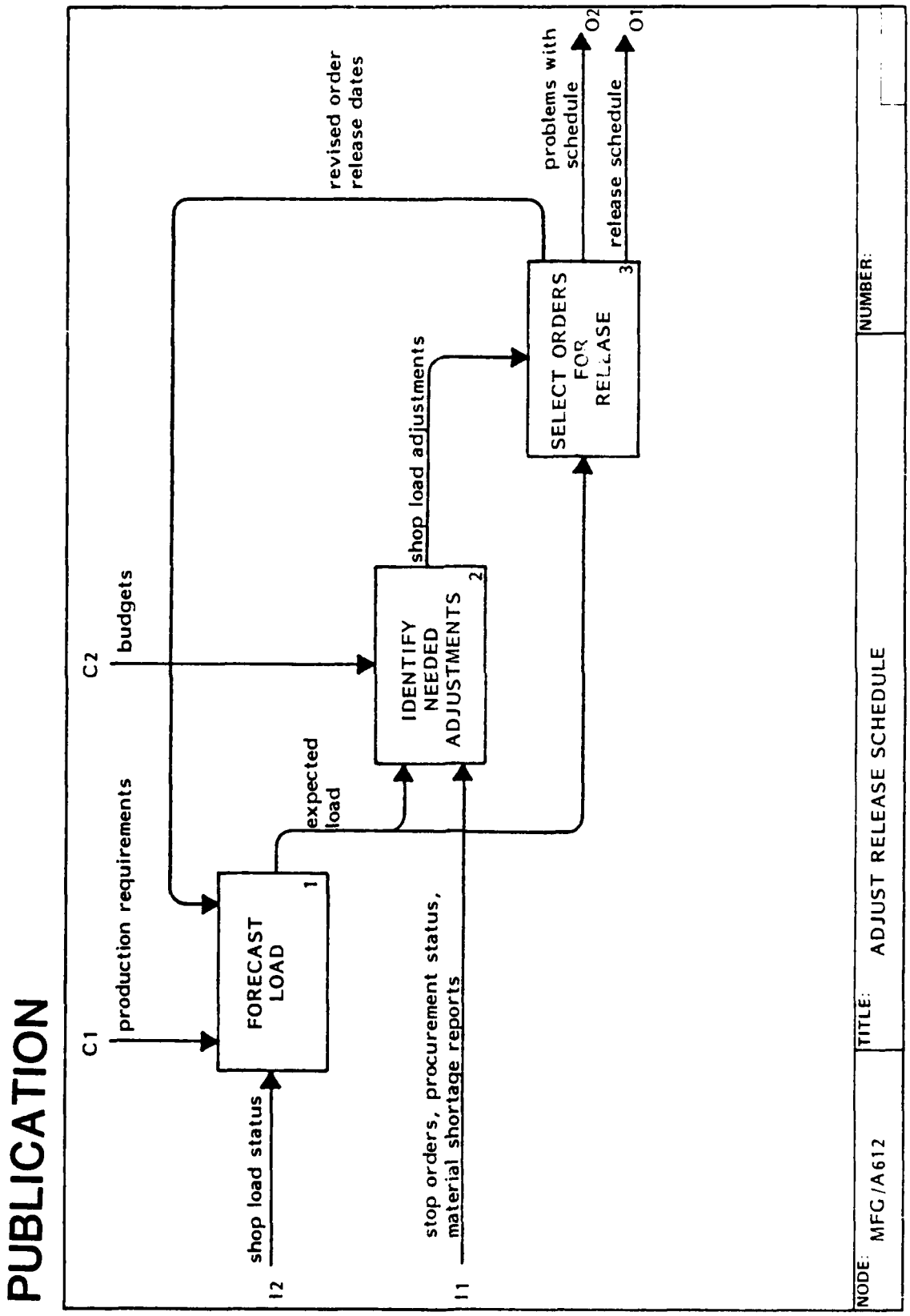
PUBLICATION
C1
production requirements
C2
budgets
I2
shop load status
I1
stop orders, procurement status, material shortage reports
FORECAST LOAD
1
expected load
IDENTIFY NEEDED ADJUSTMENTS
2
shop load adjustments
revised order release dates
SELECT ORDERS FOR RELEASE
3
problems with schedule
O2
release schedule
O1
NODE:
MFG/A612
TITLE:
ADJUST RELEASE SCHEDULE
NUMBER:

A62 Control Production Items and Tools

From the work packages, Box 1 provides tool and material requisitions and a pull list to be used against items used in the current inventory. Meanwhile, procured items, new and used tools, and production items are being stored (in Box 2) to provide the inventory. Using the pull list and the work packages, Box 3 provides kits, spare parts, and repair and retrofit kits required for the physical production. Status of the inventory transactions are used in Box 4 to maintain the stock records.

Glossary

Shortage Reports - Reports listing items required and not in stock. These items generally have lead time available for normal procurement.

Receipt Records - Invoices and other documents accompanying incoming items.

Stock Records - A listing of on-hand inventory.

PUBLICATION

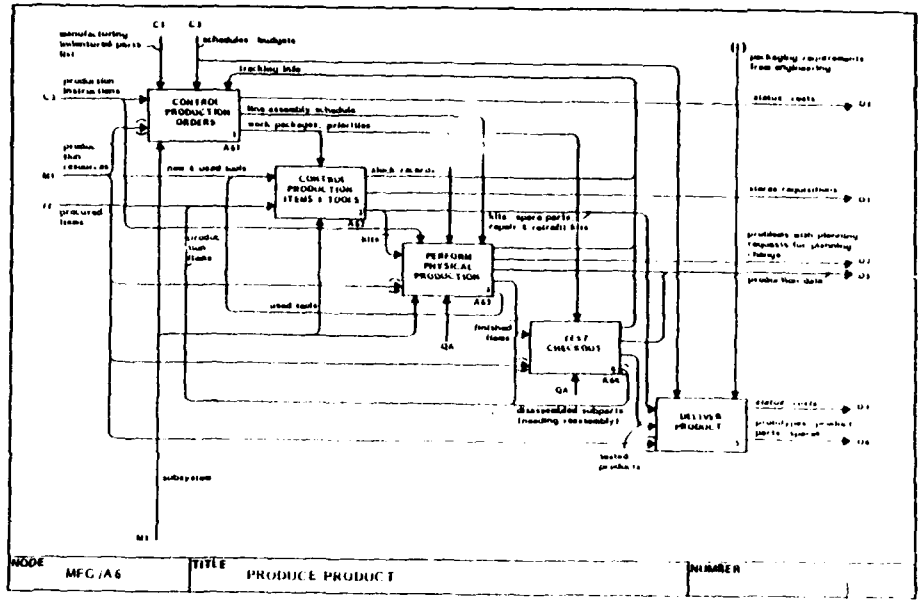

PUBLICATION

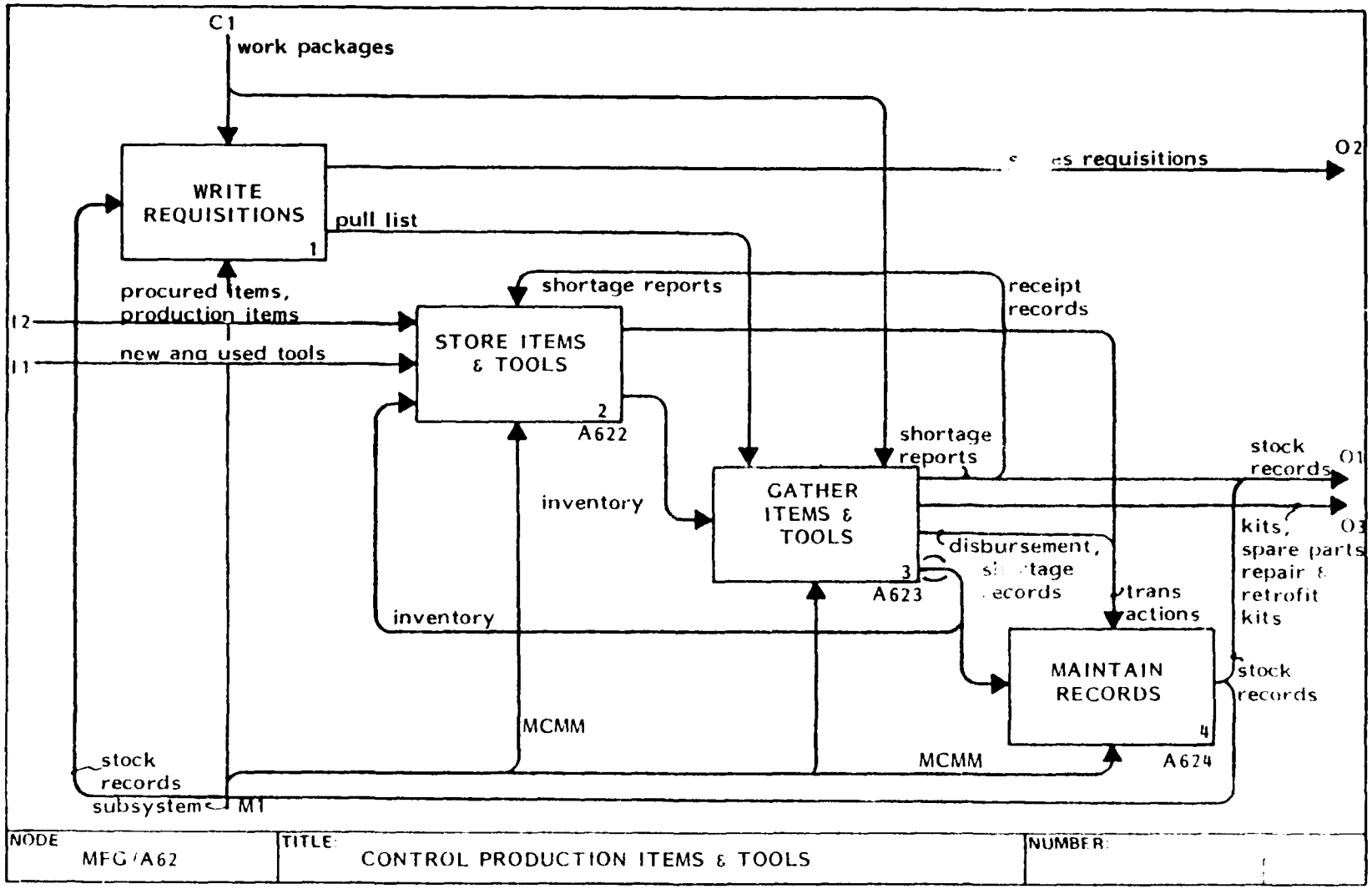

NODE	TITLE	NUMBER
MFG/A62	CONTROL PRODUCTION ITEMS & TOOLS	

A622 Store Items and Tools

As parts and tools are received in the stores areas, counts and identity are verified. Those items required for immediate delivery are disbursed. The remaining items are prepared for storage if special preparations are required.

The items are then stored in their proper location until they are requisitioned. In addition receipt records are prepared to properly update inventory records.

PUBLICATION

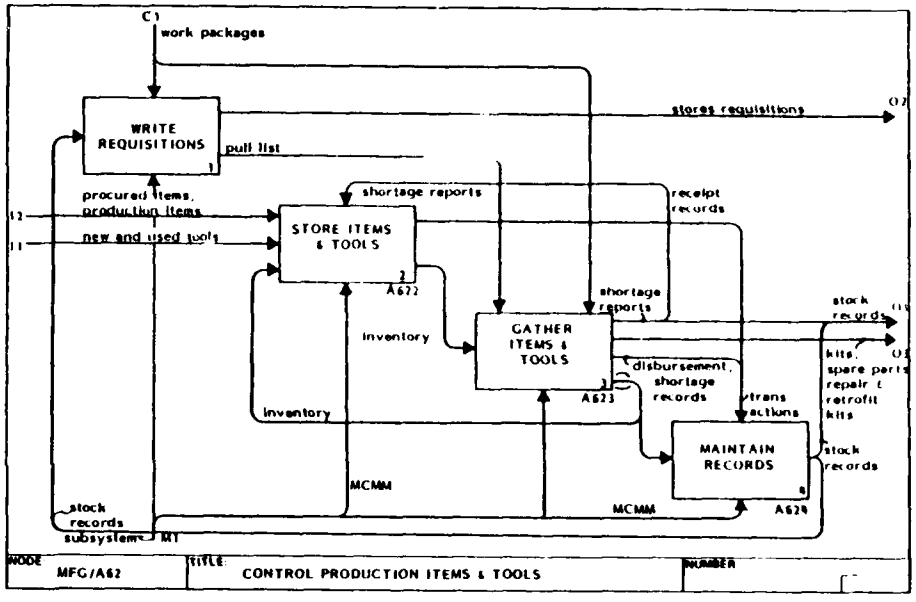

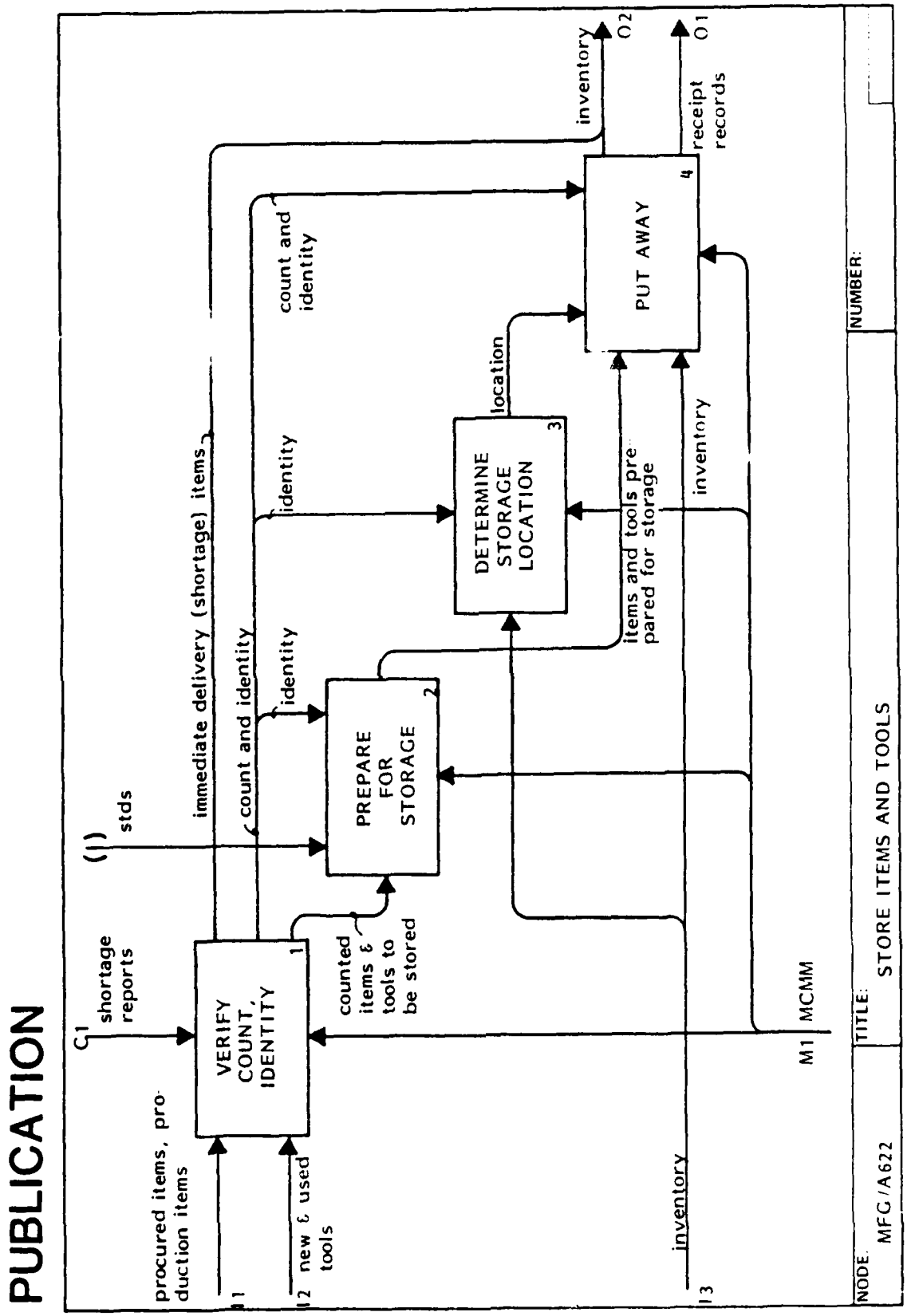
PUBLICATION
procured items, production items
I1
I2 new & used tools
I3
C1 shortage reports
(1) stds
VERIFY COUNT, IDENTITY
1
immediate delivery (shortage) items
count and identity
identity
counted items & tools to be stored
PREPARE FOR STORAGE
2
identity
DETERMINE STORAGE LOCATION
3
location
count and identity
PUT AWAY
4
items and tools prepared for storage
inventory
inventory
inventory
O2
receipt records
O1
M1 MCMM
NODE: MFG/A622
TITLE: STORE ITEMS AND TOOLS
NUMBER:

A623 Gather Items and Tools

As orders are received, items are pulled from inventory, put into kits, and prepared for delivery. Shortages are noted; deliveries against shortages go directly into the needed items and kits. As needed, items and kits are disbursed and inventory records are adjusted.

Glossary

Open Stock Material - Items from stock which are not placed into physical kits for production use.

Disbursement Records - Requisitions and other documents indicating items released from the storage areas.

PUBLICATION

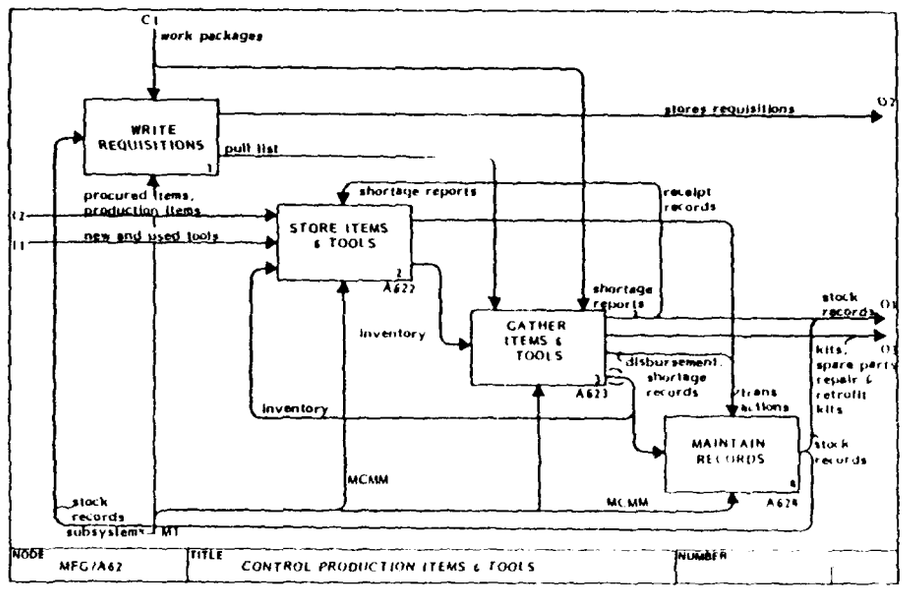

PUBLICATION

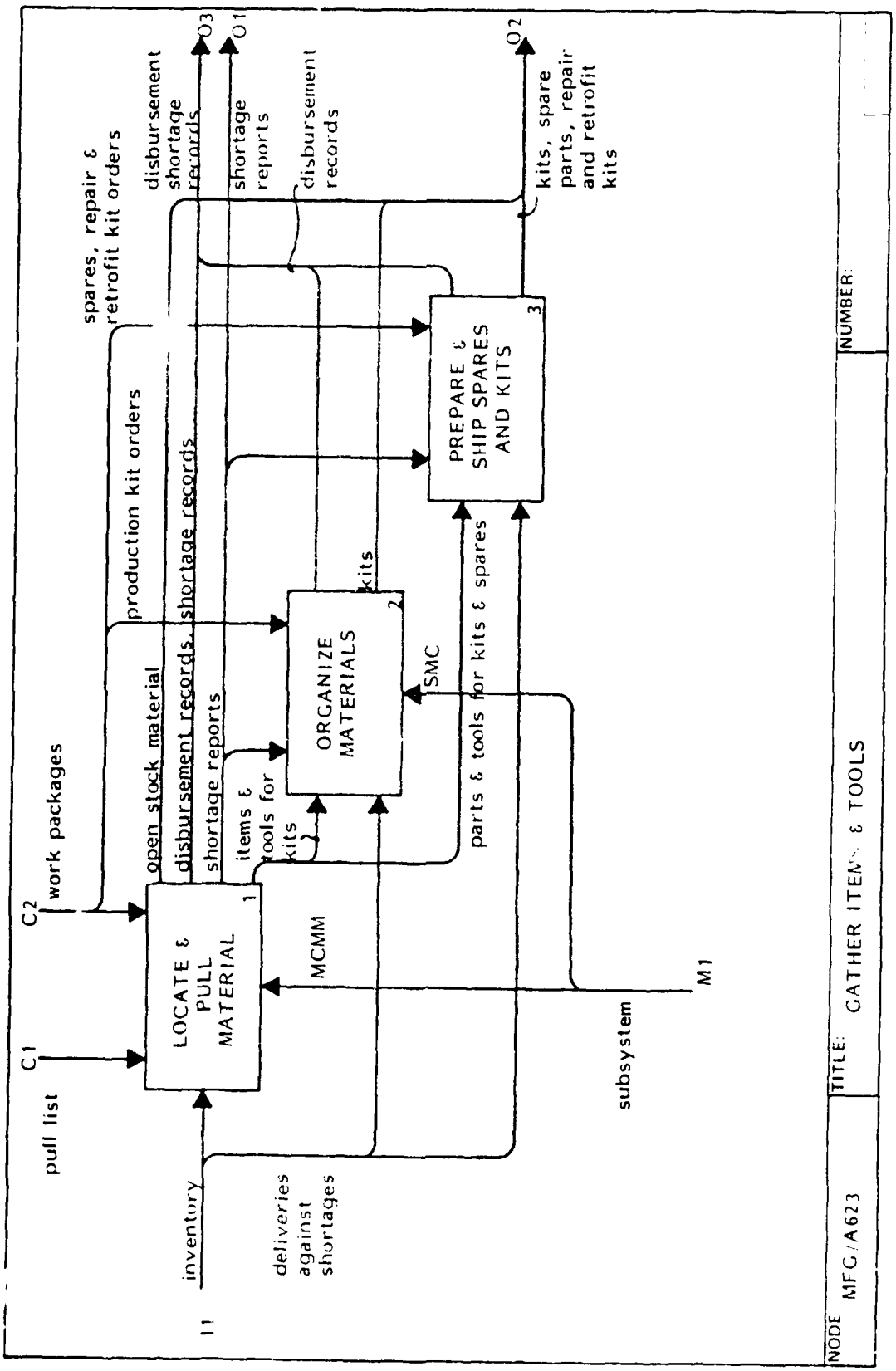

A624 Maintain Records

As items are received and disbursed, stock records are adjusted to reflect the changes. Items are checked to verify counts and corrected accordingly.

PUBLICATION

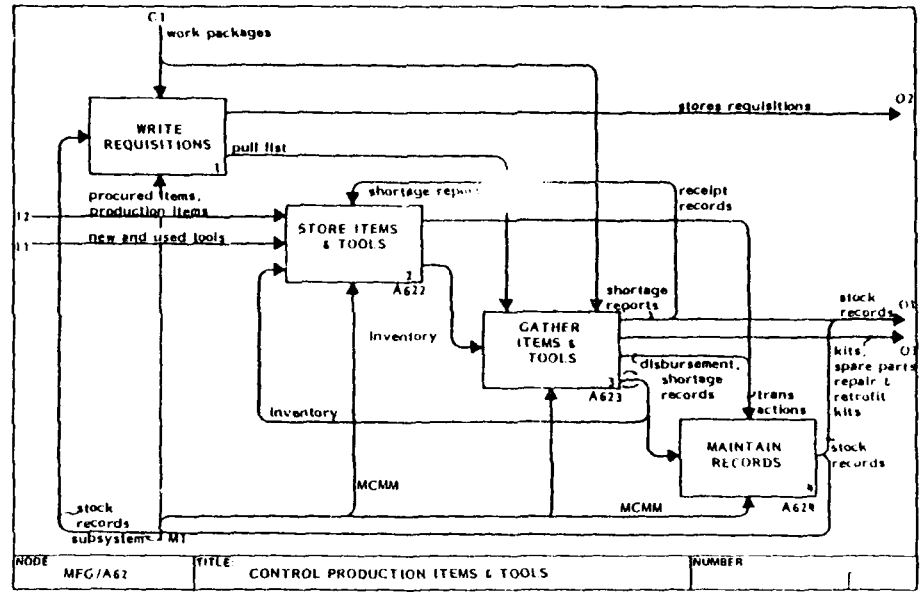

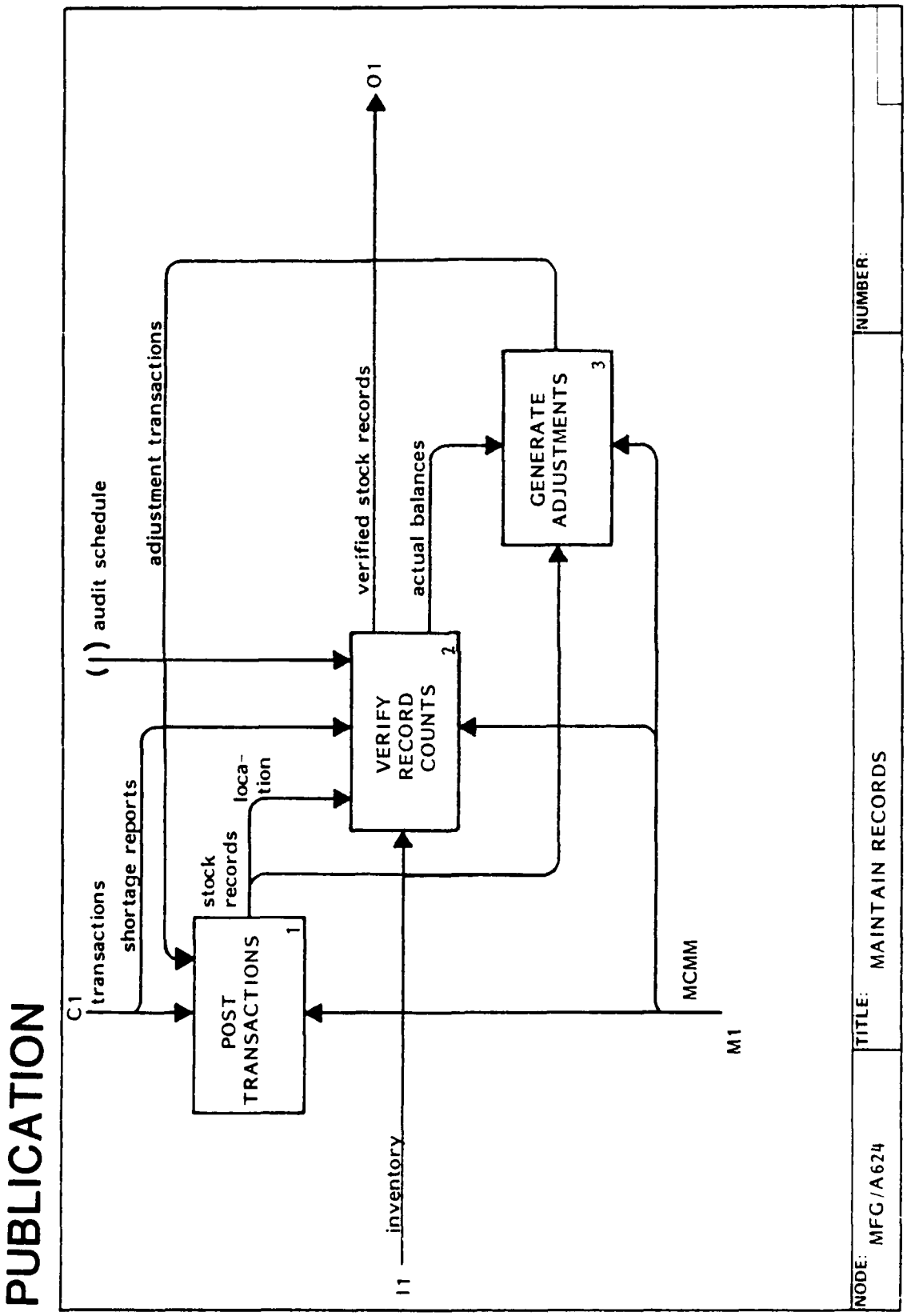
PUBLICATION
C1
transactions
shortage reports
POST TRANSACTIONS
1
stock records
loca-tion
VERIFY RECORD COUNTS
2
(I) audit schedule
adjustment transactions
verified stock records
actual balances
GENERATE ADJUSTMENTS
3
O1
I1
inventory
MCMM
M1
NODE: MFG/A624
TITLE: MAINTAIN RECORDS
NUMBER:

A63 Perform Physical Production

The functions performed by the activities depicted are those which convert purchased items into the end product. The consecutive activities depicted convert raw material into details; details and subassemblies into further subassemblies and assemblies, and finally build subassemblies, details and assemblies into major assemblies and installations.

The three activities are not shown linked as the results of each stage are passed back into storage prior to being released into the next stage at production. (This looping is not visible on this diagram but may be seen at A6).

The work package requirements are the central control on each of the activities The status of each activity is fe back to "Control Production Orders" (A61). Scrapped parts, production time, and operator assignment is also fed back.

In addition to the materials required to be converted into the final product, tools required during these processes are also shown as inputs.

PUBLICATION

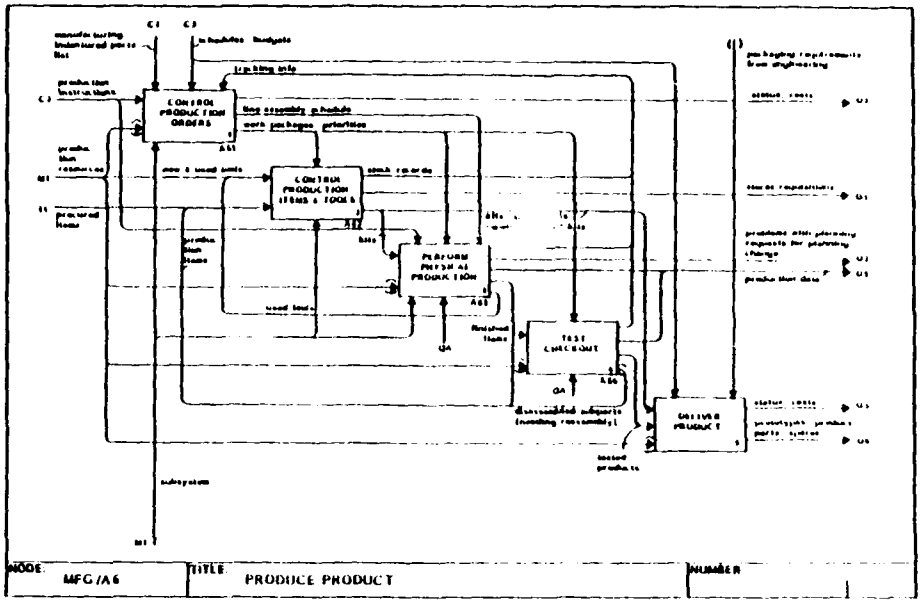

These tools may accompany the materials, or may be obtained at a later time. On completion of the production activity, (or if tools are worn during production), they will be returned to storage for refe - bishment or replacement.

Problems regarding that method of manufacturing stated in the planning instruction, or problems regarding producibility found in the design that have been overlooked in "Plan Production" (A3), will be transmitted to "Plan Production" for resolution.

Finished items may not all be passed to a storage area but may be forwarded for inspection and/or testing, and may be put through a check-out phase prior to delivery.

PUBLICATION

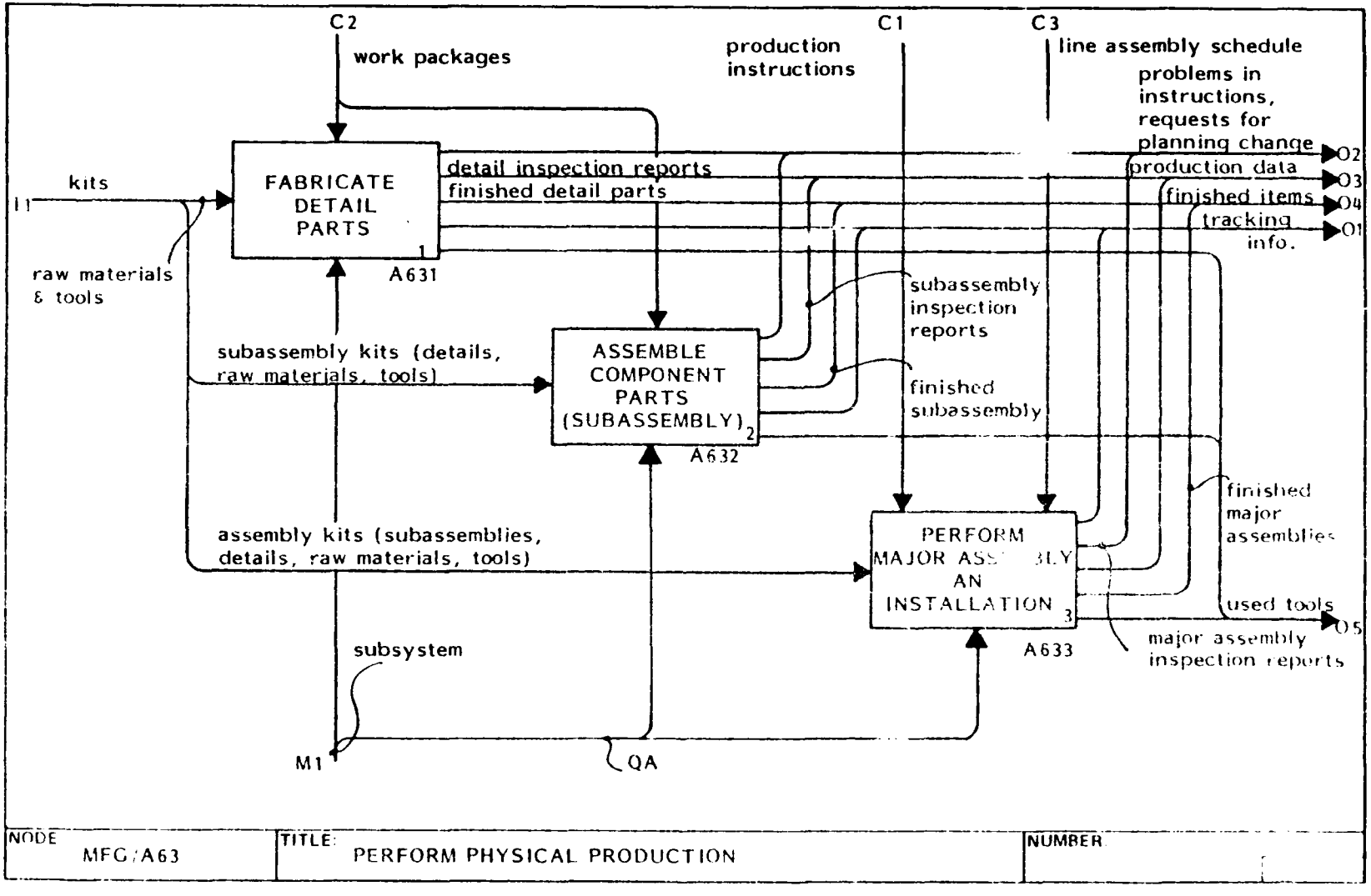

NODE	TITLE	NUMBER
MFG/A63	PERFORM PHYSICAL PRODUCTION	

A63F1 Perform Physical Production (Electronics Version)

This diagram provides an alternate activity breakdown for the physical production of electronic production parts. This diagram is present in the composite model as an illustration of an activity breakdown which would provide a better understanding of physical production related to electronics parts, rather than general aerospace parts (A63). Observe that even though the material to be produced is radically different between the two subjects, the interface to the parent diagram A6 is exactly the same.

PUBLICATION

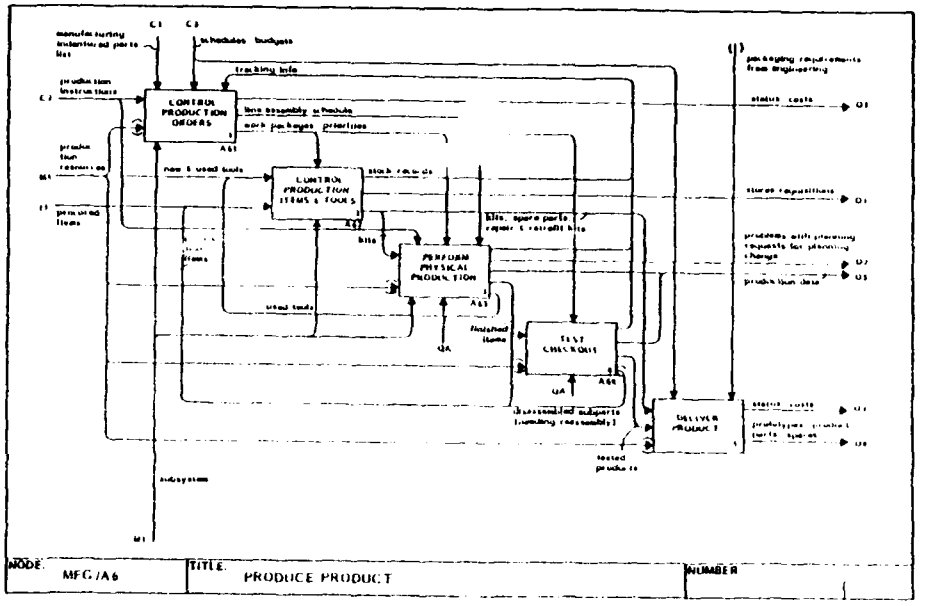

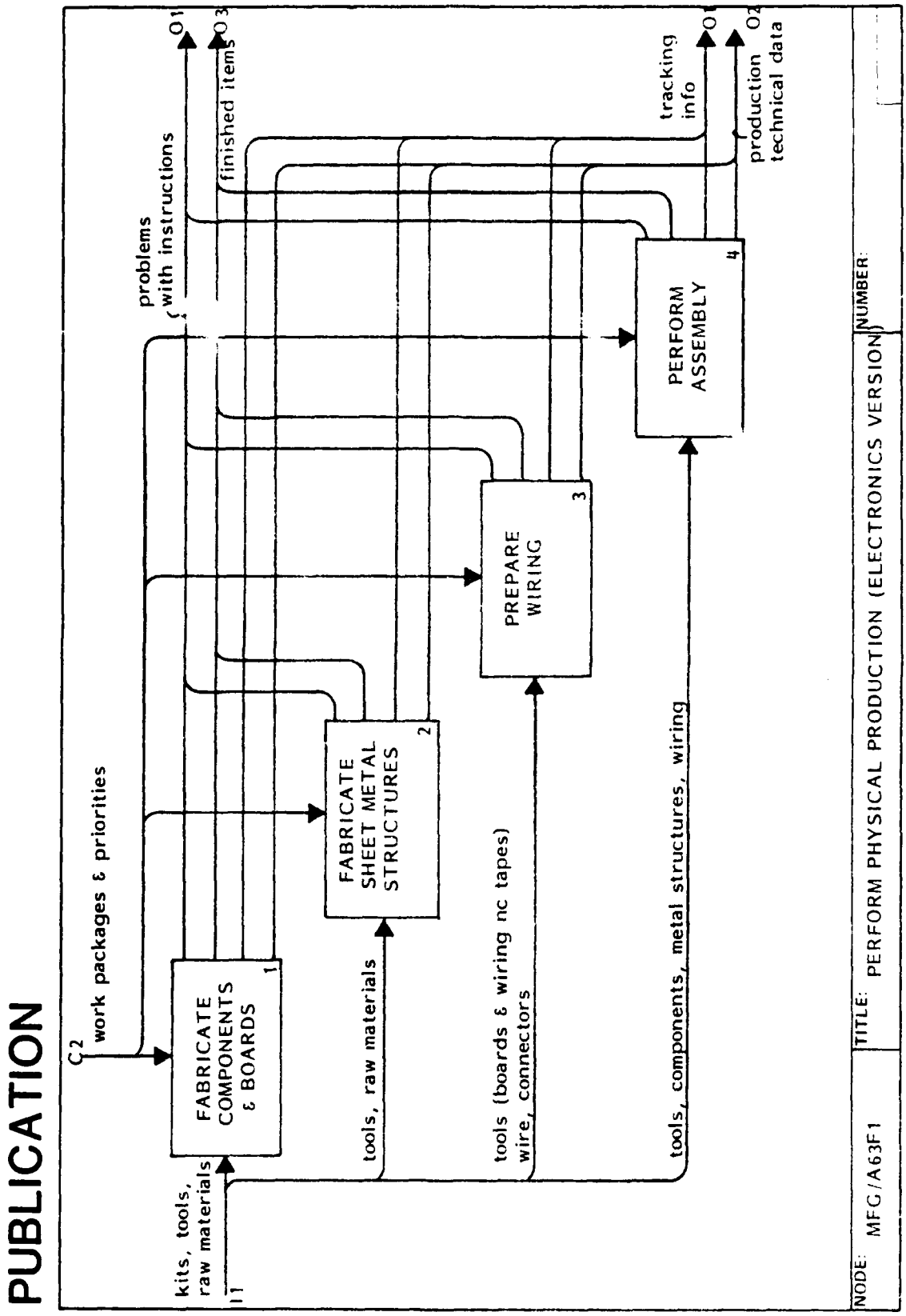
PUBLICATION
kits, tools, raw materials
I1
work packages & priorities
C2
FABRICATE COMPONENTS & BOARDS
1
tools, raw materials
FABRICATE SHEET METAL STRUCTURES
2
tools (boards & wiring nc tapes) wire, connectors
PREPARE WIRING
3
tools, components, metal structures, wiring
PERFORM ASSEMBLY
4
problems with instructions
O1
finished items
O3
tracking info
O1
production technical data
O2
NODE: MFG/A63F1
TITLE: PERFORM PHYSICAL PRODUCTION (ELECTRONICS VERSION)
NUMBER:

PUBLICATION

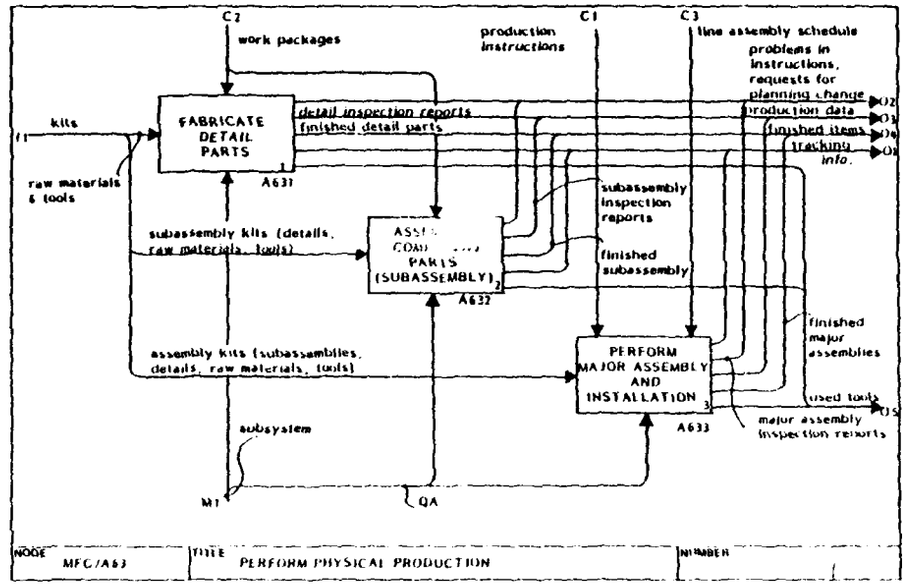

A631 Fabricate Detail Parts

The fabrication of detailed parts consists of converting raw material into acceptable finished items (i.e., items that conform to the work package description).

This diagram depicts the batch manufacture of details, showing how raw material is obtained, and passed through a number of fabrication processes controlled by fabrication instructions. The instructions will also call for inspection steps as the final operation in the manufacture of a detail.

If the parts, when inspected, are found not to conform with the work package description, they may be held for disposition or may be scrapped. If the parts are held for disposition, "engineering" will decide whether the parts can be accepted with a waiver, can be reworked or must be scrapped.

If part of a batch is held for disposition the work package will be split. This entails reducing the quantity to be produced by the original work package (this will travel with the accepted parts). An additional work package will be produced for the details that have been held.

PUBLICATION

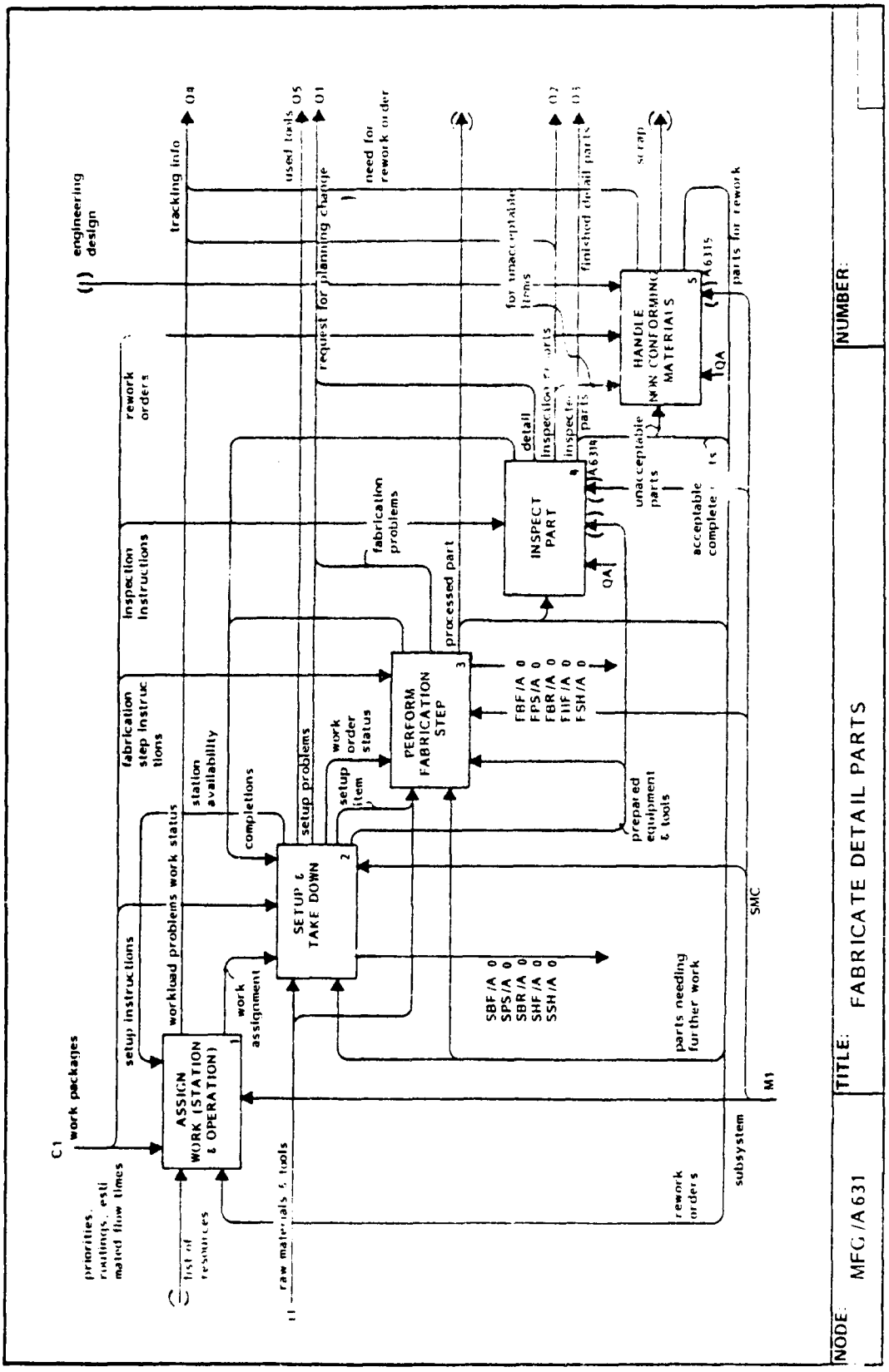

A6314 Inspect Part

Detail Parts are inspected to assure compliance with requirements. The parts are either accepted or declared non-conforming for subsequent MRB action. TI&E data is collected for analysis and potential corrective action.

PUBLICATION

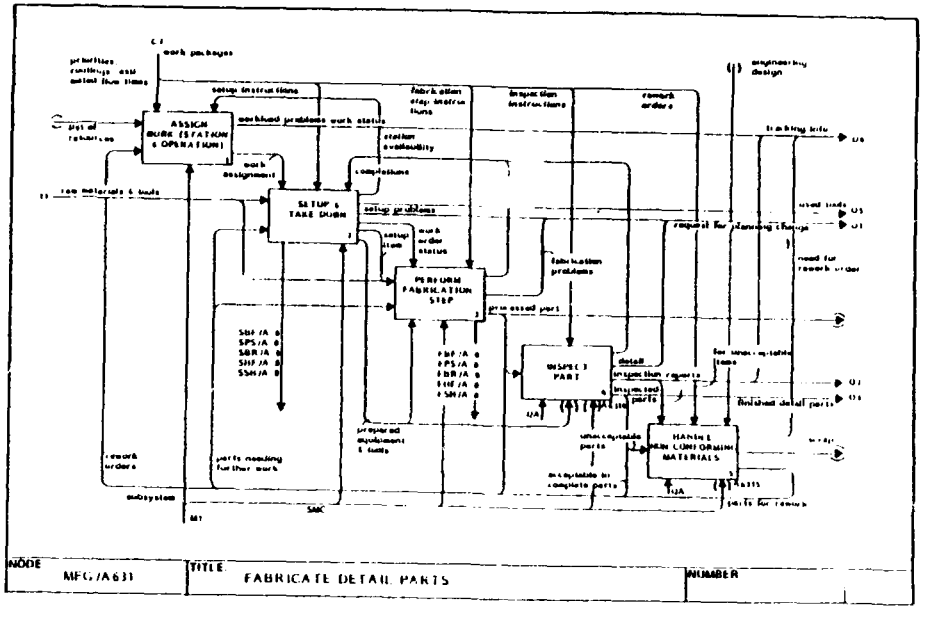

FTR110410000
8 September 1983

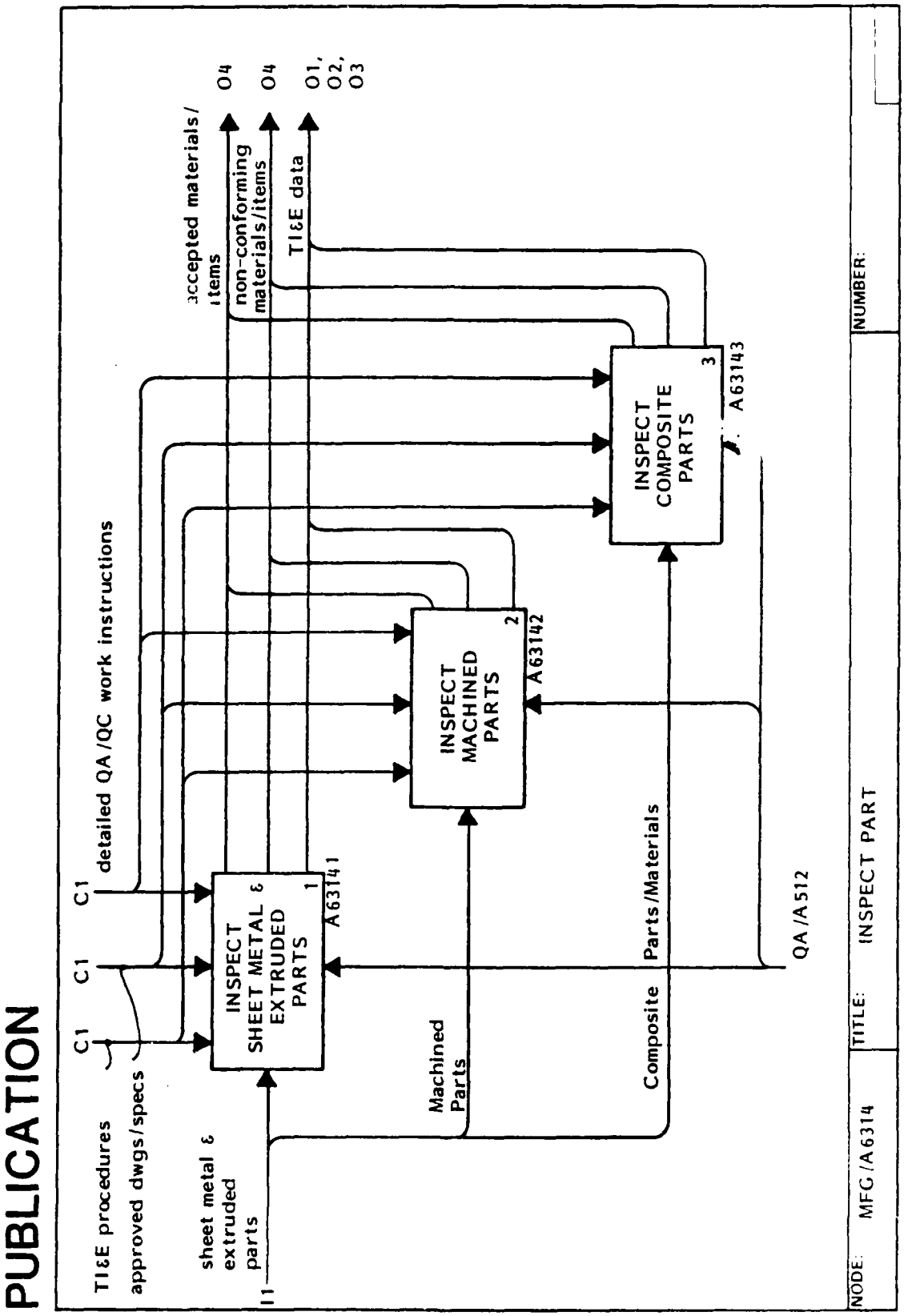
PUBLICATION
TI&E procedures
approved dwgs/specs
C1
C1
C1
detailed QA/QC work instructions
sheet metal & extruded parts
I1
INSPECT SHEET METAL & EXTRUDED PARTS
1
A63141
Machined Parts
INSPECT MACHINED PARTS
2
A63142
Composite
Parts/Materials
INSPECT COMPOSITE PARTS
3
A63143
QA/A512
accepted materials/items
O4
non-conforming materials/items
O4
TI&E data
O1, O2, O3
NODE:
MFG/A6314
TITLE:
INSPECT PART
NUMBER:

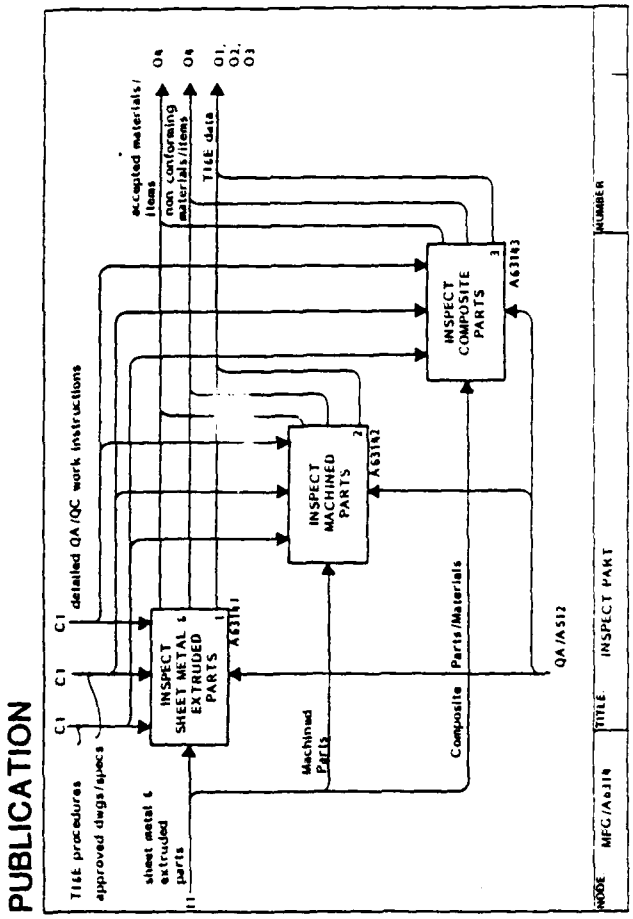

A63141 Inspect Sheet Metal and Extruded Parts

PUBLICATION

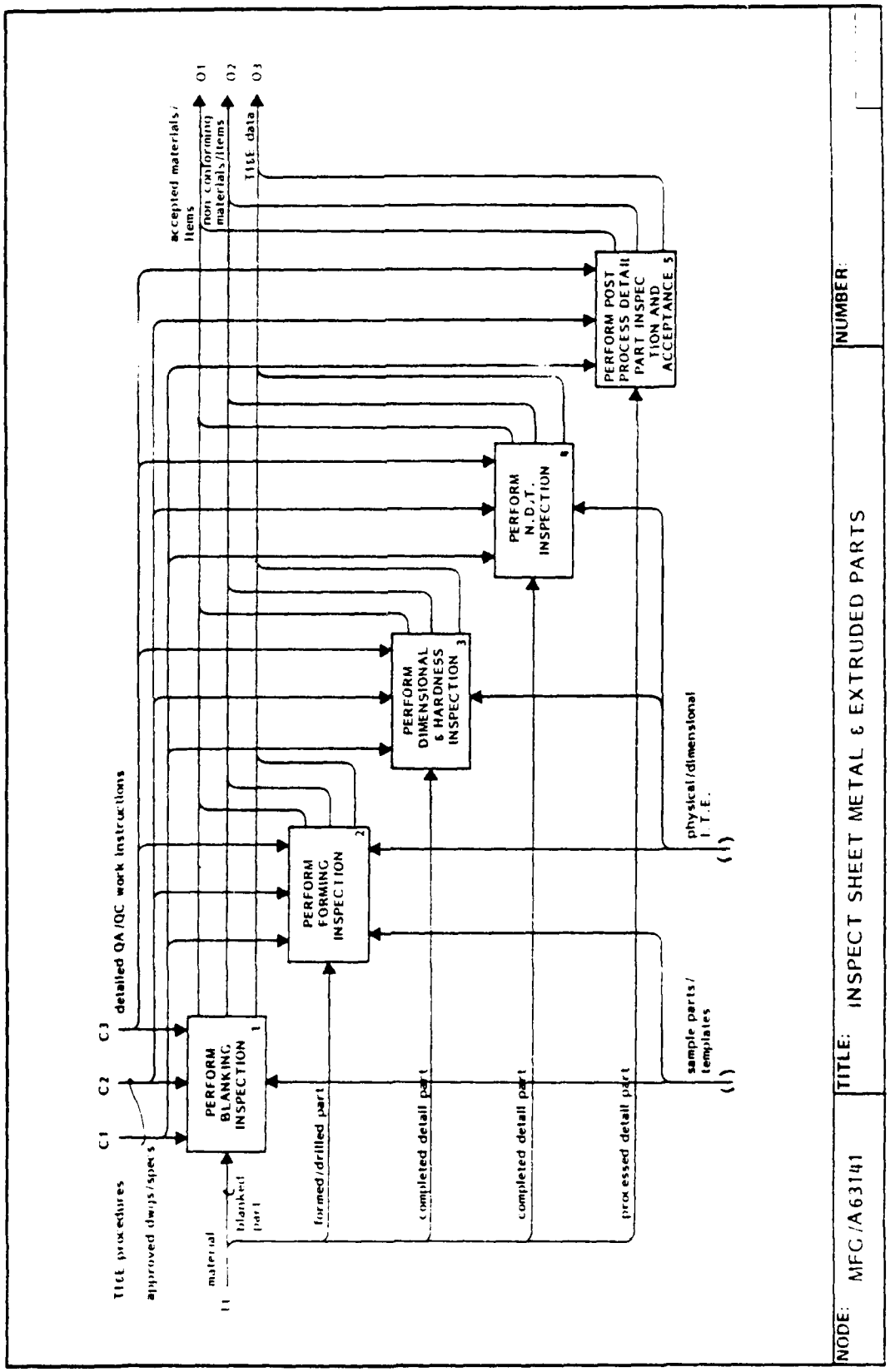

A63142 Inspect Machined Parts

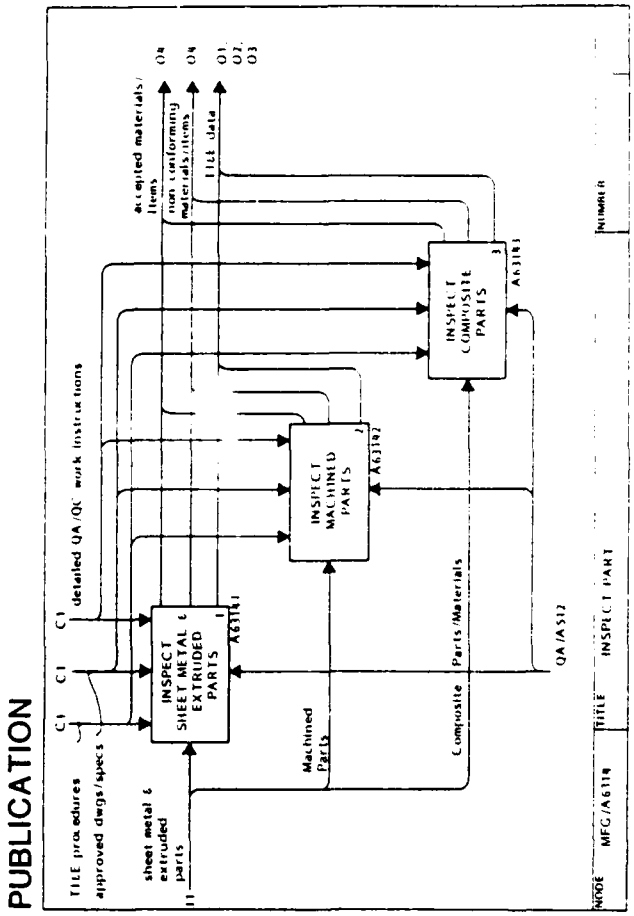

PUBLICATION

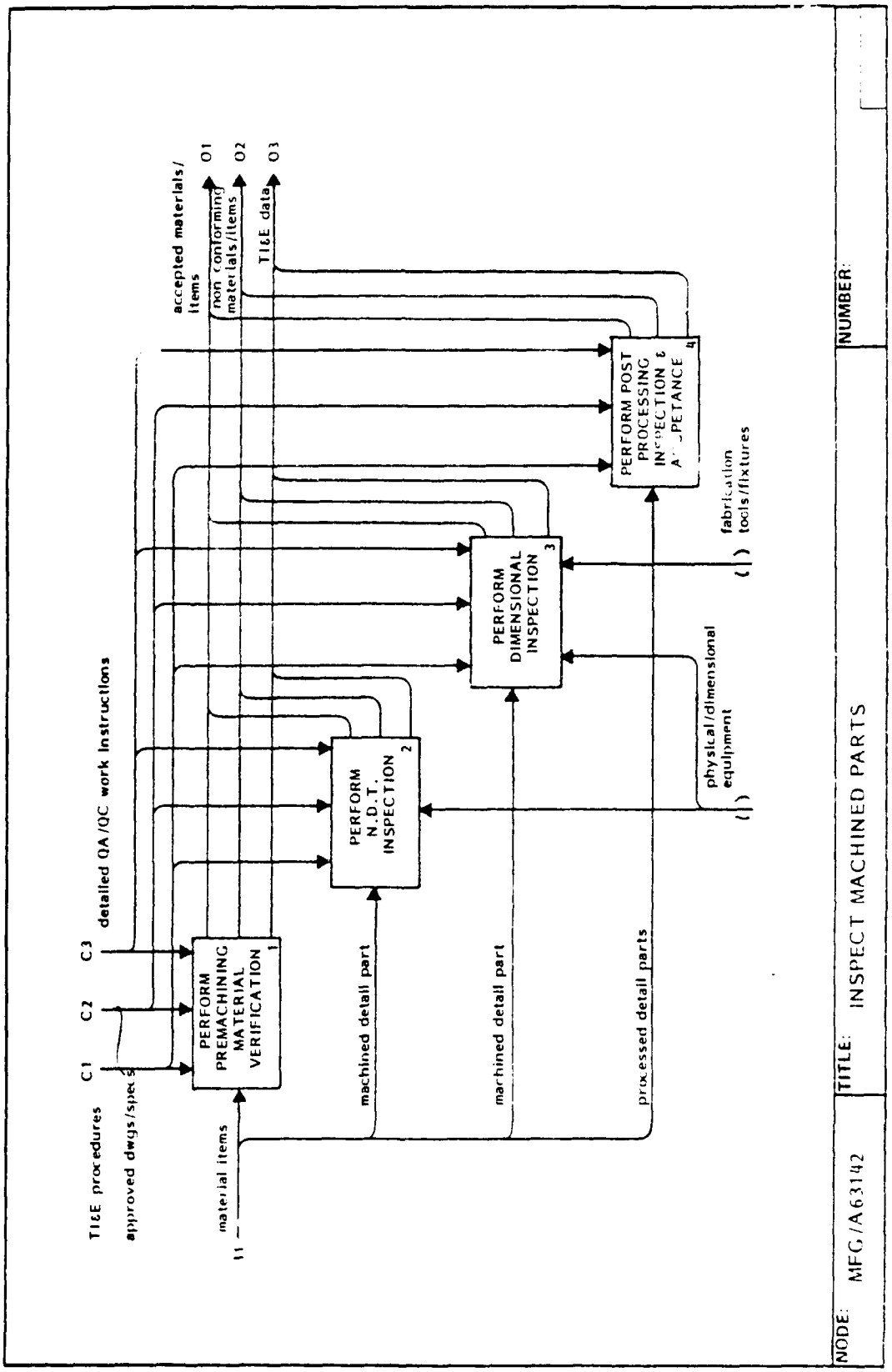

A63143 Inspect Composite Parts

PUBLICATION

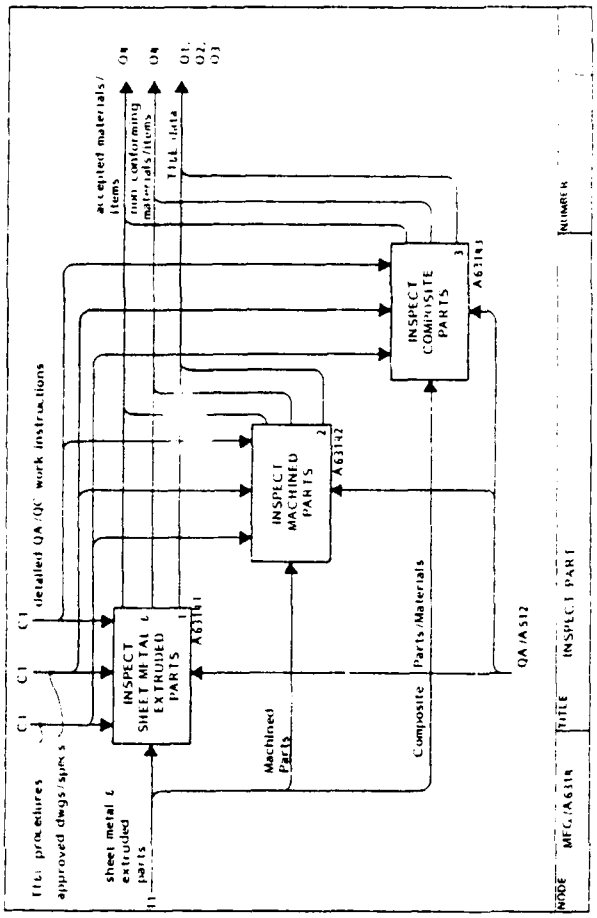

PUBLICATION

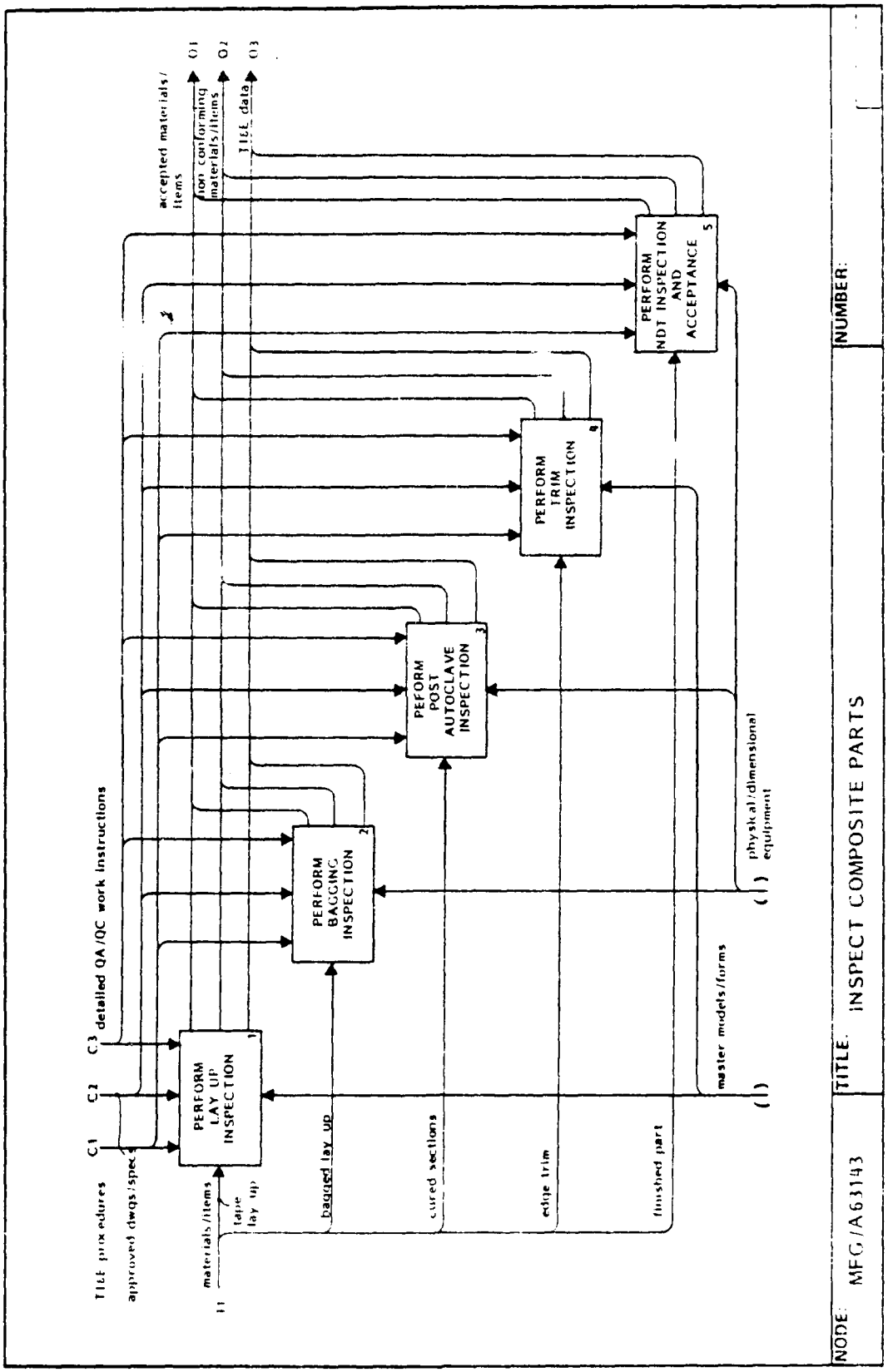

A6315 Handle Non-Conforming Material

PUBLICATION

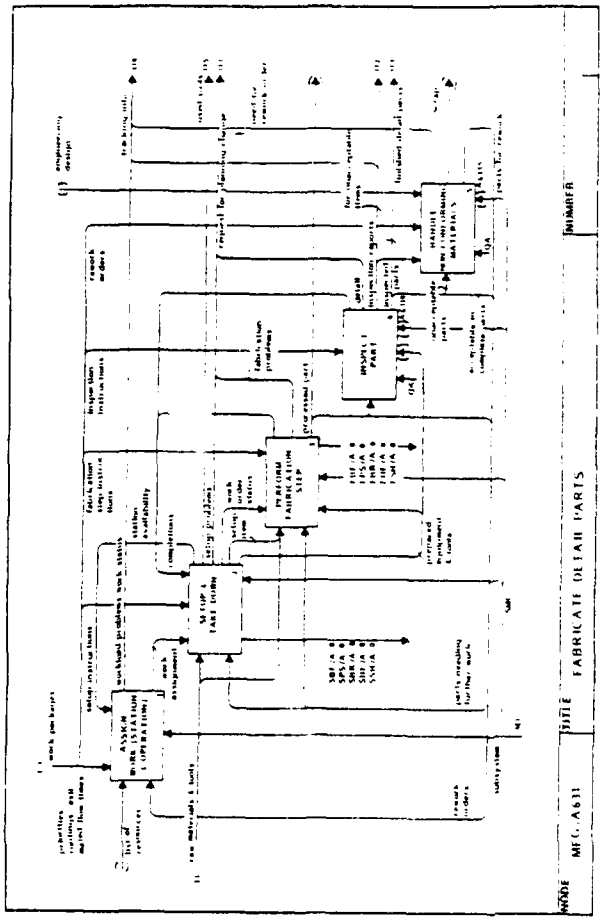

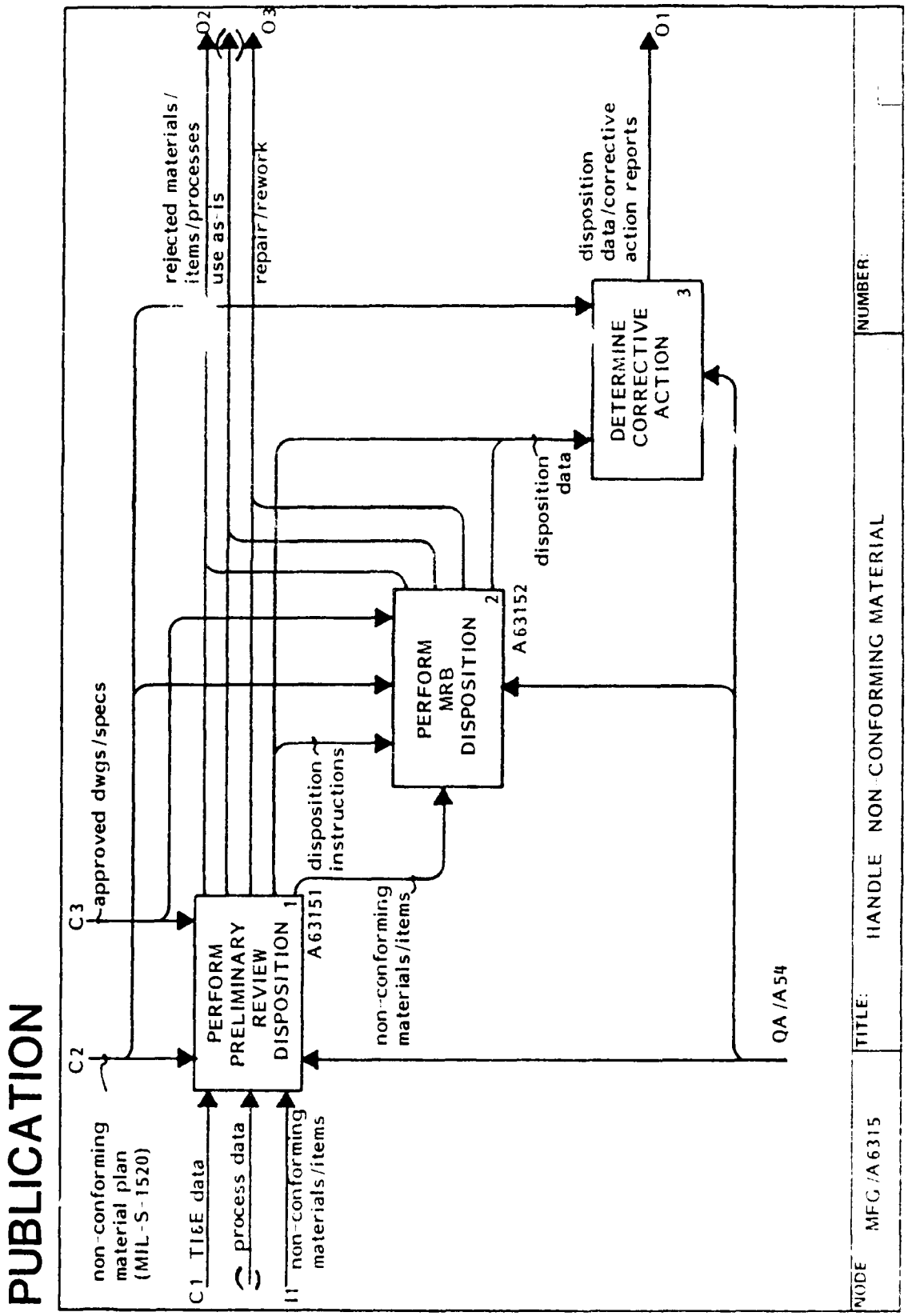
PUBLICATION
non-conforming material plan (MIL-S-1520)
C1 TI&E data
process data
I1 non-conforming materials/items
C2
C3 approved dwgs/specs
PERFORM PRELIMINARY REVIEW DISPOSITION 1
A63151
disposition instructions
non-conforming materials/items
PERFORM MRB DISPOSITION 2
A63152
disposition data
DETERMINE CORRECTIVE ACTION 3
rejected materials/ items/processes
use as is
repair/rework
O2
O3
disposition data/corrective action reports
O1
QA/A54
NODE
MFG/A6315
TITLE:
HANDLE NON CONFORMING MATERIAL
NUMBER:

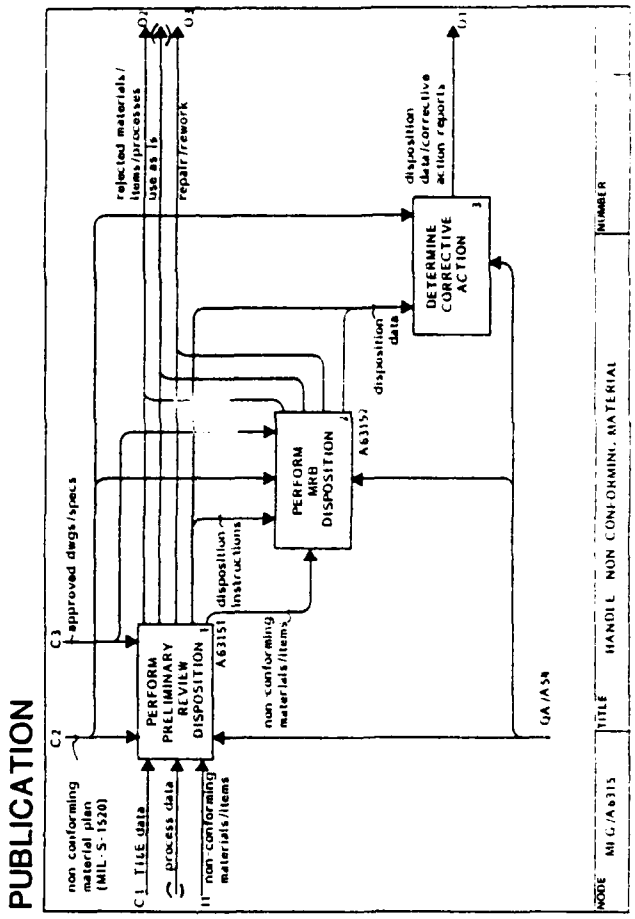

A63151 Perform Preliminary Review Disposition

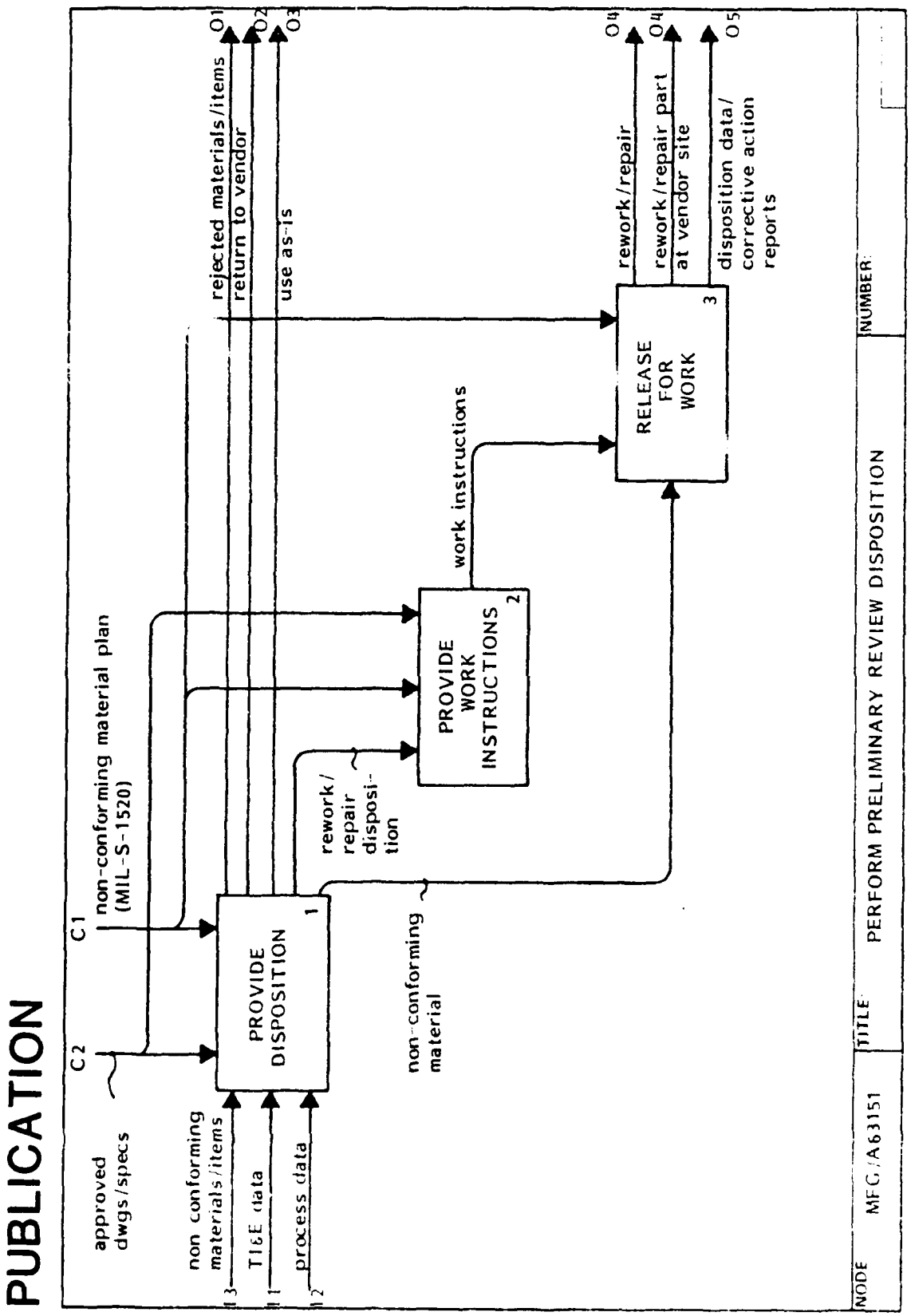
PUBLICATION
approved dwgs/specs
C2
non conforming materials/items
I3
T1&E data
I1
process data
I2
C1
non-conforming material plan (MIL-S-1520)
PROVIDE DISPOSITION
1
rejected materials/items
return to vendor
use as-is
O1
O2
O3
non-conforming material
rework/repair disposition
PROVIDE WORK INSTRUCTIONS
2
work instructions
RELEASE FOR WORK
3
rework/repair
rework/repair part at vendor site
disposition data/ corrective action reports
O4
O4
O5
NODE
MFG/A63151
TITLE
PERFORM PRELIMINARY REVIEW DISPOSITION
NUMBER

A63152 Perform MRB Disposition

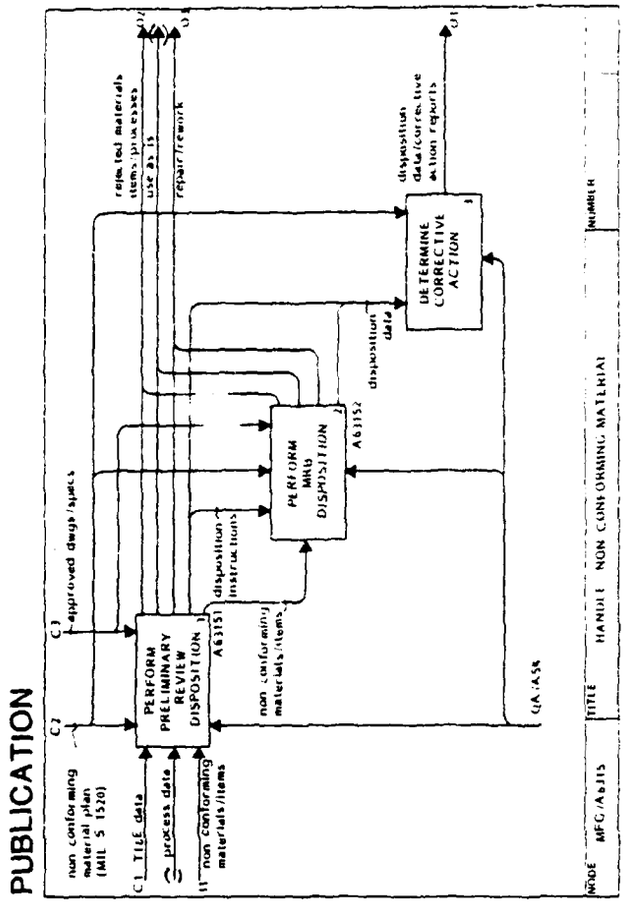

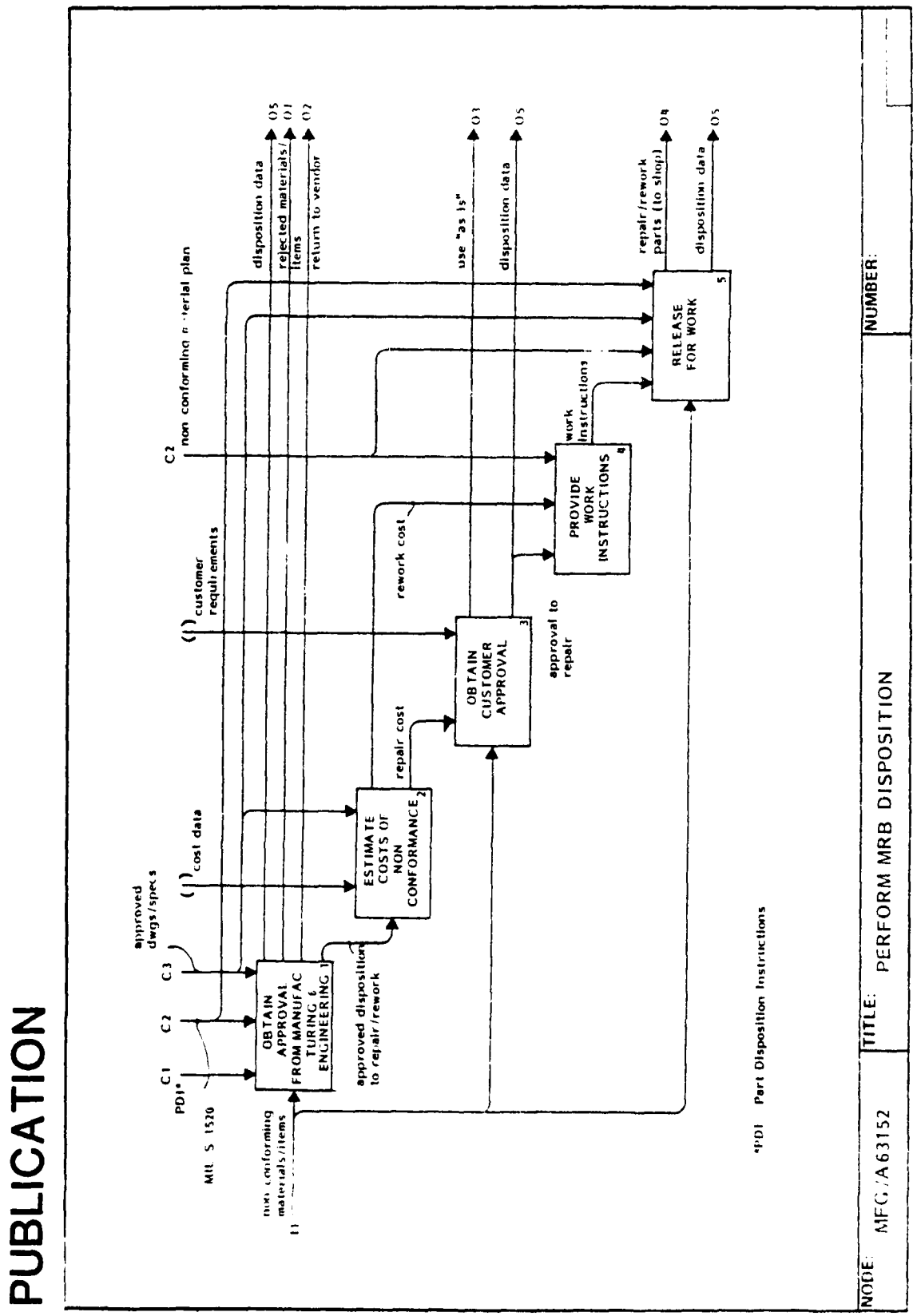
PUBLICATION
NODE: MFG/A63152
TITLE: PERFORM MRB DISPOSITION
NUMBER:
C1
C2
C3
PDI*
MIL S 1520
approved dwgs/specs
(1) cost data
(1) customer requirements
C2 non conforming material plan
non conforming materials/items
OBTAIN APPROVAL FROM MANUFACTURING & ENGINEERING 1
ESTIMATE COSTS OF NON CONFORMANCE 2
OBTAIN CUSTOMER APPROVAL 3
PROVIDE WORK INSTRUCTIONS 4
RELEASE FOR WORK 5
approved disposition to repair/rework
repair cost
rework cost
approval to repair
work instructions
disposition data
rejected materials/items
return to vendor
use "as is"
repair/rework parts (to shop)
*PDI Part Disposition Instructions

A632 Assemble Component Parts (Sub-Assembly)

"Assemble Component Parts" consists of making a number of assemblies from kitted items in a batch mode. The kitted items may comprise purchased items, fabricated details, and/or sub-assemblies.

In the same manner as the fabrication of detail parts the building up of an assembly is achieved by completing an entire batch on one step prior to passing on to the next. The sequence of these operations is controlled by the work package instructions.

The instructions will also call for inspection as intermediate steps and/or as the final operation as in the manufacture of a detail.

If the parts, when inspected, are found not to conform with the work package description they may be scrapped or held for disposition. If the parts are held for disposition, "Engineering" will decide whether the parts can be accepted with a waiver, can be reworked, or must be scrapped.

If part of a batch is held for disposition the work package will be split. This entails reducing the quantities to be produced by the original work package (this will travel with the accepted parts). An additional work package will be produced for the assemblies that have been held.

PUBLICATION

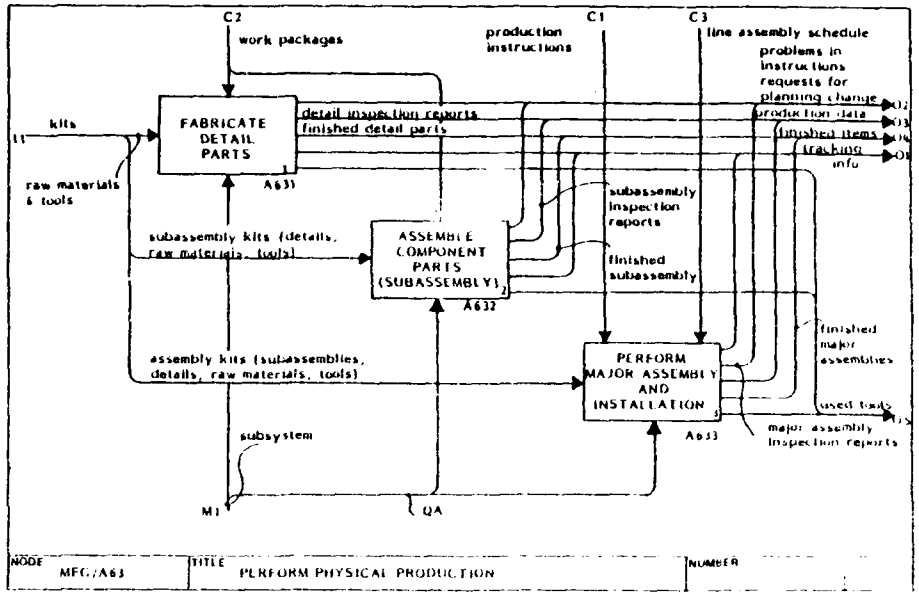

PUBLICATION

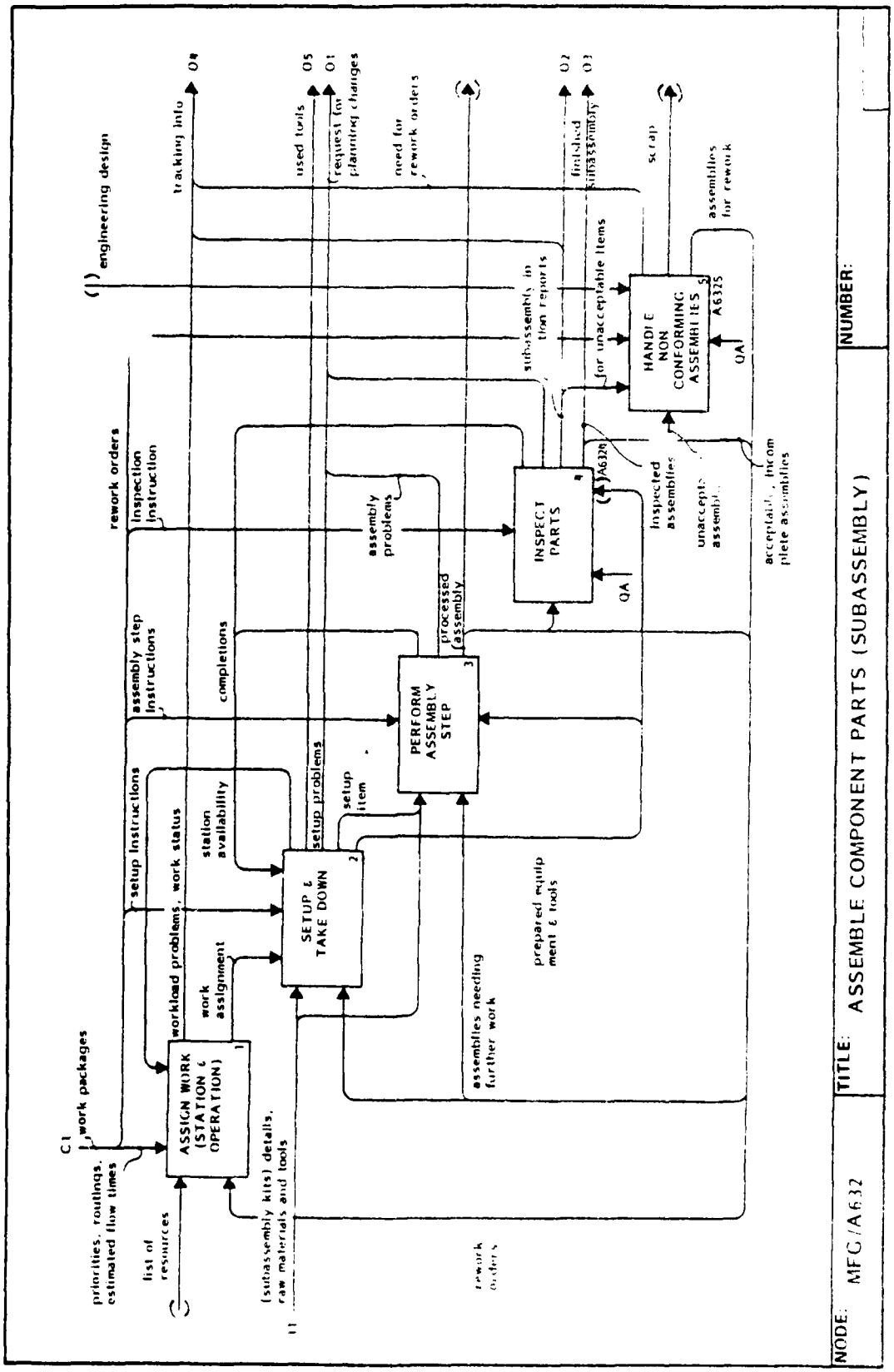

A6324 Inspect Part

Subassemblies are inspected to assure compliance with requirements. The subassemblies are either accepted or declared nonconforming for subsequent MRB action. TI&E data is collected for analysis and potential corrective action.

PUBLICATION

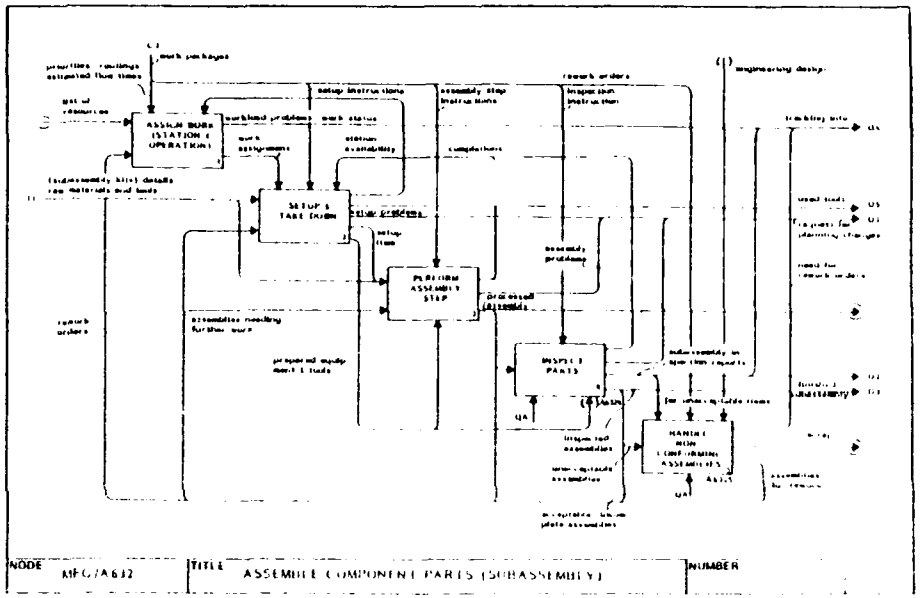

PUBLICATION

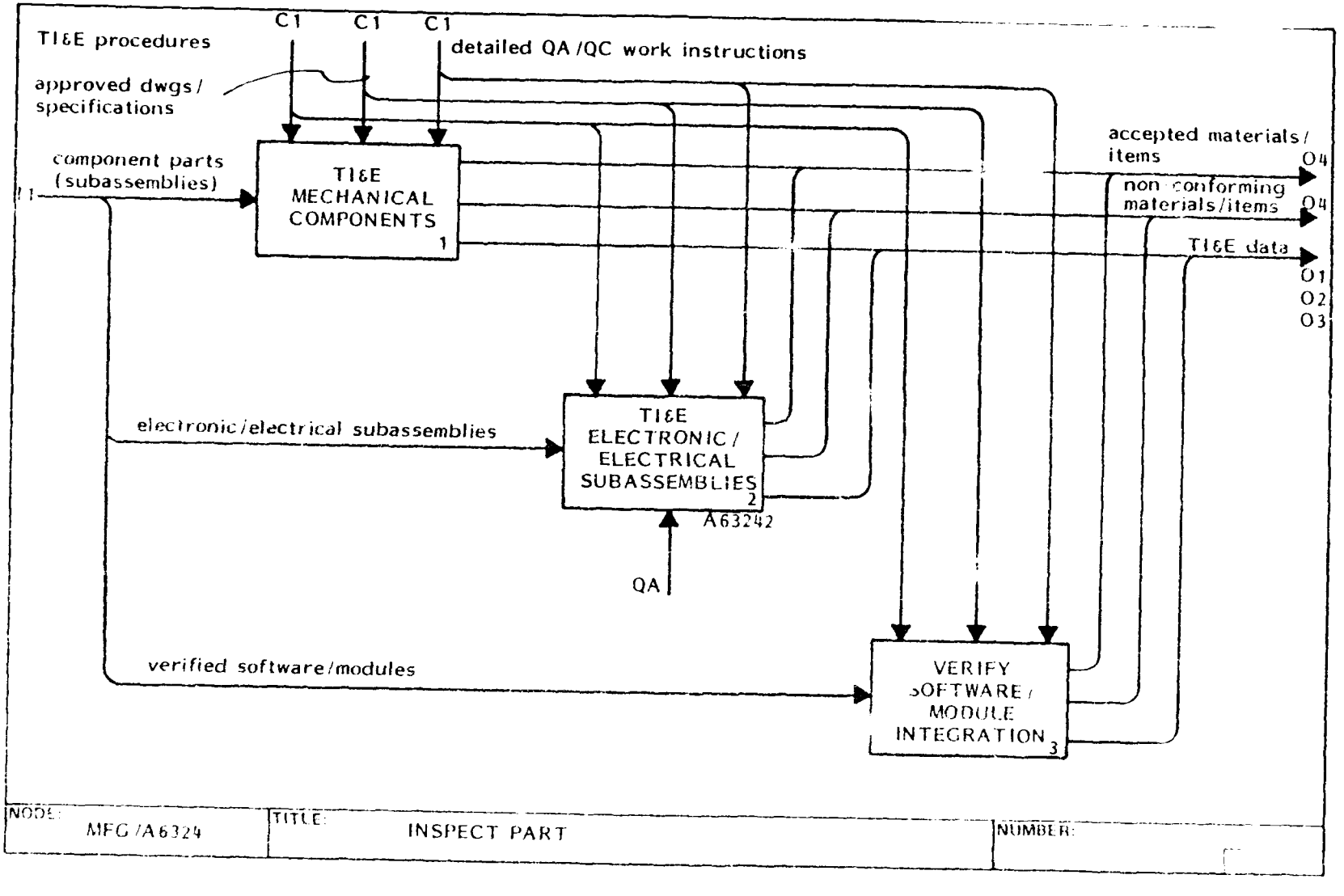

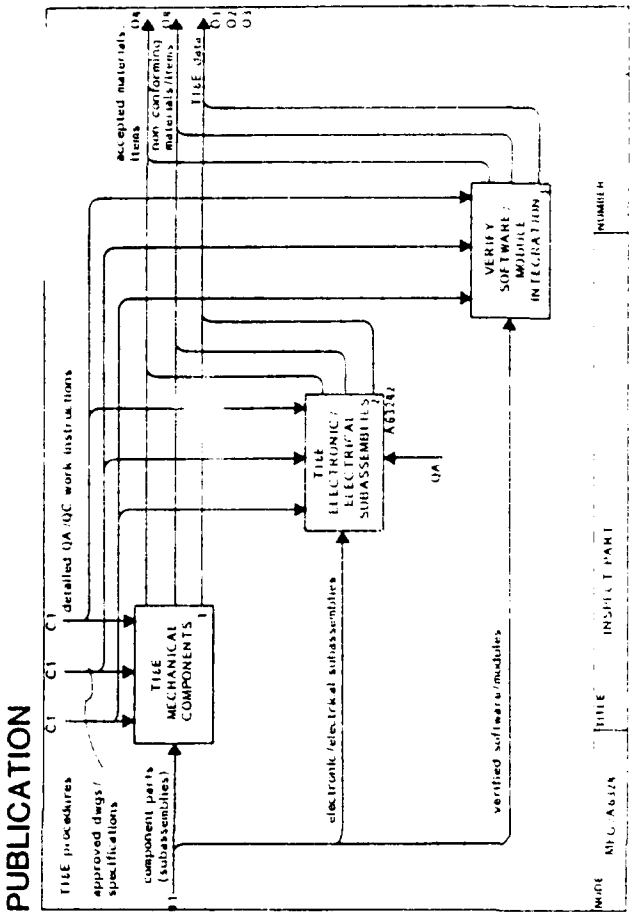

A63242 TI&E Electronic/
Electrical Subassemblies

PUBLICATION

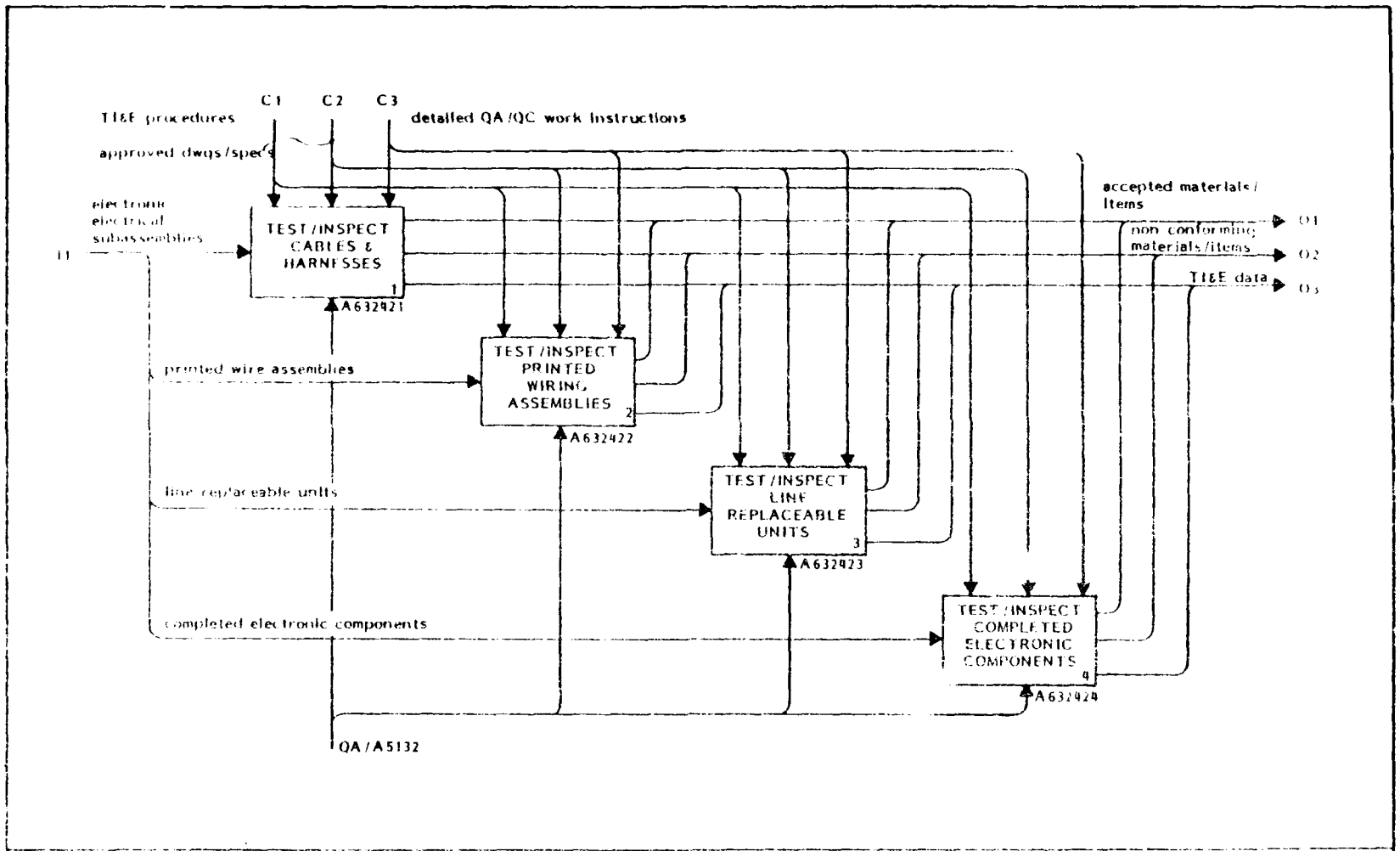

NODE	TITLE	NUMBER
MFG. A63242	T1&E ELECTRONIC/ELECTRICAL SUBASSEMBLIES	

A632421 Test/Inspect Cables and Harnesses

PUBLICATION

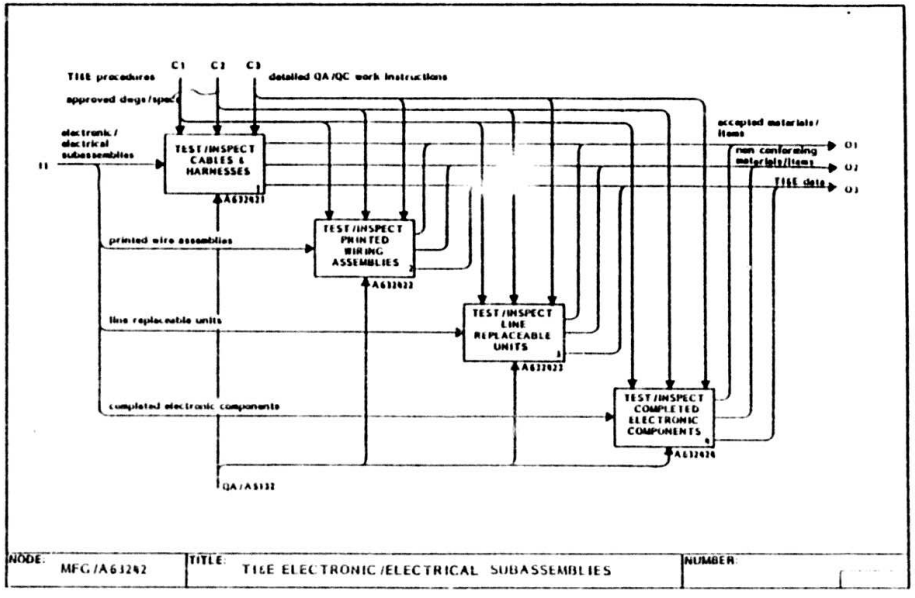

PUBLICATION

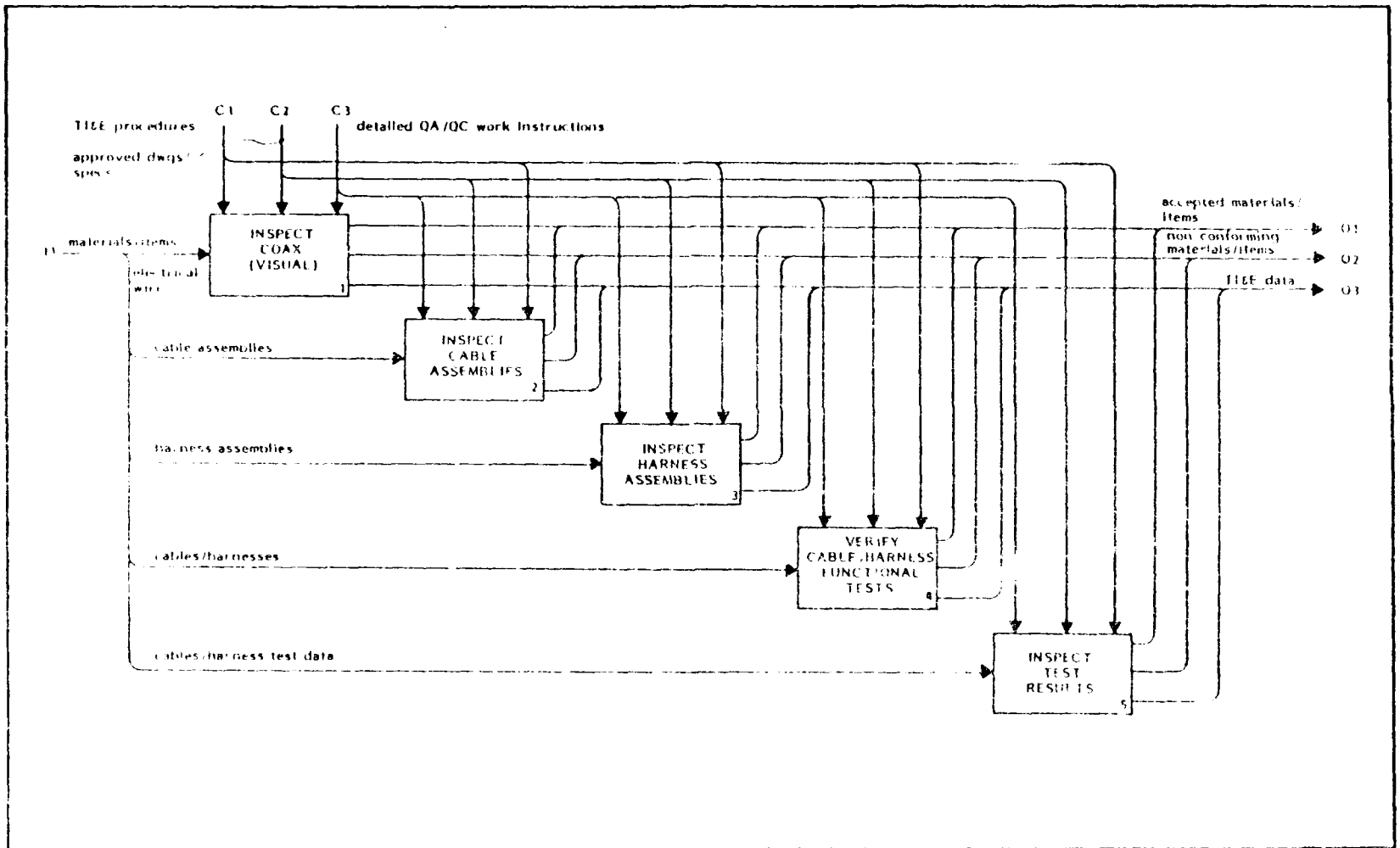

NODE	TITLE	NUMBER
MFG/A632421	TEST/INSPECT CABLES & HARNESSES	

A632422 Test/Inspect Printed Wiring Assemblies

PUBLICATION

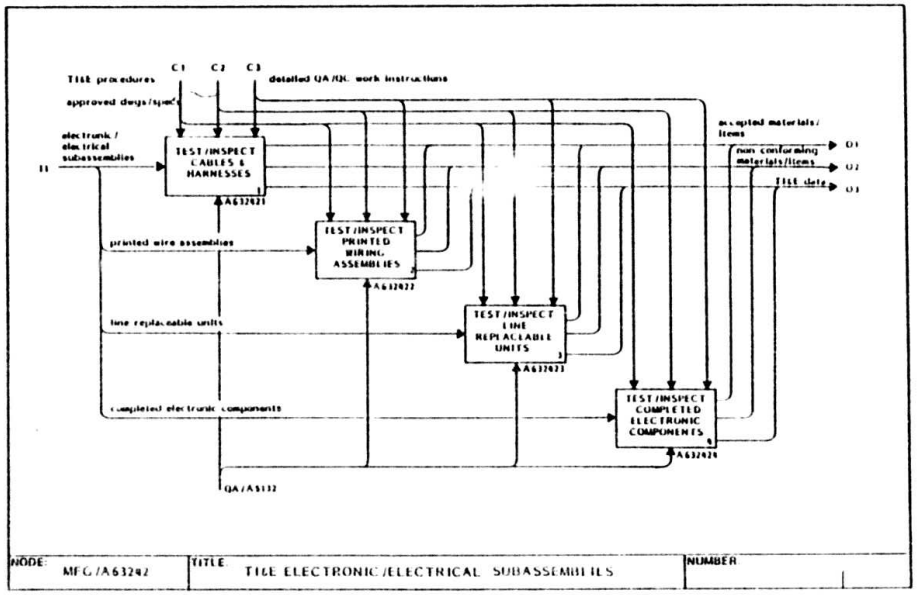

PUBLICATION

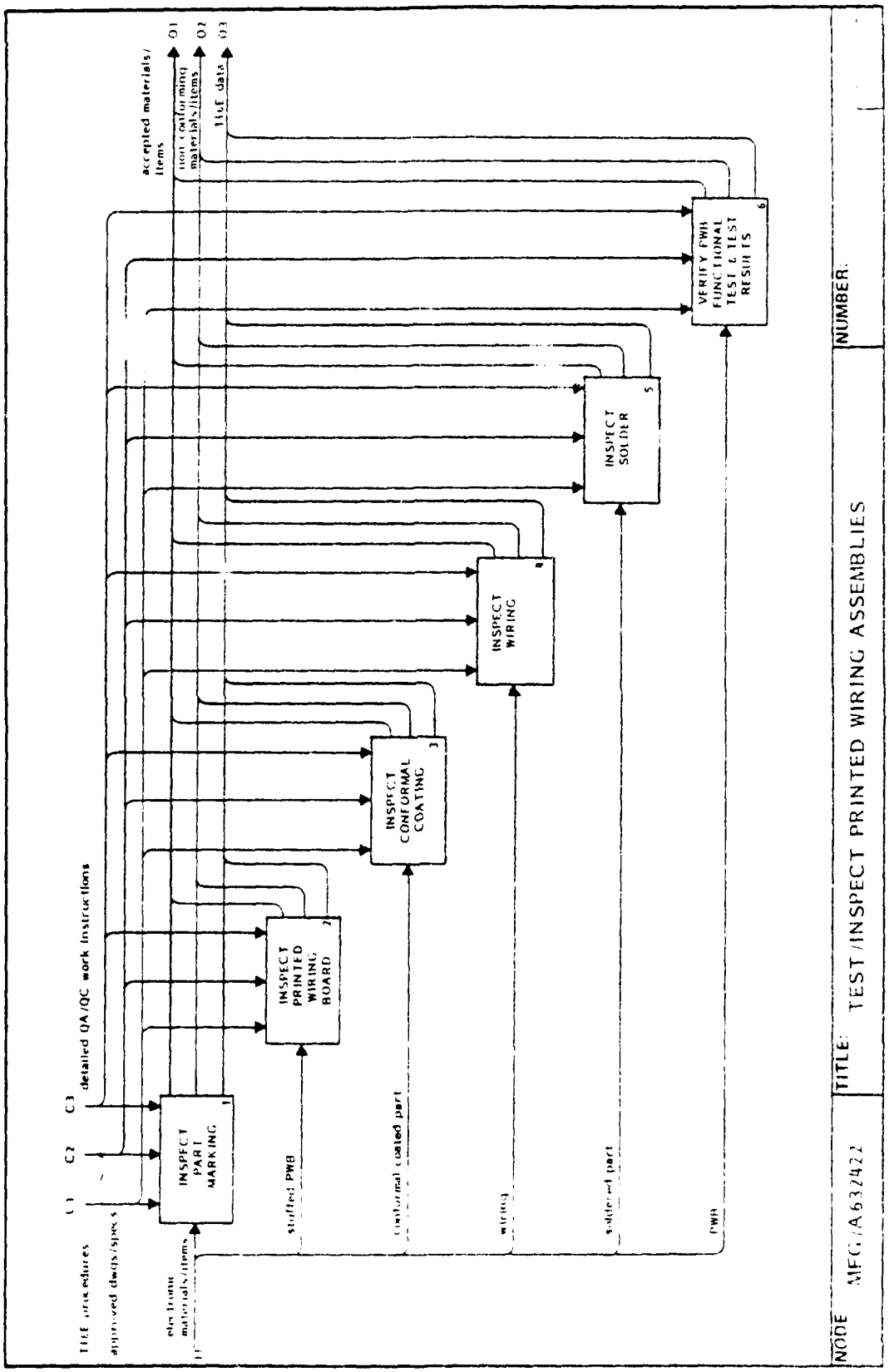

A632423 Test/Inspect Line Replaceable Units (LRU's)

PUBLICATION

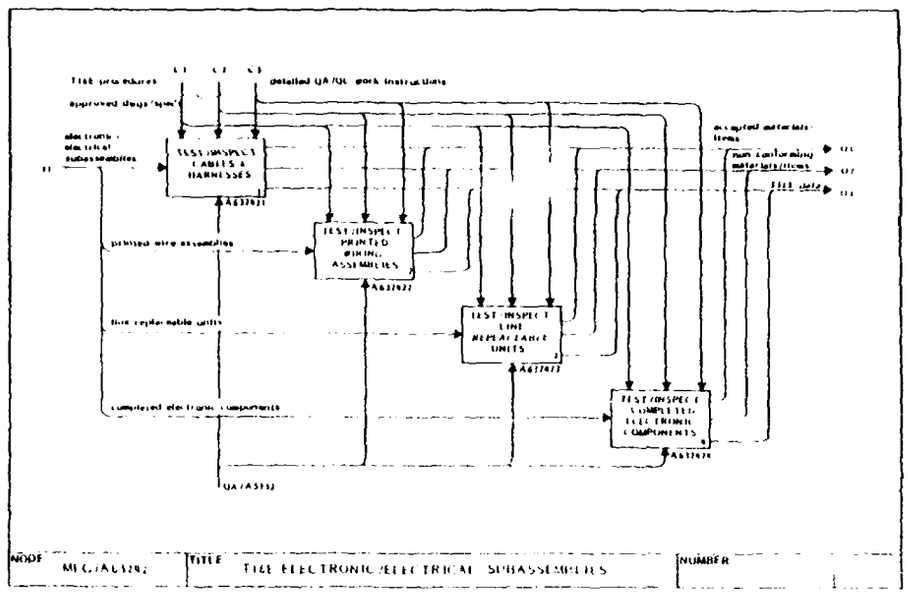

PUBLICATION

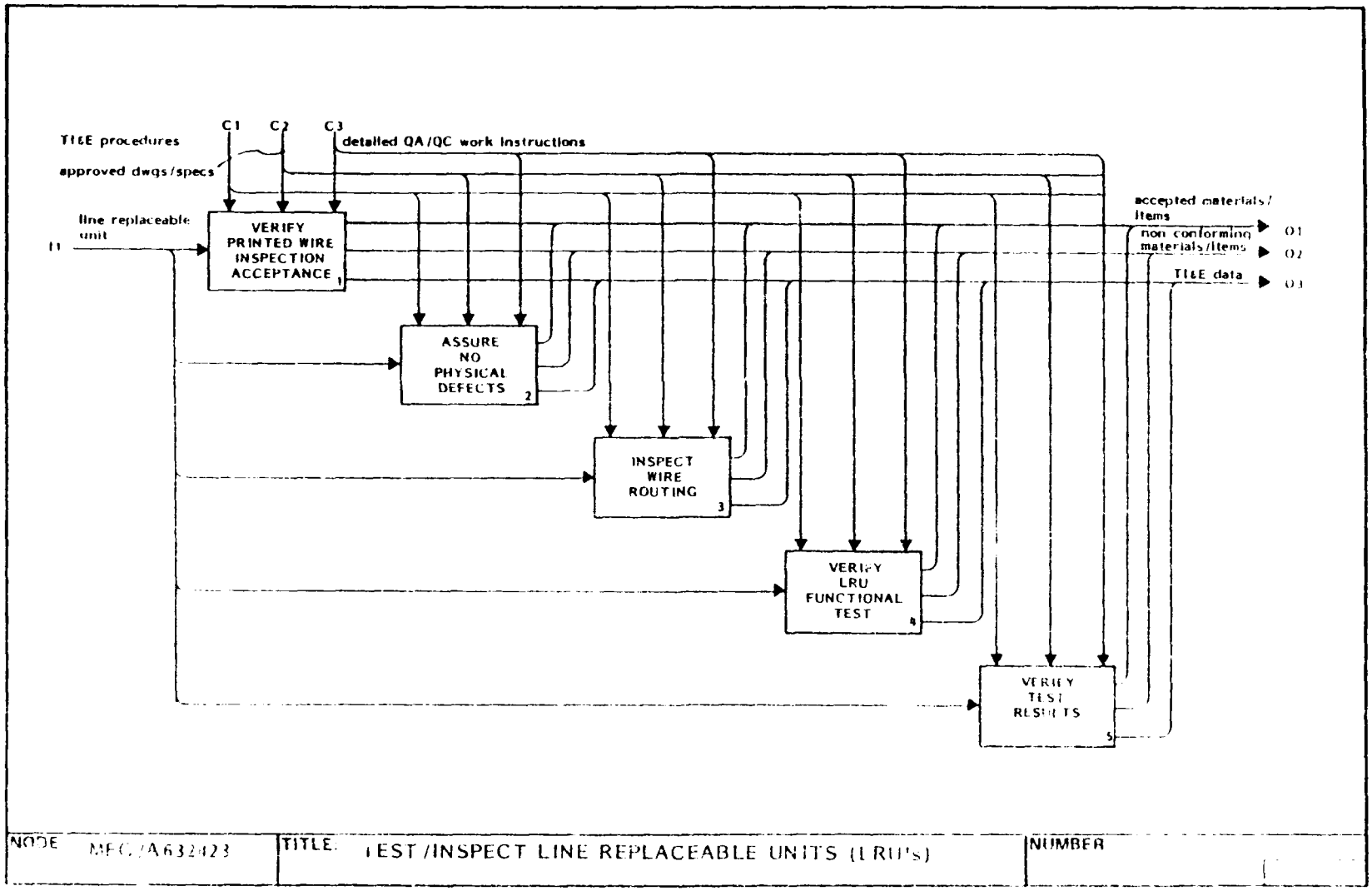

NODE MFC/A632423	TITLE: TEST/INSPECT LINE REPLACEABLE UNITS (LRU's)	NUMBER

A632424 Test/Inspect Completed Electronic Components (Subassemblies)

PUBLICATION

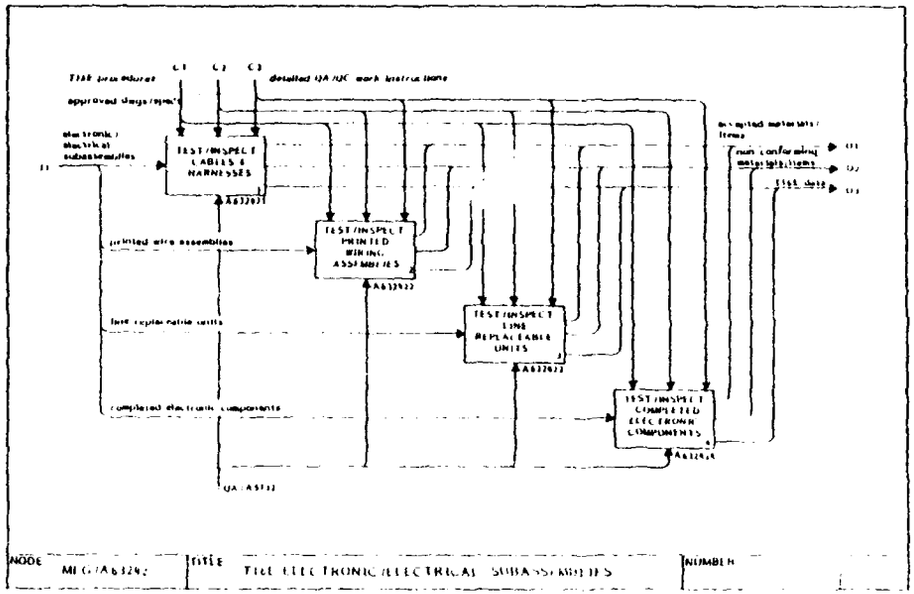

PUBLICATION

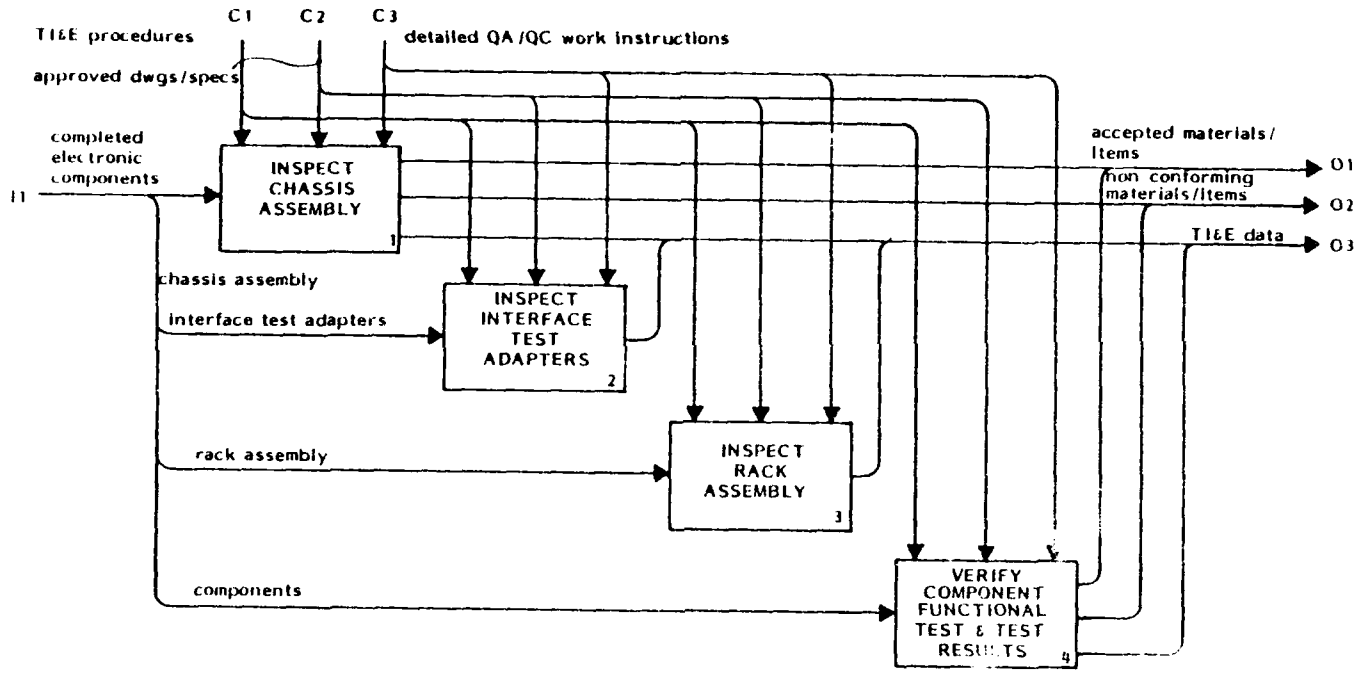

NODE	TITLE:	NUMBER:
MFG/A632424	TEST/INSPECT COMPLETED ELECTRONIC COMPONENTS (SUBASSEMBLIES)	

A6325 Handle Non-Conforming Assemblies

PUBLICATION

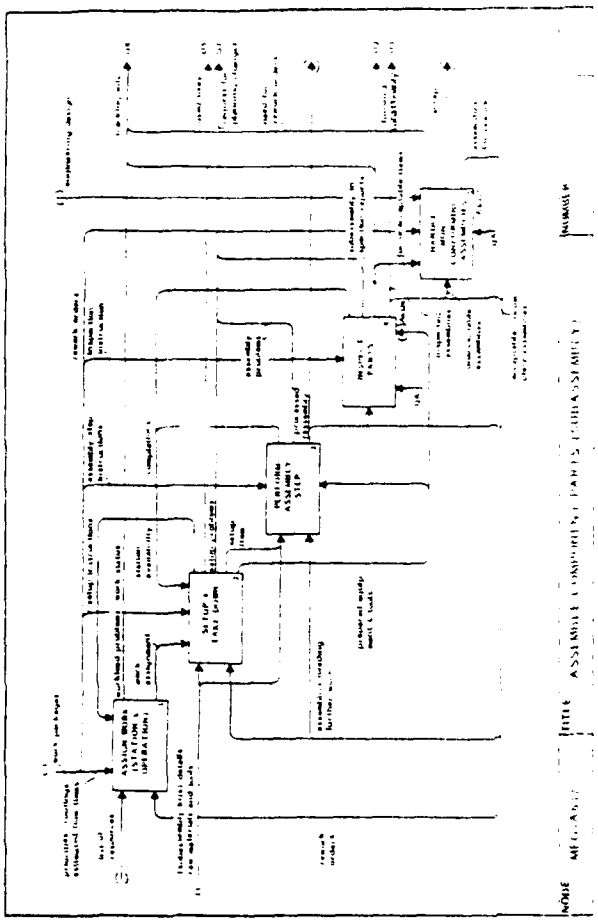

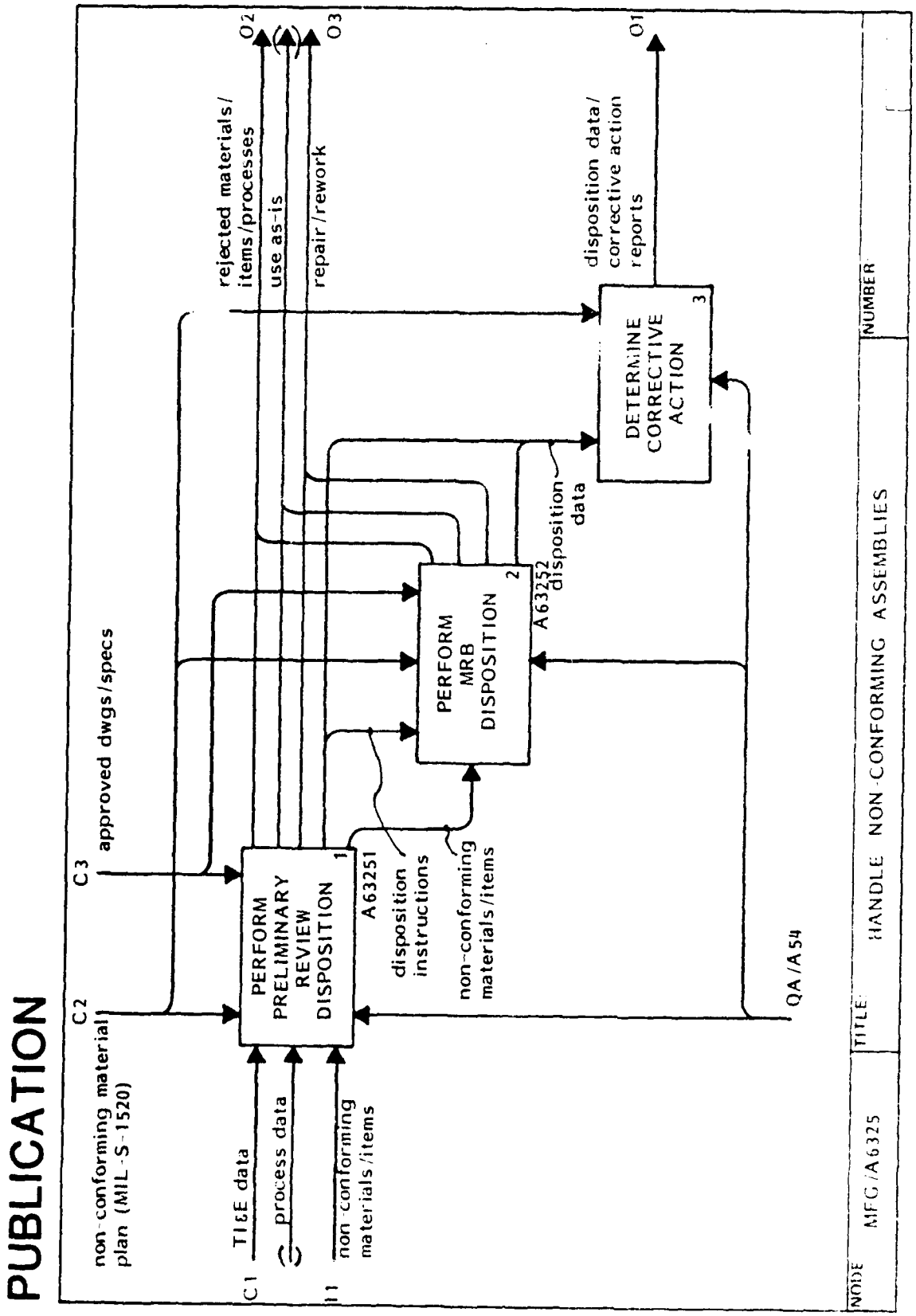
PUBLICATION
non-conforming material plan (MIL-S-1520)
C1
TI&E data
process data
I1
non-conforming materials/items
C2
C3
approved dwgs/specs
PERFORM PRELIMINARY REVIEW DISPOSITION
1
A63251
disposition instructions
non-conforming materials/items
PERFORM MRB DISPOSITION
2
A63252
disposition data
DETERMINE CORRECTIVE ACTION
3
rejected materials/ items/processes
use as-is
repair/rework
O2
O3
disposition data/ corrective action reports
O1
QA/A54
NODE
MFG/A6325
TITLE
HANDLE NON-CONFORMING ASSEMBLIES
NUMBER

A63251 Perform Preliminary Review Disposition

PUBLICATION

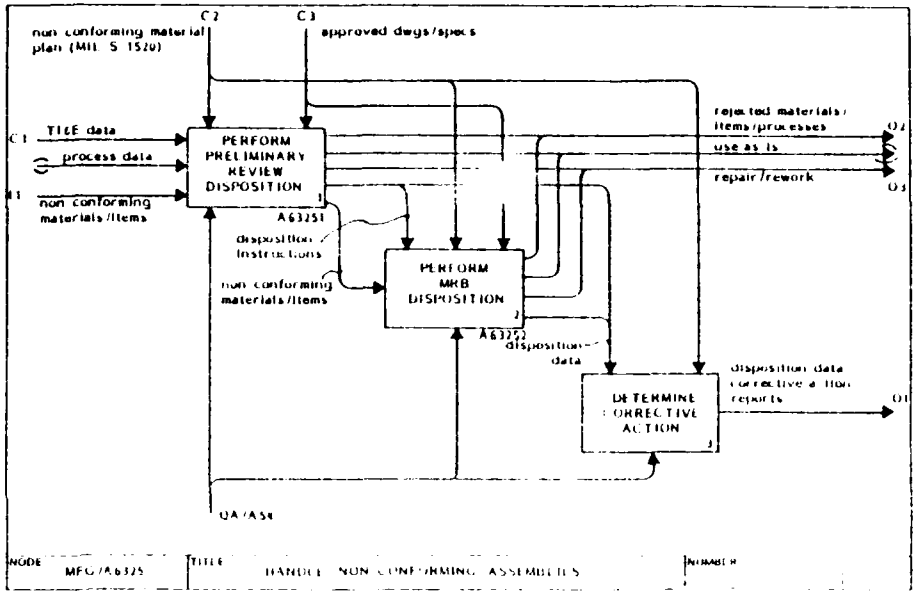

PUBLICATION

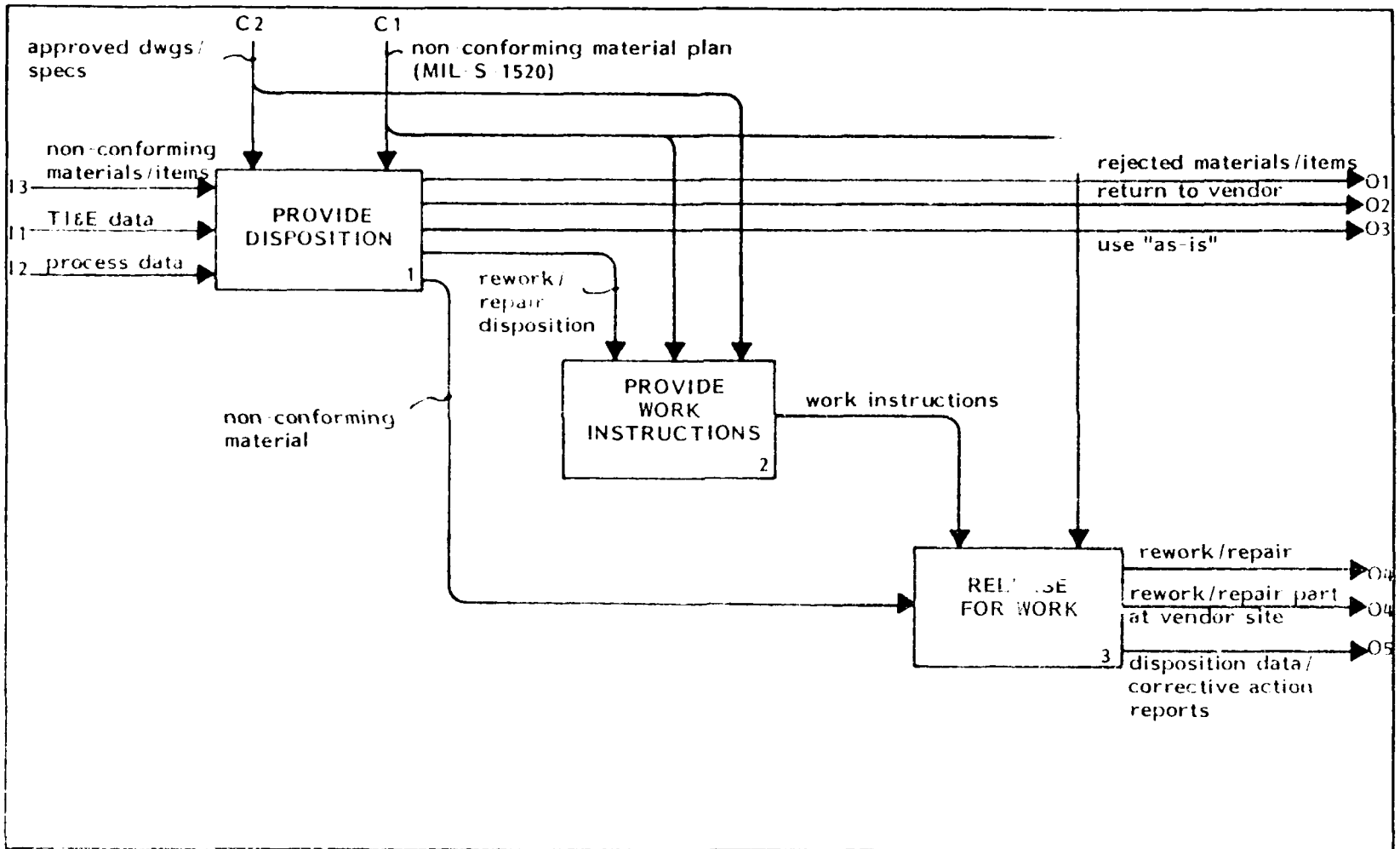

NODE	TITLE	NUMBER
MFG/A63251	PERFORM PRELIMINARY REVIEW DISPOSITION	

A63252 Perform MRB Disposition

PUBLICATION

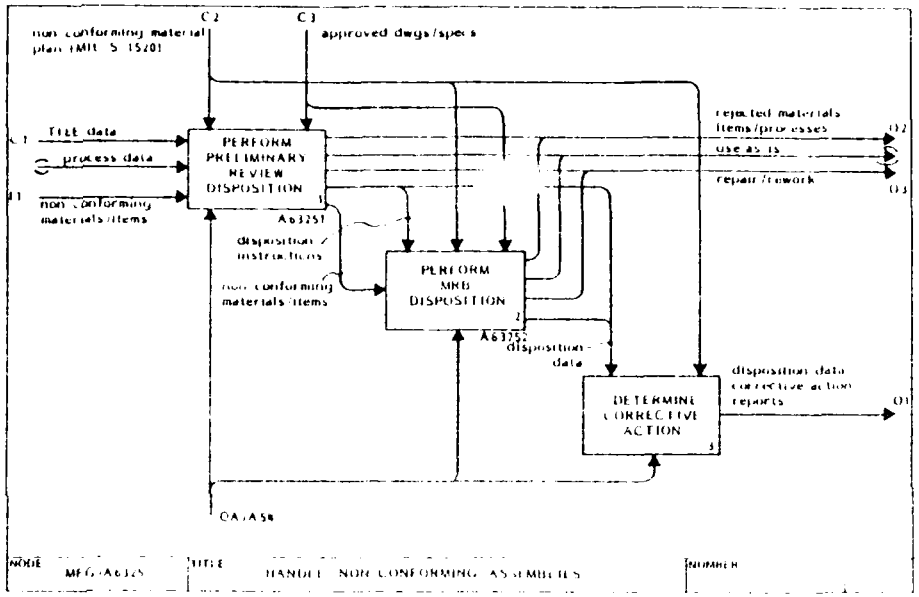

PUBLICATION

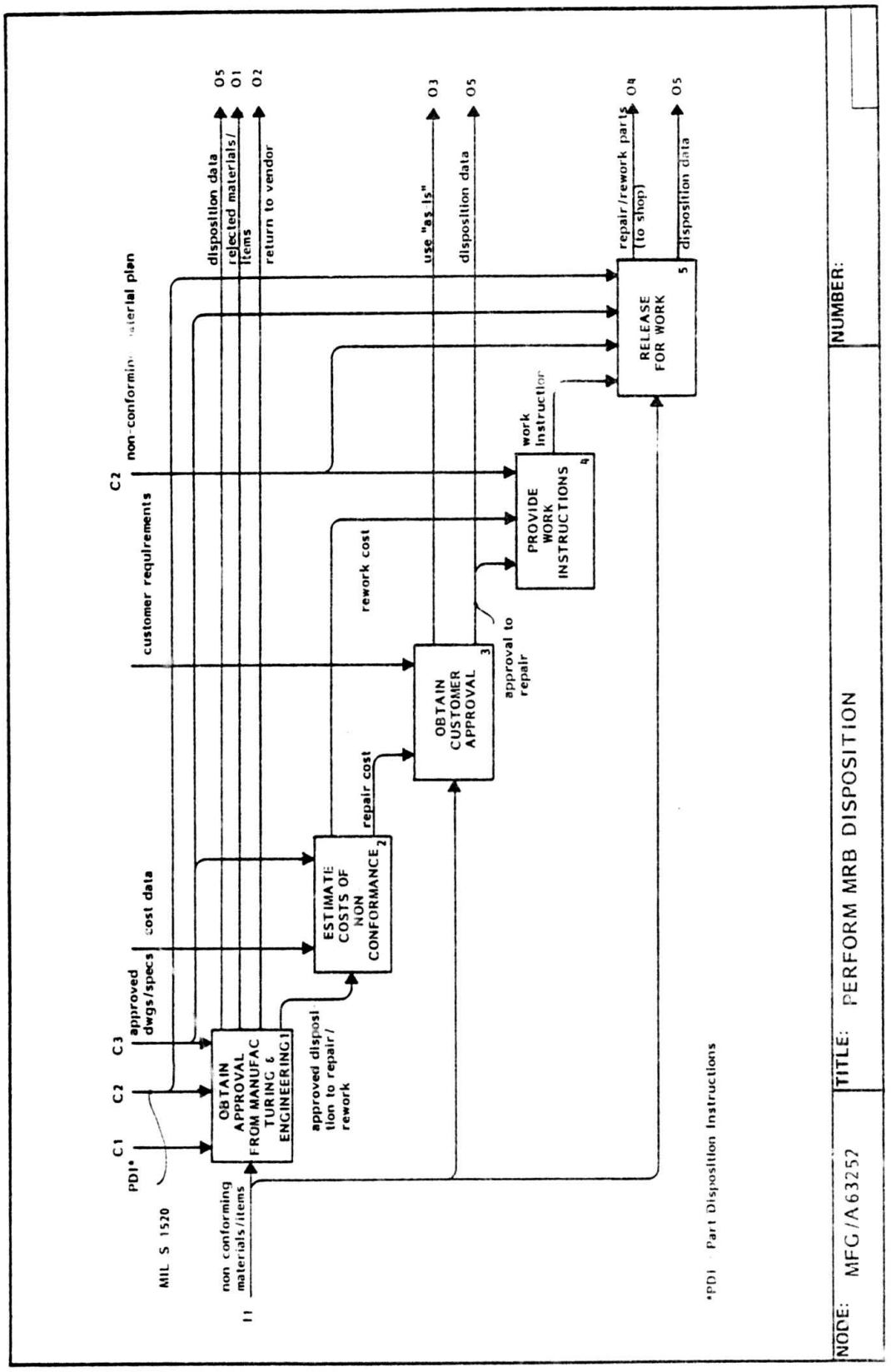

A633 Perform Major Assembly and Installation

The "Perform Major Assembly and Installation" activity is different from the "Assemble Minor Assemblies" in that they are not produced in batches but are produced and controlled as unit items. One of the more visible differences between the two types of assemblies is that in this type of assembly the work package does not travel with the assembly, instead instructions and information are provided at the appropriate work station as the assembly is passed along an assembly line.

The activities shown are centered around the perform major assemblies and installation activities, and include assigning the specific tasks and set-up in preparation for the task, as well as breaking down and returning the tools after completing the effort.

The "Inspect or Test" activity is to ensure that the assembly or installation was carried out satisfactorily and/or functions correctly.

The "Handle Non-Conforming Materials" activity is necessary to determine disposition where errors are found. Scrap at this stage

PUBLICATION

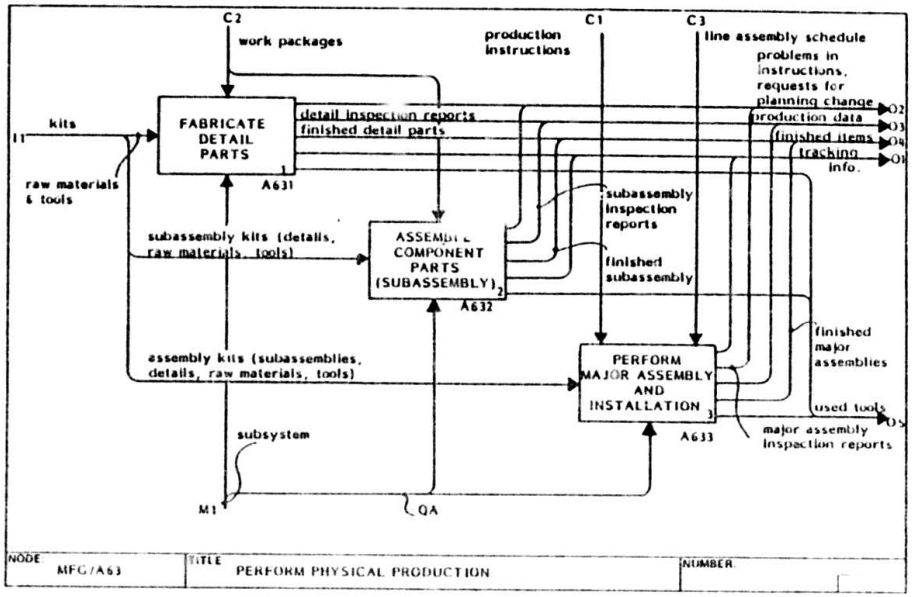

is uncommon due to the cost of the assembly.

FTR110410000U
8 September 1983

PUBLICATION

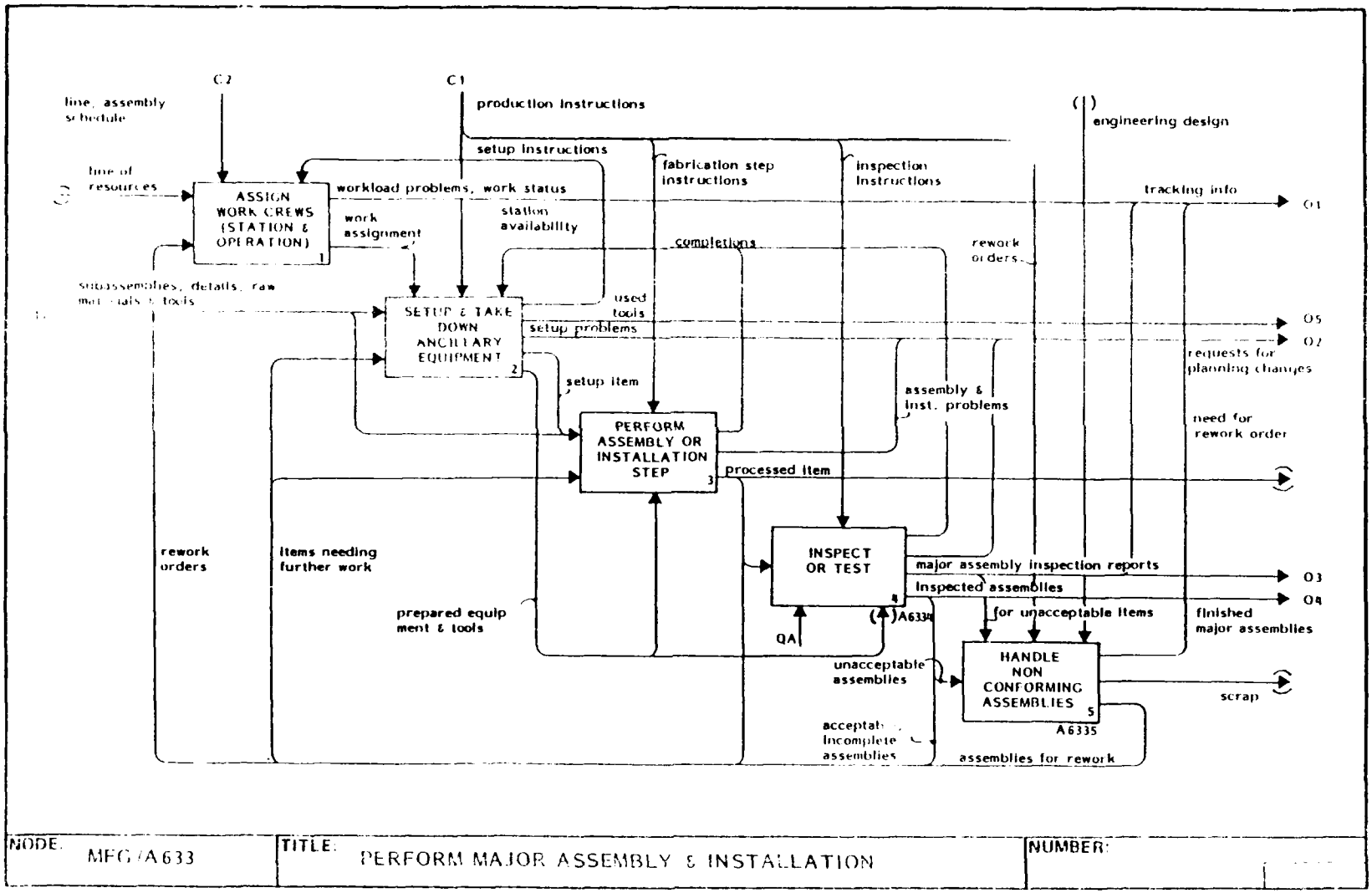

NODE: MFG/A633	TITLE: PERFORM MAJOR ASSEMBLY & INSTALLATION	NUMBER:

A6334 Inspect or Test

Major Assemblies and Installations are inspected to assure compliance with requirements. The parts are either accepted or declared nonconforming for subsequent MRB action. TI&E data is collected for analysis and potential corrective action.

PUBLICATION

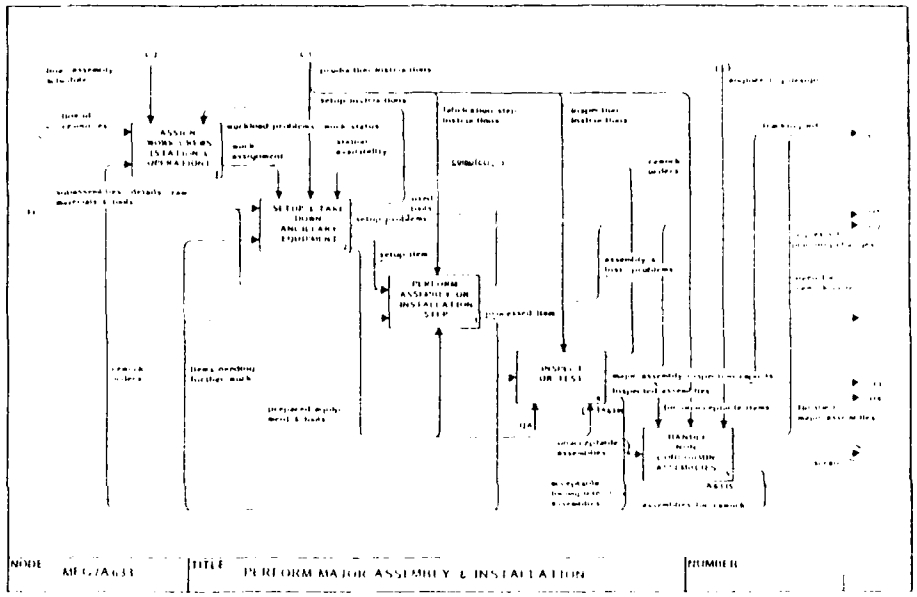

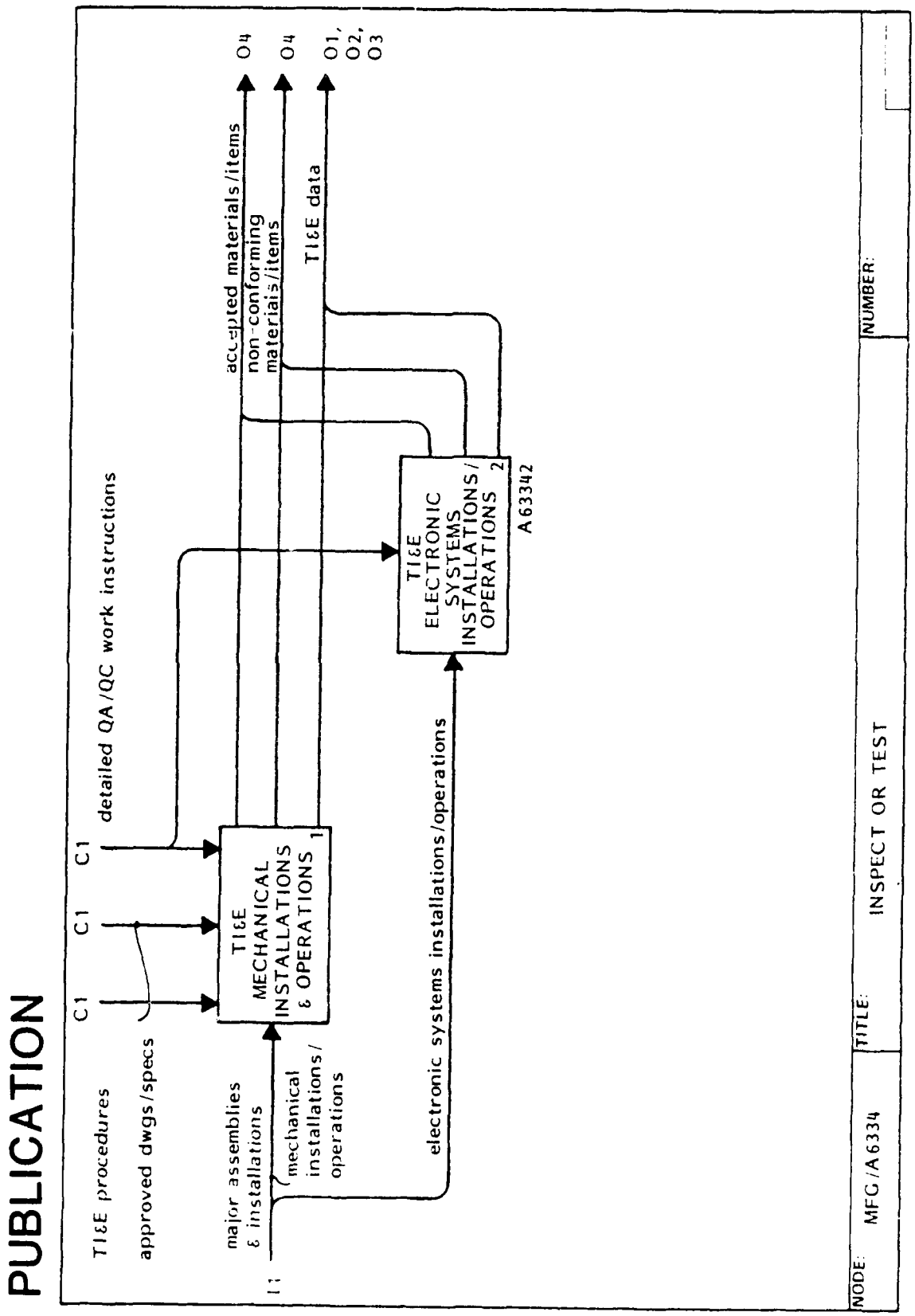
PUBLICATION
TI&E procedures
approved dwgs/specs
C1
C1
C1
C1
detailed QA/QC work instructions
major assemblies & installations
mechanical installations/ operations
electronic systems installations/operations
TI&E MECHANICAL INSTALLATIONS & OPERATIONS 1
TI&E ELECTRONIC SYSTEMS INSTALLATIONS/ OPERATIONS 2
accepted materials/items
non-conforming materials/items
TI&E data
O4
O4
O1, O2, O3
A63342
NODE: MFG/A6334
TITLE: INSPECT OR TEST
NUMBER:

A63342 Test and Inspect Electronic/ Electrical Assemblies and Installations

PUBLICATION

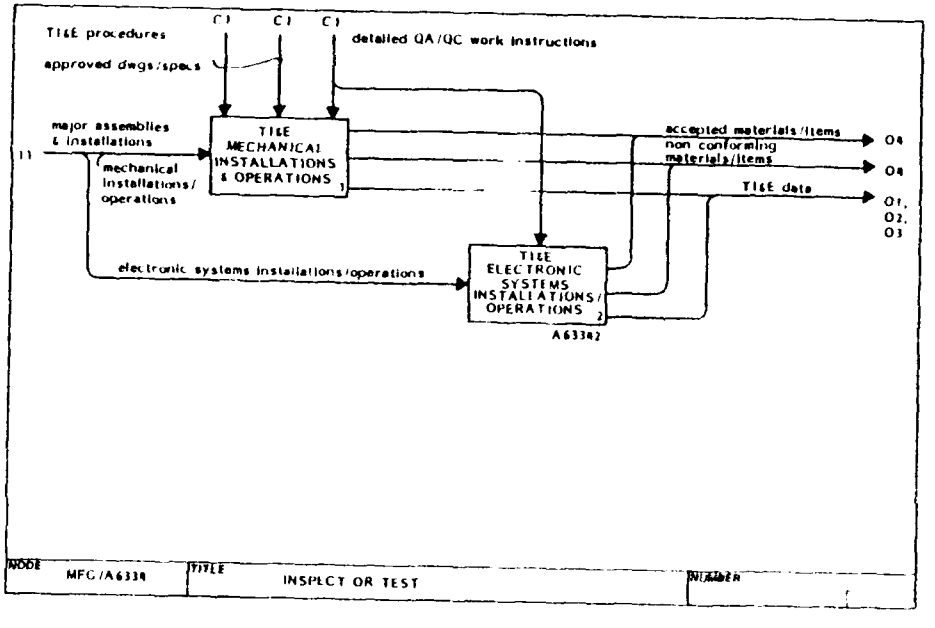

PUBLICATION

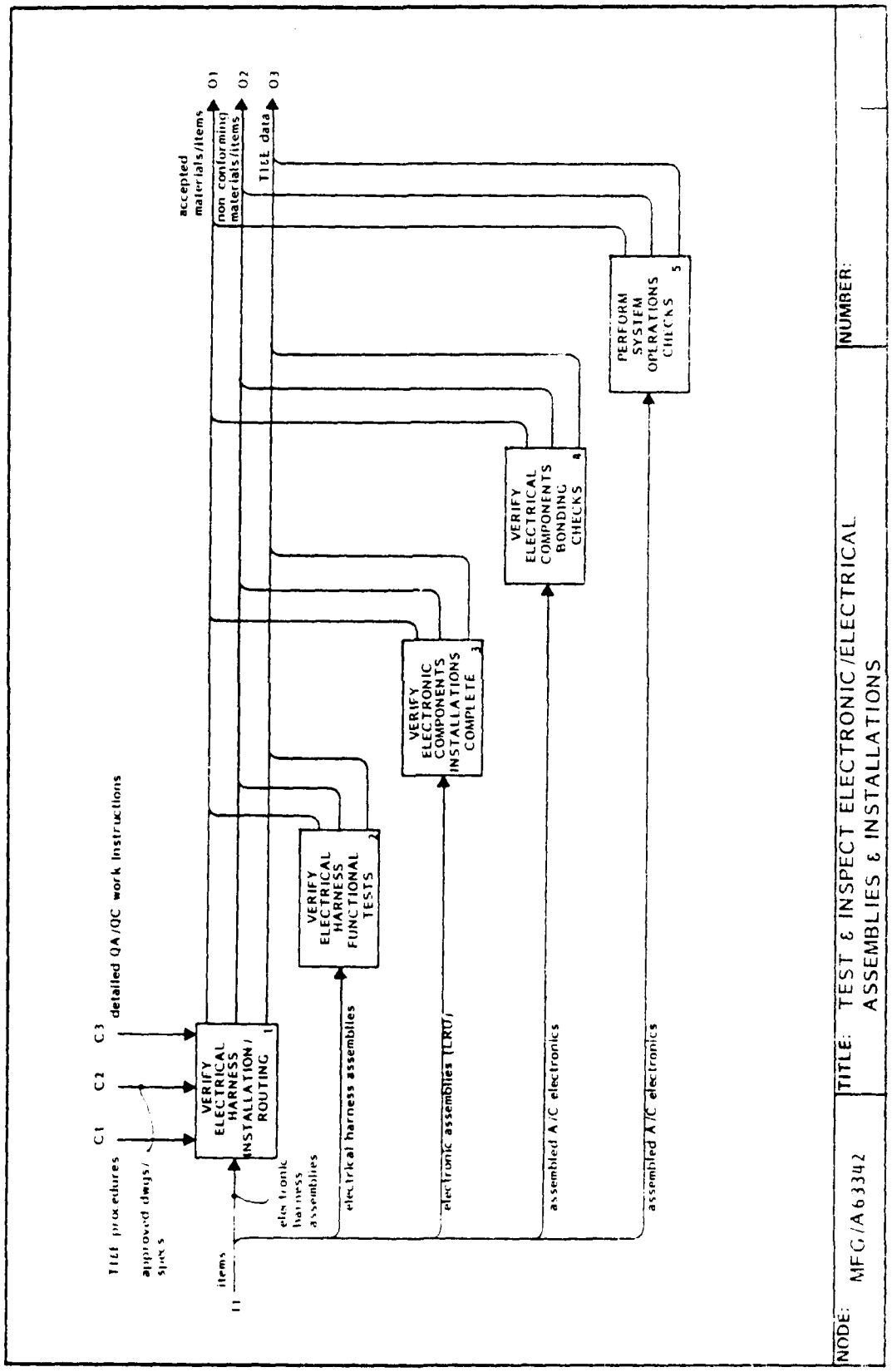

A6335 Handle Non-Conforming Assemblies

PUBLICATION

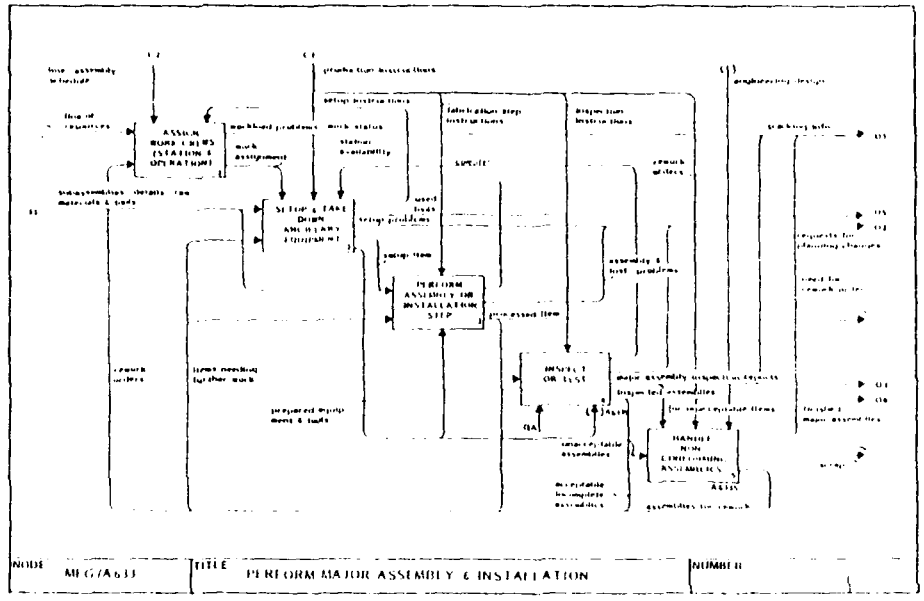

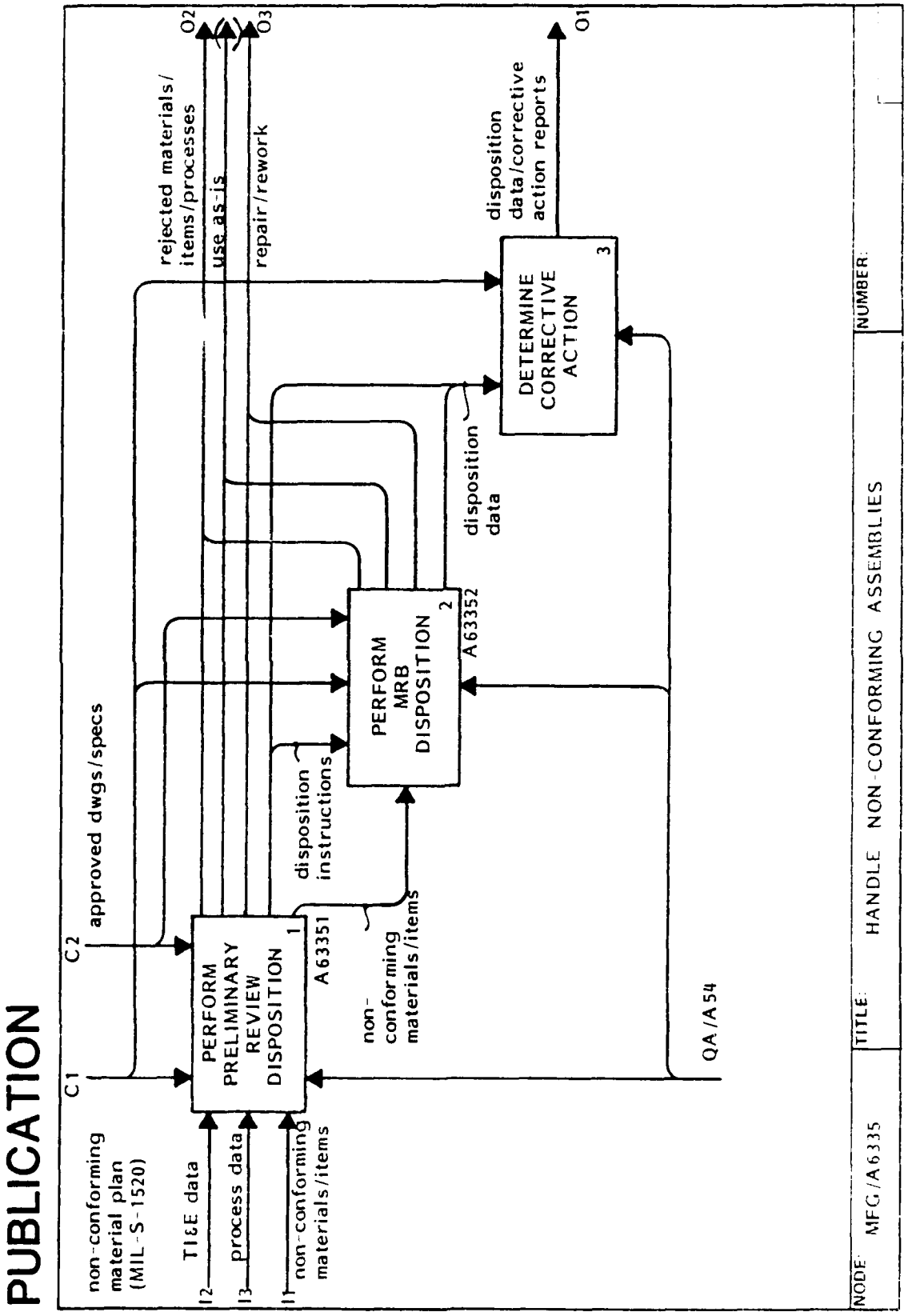
PUBLICATION
non-conforming material plan (MIL-S-1520)
TI&E data
process data
non-conforming materials/items
C1
C2
approved dwgs/specs
PERFORM PRELIMINARY REVIEW DISPOSITION
1
A63351
rejected materials/ items/processes
use as-is
repair/rework
O2
O3
disposition instructions
non-conforming materials/items
PERFORM MRB DISPOSITION
2
A63352
disposition data
DETERMINE CORRECTIVE ACTION
3
disposition data/corrective action reports
O1
QA/A54
NODE:
MFG/A6335
TITLE:
HANDLE NON-CONFORMING ASSEMBLIES
NUMBER:

A63351 Perform Preliminary Review Disposition

PUBLICATION

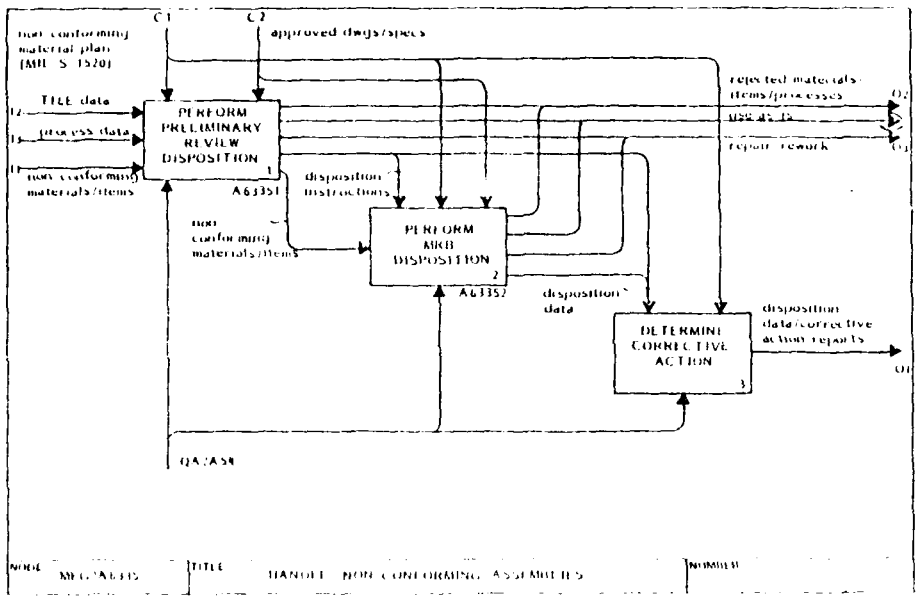

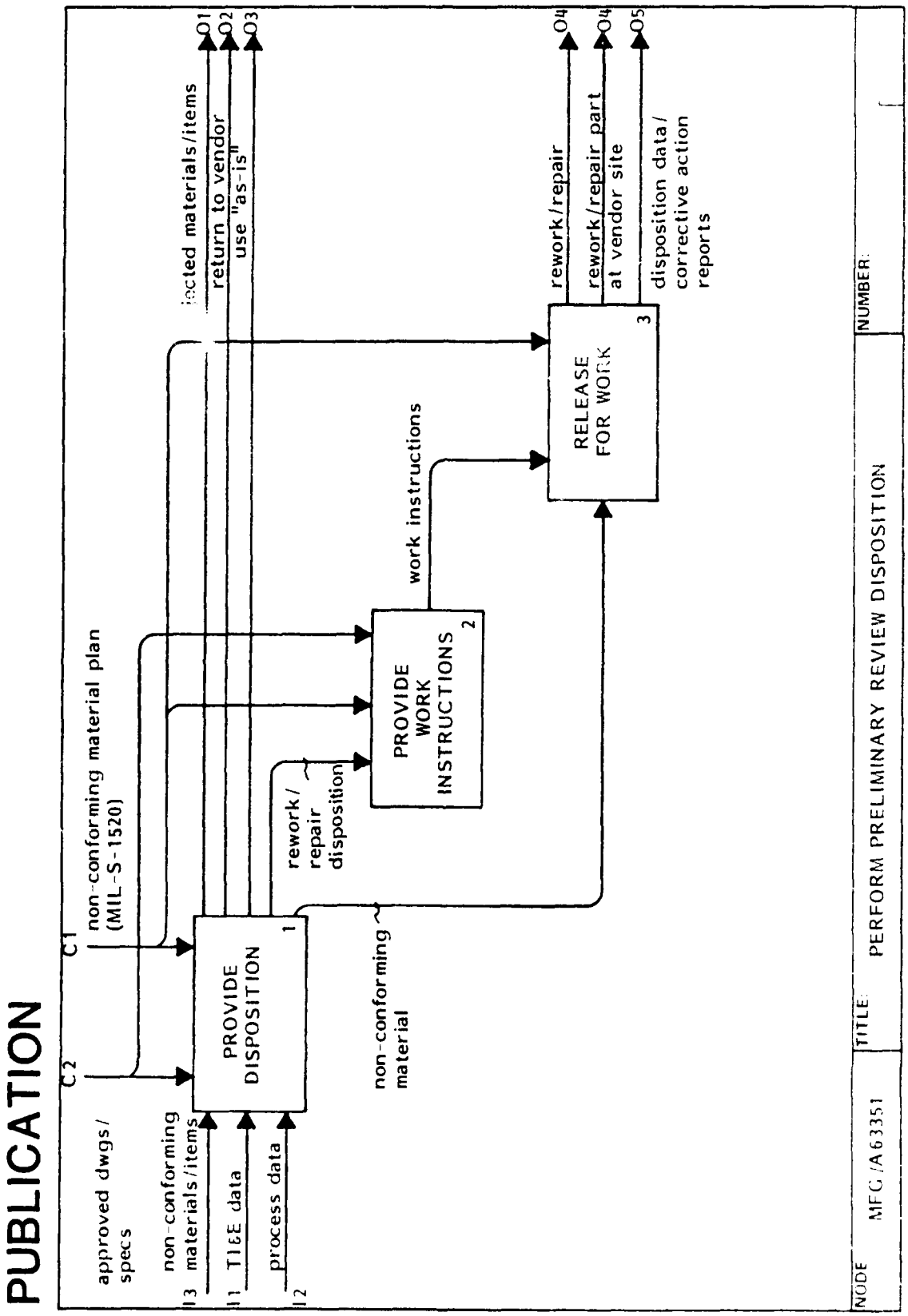
PUBLICATION
approved dwgs/ specs
C2
non-conforming materials/items
I3
T1&E data
I1
process data
I2
C1
non-conforming material plan (MIL-S-1520)
PROVIDE DISPOSITION
1
non-conforming material
rework/ repair disposition
PROVIDE WORK INSTRUCTIONS
2
work instructions
RELEASE FOR WORK
3
ected materials/items
O1
return to vendor
O2
use "as-is"
O3
rework/repair
O4
rework/repair part at vendor site
O4
disposition data/ corrective action reports
O5
NODE
MFG/A63351
TITLE
PERFORM PRELIMINARY REVIEW DISPOSITION
NUMBER

A63352 Perform MRB Disposition

PUBLICATION

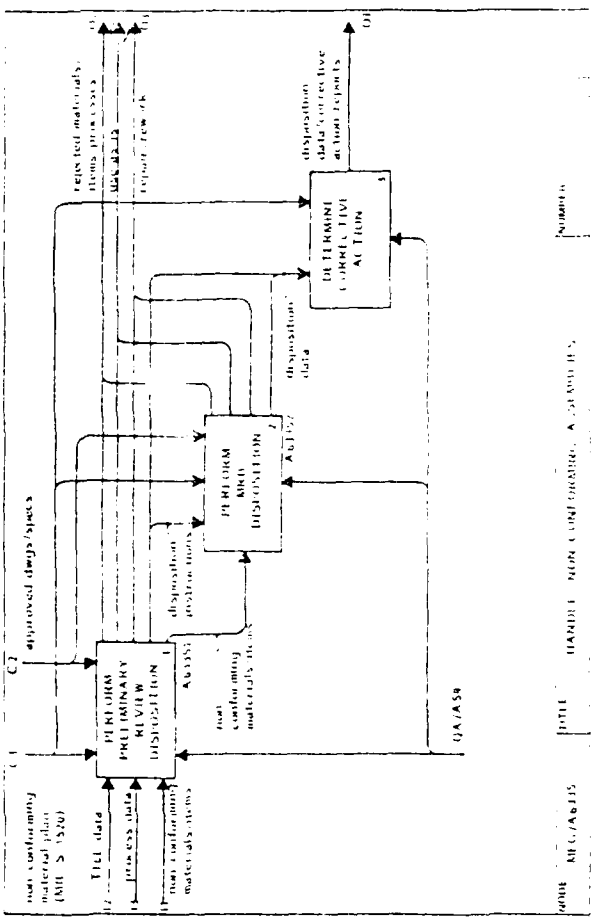

PUBLICATION

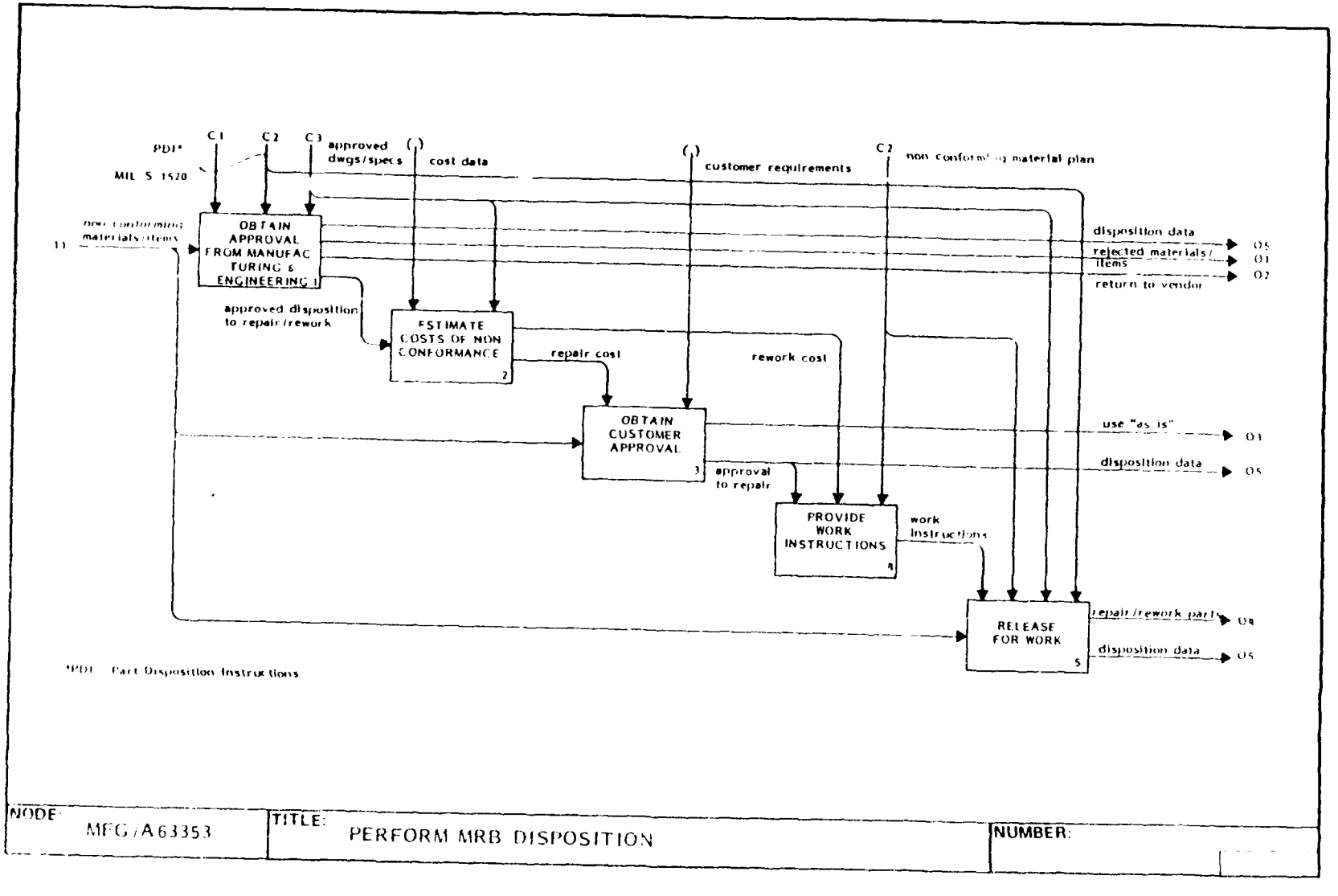

NODE:	TITLE:	NUMBER:
MFG/A63353	PERFORM MRB DISPOSITION	

A64 Test, Checkout

These activities constitute the final "Test, Checkout" of aircraft by QA personnel to assure the operational and flight capabilities of the completed aircraft.

PUBLICATION

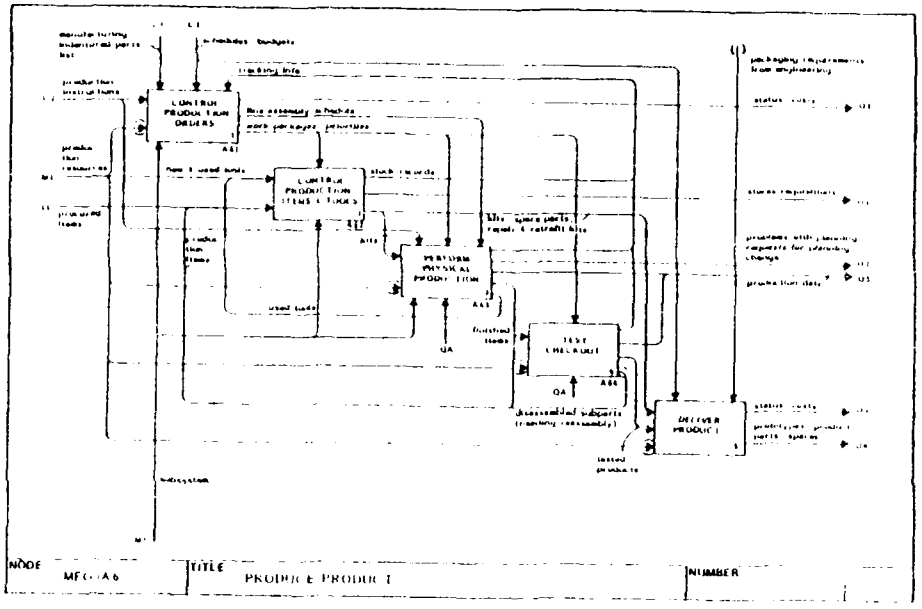

PUBLICATION

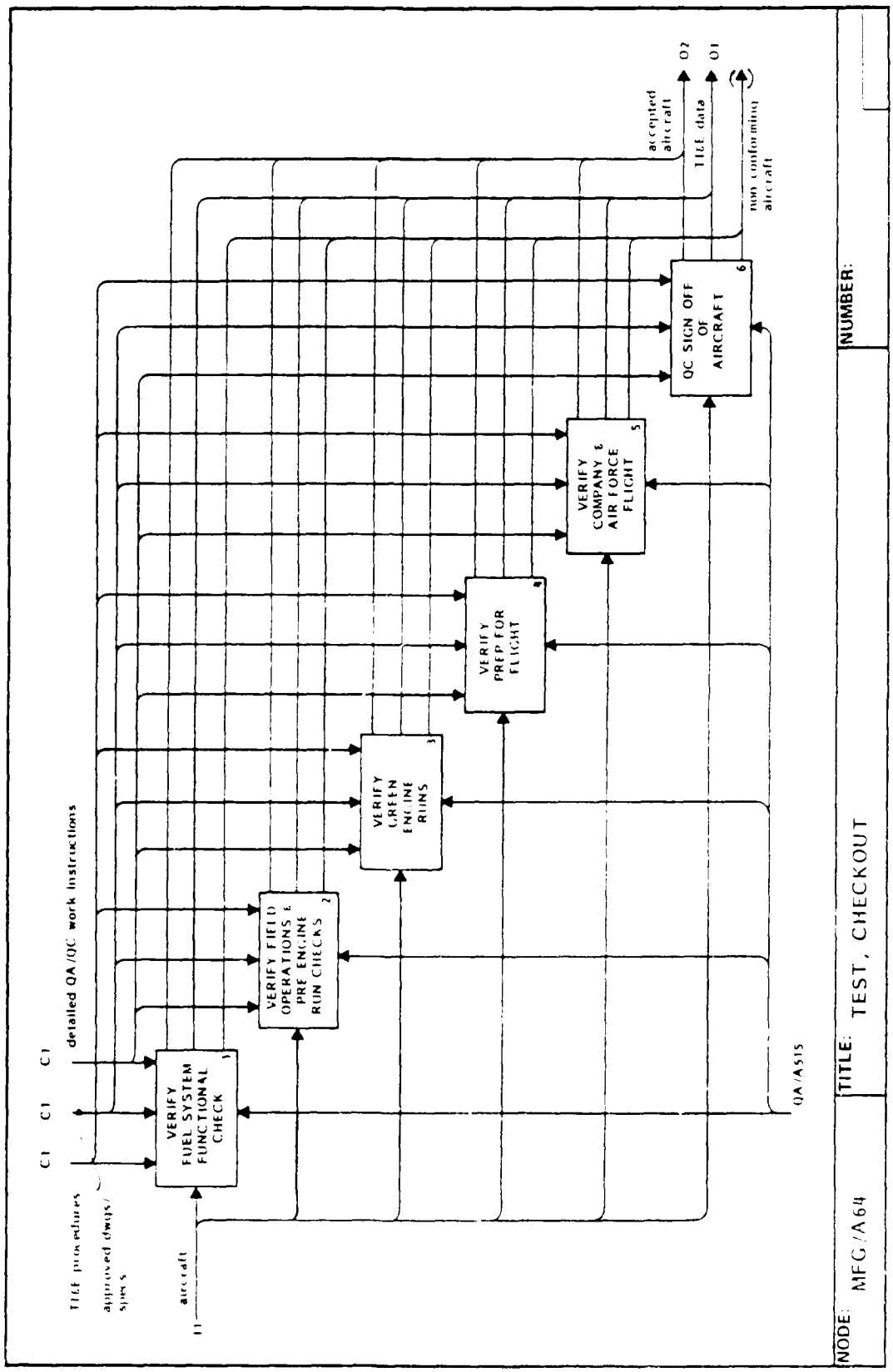

SECTION 3
ARCHITECTURE PART III - Final Report
DOCUMENT REQUEST ORDER FORM

SUBMIT DOCUMENT REQUESTS TO: AFWAL/MLTC
ICAM Program Library
Wright-Patterson AFB OH 45433

VOLUME NUMBER AND MANAGEMENT NUMBER	TITLE OF DOCUMENT	CHECK (✓)
AFWAL-TR-82-4063	VOLUME I - Architecture Part III Accomplishments	( )
AFWAL-TR-82-4063	VOLUME II - Procedures	( )
AFWAL-TR-82-4063	VOLUME III - Composite Function Model of "Design Product" (DESO)	( )
AFWAL-TR-82-4063	VOLUME IV - Composite Information Model of "Design Product" (DESI)	( )
AFWAL-TR-82-4063	VOLUME V - Composite Function Model of "Manufacture Product" (MFGO)	( )
AFWAL-TR-82-4063	VOLUME VI - Composite Information Model of "Manufacture Product" (MFGI)	( )
AFWAL-TR-82-4063	VOLUME VII - MFGO1 Glossary	( )
AFWAL-TR-82-4063	VOLUME VIII - Technology Transfer	( )

PLEASE PRINT

NAME: MAIL CODE:

TITLE:

PHONE NUMBER:

DEPARTMENT:

COMPANY:

STREET OR P.O. BOX:

CITY: STATE: ZIP:

REQUIREMENT FOR DOCUMENT

Document(s) requested for the purpose of (intended use and program/project application must be provided):

APPENDIX A

MFG0 NODE CHART

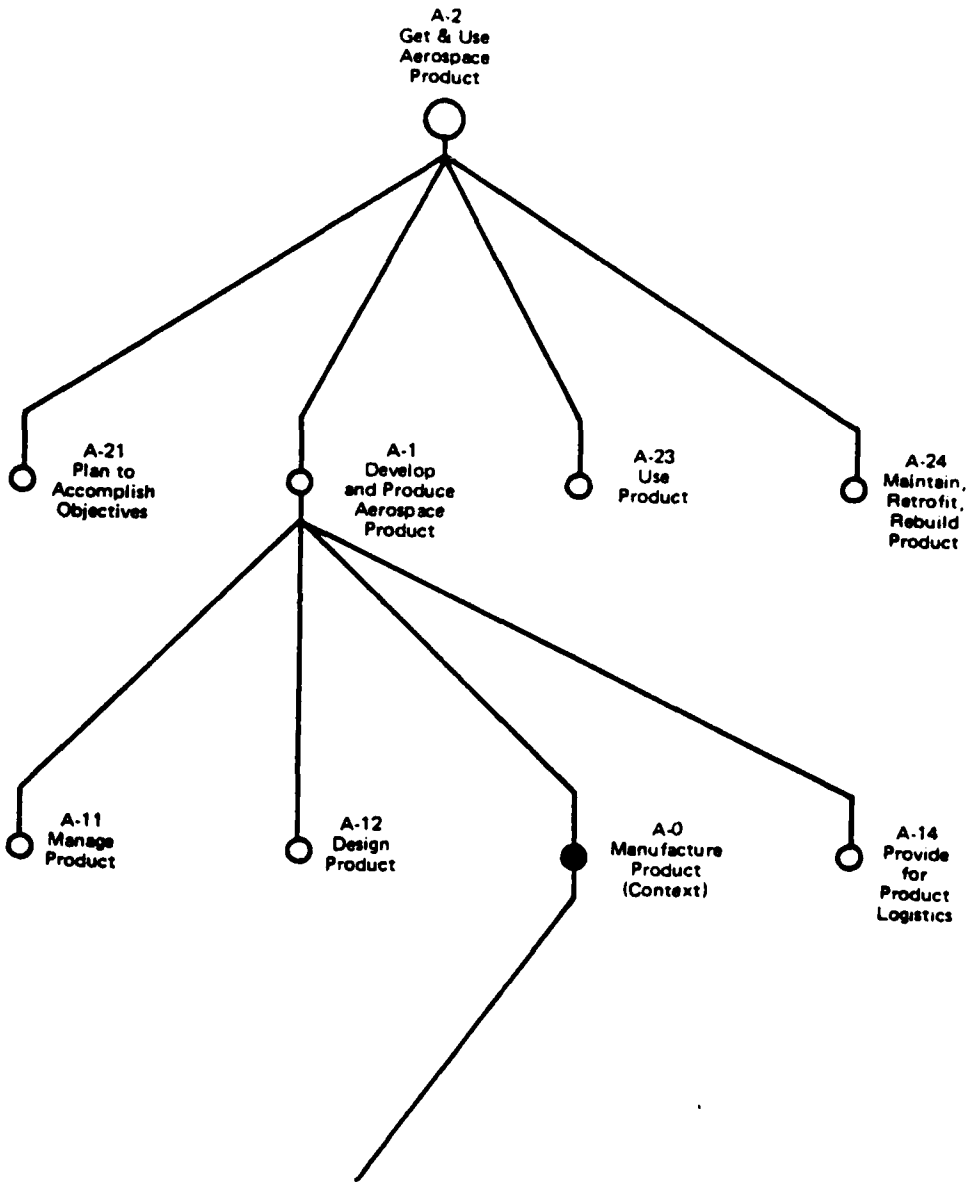

ICAM COMPOSITE VIE
AEROSPACE MANUFACT
COMPLETE INDEX OF CC

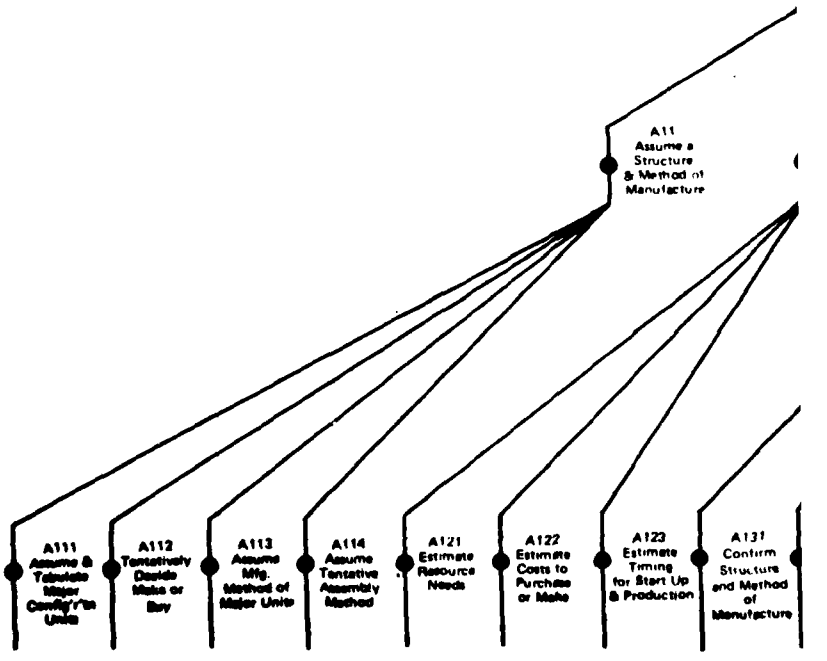

1

POSITE VIEW OF MANUFACTURING DEX OF CONTENTS

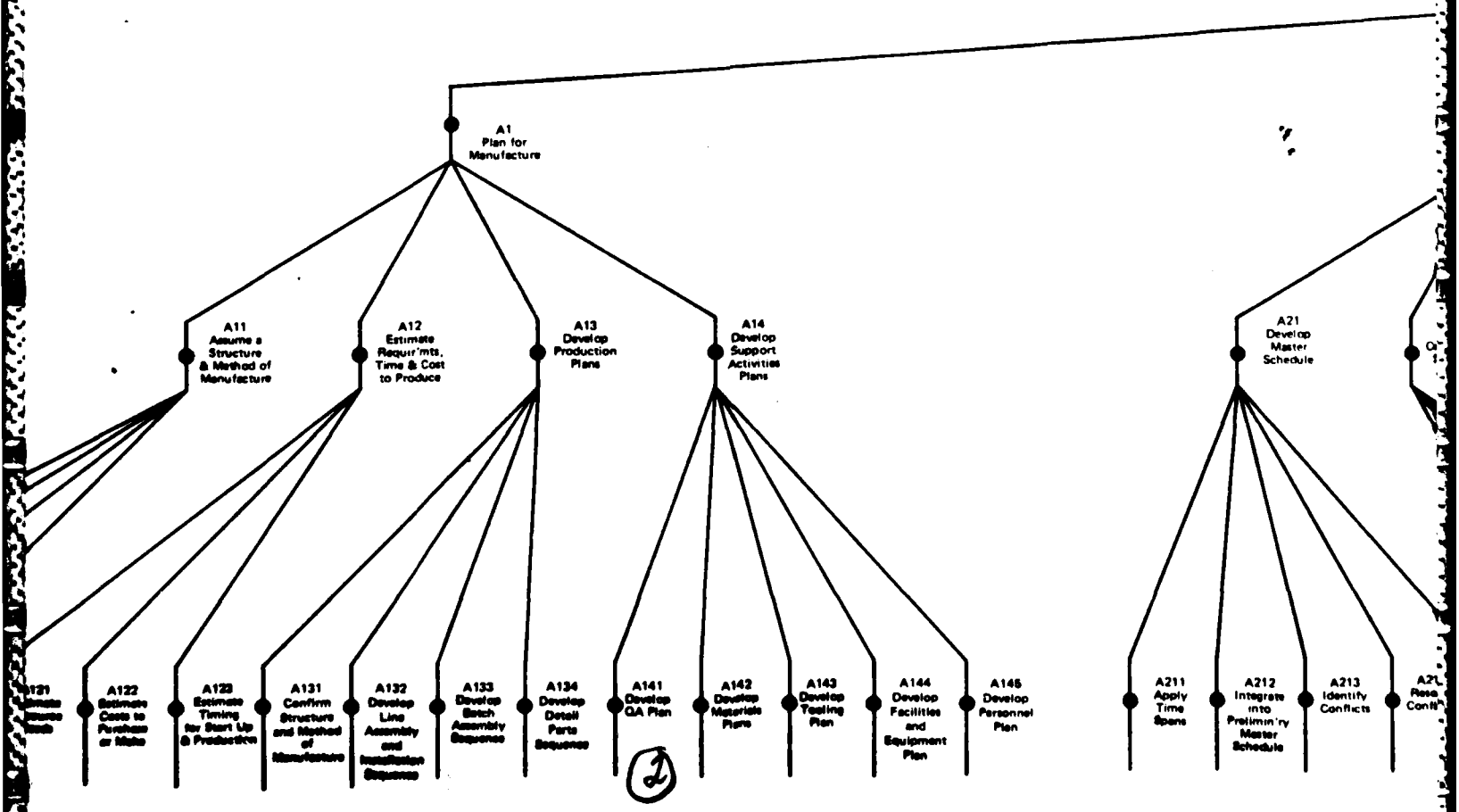

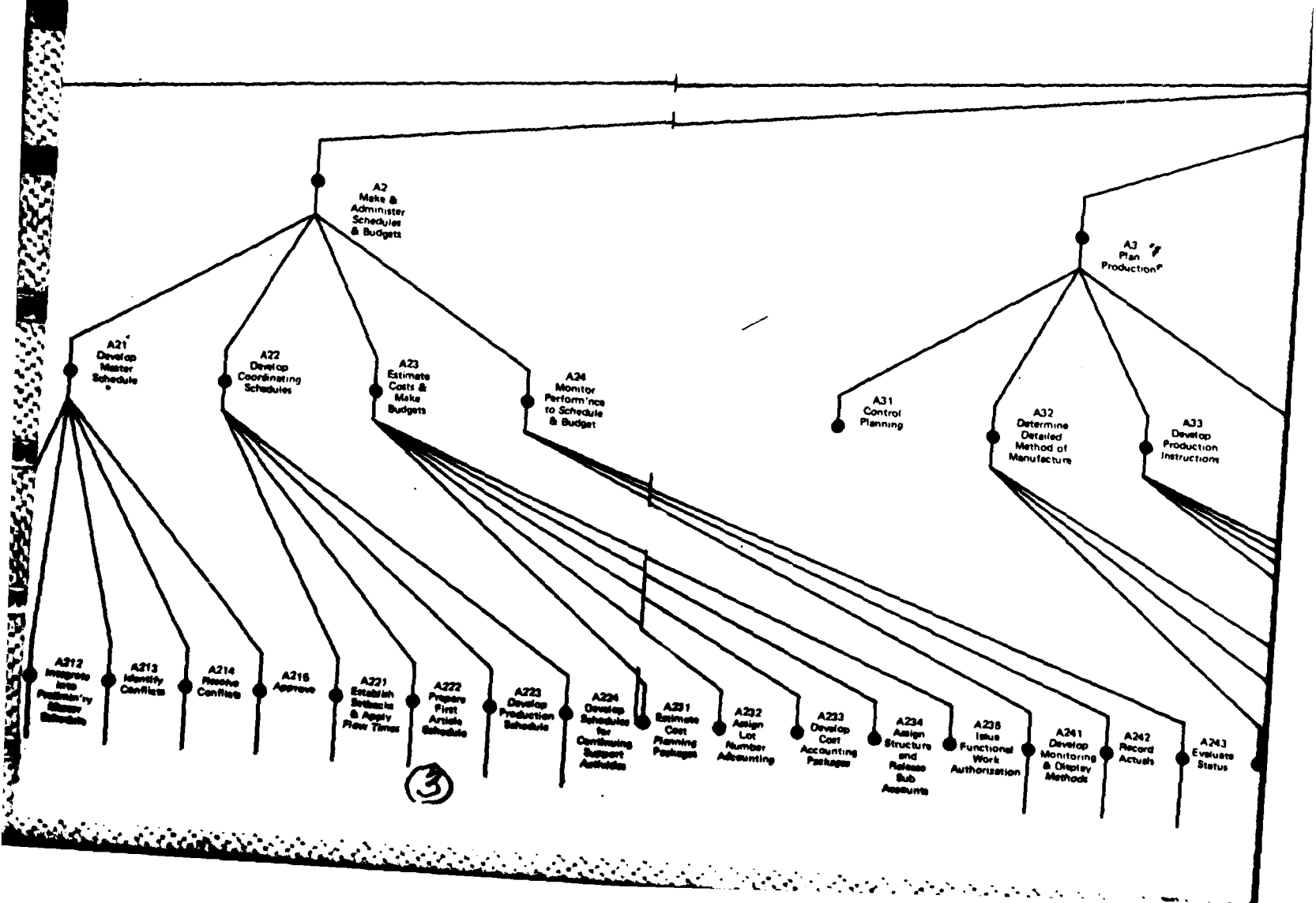
A2
Make & Administer Schedules & Budgets
A3
Plan Production
A21
Develop Master Schedule
A22
Develop Coordinating Schedules
A23
Estimate Costs & Make Budgets
A24
Monitor Performance to Schedule & Budget
A31
Control Planning
A32
Determine Detailed Method of Manufacture
A33
Develop Production Instructions
A212
Integrate into Preliminary Master Schedule
A213
Identify Conflicts
A214
Resolve Conflicts
A215
Approve
A221
Establish Schedule & Apply Flow Times
A222
Prepare First Article Schedule
A223
Develop Production Schedule
A224
Develop Schedules for Continuing Support Activities
A231
Estimate Cost Planning Packages
A232
Assign Lot Number Accounting
A233
Develop Cost Accounting Packages
A234
Assign Structure and Release Sub Accounts
A235
Issue Functional Work Authorization
A241
Develop Monitoring & Display Methods
A242
Record Actuals
A243
Evaluate Status

3

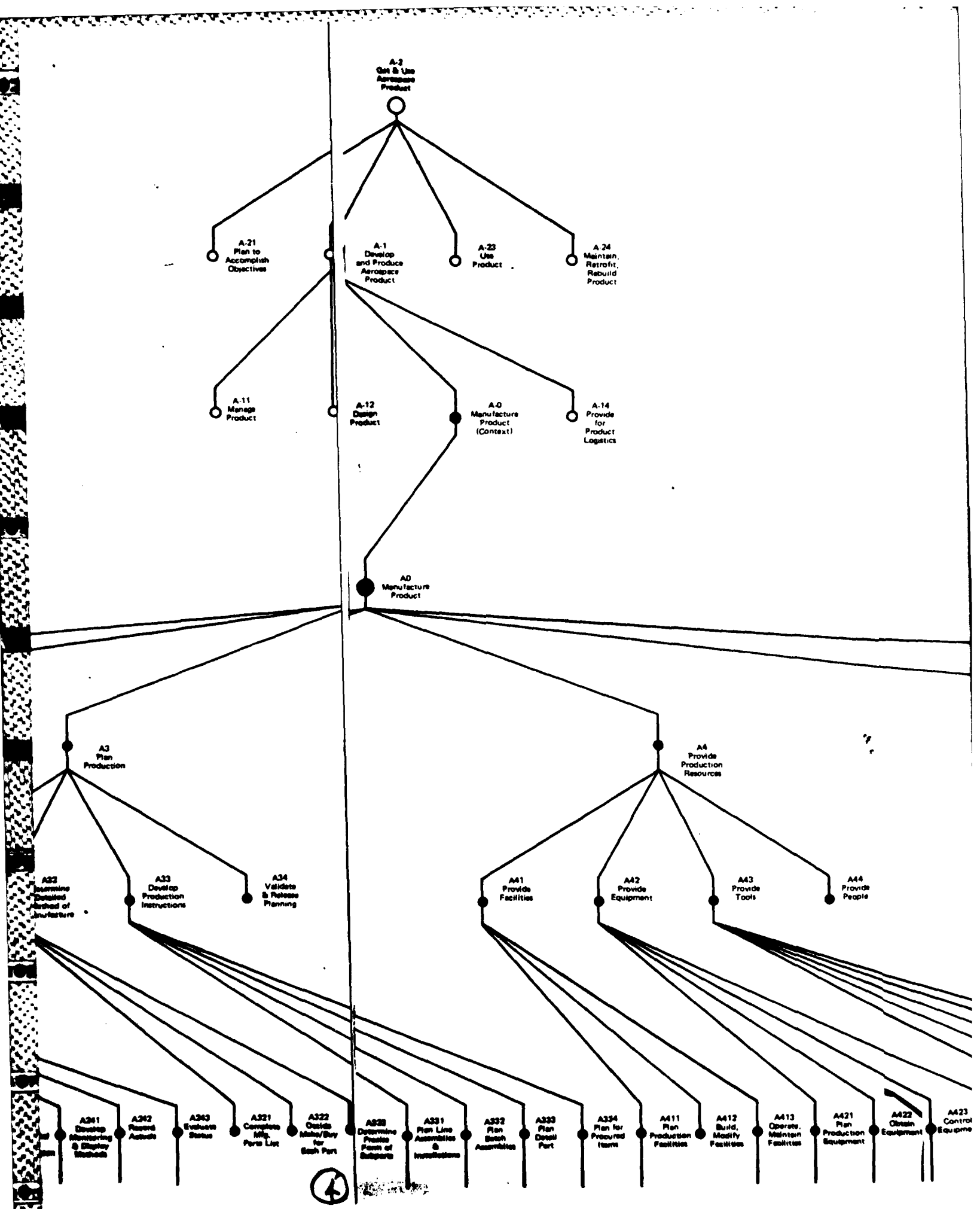
A-2
Get & Use
Aerospace
Product
A-21
Plan to
Accomplish
Objectives
A-1
Develop
and Produce
Aerospace
Product
A-23
Use
Product
A-24
Maintain,
Retrofit,
Rebuild
Product
A-11
Manage
Product
A-12
Design
Product
A-0
Manufacture
Product
(Context)
A-14
Provide
for
Product
Logistics
A0
Manufacture
Product
A3
Plan
Production
A4
Provide
Production
Resources
A32
Determine
Detailed
Flowhead of
Manufacture
A33
Develop
Production
Instructions
A34
Validate
& Release
Planning
A41
Provide
Facilities
A42
Provide
Equipment
A43
Provide
Tools
A44
Provide
People
A341
Develop
Monitoring
& Display
Methods
A342
Record
Actuals
A343
Evaluate
Status
A321
Complete
Mfg.
Parts List
A322
Decide
Make/Buy
for
Each Part
A323
Determine
Precise
Form of
Subparts
A331
Plan Line
Assemblies
&
Installations
A332
Plan
Each
Assembles
A333
Plan
Detail
Part
A334
Plan for
Procured
Items
A411
Plan
Production
Facilities
A412
Build,
Modify
Facilities
A413
Operate,
Maintain
Facilities
A421
Plan
Production
Equipment
A422
Obtain
Equipment
A423
Control
Equipme

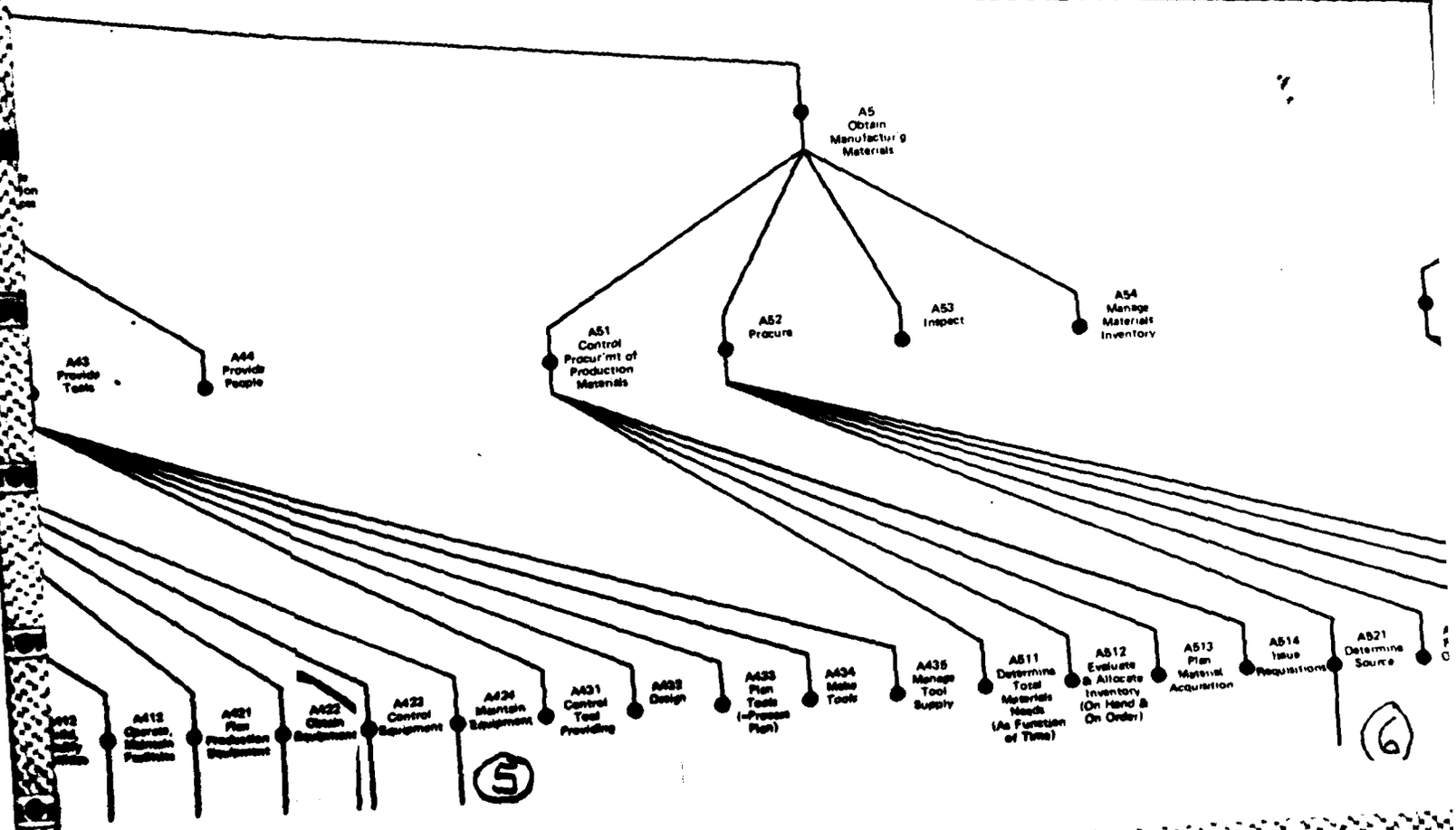
A5
Obtain
Manufacturing
Materials
A51
Control
Procur'mt of
Production
Materials
A52
Procure
A53
Inspect
A54
Manage
Materials
Inventory
A43
Provide
Tools
A44
Provide
People
A413
Operate
Maintain
Facilities
A421
Plan
Production
Requirements
A422
Obtain
Equipment
A423
Control
Equipment
A424
Maintain
Equipment
A431
Control
Tool
Providing
A432
Design
A433
Plan
Tools
(=Process
Plan)
A434
Make
Tools
A435
Manage
Tool
Supply
A511
Determine
Total
Materials
Needs
(As Function
of Time)
A512
Evaluate
& Allocate
Inventory
(On Hand &
On Order)
A513
Plan
Material
Acquisition
A514
Issue
Requisitions
A521
Determine
Source
5
6

ICA

INTEGRA

COMPUTER-AIDED M

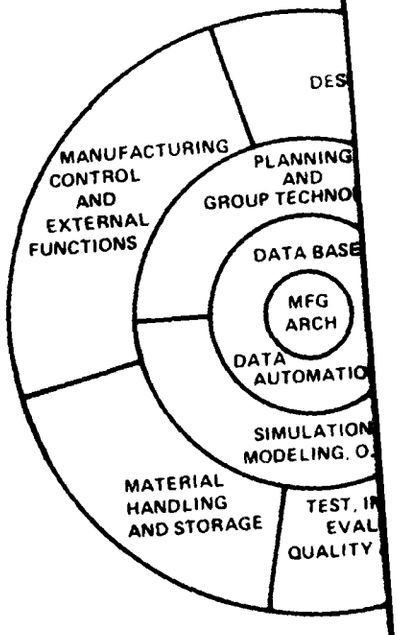

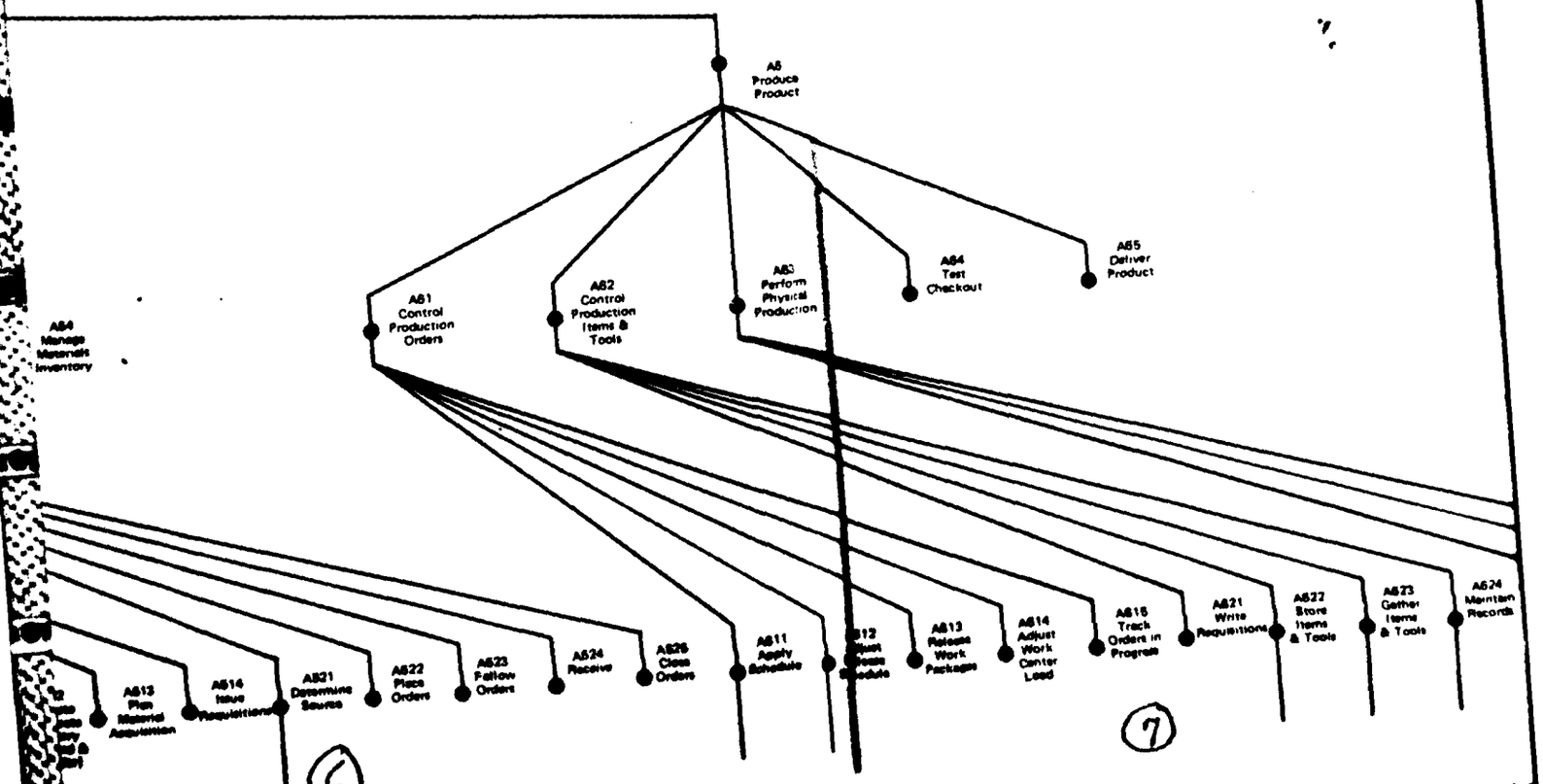

6

7

FTR110410000U
8 September 1984

ICAM

INTEGRATED COMPUTER-AIDED MANUFACTURING

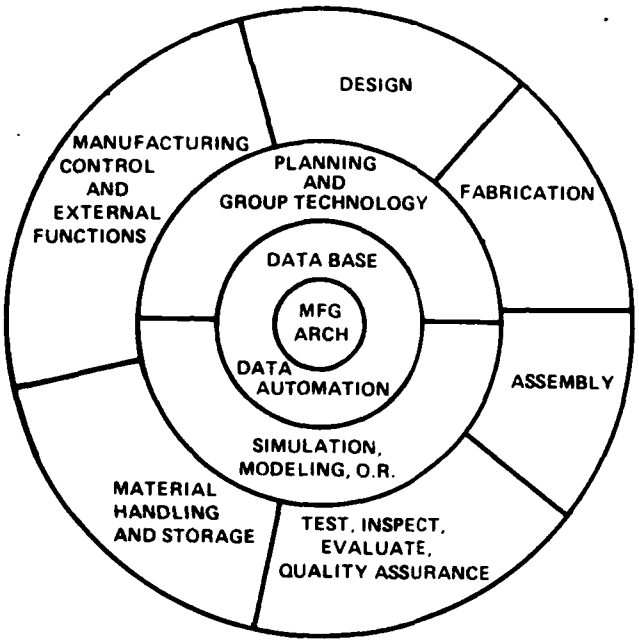

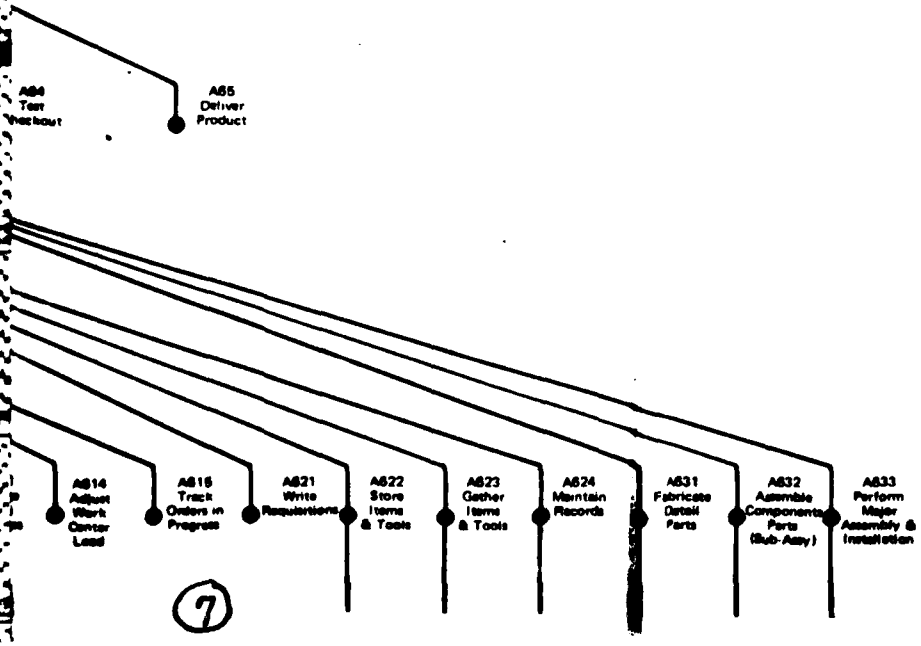

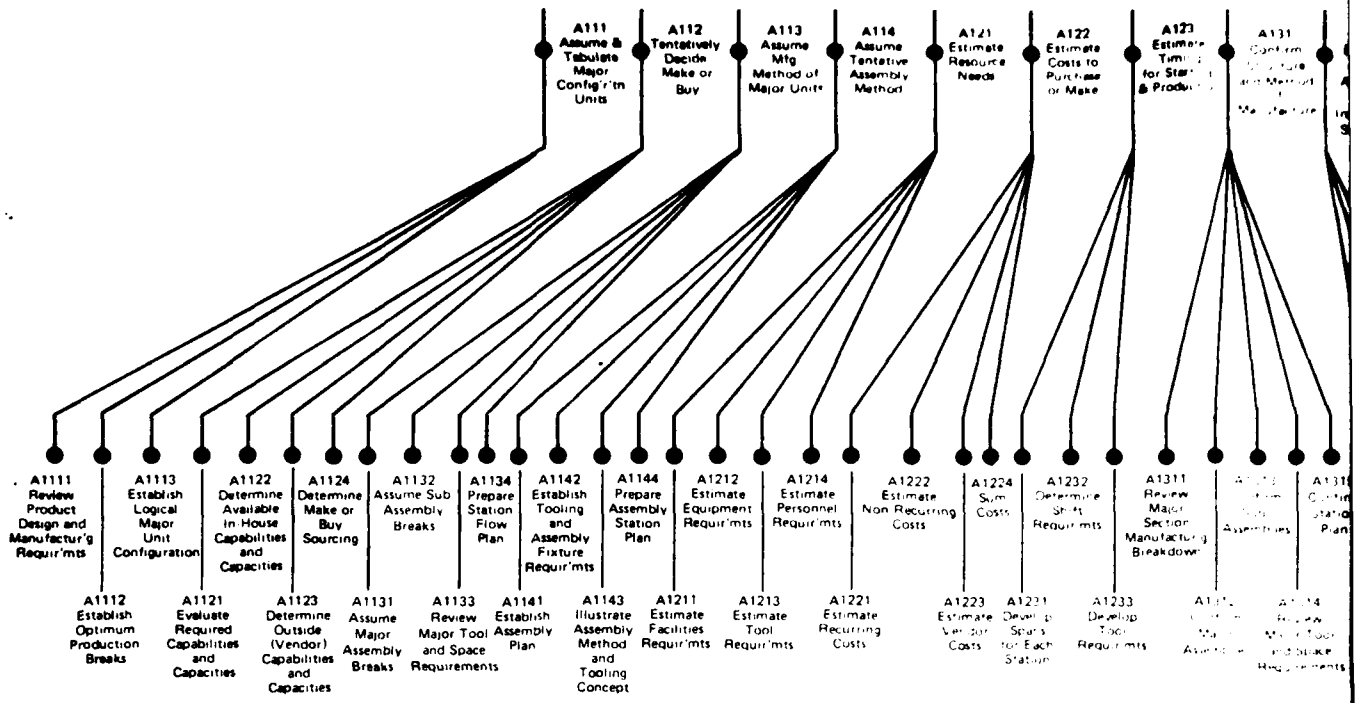
A111 Assume & Tabulate Major Config'r'tn Units
A112 Tentatively Decide Make or Buy
A113 Assume Mfg Method of Major Units
A114 Assume Tentative Assembly Method
A121 Estimate Resource Needs
A122 Estimate Costs to Purchase or Make
A123 Estimate Timing for Start & Produ
A131
A1111 Review Product Design and Manufactur'g Requir'mts
A1112 Establish Optimum Production Breaks
A1113 Establish Logical Major Unit Configuration
A1121 Evaluate Required Capabilities and Capacities
A1122 Determine Available In-House Capabilities and Capacities
A1123 Determine Outside (Vendor) Capabilities and Capacities
A1124 Determine Make or Buy Sourcing
A1131 Assume Major Assembly Breaks
A1132 Assume Sub Assembly Breaks
A1133 Review Major Tool and Space Requirements
A1134 Prepare Station Flow Plan
A1141 Establish Assembly Plan
A1142 Establish Tooling and Assembly Fixture Requir'mts
A1143 Illustrate Assembly Method and Tooling Concept
A1144 Prepare Assembly Station Plan
A1211 Estimate Facilities Requir'mts
A1212 Estimate Equipment Requir'mts
A1213 Estimate Tool Requir'mts
A1214 Estimate Personnel Requir'mts
A1221 Estimate Recurring Costs
A1222 Estimate Non Recurring Costs
A1223 Estimate Vendor Costs
A1224 Sum Costs
A1231 Develop Spars for Each Station
A1232 Determine Shift Requir'mts
A1233 Develop Tool Requir'mts
A1311 Review Major Section Manufacturing Breakdown

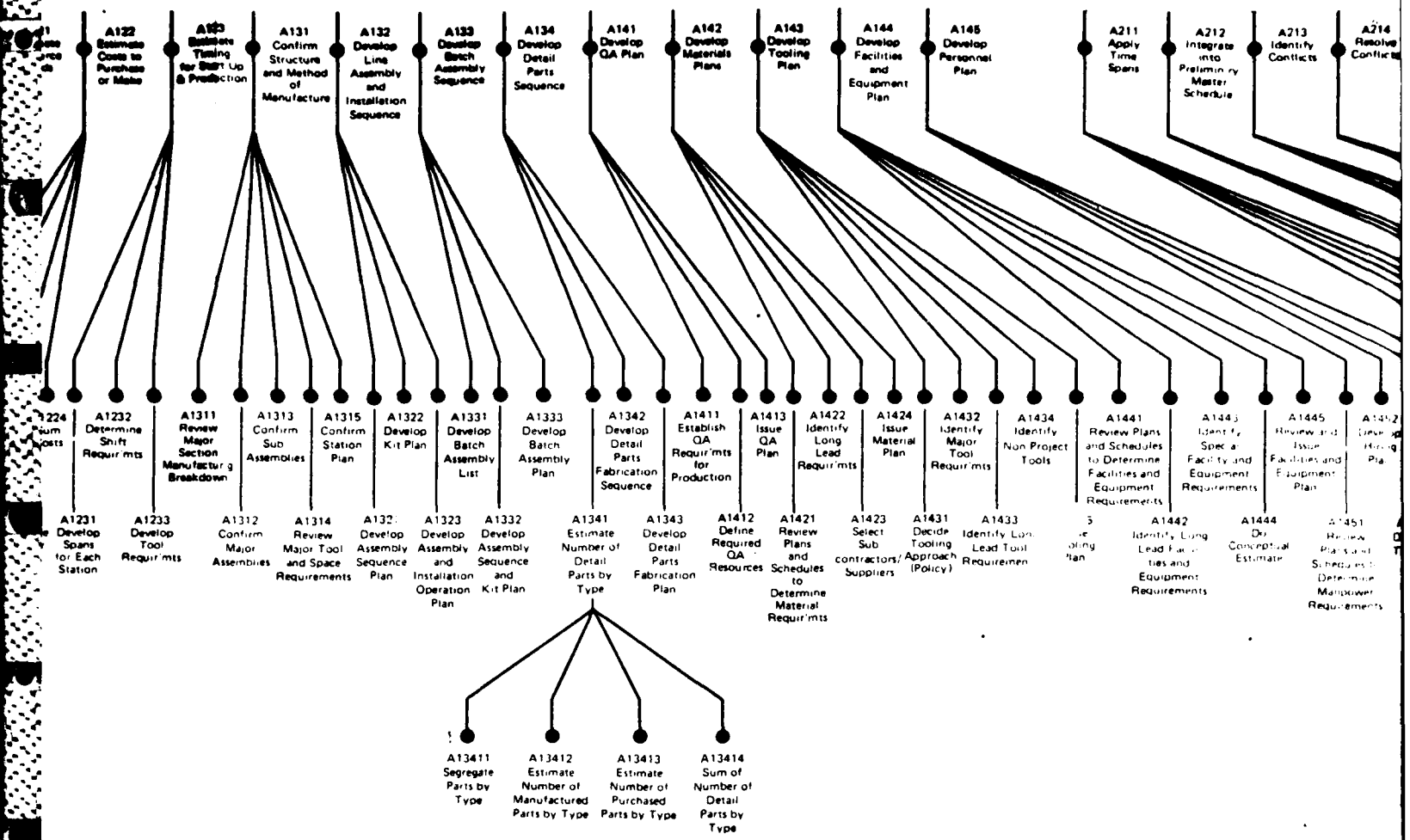
A122 Estimate Costs to Purchase or Make
A123 Estimate Timing for Start Up & Production
A131 Confirm Structure and Method of Manufacture
A132 Develop Line Assembly and Installation Sequence
A133 Develop Batch Assembly Sequence
A134 Develop Detail Parts Sequence
A141 Develop QA Plan
A142 Develop Materials Plans
A143 Develop Tooling Plan
A144 Develop Facilities and Equipment Plan
A145 Develop Personnel Plan
A211 Apply Time Spans
A212 Integrate into Preliminary Master Schedule
A213 Identify Conflicts
A214 Resolve Conflicts
A1232 Determine Shift Requirmts
A1311 Review Major Section Manufacturing Breakdown
A1313 Confirm Sub Assemblies
A1315 Confirm Station Plan
A1322 Develop Kit Plan
A1331 Develop Batch Assembly List
A1333 Develop Batch Assembly Plan
A1342 Develop Detail Parts Fabrication Sequence
A1411 Establish QA Requirmts for Production
A1413 Issue QA Plan
A1422 Identify Long Lead Requirmts
A1424 Issue Material Plan
A1432 Identify Major Tool Requirmts
A1434 Identify Non Project Tools
A1441 Review Plans and Schedules to Determine Facilities and Equipment Requirements
A1445 Review and Issue Facilities and Equipment Plan
A1231 Develop Spans for Each Station
A1233 Develop Tool Requirmts
A1312 Confirm Major Assemblies
A1314 Review Major Tool and Space Requirements
A1323 Develop Assembly and Installation Operation Plan
A1332 Develop Assembly Sequence and Kit Plan
A1341 Estimate Number of Detail Parts by Type
A1343 Develop Detail Parts Fabrication Plan
A1412 Define Required QA Resources
A1421 Review Plans and Schedules to Determine Material Requirmts
A1423 Select Sub contractors/ Suppliers
A1431 Decide Tooling Approach (Policy)
A1442 Identify Long Lead Facilities and Equipment Requirements
A1444 Do Conceptual Estimate
A1451 Review Plans and Schedules to Determine Manpower Requirements
A13411 Segregate Parts by Type
A13412 Estimate Number of Manufactured Parts by Type
A13413 Estimate Number of Purchased Parts by Type
A13414 Sum of Number of Detail Parts by Type

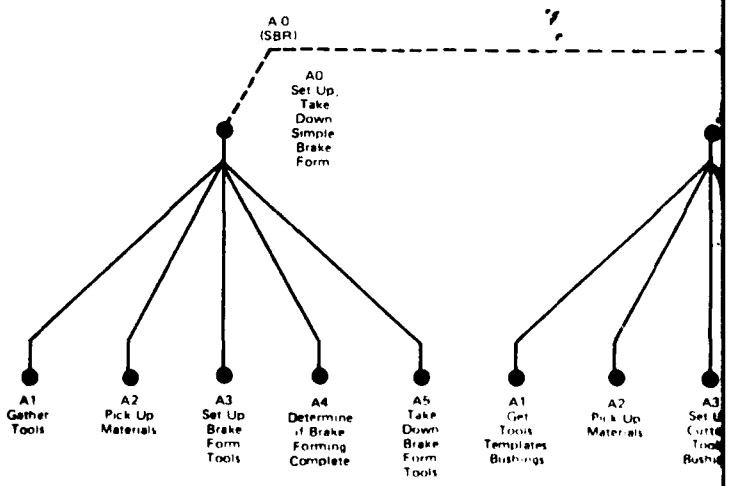
A 0 (SBR)
A0 Set Up, Take Down Simple Brake Form
A1 Gather Tools
A2 Pick Up Materials
A3 Set Up Brake Form Tools
A4 Determine if Brake Forming Complete
A5 Take Down Brake Form Tools
A1 Get Tools Templates Bushings
A2 Pick Up Materials

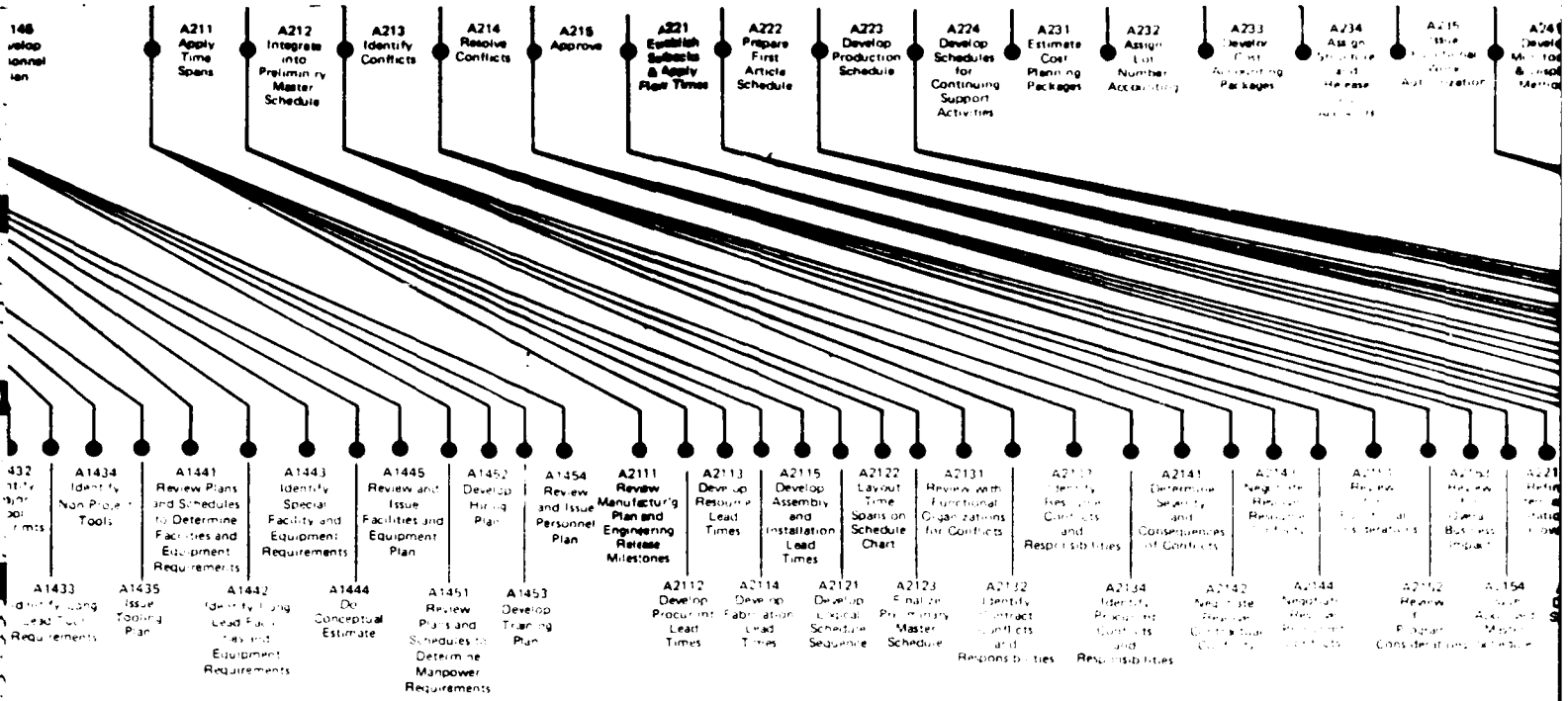
A211 Apply Time Spans
A212 Integrate into Preliminary Master Schedule
A213 Identify Conflicts
A214 Resolve Conflicts
A215 Approve
A221 Establish Subnets & Apply Flow Times
A222 Prepare First Article Schedule
A223 Develop Production Schedule
A224 Develop Schedules for Continuing Support Activities
A231 Estimate Cost Planning Packages
A232 Assign Lot Number Accounting
A233 Develop Cost Accounting Packages
A1434 Identify Non Project Tools
A1441 Review Plans and Schedules to Determine Facilities and Equipment Requirements
A1443 Identify Special Facility and Equipment Requirements
A1445 Review and Issue Facilities and Equipment Plan
A1452 Develop Hiring Plan
A1454 Review and Issue Personnel Plan
A2111 Review Manufacturing Plan and Engineering Release Milestones
A2113 Develop Resource Lead Times
A2115 Develop Assembly and Installation Lead Times
A2122 Layout Time Spans on Schedule Chart
A2131 Review with Functional Organizations for Conflicts
A2141 Determine Severity and Consequences of Conflicts
A1433 Identify Long Lead Tools Requirements
A1435 Issue Tooling Plan
A1442 Identify Long Lead Facilities and Equipment Requirements
A1444 Do Conceptual Estimate
A1451 Review Plans and Schedules to Determine Manpower Requirements
A1453 Develop Training Plan
A2112 Develop Procurement Lead Times
A2114 Develop Fabrication Lead Times
A2121 Develop Logical Schedule Sequence
A2123 Finalize Preliminary Master Schedule
A2132 Identify Contract Conflicts and Responsibilities
A2134 Identify Procurement Conflicts and Responsibilities
A2142 Negotiate Review Conflicts
A2144 Negotiate Procurement Conflicts
A2152 Review Program Considerations
A1454 Review Accounting Master Schedule
A2152 Review Business Impact

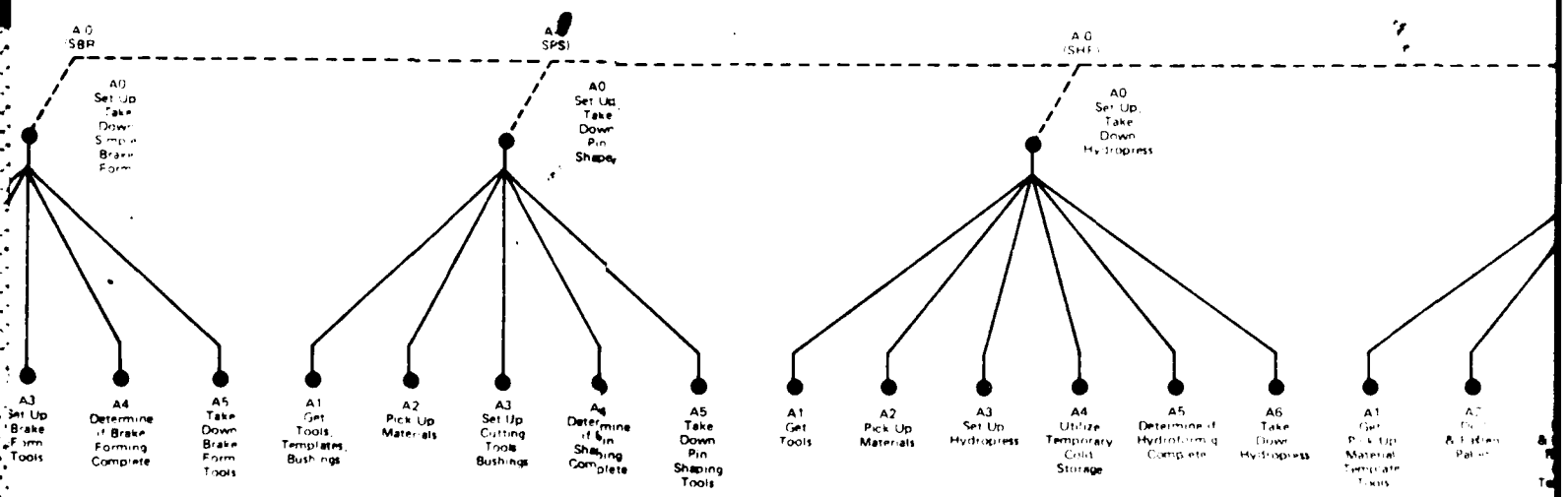
A0 (SBR)
A0 Set Up Take Down Simple Brake Form
A3 Set Up Brake Form Tools
A4 Determine if Brake Forming Complete
A5 Take Down Brake Form Tools
A0 (SPS)
A0 Set Up, Take Down Pin Shape
A1 Get Tools, Templates, Bushings
A2 Pick Up Materials
A3 Set Up Cutting Tools Bushings
A4 Determine if Pin Shaping Complete
A5 Take Down Pin Shaping Tools
A0 (SHP)
A0 Set Up, Take Down Hydropress
A1 Get Tools
A2 Pick Up Materials
A3 Set Up Hydropress
A4 Utilize Temporary Cold Storage
A5 Determine if Hydroforming Complete
A6 Take Down Hydropress
A1 Get Pick Up Material Template Tools
A2 Pick & Place Pallet

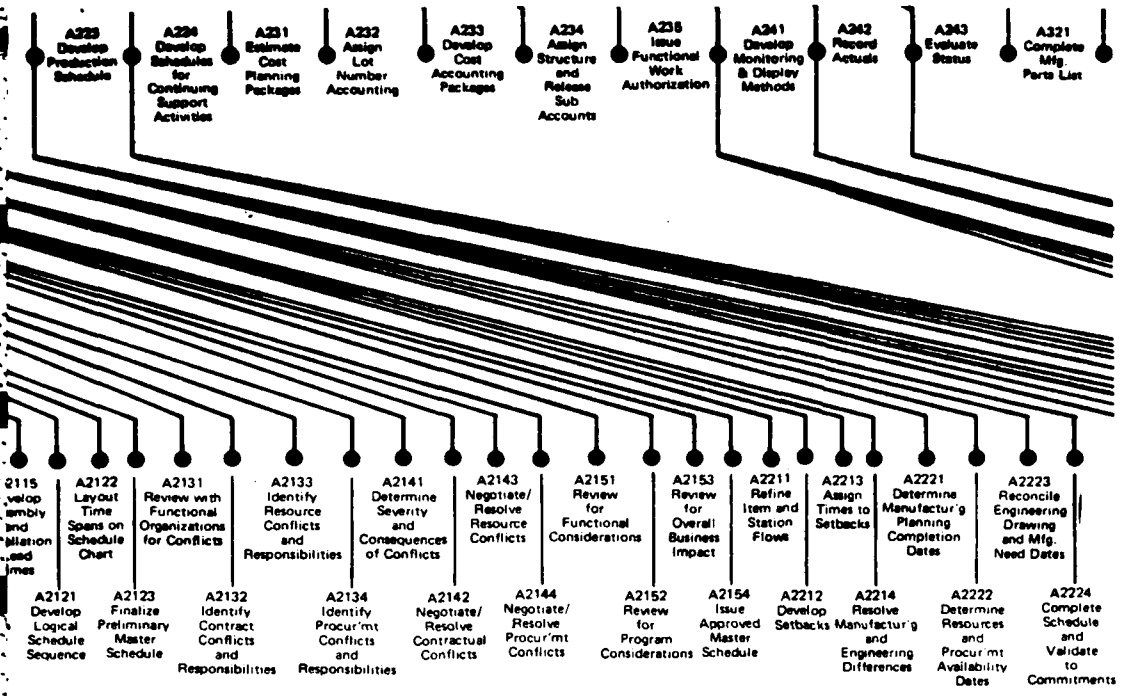
A223 Develop Production Schedule
A224 Develop Schedules for Continuing Support Activities
A231 Estimate Cost Planning Packages
A232 Assign Lot Number Accounting
A233 Develop Cost Accounting Packages
A234 Assign Structure and Release Sub Accounts
A235 Issue Functional Work Authorization
A241 Develop Monitoring & Display Methods
A242 Record Actuals
A243 Evaluate Status
A321 Complete Mfg. Parts List
A2115 Develop Assembly and Installation Need Times
A2121 Develop Logical Schedule Sequence
A2122 Layout Time Spans on Schedule Chart
A2123 Finalize Preliminary Master Schedule
A2131 Review with Functional Organizations for Conflicts
A2132 Identify Contract Conflicts and Responsibilities
A2133 Identify Resource Conflicts and Responsibilities
A2134 Identify Procur'mt Conflicts and Responsibilities
A2141 Determine Severity and Consequences of Conflicts
A2142 Negotiate/ Resolve Contractual Conflicts
A2143 Negotiate/ Resolve Resource Conflicts
A2144 Negotiate/ Resolve Procur'mt Conflicts
A2151 Review for Functional Considerations
A2152 Review for Program Considerations
A2153 Review for Overall Business Impact
A2154 Issue Approved Master Schedule
A2211 Refine Item and Station Flows
A2212 Develop Setbacks
A2213 Assign Times to Setbacks
A2214 Resolve Manufactur'g and Engineering Differences
A2221 Determine Manufactur'g Planning Completion Dates
A2222 Determine Resources and Procur'mt Availability Dates
A2223 Reconcile Engineering Drawing and Mfg. Need Dates
A2224 Complete Schedule and Validate to Commitments

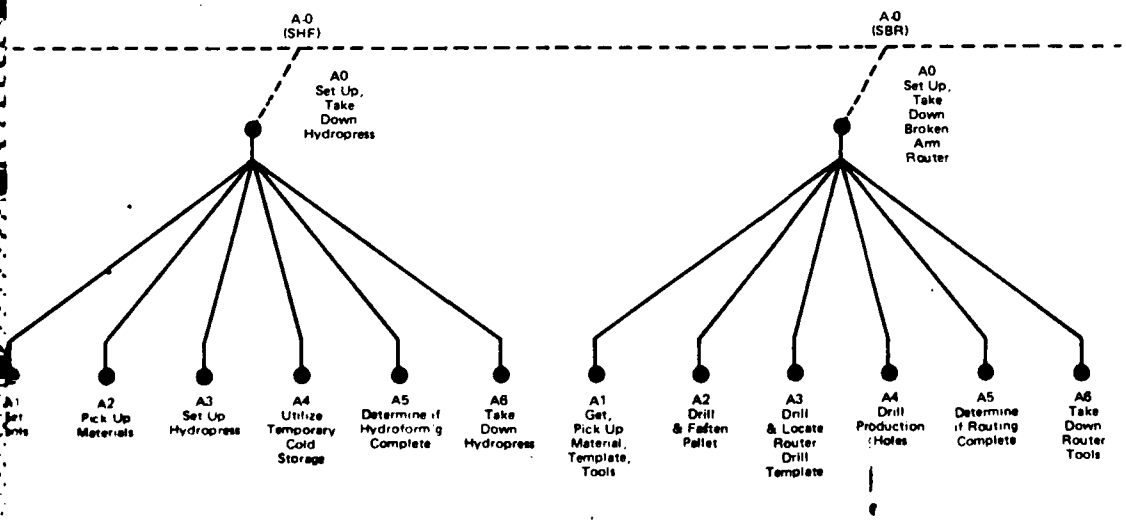
A-0 (SHF)
A0 Set Up, Take Down Hydropress
A1 Get Parts
A2 Pick Up Materials
A3 Set Up Hydropress
A4 Utilize Temporary Cold Storage
A5 Determine if Hydroform'g Complete
A6 Take Down Hydropress
A-0 (SBR)
A0 Set Up, Take Down Broken Arm Router
A1 Get, Pick Up Material, Template, Tools
A2 Drill & Fasten Pallet
A3 Drill & Locate Router Drill Template
A4 Drill Production Holes
A5 Determine if Routing Complete
A6 Take Down Router Tools

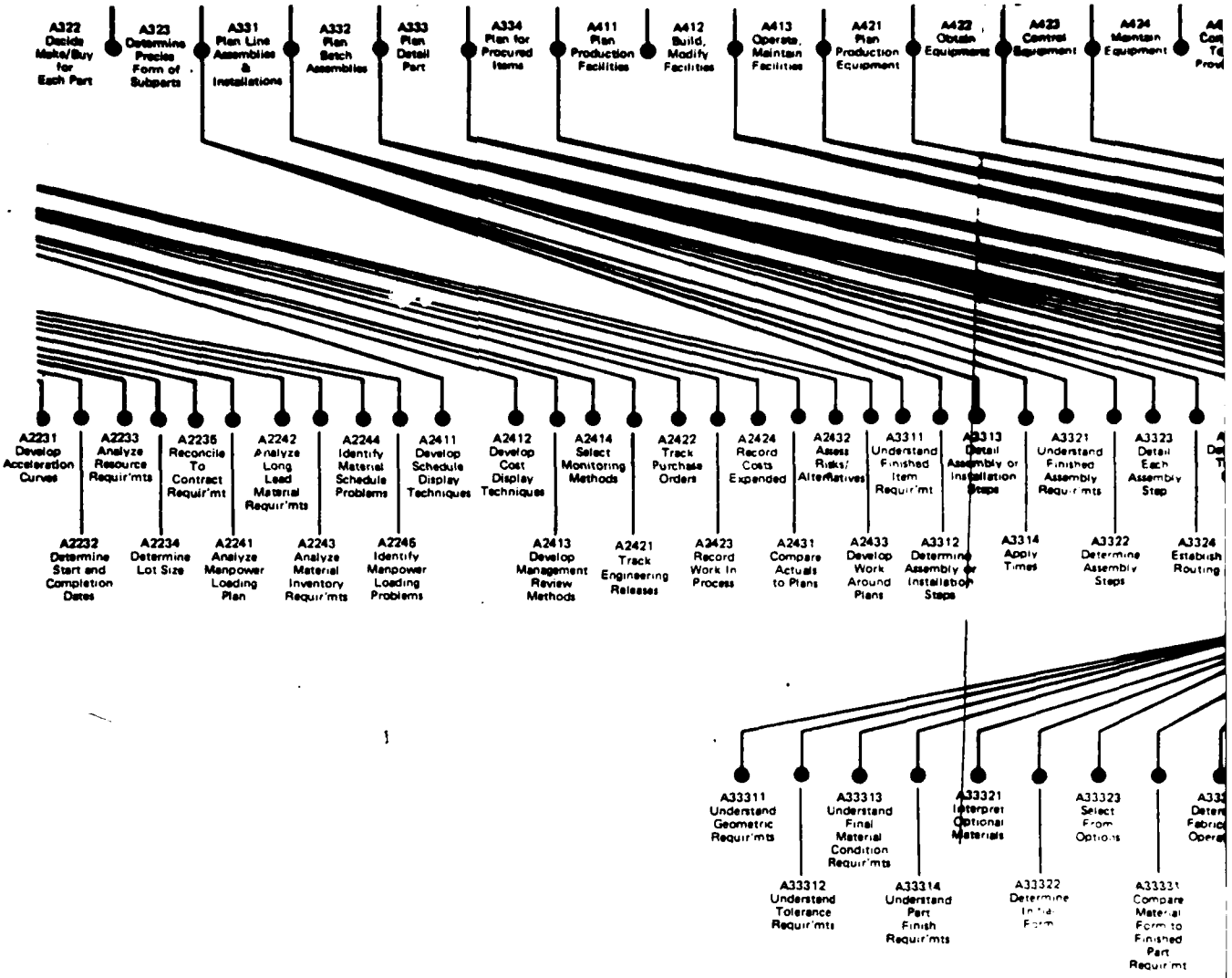
A322 Decide Make/Buy for Each Part
A323 Determine Precise Form of Subparts
A331 Plan Line Assemblies & Installations
A332 Plan Batch Assemblies
A333 Plan Detail Part
A334 Plan for Procured Items
A411 Plan Production Facilities
A412 Build, Modify Facilities
A413 Operate, Maintain Facilities
A421 Plan Production Equipment
A422 Obtain Equipment
A423 Control Equipment
A424 Maintain Equipment
A2231 Develop Acceleration Curves
A2232 Determine Start and Completion Dates
A2233 Analyze Resource Requir'mts
A2234 Determine Lot Size
A2235 Reconcile To Contract Requir'mt
A2241 Analyze Manpower Loading Plan
A2242 Analyze Long Lead Material Requir'mts
A2243 Analyze Material Inventory Requir'mts
A2244 Identify Material Schedule Problems
A2245 Identify Manpower Loading Problems
A2411 Develop Schedule Display Techniques
A2412 Develop Cost Display Techniques
A2413 Develop Management Review Methods
A2414 Select Monitoring Methods
A2421 Track Engineering Releases
A2422 Track Purchase Orders
A2423 Record Work In Process
A2424 Record Costs Expended
A2431 Compare Actuals to Plans
A2432 Assess Risks/ Alternatives
A2433 Develop Work Around Plans
A3311 Understand Finished Item Requir'mt
A3312 Determine Assembly or Installation Steps
A3313 Detail Assembly or Installation Steps
A3314 Apply Times
A3321 Understand Finished Assembly Requir'mts
A3322 Determine Assembly Steps
A3323 Detail Each Assembly Step
A3324 Establish Routing
A33311 Understand Geometric Requir'mts
A33312 Understand Tolerance Requir'mts
A33313 Understand Final Material Condition Requir'mts
A33314 Understand Part Finish Requir'mts
A33321 Interpret Optional Materials
A33322 Determine Initial Form
A33323 Select From Options
A33331 Compare Material Form to Finished Part Requir'mt
A-0 (SSH)
A0 Set Up, Take Down for Shear Process
A1 Get Tools
A2 Pick Up Materials
A3 Set Shear Stops
A4 Determine if Shearing Complete
A5 Take Down Shear
A-0 (FBF)
A0 Do Simple Brake Forming
A1 Load
A2 Brake Form
A3 Re-Hit
A4 Unload
A-0 (FPS)
A0 Do Pin Shaping
A1 Load Part, Template Assembly
A2 Start Spindle
A3 Feed Work Past Tool
A4 Stop Pin Shaper

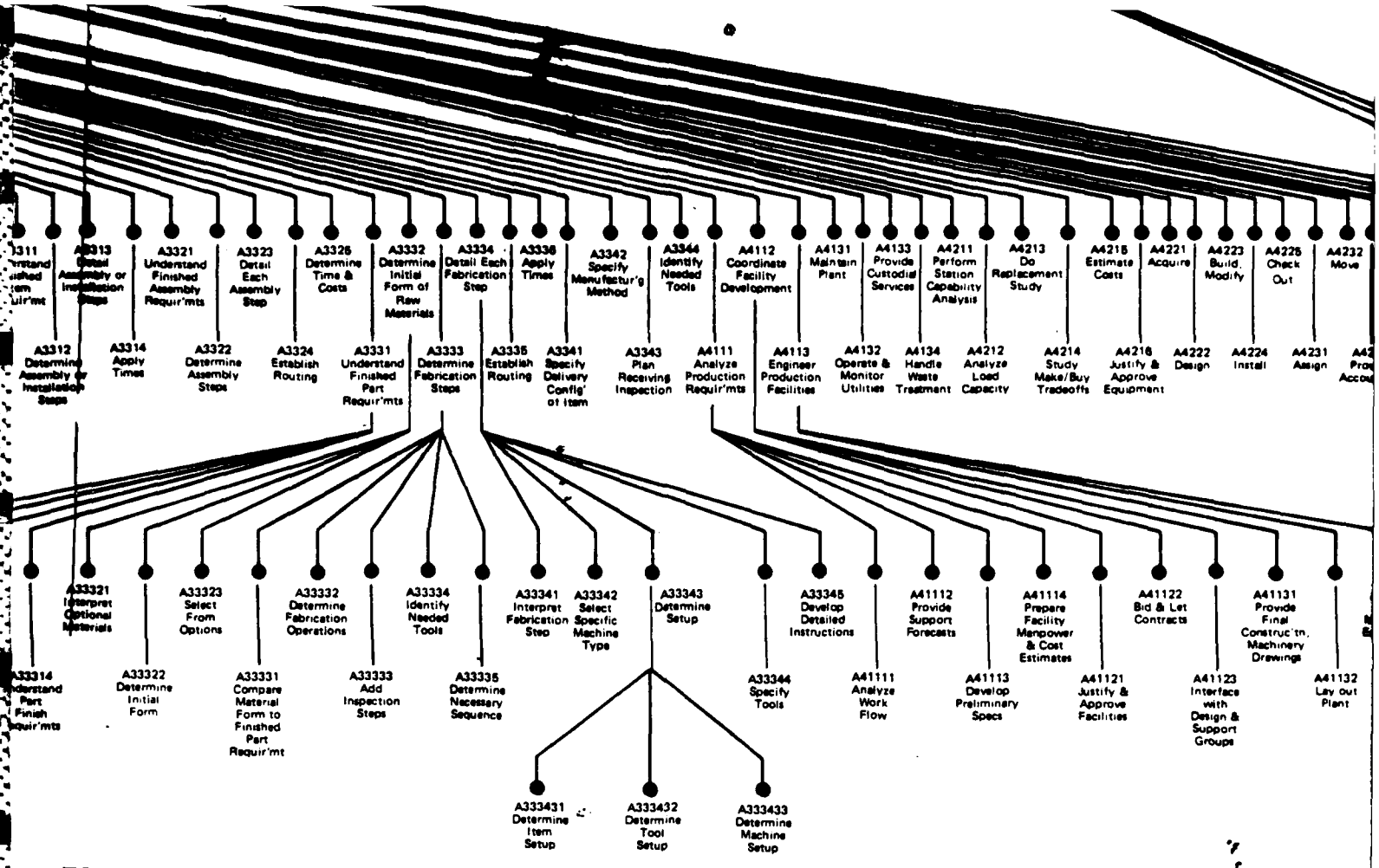
A3311 Understand Finished Item Requir'mt
A3313 Detail Assembly or Installation Steps
A3321 Understand Finished Assembly Requir'mts
A3323 Detail Each Assembly Step
A3326 Determine Time & Costs
A3332 Determine Initial Form of Raw Materials
A3334 Detail Each Fabrication Step
A3336 Apply Times
A3342 Specify Manufactur'g Method
A3344 Identify Needed Tools
A4112 Coordinate Facility Development
A4131 Maintain Plant
A4133 Provide Custodial Services
A4211 Perform Station Capability Analysis
A4213 Do Replacement Study
A4215 Estimate Costs
A4221 Acquire
A4223 Build, Modify
A4225 Check Out
A4232 Move
A3312 Determine Assembly or Installation Steps
A3314 Apply Times
A3322 Determine Assembly Steps
A3324 Establish Routing
A3331 Understand Finished Part Requir'mts
A3333 Determine Fabrication Steps
A3335 Establish Routing
A3341 Specify Delivery Config' of Item
A3343 Plan Receiving Inspection
A4111 Analyze Production Requir'mts
A4113 Engineer Production Facilities
A4132 Operate & Monitor Utilities
A4134 Handle Waste Treatment
A4212 Analyze Load Capacity
A4214 Study Make/Buy Tradeoffs
A4216 Justify & Approve Equipment
A4222 Design
A4224 Install
A4231 Assign
A3314 Understand Part Finish Requir'mts
A33321 Interpret Optional Materials
A33322 Determine Initial Form
A33323 Select From Options
A33331 Compare Material Form to Finished Part Requir'mt
A33332 Determine Fabrication Operations
A33333 Add Inspection Steps
A33334 Identify Needed Tools
A33335 Determine Necessary Sequence
A33341 Interpret Fabrication Step
A33342 Select Specific Machine Type
A33343 Determine Setup
A333431 Determine Item Setup
A333432 Determine Tool Setup
A333433 Determine Machine Setup
A33344 Specify Tools
A33345 Develop Detailed Instructions
A41111 Analyze Work Flow
A41112 Provide Support Forecasts
A41113 Develop Preliminary Specs
A41114 Prepare Facility Manpower & Cost Estimates
A41121 Justify & Approve Facilities
A41122 Bid & Let Contracts
A41123 Interface with Design & Support Groups
A41131 Provide Final Construc'tn, Machinery Drawings
A41132 Lay out Plant
A-0 (FPS)
A0 Do Pin Shaping
A2 Start Spindle
A3 Feed Work Past Tool
A4 Stop Pin Shaper
A5 Unload Part Template Assembly
A-0 (FHF)
A0 Do Hydroform'g
A1 Load & Position Details
A2 Position Cap, Pad, Wiper Block
A3 Press
A4 Remove Padding, & Unload
A31 Feed Table Under Press
A32 Apply Normal Press Stroke
A33 Apply Controlled Pressure
A34 Apply Repeated Partial Stroke
A35 Retract Table
A-0 (FBR)
A0 Do Broken Arm Routing
A1 Fasten Router Board
A2 Rout Part
A3 Unload Routed Parts
A-0 (FSH)
A0 Do Shear Process
A1 Load & Orient Material on Table
A2 Position Material Against Stops
A3 Activate Shear
A4 Unload Strips
2
3

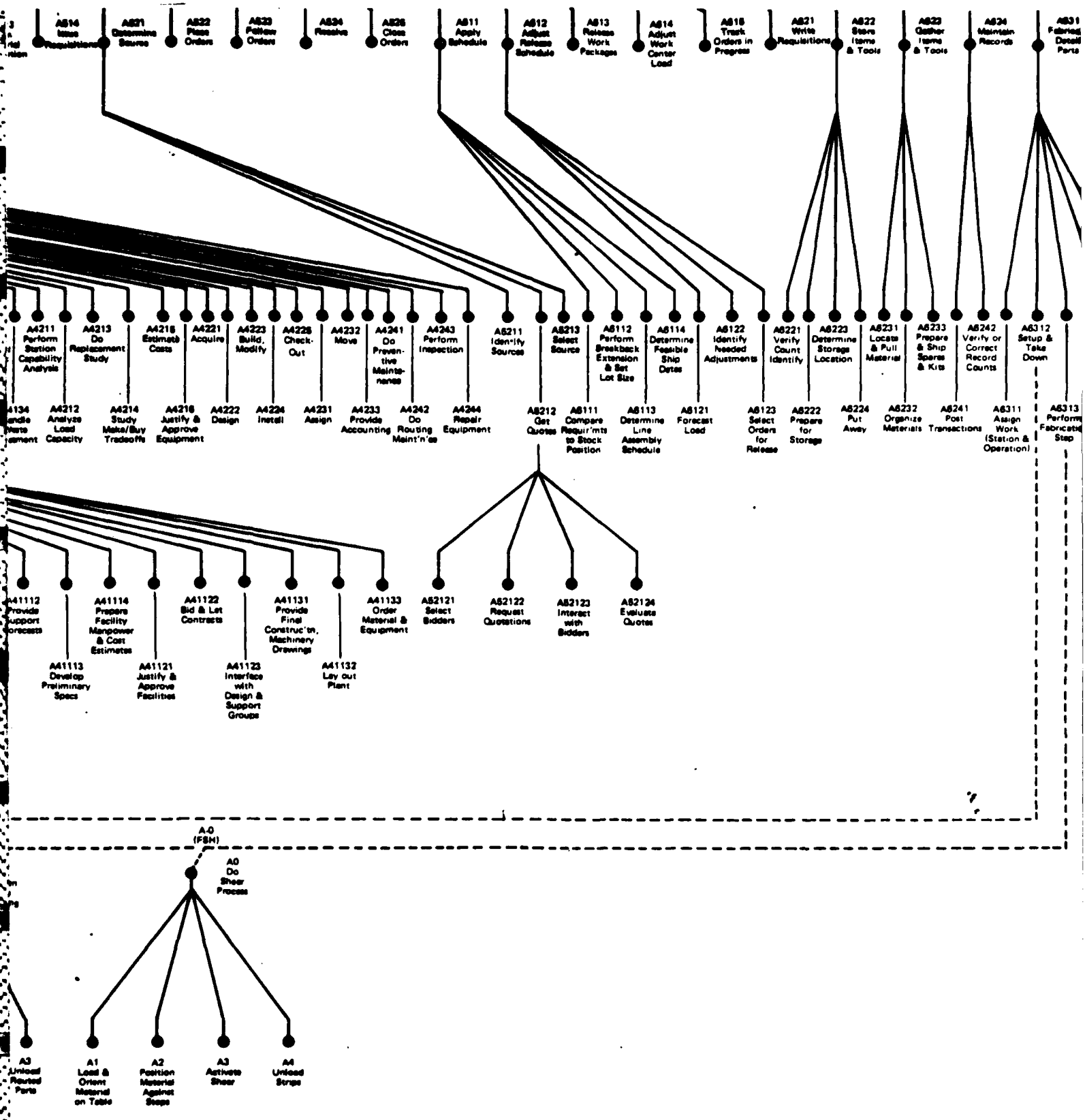
A611 Apply Schedule
A612 Adjust Release Schedule
A613 Release Work Packages
A614 Adjust Work Center Load
A615 Track Orders in Progress
A621 Write Requisitions
A622 Store Items & Tools
A623 Gather Items & Tools
A624 Maintain Records
A631 Fabricate Detail Parts
A4211 Perform Station Capability Analysis
A4213 Do Replacement Study
A4215 Estimate Costs
A4221 Acquire
A4223 Build, Modify
A4225 Check-Out
A4232 Move
A4241 Do Preventive Maintenance
A4243 Perform Inspection
A6211 Identify Sources
A6213 Select Source
A6112 Perform Breakback Extension & Set Lot Size
A6114 Determine Feasible Ship Dates
A6122 Identify Needed Adjustments
A6221 Verify Count Identify
A6223 Determine Storage Location
A6231 Locate & Pull Material
A6233 Prepare & Ship Spares & Kits
A6242 Verify or Correct Record Counts
A6312 Setup & Take Down
A4212 Analyze Load Capacity
A4214 Study Make/Buy Tradeoffs
A4216 Justify & Approve Equipment
A4222 Design
A4224 Install
A4231 Assign
A4233 Provide Accounting
A4242 Do Routing Maint'n'ce
A4244 Repair Equipment
A6212 Get Quotes
A6111 Compare Requir'mts to Stock Position
A6113 Determine Line Assembly Schedule
A6121 Forecast Load
A6123 Select Orders for Release
A6222 Prepare for Storage
A6224 Put Away
A6232 Organize Materials
A6241 Post Transactions
A6311 Assign Work (Station & Operation)
A6313 Perform Fabricate Step
A41112 Provide Support Forecasts
A41113 Develop Preliminary Specs
A41114 Prepare Facility Manpower & Cost Estimates
A41121 Justify & Approve Facilities
A41122 Bid & Let Contracts
A41123 Interface with Design & Support Groups
A41131 Provide Final Construc'tn, Machinery Drawings
A41132 Lay out Plant
A41133 Order Material & Equipment
A62121 Select Bidders
A62122 Request Quotations
A62123 Interact with Bidders
A62124 Evaluate Quotes
A-0 (FSH)
A0 Do Shear Process
A3 Unload Routed Parts
A1 Load & Orient Material on Table
A2 Position Material Against Stops
A3 Activate Shear
A4 Unload Strips

FTR110410000U
8 September 1984

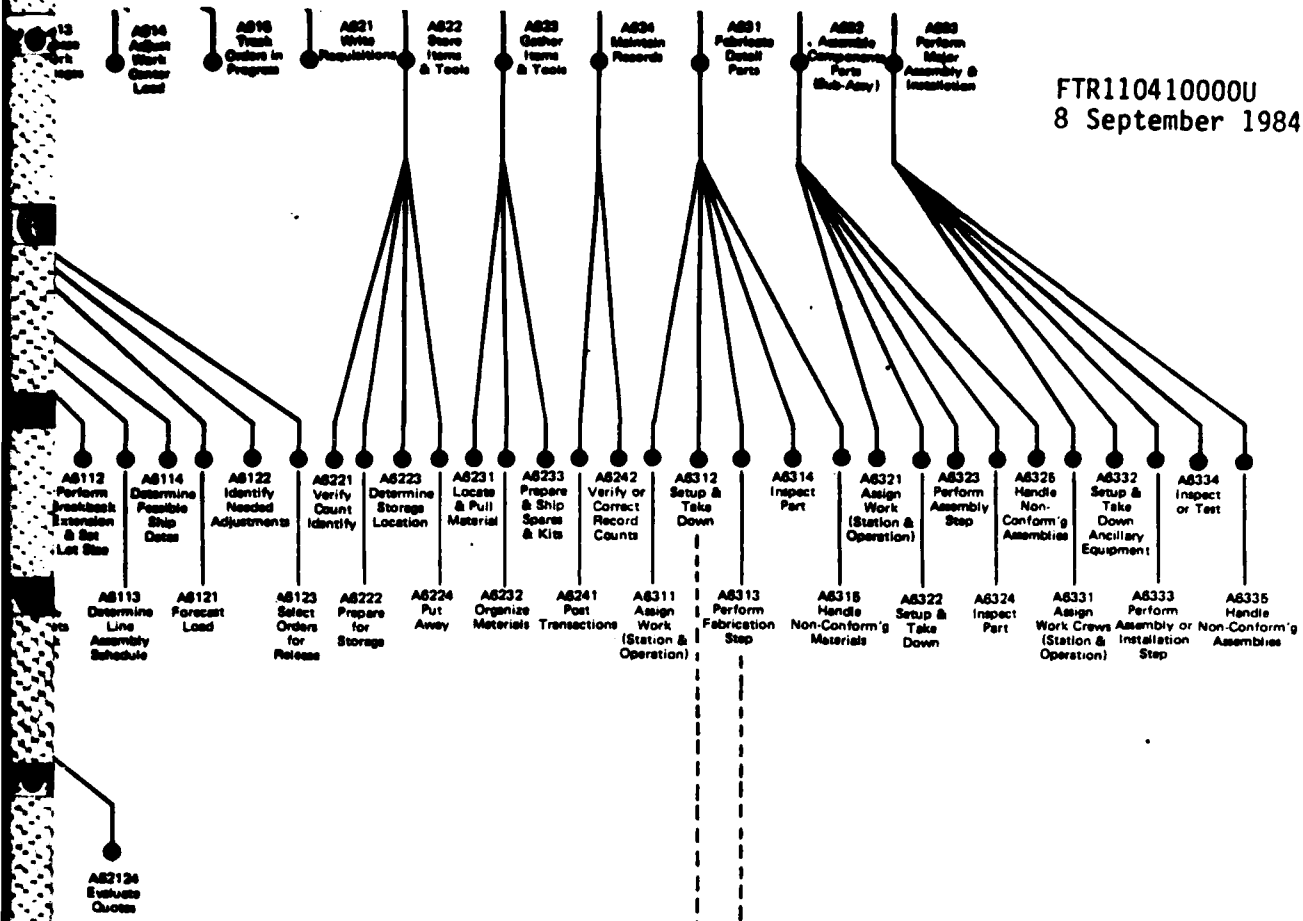

EXTENSIONS
TO
ARCHITECTURE

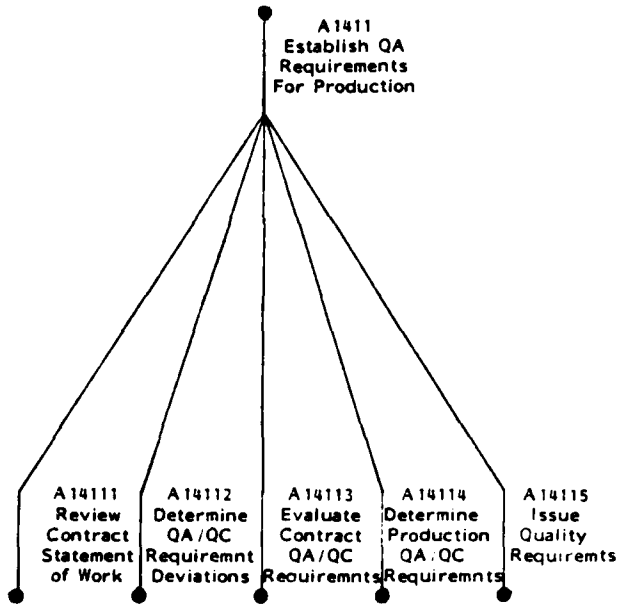
A1411
Establish QA
Requirements
For Production
A14111
Review
Contract
Statement
of Work
A14112
Determine
QA/QC
Requiremnt
Deviations
A14113
Evaluate
Contract
QA/QC
Requiremnts
A14114
Determine
Production
QA/QC
Requiremnts
A14115
Issue
Quality
Requiremts

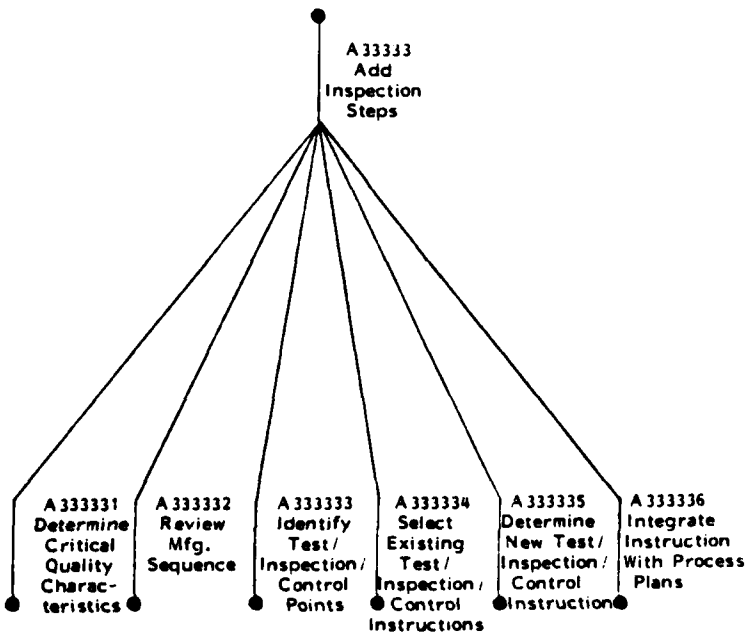
A33333
Add
Inspection
Steps
A333331
Determine
Critical
Quality
Charac-
teristics
A333332
Review
Mfg.
Sequence
A333333
Identify
Test/
Inspection/
Control
Points
A333334
Select
Existing
Test/
Inspection/
Control
Instructions
A333335
Determine
New Test/
Inspection/
Control
Instruction
A333336
Integrate
Instruction
With Process
Plans

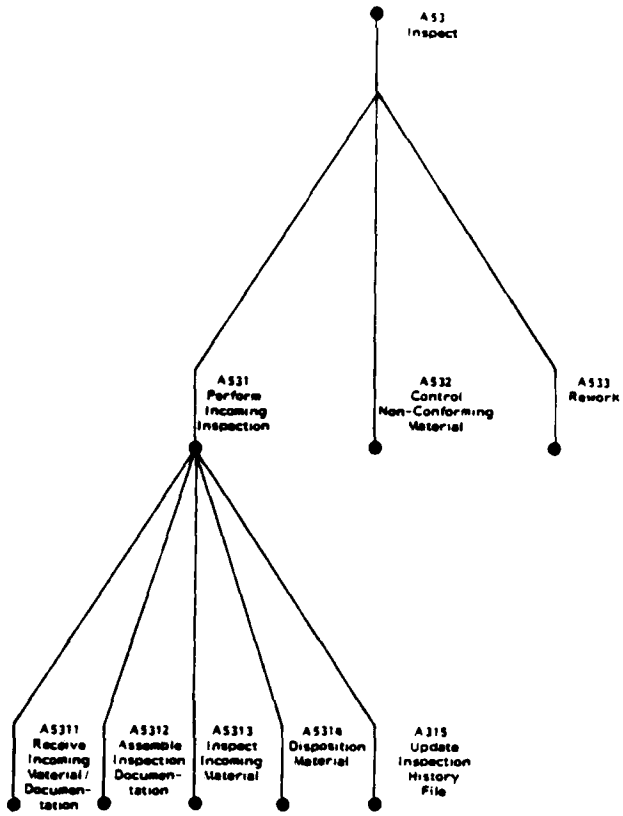
A53
Inspect
A531
Perform
Incoming
Inspection
A532
Control
Non-Conforming
Material
A533
Rework
A5311
Receive
Incoming
Material/
Documen-
tation
A5312
Assemble
Inspection
Documen-
tation
A5313
Inspect
Incoming
Material
A5314
Disposition
Material
A315
Update
Inspection
History
File

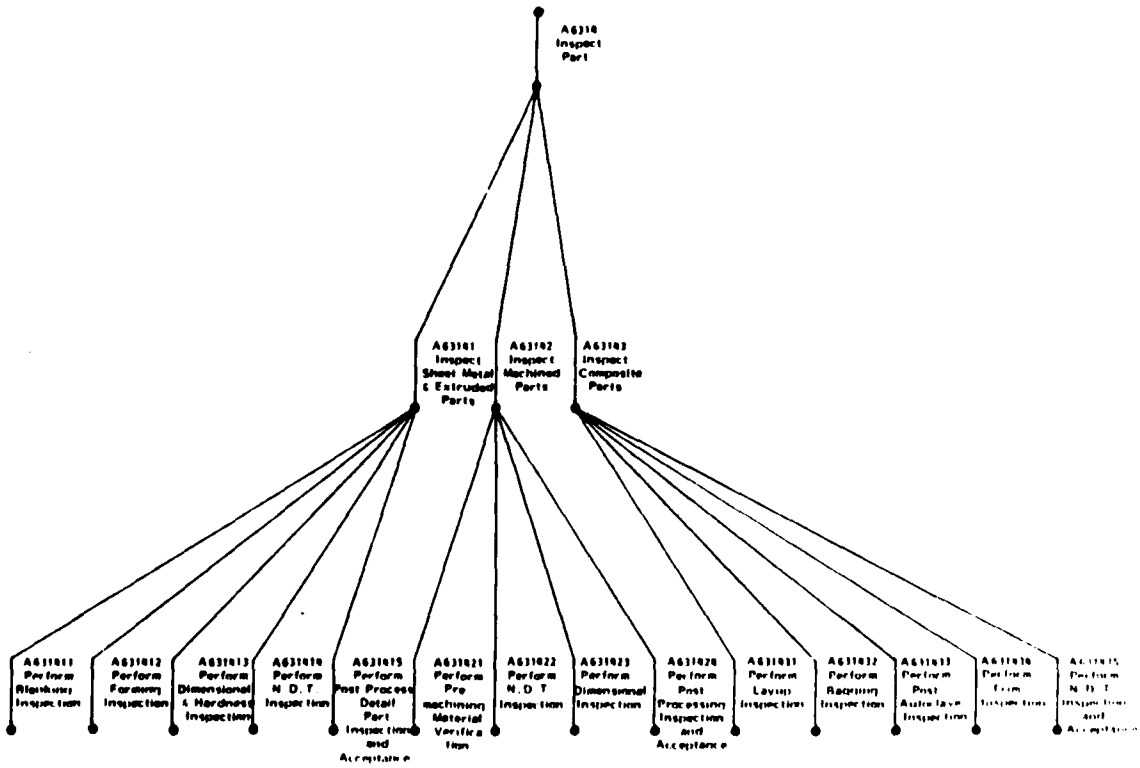
A6318
Inspect
Part
A63181
Inspect
Sheet Metal
& Extruded
Parts
A63182
Inspect
Machined
Parts
A63183
Inspect
Composite
Parts
A631811
Perform
Blankout
Inspection
A631812
Perform
Forming
Inspection
A631813
Perform
Dimensional
& Hardness
Inspection
A631814
Perform
N.D.T.
Inspection
A631815
Perform
Post Process
Detail
Part
Inspection
and
Acceptance
A631821
Perform
Pre
machining
Material
Verifica
tion
A631822
Perform
N.D.T
Inspection
A631823
Perform
Dimensional
Inspection
A631826
Perform
Post
Processing
Inspection
and
Acceptance
A631831
Perform
Layup
Inspection
A631832
Perform
Bagging
Inspection
A631833
Perform
Post
Autoclave
Inspection

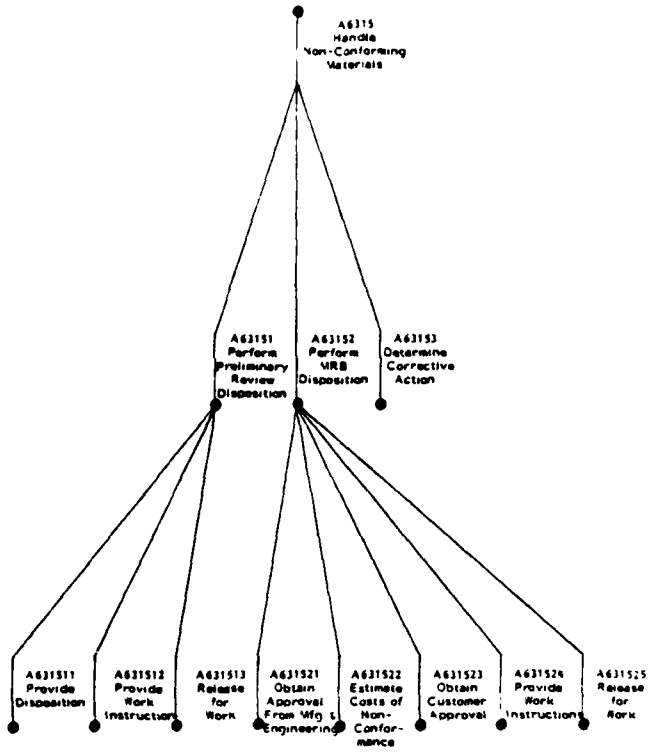
A6315
Handle
Non-Conforming
Materials
A63151
Perform
Preliminary
Review
Disposition
A63152
Perform
MRB
Disposition
A63153
Determine
Corrective
Action
A631511
Provide
Disposition
A631512
Provide
Work
Instructions
A631513
Release
for
Work
A631521
Obtain
Approval
From Mfg &
Engineering
A631522
Estimate
Costs of
Non-
Confor-
mance
A631523
Obtain
Customer
Approval
A631524
Provide
Work
Instructions
A631525
Release
for
Work

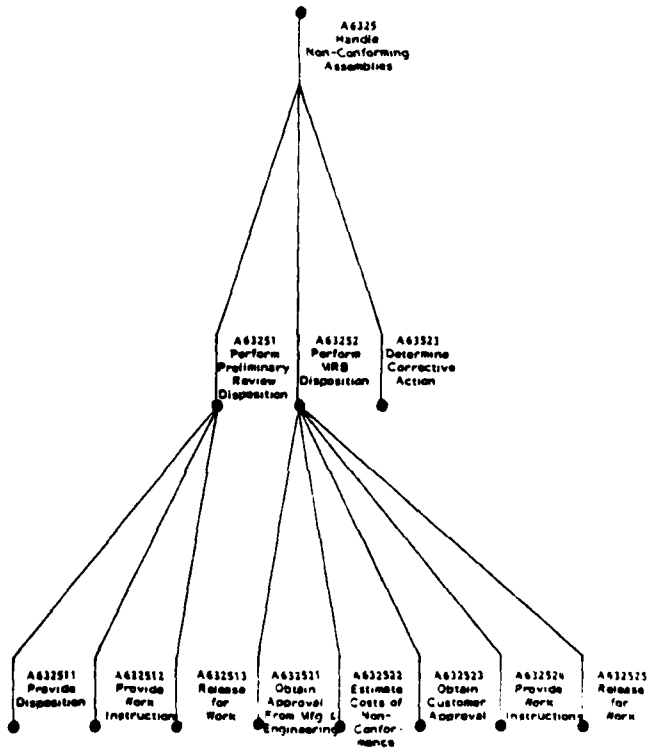
A6325
Handle
Non-Conforming
Assemblies
A63251
Perform
Preliminary
Review
Disposition
A63252
Perform
MRB
Disposition
A63253
Determine
Corrective
Action
A632511
Provide
Disposition
A632512
Provide
Work
Instructions
A632513
Release
for
Work
A632521
Obtain
Approval
From Mfg &
Engineering
A632522
Estimate
Costs of
Non-
Confor-
mance
A632523
Obtain
Customer
Approval
A632524
Provide
Work
Instructions
A632525
Release
for
Work

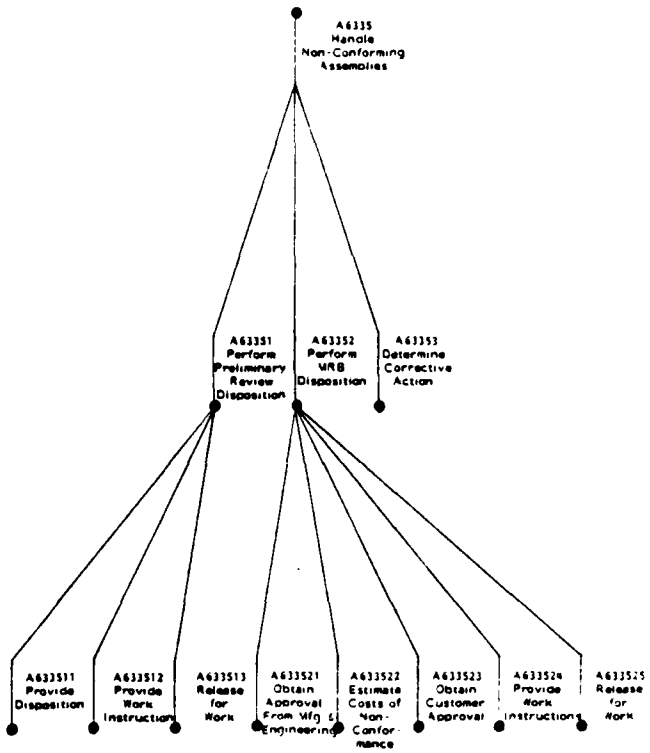
A6335
Handle
Non-Conforming
Assemblies
A63351
Perform
Preliminary
Review
Disposition
A63352
Perform
MRB
Disposition
A63353
Determine
Corrective
Action
A633511
Provide
Disposition
A633512
Provide
Work
Instruction
A633513
Release
for
Work
A633521
Obtain
Approval
From Mfg &
Engineering
A633522
Estimate
Costs of
Non-
Conformance
A633523
Obtain
Customer
Approval
A633524
Provide
Work
Instructions
A633525
Release
for
Work

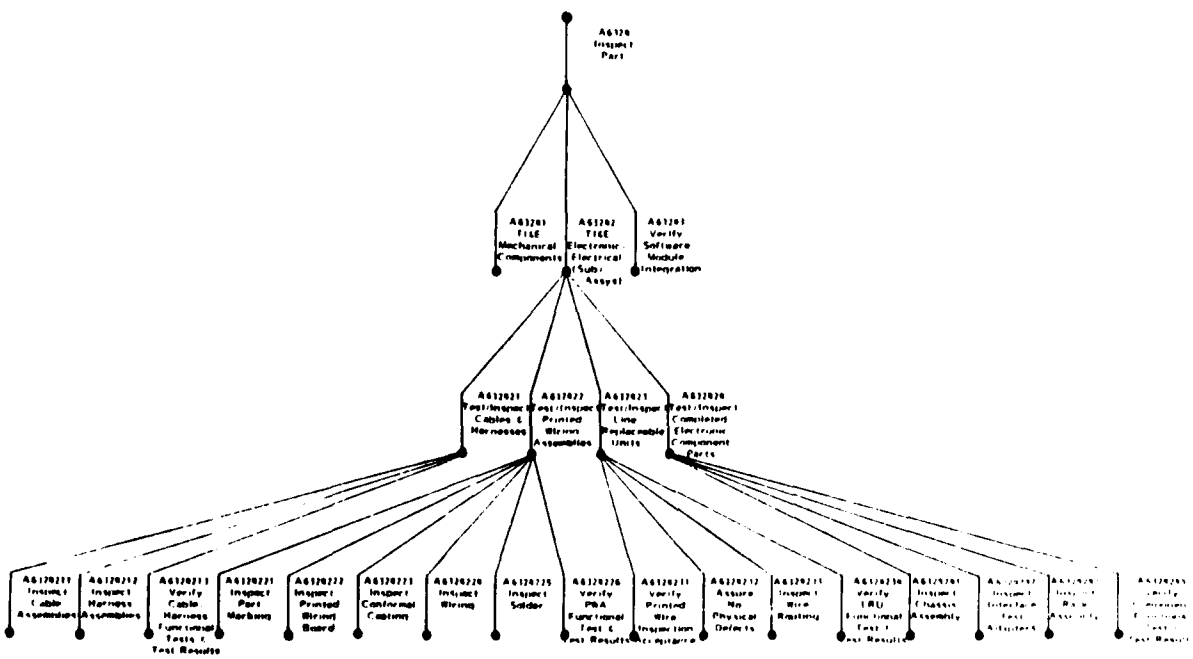
Inspect
Part
Mechanical
Components
Electronic
Electrical
Sub-
Assyst
Verify
Software
Module
Integration
Cables &
Harnesses
Printed
Wiring
Assemblies
Line
Replaceable
Units
Electronic
Component
Parts
Inspect
Harness
Assemblies
Verify
Cable
Harness
Functional
Tests &
Test Results
Inspect
Part
Marking
Inspect
Printed
Wiring
Board
Inspect
Conformal
Coating
Inspect
Wiring
Inspect
Solder
Verify
PWA
Functional
Test &
Test Results
Verify
Printed
Wire
Inspection
Assurance
Assure
No
Physical
Defects
Inspect
Wire
Routing
Verify
LRU
Functional
Test &
Test Results
Inspect
Chassis
Assembly

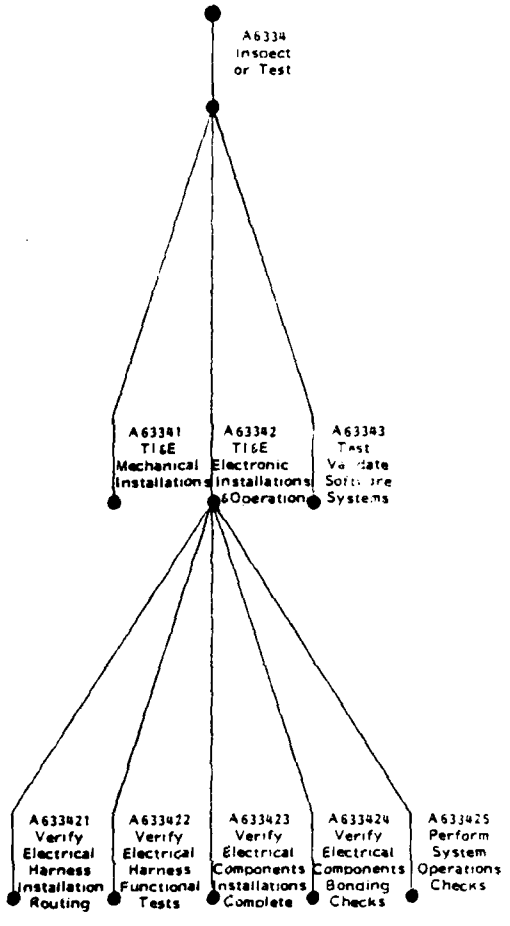

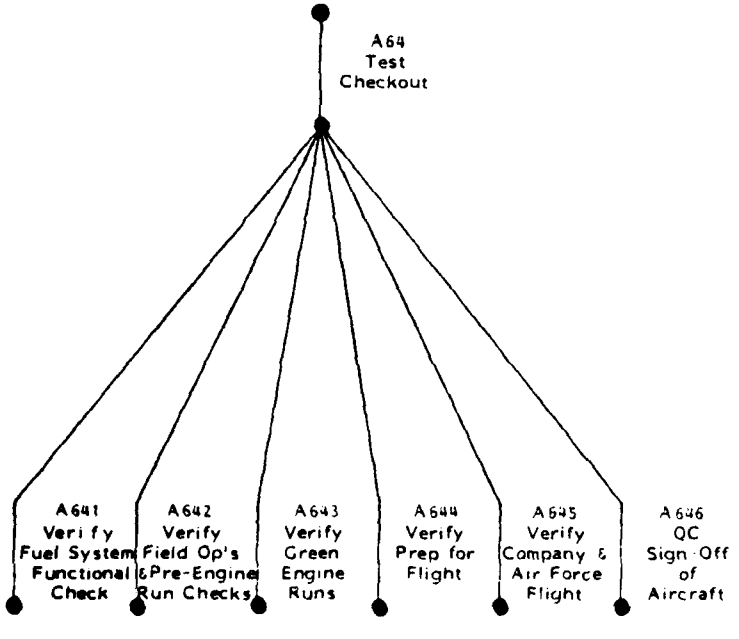

☆ U.S. GOVERNMENT PRINTING OFFICE