AD-A141 740 JOURNAL OF REHABILITATION RESEARCH AND DEVELOPMENT(U) 1/2
VETERANS ADMINISTRATION WASHINGTON D C MAY 84

UNCLASSIFIED F/G 6/5 NL

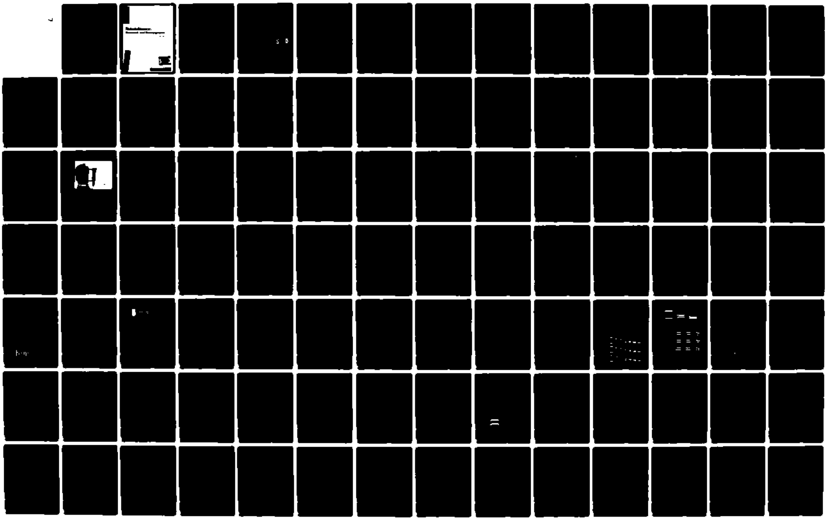

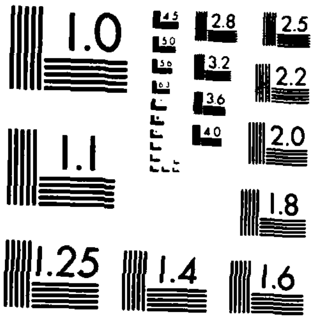

MICROCOPY RESOLUTION TEST CHART
NATIONAL BUREAU OF STANDARDS-1963-A

Veterans
Administration

Journal of
Rehabilitation
Research and Development

MAY 1984

Department of Medicine
and Surgery
Rehabilitation R&D
Service

REPRINTS

Each named author will be furnished with 50 complimentary reprints at the time of publication of the paper in the Journal of Rehabilitation Research and Development.

Additional copies will be furnished wherever possible free of charge, in bulk or mailed to designated addresses, in response to brief written requests presenting plans for their use in disseminating scientific findings.

Authors may also simply request additional tear sheets or reproduction proofs for use in having reprints produced locally.

Distribution CO: (00) (001) (036) (036A2) (20) (22) (222)
SS (153) (02) (024) (025) (06) (08L8) (93) (10) (10A)
SSD (101B2) (106) (107) (10A4) (10A42) (10B)
(10BB) (10B3) (11) (11A) (11B) (11C) (112)
(117) (121) (123) (124) (126) (127) (128)
(129) (13) (132) (14) (142D) (145) (15)
(15A) (151) (152) (16) (17) (18) — 1 copy
FLD HA, DO, OC, OCRO — in varying quantities
EX P DI

Journal of Rehabilitation Research and Development

For sale by the Superintendent of Documents, U.S.
Government Printing Office
Washington, D.C. 20402
Stock Number 051-000-00166-4
Available in microfilm
from University Microfilms International, Inc.

PAPER REVIEW INFORMATION

All scientific papers submitted to the Journal of Rehabilitation R&D are reviewed by at least three (and usually *more*) reviewers. These may be members of the Editorial Board, ad hoc reviewers, or from both categories. Results of reviews are communicated to the senior author without disclosing the identities of the reviewers. (Reviewers are not provided with names of the authors or their institutions, etc.) The editorial staff may also make suggestions and offer comments to authors.

INDEXING OF ARTICLES

The Journal of Rehabilitation R&D is indexed by:

- Engineering Index (Bioengineering Abstracts)
- Excerpta Medica
- Index Medicus
- The BLDOC System (French)
- Index to U.S. Government Periodicals (Infordata Int., Inc.)

Veterans Administration
Department of Medicine
and Surgery
Washington DC 20420

Journal of
Rehabilitation Research and Development
May 1984

Veterans
Administration

Journal of Rehabilitation Research and Development

VOLUME 21, No. 1 (BPR 10-39)

The Journal of Rehabilitation Research and Development is a publication of The Rehabilitation R&D Service, Department of Medicine and Surgery, Veterans Administration

PUBLICATION STAFF
Seldon P. Todd, Jr., Editor
Tamara T. Sowell, Associate Editor
Stanley Daly, Jr., Managing Editor
Ronald H. Coon, Assistant Managing Editor
Erin Thomas, Assistant Managing Editor
Medical Consultant: Jacquelin Perry, M.D.
Technical Consultants: Howard Freiberger, A.M.
Leon Bennett, M.A.E.

Technical Information Specialist:
Lily W. Hom, M.L.S., M.S.
Administration & Finance:
Samuel Greenwald, B.B.A.

Circulation Department:
Clifton O. Johnson

Address correspondence to Editor, Journal of Rehabilitation Research and Development, Office of Technology Transfer (153D), 252 Seventh Avenue, New York, N.Y. 10001

Library of Congress Catalog Card No. 6.60273. **ISSN 007-506X**

CONTENTS

Journal of Rehabilitation Research
and Development, Vol. 21, No. 1
BPR 10-39, pages 2 and 3

AN EDITORIAL

Research on What?

**SELDON P. TODD, JR.,
TAMARA T. SOWELL**

It has been said since ancient times: "Necessity is the mother of invention." To what extent have the real needs of individuals with disabilities actually defined the agendas of professional researchers working in the rehabilitation field? Are these needs doing what they are supposed to do—are they actually giving birth to new methods and devices useful to and valued by individuals with handicapping conditions? Surely they do it some of the time, but an informal tour of several organizations receiving government "handicapped" R&D funds revealed that a number of the products of research and development are simply not being used. Is this because the "necessity" referred to above is one step removed in the case of R&D—where the scientist's necessity is somehow different from the necessity faced by an individual with handicaps? The answer is, partly, yes. A scientist's "necessity" is defined by a complex calculus of factors which include his or her background and interests, estimated probability of success, available resources (e.g. patient case load), funding availability, what is likely to be published, personal interest, a sense of significance of anticipated results, etc.

Investigation shows that, to date, "necessity" has been far less clear to professionals one step removed from disabilities than to the disabled themselves. This lack of clarity has not been limited to researchers but includes government funding agencies as well. To say this is not to indict researchers or government officials, but is rather a statement of the importance of all professionals choosing research topics having objective data on the true needs of individuals with disabilities.

Unfortunately, such data are scarce, and therefore this Journal will place continuing emphasis on the development and publication of articles that present objective data on real unresolved problems of real handicapped individuals, such as Hoaglund et al., "Evaluation of Problems and Needs of Veteran Lower-Limb Amputees," published in our last issue (Vol. 20, No. 1, July 1983).

Other past and current efforts to pin down the real needs of the disabled are worth considering.

In 1976, the Committee on Prosthetics Research in the Veterans Administration, the Assembly of Life Sciences, the National Research Council, and the National Academy of Sciences, Washington, D.C., prepared a joint report on specific areas where research was needed in classical prosthetics/orthotics and mobility devices. Research needs identified include sensory feedback devices embedded in upper-limb prostheses, prosthetic skin, and voluntary control of a prosthesis by an above-knee amputee. Mobility devices included the need for curb-and-stair-climbing wheelchairs.

Almost eight years later, these specific needs have not been met.

More recently, in an effort to link research more effectively with the true needs of the handicapped, Margaret J. Giannini, M.D., the Director of the VA Rehabilitation Research and Development Service, has joined in the sponsorship of "state-of-the-art workshops" in partnership with the Institute of Handicapped Research (NIHR), Rehabilitation Engineering Society of North America (RESNA), Paralyzed Veterans of America (PVA), and the Disabled American Veterans (DAV). Subjects of these workshops included Functional Electrical Stimulation (October 12–13, 1982, Washington, D.C.), Wheelchair III (March 25–27, 1982, San Diego, Ca.), Blindness I (May 6–7, 1982, Palo Alto, Ca.); Blindness and Vision (May 25–26, 1982, Washington, D.C.); Audiology and Speech Pathology (February 16–17, 1983, San Francisco), and Prosthetics/Amputation (April 27–28, 1983 with followup June 2, 1983, Washington, D.C.).

Those workshops were designed to identify areas of research that have two characteristics. The first was that within each area will be found a significant unmet need of disabled veterans. Areas were also sought that would yield the most benefit in the shortest period of time to individuals with handicapping conditions, and an effort was to be made to define areas where significant headway is readily attainable.

The conferees or participants in each of these workshops were selected to include veterans with service-connected disabilities, representatives of service organizations, disabled consumers, leading researchers, officials from government and private organizations, health-care deliverers, and researchers and clinicians who have a comprehensive knowledge of existing practices and the current state of the art in respect to their own fields.

From these workshops, research and development priorities emerged which are useful in at least two ways: First, they provide investigators with information, based on the deliberations of leading national thinkers, about potential research that is both needed and likely to yield fruitful results. Second, they define areas for which funding can most readily be obtained from the VA Rehabilitation R&D Service.

R&D priorities emerged as follows:

PROSTHETICS/AMPUTATION (1) Lower-limb prostheses. (2) New and improved prostheses and orthoses. (3) Diagnostic and surgical procedures (including maxillofacial and dental prostheses). (4) Internal joints/ implant prosthetics.

SPINAL CORD INJURY (1) Surgical procedures. (2) Mobility (wheelchairs and automotive adaptive equipment). (3) Manipulative devices (environmental controls). (4) Neuromuscular control.

SENSORY AIDS (1) Blindness and visual impairment. (2) Deafness and hearing impairment. (3) Speech impairment. Three concurrent research programs are encouraged: low-vision aids, orientation and mobility, and communication/vocational rehabilitation.

For complete information on needs in the three research priority areas, you may request Research and Development Letters, DM&S IL 15-83-11, Priorities in Prosthetics/Amputation; IL 15-82-4, Priorities in Spinal Cord Injury; and IL 15-83-12, Priorities in Speech and Hearing Impairment. Write to: VACO, Rehabilitation Research and Development Service (153), 810 Vermont Avenue, N.W., Washington, D.C. 20420.

The VA continues to welcome input from the service organizations in a joint effort to establish overall national goals for individuals with handicapping conditions. We also invite volunteers, the private sector, and private industry to help us achieve the goals necessary to ensure a handicapped person a meaningful and equal place in an able-bodied world.

Extended Physiological Proprioception: A Pair of Articles

The following 27 pages hold two articles which describe the authors' research in the application of EPP to the control of an upper-limb prosthesis. The first explores the "practicality and potential effectiveness" of the concept as the basis for a control system. The second carries the research into the design, evaluation, and comparison of an experimental system.

The headings and subheadings of these two papers, presented below, provide a convenient index of the area covered by this important sequence of papers.

An Analysis of EPP As A Prosthesis-Control Technique

Design and Evaluation of A Prosthesis Control System Based on the Concept of EPP

Journal of Rehabilitation Research
and Development, Vol. 21, No. 1
BPR 10-39 pages 5—18

An Analysis of Extended Physiological Proprioception as a Prosthesis-Control Technique

JAMES A. DOUBLER, Ph.D. [a]
DUDLEY S. CHILDRESS, Ph.D.

Prosthetics Research Laboratory
Northwestern University
345 East Superior Street
Chicago, Illinois 60611

Abstract— This research was devoted to an investigation of the practicality and potential effectiveness of applying the concept of extended physiological proprioception (EPP) to the control of upper-limb prostheses. The purpose of this study was to verify that EPP control, implemented by coupling prosthesis function to residual shoulder motion in a position-servo relationship, could be effectively applied in multifunctional prostheses for shoulder disarticulation amputees. Although Simpson has shown that the principle works, the authors wanted to quantify its effectiveness and analyze its limitations.

Studies were performed analyzing the feasibility of using shoulder elevation-depression and protraction-retraction as prosthesis control inputs. The results of this study showed that a prosthesis mechanism with nonlimiting dynamic response characteristics and shoulder-activated EPP control of wrist rotation and elbow flexion/extension, exhibited functional characteristics comparable to those of the physiological elbow and wrist as defined by tracking capabilities. The results of this investigation also showed that shoulder-effected position control of prosthesis function has considerably more potential for providing effective control than similarly effected velocity control.

INTRODUCTION

It is generally felt that prosthesis control can most effectively be implemented by providing a man-prosthesis interface in which the signals pertaining to prosthesis operation are coded in physiological terms natural to the residual sensory and neuromuscular systems of the amputated limb (Childress (1), Mann (2), Simpson (3), Jerard and Jacobsen (4)). With the ideal interface, prosthesis control would be effected by the part of man's physiological system most naturally associated with the function restored.

This paper presents the results of an investigation to quantify the effectiveness of applying the concept of extended physiological proprioception (EPP) to the control of upper-limb prostheses. Extended physiological proprioception can be realized in prosthetic control through the use of a control technique in which the modalities of information-transfer across the man-prosthesis interface are similar to those associated with the control of the natural limb. The representation of motor intent by the amputee involves the same mental processes used in the control of the natural musculature, and proprioceptive and envi-

---

[a] Now with AT&T Bell Laboratories, Naperville, Illinois.

ronmental sensations are presented to the amputee in a naturally perceived manner. In undertaking this study it was hypothesized that EPP control has significant advantages for achieving effective and natural control of upper-limb prostheses, particularly in multifunctional applications. The purpose of this study was to gather data that would allow assessment of the advantages of the approach and that could reveal the potential of the control method. Practical applications have been indicative of its effectiveness but the authors wanted to conduct studies that investigated the approach in a quantitative manner.

EXTENDED PHYSIOLOGICAL PROPRIOCEPTION (EPP)

Conceptual Basis for EPP

The concept of extended physiological proprioception was formalized and proposed as a prosthesis control technique by D.C. Simpson (3,5), who reduced the concept to clinical practice in an elegant series of CO_2-powered prostheses for children. It implies that the manner in which a mechanical device is controlled or used can be such that the operator is able to perceive its static and dynamic characteristics through naturally arising proprioceptive sensations. By eliciting proprioceptive sensations, the device becomes an artificial extension of the operator, part of the functioning person. The feedback information may be fundamentally important in itself or important as a means of monitoring the activity of the device.

The manner in which a blind person uses a cane as a mobility aid is an excellent illustration of this concept. Information about the environment is coded in proprioceptive sensations arising in the extremity supporting the cane. Although transmitted by the cane, these sensations do not pertain only to the nature of the cane, but rather serve to describe aspects of the nature of the environment. Thus the cane serves as an extension of the blind person's existence, shifting outward the point at which contact is made with objects external to the person's being.

Another demonstration of extended physiological proprioception can be seen in the way a tennis player controls his racket. The position, velocity, and acceleration of the racket in space are directly related to the nature of the player's grip and the motion of his arm, information about which is available as proprioceptive sensations. As the player learns to associate this proprioceptive information with the dynamic aspects of racket performance, control of the racket becomes reflexive and subconscious.

EPP in Prosthesis Control

Simpson proposed that extended physiological proprioception could be realized in the control of externally powered prostheses by coupling prosthesis function to residual joint motion in a position-servo relationship where the input cannot 'beat''the output. With such a system, the position and movement of a prosthesis joint are at all times directly related to the position and movement of an anatomical joint, the anatomical joint being physically constrained to maintain a constant relationship between it and the prosthesis. The system is a position servomechanism in which the input is physically constrained by the output so that the input cannot get ahead of or fall behind the output, even temporarily.

With this control system, the modalities of the information pertaining to operation in both the forward and feedback control paths are similar to those associated with the control of the natural limb. By intimately linking the physiological joint position to the prosthesis joint position, the proprioceptive feedback mechanisms related to the control of the physiological joint may be directly associated with the operation of the prosthesis joint. As noted by Simpson (3), it seems unlikely that a more effective means can be found of communicating information pertaining to joint function to a person than by the physiological proprioceptive mechanisms. This inherent wealth of feedback information pertaining to operation is the primary factor that sets EPP control apart from the other approaches to prosthesis control.

While the preceding discussion has centered on the important feedback aspects of EPP control, it is also important to emphasize the appropriateness and potential effectiveness of the forward control path in such a system. Since the prosthesis joints are linked directly to physiological joints, the user generates motor commands to control the prosthesis that are similar in kind to those he would generate to control the physiological limb it replaces. This relationship takes on added significance relative to a fundamental hypothesis in motor control theory, which states that coordinated movements are not represented in the higher levels of the central nervous systems as joint-muscle schemata, but rather exist as topologically oriented engrams that can be translated into different joint-muscle sets (Bernstein (6)). For EPP control, this hypothesis implies that the prosthesis user would be able to naturally translate the control engrams for coordinated movements formerly performed by the missing extremity into topologically comparable movements of the joints now controlling prosthesis function. The prosthesis movements would therefore also exhibit the same topological organization, scaled by the EPP control mapping relationship between physiological joint input position and prosthesis joint output position.

Previous Implementations

Conventional cable-operated prostheses embody the concept of EPP control to a certain extent, particularly those for below-elbow amputees. The direct mechanical linkage between input and output provided by the Bowden control cable in below-elbow systems yields a position-servo type of relationship. A significant amount of feedback information that can be directly related to terminal device function is available to the amputee through proprioceptive and sensory input derived from cable operation and harness and socket pressures. Much of this direct feedback is lost, however, in prostheses for above-elbow and shoulder disarticulation amputees.

Simpson and co-workers (7,8,9) applied EPP control in upper-limb prostheses for children with thalidomide-induced bilateral amelia. They felt that one really effective prosthesis provided bilateral amputees with more useful function than two lesser systems. Acting on this premise, they developed a pneumatically-powered arm in which the positions of the two clavicles were used to control up to four degrees of freedom in a position-servo relationship. The four degrees of freedom included three polar coordinates specifying terminal device placement, and a rotational coordinate for terminal device orientation. If the actuator were restrained from moving, the corresponding clavicular movement was also restrained, maintaining shoulder position constant relative to the prosthesis. In that way, proprioceptive information derived from the shoulder girdle could always be accurately related to prosthesis operation. It was reported that the children who used those prostheses achieved a considerable degree of subconscious control and position awareness of the limb.

Carlson (10) applied EPP control to a pneumatically-powered elbow in a prosthesis for above-elbow amputees. In that system, the angle of elbow flexion was linearly related to the angle of humeral flexion. Carlson and co-workers (11,12) also developed an EPP controller for an electric elbow; with this system, elbow flexion was coupled to biscapular abduction. Excellent results were reported from laboratory tests of both systems. Smooth and precise control of prosthesis position and movement was reported, even with vision occluded.

INVESTIGATION OVERVIEW

It was originally hypothesized that EPP control derived from residual shoulder motion could be effectively applied in multifunctional prostheses for shoulder disarticulation amputees. To check this hypothesis, an investigation was performed analyzing the feasibility of using shoulder elevation-depression and protraction-retraction to control elbow flexion and wrist rotation in such a prosthesis.

As the initial step in the investigation, the ability of normal subjects to control physiological elbow flexion-extension and wrist pronation-supination was analyzed based on the performance in one-dimensional and two-dimensional random tracking experiments. Accepting the premise that the ultimate prosthesis will exhibit functional characteristics comparable to those of the natural limb it replaces, the results of these experiments served as optimal prosthesis-performance parameters.

Next, a study was performed analyzing the ability of subjects to control physiological shoulder elevation-depression and protraction-retraction as prosthesis control inputs. For this study, subjects performed one-dimensional and two-dimensional random tracking experiments using shoulder-effected position and velocity control of the tracking follower. Assuming a prosthesis with non-limiting dynamic characteristics that responds instantaneously to the control inputs, the results for shoulder-effected position control provide an indication of the performance that could theoretically be realized with EPP control. The tracking results for shoulder-effected velocity control allow a comparison to be made between the relative effectiveness of velocity control and EPP control.

After completing the hypothetical analysis, an experimental prosthesis was built for further evaluation of the concept and principles of EPP control. The experimental prosthesis utilized a shoulder-motion transduction mechanism in which direct cable linkages to the prosthesis components were used to implement EPP position-servo relationships between shoulder elevation-depression and prosthesis elbow flexion, and between shoulder protraction-retraction and prosthesis wrist rotation. The experimental prosthesis was evaluated by non-amputee subjects performing experimental tasks similar to those performed in the previous studies. In evaluating the prosthesis, task performance using EPP control was compared to that for velocity control of the same mechanism, and also to task performance by subjects using their physiological upper-limb.

The remainder of this paper is devoted to a

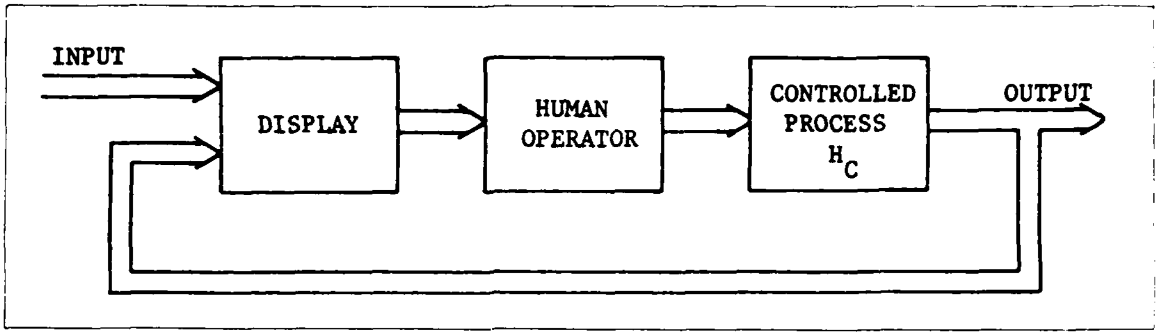

FIGURE 1
Schematic representation of pursuit tracking system of the type used in this study.

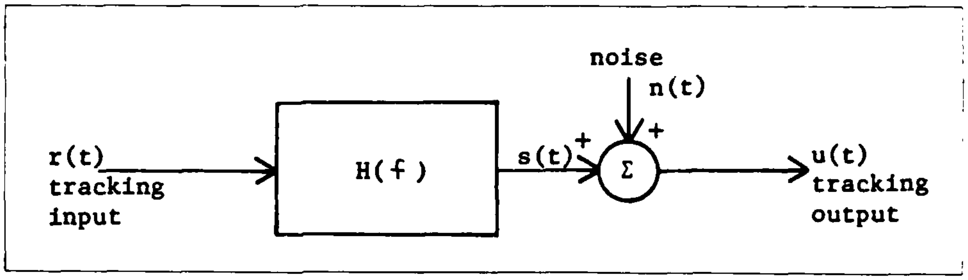

FIGURE 2
Quasi-linear representation of tracking system.

discussion of the methods and results of the studies performed in analyzing the ability of subjects to control their physiological arm and shoulder. The design and evaluation of the experimental prosthesis are detailed in a companion paper by Doubler and Childress (13), also presented here.

ANALYSIS METHODS APPLIED IN THIS STUDY

To predict and analyze accurately the potential effectiveness of a prosthesis-control technique, parameters must be specified for evaluating performance. The goal in prosthesis design is to provide a system that achieves the maximum restoration of function while minimizing the conscious attention to control required. Yet concentration on the control task being attempted is an inherent aspect of almost all laboratory analyses of prosthesis function. It seems reasonable to assume, however, that the ability to control a prosthesis while directly attending to it does provide some indication of the potential for subconscious control. Thus it should be possible, through careful consideration of the control philosophy employed, to perform a laboratory analysis that provides a confident indication of real-world potentials.

In this investigation, extensive experiments were performed analyzing the ability of subjects to control their upper-limb and prosthetic replacements, based on the performance of pursuit tracking tasks with continuous random input signals. A pursuit tracking system, represented schematically in Figure 1, was utilized because it was felt to be the type of manual control system that best represents the characteristics of upper-limb control and function while also providing a tractable and easily understood representation of performance. For some time it has been known that when the input appears random, the input-output relationship for a pursuit manual control system can be represented by a linear element—whose characteristics remain constant as long as the input characteristics and task variables remain constant—in series with a source of random noise, as shown in Figure 2 (see e.g. Elkind and Forgie (14)). Because of the dependence of the linear parameters on task variables, this representation is designated a "quasi-linear" model. The advantage of this representation is that because task variables are maintained constant during analysis, linear control theory techniques can be used to analyze and describe system operation.

Several linear parameters, such as the system transfer function and input-output coherence function, were initially derived and studied in searching for a meaningful and straighforward representation of control performance. One linear parameter that seemed particularly relevant to this study was derived by noting that the system model given in Figure 2 is precisely the same as that for an information channel with additive noise. For continuous random tracking experiments, the subject's task is to produce a signal at the system output that matches the input as closely as possible. This task can be considered analogous to transmitting the input information across the channel with as little error as possible.

Shannon (15) showed that the channel capacity (maximum rate at which information can be transmitted) of a continuous channel of bandwidth W perturbed by white Gaussian noise of power N is given by

$$C = W \log_2 (1+S/N) \qquad [1]$$

where S is the average transmitter power and C is expressed in bits/sec. He further showed that, to achieve this capacity, the transmitted signals must have a Gaussian amplitude density and flat frequency spectrum over W. In the case where the signal-to-noise ratio (S/N) is not constant over W, this relationship can be generalized by considering small slices of the frequency spectrum over which a constant signal-to-noise ratio can be assumed. Taking this process to the limit, the maximum information transmission rate, $\dot{T}$, is given by

$$\dot{T} = \int_W \log_2 \left[1 + \frac{S(f)}{N(f)} \right] df \qquad [2]$$

This relationship can be experimentally calculated using the relationship

$$1 + \frac{S(f)}{N(f)} = \frac{\Phi_{uu}(f)}{\Phi_{uu}(f) - [H(f)]^2 \Phi_{rr}(f)} \qquad [3]$$

where Φ_{rr} and Φ_{uu} are the input signal and output signal power spectra, respectively. Note that H(f) for the system in Figure 2 is given by

$$H(f) = \frac{\Phi_{ru}(f)}{\Phi_{rr}(f)} \qquad [4]$$

where Φ_{ru} is the cross-power spectrum relating the system input and output.

As far as is known, information transmission analysis of this kind has not been used previously in studying and comparing upper-limb function and prosthesis control. The effectiveness of prosthesis control is in large part determined by how well the user can communicate his motor intent to his prosthesis; based on that premise, information transmission is a concept philosophically aligned with this analysis of prosthesis system performance.

ANALYSIS OF PHYSIOLOGICAL CONTROL OF THE UPPER EXTREMITY

As noted previously, the purpose of this analysis was to determine the effectiveness of physiological shoulder motion as prosthesis control input. To achieve this purpose, one- and two-dimensional random tracking experiments were performed using three different kinds of control: (i) tracking with physiological elbow and wrist motion, (ii) tracking with shoulder-effected position control, and (iii) tracking with shoulder-effected velocity control.

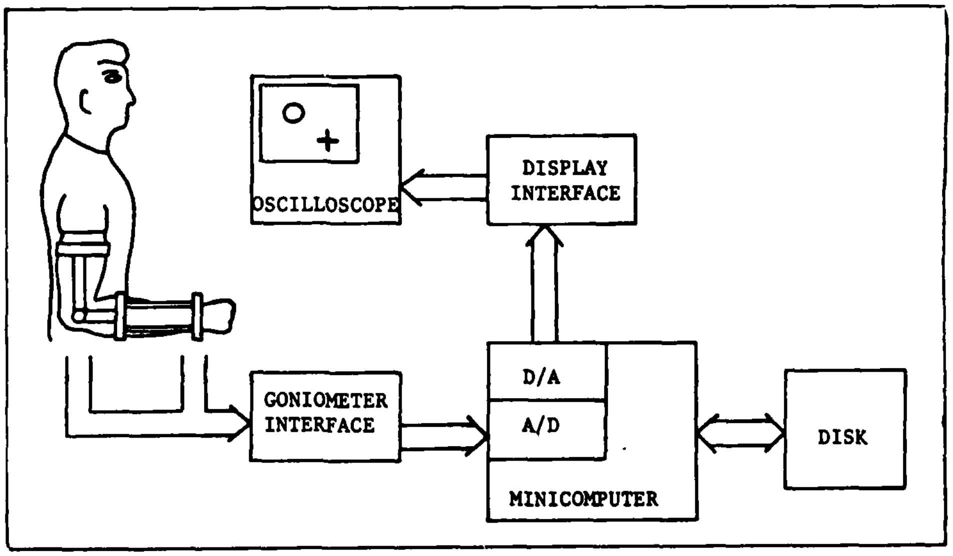

FIGURE 3
Block diagram of experiment control and data acquisition system.

Three healthy males in their mid-20's served as subjects in the experiments for tracking with the physiological elbow and wrist. Two healthy males in their mid-20s served as subjects in the experiments for tracking with shoulder-effected position and velocity control.

Experiment Control and Data Acquisition System

A minicomputer-based experiment control and data-acquisition system was utilized in the experiments performed in this study. (A block diagram of the system is shown in Figure 3.) In the experiments, the subjects interacted with an oscilloscope display on which a circle and crosshair were presented. The X and Y display coordinates of the crosshair were specified by the outputs of goniometers attached to the subject's upper-limb. The position of the circle indicator served as a target for desired joint position, its position in one or two dimensions being determined by computer-generated signals.

Goniometric Systems

Two different goniometric systems were used in these experiments. One system allowed simultaneous measurement of elbow flexion-extension and wrist pronation-supination in the right arm. The elbow goniometer in this system consisted of two single-axis hinges (one instrumented with a potentiometer) attached to cuffs around the humerus and forearm. The system's wrist goniometer was derived from a potentiometer-instrumented wrist rotation unit originally used in a powered orthosis. The lengths of the humeral and forearm sections of the goniometric system could be adjusted to fit different subjects.

The other goniometric system, used to measure shoulder movement and position, consisted of a potentiometer-instrumented linkage with two degrees of freedom, positioned over the sternoclavicular joint and connected by a rigid rod to another linkage positioned over the acromion process. Each subject wore a custom-fitted plastic body-jacket to which the sternoclavicular linkage was rigidly attached and held in place. The acromion linkage was attached to a small shoulder cap held in place against the skin by double-sided tape and a strap through the axilla. The linkages were positioned in such a way that, during shoulder movement, the connecting rod remained approximately parallel to the clavicle, and the two potentiometers in the sternum linkage provided measures of clavicular motion in the frontal plane (elevation-depression) and in the transverse plane (protraction-retraction), respectively.

Display Gain Relationships

With each goniometric system, an electronic interface was used that provided output signals linearly related to measured joint angle. During experiments, those signals determined the position of the tracking follower.

For tracking with the physiological elbow and wrist, the position of the crosshair indicator along the X-axis of the display was linearly related to the output of the goniometer measuring wrist position. Follower position along the display Y-axis was linearly related to the output of the potentiometer measuring elbow position. The gains of the goniometer and display interfaces were set such that angular displacements of 40 degrees of the elbow and wrist yielded follower displacement of 1 inch (2.54 cm) along the corresponding axis.

For tracking with shoulder-effected control, the position of the crosshair follower along the display Y-axis was determined by the output of the goniometer measuring shoulder elevation-depression and follower position along the X-axis was determined by the output of the goniometer measuring shoulder protraction-retraction. Follower position along the X and Y axes was linearly related to the outputs of the respective goniometers.

Initially, experiments were performed in which it was assumed that the full range of desired prosthesis motion (180 degrees of wrist rotation and 130 degrees of elbow flexion) was mapped into the full range of shoulder motion. Based on that concept of prosthesis control, the gains of the goniometer and display interfaces were set such that, for each subject, shoulder movement through the full range of elevation-depression (30–40 degrees) yielded displacement of the displayed follower equivalent to that yielded by 130 degrees of elbow flexion-extension movement in the tracking experiments performed with the physiological elbow. Similarly, shoulder movement through the full range of protraction-retraction (approximately 40 degrees) yielded crosshair displacement equivalent to that yielded by 180 degrees of wrist rotation.

Random tracking experiments were also performed in which the full range of theoretical prosthesis movement was mapped into ½ of the full range of shoulder movement.

For shoulder-effected velocity control, the velocity with which the tracking follower moved along the display X and Y axes was linearly related to the outputs of the respective goniometers. The shoulder-position/follower-velocity gain relationship was important in these tracking experiments. If the gain was too low, the follower could not be made to move fast enough for accurate tracking of the target. If the gain was too high, stable control of follower position was difficult and the output tended to oscillate.

For these experiments, the gain relationships used were determined empirically by allowing each subject to choose the relationship that felt the most responsive, yet stable. The actual gain relationships (in terms of follower-movement velocity on the display screen per degree of goniometer displacement) chosen by the two subjects who performed these experiments were 0.67 and 0.85 in/sec/deg (1.70 and 2.16 cm/sec/deg), respectively. Based on the maximum excursion ranges measured, the absolute maximum movement-velocities achievable were approximately 14 in/sec (35.6 cm/sec). If it is hypothesized that the shoulder movements are being used to control highly responsive prosthesis joints whose positions in turn specify the position of the tracking follower, this corresponds to a theoretical maximum joint velocity of about 10 rad/sec.

Tracking Input Signals

During experiments, the position of the displayed circle target was controlled by "random" input signals stored in computer memory. These lowpass signals were generated by amplifying, sampling, and digitally filtering Zener diode shot and thermal noise at 8 different cutoff frequencies (0.16, 0.24, 0.40, 0.64, 0.96, 1.36, 1.84, 2.40 Hz). The signals had Gaussian amplitude distributions and flat power spectra below the cutoff frequency, rolling off at -200 dB/dec above the cut-off frequency. A total of 40 random input signals were generated, 5 for each cutoff frequency. Owing to the nature of their generation, all of these signals were uncorrelated.

The filtered input signals were scaled so that each had an rms amplitude of 1.46 V regardless of cutoff frequency. The X and Y axis display interface gains were set at 4 V/in (1.57 V/cm). As noted previously, for tracking with the physiological elbow and wrist, joint displacement of 40 degrees yielded follower displacement of 1 inch (2.54 cm).

Procedure for Random Tracking Experiments

In these experiments, for each control condition the subjects were required to perform three different random tracking tasks: (i) one-dimensional tracking of target motion along the display X-axis, (ii) one-dimensional tracking of target motion along the Y-axis, and (iii) two-dimensional tracking of target motion in the X-Y plane.

For the experiments, the subjects were seated 2 feet (0.61 m) from the display. A single tracking run lasted 2 minutes. For each control condition, the subjects performed 5 runs of each tracking task for each of the eight different frequency classes of input signals. To prevent the subjects from becoming familiar with the characteristics of the input signal, different signals were used for each of the 5 runs. However, to eliminate the possibility of performance differences attributable to statistical variations, the same input signals were used for each of the three different tasks and for the different control conditions.

In the 5 runs for each two-dimensional task, the same 5 uncorrelated input signals were used to control the X coordinate of the displayed target as were used to control the Y coordinate. However, the signals were used in different order. Thus over the 5 runs, the characteristics of target motion in both the X and Y directions were precisely the same, but the relative motions along the two axes were uncorrelated.

All the runs for one class of inputs, i.e. 5 for each task, 15 total, were performed in a single sitting. Sufficient time was provided between runs to avoid subject fatigue. The one-dimensional tasks were always performed before the two-dimensional task, alternating the order of one-dimensional X-axis and Y-axis tracking in subsequent sittings.

Subjects were instructed to follow target position as closely as possible, keeping the follower centered in the target if they could. They were given no learning period. However, the tracking tasks were performed first for the lowest-frequency input signals, with the higher-frequency inputs being presented in order of increasing cutoff frequency. This meant that by the time the higher-frequency inputs were in use and tracking had become difficult, the subjects had acquired considerable experience with the procedure.

The data for each set of 5 tracking runs performed for each tracking task and input-frequency class were stored in computer memory and combined in a single 10,240-point file representing approximately 8.5 minutes of tracking data sampled at 50 msec intervals. For two-dimensional tasks, two files were generated, one for the X-axis tracking component of the response, the other for the Y-axis component.

The tracking data files were first analyzed with the appropriate input signal files to obtain input power, output power, and cross-power spectra.

The power and cross-power spectra were derived by separating the data files into ten 1024-point segments, computing the spectrum for each segment using Fast Fourier Transform (FFT) techniques, and averaging the results. This method, called averaging periodograms, is equivalent to that proposed by Welch (16).

The resulting spectra were used to derive the quasi-linear system transfer function via a straightforward discrete frequency representation of Equation [4]

$$H(f_k) = \frac{\Phi_{ru}(f_k)}{\Phi_{rr}(f_k)} \qquad [5]$$

The maximum information transmission rate was then derived using Equations [2] and [3] and summing the frequency components within the passband of the input signal. The precise relationship used was

$$\dot{T} = \frac{1}{NT} \sum_{k=\phi}^{K} \log_2 \left[\frac{\Phi_{uu}(f_k)}{\Phi_{uu}(f_k) - [H(f_k)]^2 \Phi_{rr}(f_k)} \right] \qquad [6]$$

where N=the number of data samples in a segment, T=the sample interval, $f_k = k/(NT)$ and $K/(NT) \leq f_c$, the input signal cutoff frequency. As noted previously, for this study N=1024 and T=50 msec.

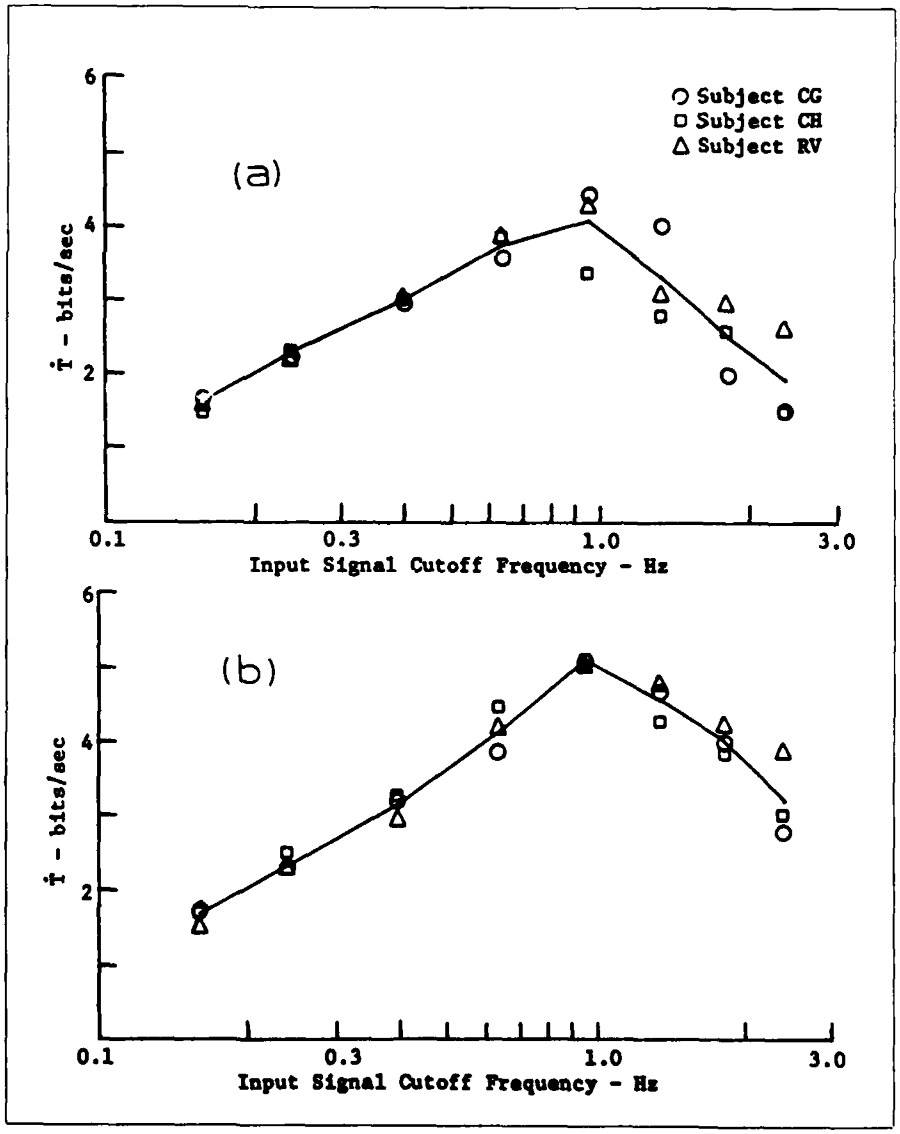

FIGURE 4
Information transmission rates as a function of input signal cutoff frequency for one-dimensional tracking with the physiological elbow (a) and wrist (b).

Experimental Results

A detailed presentation of the data obtained from these experiments is beyond the scope of this paper (see Doubler (17) for a more in-depth discussion). The following discussion centers on the results most relevant to the specific topics addressed in this paper.

Examples of the maximum information transmission rates obtained for one-dimensional tracking with the physiological elbow and wrist are shown in Figure 4. The results are similar to those reported by Elkind and Sprague (18) for pursuit tracking with a hand-operated joystick. For the lower-frequency input signals, the subjects were able to track the target accurately. Thus the response signal-to-noise ratio remained generally constant, and there was an approximately linear increase in the information transmission rate with increasing input-signal cutoff frequency.

The information transmission rates achieved generally peaked for input signals with cutoff frequencies near 1 Hz. As the input-signal cutoff frequency increased above 1 Hz, tracking became increasingly more difficult and the signal-to-noise ratio of the responses decreased rapidly, causing the observed decrease in information transmission rate. The inability of human subjects to accurately track random input signals that have significant energy above 1 Hz is a recurring finding in the literature on manual control.

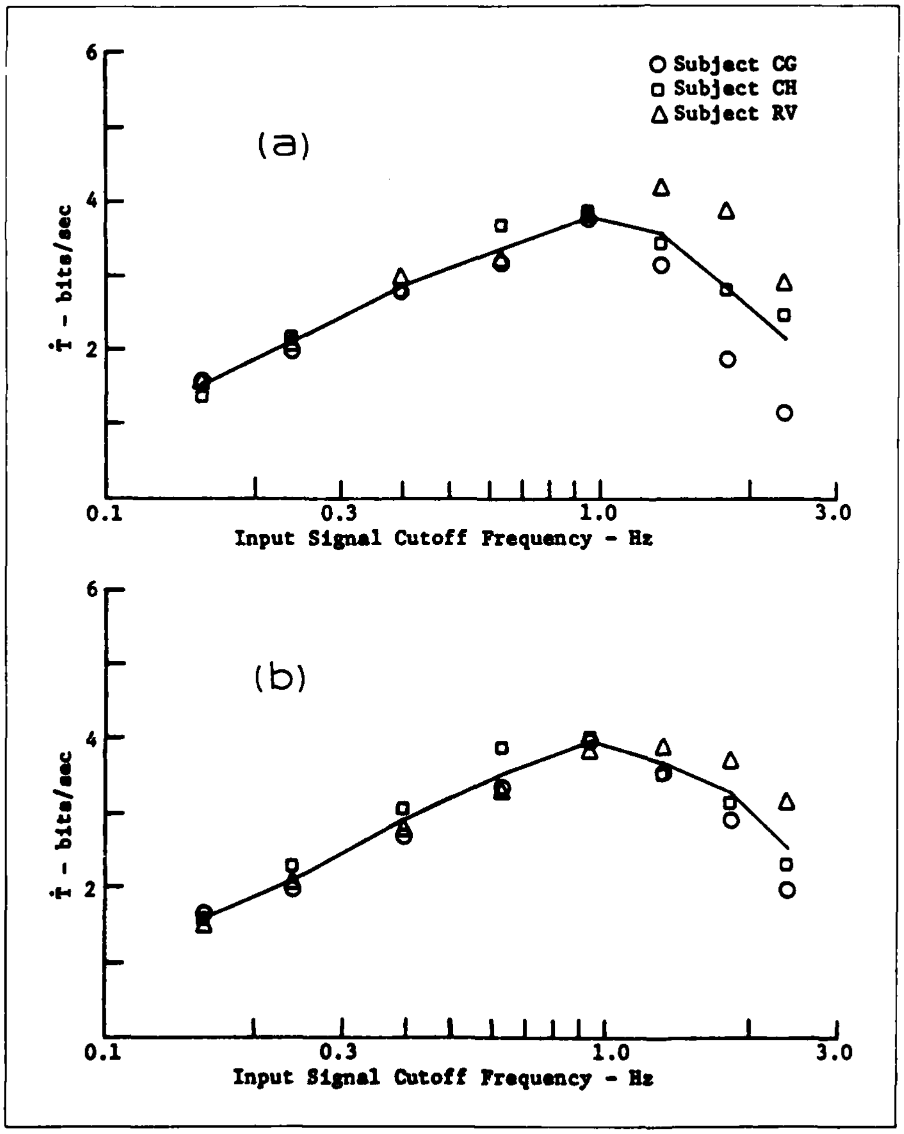

FIGURE 5
Information transmission rates for tracking with the physiological elbow (a) and wrist (b) in two-dimensional tasks. These data were derived by separating the two-dimensional response into the components corresponding to elbow and wrist tracking.

As can be seen in Figure 4, the data indicate that the subjects were able to track somewhat more effectively with wrist movement than with elbow movement. It seems likely that this difference in tracking capabilities is primarily due to the increased inertial loading associated with elbow movement. It is probable that improved high-frequency tracking performance for the elbow could be realized with smaller-amplitude input signals.

Two-dimensional tracking performance was analyzed by separating the two-dimensional responses into the components derived from the individual control inputs. As discussed earlier, the two signals controlling target motion along the X and Y axes in two-dimensional tasks were uncorrelated. Therefore the portion of each output signal that was linearly related to each of the inputs could be precisely specified.

Examples of the results obtained for two-dimensional tracking with the physiological elbow and wrist are shown in Figure 5. Comparing Figures 4 and 5, it is not surprising to see that wrist tracking was apparently significantly better when performed independently than when performed simultaneously with elbow tracking. Note, however, that while for low-frequency inputs subjects did attain slightly higher information transmission rates for independent elbow tracking than for simultaneous elbow tracking, the situation was reversed for the higher-frequency inputs. These results reinforce the theory that the difference between elbow and wrist tracking performance can be linked to the increased inertial loading associated with elbow movement. The increased mental effort required for two-dimensional control evidently had little effect on elbow tracking performance, indicating

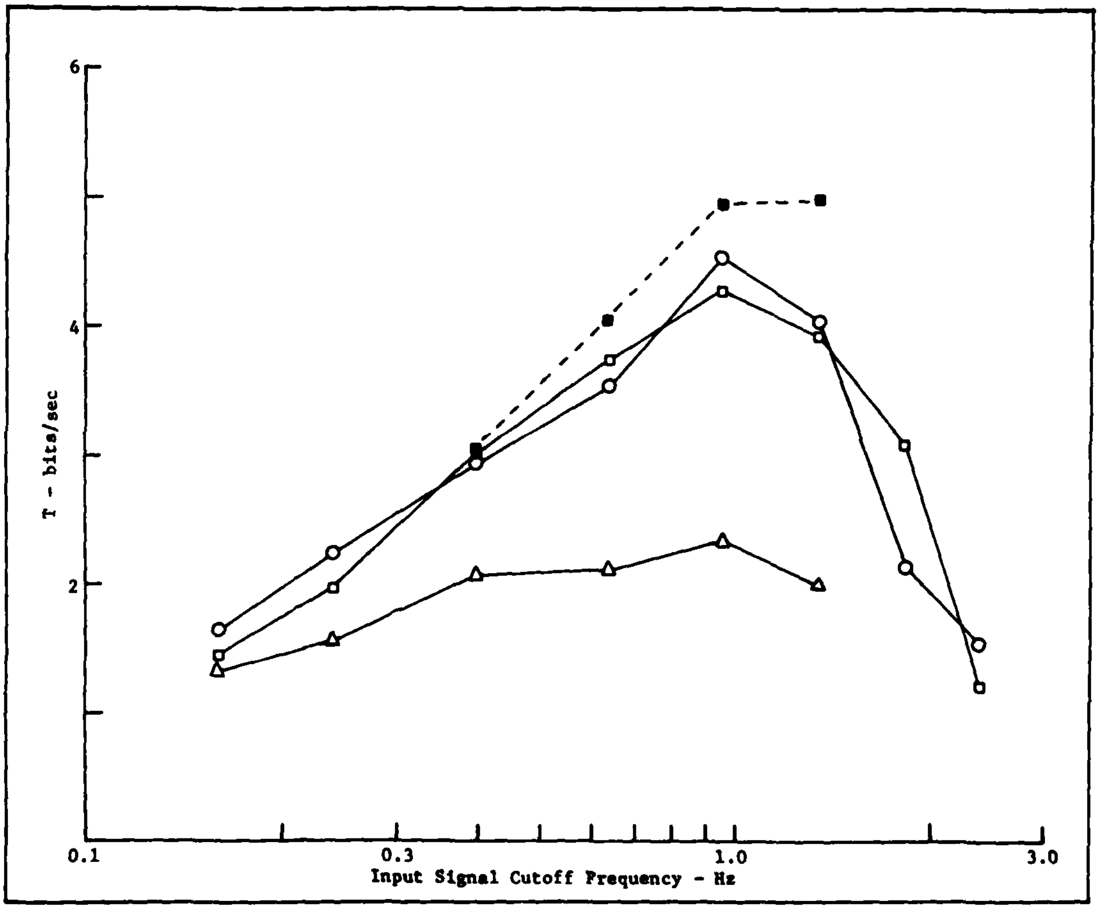

FIGURE 6

Comparison of the information transmission rates for one-dimensional tracking tasks performed by the same subject with the physiological elbow and with shoulder-effected position and velocity control using shoulder elevation-depression.

○ Physiological elbow

■ Shoulder-effected position control (increased gain)

□ Shoulder-effected position control (initial gain)

△ Shoulder-effected velocity control

some other limiting factor. The differences observed are small and it seems reasonable to assume that they may have arisen through the adopting of different tracking tactics by the subjects.

Qualitatively, the results obtained for shoulder-effected position-controlled and velocity-controlled tracking were similar to those for tracking with the physiological elbow and wrist. As before, the peak information transmission rates were achieved for input signals having a cutoff frequency of approximately 1 Hz. The data indicate that subjects were able to track somewhat better with shoulder elevation-depression than with protraction-retraction, although the difference was not particularly large. Note that shoulder motion of the type required in these experiments is somewhat unnatural, since persons are seldom required to perform isolated shoulder movements of the kind required in these experiments in normal situations.

Again, as for the physiological elbow and wrist, comparison of the results for one-dimensional tracking with those for two-dimensional tracking indicated that for shoulder-effected position and velocity control, performance for each control input was generally better when performed independently than when performed as part of a two-dimensional task.

The fundamental objectives of this investigation were to (i) determine the potential effectiveness of using shoulder motion as the control input for an EPP controlled prosthesis, and (ii) compare the relative effectiveness of shoulder-effected position and velocity control. In Figures 6 and 7 the information transmission rates for one-dimensional tracking with the different control conditions are plotted as a function of input signal cutoff fre-

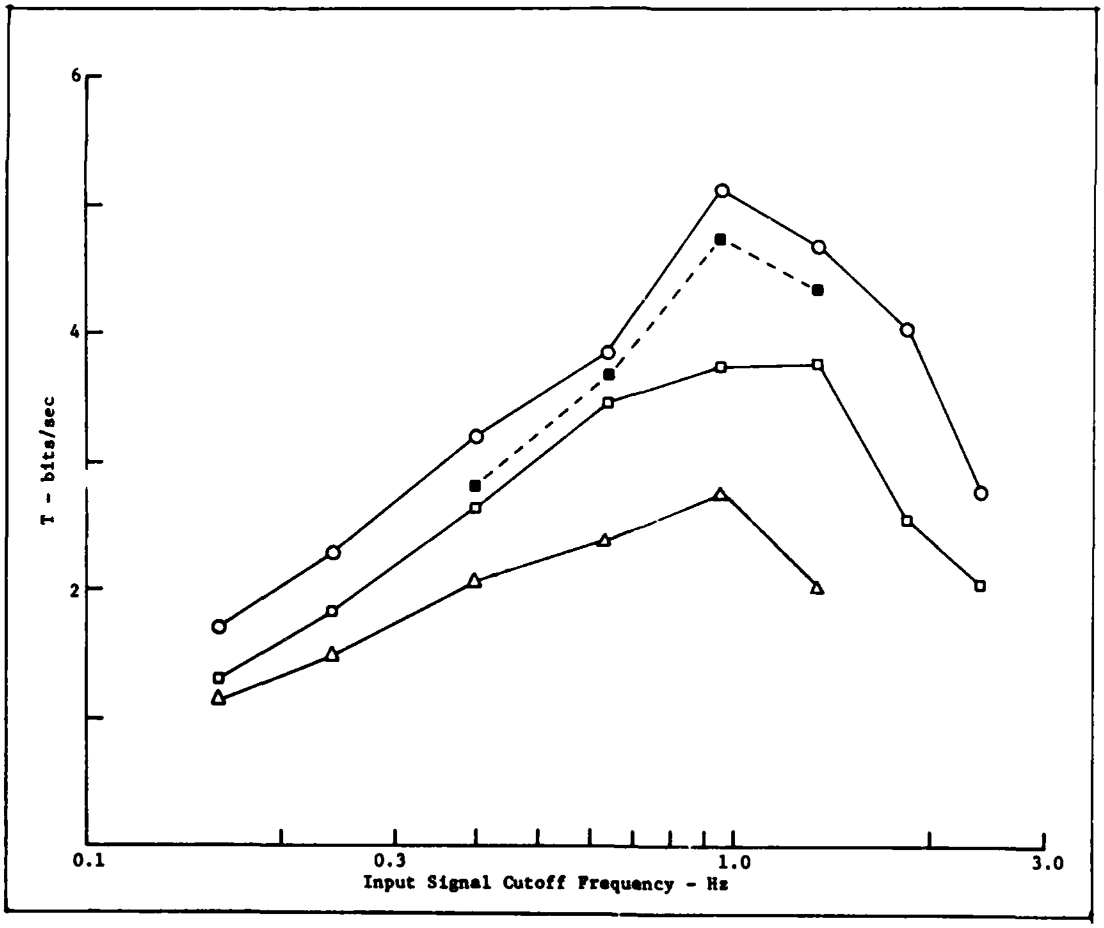

FIGURE 7

Comparison of the information transmission rates for one-dimensional tracking tasks performed by the same subject with the physiological wrist and with shoulder-effected position and velocity control using shoulder protraction-retraction.

○ Physiological wrist
■ Shoulder-effected position control (increased gain)
□ Shoulder-effected position control (initial gain)
△ Shoulder-effected velocity control

quency. All the data in these figures were obtained from the same subject. To allow direct comparison, the data for control using shoulder elevation-depression are plotted with data for tracking with the physiological elbow, the prosthesis function proposed to be controlled. Similarly, the data for tracking controlled with shoulder protraction-retraction are plotted with data for tracking with the physiological wrist. In Figure 8, the total information transmission rates for the two-dimensional tracking tasks, obtained by summing the rates for the individual channels, have been plotted.

These results clearly show that, when the shoulder is used as the control input, position control is significantly superior to velocity control in terms of information transmission capabilities in tracking tasks. For one-dimensional tasks, depending on the position control mapping relationship, the maximum information transmission rates achieved with position control were from 1.0 to 2.6 bits/sec higher than those measured for precisely the same tasks performed using velocity control. This difference corresponds to a 36 percent to 107 percent increase in the information transmission rates between velocity and position control. For the two-dimensional tasks, the maximum total information transmitted over both channels was from 1.8 to 3.8 bits/sec higher with position control than with velocity control, representing a 41 percent to 86 percent increase.

The data in Figures 6–8 also indicate that, with the proper selection of control mapping relationships, shoulder-effected position control of a highly responsive prosthesis mechanism could yield tracking performance comparable to that realized with physiological control of the natural elbow and wrist. As can be seen, tracking performance for shoulder-effected position control was considerably better for the increased-gain control mapping relationship in which 1/2 of the full range of shoulder motion was mapped into the full range of tracking follower excursion—as compared to that for the initial control mapping relationship in which the full range of shoulder motion was mapped into the full range of follower excursion. The poorer performance with the initial mapping relationship was probably due to dynamic control limitations associated with producing large-excursion shoulder movements.

All the data presented in Figures 6–8 were obtained from a single subject. Comparable data were obtained for shoulder-effected position- and velocity-controlled tracking by the other subject who performed those experiments.

Discussion and Conclusions

In respect to the fundamental objectives of this investigation cited in the previous section, it appears that (i) an EPP controlled prosthesis in which wrist rotation and elbow flexion are controlled by shoulder protraction-retraction and elevation-depression could exhibit functional characteristics comparable to those of the physiological elbow and wrist, as defined by tracking capabilities, and (ii) shoulder-effected position control of prosthesis function has considerably more potential for providing effective control than similarly effected velocity control. Both of these statements are made assuming a prosthesis mechanism with non-limiting dynamic characteristics.

These results indicate the importance of the position control mapping relationship to hypothetical prosthesis performance. It appeared that improved dynamic control of a prosthesis could be obtained by using less than the full range of shoulder motion. It may also be desirable to use less than the full range of shoulder motion in a prosthesis for comfort and cosmetic reasons. Inherent in the concept of EPP control, however, is the idea of being able to sense output position from the proprioceptive sensations associated with the physiological control input. Intuitively, it seems that to relate output position to input position as accurately as possible, it would be desirable to map output position into as much of the full range of input control motion as possible. This performance tradeoff would have to be considered in an actual design.

The difficulty of effectively controlling multifunctional prostheses with velocity control is a significant problem in prosthesis design. One of the reasons for performing the two-dimensional tasks in this investigation was to examine and compare multifunctional velocity control with multifunctional position control. It was initially hypothesized that the relative effectiveness of position control would be even more obvious for two-dimensional control than for one-dimensional control. This expectation was derived from the concept that position control is more natural and able to be effected at a more subconscious level of attention than velocity control. It seemed likely that this effect would manifest itself in terms of the relative degradation in tracking performance observed for the individual functions when comparing solo performance in one-dimensional tasks with simultaneous performance in the two-dimensional tasks.

It was somewhat surprising, therefore, to see that the data for these experiments indicate that the relative degradation in performance between tasks performed individually and simultaneously

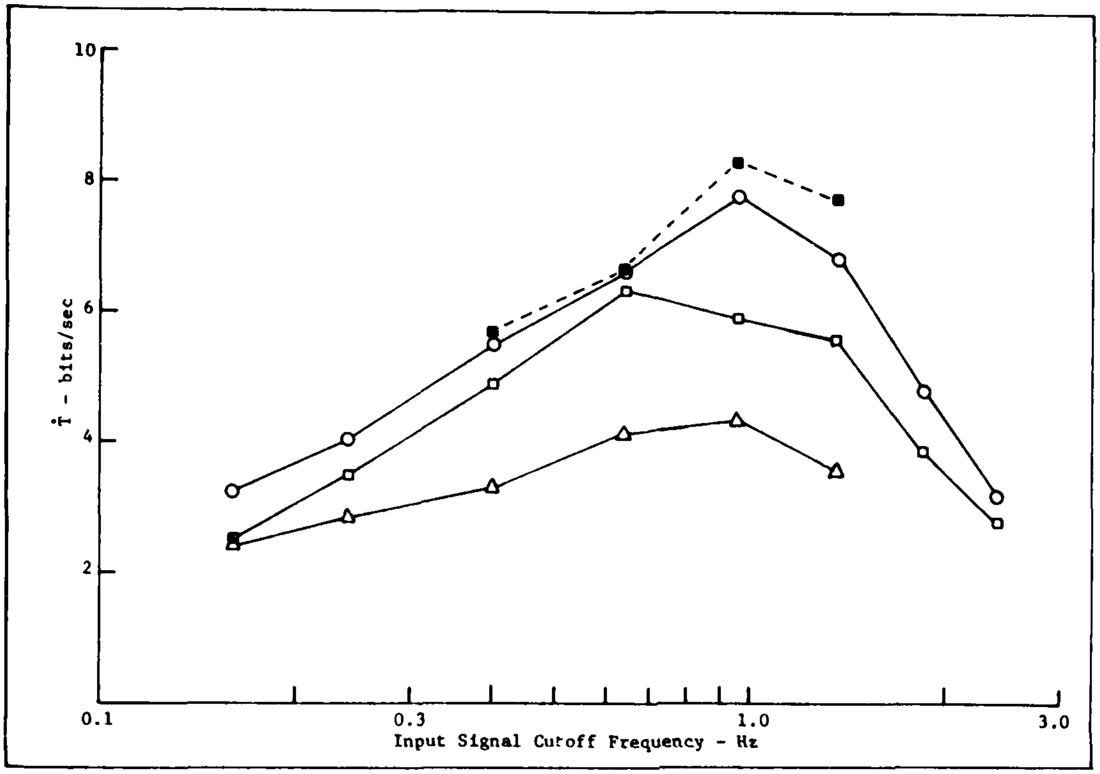

FIGURE 8
Comparison of the total information transmission rates for two-dimensional tasks performed by the same subject with the physiological elbow and wrist and shoulder-effected position and velocity control. These data were derived by summing the rates for the individual channels in the two-dimensional tasks.
○ Physiological elbow and wrist
☐ Shoulder-effected position control (initial gain)
■ Shoulder-effected position control (increased gain)
△ Shoulder-effected velocity control

was no greater for velocity control than for position control. In these experiments, however, the subjects were expected to concentrate solely on the experimental tasks. Thus there was no attempt or means to determine the level of possible subconscious involvement. Other than the fact that velocity control is inherently more difficult, these results do not indicate any fundamental differences between the psychological mechanisms associated with effecting velocity control and position control while directly attending to task performance, although it is still hypothesized that differences do exist.

SUMMARY

This research was devoted to an investigation of the effectiveness of applying the concept of extended physiological proprioception to the control of upper-extremity prostheses. It was originally hypothesized that EPP control derived from residual shoulder motion could be advantageously applied in multifunctional prostheses for shoulder disarticulation amputees.

This paper described a study of the ability of subjects to control physiological shoulder elevation-depression and protraction-retraction as prosthesis control inputs. For the study, extensive experiments were conducted analyzing the ability of subjects to perform one-dimensional and two-dimensional pursuit tracking tasks for continuous random input signals. The tracking experiments were performed using shoulder-effected position and velocity control of function. For comparison purposes, equivalent experiments were also performed for tracking with physiological elbow flexion-extension and wrist rotation, the physiological functions to be controlled in the proposed prosthesis. Tracking performance was specified in terms of response information transmission capacity, based on the premise that the effectiveness of prosthesis control is in large part determined by the ability of the user to communicate his motor intent to the prosthesis.

The results of this study showed that, for a hypothetical prosthesis mechanism with non-limiting dynamic response characteristics, an EPP-controlled prosthesis in which wrist rotation and elbow flexion are controlled by shoulder elevation-depression and protraction-retraction could exhibit functional characteristics comparable to those of the physiological elbow and wrist, as defined by tracking capabilities. The results of this study also indicated that shoulder-effected position control of prosthesis function has considerably more potential for providing effective control than similarly *effected velocity control.*

Motivated by the findings of the study just described, an experimental prosthesis was built for further evaluation of the concept and principles of EPP control. The design and evaluation of the experimental prosthesis are detailed in a companion paper (13) ■[b]

---

[b] The companion paper follows on page 19.

REFERENCES

1. Childress DS: Neural organization and myoelectric control. **In:** Neural Organization and Its Relevance to Prosthetics. (W.S. Fields, ed) Intercont. New York, Med. Book Corp. pp. 117–130, 1973.
2. Mann RW: Force and position proprioception for prostheses. **In:** The Control of Upper-Extremity Prostheses and Orthoses. (P. Herbert et al, eds) Springfield, Illinois, C. C Thomas. pp. 201–219, 1974.
3. Simpson DC: The choice of control system for the multimovement prothesis: extended physiological proprioception (EPP). **In:** The Control of *Upper-Extremity Prostheses and* Orthoses. (P. Herberts et al, ed) Springfiled, Illinois, C.C Thomas. pp. 146–150, 1974.
4. Jerard RB and Jacobsen SC: Laboratory evaluation of a unified theory *for simultaneous multiple axis artificial* arm control. J Biomech Eng 102:199–207, 1980.
5. Simpson DC: The control and supply of a multimovement externally powered upper limb prosthesis. Proc 4th Int Symp External Control of Human Extremities. Belgrade, Yugoslav Committee for Electronics and Automation, pp. 247–254, 1973.
6. Bernstein N: The Co-ordination and Regulation of Movements. New York, Pergamon Press, 1967.
7. Simpson DC: An experimental design for a powered arm prosthesis. Scottish Home and Health Dept., Health Bull 23(4):75–78, 1965.
8. Simpson DC: An externally powered prosthesis for the complete arm. Biomed Eng 4:106–110, 119, 1969.
9. Simpson DC and Kenworthy G: The design of a complete arm prosthesis. Biomed Eng 8(2):56–59, 1973.
10. Carlson LE: Closed-loop position control of a pneumatic prosthesis. Proc 25th ACEMB, Bal Harbour, Florida, p. 97, 1972.
11. Carlson LE: Position control for above-elbow prostheses. Final Report VA Contract V101(134)P-561, 1980.
12. Carlson LE and Primmer KR: Extended physiological proprioception for electric prostheses. Preprint of paper presented at 6th Int Symp on External Control of Human Extremities. Dubrovnik, Yugoslavia, 1978.
13. Doubler JA and Childress DS: Design and evaluation of a prosthesis control system based on the con*cept of extended physiological pro*prioception. Journal of Rehabilitation R&D, 21(1), 1984.
14. Elkind JL and Forgie CD: Characteristics of the human operator in simple manual control systems. IRE Trans Automatic Control AC-4, pp.44–55, 1959.
15. Shannon CE: A mathematical theory of communication. Bell Syst Tech J 27(3):379–423, 623–656, 1948.
16. Welch PD: The use of fast Fourier transform for the estimation of power spectra: A method based on time averaging over short, modified periodgrams. IEEE Trans Audio and Electroacoustics. AU-15, pp. 70–73, 1967.
17. Doubler JA: An analysis of extended physiological proprioception as a control technique for upper-extremity prostheses. Ph.D. dissertation, Northwestern Univ, Evanston, Illinois, 1982.
18. Elkind JL and Sprague LT: Transmission of information in simple manual control systems. IRE Trans Human Factors in Electronics. HFE-2 pp. 58-60, 1961.

Journal of Rehabilitation Research
and Development, Vol. 21, No. 1
BPR 10-39 pages 19—31

Design and Evaluation of a Prosthesis Control System Based on the Concept of Extended Physiological Proprioception

JAMES A. DOUBLER, Ph. D.[a]
DUDLEY S. CHILDRESS, Ph. D.
Prosthetics Research Laboratory
Northwestern University
345 East Superior Street
Chicago, Illinois 60611

Abstract—This paper describes the design and evaluation of an experimental prosthesis-control system based on the concept of extended physiological proprioception (EPP). It was originally hypothesized that EPP control effected by residual shoulder motion could be effectively applied in multifunctional prostheses for shoulder disarticulation amputees.

The experimental system developed for this study utilized a force-driven control scheme and a shoulder motion transduction system in which direct cable linkages to the prosthesis components were used to implement EPP position-servo relationships between shoulder elevation-depression and prosthesis elbow flexion, and between shoulder protraction-retraction and prosthesis wrist rotation. The results of experiments performed with this prosthesis (and with an experimental velocity-controlled prosthesis implemented for comparison purposes) clearly demonstrated the superior performance provided by EPP control of prosthesis function.

INTRODUCTION

This paper describes the design and evaluation of a prosthesis-control system based on the concept of extended physiological proprioception (EPP). Originally formalized and proposed as a prothesis-control technique by D. C. Simpson (1, 2), the concept of extended physiological proprioception implies that the manner in which a mechanical device is controlled or used can be such that the operator is able to accurately perceive its static and dynamic characteristics through naturally arising proprioceptive sensations. By eliciting proprioceptive sensations, the device becomes an artificial extension of the operator, part of the functioning person.

Simpson proposed that EPP could be realized in the control of externally powered prostheses by coupling prosthesis function to residual wrist motion in a position-servo relationship where the input cannot "beat" the output. With such a system, the position and movement of a prosthesis joint are directly related at all times to the position and movement of an anatomical joint —the anatomical joint being constrained to maintain a constant relationship between it and the prosthesis. The system is a position servomechanism in which the input is physically constrained by the output so that the input cannot get ahead of or fall behind the output, even temporarily. By intimately linking physiological joint position to prosthesis joint position, the pro-

---

[a] Now with AT&T Bell Laboratories Naperville, Illinois.

prioceptive feedback mechanisms related to the control of the physiological joint may be directly associated with the operation of the prosthesis joint.

For this study, it was originally hypothesized that EPP control derived from residual shoulder motion could be effectively applied in multifunctional prostheses for shoulder disarticulation amputees. A companion paper to this one (Doubler and Childress (3)) describes a study analyzing the ability of subjects to control physiological shoulder elevation-depression and protraction-retraction as prosthesis control inputs. The results of that study showed that functional control comparable to that of the physiological elbow and wrist, as defined by tracking capabilities, could be realized with a hypothetical EPP-controlled prosthesis with non-limiting dynamic response characteristics in which wrist rotation and elbow flexion are controlled by shoulder protraction-retraction and evaluation-depression, respectively. The results of the investigation also indicated that EPP control of prosthesis function has considerably more potential for providing effective control than does velocity control.

On the basis of these findings, an experimental prosthesis was built for further investigation of the concept and principles of EPP control. The experimental prosthesis utilized a shoulder motion transduction mechanism in which direct cable linkages to the prosthesis components were used to implement EPP position-servo relationships between shoulder elevation-depression and prosthesis elbow flexion, and between shoulder protraction-retraction and prosthesis wrist rotation. The experimental prosthesis was evaluated by non-amputee subjects performing random tracking experiments equivalent to those performed in the studies described by Doubler and Childress (3). Blind positioning experiments were also performed. In evaluating the prosthesis, task performance using EPP control was compared to that for velocity control of the same mechanism, and also to task performance by subjects using their physiological upper-extremity.

PRELIMINARY SYSTEM DESIGN CONSIDERATIONS

The manner in which the position-servo relationships is implemented is the key to the effectiveness of EPP control. There are different approaches to implementing such a control relationship and it is important to consider the performance tradeoffs that can be expected with the different approaches.

A system diagram of one possible implementation of an EPP position-servo prosthesis controller is presented in Figure 1. In the system shown, m(t) corresponds to the central nervous system representation of the prosthesis user's motor intent. This signal is assumed to control the position and movement of an anatomical joint which specifies the prosthesis control input. The difference between the joint position, denoted by x(t), and the scaled output position of the prosthesis actuator being controlled, denoted by y(t), provides an error signal, e(t), from which the drive signal to the actuator is derived.

The only difference between the system presented in Figure 1 and a typical position-servo controller is the addition of the feedback link (A) to the anatomical joint. This feedback link mechanically constrains the anatomical joint in such a manner that x(t) is restricted to values within a small range around y(t). Noting that x(t) is determined by user's motor intent, this relationship can be expressed as

$$x(t) = \begin{cases} y(t) - \varepsilon ; F_x[m(t)] < y(t) - \varepsilon \\ F_x[m(t)] ; y(t) - \varepsilon \leq F_x[m(t)] \leq y(t) + \varepsilon \\ y(t) + \varepsilon ; F_x[m(t)] > y(t) + \varepsilon \end{cases} \quad [1]$$

where $\epsilon > 0$ and $F_x[m(t)]$ is the functional relationship between x(t) and m(t). This relationship is shown in Figure 2.

Without the feedback link (A), the anatomical joint would be free and x(t) could take on any output compatible with the user's motor intent and the characteristics of the physiological control system associated with that specific joint. This relationship could be represented by the dashed lines in Figure 2. Without feedback link (A), the difference between the actual prosthesis position and the position of the physiological joint controlling it would differ over a range determined by the relative responsiveness of the physiological and mechanical systems, and environmental influences such as prosthesis loading. Without link (A) the system would be a typical position-control system. The fundamental result of that condition would be that the prosthesis user would have to either directly attend to prosthesis function (or rely on incidental feedback) to be aware of the position and velocity of the prosthesis at all times. However, because of the constraint imposed by the feedback link, the user is able to directly relate all of the proprioceptive sensations associated with the control of the physiological joint (from which x(t) is derived) to the position and motion of the prosthesis function (from which y(t) is derived). Some difference may exist due to the linkage rela-

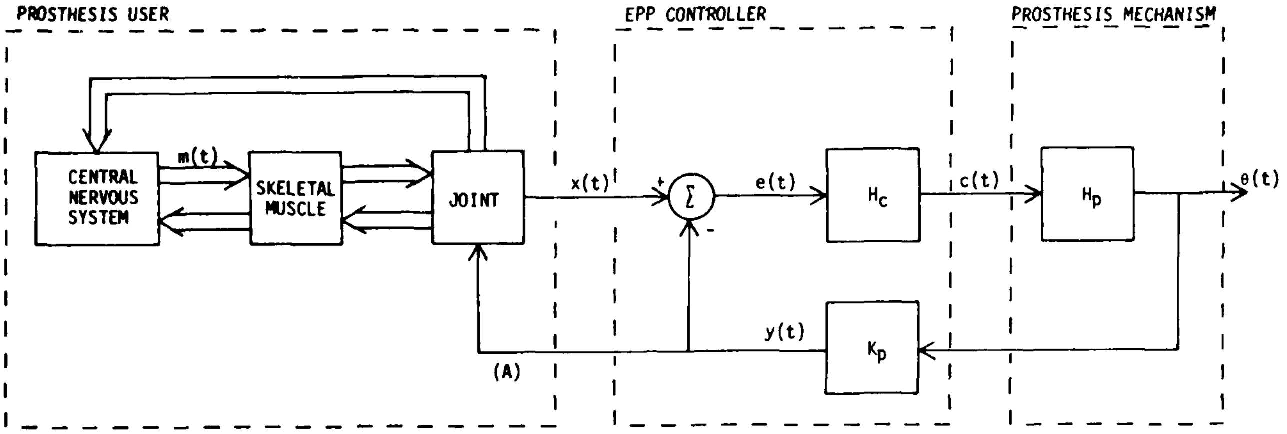

FIGURE 1
System model of an EPP position-servo prosthesis control system. With this system, the control signal driving the prosthesis mechanism, e(t), is derived from the difference between x(t), the position of an anatomical joint, and y(t), the scaled prosthesis output position. The feedback link (A) to the anatomical joint constrains x(t) to values within ±ε of y(t), as shown in Figure 2. In this model, m(t) represents the prosthesis user's motor intent.

FIGURE 2
Constraint imposed by the position feedback link (A) in Figure 1. The feedback link constrains anatomical joint position, x(t), to values within ±ε of y(t), the scaled prosthesis output position. When within ±ε of y(t), x(t) is a function of m(t), the prosthesis user's motor intent. The dashed lines indicate the relationship that would exist without the feedback link.

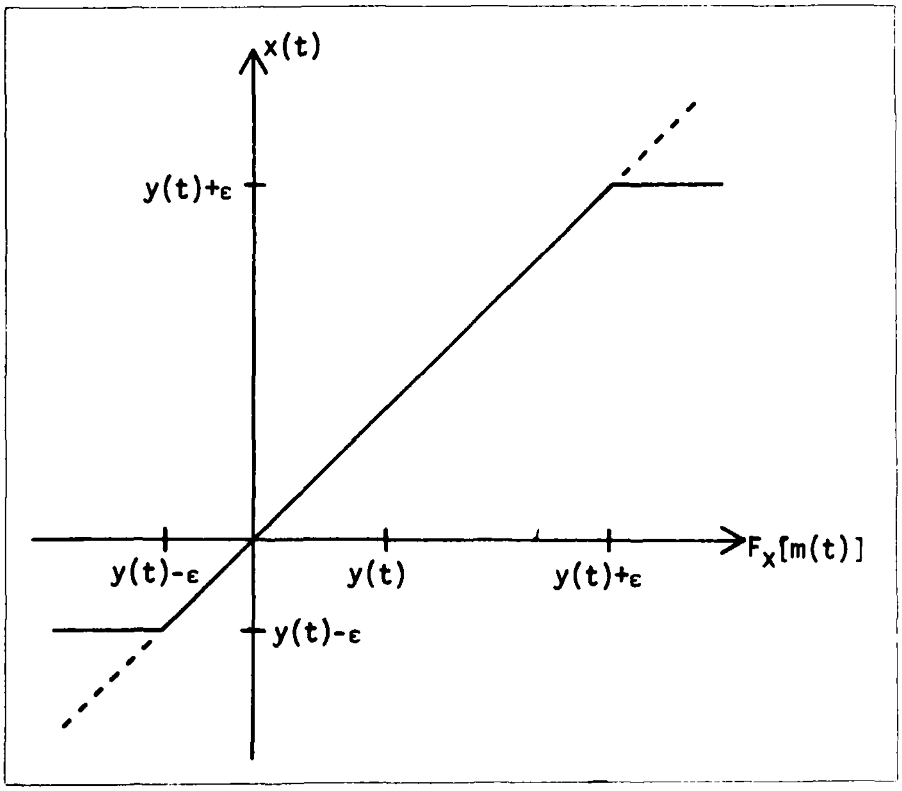

tionship defined by ϵ. Clearly it would be desirable to keep ϵ as small as possible to make the relationship between the controlling anatomical joint and the controlled prosthesis joint as intimate as possible.

Initially in this study it was planned to implement EPP control based on the system model presented in Figure 1. However, a fundamental problem with that approach was soon identified. Whereas the fundamental concept of EPP control calls for direct coupling of prosthesis joint position to physiological joint position, in the system in Figure 1 it is necessary to intentionally design the system in such a manner that a difference between the input and output positions can exist. In a system employing simple on-off control of the prosthesis actuator, that problem does not seem particularly significant. Such control could probably be effectively implemented using limit switches that are activated whenever the difference between the input and output approaches $\pm\epsilon$. The optimal design would be to make ϵ as small as possible to maintain the intimacy between input and output, yet large enough to provide an adequate dead zone to avoid limit cycle behavior.

Some of the electrically powered prosthesis components currently available are sufficiently responsive as to make the use of proportional control necessary. To achieve proportional control of the actuator in this system, m(t) must be such that x(t) lies in the linear response range of Figure 2, i.e.,

$$y(t) - \varepsilon \leq F_x[m(t)] \leq y(t) + \varepsilon \qquad [2]$$

While previously it was specified that ϵ should be made as small as possible to maintain intimacy between input and output, the proportionality of control realized with this system would probably be improved by increasing ϵ, which determines the range of input signals which provide proportional control. Note also that in the ϵ error range, the user's input would not be directly coupled to the output. Thus the user would be required to generate the proportional control signals without being able to feel how the prosthesis was responding.

The system diagram of an improved implementation of EPP position-servo control that eliminates the problem just discussed is shown in Figure 3. In this system, joint position x(t) is constrained by prosthesis actuator position y(t) as in the first system discussed. However, the input signal to the actuator controller H_c is not derived from the difference between x(t) and y(t), but rather is a signal derived from the force generated within the mechanical linkage between x(t) and y(t) when the anatomical joint specifying x(t) is restrained from achieving the desired output position specified by m(t). This force, denoted $T_{x,m}(t)$ in Figure 3, is derived from forces arising from the contraction of the joint musculature, denoted by $f_m(t)$, and can be considered to be a function of the difference between desired joint position, specified by $X_d[m(t)]$, and actual joint position, x(t), i.e.,

$$T_{x,m}(t) = F_T\left[X_d[m(t)] - x(t)\right] \qquad [3]$$

Based upon the linkage relationship between x(t)

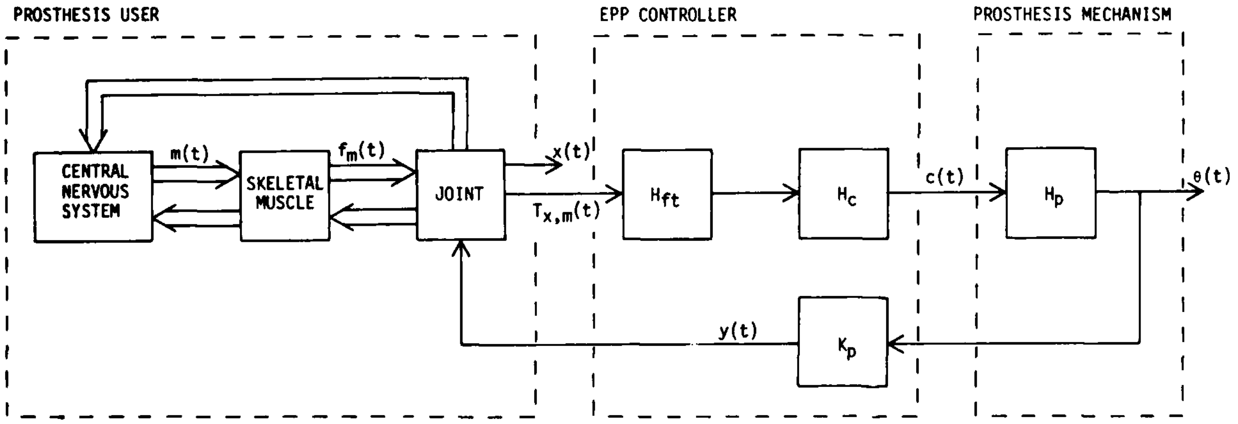

FIGURE 3
System model of the improved EPP prosthesis control system implemented in the experimental prosthesis built for this study. With this system, $T_{x,m}(t)$, the control signal driving the prosthesis is derived from the force generated within the mechanical linkage coupling anatomical joint position x(t) and the scaled prosthesis joint position y(t), when the anatomical joint is restrained from achieving the desired output function specified by m(t), the user's motor intent. The expression $f_m(t)$ represents the forces generated by the skeletal muscle in response to m(t).

and y(t) specified in Equation [1], in which x(t) is contrained to a value within $\pm\epsilon$ of y(t), the control loop for this system would be configured such that the prosthesis actuator responds in a manner that tends to minimize the difference between $X_d[m(t)]$ and x(t), and thus drives $T_{x,m}(t)$ to $F_T[0]$. An interesting aspect of this system is that although x(t) is the control variable that directly specifies the system output position, it does not appear as a direct system input. The role of x(t) is implicit in its relationship with m(t) in determining $T_{x,m}(t)$, and in its constrained relationship with y(t). Note also that $F_T[0]$, the equilibrium tension level about which the system operates, does not have to be equal to zero, as will be seen later.

The fundamental advantage of the system shown in Figure 3 is that, through proper design, ϵ could theoretically be made equal to zero, i.e., the input and output could be directly linked. Thus the user would be able to relate the position and velocity of the prosthesis output to proprioceptive sensations at all times, with no built-in error range.

It is interesting to note that the system presented in Figure 3 functions in a manner similar to that of a natural limb, as both are force-driven systems. Just as a person contracts his muscles to generate forces to move his limbs, the user of the prosthetic system would move his prosthesis by generating forces in his residual musculature. Note also that the user would be able to relate the force he was exerting to the velocity of the prosthesis response through proprioceptive sensations. Due to the dynamic response characteristics of the prosthesis mechanism, the force/velocity relationship would vary with prosthesis loading, a situation analogous to physiological motor control. Thus the user would be able to sense prosthesis loading in what should be a natural manner.

EPP control systems developed by Simpson and co-workers (4, 5, 6) and Carlson and co-workers (7, 8), respectively, combine elements of both of the system models presented in this discussion. Both of their systems utilized the error between input position and output position as the input signal to the actuator controller, and both implemented proportional control of the actuators.

Simpson's system was pneumatically powered. When the user's input exceeded the allowed input error range, he pressed against valves controlling the pneumatic actuator. The valve assemblies were coupled to the prosthesis mechanism, moving with it to establish new equilibrium positions. Proportional output control was provided. The harder the valves were pushed, the greater the resulting valve displacement and the pneumatic pressure provided, and thus the greater the output response. Although the precise position relationship between the input and output in that system would vary somewhat due to valve motion relative to the system coupling, the user was coupled to the output whenever in contact with the valves, and thus could probably detect changes in feedback pressure and valve motion and relate those sensations to prosthesis movement. That system, although technically position-dependent, has much of the same feedback characteristics as the force-driven system model described here.

In Carlson's EPP controller for an electric elbow, the difference between input and output positions was indicated by the output of a linear potentiometer, which provided a proportional signal for actuator control. The transducer used had a restoring spring which may have provided perceptible feedback pressure throughout the range of proportional control, thus coupling the input and output in a manner similar to Simpson's system.

In the experimental prosthesis built for this study, EPP control was implemented in a manner based directly on the force-driven position-servo model presented in Figure 3. The EPP position-servo relationships were implemented by providing direct cable linkages between the prosthesis actuators and a shoulder-motion transduction mechanism. The actuator control signals were derived from force transducers attached to these cables.

DESIGN OF EXPERIMENTAL EPP PROSTHESIS

EPP Prosthesis Mechanism

A photograph of the experimental prothesis built for this study is shown in Figure 4. A Liberty Mutual elbow and a Northwestern University wrist rotation unit were the powered components used in this system. The prosthesis mechanism was supported by metal straps attached to a plastic body jacket. The body jacket and support system were constructed to allow unrestricted movement of the shoulder ipsilateral to the prosthesis mechanism, while maintaining the mechanism in a fixed position relative to the thorax. The linkage cables for implementing EPP position-servo control relationships were connected at one end to pulleys fixed over the axes of rotation of the prosthesis elbow and wrist components, respectively. The other ends of these cables were routed to the prosthesis shoulder motion transduction system.

Through an iterative design process, a simple approach to shoulder motion transduction was found, based on the use of an intimately fitting cap placed over the shoulder. The linkage cable to

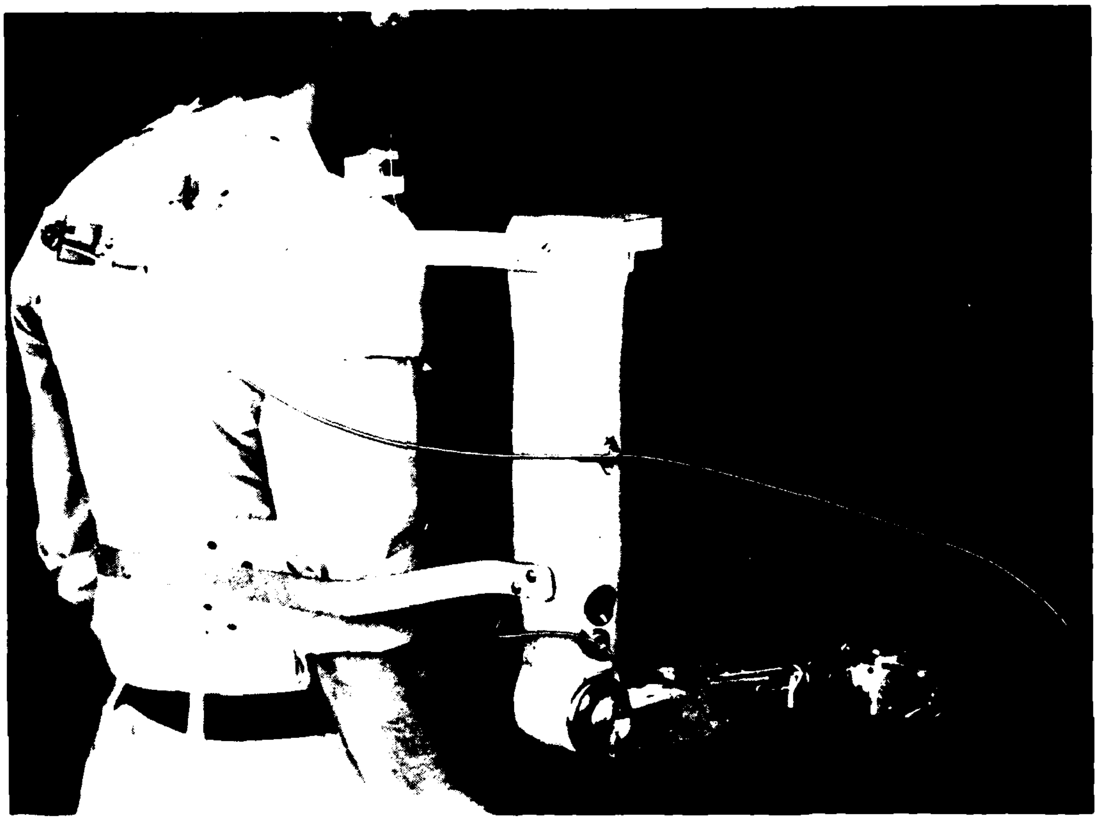

FIGURE 4
The experimental prosthesis on a test subject. Shoulder elevation controls the Liberty Mutual Elbow through the strain beam on the shoulder cap. The user's shoulder protraction-retraction controls the wrist rotator through the cable system shown. The strain beam is part of the pulley mechanism for the cable, visible on back of subject.

the elbow was attached to a strain-gage-instrumented load beam mounted directly on the cap. The linkage cable to the wrist was routed through a strain-gage-instrumented pulley mechanism and fastened to the back of the cap. This approach to shoulder motion transduction proved to be quite effective, allowing the user to faciliate the separation of the elbow and wrist control inputs by adapting his shoulder motion to the geometry of the linkage relationships.

The load-beam force transducers used in the system were instrumented with semiconductor strain gages. Based on a cantilever structure, the load beams were designed to function effectively for forces up to 200 N, although the actual forces associated with prosthesis control were much less. The gages were connected in a bridge configuration and the amplified outputs used to generate proportional actuator-control signals.

Both of the pulleys used in the control linkages had cable seating diameters slightly less than 1.5 inches (3.81 cm). Thus 135 degrees of elbow flexion, the normal range of motion of the Boston elbow, was mapped into approximately 1.75 inches (4.45 cm) of shoulder elevation-depression and 180 degress of wrist rotation was mapped into approximately 2.35 inches (5.97 cm) of shoulder protraction-retraction. Subjects using the system had no problem generating sufficient shoulder elevation to achieve the full range of elbow motion. It was somewhat difficult, however, for the subjects to generate sufficient excursion to achieve 180 degress of wrist rotation. Future systems will be configured to allow more wrist displacement with less shoulder displacement.

EPP Prosthesis Control Relationships

The control signals specifying prosthesis elbow function were determined by the tension in the cable linking shoulder elevation-depression to elbow flexion-extension, as indicated by the output of the load beam to which the cable was attached. To hold the elbow at a specific position, the user had to maintain a set tension level in the linkage cable. The linkage geometry was such that, if the user attempted to elevate his shoulder, he pulled on the cable, increasing the tension. The increased tension in the linkage cable elicited a control signal that caused the elbow to flex. As the elbow flexed, the length of the cable relative to shoulder elevation-depression position increased as it unwound from the pulley at the elbow. The user could continue elbow flexion by elevating his shoulder as the elbow flexed, thus maintaining increased tension in the cable. When the user stopped elevating his shoulder, the tension in the linkage cable rapidly decreased to the equilibrium level and the elbow stopped at a position directly determined by shoulder position. A small dead zone implemented in the controller allowed the tension in the linkage cable to vary somewhat without eliciting a response.

If the user allowed the tension in the linkage cable to drop below the equilibrium-tension level by relaxing or slightly depressing his shoulder, a control signal was generated causing the elbow to extend. As the elbow extended, the length of the cable relative to shoulder elevation-depression position decreased as it wrapped around the elbow pulley. The user could continue elbow extension by depressing his shoulder as the elbow extended, maintaining the decreased tension level in the cable. When the user actively checked shoulder depression, the tension in the cable rapidly increased to the equilibrium level and the elbow once again stopped, at a position directly determined by shoulder position.

One way of conceptualizing this control system is to consider it a type of power-assist system. In order to flex the elbow, the prosthesis user must pull on the linkage cable. The tension he produces in the cable specifies the control signal that in turn gives rise to the drive torque that flexes the elbow. As the user elevates his shoulder with elbow flexion, he is in a sense pulling the elbow up, with the control system acting as a force amplifier.

Referring to the system model presented in Figure 3, this control relationship corresponds to a case where $F_T[0]$ in Equation [3] is not equal to zero, i.e., the system operates around a nonzero equilibrium force level. Thus the user must maintain a specific cable tension level to maintain the elbow at a specific flexion angle. This might be expected to become tiring, but laboratory experience indicated otherwise. It is interesting to note that the physiological elbow functions in a similar manner.

Control of prosthesis wrist rotation was effected in a manner directly analogous to that implemented for control of the prosthesis elbow. As for elbow control, to hold the wrist at a specific position the user had to maintain a set nonzero tension level in the linkage cable. The linkage geometry was such that, if the user attempted to protract his shoulder, the tension in the control cable increased and a control signal was elicited that caused the wrist to pronate. As the wrist pronated, the length of the control cable increased relative to shoulder protraction-retraction position. The user could continue wrist pronation by protracting his shoulder as the wrist pronated, maintaining the increased tension level in the cable. If the user stopped protracting, the tension in the linkage cable rapidly decreased to the equilibrium level and the wrist stopped at a position directly determined by shoulder position. Control of wrist supination using shoulder retraction was analogous, simply reversing the process.

With the position-servo controllers implemented, it was possible for the user to depress his shoulder faster than the prosthesis elbow could extend, or he could retract his shoulder faster than the prosthesis wrist could supinate. When such a situation occurred, the linkage cable slackened and the precise relationship between shoulder position and prosthesis position was lost. The response of the control system to such a situation was to generate control signals causing the prosthesis to respond at maximum velocity until it "caught up" with the shoulder, as indicated by the tension in the linkage cable. Although the position-servo relationship could be "beaten" in one direction, the user could always reestablish the relationship at any time by taking up the slack in the linkage cables. As long as the user maintained any nonzero tension in the linkage cables, he remained linked to the prosthesis through proprioceptive sensations.

This control scheme was felt to be an efficient and effective means of implementing EPP control relationships. It was not felt that sufficient functional improvement would result from implementing linkages that actively checked shoulder depression and retraction, as well as elevation and protraction, to warrant the added complexity of such an interface mechanism.

For prosthesis elbow control, the actuator controller had an equilibrium tension level, $F_T[0]$, of approximately 20 N. Modulation of the linkage cable tension, through a range of approximately 35 N centered about the equilibrium level, yielded the full range of actuator control signals. For prosthesis wrist control, the actuator controller had an equilibrium tension level, $F_T[0]$, of approximately 10 N. Modulation of the linkage cable tension, through a range of approximately 10 N centered about the equilibrium level, yielded the full range of actuator control signals. Small response dead zones were implemented about the equilibrium tension levels in each of the controllers.

Experimental Velocity Controlled System

To gain further insight into the effectiveness and advantages of EPP control, velocity control of the experimental mechanism was also implemented. The velocity controlled system was essentially equivalent to the EPP controlled system except that the EPP linkage cables to the prosthesis elbow and wrist were removed and replaced by cables that were anchored to the humeral section of the prosthesis. In this system, the signals controlling actuator function were still derived from the tension in these cables. However, because the cables no longer linked prosthesis position to physiological joint position, the tensions in the cables were solely a function of force exerted by isometric contraction of the joint musculature. Referring to Figure 3, the modification made in implementing velocity control is equivalent to opening the system feedback loop between the prosthesis mechanism, H_p, and K_p in the prosthesis controller. It was felt that opening the feedback loop in this manner would make it possible to effectively ascertain the relative effects of EPP control on prosthesis function through comparison with open-loop data.

EVALUATION OF EXPERIMENTAL SYSTEM

To evaluate the effectiveness of EPP control, as implemented in the experimental prosthesis, one- and two-dimensional random tracking experiments were performed analogous to those performed in analyzing physiological control of the elbow and wrist. Several brief blind-positioning experiments were also performed. For comparison purposes, equivalent experiments were performed using velocity control of the same prosthesis mechanism.

All of the data presented in this section were obtained from the same subject, who first performed all of the experiments with the EPP-controlled system and then repeated the experiments using the velocity-controlled system. This subject also performed equivalent experiments with his physiological elbow and wrist, making it possible for the investigators to compare prosthesis performance directly with physiological performance. Several other subjects evaluated the prosthesis on a qualitative basis.

Evaluation Procedure

In these experiments, the subject monitored task performance via an oscilloscope display on which a circle target and crosshair follower were presented. Potentiometers attached to the experimental prosthesis were interfaced to effect goniometers providing output signals linearly related to prosthesis elbow and wrist angular position. During experiments, these signals controlled the position of the follower in the system display in one or two dimensions, depending on the experimental task. In all of these experiments, the goniometer and display-gain characteristics were precisely the same as those used for the analogous physiological experiments.

The specific procedure followed in performing the random tracking experiments with the experimental prosthesis was directly equivalent to that followed for random tracking with the physiological elbow and wrist described in detail in Doubler and Childress (3). One-dimensional tasks were performed in which target motion along the display X-axis was tracked with prosthesis wrist pronation-supination and along the display Y-axis with prosthesis elbow flexion-extension. Two-dimensional tasks were performed in which target motion was tracked in the X-Y plane with both prosthesis functions simultaneously. The same continuous, low-pass-filtered, random-input signals were used to control target motion in these experiments as were used in the previous tracking experiments.

Prosthesis tracking was limited by the dynamic response characteristics of the powered components, which in turn were affected by loading. No terminal device was attached to the prostheses during these experiments and thus, essentially, no external load was seen by the wrist. The load seen by the elbow consisted of the forearm, wrist unit, and wrist goniometer. An analysis of the dynamic capabilities of the components used in this system (Doubler (9)) showed that the maximum velocity of the wrist unit was 1.2 rad/sec. The maximum velocity of the elbow under test conditions was 1.3 rad/sec. An analysis of the wrist and elbow as components in a simple closed-loop position-servo system showed that the wrist had the capability to very accurately track input signals with cutoff frequencies up to 1 Hz. The results for the loaded elbow were similar.

The random tracking experiments centered on analyzing a person's ability to control his physiological upper limb based on the performance of closed-loop manual-control tasks. In those tasks, the control loop was closed by visually monitoring the system output. A fundamental premise of this study is that the wealth of proprioceptive feedback inherently provided by EPP prosthesis control alleviates some of the necessity for visual monitoring that exists with current prosthesis control techniques. It is not assumed that EPP control will completely eliminate this dependence; a certain amount of visual monitoring is generally necessary for precise control, even of natural upper-extremity function. As part of this study, experiments were performed in which subjects had to control the position of their physiological upper limb or a prosthetic substitute with their vision occluded. The fundamental task in these experiments consisted of attempting to move the prosthesis or physiological joint from a known starting position to various target positions without visually monitoring the motion. Due to the scope of this paper and the limited nature of these experiments, the results will only be discussed in qualitative terms. (For a detailed presentation see Doubler (9)).

Evaluation Results

The data for random tracking with the experimental prostheses were analyzed using the same protocol that had been used in analyzing the data for tracking with the physiological upper-extremity (Doubler and Childress (3)). That analysis approach was based on the "quasi-linear" model for describing tracking performance (see Elkind and Forgie (10)). Several linear parameters, such as the system transfer function and the input-output coherence function, were initially derived and studied in searching for a meaningful and straightforward representation of control performance.

One linear parameter which seemed particularly relevant to this study was the maximum information transmission rate. The subject's task in these experiments was to produce a signal at the system output that matches the input as closely as possible. That task is analogous to transmitting the input information across the channel with as little error as possible. Based on the premise that the effectiveness of prosthesis control is in large part determined by how well the user can communicate his motor intent to his prothesis, information transmission is a concept philosophically aligned with this analysis of prosthesis system performance. The precise relationships and protocol used to derive the information transmission rates in this study are given in Doubler and Childress(3).

The considerably better tracking performance achieved with EPP control of prosthesis function, as compared with velocity control, can be seen in Figure 5, in which the information transmission rates obtained for one-dimensional tracking are plotted as a function of input signal cutoff frequency. For comparison purposes, data obtained for tracking with physiological elbow and wrist motion by the same subject are shown with the data for tracking with the EPP-controlled and velocity-controlled prostheses. The information transmission rates obtained with EPP control exceeded those for velocity control for all tasks, although the difference decreased for the higher frequency inputs. In observing the experiments, it appeared that this decrease was due to performance limitations imposed by the dynamic response characteristics of the prosthesis components.

It is interesting to see that the information transmission rate for tracking with the EPP-controlled prosthesis actually exceeded that for tracking with the physiological elbow for input signals with cutoff frequencies of 0.96 and 1.36 Hz. These results were probably due to the subject adopting a tracking tactic with more nonlinear characteristics when tracking those higher frequency signals with his physiological elbow, which has dynamic capabilities considerably exceeding those of the prosthesis elbow. Analysis of the mean square tracking error for these tasks, derived by summing the square of the difference between input and output signals, was less for tracking with the physiological elbow than for tracking with the prosthesis elbow, supporting this hypothesis.

The total information transmission rates for the two-dimensional tracking tasks performed with the EPP-controlled prosthesis, with the velocity-controlled prosthesis, and with the physiological elbow and wrist are shown in Figure 6. The plotted values were obtained by summing the information transmission rates for the individual elbow and wrist components of the two-dimensional response. Again, these data clearly indicate the improved tracking performance achieved with EPP control as compared with velocity control.

On a qualitative basis, the results of the blind positioning experiments also indicated the improved control of prosthesis function provided by EPP control as compared with velocity control. This finding was particularly evident for the two-dimensional blind positioning tasks, in which the subject was required to position both the prosthesis elbow and the wrist simultaneously.

In the two-dimensional experiment for velocity control (blind positioning), the subject relied heavily on incidental feedback, such as motor vibration and noise, in controlling and sensing the position of the prosthesis. However, the prosthesis wrist ran much more quietly than the elbow; during two-dimensional experiments, the elbow noise masked that from the wrist and the subject often had difficulty knowing if the wrist was running and in what direction it was moving. That effect proved to be very frustrating and led to large response errors.

No such problem was indicated for two-dimensional blind positioning with EPP control. It was

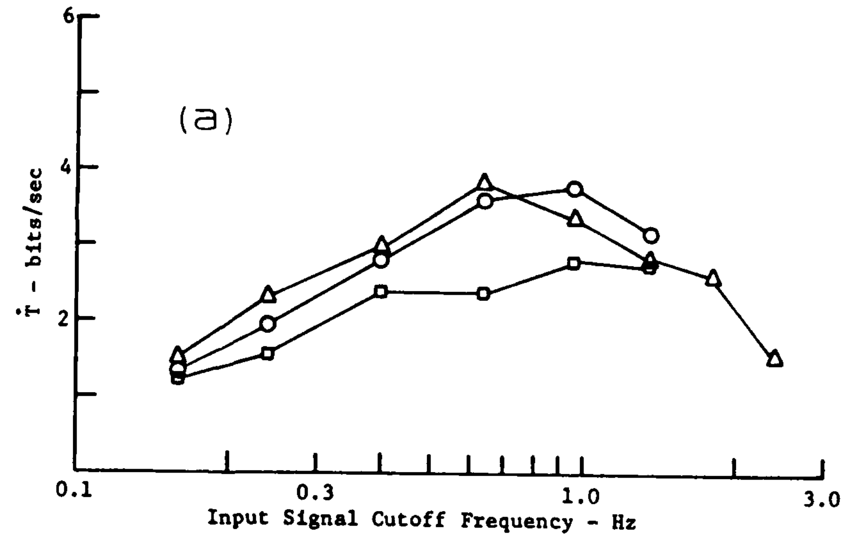

FIGURE 5a
Comparison of information transmission rates for one-dimensional tracking tasks performed by the same subject with the EPP (○) and velocity (□) controlled prosthesis elbow and with the physiological elbow (△).

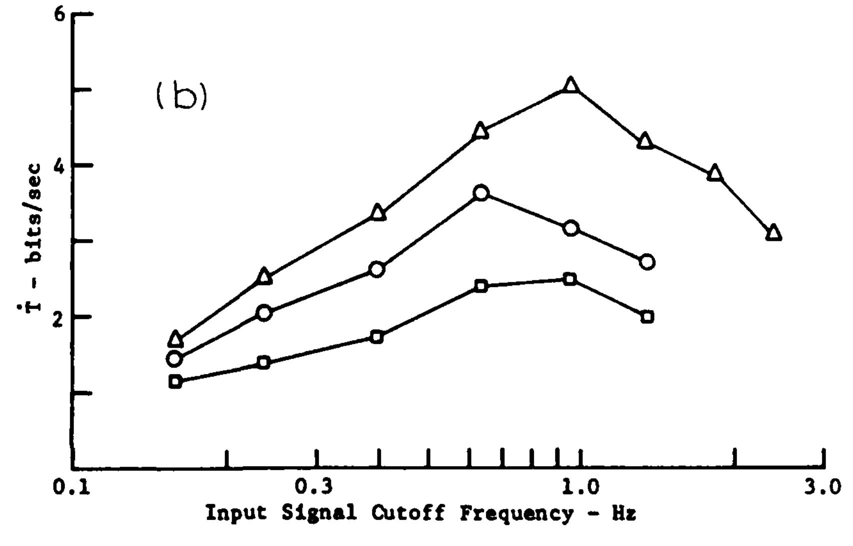

FIGURE 5b
Comparison of information transmission rates for one-dimensional tracking tasks performed by the same subject with the EPP (○) and velocity (□) controlled prosthesis wrist and with the physiological wrist (△).

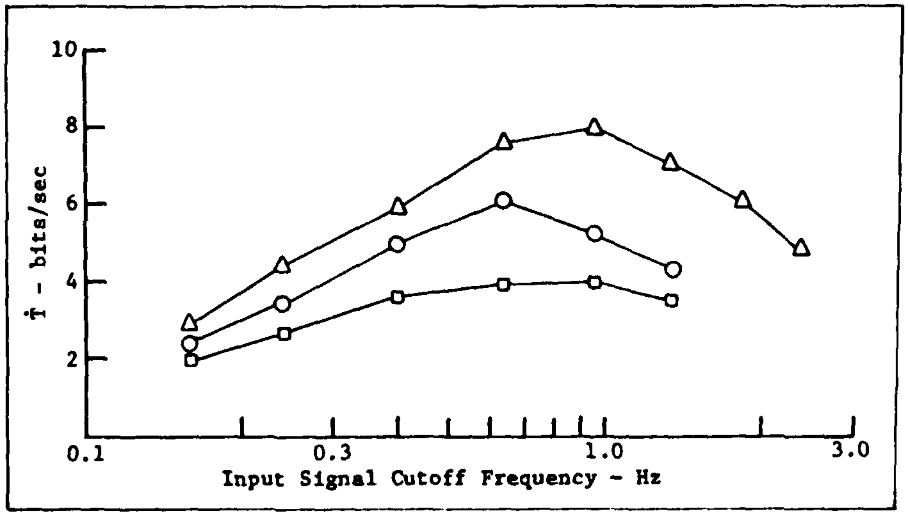

FIGURE 6
Comparison of the total information transmission rates for two-dimensional tasks performed by the same subject with the EPP (○) and velocity (□) controlled prostheses and with the physiological elbow and wrist (△). These data were derived by summing the rates for the individual channels in the two-dimensional tasks.

evident that the subject did not have to rely on incidental feedback in controlling prosthesis function with EPP control. This seems to be a very important observation, indicating a significant potential for realizing subconscious control of prosthesis function with EPP control.

It is likely that better results could have been achieved for two-dimensional blind positioning with velocity control by implementing a velocity control system which allowed the user to more easily separate and individually control prosthesis elbow and wrist function. However, the goal in prosthesis design is to provide effective coordinated control of multiple functions. The results of this study underscore the difficulties implicit in efforts to achieve that goal with open-loop velocity control of function.

Qualitative Analysis of Control

Physiologically-based difficulties, associated with producing certain combinations of shoulder protraction-retraction and elevation-depression positions and motions, influenced tracking ability in certain areas of the tracking plane. Specifically, it was difficult for subjects to simultaneously depress and protract, or elevate and retract, their shoulders. These limitations made it difficult for the subjects to simultaneously extend the prosthesis elbow and pronate the prosthesis wrist, or to flex the elbow and supinate the wrist, with the implemented EPP control system. It seems possible that with exercise and use, a person could develop improved flexibility and range of motion in his shoulder, and so overcome this problem. It may also be possible to achieve better function by altering the control-mapping relationships coupling prosthesis and shoulder function.

In working with the experimental prosthesis, a qualitative attribute of EPP control that was very obvious was the inherent stability of prosthesis control and function. Because the subjects were not accustomed to independently generating the shoulder movements used in controlling the system, there was some interaction between the controlling motions, and thus some coupling between the prosthesis functions, when a subject first tried operating the prosthesis. At no time, however, was system stability a problem, as it could have been in an open-loop system. Because the output positions of the prosthesis components were directly linked to shoulder position, even if there was considerable coupling between functions there were never any problems with stabilizing the system or with feelings of uncontrollability.

It was also evident that, with some experience, persons using the system readily adapted their controlling motions to the response characteristics of the prosthesis to effect improved performance. The effectiveness of the shoulder motion transduction mechanism used clearly resulted from allowing the user to facilitate the separation of the elbow and wrist control inputs by adapting his shoulder motion to the geometry of the linkage relationships.

As has already been mentioned, if the prosthesis user depressed or retracted his shoulder rapidly, he could violate the EPP linkage relationship which coupled prosthesis position to physiological joint position. It was observed that, in attempting to track input signals with high cutoff frequencies, the subjects at times did indeed move their shoulders faster than the prosthesis components could respond, causing the linkage cables to go slack. There was no indication, however, that this aspect of the implemented EPP control relationships affected system controllability. Again it seems reasonable that, in normal use, a person would quickly adapt to how fast the components could respond, and would not often feel a need to exceed those capabilities.

DISCUSSION

There is much yet to be done to make the experimental system presented here into a practical system. It appears, however, that the force-driven control configuration developed and implemented for that system has significant potential for practical application. The use of cable linkages to couple residual physiological joint motion to prosthesis function is a design attribute directly compatible with the current expertise of the prosthetics industry. Force transducers of the type used in the experimental system could almost certainly be made small and rugged enough for use in a practical system. A simple switch configuration could be used in place of a force transducer, to implement on/off control of prosthesis function which would be adequate for powered components with low dynamic response.

The most significant problem associated with the practical implementing of EPP control appears to be the construction of comfortable and cosmetic harness and socket arrangements that provide sufficient support for the prosthesis mechanism and effective EPP coupling between residual joint motion and prosthesis function. The trend in recent prosthesis development has been towards self-contained, self-suspended systems that minimize harnessing requirements and are generally more comfortable and easier to don and doff. In contrast, it seems that significant harnessing requirements are an inherent aspect of EPP control.

Terminal-Device Control

A topic not previously addressed in this discourse is the manner of effecting terminal-device control in a system utilizing EPP control. Effecting terminal-device control requires another control source or site. In a system for shoulder disarticulation amputees in which both elevation-depression and protraction-retraction of the shoulder ipsilateral to the amputation site are coupled to prosthesis function in EPP position-servo relationships, terminal-device control based on physiological motion would probably require involving the contralateral upper-extremity, or the use of a physiological motion not normally associated with upper-extremity function, such as chest expansion. Terminal-device control effected in this manner would also complicate the already significant harnessing requirements.

Note, however, that the parameter of interest in terminal-device control is generally not position, but rather prehension or grasping force. Based on that premise, and on the principle of myoprehension (Childress et al (11)), the use of myoelectric control for terminal device operation may be particularly effective and appropriate for use in a prosthesis in which EPP control is implemented for the other functions. Although the ipsilateral shoulder musculature is already involved in the EPP control scheme, it seems likely that some type of

3-state myoelectric control scheme based on muscle activity from the ipsilateral side (e.g. using residual deltoid) could be implemented. If the myoelectric signal electrodes were incorporated in the prosthesis socket, no additional harnessing would be required.

Although the emphasis throughout this study has been on the application of EPP control in prostheses for shoulder disarticulation amputees, it could also prove quite effective in systems for above-elbow amputees. EPP control of elbow flexion could significantly aid above-elbow amputees who have difficulty generating sufficient force or cable excursion for conventional cable-operated control. EPP control would also eliminate interaction between terminal device and elbow operation inherent in the conventional dual-control system. A system combining EPP control of elbow flexion with myoelectric terminal-device control derived from the biceps and triceps represents an aesthetically pleasing, practical, and potentially effective prosthetic system for above-elbow amputees.

CONCLUSION

The experiments described in this paper clearly demonstrated the improved control effectiveness that can be achieved with EPP control as compared to velocity control of prosthesis function. Based on the experience of this study, the authors believe that EPP position-servo control has significant potential as a practical means of achieving natural, effective control of externally powered prostheses ■

REFERENCES

1. Simpson DC: The control and supply of a multimovement externally powered upper limb prosthesis. Proc 4th Int Symp External Control of Human Extremities. Yugoslav Committee for Electronics and Automation, Belgrade. pp. 247–254, 1973.
2. Simpson DC: The choice of control system for the multi-movement prosthesis: Extended physiological proprioception (EPP). In: The Control of Upper-Extremity Prostheses and Orthoses (P. Herberts et al. eds) Springfield, Illinois, C.C Thomas, pp. 146–150, 1974.
3. Doubler JA and Childress DS: An analysis of extended physiological proprioception as a prosthesis control technique. J Rehabil R&D, 21(1), 1984.
4. Simpson DC: An experimental design for a powered arm prosthesis. Health Bull Scottish Home and Health Dept. 23(4):75–78, 1965.
5. Simpson DC: An externally powered prosthesis for the complete arm. Biomed Eng 4:106–110,119, 1969.
6. Simpson DC and Kenworthy G: The design of a complete arm prosthesis. Biomed Eng 8(2):56–59, 1973.
7. Carlson LE: Position Control for Above-elbow Prostheses. Final Report VA Contract V101(134)P-561, 1980.
8. Carlson LE and Primmer KR: Extended physiological proprioception for electric prostheses. Preprint of paper presented 6th Int Symp on External Control of Human Extremities. Dubrovnik, Yugoslavia, 1978.
9. Doubler JA: An analysis of extended physiological proprioception as a control technique for upper-extremity prostheses. Ph.D. Dissertation. Northwestern University, Evanston, Illinois, 1982.
10. Elkind JI and Forgie CD: Characteristics of the human operator in simple manual control systems. IRE Trans Automatic Control. AC-4, pp. 44–55, 1959.
11. Childress DS, Billock JN, Hajost MJ: Non-complex myoelectric control concepts for below-elbow, above-elbow, and shoulder-disarticulation amputees. Proc 28th ACEMB, New Orleans. p. 32, 1975.

Journal of Rehabilitation Research
and Development, Vol. 21, No. 1
BPR 10-39 pages 33—41

Immediate, Early, and Late Postsurgical Management of Upper-Limb Amputation[a]

J. M. MALONE, M.D.*
L. L. FLEMING, M.D.**
J. ROBERSON, M.D.**
T. E. WHITESIDES, Jr., M.D.
J. M. LEAL, C.P.*
J. U. POOLE, O.T.R.*
R. STERNSTEIN GRODIN, O.T.R.**

* Section of Vascular Surgery
Tucson VA Medical Center and
University of Arizona

** Department of Orthopedic Surgery
Atlanta VA Medical Center and
Emory University, Atlanta

Abstract—This series is composed of 47 patients who underwent immediate, early, or late postoperative prosthetic fitting after upper-limb amputation. The purpose of this review was to analyze the impact of rapid postoperative fitting on upper-limb amputation, and to assess general prosthetic prescription and guidelines for upper-limb amputees. It would appear that in adult amputations there is a "Golden Period" of fitting for upper-limb prosthetic devices and this period appears to be within the first month after amputation. There appears to be no difference in ultimate prosthetic acceptance rate or use patterns as a function of the type of prosthesis initially provided. Based upon this combined review between the Tucson and Atlanta VA Medical Centers, the authors would suggest that all upper-limb amputees be fitted as rapidly as possible (within 30 days) with conventional prosthetic devices, and when they have shown motivation and skill in the use of conventional devices, then to re-evaluate them for appropriate externally powered prosthetic components.

INTRODUCTION

Immediate fitting of a prosthesis at the time of amputation is a relatively recent trend. The first immediate-fit prosthesis for lower-limb amputation was reported by Berlemont in 1958 (1). The technique did not catch on until several years later, after a report by Weiss (37). In 1965, Burgess et al achieved accelerated rehabilitation, increased acceptance of the prosthesis, and less psychological trauma associated with loss of limb when immediate fitting was performed (4). Little has been written about immediate fitting of upper-limb amputees, even though the technique is probably better suited to these patients than to lower-limb amputees.

Based upon previous statistical reports, it can be estimated that there are approximately 400,000 amputees in the United States (13,16,21–23). Each year 30,000 to 40,000 new amputations are performed and approximately 15 percent (6,000) are major upper-limb amputations (10–13, 15, 21–23, 32). In general, the success rate for adult rehabilitation after upper-limb amputation is 50 percent or less (3,5,8,10,14,15,26).

Limb replantation after upper-limb amputation has become well established in many major medical centers. However, only 10–15 percent of all upper-limb amputees are, in reality, good candidates for major limb replantation (proximal to the wrist)

---

[a] The research described was supported in part by the Veterans Administration.

NOTE: Address correspondence to Dr. James M. Malone, M.D., Chief, Vascular Surgery (112), VA Medical Center, Tucson, Arizona 85723.

and, in general, the success rate declines rapidly as the level of amputation moves proximally up the arm (2,9,24,28). Success after replantation should not be defined as merely limb replant survival, but rather integration of replanted parts into normal use patterns and activities of daily living. The decision for replantation or amputation should be based on consideration of whether a prosthesis or a replanted limb will permit the patient to function best, and not the technical satisfaction to be gained from replantation. In centers specializing in limb replantation, the reported percentages of limb survival and extremity function range from 50 to 92 percent and from 60 to 78 percent respectively (2,9,24,25,28). The incidence of partial success, (for example, salvage of an elbow with hand loss in an above-elbow injury) is impossible to ascertain due to limited reports. It is entirely appropriate, therefore, that new emphasis be placed on upper-limb prosthetics and rehabilitation after upper-limb amputation.

The purpose of this report is to review the literature on immediate and early postsurgical fitting of prostheses to upper-limb amputees, and to review the authors' experience with upper-limb immediate, early, and late postsurgical prosthetic fittings utilizing conventional, electric, and myoelectric components. This report represents the combined results from two separate institutions which have comparable programs for the treatment of upper-limb amputees: the Tucson VA Medical Center /University of Arizona, and the Atlanta VA Medical Center/Emory University.

MATERIALS AND METHODS

Definitions

"Prosthetic use" is defined as percentage use of any type of prosthesis: 100 percent use represents 12 hours of wearing time per day, 7 days per week (84 hr/wk).

The time of prosthetic fitting will be divided into four categories as follows:

1. "Immediate postsurgical fitting (IPOP)," in which the prosthesis is applied at the time of surgery;
2. "Early prosthetic fitting" in which the prosthesis is applied any time up to 7 days after surgery;
3. "Intermediate prosthetic fitting" in which the prosthesis is applied 8–30 days after surgery; and
4. "Late prosthetic fitting" in which the prosthesis is applied more than 30 days after surgery.

"Rehabilitation" is defined as patient return to job/work or pre-amputation activities. "Rehabilitation time," therefore, refers to the time interval between injury and rehabilitation (as defined).

Success, failure, and rejection are defined as follows: "Success" constitutes use of a prosthesis in the patient's pre-amputation job or activities, "failure" indicates no prosthesis use, and "rejection" represents voluntary prosthesis disuse in a patient who had previously learned to use a prosthesis.

Patient Data

The series is composed of 47 patients who underwent immediate, early, or late postoperative prosthetic fittings. The age range was 4–82 years and the mean age was 31 years. There were 21 right and 26 left upper-limb amputations. The level and etiology of amputation, prior occupation, and the time of postsurgical prosthetic fitting are shown in Tables 1–3.

SURGICAL TECHNIQUES

In general, maximum limb length was preserved. The proximal limitation for salvage of a below-elbow amputation was the distal insertion of the biceps tendon on the proximal radius. No effort was made to salvage elbow disarticulation levels, and a limb which could not be salvaged at the specified below-elbow level was converted to an above-elbow amputation, with approximately 2 inches of shortening from the tip of the olecranon in order to allow for the cosmetic placement of a prosthetic elbow unit.

Muscle fixation was used in all amputations and included myoplasty (46) or myodesis (1). All nerves were gently pulled into the amputation wound, transected, and allowed to retract out of the wound. The nerves were managed with either circumferential ligature (26) or electrocautery to the cut nerve end (21). All traumatic injuries were closed primarily and were drained using a closed suction system. In order to decrease skin tension, the subdermal fascia was approximated with absorbable suture and the skin was approximated with metal skin staples.

PROSTHETIC TECHNIQUES

Immediate Postsurgical Prosthetic Fitting (IPOP)

Standard immediate postoperative prosthetic techniques, as utilized for lower-limb amputation, formed the basis for immediate, early or intermediate upper-limb prosthetic fittings (17,18,23). Owen's silk was used as a skin separating agent. Lamb's wool (26) or Dacron waste (21) was used for distal stump padding prior to application of a spandex stump sock. Felt pads were used for bony-prominence relief. The prosthetic shell was constructed with an inner layer of elastic plaster (Orthoflex ®) (Johnson & Johnson) and an outer layer of Scotchcast™ (3M). The combination of Orthoflex® and Scotchcast™ provided a lightweight but durable prosthesis.

The prosthetic devices utilized in this study included the following components: Otto Bock 6-volt hand; Otto Bock 6-volt myoelectric "Greifer;" Liberty Mutual myoelectric "Boston" elbow (switch or myoelectric control) with adaptation for hook or hand as a terminal device; the VANU/Fidelity Electronics[b] 8-volt hand/elbow combination; VANU/Fidelity Electronics 12-volt switch-control hand; VANU/Fidelity Electronics 12-volt myoelectric control hand; Dorrance 5X hook; and Pope conventional internal-lock elbow with lift assist. There was no uniform pattern of fitting; however, most below-elbow amputees at the Atlanta VA/Emory University were fitted with the VANU/Fidelity Electronics 12-volt myoelectric hand, while amputees at the Tucson VA/University of Arizona received varieties of the prosthetic components listed above, depending on amputation level and job skills.

Early, Intermediate and Late Prosthetic Fitting

Once wound-healing was achieved, all upper-limb prostheses were constructed using standard prosthetic fabrication techniques. In general, early and intermediate prostheses were constructed using the United States Manufacturing Co. (USMC) Aqualite™ kit, and the Scotchcast™ socket was replaced as required to maintain good prosthetic fit. Adaptions in prosthetic technique for most temporary prostheses were as discussed for immediate postoperative postsurgical fitting. Late prosthetic fitting was usually accomplished using either standard double socket lamination techniques or modification of the USMC Aqualite™ kit for construction of a permanent prosthesis.

Convential Prosthetic Fitting

For the below-elbow patient, conventional prosthetic fitting was accomplished using a USMC Aqualite™ kit. Versions of this kit are available which allow use of a hook, a VANU/Fidelity Electronics 12-volt switch-control hand, or an Otto Bock hand or "Greifer" (switch or myoelectric control) as a terminal device. The forearm of the prosthesis (and cable base plate) are secured to the cast using Elastoplast® tape. A cosmetic-appearing prosthesis can be made by padding the forearm with foam and then covering the prosthesis with

TABLE 1

Level of amputation	Number	Percent
Partial hand	1	(2%)
Below elbow	32	(68%)
Above elbow	13	(28%)
Forequarter	1	(2%)
Total	47	

Etiology of amputation	Number	Percent
Trauma	32	(68%)
Electrical burn	5	(11%)
Neurologic	4	(9%)
Congenital	3	(6%)
Other	2	(4%)
Burn	1	(2%)
Total	47	

TABLE 2
Occupation at time of injury

	Number		Percent	
Non-working		14		(30%)
Student	9		(19%)	
Retired	4		(9%)	
Congenital (< 18yr)	1		(2%)	
Working		33		(70%)
Desk job	10		(21%)	
Manual labor	23		(49%)	
		47		(100%)

TABLE 3
Time of postsurgical prosthetic fitting

Immediate (surgery)	20
Early (0-7 days)	0
Intermediate (8-30 days)	8
Late (> 30 days)	19
Total	47

---

[b] VANU indicates that the device was developed through VA-sponsored research at Northwestern University. In this case the commercial version is a Fidelity Electronics product.

Coban® (3M). A single axillary harness was used for control of a conventional prosthesis with a hook as terminal device. A switch mounted on the prosthesis, with actuation by a cable from a single axillary harness was used for control of an Otto Bock or VANU/Fidelity Electronics hand. Below-elbow prostheses were constructed to be self-suspending using a modified Münster technique. For patients with very short below-elbow residual limbs, the elbow was initially locked in 90 degrees of flexion in order to obtain a self-suspending prosthesis.

For the above-elbow amputee, a Pope internal-lock elbow was used with lift assist and a standard forearm (which can be precut for length). The immediate-fit group received a hook as the terminal device. Some patients in the early and intermediate prosthetic fitting groups received a hook or a switch-controlled hand (Otto Bock or VANU/-Fidelity Electronics) or both, and a few patients were fitted with a switch-controlled or myoelectric elbow (Liberty Mutual or VANU hand/elbow combination).

Externally Powered Components

When patients were fitted immediately postoperatively with an Otto Bock myoelectric hand or Liberty Mutual myoelectrical elbow, and there was no chance for preoperative myotesting, a "guess" was made about the best flexion/extension control sites. Such choices of myoelectric control sites were much more consistently successful in below-elbow amputees than they were for above-elbow amputees.

It is not advisable to use Orthoflex® plaster for construction of a myoelectric immediate or temporary prosthesis, because both the Otto Bock and Liberty Mutual myoelectric electrodes can be damaged by water. Fabrication techniques are available which allow incorporation of the Otto Bock or Liberty Mutual electrodes in plaster, but these techniques are time-consuming. The authors have found that the simplest approach is to place dummy electrodes over the myoelectric control sites and to construct the initial prosthetic shell with Scotchcast™ rather than plaster. The area over the dummy electrodes was cut out while the prosthetic shell was soft. When the prosthetic shell was dry (in 10–15 minutes), the electrodes were placed over the myocontrol sites and secured to the prosthetic socket with Elastoplast® tape (Beiersdorf, Inc., BDS Plaza, Norwalk, Connecticut) or Scotchcast™.

For the patient fitted immediately with the VANU/Fidelity Electronics myoelectric hand, specific adaptations were made to allow immediate fitting of electrodes without water problems. Electrode pins were made from ¾ inch aluminum ledger screws which had flow-form 3/16 inch plastic heat-shrunk tubing insulation applied to the pins. The pins were placed through the spandex stump sock directly over control sites on the forearm and incorporated in the cast. Electrodes were anchored in the below-elbow cast using elastic plaster. The myoelectric terminal device was then attached to the socket and the electrodes were connected to the pins.

RESULTS

This review covers a time period from 1966 to 1982. The range, and mean patient followup time, are shown in Table 4.

All traumatic wounds closed primarily healed without complication (0/20). There was no injury to the wound or amputation residual limb due to casting techniques and/or immediate fitting of a prosthesis (0/20). There were no postoperative deaths and no morbidity in the surgical group (0/20). One patient who sustained a traumatic above-elbow amputation required late revision (1 year) for ectopic bone formation which involved his median and ulnar nerves (1/20:5 percent).

The time from injury to prosthetic function, injury to rehabilitation, and percentage of successful rehabilitation are shown in Table 5. There was no significant difference in injury-to-function, injury-to-rehabilitation, or in rate of rehabilitation, between immediate and intermediate postsurgical fitting. The difference in successful rehabilitation between those patients who were fitted within 30 days of surgery (immediate and intermediate) and those patients fitted more than 30 days after surgery (late) was significant (26/28 = 93 percent vs 8/19 = 42 percent) ($P<0.001$) (Chi Square, Yates Correction).

For patients fitted with a prosthetic device within 1 month of surgery, the mean time from-injury-to-work is 6 months and for time-at-work, 17 months. Of the patients who were injured on the job and treated with prosthetic fitting within 30 days of surgery, 100 percent (13/13) returned to work, while only 15 percent of patients (3/20) injured on the job and referred for prosthetic fitting more than 1 month after surgery returned to work ($P<0.001$) (Chi Square, Yates Correction).

Of the group of 13 patients who were fitted with a prosthetic device within 30 days of surgery and who all returned to work, 6 of the 13 (46 percent) returned to the same manual job, 1 of the 13 (8 percent) returned to a manual job of increased difficulty, 4 of the 13 (31 percent) returned to

TABLE 4
Time of prosthesis use

	Number of patients	Followup (months)	
		Range	Mean
Immediate (surgery)	20	1-120	32
Early (0-7 days)	0	—	—
Intermediate (8-30 days)	8	1-35	13
Late ($>$30 days)	19	1-108	24

TABLE 5
Fit, function and rehabilitation

	IPOP*	Intermediate*	Late*
Number of patients	20	8	19
Injury to function	1 wk	2 wks	1 yr
Injury to rehabilitation	4 mos	4 mos	1 yr
Successful rehabilitation	18/20	8/8	8/19

IPOP & Intermediate (26/28) versus Late (8/19):$P < 0.001$

*Mean time in weeks or months

manual jobs of decreased difficulty, and 2 patients (15 percent) went from manual jobs to desk jobs.

Prosthetic use patterns as a function of length of time of prosthetic fitting after surgery were reviewed. When each postsurgical prosthetic fitting category (immediate, intermediate, and late) was subdivided into two groups based upon the type of initial prosthetic component provided (conventional body-powered or externally powered) there was no significant correlation between ultimate use of conventional body-powered or externally powered prostheses and the type of prosthesis with which a patient had been initially fitted—in the immediate and intermediate postsurgical groups. All of these patients who returned to work developed use patterns for both their conventional and externally powered prostheses which were based upon the particular job skills needed by each amputee. But amputees who had been fitted more than 30 days after surgery (late group) almost exclusively used their externally powered prosthetic components in preference to their conventional body-powered prosthetic devices, irrespective of the type of prosthesis that was first provided for them.

All of the patients had phantom paresthesias, but none of the surgical patients who received immediate or intermediate prosthetic fitting reported painful phantom syndromes. A significant portion of the patients transferred sensory feelings from their phantom limb to their prosthetic components, and it was not uncommon for these patients to complain that their prosthetic hand or arm itched or was cold. This "sensory transformation" of the phantom sensation was seen only in those patients fitted with prosthetic devices within 1 month of amputation and was not seen in patients who were fitted more than 30 days after amputation. In addition, painful phantom symptoms were common in patients fitted with a prosthesis more than 1 month after amputation.

Most patients preferred externally powered components for activities of daily living and social occasions. Patients doing heavy manual labor had difficulty with their externally powered components due to component failure and breakage, and most of those patients used their conventional body-powered prosthesis for work. Patients fitted with both the Otto Bock hand and Otto Bock "Greifer" (5) preferred the Otto Bock "Greifer." As might be expected, all patients indicated that they were extremely pleased with the cosmetic value of their electric/myoelectric prostheses compared to standard body-powered prostheses.

DISCUSSION

Rehabilitation after upper-limb amputation is more difficult than after lower-limb amputation (3). In general, the highest success rates are achieved when the patient is fitted as rapidly as possible after surgery (2,3,6,8,12,26,29–35). In most centers, a prosthetic device is not provided for the patient until after complete wound healing and stump maturation (3–6 months), and that approach often results in late fitting of amputees and ultimately poor rehabilitation results. A review of the current literature on upper-limb amputation limited to cases where patients were treated with this "standard approach" suggests that their rate of rehabilitation approximates only 50–60 percent by 6 months after amputation (3, 8,9,13,26). In most settings, by the time amputees are fitted with a prosthetic device (medium prosthesis delivery time is 6 months (10)) they have become skilled at being one-handed individuals and they see very little use for "an assistive prosthetic device" (3,11,25,26).

Multiple factors influence the acceptance and use of a prosthesis by upper-limb amputees. Vitali et al, in 1978, reported a 67 percent rejection rate for standard below-elbow prostheses (36). Significantly better results have been achieved using a myoelectric hand. Northmore-Ball et al, reported a series of 53 myoelectric fittings with only an 8 percent rejection rate (27). A 10-year review of the English language literature documents that immediate postoperative prosthetic fitting after upper-limb amputation can significantly improve rehabilitation rate and shorten rehabilitation time (Table 6). That review documented 182 reported cases of immediate postsurgical prosthetic fitting for upper-limb amputation for which data on level of amputation and rehabilitation rate and time was available in 142 cases (78 percent). Thirty-five cases (35/142=25%) reported the use of externally powered components, and the rest of the cases involved the use of conventional prosthetic devices. The overall rehabilitation time ranged from 1 to 30 days, but in general was less than 10 days. The fitting time for permanent prostheses ranged from 2 to 30 weeks, but in most cases, was less than 12 weeks; and most importantly, the overall amputee rehabilitation rate was 93 percent (132/142). Our data is consistent with the existing literature; however, there are some significant differences between our data and the literature and for this reason several points need to be emphasized.

We have analyzed successful rehabilitation as a function of the time of postsurgical prosthetic fitting. Our patients were divided into four groups corresponding to the time interval between surgery and prosthetic fitting: immediate postoperative (surgery), early (0–7 days), intermediate (8–30 days), and late (>30 days). The success rate for patients fitted within 1 month of amputation was 93 percent (26/28) and the success rate for those patients fitted after 1 month was only 42 percent (8/19). This difference is statistically significant (P <0.001) (Chi Square, Yates Correction). In general, patients fitted within 1 month of amputation required approximately 1–2 weeks to learn how to use their prosthesis, they became functional in most activities of daily living and job skills within 1 month, and they attained rehabilitation (return to pre-injury activity or work) in 4 months. Perhaps more important was our success rate in returning to work patients who were injured on the job. For patients injured on the job who were fitted within 30 days of surgery, the mean time from injury to work was 4 months, the average time at work was 17 months and the success rate was 100 percent (13/13). In contrast, for such patients fitted with prosthetic devices more than 1 month after surgery, the time from injury to work ranged from 6 months to 2 years and the success rate in returning to work was only 15 percent (3/20).

There were two rehabilitation failures in patients fitted within 30 days of surgery (2/28=7 percent); however, these patients represent rejection of their prosthetic components, not rehabilitation failures. Prosthetic rejection in the early postoperative period appears to be dependent upon patient age (6 years and 82 years), patient motivation, and our ability to provide longterm prosthetic followup and occupational therapy. Failures in the late group (11/19=58 percent) appear to be primarily due to poor patient motivation and lack of need for "assistive prosthetic devices" on the part of patients who have become one-handed. It is impossible to know the role of financial coverage in the success or failure of utilization of prosthetic components, but the authors' review suggests that there may be a correlation between non-patient-dependent financial coverage (i.e., insurance, workman's compensation, etc.) for prosthetic devices and the ultimate success of prosthetic use.

Analysis of prosthetic use patterns, as a function of time of prosthesis fitting after surgery and of the type of prosthesis, suggests that ultimate patient prosthetic use (of either conventional or myoelectric components) is not based upon the type of component with which a patient is initially fitted, but rather is based upon the individual requirements of each patient with respect to his work or home activities. In other words, there is no "standard" prosthetic prescription for upper limb amputees.

It must also be emphasized that the aggressive approach employed in this series for the primary closure of traumatic wounds is unconventional. The lack of a significant difference in rehabilitation rates between immediate postoperative fittings and early-and-intermediate postoperative fitting suggests that early secondary closure is an acceptable alternative to primary closure, if a question of wound toilet exists.

We believe that, compared to upper-residual-limb wrapping after amputation (conventional prosthetics), there are multiple advantages to early postoperative prosthetic fitting (within 30 days of surgery) and they include decreased edema, decreased postoperative pain and phantom pain, accelerated wound healing, improved patient rehabilitation, decreased length of hospital stay (and perhaps of hospital costs), increased prosthetic use, maintenance of some continuous type of proprioceptive input through the residual limb, and improved patient psychological adaptation to amputation.

It would appear that, in adult amputations, there is a "Golden Period" of fitting for upper-limb pros-

TABLE 6
Upper limb immediate postsurgical fitting

	Type of amputation**					Rehab time (days)	Rehab rate	Permanent prosthesis (weeks)
	WD	BE	ED	AE	S/D			
Fleming LL et al (12) (1980) Beneficial*	—	15	—	1	—	rapid	15/16*	—
Tooms RE (37) (1972) Beneficial no data	—	—	—	—	—	—	—	—
Loughlin E et al (20) (1969)	—	2	—	—	—	3-5	2/2*	4
Robinson KP et al (31) (1975)	—	1	—	2	—	3	3/3	4–6
Burkhalter WE et al (3) (1976)	14	38	6	29	9	—	87/96	2–16
Jacobs RE et al (14) (1975) (10 other cases no data)	1	1	—	2	—	6–9	4/4	4–30
Sarmiento A et al (33) (1969)	2	1	—	1	—	1–30	4/4	3–8
Reyburn TV (30) (1971) (30 cases no data)	—	—	—	—	—	—	—	—
Malone JM (23) (1981)	—	4	—	7	1	2–14	12/12*	4–6
Childress DS et al (16) (1969)	2	—	—	—	—	1	2/2*	4
Childress DS (1) (1970)	1	2	—	—	—	1	3/3*	4
TOTAL CASES	20	64	6	42	10			

(182 cases; 142 with data)

REHABILITATION TIME
1–30 days (most < 10 days)
REHABILITATION RATE
132/142 (93%)
TIME TO FIT PERMANENT PROTHESIS
2-30 weeks (most < 12 wks)

---

* Externally powered (35/142 = 25%)

**Amputation types: WD = wrist disarticulation; BE = below elbow; ED = elbow disarticulation
AE = above elbow; S/D = shoulder disarticulation + forequarter amputation

thetic devices and this "Golden Period" appears to be within the first month after amputation. There appears to be no difference in ultimate prosthetic acceptance rate or use patterns as a function of the type of prosthesis initially provided (conventional or externally powered). The authors' current philosophy is to fit all patients as rapidly as possible (within 30 days) with conventional prosthetic devices, and when they have shown motivation and skill in use of the conventional device, then to re-evaluate them for an appropriate externally powered prosthetic component. A plea for immediate, early, or intermediate prosthetic application is stressed by the authors, to whom prosthetic fitting within 30 days of amputation appears to be the most important aspect in the treatment process which ultimately leads to successful upper-limb amputation rehabilitation■

ACKNOWLEDGEMENT

The authors would like to acknowledge the following individuals: Margaret Giannini, M.D., Director, Rehabilitation Research & Development Service, Veterans Administration Central Office; Mr. Ted Green, President, United States Manufacturing Corporation; Mr. Larry Mott, Director of Education, Otto Bock of North America; T. Walley Williams, III, Project Director, Liberty Mutual/Boston Elbow Project, without whose help this project would not have been possible. The authors wish to thank Mrs. Karen Sue Burkett, without whose tireless help, support, and many hours of typing, this manuscript would not have been possible.

REFERENCES

1. Berlemont M: Notre experience de l'appareillage precacedes amputes des membres inferierus aux etablissement Helio-Mario de Berck. Ann Phys Med 4:Oct, Nov, Dec. 1961.
2. Buchler U, Phelps DB, Boswick JA: Digital replantation: Guidelines for selection and management. Rocky Mt MFD J:17–22, 1977.
3. Burkhalter WE, Mayfield G, Carmona LS: The upper extremity amputee. Early and immediate post-surgical prosthetics fitting. J Bone Jt Surg 48-A:46–51, 1976.
4. Burgess FM, Traub JE, Wilson AB Jr.: Immediate post-surgical prosthetics in the management of lower extremity amputees. Veterans Admin. Training Manual TR:10–15, Washington DC, 1967.
5. Carter I, Torrance WN, Merry PH: Functional results following amputation of the upper limb. Ann Phys Med 10:137–141, 1969.
6. Childress DS, Hampton FL, Lambert CN, Thompson RG, Schrodt MJ: Myoelectric immediate post-surgical procedure: A concept for fitting the upper extremity amputee. Art Limbs 13:55–60, 1969.
7. Childress DS: Experience with immediate postsurgical fitting of myoelectric prostheses. Proc 23rd Ann Conf AEMB, Washington, D.C., 12:245, 1970.
8. Childress DS, Billock JM: "Improved management of upper extremity amputees". Digest 9th International Conf on Med and Biol Engineering. Melbourne, Australia, 1971.
9. Chung-Wei C, Yun-Qing Q, Zhong-Jia Y: Research lab for replantation of severed limbs: Extremity replantation. World J Surg 2:513–524, 1978.
10. Davies EJ, Friz BR, Clippinger FW: Amputees and their prostheses. Artif Limbs 15:19–48, 1970.
11. Engstrand JL: Rehabilitation of the patient with a lower extremity amputation. Murs Clin N Amer 11:659–669, 1976.
12. Fleming LL, Whitesides T, et al: Immediate postoperative fitting of the VANU myoelectric hand in upper extremity amputees. Presented at the National Assembly, American Orthotics and Prosthetics Association, New Orleans, Louisiana, Mariott Hotel, September, 1980.
13. Glattly HW: A statistical study of 12,000 new amputees. S Med J 57:13 ,78, 1964.
14. Jacobs RR, Brady WM: Early postsurgical fitting in upper extremity amputations. J Trauma 15:966–968, 1975.

15. Jones RF: The rehabilitation of surgical patients with particular reference to traumatic upper limb disability. Aust N.Z. J Surg 47:402–407, 1977.
16. Kelsey JL, Pastides H, Kreiger N, Harris C, Chernow RA: Upper extremity disorders. A survey of their frequency and cost in the United States. Yale School of Medicine and Department of Epidemiology and Public Health. St. Lous, MO, CV Mosby Co., 1980.
17. Leal JM, Malone JM: VA/USMC electric hand with below elbow cineplasty. Bull Pros Res 18:52–56, 1981.
18. Leal JM, Malone JM: Adaptation of the VA/USMC electric hand to the Liberty Mutual myoelectric Boston Elbow. Bull Prosth Res BPR 10-35, 18:56–60 Spring 1981.
19. Lipp MR, Malone SJ: Group rehabilitation of vascular surgery patients. Arch Phys Med Rehab 57:180–183, 1976.
20. Loughlin E, Stanford JW III, Phelps M: Immediate postsurgical prosthetics fitting of a bilateral below-elbow amputee, a report. Artif Limbs 12:17–19, 1968.
21. Malone JM, Moore WS, Goldstone J, Malone SJ: Therapeutic and economic impact of a modern amputation program. Ann Surg 189:798–802, 1979.
22. Malone JM, Moore WS, Leal JM, Childers JS: Rehabilitation for lower extremity amputation. Arch Surg 116:93–98, 1981.
23. Malone JM, Childers SJ, Underwood J, et al: Immediate postsurgical management of upper extremity amputation: Conventional, electric, and myoelectric prostheses. Orthot & Prosth 35:1–9, 1981.
24. Malt RA, Remensnyder JP, Harris WH: Longterm utility of replanted arms. Ann Surg 176:334–342, 1972.
25. McNeill IF, Wilson JSP: The problems of limb replacement. Brit J Surg 47:365–377, 1970.
26. Munrow B, Nasca RJ: Rehabilitation of the upper extremity traumatic amputee. Mil Med 140:402–409, 1975.
27. Northmore-Ball MD, Heger H, Hunter GA: The below elbow myoelectric prosthesis: A comparison of the Otto Bock myoelectric prosthesis with the hook and functional hand. J Bone & Joint Surg 62-B:363–367, 1980.
28. O'Brien BMc, Macleod AM, Hayhurst JW, Morrison WA, Ishida H: Major replantation surgery in the upper limb. The Hand 6:217–228, 1974.
29. Peizer E, Pirrello T: Principles and practice in upper extremity prostheses. Symposium on amputation surgery and prosthetics. Orthop Clin N Amer 3:397–417, 1972.
30. Reyburn TV: A method of early prosthetics training for upper extremity amputees. Artif Limbs 15:1–5, 1971.
31. Robinson KP, Andrews BG, Vitali M: Immediate operative fitting of upper limb prosthesis at the time of amputation. Brit J Surg 62:634–637, 1975.
32. Ruby LK: Acute traumatic amputation of an extremity. Orthop Clin N Amer 9:679–692, 1978.
33. Sarmiento A, McCollough NC III, Williams EM, Sinclaire WF: Immediate postsurgical prosthetics fitting in the management of upper extremity amputees. Artif Limbs 12:14, 1968.
34. Stein RB, Charles D, Hoffer JA, et al: New approaches for the control of powered arm prostheses, particularly by high level amputees. Bull Prosth Res BPR 10-33, Spring 1980.
35. Tooms RE: Amputation surgery in the upper extremity. Orthop Clin N Amer 3:383–395, 1972.
36. Vitali M, Robinson KP, Andrews BG, et al: Amputations and prostheses. London: Bailliere, Tindall, pp 9–10, 1978.
37. Weiss M: The prosthesis on the operating table from a neurophysical point of view. Report of the workshop panel on lower extremity prosthetic fitting. Committee on Prosthetics Research and Development, National Academy of Sciences, February 1966.

Journal of Rehabilitation Research
and Development, Vol. 21, No. 1
BPR 10-39 pages 43—50

Evaluation of Transducer Performance for Buttock-Cushion Interface Pressure Measurements[a]

NARENDER P. REDDY, Ph. D.[b]
VINCENT PALMIERI
GEORGE VAN B. COCHRAN, M.D., Sc. D.[c]

Soft Tissue Mechanics Research Group
Orthopaedic Engineering and
Research Center
Helen Hayes Hospital
West Haverstraw, NY 10993

Abstract—To assess the performance of transducers used clinically to measure pressure at the skin-cushion interface of seated patients, transducers were placed between slabs of gel and/or foam materials compressed between platens. The recorded pressures consistently exceeded the nominal pressures calculated using the surface area of the slabs. This overestimation, observed in both miniature diaphragm transducers and air cell transducers, appeared to result from preferential loading of the transducer due to insufficient structural compliance in the environs. On the other hand, air cell transducers placed at a skin-foam interface beneath the thighs of human subjects gave readings which agreed closely with subcutaneous tissue pressure measurements obtained from a wick catheter inserted at the same location. These results suggest that, although pressure measurements are prone to error due to load sharing, results obtained clinically from subjects on soft cushions are reasonably accurate because of the high compliance of human soft tissue and the foam. Under low loads these distribute the pressure equitably and avoid concentrations of load on the transducer.

INTRODUCTION

Pressure measurements at the buttock-cushion interface are used widely in the management of decubitus ulcers in wheelchair-bound patients. In current rehabilitation practice, cushion prescriptions are based largely on interface pressure measurements obtained by means of a wide variety of transducers; this makes the accuracy and reliability of transducer responses essential factors in effective cushion prescription. Unfortunately, these transducers have different response characteristics and the response of a given transducer type may also depend on the type of cushion under test.

In a prior study, this group compared the clinical performance of Kulite electronic transducers with that of pneumatic Scimedics Pressure Evaluator Pads in the course of clinical measurements involving seated subjects (3); that work suggested that some differences in transducer performance in relation to support material may exist. Also, Patterson and Fisher (4) have recently reported experiments designed to evaluate transducer performance at the interface between a pneumatic cuff and skin; they found a wide difference in results between various miniature-diaphragm, straingage-type transducers. Their study did not include pneumatic transducers or assess the effects of different interfacing materials.

---

[a] This work was supported in part by NIHR Research Grant #23P-59173 and Veterans Administration Contract V5244-P-1375

[b] Dr. Reddy is presently Associate Professor, Biomedical Engineering Research Institute, University of Akron, Akron, OH 44325.

[c] Dr. Cochran is Director, Orthopaedic Engineering and Research Center, Helen Hayes Hospital, and Professor of Clinical Orthopaedic Surgery, Columbia University, College of Physicians and Surgeons, New York, N. Y.

The many types of transducers available for interface pressure measurement include those based on electrical resistance and capacitance, as well as pneumatic "air-cell" and air flow types (1,2). Of these, the semiconductor (based on electrical resistance) and "air-cell" transducer types are in extensive clinical use to measure buttock-cushion interface pressures.

In addition to questions about transducer performance raised by these studies, there is another unknown involved in the measurement of buttock-cushion interface pressure: the relationship of the measured pressures to actual pressures within the tissues. There is clearly a need to compare the interface pressure data with subcutaneous pressure measurements in the loaded tissues. Consequently, the purpose of this study was twofold: first, to evaluate further the relative performance of various interface pressure measurement transducers when used on different seating surfaces, and second, to investigate the relationship between the interface transducer readings and subcutaneous pressures. The first question required bench testing with transducers at different types of interfaces, the second required in vivo tests using human volunteers. Each type of experiment will be described and discussed separately.

TRANSDUCER PERFORMANCE AT AN INTERFACE

Materials and Methods

In the present study, several types of transducers were tested; they are listed in Table I, together with their sources and dimensions. Two of those tested, the miniature single-cell and the Scimedics transducers, are air-cell types. Such a device has electrical contacts bonded to opposing inner surfaces of a small flexible bladder which can be hand-inflated with air. As the bladder is inflated, the internal pneumatic pressure at which the electrical contacts separate is assumed to equal the external pressure on the bladder. These transducers do not provide a continuous measure of the interface pressure.

The Precision and Kulite transducers are semiconductor, piezoresistive, diaphragm-type transducers. The electrical resistance of the sensing material changes as the load applied to the diaphragm changes. The change in resistance is measured via a Wheatstone bridge and requires an excitation voltage. The signal from the bridge can be amplified and recorded continously.

Transducers were calibrated using a dead-weight, compressive loading device designed previously by the authors (5). The transducer under

TABLE 1

Transducer model	Dimensions	Source
LQS-125-200 0–200 PSI	O.D., 4 mm Diaphragm diam; 2 mm Thickness: 0.8 mm	Kulite Semiconductor Products, Inc. 1039 Hoyt Ave. Ridgefield, NJ 07657 (201) 945-3000
Model 156 0-25	Length: 9.0 mm Width: 5.0 mm Thickness: 1.0 mm Diaphragm diam: 4 mm	Precision Measurement Co. P.O. Box 7676 Ann Arbor, Michigan 48107 (313) 995-0041
Scimedics Pressure Evaluator Pad	90 mm x 100 mm oval Thickness: 0.5 mm	Scimedics Contemporary Products P.O. Box 4444 Anaheim, CA 92801
Miniature single air cell (experimental design)	Diam. of contact area: 4.00 mm Width of cell: 23 mm Length of cell: 280 mm Thickness: 0.25 mm	Experimental design, not commercially available

test was sandwiched between two square slabs or blocks of soft material. The upper block was chosen to represent human flesh, while typical cushion materials were used as the lower block. Measurements were taken at the interface between layers as would be done between buttock and cushion during routine clinical measurements. Loads were applied on the upper block using a round plate which **exceeded** the dimensions of the compressed blocks, so that the area of the blocks of material determined the nominal applied stress or pressure. Dimensions of the slabs were 127 mm x 127 mm x 25 mm (5 x 5 x 1 in) for most tests; in certain cases, tests were repeated with 100 x 100 mm (4 x 4 in) blocks.

PVC (polyvinyl chloride) gel was used as an upper slab to represent human soft tissues. The PVC gel is an incompressible hyperelastic material with nonlinear material characteristics. The material characteristics of PVC gel (6) were thought to be a reasonable representation of the incompressible hyperelastic and nonlinear mechanical properties of human soft tissues, for the purpose of the bench tests.

Selected cushion-material types of gel, foam, and a hard surface were used as lower blocks to simulate a seating surface. Under compression, the foam material used in this study had a nonlinear stress-strain relationship. At a strain level of 0.2, the tangent Young's modulus was 11.3 kPa and the Poisson's ratio was 0.15 for the foam. At the same level, the PVC gel had a tangent Young's modulus of 22 kPa, and a Poisson's ratio of 0.50.

To study the comparative performance of the four types of transducers, each device was first calibrated pneumatically. In the case of the electronic transducers, the excitation voltage recommended by the manufacturer was used. After the pneumatic calibration, each transducer was placed at the interface between the two materials, and loads were applied as described. The total applied load was divided by the surface area of the interface between the slabs to calculate the nominal applied compressive stress. Only one transducer was sandwiched between the blocks at any given time. The response of each transducer was noted with applied stresses of 0 to 20.7 kPa (0–156 mmHg) in steps of 3.45 kPa (26 mmHg), for each of the three seating materials—foam, gel, and hard surface. For each test, adequate time was allowed so that measurements were essentially made in static equilibrium.

Five observations were made for each load case. Statistical significance of the differences, between the means for each load case, were determined using t-tests.

Results

With a single exception, all transducers gave significantly high readings when compared to the actual values of nominal (applied) stress calculated as load/block area ($P < 0.005$). The transducer responses (means and standard deviation from 5 repeated measurements, with gel-gel, gel-foam, and gel-hard surface interfaces) are presented in Tables 2, 3, 4. Performances of all transducers were closer to "ideal" (nominal) expected pressure at the gel-foam interface than at the other two types of interfaces. Transducer accuracy was very poor at the gel-gel and gel-hard surface interface conditions, leading to errors approaching 100 percent as shown in the tables.

With respect to the effect of slab size, performance of the Scimedics transducer was improved at the interface between the smaller (100 x 100 mm) blocks, as compared to the larger 127 x 127 mm blocks (Tables 2-4).

Discussion

Cushion performance is often judged, using the interface pressure measurement data with the implicit assumption that interface pressure transducers are accurate and reliable. The results of the present study suggest that the performance of a given transducer is highly dependent on the properties of interface materials and on the ratio of transducer surface area to the contact area of the interfacing materials (contact geometry).

All transducers have a finite thickness, which creates a certain "gap" between the two surfaces. The transducer therefore tends to support the load, causing local concentrations of stress, with the intensity of the concentrated stress depending on the compliance and thickness of the transducer. This problem tends to be minimized if the transducer surface area is either very small, or is equal to the total area of the interfacing surfaces.

For example, when the surface area was 1.61 x $10^{-2}m^2$, (25 in^2), the Scimedics transducer produced a larger error than it did with the smaller block (1.00 x $10^{-2}m^2$), because in the latter case the entire load was transmitted by the transducer which was nearly the same size in support surface. With the larger block, part of the load was supported by the material. Ideally, the transducer should either support all of the load, or should share it uniformly with the support surface, in effect matching its structural impedance. In the former case, the transducer actually becomes a load cell as the transducer surface area approaches the interface contact area.

The enveloping property of the interfacing material (its ability to "wrap around" the trans-

TABLE 2
Transducer responses* at gel-foam interfaces

Applied Nominal Stress kPa	Precision kPa	Kulite kPa	TIRR Single Cell kPa	Scimedics in 127 x 127mm blocks kPa	Scimedics in 100x100mm blocks kPa
3.45	3.60 +/- 0.24	3.7 +/- 0.1	2.17 +/- 0.31	3.55 +/- 0.07	3.55 +/- 0.11
6.89	8.39 +/- 0.34	7.7 +/- 0.24	6.45 +/- 0.57	8.16 +/- 0.15	7.55 +/- 0.09
10.34	13.78 +/- 0.71	12.98 +/- 0.34	11.27 +/- 0.66	13.7 +/- 0.37	11.9 +/- 0.15
13.79	18.9 +/- 0.81	18.21 +/- 0.48	16.33 +/- 1.0	19.65 +/- 0.26	16.57 +/- 0.16
17.24	24.4 +/- 1.16	23.69 +/- 0.6	21.96 +/- 1.52	25.83 +/- 0.11	21.13 +/- 0.12
20.68	29.78 +/- 1.32	29.31 +/- 0.72	27.47 +/- 1.82	30.52 +/- 1.97	25.82 +/- 0.11

*Each of these quantities represents the mean of 5 repeated tests. Standard deviations are shown next to the mean values. Each of these readings is significantly different from the corresponding applied nominal stress ($P < 0.005$).

TABLE 3
Transducer responses* at gel-gel interfaces

Applied Nominal Stress kPa	Precision kPa	Kulite kPa	*Miniature* Single Cell kPa	Scimedics/ 127 x *127mm* blocks kPa	Scimedics/ 100x100mm blocks kPa
3.45	6.48 +/- 0.3	6.82 +/- 6.82	6.34 +/- 0.42	8.14 +/- 0.3	5.53 +/- 0.20
6.89	12.16 +/- 0.35	12.32 +/- 0.84	12.75 +/- 0.39	16.33 +/- 0.37	11.13 +/- 0.21
10.34	17.67 +/- 0.47	17.54 +/- 0.32	18.64 +/- 0.35	23.84 +/- 0.4	16.73 +/- 0.22
13.79	22.68 +/- 0.52	22.59 +/- 0.25	24.37 +/- 0.48	31.58 +/- 0.49	22.46 +/- 0.12
17.24	26.99 +/- 0.83	27.46 +/- 0.34	29.96 +/- 0.27	39.03 +/- 1.62	27.98 +/- 0.13
20.68	31.44 +/- 0.85	31.98 +/- 0.45	35.31 +/- 0.4		33.70 +/- 0.11

*Each of these quantities represents the mean of 5 repeated tests. Standard deviations are shown next to the mean values. Each of these readings is significantly different from the corresponding applied nominal stress ($P > 0.005$).

ducer), is an important factor affecting transducer performance. PVC gel apparently did not envelop the air cell transducer as well during inflation as did foam. Also, the gel apparently enveloped the semiconductor transducers poorly. With the gel-gel interface, the structural impedance mismatch created by transducers between the surfaces is great, causing larger errors. In the case of gel-foam, the foam envelops the transducer, reducing the load-supporting effect of the transducer when compared to other surfaces. (All transducers gave the lowest readings with gel-foam.) As is known, an ideal transducer for measuring interface pressures would have infinitesimal thickness and match the structural properties of the material. Unitl that is achieved, these tests suggest that some correction factor may be necessary when making clinical seating pressure measurements—if more than comparative measures of pressure on the same seating material are required.

Since buttock shape and surface are different from those of the slabs used in tests, it is difficult to directly extrapolate the bench-test results to human cases. In fact, prior clinical measurements (3,5) suggest that material-related variations generated in measurements on actual buttock-cushion

TABLE 4
Transducer responses at gel-hard interfaces*

Applied Nominal Stress kPa	Precision kPa	Kulite kPa	Miniature Single Cell kPa	Scimedics/ 127 x 127mm blocks kPa	Scimedics/ 100x100mm blocks kPa
3.45	5.29 +/- 0.97	6.38 +/- 0.87	5.96 +/- 0.4	6.76 +/- 0.6	5.07 +/- 0.17
6.89	9.74 +/- 1.02	11.98 +/- 1.02	11.69 +/- 0.79	13.10 +/- 0.61	10.08 +/- 0.21
10.34	13.92 +/- 1.14	18.87 +/- 1.18	18.08 +/- 1.93	19.62 +/- 0.95	15.01 +/- 0.32
13.79	18.2 +/- 1.28	24.96 +/- 1.23	24.34 +/- 1.11	26.25 +/- 0.81	19.99 +/- 0.24
17.24	22.83 +/- 1.3	31.59 +/- 1.21	31.50 +/- 1.3	32.35 +/- 0.87	25.08 +/- 0.17
20.68	27.49 +/- 2.12	37.63 +/- 1.16		38.71 +/- 0.87	30.12 +/- 0.26

*Each of these quantities represents the mean of 5 repeated tests. Standard deviations are shown next to the mean values. Each of these readings is significantly different from the corresponding applied nominal stress. ($P > 0.005$).

interfaces exist, but are far lower than those seen in this series of bench tests. The explanation for this important observation probably lies with the special nature of living skin and subcutaneous tissue. Although the PVC gel material simulates human soft tissues to some extent, there are wide differences in certain respects. First, the soft tissues of the buttock consist of three distinctive layers with different material properites (7). Second, soft tissues are made up of anisotropic, viscoelastic, and discontinuous materials containing numerous blood vessels, and other structures such as glands and fascia layers. Third, the stress/strain characteristics of the soft tissues and the gel differ considerably in the lower strain regime (Fig. 1)

In the low-strain regime, the elastic modulus for skin tends to be very low, whereas PVC gel has a more linear response throughout the loading curve. Furthermore, during loading, events such as blood displacement, flow of interstitial fluid, and slip between tissue layers also may occur. As a result of these more favorable mechanical characteristics, soft tissues can envelop an object more completely than the PVC gel, and are thus better at reducing any mismatch in structural impedance and thus at equilizing load support. Since stress

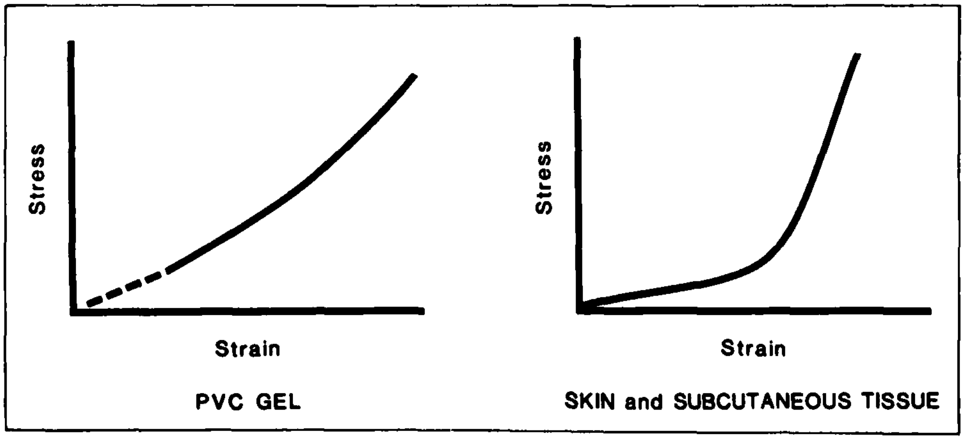

PVC GEL

SKIN and SUBCUTANEOUS TISSUE

FIGURE 1
Comparison of stress-strain characteristics in compression of PVC gel versus skin and subcutaneous tissue. Note the tendency toward greater compliance in the low-strain area for the soft tissues. PVC gel has a more linear response.

concentrations decrease with increasing envelopment of the transducer, transducer performance tends to improve when in contact with actual flesh. Nevertheless, our data indicate that currently used pressure transducers have a tendency to cause overestimation of the interface pressure, and that responses do vary with the cushion material. Further work is needed to document appropriate correction factors for clinical measurements on different materials (the next portion of this paper reports a first step in that direction). Caution is also required in interpreting measurements from individuals with lean or atrophied buttocks, or measurements in other body areas where the enveloping qualities are reduced, as between a limb stump and a prosthesis socket.

COMPARISON OF INTERFACE PRESSURES WITH SUBCUTANEOUS PRESSURES

Materials and Methods

Wick catheters are widely used for measuring subcutaneous interstitial fluid pressure in vivo (8). The procedure, as described in detail by Snashall et al (9), involves placing fluid-filled wick catheters in the subcutaneous tissues using thin-walled needles; the catheters are prepared by pulling dermalon fibers into one end of 0.58-mm I.D. polyethylene tubing.

In this study, wick catheters were employed to investigate the relationship between pressure at a skin-foam interface (as measured by a Scimedics Pressure Evaluator Pad) and the subcutaneous tissue pressure.

To perform these tests, wick catheters were placed bilaterally in the posterior thighs of human subjects. The thigh was selected as an experimental site because the underlying bone structure of the femur permitted more accurate locating of the wick in relation to bone than could be achieved reliably over the ischial tuberosities. (In the buttocks, the local position of the wick catheter in relation to the ischium would be difficult to determine). The catheters, the associated physiological pressure-measurement transducer, and the calibration system were all sterilized; then the transducers were calibrated in a sterile system immediately prior to insertion. Each wick catheter was filled with heparinized saline and connected to a separate physiological transducer (Alitech M520E) by means of a fluid bridge. The transducer signals were amplified and recorded by means of a Gould Transducer Amplifier (Model 13–4615–50) and Gould-Brush Recorder (Model 260). For calibration purposes, the wick catheter was inserted through a rubber stopper into an extension tube filled with saline and connected to a manometer.

With the subject in a prone position, local anesthesia was induced with one percent Xylocaine in the thighs bilaterally at the point of catheter entry. The pressure readings were adjusted to zero with transducers and wicks positioned at the level of the insertion site. The wick catheters were then placed bilaterally in the thighs through thin-walled 18-gauge needles. Care was taken to see that the wicks were close beneath the dermis and at least 30–50 mm away from the point of entry into the skin. The wick location could easily be identified, and could be tested for response by applying slight finger pressure to the skin, while monitoring transducer readings. After adjustment of the wick catheters, deflated Scimedics transducers were positioned on the skin over the wicks bilaterally and anchored minimally with tape. The subject was then transferred to a special seat. Small quantities of heparinized fluid (0.1–0.2 ml) were injected into the tissues through the wick catheters at regular time intervals to retard the possibility of clotting, and to insure measurement of total tissue-pressure. The experimental setup is shown in Figure 1.

Single, sequential readings of interface and wick pressures were obtained bilaterally in three subjects with feet hanging free and with added loads of 67 and 111 Newtons (15 and 25 lbs.-f) placed on the feet in order to produce nominal pressures beneath the thigh which approached those normally occurring in the human buttocks while seated on a cushion. The air-cell transducer was always deflated (thickness 0.5 mm) at the time of wick catheter pressure measurements. When one foot was being loaded, the other was kept hanging free. On each subject, the procedure was repeated with pads of three different thicknesses to generate three different pressure ranges for each of the three test loads; the subject was allowed to stand between sets of measurements on each pad.

Results

Table 5 shows the relationship between mean subcutaneous pressures as measured by the wick catheter and the mean interface pressures as measured by a Scimedics Pressure Evaluator Pad, under three loading conditions from three human subjects. Pressures ranged from 3.98 kPa with no load on the foot to 9.97 kPa with a 111.2-N load on the foot. The interface and subcutaneous pressure measurements in the thighs correlated well. The differences between subcutaneous and inter-

TABLE 5
Subcutaneous and interface pressure measurements* beneath loaded thigh.

	No Load on Foot		Load of 66.72 N on the Foot		Load of 111.2 N on the Foot	
Cushion Type	Subcutaneous Pressure kPa	Interface Pressure kPa	Subcutaneous Pressure kPa	Interface Pressure kPa	Subcutaneous Pressure kPa	Interface Pressure kPa
2" Foam (Rogers #3040)	4.44	4.60	5.60	5.21	6.54	6.24
1/2" Foam (Rogers #1836)	4.17	3.98	6.04	5.69	9.92	8.28
1" Soft Open Cell Foam	4.20	4.80	7.83	7.10	9.97	8.13

* Subcutaneous pressure was measured with a wick catheter. Thigh-cushion interface pressure was measured with "air-cell" (Scimedics Corp.) transducer. These values represent the mean of readings taken from three human subjects. The differences between interface and subcutaneous pressures were statistically insignificant ($P > 0.75$). Thin foams were employed as cushion materials so as to generate interface pressures comparable to the clinically observed buttock-cushion interface pressures. (1 kPa=7.6 mmHg)

face readings were obviously small and proved to be statistically insignificant as revealed by paired and unpaired two-tailed t-tests ($P > 0.25$).

Discussion

The wick catheter technique is a reliable method of measuring interstitial fluid pressure. The wick permeates a relatively large volume of interstitial fluids and permits measurement of pressure developed in these fluids. This technique has been used by a number of investigators for measuring interstitial fluid pressures in animals and in humans (9,10).

In our laboratory, the reliability of the wick method was studied further in animal experiments using pigs. It was found that approximately 70 percent of pressure applied by an external circumferential pressure cuff was transmitted to the interstitial fluids in normally-hydrated states. However, if the microenvironment of the wick was altered by injecting very small volumes of saline (0.02 ml), then nearly 100 percent of the externally applied pressure appeared to be transmitted to the fluid (11, 12). Thus, in these experiments with human subjects, the fluid pressure measured by the wick equaled the total pressure in the tissue—a combination of interstitial fluid pressure and externally applied pressure. Care was taken to place the catheter close to the surface beneath the dermis to minimize effects of stress distribution by the tissues.

The loads hung on the feet were selected to

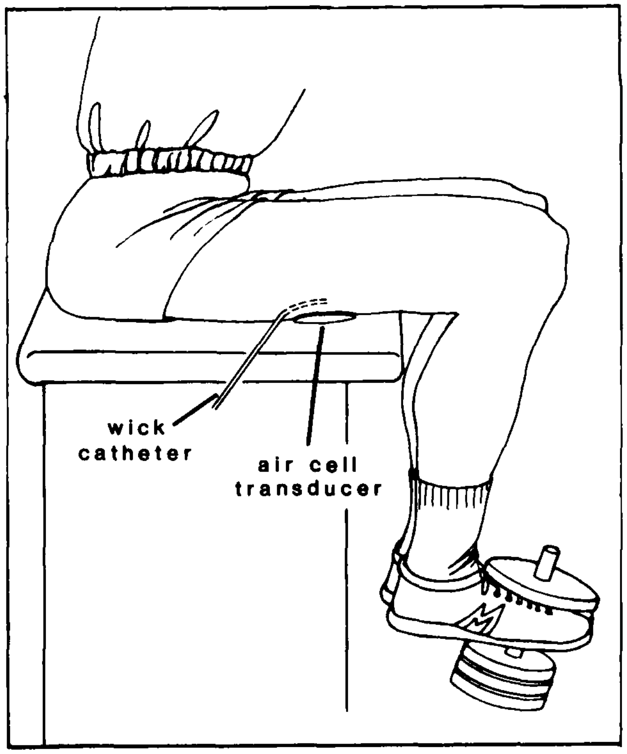

FIGURE 2
The experimental setup for comparison of interface and interstitial pressure measurements. Indentation of the soft tissue by the air cell transducer was minimal but is exaggerated here to show the location. Muscles were relaxed during measurements so dead weight loading on legs compressed thigh against table surface covered by a 25-mm-thick soft foam pad.

generate pressures underneath the thighs in the same range as those registered beneath the buttocks during sitting. The close correlation between the subcutaneous pressure measured with the wick catheter, and the pressure at the skin-pad interface as measured by the Scimedics Pressure Evaluator Pad, suggests that these devices can be *regarded as valid clinical measurement tools*. Even so, it must be recognized that these transducers reflect average rather than peak pressures within their measurement area (13), and that gels or other relatively stiff seating materials may tend to distort results.

SUMMARY

Two types of semiconductors/transducers and two types of pneumatic transducers were evaluated in vitro for use in clinical measurement of skin-cushion interface pressures. During bench testing in a two-layer system, all transducers gave readings considerably higher than the calculated nominal (applied) stress. The accuracy of transducer responses was dependent clearly on the properties of the interfacing materials and the relative sizes of the pads and transducers. In contrast, the readings from an air-cell type transducer beneath the thigh in human subjects appeared accurate in that it correlated well with subcutaneous interstitial fluid pressure as measured with a wick catheter.

This work draws further attention to the **potential** inaccuracies that can result from employment *of small, thin transducers to measure pressures at* the interface between materials. On the other hand, the study suggests that, with care, reasonable results can be obtained clinically owing to the favorable compliance of human tissue under low strains: the tissue acts to distribute the load evenly over the transducer.

While these tests with normal human subjects on one type of seating material were favorable, the bench tests drew attention to the system's high sensitivity to the mechanical properties and configurations of the *interfacing materials. For that* reason, interpretation of results of clinical pressure measurements continues to require considerable caution, particularly when comparing cushions of varying stiffness, when buttock tissues are thin or atrophied, and when clothing or other material intervenes at the interface ■

REFERENCES

1. Ferguson-Pell MW, Bell F, and Evans JH: Interface Pressure Sensors: Existing Devices, Their Suitability and Limitations. In Bedsore Mechanics (eds Kenedi RM, Cowden JM, and Scales JT), University Park Press, London, pp. 189–197, 1976.
2. Bader DL: Interface pressure measurement. CARE Science and Practice, 1:22–24, 1982.
3. Palmieri VR, Haelen GT, and Cochran GVB: A comparison of sitting pressures on wheelchair cushions, as measured by air cell transducers and miniature electronic pressure transducers. Bull. Prosth. Res., BPR 10-33, 17(1):5–8, Spring 1980.
4. Patterson RP and Fisher SV: The accuracy of electrical transducers for the measurement of pressure applied to the skin. IEEE Trans. Biomed. Engr., BME-26(8):450–456, 1979.
5. Cochran GVB and Palmieri V: Development of test methods for evaluation of wheelchair cushions. Bull. Prosth. Res., BPR 10-33, 17(1):9–30, Spring 1980.
6. Reddy NP, Patel H, Cochran GVB, and Brunski JB: Model experiments to study the stress distributions in seated buttock. J. Biomech, 15:493–504, 1982.
7. Gibson T, Barbenel JC and Evans EH: Biomechanical Concepts and Effects. In Bedsore Biomechanics, (eds Kenedi RM, Cowden J and Scales JT), University Park Press, London, 1976.
8. Hargens AR: An Introduction to Interstitial Fluid Pressure and Composition. Presented at the Tissue Fluid Pressure and Composition Symposium—A Satellite Meeting of II World Congress of Microcirculation, La Jolla, CA, July 19–21, 1979.
9. Snashall PD, Lucas L, Guz A, and Floyer MA: Measurement of interstitial fluid pressure by means of a cotton wick in man and animals: An analysis of the origin of the pressure. Clin. Sci. 41:35–53, 1971.
10. Mubarak SJ, Hargens AR, Owen CA, Garetto LP, and Akeson, WH: The wick catheter technique for measurement of intramuscular pressure. J. Bone & Joint Surg. 58:1016–1020, 1976.
11. Reddy NP, Palmieri V, and Cochran GVB: Subcutaneous interstitial fluid pressure during external loading. Amer. J. Physiology: Regulatory Integrative and Comparative Physiology, Vol. 240:R327–R329, 1981.
12. Reddy NP, Palmieri VR, Mayo-Smith W, and Cochran GVB: Effects of external pressure on subcutaneous interstitial fluid pressure. Federation Proceedings, Vol. 39, March 1980.
13. Ferguson-Pell MW, Reddy NP, Stewart SFC, Palmieri V, and Cochran GVB: Measurement of Physical Parameters at the Patient Support Interface. In Proc. Biomechanical Measurement in Orthopaedic Practice, Oxford, England, April 14–15, 1983 (in press).

SPECIAL ARTICLE

"Special Article" in the Journal of Rehabilitation R&D identifies material which addresses some matter of urgent or broad scientific concern to many of our readers. We believe that the example presented below is of importance not only to those involved in the development of sensory aids, but to all of those who are involved in the kind of problem-solving, "targeted" research that is so characteristic of the field served by this publication.

As in this case, the Journal's "Special Articles" will rarely if ever be found to follow the format of a standard scientific paper, but will invariably have been reviewed by appropriate members of the Editorial Board and by ad hoc reviewers selected for their experience and stature in the field and the relevant disciplines.

Evolution of Reading Machines for the Blind: Haskins Laboratories' Research as a Case History

FRANKLIN S. COOPER, Ph. D.
JANE H. GAITENBY, B.A. [a]
PATRICK W. NYE, Ph. D.

Haskins Laboratories
270 Crown Street
New Haven, CT 065116699

Reading machines for the blind are now an accomplished fact. They are not as good or as widely available as eventually they must be, but they are demonstrably useful. Not many years ago the construction of such machines was only a goal.

The main part of this account deals with work that was done by the Haskins Laboratories under research contracts funded by the Veterans Administration (VA). This research, which spanned two decades, played a significant role in achieving a better understanding and solution of the reading machine problem. However, the period of VA support is only the middle chapter of a longer story which begins at least 50 years earlier.

INTRODUCTION

The quest for a machine that can open the world of ordinary books to blind readers dates back to the 19th-century discovery that the electrical resistivity of selenium is influenced by light. Many technical applications followed that discovery, including at the turn of the century an apparatus for reading specially-prepared "photophonic books." But only now nearly 80 years later, do we have the first devices that may reasonably be called reading machines for the blind. They achieve that goal in the sense—and to the extent—that a blind user can himself read a variety of printed materials without unreasonable expenditures of time and effort; moreover, there is a reasonable expectation that reading machines will become affordable by individual users.

There have been many proposed solutions to the reading machine problem. Most have been abandoned, though some existing devices dating back to earlier efforts may continue to be used because they meet special needs and are comparatively affordable and transportable. Their major shortcomings are that reading is very slow and much training is required to learn the machine's "language." Nonetheless, it is usual to denote as reading machines all those devices that convert printed text into some kind of auditory or tactile signal, regardless of level of performance or requirements for special training. These devices deserve their name because they give the blind user independent access to personal papers and the like, even though they can offer only limited access to the larger world of books.

It is often useful, because of the difference in level of performance, to set apart the new generation of devices by calling them "high-performance" reading machines. Are they indeed high-performance devices and is the reading machine problem now solved? Or are the new devices only another plateau? The history of the field suggests a cautious answer despite major gains in speed and ease of reading. Indeed, the story of technologies of all kinds has the repeating theme of new approaches that lead to rapid attainment of a new plateau of performance, followed by steady but less dramatic gains attained by conventional refinement. It may be useful to characterize uneven progress of this kind as the normal technological cycle of revolution and evolution.

The potential for a revolutionary gain in reading speed, and for access to ordinary books, has been realized by two innovations: the use of optical character recognition (OCR) for input and synthetic speech for output. However, there has not yet been enough experience on routine tasks to establish the true usefulness of such machines to blind readers: Can the remaining faults be remedied by routine refinement or do the limitations lie deeper? Knowing the nature of the prob-

---

[a] Present address: Route 66, Huntington, MA 01050

lems and the reasons for past successes and failures provides a background against which the present achievements may be viewed in perspective.

We shall describe, as a case history, the work of one research group concerned with a single central aspect of the problem. There are advantages in the case history approach: experiments can be described in reasonable detail and in terms of the ideas that prompted them; also, in the present instance, there is freedom to concentrate on high-performance reading machines and to avoid the obligation a reviewer otherwise would feel to devote comparable attention to other types of machines (3, 9, 27, 28, 29, 42, 46, 47) that fill other kinds of needs.

This approach allows the evolution of the underlying ideas to be discussed from a coherent point of view, and so offers a potential gain in clarity, though at some risk of bias. However, tracing the evolution of ideas has a difficulty that is different from that of tracing the development of devices: An old idea, when replaced by a newer one, does not become merely a seldom used artifact, as devices do, but rather reverts to nonexistence—it becomes almost literally unthinkable. Similarly for reading machines. Now that they can talk, it hardly seems possible that this ability was not always the ultimate goal—that there was a time not so long ago when the very possibility of speech as an output signal was novel, or that somewhat earlier even the need for such a signal had not been realized.

It is against such a background of evolving concepts that today's reading machines should be seen, in order to appreciate their merits and assess their limitations.

HISTORICAL REVIEW

Research on reading machines at Haskins Laboratories began in the mid-1940s. A literature survey at that time turned up many attempts to use photoelectric devices as aids to the blind, and one complete development (the Optophone) that had been carried from inception and production to full evaluation. Earlier attempts to devise reading machines, such as the photophonic books (60) of V. de Turine, required specially prepared texts in which the letters were represented by small transparent squares. When the page was scanned by an opaque mask with apertures for the letters, a selenium cell and associated circuits responded to the transmitted light and produced an audible signal for each letter. The primary disadvantage of the system was the need for specially prepared materials, a limitation that also flawed other reading systems proposed during the following three decades.

THE OPTOPHONE

The Optophone had a profound effect on the development of reading machines. In its earliest form, this device was merely an aid to the blind in locating the light from doors and windows, and was called the Exploring Optophone. Invented in 1912 by Fournier d'Albe, it was soon modified to give information about the patterns of letters on the printed page. An early version of the Optophone was demonstrated to the British Association in 1913. In a public demonstration in 1917, a reading speed of three words per minute was attained. The original instrument had mechanical crudities that made it difficult to use and generated a continuous sound, even across the blank spaces between letters or words. Shortly after World War I, the firm of Barr and Stroud made many improvements in the device and converted it into a "black-reading" Optophone which generated sounds only from black areas of each letter (2). Manufacture of the device was undertaken, and in 1923 Miss Mary Jameson, an early and very apt student, gave a public demonstration in which brief passages were read at 60 words per minute.

The Optophone as engineered by Barr and Stroud embodies the best technical practice of its period. It is a precision instrument of about the same size and complexity as a portable sewing machine. The book to be read is placed face downward over a curved glass plate and a mechanical scanning mechanism. A line of type is scanned with five vertically arrayed points of light, as indicated in Figure 1. The beams of light are chopped by a rotating disc with perforations so spaced as to generate the musical notes G, C', D', E', G'. Individual notes or chords are heard only when the corresponding beams encounter black areas of a letter. Thus, the h in Figure 1 is shown generating the single note E', which was preceded by a four-note chord and is to be followed by the three-note chord C'D'E' and then by a silence preceding the next letter, i. Some of the chord sequences for individual letters are quite distinctive but others are much alike, as, for example, a, e, o, and c. It was not claimed by the makers of the Optophone that individual letters could always be readily recognized, but that "when the alphabet has been learned, the motif for each letter is recognized as a whole, and later in the reader's practice the more extended motifs for syllables and even words will become familiar to his ear."

There was substantial enthusiasm for the Optophone, particularly in England, as a result of Miss Jameson's performance, although her exceptional gifts enabled her to achieve reading rates far above those of other students. The principal difficulties appeared to involve ambiguities in the identification of the letters, especially when they occurred in rapid sequences. Even long training did not overcome this problem and did not, to any substantial degree, realize the expectation that recognition of larger patterns for syllables and words might replace letter-by-letter reading. Confusions were especially likely if the lines of type were not accurately aligned with the scanning mechanism, and correct alignment was not easily achieved in spite of ingenious mechanical arrangements. Interest in the device had substantially subsided by the end of the twenties, though Miss Jameson continued to use her personal Optophone for many years.

The Optophone was an achievement in the evolution of reading machines, and we should consider its lessons: If a reading machine for the blind is to be useful, it must use the same printed materials that sighted people read; and what is wanted is a machine that can be operated—and owned if possible—by the individual blind reader. The central problem was thought to be the technical one of generating distinctive sounds from the printed page. This was solved fairly adequately despite some ambiguities as to letter identities. Yet that solution was not useful to blind readers. The underlying reasons for this failure were not fully understood until long afterward.

BRAILLE, TALKING BOOKS AND VISAGRAPH

Meantime, practical aids to reading developed rapidly along other lines as well. In this country, the decade of the thirties saw the use of both Braille and the Talking Book become widespread (26). Technology and Federal funding were decisive factors in both cases. For Braille, an appropriation to provide books for the blind brought an end to the long and sometimes bitter disputes about what kind of embossed type or raised-dot code should be accepted as a standard. This was 100 years after Louis Braille had invented the system that bears his name. His basic system had won out over embossed type because it was easier to read, and over other dot systems because his could be produced by comparatively simple machines or even by a blind individual using a simple perforated guide.

The Talking Book lagged behind Edison's invention of the phonograph by half a century, and did not follow automatically even from the resurgence of that device in the twenties. The phonograph and its records in their commercial form were poorly adapted to the reading needs of the blind. In fact, it took a combination of events to make Talking Books a reality (34). In 1932, a grant from the Carnegie Corporation enabled the American Foundation for the Blind to develop suitable recording methods, reproducing machines, and mailing containers. Joint action by the Foundation and the Congress launched a library service for distributing Talking Book records and machines, many of the latter built under a W.P.A project. The service has been continued by the Library of Congress and fills an important need, especially of the older blind for whom Braille would be difficult to learn and not rewarding for pleasure reading.

The thirties saw another notable development carried through to a working device but abandoned because it failed to meet the real needs of blind users. The Naumburg Visagraph (45) used a cylindrical scanner-embosser to convert the black and white patterns of the printed page into enlarged raised replicas on a sheet of aluminum foil. In a series of tests, blind readers found the letters too difficult to comprehend with any ease. For this fundamental reason the Visagraph failed to become a viable reading aid, even though it had two significant advantages: books could be embossed on demand and it was as easy to reproduce diagrams, formulas, and the like as to copy letter-text.

By the nineteen-forties, Braille books and Talking Book recordings offered some partial access to the wealth of libraries. But the limitations were severe. Braille required

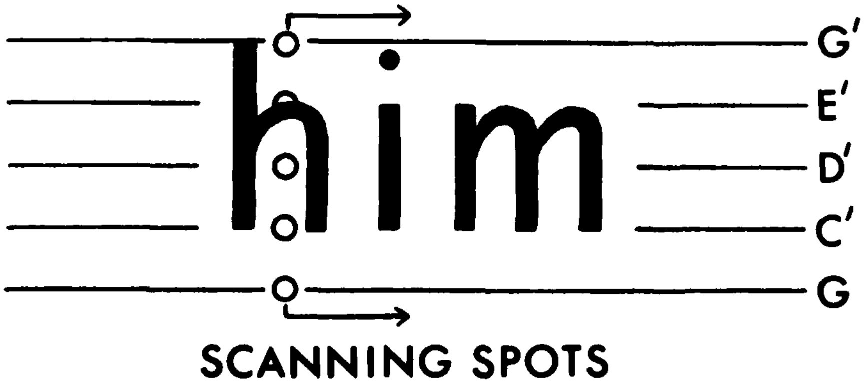

FIGURE 1
Tone generating method of the black-reading Optophone.

much learning and only the exceptionally skillful reader could match childhood rates of visual reading. Embossed books and recordings were both cumbersome and obtainable only from libraries. Worst of all, the selection of titles was severely limited because the total number of books in any category remained very modest. Ironically, the Optophone and the Visagraph—the two devices that might have provided unrestricted access to books—were already museum pieces.

HASKINS LABORATORIES' RESEARCH, PHASE ONE: WORK FOR THE COMMITTEE ON SENSORY DEVICES

The end of World War II brought changes of many kinds, including a new approach to aids for the blind. University research groups, organized and funded by the Office of Scientific Research and Development (OSRD), had been strikingly successful in applying science to the development of weapons and in expanding the technological base. With many blinded veterans returning from the war, Dr. Vannevar Bush sought to use his organization's prowess on their behalf. Guidance for the effort was put into the hands of a Committee on Sensory Devices (CSD) made up of physiologists, a psychologist, and physicist, under the chairmanship of Dr. George W. Corner. Meeting first in January 1944, the CSD chose to concentrate on guidance devices and reading machines, the two main needs of the blind to which the new technology might apply. It was evident quite soon that matching technologies to needs would be a novel undertaking in which the CSD would need facilities for working out preliminary developments. The Haskins Laboratories, a small nonprofit research institution, was placed under contract as a central laboratory to serve the CSD in exploratory research and in recommending industrial contractors for more extensive development tasks. Dr. Paul A. Zahl served the Laboratories as principal investigator and shared the direction of the research with Drs. Caryl P. Haskins, Franklin S. Cooper, and Alvin M. Liberman.

The charge to Haskins Laboratories was quite general and provided for a close working relationship with the CSD. The Laboratories' efforts were about equally divided between guidance devices and reading machines. Most of the guidance device developments were done by industrial contractors; evaluation of the devices with blind subjects was carried out by Haskins Laboratories. Research on reading machines was done almost entirely by Haskins Laboratories except for a parallel arrangement between the Committee and Dr. Vladimir Zworykin of the Radio Corporation of America (RCA) Laboratories. The CSD also undertook two additional developments: the improvement of optical magnifiers for persons of limited visual acuity, and improvements of the Visagraph, primarily for the production of enlarged embossed images of diagrams, prints, etc.

The entire program, from initial planning to final reporting, lasted less than 4 years—due primarily to shifts in government organization and patterns of funding, starting with the dismantling of the OSRD. However, there was a deeper reason as well, namely, a growing pessimism about early breakthroughs. Although, in each of its four lines of research, one or more devices had been brought to a first stage of practical trial, none of them had achieved striking success in meeting the needs of the blind.

A candid assessment of the CSD's accomplishments and a thoughtful analysis of the lessons learned from its work appear in a report written by its chairman (15). Commenting upon the CSD's emphasis on the early development of devices, Dr. Corner notes the sense of urgency (due partly to wartime conditions) that had to be seized before it waned, and also a prevalent belief in the potential usefulness of actual devices, however crude, in obtaining realistic responses from blind subjects. He adds, "Whatever may have been the wisdom of its course, the Committee therefore promoted more engineering and less psychology than it would have done if its activities had been paced at the peacetime rate and if the problems were in the field of pure science. One thing has surely been gained in this way of handling the program; it is the realization by physicists, engineers and mechanical inventors that when a machine is to act upon a man there are always going to be biological and psychological limitations that outweigh all the mechanical difficulties."

READING MACHINE RESEARCH AT HASKINS LABORATORIES

The program of research (9) for the Committee on Sensory Devices began early in 1944. The Laboratories' previous work had been on problems in the field of radiation biophysics and on the motion-sickness component of traumatic shock; also, in electro-optics as applied to densitometry and color photography. It was clear that the new work on aids for the blind would be concerned primarily with man-machine interactions. Indeed, the CSD had stressed the importance of approaching the problem from the point of view of the needs and psychological capabilities of potential users—in short, basic research rather than a gadget development program.

Analzying the Problem of the Optophone

It was necessary as a first step to recruit psychologists, to share in the work and then to attempt a careful analysis of the problem itself. A good starting point was to review the history of the Optophone. Why, in spite of careful engineering and intensive training of its users, had it failed to be useful? Did its faults lie mainly in the mechanism, or in the audible signals it generated, or possibly in the users' insufficient training? Both experimental work and pencil-and-paper analyses were undertaken. One of the original Optophones, borrowed from the museum collection of the American Foundation for

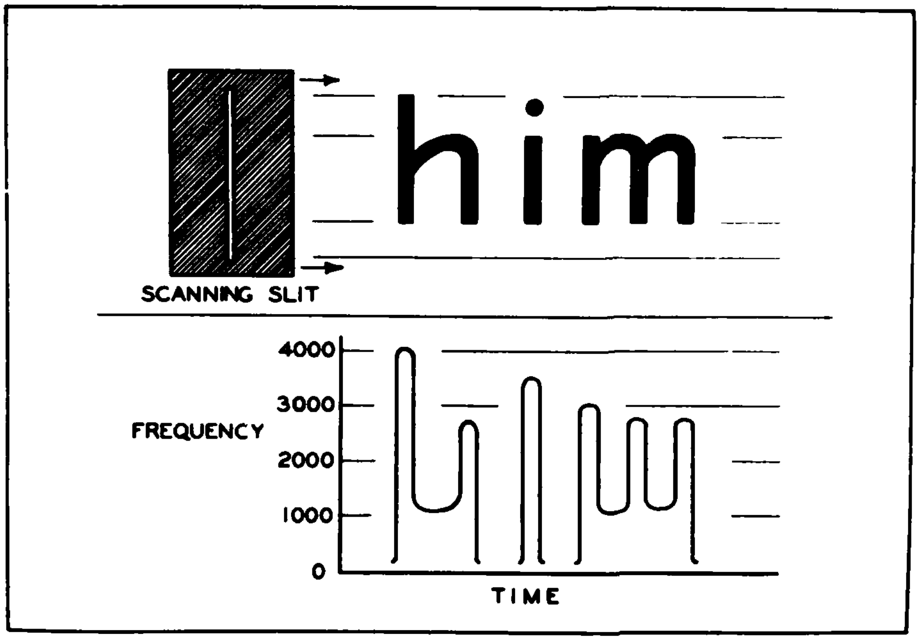

FIGURE 2
Tone generating method of the FM-SLIT reading machine (above), and frequency-time plot of its output (below).

the Blind, was put back into operating condition. Careful listening to its sounds confirmed old reports that, though the signals were reasonably distinctive, confusions often occurred among certain groups of letters. Perhaps the most striking impression was that one had been listening to a very substantial amount of text when, in fact, only a few words had been scanned. In a way this is not surprising because each letter generates three or four distinctively different chords when scanned slowly, as it must be if it is to be distinguished from other groups of chords that are only slightly different.

The sounds from the original Optophone were compared with recordings of a simulated Optophone made by Dr. Zworykin's group at RCA. For engineering convenience, the RCA device did not use a series of separate beams but rather a single spot of light that oscillated rapidly up and down across the letters as it moved slowly from left to right. The vertical sweep was synchronized with a frequency-modulated oscillator, so that tones of higher or lower frequencies were generated from the upper or lower parts of letters, just as in the Optophone. Thus, the signals from both instruments contained almost identical information about the black and white patterns of the letters—and yet the audible effect was very different. The RCA simulation had a harsh buzz (at the vertical sweep rate) that dominated the signal and gave the impression that identifying the letters would be even more difficult than with the musical tones from the Optophone.

A third comparison was made with a device—simulated in the early tests—that looked at the letters through a narrow vertical slit and used the total amount of black thus seen to control the frequency of a tone. This tone could vary between 100 Hz and 4000 Hz or drop to silence between letters and words. Figure 2 shows the scanning method and resulting signal for this FM-SLIT device. The output seemed to have about the same complexity as that of the Optophone and to share the characteristic that some letters had distinctive sounds whereas other groups of letters were ambiguous.

Inherent Limits on Speed of Reading. But was confusability the principal problem? If so it might be possible, with sufficient ingenuity, to generate distinctive sounds even from letters that were visually similar. Another possibility, though, was that a different kind of limitation would prove to be decisive. Pencil-and-paper analyses suggested that the rates at which letter sounds could be followed by a listener would be seriously limited, regardless of how distinctive the individual sounds might be.

It is well known that clicks or other brief sounds are heard as separate events when the repetition rate is low. As the rate increases, the character of the sound changes first to a buzz (at about 20 sounds per second) and then to a tone of rising pitch. Even if the brief sounds are not identical, they can hardly retain their individual character without merging into a buzz as the rate increases. With the Optophone, there are on average about three different chords per letter, which means that about five or six letters per second (one average English word per second) would be an absolute upper limit on letter-by-letter reading. One can readily be convinced that the 60-word-per-minute rate is unacceptably slow, simply by reading aloud at one word per second. The actual performance of any such device would be far below that rate even after much training, as may be inferred from long experience with International Morse Code. That code provides an almost perfect parallel, since each letter is represented, on the average, by about three dots or dashes per letter. This leads again to an estimate of about 60 words per minute as an upper limit, which is consistent with existing world records for code reception. As for the effects of long training, even expert operators of commercial radio stations send and receive at only 30 to 40 words per minute.

Thus, both theory and broad experience with International Morse Code suggest that even the best of letter-reading devices will be limited to 20 words per minute or so for the average reader—hardly a tenth of the rate at which sighted people read.

Early Experimentation

That was a discouraging prognosis, but even so there were reasons why it seemed desirable to explore letter-reading devices with some thoroughness. One was that any reading, even at limited rates, was better than none at all, and especially if a device could be simple and cheap enough to give the blind person independence in reading personal correspondence, sorting papers, and the like; besides, there was no obvious alternative to devices that operated on a letter-by-letter basis. A second reason was the hope, not entirely disproved by Morse Code, that the signals for letters would somehow coalesce into word-size units, just as the developers of the Optophone had hoped that its signals might be heard as words after sufficient practice. The ways in which sounds can combine to give auditory patterns had been little investigated and so it seemed premature to conclude that no combination of sounds could possibly be found that would meet this requirement.

Constructing and Simulating Various Devices. The experimental approach was accordingly aimed at trying out as many kinds of reading machine signals as one could reasonably devise. For practical reasons, the machines had to be simulated; also a reasonably simple standard listening test had to be devised.

This was done by developing a screening test that contained eight common four-letter words, and a device by which the signals corresponding to these words could be produced without building a working model of each machine. The simulation technique made use of a general-purpose scanning device, with specialized signal generating circuits for each new kind of reading machine. Disk and sound-on-film recordings were made to serve as test materials for psychological evaluation. The scanning device was a 16-mm movie projector, modified to move the film slowly and continuously past the film gate. The letter text, photographed onto the film along its length, could then be projected so as to move slowly across a scanning aperture behind which were eight lenses, photocells, and audio-generating circuits. It was then quite simple to "try out" any kind of Optophone that had eight or fewer scanning beams. Other kinds of reading devices could be simulated by combining the photocell signals in various ways.

The signals characteristic of a number of different letter-reading machines were simulated by these means. Initial tests of the size and orientation of the scanning aperture seemed to show that a rather narrow slit worked best, although some machines were tried in which the slit was divided into sectors. For a single slit (with all eight photocells connected together), the audible signals were modulated in a variety of ways. For example, amplitude-modulated signals of a fixed frequency proved to be very monotonous and not distinctive. Frequency modulation of different wave shapes (sawtooth, square, and sine waves) showed that sine waves gave the least disagreeable sounds. For frequency-modulated tones, the best results were with a frequency swing from 100 to 4,000 Hz, with larger steps at the high-frequency end of the scale. A system of this kind, referred to as the FM-SLIT system, was tried extensively in later tests and was the basis of a portable machine built by the RCA Laboratories.

Attempts were made to "enrich" the signal, for example, by allowing the upper half and lower half of a letter to modulate separate signals, or by generating hisses and clicks from the risers and descenders of such letters as b and p. Some of these modifications seemed to add to the distinctiveness of the signals, but they always increased the perceived complexity.

Assessing Performance. Comparative tests were run on the more promising simulations. A limited set of words (eight of the four-letter words which occur most frequently in English) were recorded in a rote learning format, and the rate at which they could be learned when presented in various random orders was determined. Some kind of comparison signal was needed; it seemed obvious that speech could be taken as the upper bound on expected performance but that actual spoken words would be altogether too easy. So a synthetic language (which came to be known as Wuhzi) was devised. It was based on a transliteration of written English which preserved the phonetic patterns of words and so made the new language pronounceable. The results of these comparative tests are shown in Figure 3 for eight simulated machines and for Wuhzi. Clearly Wuhzi was best; it was learned rapidly and gave near-perfect scores within the first 15 to 20 trials. The Optophone and FM-SLIT machine (which were given further extensive tests) performed less well. All the other machines were distinctly inferior to these two, though in some cases this was contrary to one's intuitive impressions about the signals. Also, for the RCA machine, performance would probably have been more nearly comparable with the Optophone and FM-SLIT machines if the available test recordings had been from the device in its final form. The screening tests also allowed comparisons at different reading speeds (50, 100, and 150 words per minute) as shown in Figure 4. Difficulty in learning increased rapidly with reading rate, but the quantitative data are probably not reliable because extraneous factors may well have been serving as cues, since the number of words was so limited.

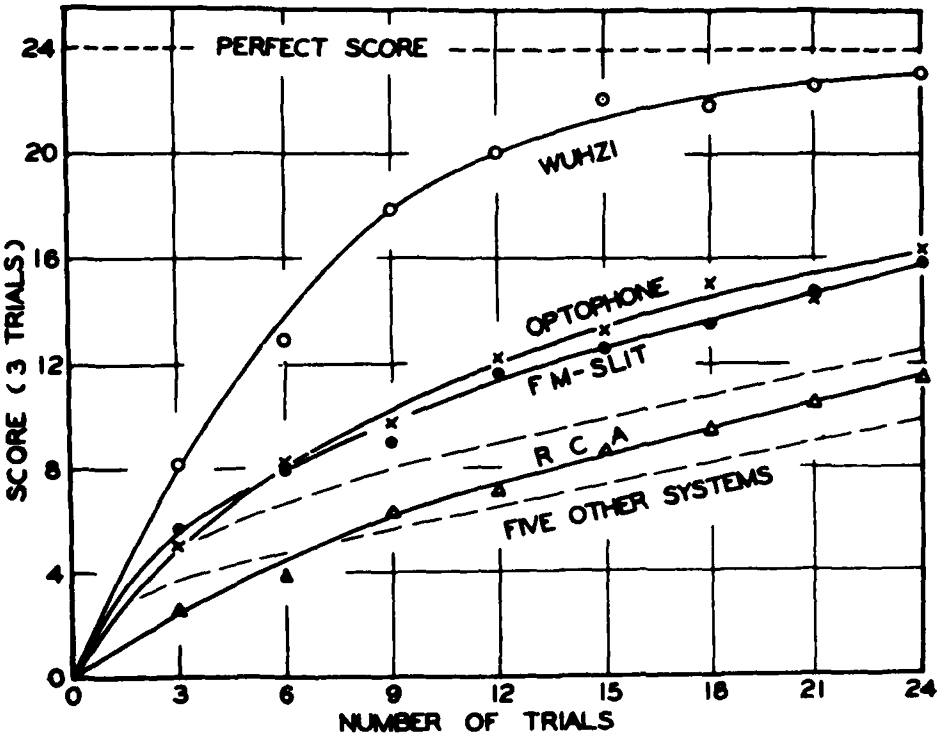

FIGURE 3
Performance on comparative test of various (simulated) reading machines.

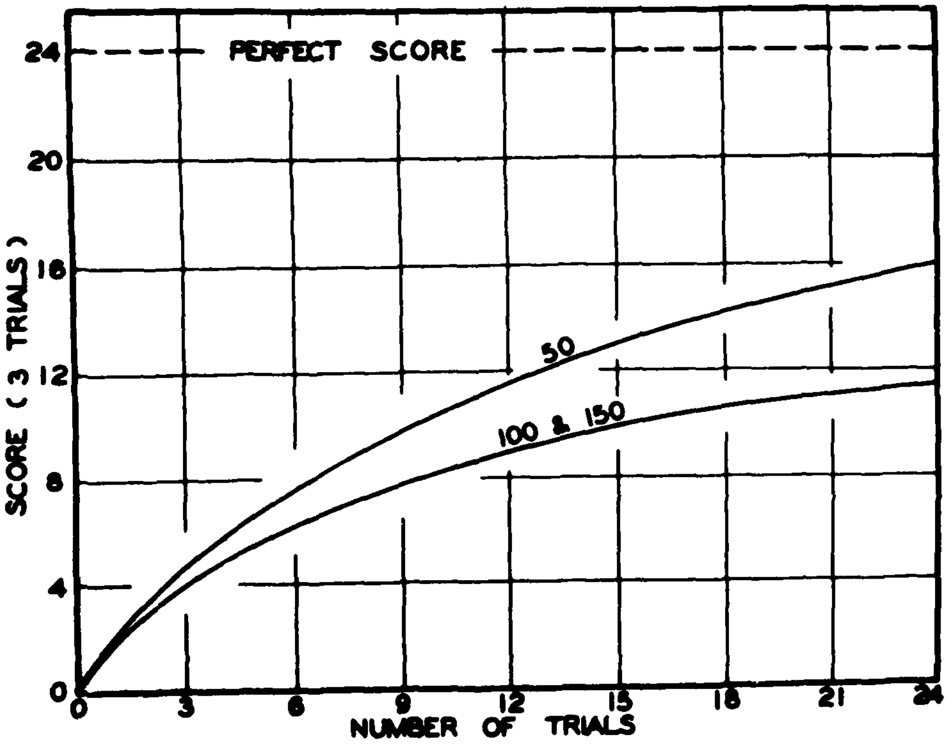

FIGURE 4
Performance versus presentation rate (50, 100, and 150 words per minute) for FM-SLIT reading system.

The screening tests were supplemented by semiproficiency tests for several of the machines and by extended training on a working model of the FM-SLIT machine. The semiproficiency tests used recordings of simple sentences made up from a vocabulary of about 50 common words. The objective was to allow each subject to attain an intermediate degree of proficiency over a period of 6 to 10 hours practice. The extended training tests of the FM-SLIT system were aimed at finding out how proficient a subject could become after long practice with an actual device.

The subject was seated before a table and used a hand-held device, with or without mechanical guides, to scan enlarged film images of letters and of sentences from 4th and 5th grade school books. Learning was slow and the average reading rate attained at the end of a 90-hour training period was 4.2 words per minute, with no significant gain in reading speed during the second half of the period. Analyses of the mistakes indicated that difficulty in the unambiguous identification of individual letters was a factor in limiting the reading speed; that is to say, subjects used much time in repeatedly rescanning some of the letters and words.

A single value for reading rates can be misleading unless test conditions are fully specified; moreover, since conditions are rarely the same for tests done in different laboratories, comparative reading rates are not very informative. Even within a given test format, there can be wide variability in reading rate due to fortuitous combinations of initial letters and context. Thus, in the proficiency test described above, an examination of the reading rates for successive single lines of connected text showed that occasional lines are read at speeds well above the average, though still slow by ordinary standards. The most probable rate, however, was in the range of 2–4 words per minute. Moreover, there was little gain in reading speed betwen the first half of the training period and the latter half. This is one basis for the conclusion that a plateau in reading speed had been reached.

The parallel work by RCA Laboratories gave results that were only a little more encouraging. Tests with the Type A machine (based on the Optophone) used three blind subjects, although only one was carried to saturation in reading speed (at about 190 hours). The attained level for this one subject was approximately 20 words per minute. Letter recognition with random presentation tended to level off at about 80 percent after 40 to 50 hours of practice. This same device, and one similar to the Haskins Laboratories FM-SLIT system, were tested independently at the Naval Medical Research Institute using test materials that were recorded on discs in a learning format and presented at a steady rate of about 12 words per minute, so reading rate was not a variable. Of five subjects, the best attained a score of 60 percent accuracy at the end of 10 days; average scores for the other four subjects were much lower.

The general conclusion from all these tests does not differ from historical results with the Optophone and experience with International Morse Code: The speeds attainable with devices of this general class are too low to be generally useful for continuous reading, though they might be acceptable for certain restricted tasks.

Reanalyzing the Problem

While these efforts were underway to improve performance from simple letter-by-letter reading machines, an increasing part of the Laboratories' attention was given to further analysis of the problem and to more sophisticated approaches. An attempt was made to examine and classify the various ways in which a reading machine might operate. Both the principle on which the mechanism might work, and the nature of the sounds that might be produced, were considered. The resulting classifications are different enough so that it is useful to consider both in parallel.

As to sounds, it has been mentioned above that enriching each letter's output with enough features to be distinctive to the ear is almost sure to prolong each word; at higher rates it will cause words to mix into an indistinguishable buzz. And yet spoken words evade this limitation. How can this be? The answer might be that there are typically only three or four distinctive sounds (phones) per word (rather than per letter) and that these sounds merge smoothly into one another to give a unitary impression of the entire word. A desirable goal, then, would be a word-reading device, one that would generate a "speechlike" output. Just what is meant by "speechlike" in this context is a topic to which we shall return after a look at how mechanisms might be classified.

The assumption implicit in all of the mechanisms described thus far is that the optical shape of the printed letter will be translated directly into an acoustic shape for recognition by the ear. Might it not be possible to use the shapes of printed words in much the same way, to build a word-reading machine? Some kind of optical or electrical integration across the letter elements of the word would be needed, but the integrated information could generate sounds for the word that vary less rapidly than the letter rate. On the above bases, we classified all machines that operate on the shapes of letters or words as direct translation machines and divided the group into non-integrating (letter-by-letter) and integrating (word-reading) machines.

Since letters have identities as well as shapes, there was the possibility in principle—though not then in practice—that letter identities might be recognized, in which case there would be much greater freedom in assigning sounds to them than when the letter shape per se must be translated into sound. Such machines were classified as recognition-type machines. The letter identities could, by direct keying, generate sounds which might be the letter name or the sound usually given to it in "sounding out" words. Another possibility would be to accumulate the letters for an entire word and use programmed keying to generate a distinctive unitary sound for the entire word. Technologically, all of this seemed very far in the future, but we gave much thought to the kind of sounds that might be generated and how useful they might be. In fact, the development of the synthetic language Wuhzi was intended, in part, to demonstrate that if words of an arbitrary kind could be pronounced, then they could be learned as a new language—in one sense, a dialect of English, inasmuch as meanings and syntax are preserved, though sound similarities are not. Moreover, programmed keying with sounds that bore some resemblance to usual letter sounds might indeed make this dialect recognizable as English, even though many words would have bizarre pronunciations because of spelling-to-sound disparities.

Experimental Approaches

Several kinds of experimental work were undertaken to explore these more exotic types of reading machines: (i) two direct-translation, integrating types of word machines were built at the Laboratories and preliminary tests of them were made; (ii) RCA Laboratories was encouraged to undertake development of a recognition-type spelling machine; (iii) simulation studies were started to find out whether letter sounds might serve as a replacement for letter names (spelling); (iv) and a program of basic studies was begun to find out just what acoustic characteristics would make a sound truly "speechlike."

Word-type Machines. Neither of the two integrating-type direct-translation devices showed much promise. One, dubbed the Vowel Generator, produced a signal by mechanically chopping the image of several successive letters along the line of type, with major emphasis on the letter just coming into view. The signals were vowel-like in character and changed smoothly and continuously across the complete word, but they were completely lacking in consonant character and seemed rather indistinct. In a second machine, we attempted to correct this difficulty by generating signals of a consonant-vowel-consonant character for each four letters of the word (or less, at the end of the word). The change of sound character was to be determined by a cyclic switching operation, triggered by successive letters and interword spaces. The signals, as simulated, indicated that such a machine would have the fatal defect that the mechanical rhythm would dominate all other aspects of the signal, and so no further work was done on this device.

The RCA Recognition Machine, built as a bench model, utilized a scanning operation similar to that in the RCA version of the Optophone. However, the photoelectric signal served as input to a function matrix where it was matched against scanning patterns for the different letters of the alphabet. A match between input and matrix identified the letter, and this actuated one of a set of very brief tape recordings to sound out that letter's name. This experimental model was completed at the very end of the CSD program, so test results were meager. Recognition of letters was reasonably successful and successive letters in a line of type could be scanned and identified at a maximum rate of 48 to 60 words per minute, set by the magnetic tape announcing system. There were some difficulties with ambiguities between letters, and in maintaining alignment between type and scanning head. Also, when the letter sounds were recorded at speeds of 50 words a minute or so, the letters sounded as though they had been clipped, and since all letter sounds were equally long, the rhythm pattern was very pronounced. Overall, the development demonstrated feasibility for a letter-recognition approach and confirmed the expectation that reading rates could be improved somewhat over direct translation methods, though probably not beyond 50 to 60 words per minute.

It seemed reasonable to expect that a substitution of letter sounds for spelling (in which the names of the letters are themselves complete syllables) would have advantages as the acoustic output for a recognition reading machine. The sounds, of course, would have to merge smoothly into each other and yet be distinct enough to identify the letters. Could a blending of this kind be achieved?

Phonetic Summation. We undertook to answer that question by recording the letter sounds and reassembling them in new combinations for new sentences. The simplest, but most effective, of the experimental methods was to splice together short pieces of sound-on-film recordings to form the new sentences. For technical reasons, this had to be done by cutting the sound segments from one piece of film, assembling them end to end in a long narrow printing box, and then making a contact print for playback on a 16-mm film phonograph. (Today, with magnetic tape, or computers, the technical problems would be far simpler.) The primary difficulty, though, was not a technical one. It was one of isolating that part of a sound recording (made from spoken words or sentences) that represented the individual letter sounds. Another problem was that the sound segments all had to be of the same duration if they were to be used by a mechanism such as the RCA Recognition Machine, whereas the actual sounds of speech differ widely in duration.

The experimental result was quite clear: sentences generated in this way were unintelligible. The letter sounds were difficult to identify unambiguously, they did not blend, and the rhythmic pattern (due to equal durations) was a dominant feature. The possibility that the poor result was due to faulty splicing was excluded by cutting apart a recorded sentence, and then resplicing it. The reconstituted sentence was entirely intelligible and hardly distinguishable from the original recording. The failure of our one attempt at "phonetic summation" did not, of course, prove that speech sounds could not be combined into a speechlike stream, but it did suggest that this might prove difficult to achieve.

The core of the difficulty was that very little was known about the nature of speech sounds—about the acoustic parameters that cause a sound to be "speechlike." Certainly not enough was known to serve as a guide in devising an output for a reading machine, even one sophisticated and costly enough to provide letter identifications as a basis for generating the sounds. A program of research was undertaken in the final year of our work for the Committee to study speech sounds from this point of view. That work will be discussed in a following section since it was central to the next phase of the Laboratories' research program.

LESSONS FROM THE CSD PROGRAM

When Haskins Laboratories' program of research on reading machines under CSD sponsorship began in mid-1944, it was oriented toward basic research on human factors in reading by ear. Just 3 years later, all of the research other than report writing came to an end, primarily because there was little prospect of achieving a practical working device or technological breakthrough within the next year or so.

In what sense, if at all, do the 3 years (1944–1947) of research represent a plateau in the evolution of reading machines? It is true that none of the devices—either the models built at the Laboratories or the fully engineered ones built by RCA—have survived except in museum collections, but it may be reasonable to claim that a deeper understanding of the problems was attained and a clear direction set for future research. As compared with the development of the Optophone 20 years earlier, the underlying problem was seen in a different way. For the Optophone, the problem had been seen as the technical requirement that print be converted into sound; in the CSD program, the objective was to match sounds from reasonably simple devices to the needs and capabilities of blind listeners. By the end of the CSD program it was clear that some kinds of sounds were inherently unsuitable, and that the reasons for this went beyond those that had been considered limiting for the Optophone. Moreover, it had become evident that the only kinds of sounds for which high performance could be expected would be sounds that were speechlike. Just how such sounds could be generated, and the complexity of the mechanisms needed to make them, were not well understood; but the direction in which a solution might be sought had been indicated.

The following paragraph from our report to the CSD (8) in mid-1947 makes clear the extent, and the limitations, of the understanding we then had about the overall problem: "One of the principal conclusions to be drawn from the work done thus far is that a successful reading machine must present its information in word-like units, not letter-by-letter. The development of machines which will do this requires prior knowledge of the physical characteristics of sound patterns which give a unitary impression. Spoken languages are made up of such units and, accordingly, a device which can yield speechlike sounds would appear to have a good chance of success. Moreover, recognition-type machines are inherently capable of generating a dialect which should resemble spoken English to a degree. It is clear that the ultimate success of the entire reading machine program (i.e., the development of either a recognition or an integrating type of translation machine) depends on basic information about the physical characteristics of speech-like sounds."

From what we now know about reading machines that paragraph appears both prophetic and quaint. No one now quarrels with the idea that a high-performance reading machine needs to be based on knowledge about speech, or that its output cannot be presented on a letter-by-letter basis. But nowhere in the paragraph does it appear that spoken English itself was envisaged as a reasonable objective for reading machine development. The most that could be foreseen, given the limitations imposed by the knowledge and technology of the time, was that it might be possible for a machine to recognize letter identities, and if it did, to convert the letters into phonetic equivalents that would "sound out" the words in an English-like dialect, though only if a way —not then evident—could be found to make the sounds merge together in a speechlike manner. Even such a machine would have pushed the knowledge and technology of the time to their limits.

PHASE TWO: RESEARCH ON SPEECH SYNTHESIS

For nearly 10 years, the research at Haskins Laboratories turned away from a direct concern with reading machines to more basic studies of speech and speech-like sounds. However, these studies eventually led back to the reading machine problem, and participation in the VA research program. Consequently, some account of the intervening events is appropriate here.

WHY IS SPEECH SO FAST AND EASY?

The principal thing that changed over the intervening decade was the nature of the problem. Increasingly, during the latter part of the CSD program, it was asked: Why did speech sounds serve so well as an acoustic signalling system? Speech was far better and faster than the best arbitrary sound codes that could be devised. Moreover, the limitations observed were able to be rationalized. Why did they not apply to speech? Could long experience and the use of word-size units make that much difference? Or did the sounds of speech match the ear's perceptual capabilities in some special and especially efficient way? So long as reading machines were the focal problem, the efficiency of speech was simply a well-known fact that could serve as a yardstick for other signals and proof that easy, speedy reception was possible.

The termination of the CSD program, followed by modest but long-term support from the Carnegie Corporation, left Haskins Laboratories free to concentrate on speech itself—on how something so complex acoustically could be perceived so easily and so fast. The physical complexity of speech had just become fully evident in the sound spectrograms published in 1946–47 by the Bell Telephone Laboratories (BTL) (52,53). But complexity was not all. One might have expected to see distinctive patterns corresponding to what were, to the ear, highly distinctive sounds. There were patterns in the spectrogram, to be sure, but they lacked obvious correspondences: They were different for the same word when spoken in different contexts or by different speakers; moreover, there was not a sequence of separable patterns corresponding to the sequence of obviously disjunct sounds. The real puzzle—given such seemingly muddy signals—was how speech could be perceived at all!

EXPERIMENTS ON SPEECH

The experimental approach taken was to use spectrograms as if they were recordings, intended to be played back to a listener, but with one difference: Changes could be made in the patterns before they were turned back into sound. By listening to the effects of such changes, it could be found what parts of a pattern were important in identifying the sounds of speech. The great advantage of spectrograms for such an analysis-synthesis strategy was that the information was laid out in conceptually manageable patterns. The disadvantages were that complex instrumentation was needed and had to be built—first a spectrograph to yield patterns to be worked on, and then a playback device for listening to the patterns, before and after modification.

Sound Spectrograph. The construction of a spectrograph and of a Pattern Playback was started in the final year of the CSD program as a way to discover just what acoustic characteristics of speech would make it "speechlike" and therefore likely to be useful in a reading machine. The principal reason for building a spectrograph was that the BTL model was simply not available, and not likely to be so for several years. Another reason was that it had a very limited dynamic range, adequate for visual inspection but not for playback with even moderate fidelity. It was supposed, from what was known about the effects of amplitude distortion, that a dynamic range of 30–40 db would be desirable; also, a spectrographic transparency was needed for use in the playback device. All of this meant a complete redesign of nearly every component of the BTL spectrograph. By the end of the CSD reading machine program, spectrograms on film had been made that were more or less comparable with the BTL spectrograms.

During the next few years, the spectrograph was reworked several times (10). The initial use of acetate discs for recording the sample to be analyzed (with 1.8 seconds of speech recorded on a single re-entrant groove) gave way to 12-second recordings on magnetic tape. This allowed three average sentences per spectrogram on film 7 inches wide by 7.2 feet long. The combination of a variable-intensity cathode-ray tube as light source, and a Photoformer[b] to linearize tube and film characteristics, allowed recording as spectrograms the (preemphasized) spectral intensities linearly as optical densities over a 36-db range. It was later thought to be a poor reward for the effort involved that this turned out to be far more precision and range than was required and, even more ironic, that the direct use of film spectrograms for playback was not the best way to experiment on speech.

Pattern Playback. The development of a playback device for spectrographic patterns also went through several stages. In that case, though, the care and refinements that went into the final instrument paid solid dividends and, in fact, the Pattern Playback is still used occasionally.

The initial design, of which a "quickie" variant was built in the final days of the CSD program, used both the spectrogram on film and a set of sound tracks on film to modulate a beam of light. The spectrogram allowed light to pass where there had been energy in the speech spectrum at a particular moment; then, this light was again modulated at audio frequencies corresponding to the spectrogram. A photocell collected and mixed the various components to give a composite audio output. The sine-wave modulations were recorded onto a rectangular sheet of film as a sequence of sine-wave soundtracks, stacked vertically in order of increasing frequency. This was wrapped around a transparent cylinder that also carried the spectrographic transparency. Thus, rotation of the cylinder past an illuminated slit served both to scan the spectrogram and to generate the sine-wave modulations of the light that was then transmitted to a phototube.

There was nothing wrong with this arrangement in principle, but it had very serious practical flaws. Not nearly enough light came through the two films to give usable audio signals; in fact, the signal-to-noise ratio was so bad that almost nothing could be heard except noise.

In a second version, a number of changes and improvements were made (6,11). To improve the signal-to-noise ratio, a powerful mercury arc was used as a light source and a multiplier phototube was used as the pickup device. The two optical modulations were separated by a lens system. Audio frequencies comprising all the harmonics of 120 Hz up to 6000 Hz, were generated by a large tone wheel driven at 1800 rpm. Speech-rate modulations were provided by a spectrogram made into a belt and scanned at its own time scale of 7.2 inches per second. A number of detailed refinements were introduced, such as linearization of the tone wheel modulator by predistorting the sine-waves used to record it; also, elimination of the buzz from residual modulated light by a cancellation circuit. A further feature that proved to be very important was that the spectrogram (used as a transmission modulator) could be replaced by a reflection modulator. This was a clear acetate belt on which patterns could be copied in white paint from the spectrogram; likewise, freehand patterns of any kind could be converted into sound, just as if they were spectrograms.

INITIAL EXPERIMENTS WITH SPECTROGRAPH AND PLAYBACK

The spectrograph was in operation well before the Playback was completed, and a number of spectrograms had been made of a list of sentences (the so called Harvard sentences), that were designed for testing the intelligibility of speech in noise. The first question to be asked, once the Playback was ready to operate, was the very elementary one: Would it talk at all, and if so, how intelligibly? Theoretically, there was every reason to suppose that if one resupplied the approximate frequencies indicated on a spectrogram, then the resulting sound would be very much like speech and ought, therefore, to be intelligible. To be sure, the reinserted frequencies did

---

[b] Photoformer: A device that employs a cathode-ray oscillograph and negative feedback from a phototube to generate an output voltage that is an arbitrary function of the input voltage. The function is given by the shape of a partial mask on the cathode-ray tube.

not match exactly those from the real speech, but rather were a substitute set drawn from the first 50 harmonics of a fundamental frequency of 120 Hz. The pitch of the synthetic speech would, therefore, be strictly monotone regardless of how the sentence had been spoken, but the spectral variations ought to be about right. In fact, the Playback did talk very well when it was given transmission versions of the Harvard sentences. The speech quality was poor—rather noisy and a little rough—but there seemed little question about intelligibility. Formal tests with naive listeners (11) gave scores of about 95 percent. Some preliminary experiments with overlays that blocked out parts of the spectrographic patterns were not very instructive, partly because the speech quality was then so poor and partly because the effects on intelligibility were difficult to estimate.

Some of the difficulties seemed inherent in transmission spectrograms so the alternate mode was used—one in which the Playback could work by reflection from patterns painted in white on a clear acetate belt. It was found unnecessary to copy the spectrographic patterns in detail; all that was really necessary was to preserve the features which were visually most prominent and then, largely on a trial-and-error basis, to make further changes that improved intelligibility. Paintings of the same 20 sentences prepared in this way gave intelligibility scores of about 85 percent. This was not quite as good as for the original transmission spectrograms, but the voice quality was better—even quite acceptable—and one could tell almost immediately by ear whether a particular change in the painted pattern gave a gain or loss in intelligibility.

SEARCH FOR THE ACOUSTIC CUES

It was at this point, in the early nineteen-fifties, that serious research on the nature of speech and its perception could begin. Our colleagues, Pierre Delattre and Alvin Liberman, carried through a series of studies that provided a solid experimental basis for the new field of acoustic phonetics (12,16,39).

What they set out to do was to find the acoustic cues —those parts of the spectrographic pattern that were principally responsible for a listener's judgment that he had heard one particular speech sound rather than another. They did this by working with syllables rather than sentences and by using sets of syllables that represented phonetic classes of sounds, e.g., the voiceless stops, or nasals, or fricatives. Then they varied the patterns, one aspect at a time, and asked naive listeners to identify the resulting sounds. In this way, after several years and many thousands of patterns, they were able to find the two or three principal acoustic cues for each of the consonants and vowels of English.

Only a beginning had been made on this task by the summer of 1956 when the research was reported at a conference on reading machines that was organized by the VA, and (somewhat later that year) when discussions began on the research that Haskins Laboratories might do for the VA. Before turning to an account of those events, it may be useful to relate the Laboratories' work to the research on speech that was underway elsewhere, and then to give a few examples of our research findings about the nature of speech (40).

There was, in the late forties and early fifties, an upsurge of interest in experimental work on speech. Much of it had been sparked by Homer Dudley's Vocoder (18,20) and Voder (19), the wartime development of the sound spectrograph, and Martin Joos' insightful little book on "Acoustic Phonetics" (35). These developments and the Laboratories' own demonstration of speech synthesized from simplified spectrograms, led in late 1949 to the first of a series of four speech conferences at MIT. Indeed, in 1955 and 1956, there were speech conferences at San Diego and Christchurch, England, as well as at MIT. By about this time, several groups had developed speech synthesizers of various kinds, some of which could generate quite natural-sounding speech [c]. One of the highlights of the meeting at MIT in the summer of 1956 was an on-stage conversation between Walter Lawrence's Parametric Artificial Talker (38) and Gunnar Fant's Orator Verbis Electris (22). Each repeated its demonstration sentence with an amusing array of pitch modulations.

The work at Haskins Laboratories on the acoustic cues with the Pattern Playback was making rapid progress by the summer of 1956. It was by then well-known, from visual studies of spectrograms, that the consonants and vowels so clearly heard in speech were not at all evident to the eye; in particular, the temporal stretches that were heard as vowels did not usually show the steady-state "characteristic tones" attributed to them in the twenties and thirties. Also, the consonant stretches seemed to evade simple characterization; they were often heard just where the spectrographic patterns were weak or changing rapidly and also in different ways in different contexts. But if one painted a copy of only the most prominent features of the real spectrographic pattern—essentially, a cartoon version—the Pattern Playback would "speak" it almost as clearly as if all the rest of the pattern were present.

---

[c] These synthesizers used resonant circuits to generate the formants and so could mimic the pitch changes characteristic of human speech, thereby adding an important dimension of naturalness. As the early versions of PAT (38), DAVO (55), and OVE (23,24,25) evolved in the late nineteen-fifties and early sixties, some read their control parameters from plastic tapes, much as spectrograms were read with the Pattern Playback and our own pitch-controllable Vocoder Playback (Voback) (7). As it turned out, improvements in naturalness made little contribution to the search for the cues.

So the first important finding was that intelligibility was carried by an underlying simple pattern, which meant that the speech signal could be drastically simplified with little or no loss. But this only sharpened the question about where the consonants and vowels were, or rather, how to characterize them. Were the rapid up-and-down excursions of the formants[d] merely connecting links between the "real" consonants and vowels? Or, did these transitions (as they had come to be called) themselves carry important information?

Some of the earliest experiments at Haskins Laboratories were with syllables such as ba, da, and ga that showed these transitions to a marked degree. The Laboratories had already confirmed that the vowels could be represented (to the ear) by two or three steady-state formants and that the vowels differed one from another only in their formant frequencies. So all kinds of formant transitions were painted onto the beginnings of the first and second formant pattern for, say, the vowel a. When the sounds from these patterns were played (in randomized order) to naive listeners, they had no trouble in labeling them as ba, or da, or ga. Their responses indicated two things: not only which transitions corresponded to each of the three consonants, but also that the transitions did indeed carry much information.

Experiments of the same kind with other vowels gave comparable results (Fig. 5), except that each vowel had its own preferred set of transitions for b, d, and g. However, comparisons across vowels revealed a rather simple principle from which the various transition patterns could be derived (Fig. 6): The second formant for each of the three consonants seemed to arise from its own "locus" frequency and then—except for an initial brief interval of silence—to move briskly to the vowel's second-formant frequency, whatever that might be; and, for all three consonants, the first formant started from a very low frequency (16).

In comparable experiments, it was found that the systematic changes, mainly at the start of the first formant, would produce the voiceless stops, p t k, or the nasal stops, m n ŋ; also, that the same changes could be

FIGURE 5

Synthetic spectrograms showing second formant transitions that produce the voiced stops b, d, and g with various vowels.

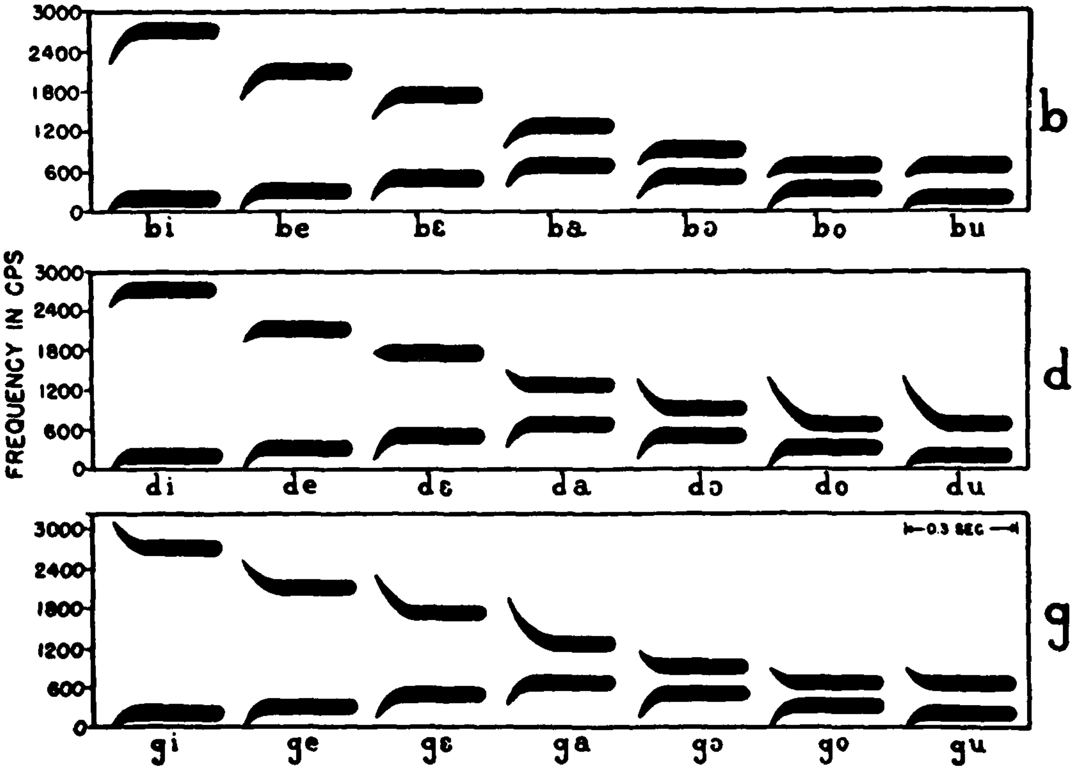

---

[d] A formant is a frequency region in which there is a relatively high concentration of acoustic energy. Formants are usually referred to by number, counting from low to high frequencies.

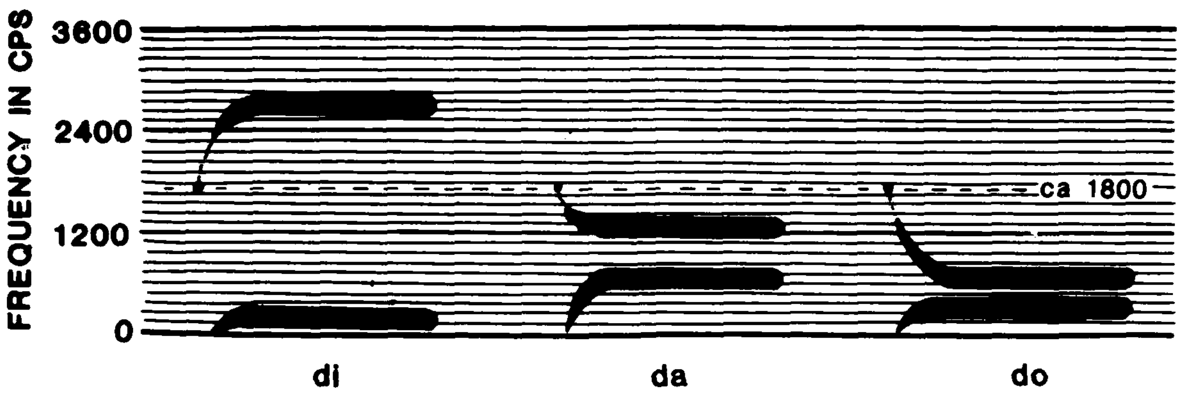

FIGURE 6
Spectrogrphic patterns for d with three vowels, showing extrapolations of the second formants to a common locus frequency (for d) at 1800 Hz.

FIGURE 7
Spectrographic patterns that illustrate the transition cues for the stop and nasal consonants in initial position with the vowel. The dotted portions in the second row indicate the presence of noise (aspiration) in place of harmonics.

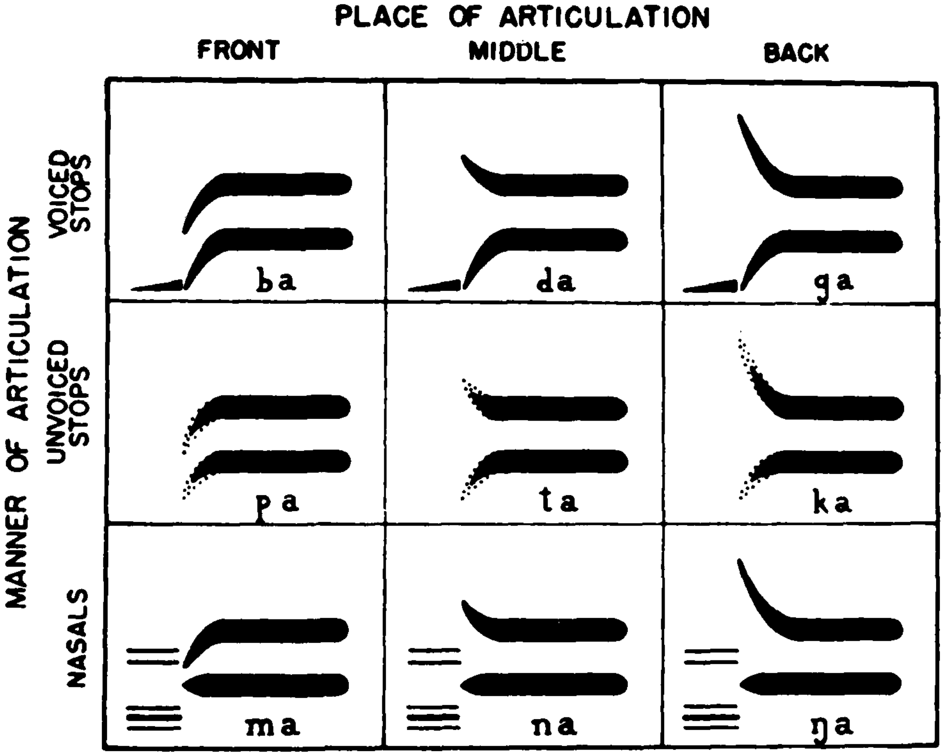

applied to a full range of vowels. Thus, results to this point could be summarized (for a given vowel) in a 3x3 array of the acoustic cues (Fig. 7), with the x-axis and y-axis corresponding to the conventional phonetic dimensions of manner and place of articulation (40).

RELEVANCE TO SPEECH SYNTHESIS

The close correspondences between acoustic cues and articulatory dimensions had important implications for an understanding of speech perception, and this set the direction of much future research (13). However, a different aspect of the results proved to be more directly relevant to the reading machine problem, namely, that the acoustic cues were essentially independent of each other and that they combined freely to give the full set of stop and nasal consonants. Notice what Figure 7 tells us: We can start with only three different manner cues and three different place cues and combine them to get nine different consonants; further, if we use these same triads of place and manner cues with the formant frequencies for the seven vowels of Figure 5, we can get 63 different syllables.

If this same combinatorial principle applies to the acoustic cues for the remaining consonants of American

English—as further research showed that it did—then one would need to know only a limited set of cue-recipes to undertake the synthesis of words and sentences never before seen as a spectrogram. It is, in fact, possible to do so, though the doing is not quite as simple as the above discussion would imply. Pierre Delattre became quite adept at this form of "synthesis-by-art"; one of his early creations is shown in Figure 8. Clearly, he had in his head an implicit set of rules to guide his painting. If those rules could be made explicit, then anyone skilled with a paint brush could do speech synthesis by rule.

PHASE THREE:
RESEARCH FOR THE VETERANS ADMINISTRATION

BEGINNINGS OF THE VA PROGRAM

There had been earlier conferences on sensory aids for the blind, but it was at the Fourth Technical Session, in August of 1956, that an active research program began to take shape, and it was only a few months later that the research program at the Haskins Laboratories—the focus of the present account—got under way.

The first of these conferences had been held in 1954, and others followed at nearly yearly intervals. They reawakened interest in reading machines for the blind, although most participants still saw the problem in terms of how to generate from the printed page a set of letter-by-letter sounds, comparable in a general way to
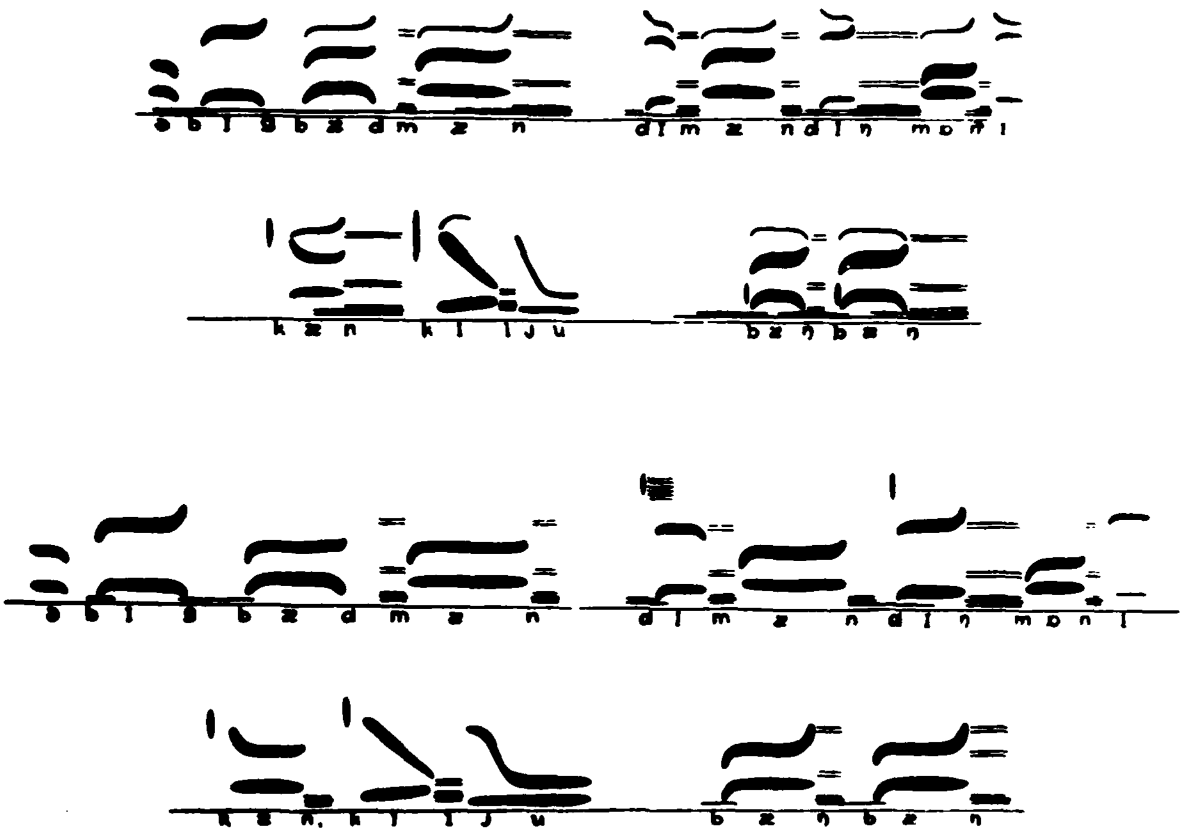
FIGURE 8
Two versions of a sentence employing principally stop and resonant consonants. The lower version is a first draft which was painted directly from the typewritten text ("A big bad man demanding money can kill you. Bang, bang."), in accordance with the "rules" derived from experiments on acoustic cues. Revisions by ear resulted in the upper version. Both were highly intelligible when converted into sound by the Pattern Playback.

Morse Code. By that view, the technical problems were not trivial, nor was the task faced by the blind person in learning an arbitrary acoustic code—but those problems had somehow to be lived with and overcome, since no other kind of reading machine seemed feasible.

A second view of the problem was that the principal conclusion from the CSD research—that arbitrary letter-by-letter signals simply would not do—might have to be accepted in spite of the technical complications that this conclusion implied. The worst complication was thought to be that the machine would have to recognize the printed letters in order to generate acceptable signals from them. Optical character recognition was then in its infancy, so this view of the reading machine problem seemed to erect a second high barrier; or, to put the matter affirmatively, there were now the two problems of devising a simple optical character recognizer, and then of teaching it to speak aloud the letters it had recognized.

The third view, put forward by the Haskins Laboratories, was that even these two technical problems—OCR and a letter-by-letter output—were not the main hurdle; rather, that the central problem was one of matching the acoustic signal to the listener's perceptual capabilities, and further, that this required the acoustic signal to be, at the very least, "speechlike". This view changed, over the course of the conferences, to the far more demanding requirement that the audible output must be speech *itself*.

The need for a speechlike output was presented at the Fourth Technical Session in a paper on "Synthetic Speech and the Reading Machine Problem." The paper also surveyed the various types of reading machines then thought to be possible, even though some seemed visionary. It now serves to show how much—and how little—was really understood at that time about reading machines and especially the output problem.

The three views of the reading machine problem were the basis for the three phases of the VA program of research, which appreciated the limitations of the acoustic code and spelling approaches, but saw also that the difficulties in generating speech from print would take years to solve. A practical program, it was believed, must have earlier and more certain payoffs even if the resulting devices might have limited capabilities. The principal contractor under the first, short-range phase of the program was the Battelle Memorial Institute, which was charged with developing and testing a device to generate arbitrary acoustic signals from print. Battelle was to build on the earlier work with Optophones and the RCA A-2 Reading Machine (1).

There were two middle-range projects: a major one, assigned to Mauch Laboratories, was to devise a machine that could recognize printed characters reasonably well and generate a spelled output (56); a smaller contract was given to Professor Milton Metfessel, University of Southern California, to press ahead with his work on a "spelling-bee" output that would gain reading speed by using very brief sound segments for the letters (44).

The long-range phase of the program, assigned to Haskins Laboratories, also had two parts: one was to build a machine with which to test the usefulness of Compiled Speech, i.e., a "spoken" output made by splicing together standardized voice recordings of words to form sentences; the second was an open-ended study of speech and speechlike signals to find out what kind of artificial speech would work best in a reading machine and how to generate it, assuming that one had available the output of an optical character recognizer.

RESEARCH ON AUDIBLE OUTPUTS

Objectives—Although the two tasks undertaken by Haskins Laboratories were formally distinct, they had a common purpose: to arrive at the best choice of audible output signals for a high-performance reading machine for the blind. There was not, at the beginning of the program or at any later point, the intent to design and build the device itself. This restriction on program objectives was due in part to the realization that an optical character recognizer would be an essential part of a high-performance reading machine, and the belief that commercial needs would make OCR devices available by the time the output problem had been solved; furthermore, engineering development was neither a strength nor an interest of the Laboratories.

It was not at all clear what kind of audible output offered the most promise, provided only that it was speechlike: synthesis seemed to have the potential for natural, flowing speech, though only if a great deal more could be learned about how to synthesize from a phonetic transcription. Even then, the often peculiar relations between the letters and sounds of words might mean that synthetic speech would always have bizarre pronunciations. An obvious competitor was compiled speech; it could avoid these strange pronunciations by using a human speaker to supply the correct sounds, whatever the spelling. But speech compiled from word recordings would have its own language problems: A single, fixed pronunciation would have to serve, even for words which a human would speak differently and with different inflections when they occurred in different contexts. Then, too, there are so many words! No recorded dictionary of a practical size could contain them all. Spelling would be a possible way to deal with the exceptions, but would be disruptive if it occurred very often.

On balance, though, compiled speech from a Word Reading Machine seemed the surer solution and the one on which practical efforts could be started without delay. Conventional tape-splicing techniques would permit initial studies of some of the language problems, though such methods would obviously be too slow and laborious for the production of the paragraph-length texts that would be needed to assess comprehensibility and acceptability by blind listeners.

This is why one phase of the research program consisted of a contract for the construction of an Interim Word Reading Machine (IWRM) to serve primarily as a research tool in studies of the language problems inherent in compiled speech. The device was to operate semiautomatically in a laboratory environment. It was not intended to be a production device for the preparation of recordings in volume; therefore, a simple design with medium speed components would suffice and design compromises could be made, so long as they did not adversely affect the quality of the voice recordings.

Pending completion of the IWRM, the research part of the program was to concern itself with audible outputs of all reasonable kinds. This included the language problems of compiled speech; it included also work on the rules by which a machine could synthesize "spoken" English when the letters on the printed page were identified for it, as they would be in a library-type reading machine. The studies were to start with the information then available about speech synthesized from hand-painted patterns; then to adapt these results to the synthesis of speech by a machine and (later) introduce automatic "corrections" for English spelling. Another goal was to devise a "speechlike" output suitable for a personal-type (direct translation) reading machine. This would require a careful study of letter shapes to find elements which could be easily identified by a simple machine and a study of the best way to assign speech sounds to those elements. Much of the experimental work—at least initially—would be done with the existing Pattern Playback equipment. Eventually, the plan was to build a laboratory device to produce reasonable quantities of synthetic speech and speechlike sounds in order to test their usefulness as reading machine outputs.

The formal objectives of the two parts of the Haskins Laboratories program are summarized in the above paragraphs. They remained the general guidelines throughout the two decades that followed, though there were several shifts in emphasis as new information and new techniques emerged. Progress was uneven, shifting from one aspect of the program to another, and some early hopes fell by the wayside, victims to competing solutions. For all these reasons, a brief chronological survey may serve as a useful introduction to more detailed accounts of the several lines of study.

Chronological Overview

Exploration of Alternatives—The first phase of the program, beginning in 1957, was concerned mainly with the competing claims of various audible outputs. It was not until 1970–71 that a clear choice could be made between the two principal contenders.

The work on compiled speech consisted of a series of small studies of such things as monotone versus inflected speech, rate of speaking, manipulation of stress, and the like. These studies continued at a steady pace, answering many of the questions, but always hindered by the need to rely on slow and laborious manual methods. These methods gave way, by the end of the sixties, to a computer facility that made possible the easy "reading aloud" of page-long texts.

The design and construction of the IWRM progressed rapidly to a point where the device was fully designed and more than half completed. At that point, the funds ran out, and although the work was carried to completion it had to be done at low priority, and at a pace that eventually made the device obsolete. Its functions were, in fact, taken over at the end of the sixties by the computer-based system mentioned in the preceding paragraph.

Progress on speech synthesis by rule, like that on the IWRM, progressed rapidly at first but then slowed, though for different reasons. The initial surge came from the work of Frances Ingemann and the fact that she had several years of research results on the acoustic cues as a basis for her work. She was able, within the first year, to organize all of this material into a set of rules for synthesis that had not previously existed, and that were fully explicit instructions on how to paint (for the Pattern Playback) the control patterns that would "speak" any desired sentence. The next advances came more slowly, but as with compiled speech, the program gained momentum again by the end of the sixties when computer facilities and an additional body of knowledge about speech had become available.

The mid-sixties were a period of uncertainty as to just where the program should go. Progress was slow on both compiled speech and speech synthesized by rule, needing (as was later learned) the technical assistance that only computer methods could provide. During those years, considerable effort was put into a new way of generating speech that seemed to evade some of the difficulties of both compiled and rule-synthesized speech. However, by 1971, interest in this new variant —called Re-Formed Speech—had succumbed to the good progress that was then being made in the synthesis of speech by rule.

Thus, by about 1970, the field of possibilities had been canvassed, with only two candidate methods surviving: compiled speech and speech synthesized by rule.

Automating Speech Production; Evaluation Studies. The objectives of the work then shifted from studies of compiled and synthetic speech to ways of obtaining fairly long passages of each type. These were needed in order to test for intelligibility and acceptability and, indeed, to make a choice between the two kinds of speech output. There had been sufficient success with both types of output to inspire thought about the kind of Library Service Center that might be set up within a very few years to provide recorded books on demand for blind veterans. This was envisaged as a central facility that the VA would itself set up and manage, with technical advice and assistance from the Laboratories.

The evaluation studies made it clear that the contest between compiled and rule-synthesized speech had been won conclusively by synthetic speech. Hence, efforts were shifted almost entirely to automating speech synthesis by rule, even though that was a substantially harder and longer job than generating compiled speech by machine methods.

User Evaluations of Synthetic Speech and Plans for a Reading Service Center. By 1973 it was possible to report that "from a purely technological viewpoint, the automated production of speech from printed text is wholly feasible. Indeed a prototype system exists at Haskins Laboratories". This did not mean, however, that all the problems were solved. It was felt that synthetic speech was reasonably intelligible and acceptable; for example, short stories played to a naive audience would be understood and appreciated even though some words and names might be missed. Thus the output was reasonably acceptable despite its machine accent. But just how intelligible the speech was, or what sounds and words were giving the most trouble, or whether in a more general sense the synthetic speech would satisfy a serious reader after the novelty had worn off—these questions could not be answered.

The first step in answering these questions was to make quantitative, controlled studies of word and sentence intelligibility, and later, of the comprehension of paragraph-length passages. The second step was to start preparing for in-depth user tests aimed at testing both the utility of reading machines in real life situations and the improvement of synthetic speech in response to user comments. Since it seemed by then unlikely that the VA would organize facilities for these user trials, plans were made jointly with the University of Connecticut to set up a Reader Service Center for blind students. It was planned to provide the students with synthetic speech recordings of assigned readings from their textbooks; also, work at the Laboratories pressed ahead on mechanizing the synthesis-by-rule procedures so that substantial quantities of recorded synthetic speech would be available.

Final Phase. By 1975, it was concluded (somewhat reluctantly) that these cooperative plans for a Reading Service Center to serve blind students and to evaluate and improve reading machine performance would have to be abandoned for lack of funding, even though the technical and human facilities were in hand. The research was turned, instead, to improving the quality of the speech synthesized by rule and, in particular, to developing a new and a better speech synthesis algorithm. The quantitative evaluations of Phase Three had shown that the intelligibility of the synthetic speech was good enough for easy comprehension of simple, straightforward materials, but that listening to it put a heavy load on the comprehension of more complex (textbook) materials. Hence, further work on the rules for synthesis would have been required in any case.

By the end of 1978, it was becoming evident that some kind of reading machine—as distinct from a library-based reading center—would soon be feasible, but with further compromises in a speech quality which was already only marginally adequate.

The foregoing overview has sketched the chronology of the reading machine research that Haskins Laboratories did for the VA. There were several simultaneous strands that can now be recounted separately and in somewhat more detail.

Compiled Speech

The sections that follow deal with some of the main areas of research on compiled speech and its language problems, as they were investigated by essentially hand methods. The account turns then to the development of a machine for doing the compilation automatically. An account of the final competitive tests between compiled and synthetic speech will be deferred until the evolution of speech synthesized by rule has been described.

Preliminary Experiments. Linguistic research on compiled speech began with an applied program of purposely modest size. The task was to record a small spoken-English vocabulary from which small test sentences could be built. There was only one significant constraint to be observed in recording the vocabulary: Only one spoken version of each spelled word could be stored for use, although that single version could be employed more than once in a sentence.

An important consideration, in the effort to compose a usable store of single tokens of spoken words, was the fact that a naturally spoken sentence is a multiword unit. All naturally spoken sentences are delivered with intonation—a variable and varying prosodic feature that extends across word boundaries, and even across phrase boundaries. This fact would complicate the attempt to generate whole, "life-like" sentences from "frozen" words which would have to appear in the same acoustic shape in every context (i.e., with unchanging pitch and pitch contour, duration, intensity, and phonic color). Nevertheless, the precise nature of the complications had to be ascertained.

The initial test began with recordings of a magazine article that had been read by a male talker and recorded on magnetic tape. The talker, who spoke with reasonably normal American speech, read the selection in four ways: in normal intonation and in a monotone, producing each of these at a normal rate and at a slow rate. Next, the individual words of the recordings were "edited apart" by listening to the tapes and marking word boundaries. Once isolated, the words (on tape snippets) were mounted separately on "Language Master" cards (which permit the separate and successive playing of small bits of speech), and were re-recorded in various grammatical arrangements to test the compatibility of the vocabulary when heard in new sentence structures.

Informal listening tests of the manually-compiled sentences by members of the Laboratories' staff produced the following observations:

Prosodics (The melody, timing, and loudness of speech)

1. A word's acoustic shape normally changes according to its verbal and intonational context.
2. A word in prepausal position must be acoustically longer than it is in other positions.
3. Polysyllables are never normally spoken in a monotone.
4. Listeners feel that pitch is the primary cue to stress and intonation.

Grammar

1. Articles and prepositions are usually less prominent (perceptually and acoustically) than other parts of speech.
2. When the vocabulary is recorded by the talker, certain highly frequent words must be spoken many times, in a variety of ways, so that the most probable (or most neutral?) form of each word can be selected for the basic vocabulary supply. A case in point is the

most frequent English word, the, which has four main possible pronunciations; another example is which, which can play more than one grammatical role.

Punctuation

A short interval of silence (e.g., 750 msec) in the output can substitute for a printed comma and a longer silence (1750 msec) can suggest a period. These durations work well for the somewhat slow rate that the particular talker used, but they might have to be changed for speech at other rates.

The talker's manner of speaking

1. If the vocabulary is spoken in a monotone, the words are fairly compatible when transplanted into sentences, but they are dreary and slow. Listeners find monotone delivery of text too terribly dull to endure for more than a very few minutes.
2. An intentionally undramatic (but not monotone) reading produces quite good words for recombination into new sentences.

Some of the observations noted above were made on the basis of negative evidence. In attempting to make sentences from single prerecorded words it was easy to discover important features of normal speech by their sometimes jarring absence in the trial sentences. For example, a word put into prepausal position (at the end of a sentence) was often heard as much too short, although it was heard as sufficiently long when located elsewhere in a sentence.

Not all the results of the preliminary linguistic study surprised the investigators, although some did. An attempt to address some of the problems pointed out by the observations—especially with respect to prosodics—was made in designing the IWRM and later, even more successfully, in the computer-implemented speech-synthesis-by-rule system devised by Mattingly. Other problems, such as the multigrammatical roles of English words, which are encountered in generating speech from print, still remain to be solved. It seems unlikely that a solution to this problem can be found until computer programs for parsing a text and analyzing its meaning become more sophisticated than they are today.

The Search for Prosodic Descriptors. To complement these early experiments with compiled speech, a study of the acoustic properties of stress and intonation in real speech was undertaken. A pilot test, employing the same talker, was run to establish procedures for later data acquisition. Speech analysis was performed using spectrograms, waveform traces, and fundamental frequency contours recorded on 35-mm film.

Provocative problems were encountered in trying to measure syllable duration, intensity, and even fundamental frequency. (How could perceptually important dynamic events be measured and described acoustically? Who could say where syllables began and ended, when they visibly flow together in the acoustic record of speech?) An element of arbitrariness was inescapable in deciding what was the significant aspect to measure. In the end, the peaks of the syllable intensity and frequency contours were selected as the principal descriptive features of these parameters, whereas for syllable duration, acoustic amplitudes augmented by listening served as descriptors of the syllable boundaries.

Using these descriptors, the prosodic aspects of three long sentences spoken by each of four adult talkers (including a female with a low-register voice) were analyzed acoustically. The measured items, consisting of some 400 syllables, were made by tedious manual methods, there being no other way available at that time.

One observation that emerged from the prosodic study led to the hypothesis that polysyllabic words and highly frequent phrases share a common prosodic property, that is, a persistent stress relationship among their component syllables. A further observation indicated that the direction of combined prosodic feature movement (up or down, from one syllable to the next) was the acoustic key to word accent (lexical stress). These ideas were tested in an experiment in stress perception that was run concurrently, using as stimuli brief syllables of synthetic speech whose frequency, duration, and intensity components were controlled and manipulated. In formal listening sessions, 10 staff members selected the more prominent (stressed) syllable in each of 64 syllable pairs. The results showed clear evidence that the prosodic features are additive in stress perception, as the descriptive study had suggested. The experiment did not reveal how stress and intonation could be separately defined, however, yet it could be said that fundamental frequency and intensity peaks do tend to diminish across a long utterance, and that syllable duration rises before a pause.

Preparation of a Larger Lexicon. Regrettably, those characteristics, no matter what their generality or importance for naturalness, could not be used by the IWRM in generating compiled speech, since it required that a single recorded version of a word (with its set pattern of pitch, loudness, and length) must be used on every occasion. The best goal attainable appeared, therefore, to be one of making word recordings that would be neutral (i.e., most adaptable to all sorts of contexts), and yet fairly natural (consistent in tempo, smooth in articulation and not monotonous). It seemed reasonable to hope that an impression of normal sentence stress would be supplied by the listener, much as it is by the reader of a printed text, largely on the basis of syntax and word order.

If, however, word order is contradicted by abnormal stress relationships among the (rearranged) recorded words, ambiguities or confusions in comprehension result. Hence, in order that the words might be recorded and stored in the lexicon in their most congenial forms, the effects of abnormal stress call for an examination of the words in respect to their overall frequency in written English, as well as in respect to their most frequent grammatical and phonological environments and semantic functions.

A statistical study of English words was, therefore, begun with a scrutiny of the Dewey (17) and Thorndike and Lorge (59) lists of syllable and word frequencies. A list of about 7000 of the most frequently used words was drawn up for the IWRM vocabulary. The grammatical usages possible for each word were listed. The results of this study were both enlightening and, in a way, discouraging: The diverse grammatical functions, especially for the most frequent English words, make obvious the difficulties to be overcome in the conversion of print to speech by machine. Thereupon, a grammatical investigation of a number of randomly selected texts (portions of novels, newspapers, magazines, and personal letters) was made with the intention of learning which part-of-speech sequences (syntactic structures) most often occurred.

It was found that the prepositional phrases occur with overwhelming frequency in texts of all sorts. The first words of prepositional phrases are words of absolutely greatest frequency—a preposition (e.g., of, in, with, by and to) is most often followed by an article (of which only three exist in English: the, a, and an)—words usually spoken with a very low stress. A prepositional phrase ends in a noun (as do sentences, in most cases). Nouns receive relatively high stress; also, nouns terminating prepositional phrases (or sentences) are either potentially or actually prepausal, and so usually exhibit a falling pitch contour and declining loudness.

Based on such observations, "prescriptions" were evolved for the manner in which the vocabulary for compiled speech should be spoken.[e] Fundamentally, the rules relied on (i) the probability that a given part of speech would occur in a certain grammatical context, and (ii) the probability that a given part of speech plays a patterned role in intonation. By referring to acoustic and perceptual analyses of real speech, along with reference to the experimental sentences in compiled speech, it became possible to describe objective intonational data in terms that a talker could use in subjectively monitoring his own speech when producing the huge lists of words required for the compiled speech lexicon.

After a number of try-outs for the role of talker, a male graduate student in linguistics was chosen to perform the difficult task. Working part-time weekdays for about 13 months, he recorded the nearly 7200 lexical items (in one-hour sessions), following the very exacting instructions for speaking the words. (These had been grouped in a long series of scripts by the initial sound of words, by number of syllables, and by part of speech.) Nouns were delivered at normal pitch, with falling intonation, at normal speed and loudness; verbs at a slightly lower pitch level, faster and less loud than nouns; (most) adjectives at the pitch of verbs, but with rising intonation, etc.

The talker—a diligent, talented, and tireless speaker—managed to comply with these prescriptions. When his job was completed, thousands of word recordings had been collected that were deemed compatible in pitch, loudness, and length. A small team of assistants kept pace with the daily recordings. One person edited each hour-long tape to isolate the words; another one or two people manufactured Language Master cards that carried the individual words as separate spoken items; finally, the editor punched a small hole fore and aft of the spoken word on each card. (The holes, plus a photoswitch, were used to control another recorder that was specially modified for start-stop operation.) In all, about 1.3 miles of adhesive-backed magnetic tape was edited, cut apart, and mounted on the (homemade) Language Master cards. Thus, the lexicon was gradually assembled.

We now backtrack slightly to the period just preceding the above recording operation, to mention two matters of importance to the structure of the vocabulary—missing words and helpful suffixes.

Missing Words posed a problem, no matter how large the recorded lexicon, since some words that had not been included in the storage would inevitably occur. In the originally proposed lexicon (6000 words) it had been estimated that some 5 percent of the words in an ongoing text would be missing. The practical solution for that problem was to add the spoken letters of the alphabet to the lexicon, so that spelling aloud would replace the missing vocabulary item. Although each of the 26 letters of the alphabet was spoken rapidly (and very carefully) prior to storage, each one was unavoidably one whole syllable long (and w was even longer). This meant that the overall word rate of a sentence declined considerably when even one word had to be spelled. Moreover, words requiring spell-outs were longer, on the average, than the (high-frequency) words that constituted the recorded vocabulary—resulting in greatly reduced word rates in any sentence that needed several spelled words. Still another negative feature of the spelling procedure was the fact that the missing words were the least predictable ones in the sentences, and therefore caused comprehension problems for the listener. Worst of all, listeners found it irksome and hard to shift quickly from the medium of speech to the medium of spelling.

Helpful Suffixes, on the other hand, provided a way to increase the effective size of the lexicon very substantially, simply by adding a few extremely frequent (spoken) suffixes:

[s] as in hats or writes
[z] as in heads or rides
[ɪz] as in roses or rises
[ɪŋ] as in heading or writing
[t] as in looked
[ɪd] as in wanted

Thus, for example, a word stored only as a singular noun could easily be generated in its plural form (e.g., hat + s), or, a regular verb in the lexicon could be inflected (e.g., look + s; look + t) by adding the appropriate sound to the base of the word. (Rules were written for analyzing the word into base and suffix.) In turn, this

---

[e] This way of generating the words for compiled speech probably accounts for the reasonably good results we obtained with sentences and paragraph-length texts, even at nearly normal speech rates (see infra). A less optimistic view of compiled speech was taken by Stowe and Hampton (57) on the basis of intelligibility tests of words spoken in isolation at slow and fast rates but without special attention to the manner ("prescription") of their production.

study led to the writing of preliminary rules for converting spelling to sound. These rules worked for most of the vocabulary, with the exeception of only those words having highly irregular pronunciations. (The general letter-to-sound rules were modified later and written as rules for the automatic pronunciation of surnames.)

During this study, an intriguing fact came to light: It was found that some very frequent suffixes (such as -ation) have fixed stress, and tend to "predict" the stress shape of the preceding syllables in the words to which they are attached. This observation was tucked away for future reference (when automatic lexical stress prediction might be wanted) along with a list of the "stress-stable" suffixes, and of prefixes that might also be used for stress prediction when suffixes were either non-predictors or altogether absent from a word.

Early Preparation of Compiled Speech Texts. With a spoken vocabulary mounted on some 7000 cards, we were now in a position to generate very many different sentences and long connected texts. It must be remembered, though, that the generation of compiled sentences in this early part of the project relied on manual retrieval of the Language Master cards, and manual transfer of the single word recordings from the Language Master machine to the stop-start re-recording device. Although it took hours to compile a thousand words of text, a large variety of literature was duly sampled. Selections from, for example, Bertrand Russell's writings, recent novels, obscure Russian novels, the news and sports page of the NY Times, random sections of Time Magazine, and personal letters were converted to compiled speech—and subsequently appraised by a variety of listeners, ranging from the Laboratories' staff to visiting scholars (some of whom were blind).

The listeners' consensus was that compiled speech was generally intelligible. The voice was pleasant, but the delivery was often a bit dull, partly because the word rate was on the slow side (about 120 words per minute, if no spelling occurred in the selection; much slower when words had to be spelled). And spelled words interfered drastically with comprehension. There was also, of course, a certain choppiness in the delivery —unavoidable when "canned" words were abutted to build sentences. This confirmed our belief that a really satisfactory reading machine for the blind would have to deliver speech that was truly continuous. Also, naturalistic intonation is a sine qua non of continuous speech, whereas compiled speech was, at best, a mild caricature of normal delivery.

Word Duration and Speech Rhythm. Nevertheless, despite obvious shortcomings, compiled speech continued to be studied and it proved to be instructive in a number of ways. One very obvious problem concerned word duration and speech rhythm; clearly, they were interrelated, and both were deficient in the compiled speech. The problem was a challenging one because duration is affected by numerous factors which, if better understood, could lead to the writing of better rhythmic rules for speech at a variety of rates—and also because speech rate is a prime concern of blind people who must do their reading by listening.

A series of studies on segment, syllable, word, and phrase duration in continuous speech was undertaken at about this point and led to a paper entitled "The Elastic Word" (30). Aside from illustrating the durational flexibility of various linguistic units, that paper also demonstrated that native speakers of English closely share durational patterns in their speech, a fact that underscored the need for very carefully specified rules for duration in synthetic speech (and other modes of output). This requirement may be seen in retrospect to have foreshadowed the early obsolescence of speech compiled from the durationally inflexible vocabulary of the IWRM.

An Interim Word Reading Machine

It was clear from the beginning of the program that some kind of machine would be needed to produce long recordings of compiled speech, i.e., to perform automatically the equivalent of many thousands of tape splicings. The overall design was fairly simple and straightforward: the device used Teletypesetter (TTS) tapes as input and accumulated voice recordings, word by word, as its output; it had to have a sizeable dictionary so that only a few words would need to be spelled; also, it had to operate automatically, reliably, and with a minimum of supervision. Actually, quite a number of design considerations were involved in blending these requirements into a single machine.

The Interim Word Reading Machine was an interim device only in the sense that it bypassed such major engineering problems as character recognition and real-time access to a large memory. Teletypesetter tapes (available to us from Time Magazine), provided a large amount of input material that would otherwise have had to come from character-recognition equipment. The need for fast access to a large memory was also evaded because the stored recordings were not read out immediately (as they would have been in a real-time device), but were transferred to a start/stop recorder that could wait as long as necessary for the next word to be found. The quality of the output speech was not affected by these compromises; the only penalty was speed, since the IWRM required hours to generate a speech recording that lasted only minutes.

Operation of the Interim Word-Reading Machine. The operation of the device is illustrated in Figure 9. A word from the TTS input tape is read into the Decoding unit, where each character is interpreted and either rejected (as relevant only to typecasting) or accepted and stored as a digital code. A search of the Dictionary tape can now proceed. The identity of the first letter of the stored word is used by the System Control unit to select just one of the 14 available pairs of tracks on the Dictionary tape. One track of this pair contains the digital addresses of words that begin with the same letter as the target word; the other track contains voice recordings of the corresponding words. The search proceeds at high speed, with the digital addresses from the dictionary tape being compared, bit by bit, with the target address stored in the shift register of the Scan-

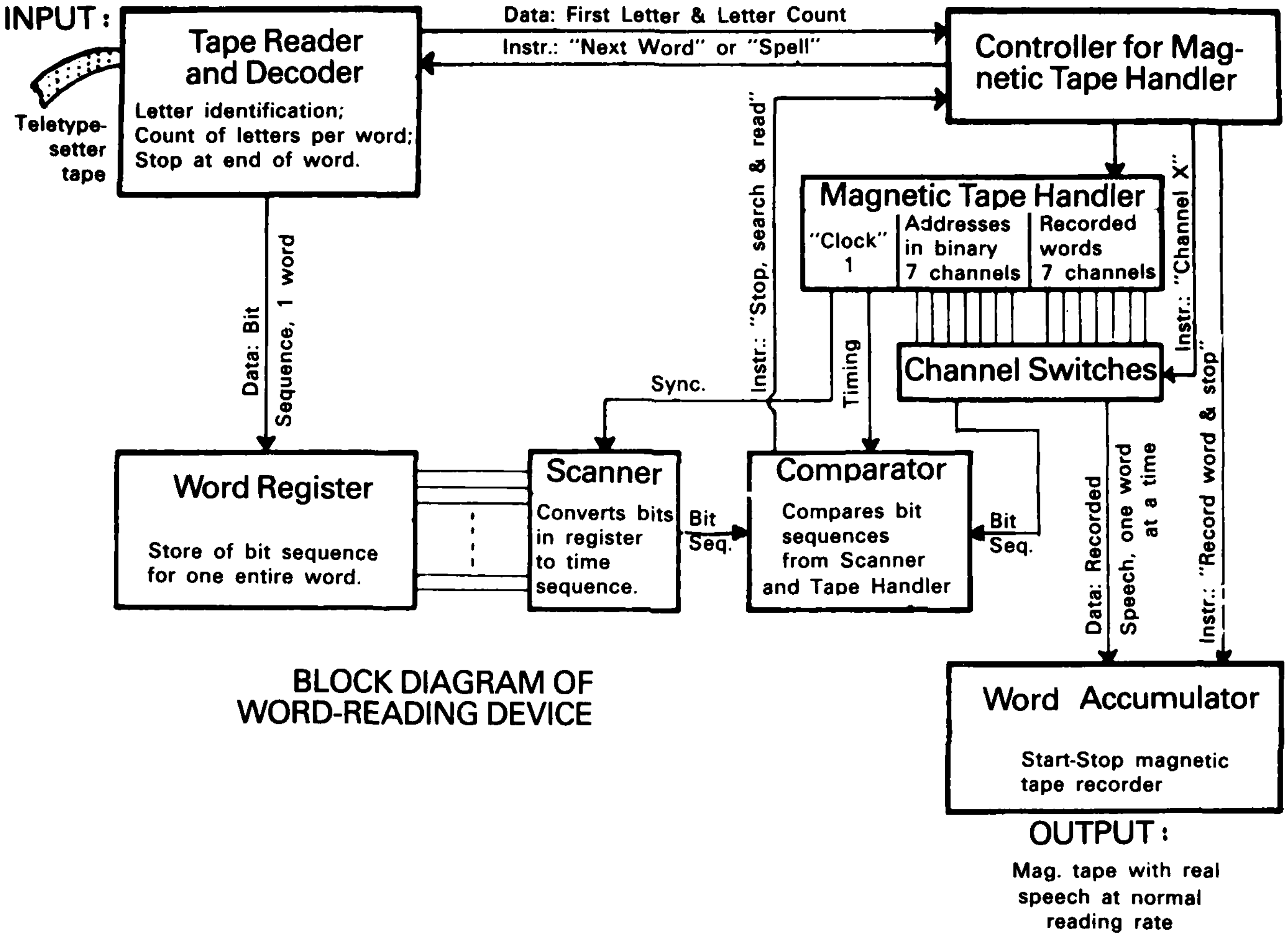

FIGURE 9
Operation of the Interim Word Reading Machine, showing functions performed by the component units and (separate) paths for data and instructions.

ner-Comparator unit. Synchronization is checked (or reestablished) by clock and framing pulses from a clock track.

An exact match between the two addresses means that the desired word has been found. Accordingly, the transport of the Dictionary tape is shifted abruptly from fast forward to slow reverse in order to transcribe the voice recording onto the quarter-inch tape of the Word Accumulator, with due attention to the duration appropriate for the audio version of the word. It now remains only to return the Dictionary tape to its home position at the middle of the tape and to initiate the reading of the next text word from the TTS tape. In practice, the entire cycle required, on the average, about 10 seconds to yield about one-third of a second of speech: i.e., the IWRM operated at about one-thirtieth of real time.

The Need to Spell; Specialized Vocabularies. What happens if an exact match is not found? Since the words on each track of the Dictionary tape are ordered by word length, the search for a word that is, say, five letters long need proceed no further than the first word that has six letters. Moreover, search time is further reduced because the words that are used most frequently, usually the shorter words, are examined first. Failure to find the target word means, in the simplest case, that each letter must be sounded out. An alternative is possible, one that would certainly be needed in a full-scale word-reading machine: Failure to match the address in the main Dictionary tape would initiate a second search in a track pair reserved for specialized vocabularies. It was planned that the IWRM would test the usefulness of this procedure.

The vocabulary of 6,000 words—later increased to 7,200—was chosen as a design compromise among several factors: complexity of the tape-handling equipment, cost of recording the Dictionary tape, and adequacy of the vocabulary as indicated by the frequency with which missing words would have to be spelled. Some idea of the trading relation between vocabulary size and frequency of spelling can be had from these rather rough estimates: 50 percent spelling rate for a vocabulary of 100 words; 25 percent for 1,000; 10 percent for 3,000; 5 percent for 6,000; 1 percent for 15 to 20,000 words. (The number of different words in Webster's Collegiate Dictionary is about 60,000; more than 600,000 are claimed for Webster's New International Dictionary.) Thus, we expected that the IWRM would have to spell about one word in each twenty words of running text.

Instrumentation. The design of the IWRM was fairly conventional. A Friden paper tape reader was used to transmit the TTS characters directly to a relay decoding tree and transistorized shift register for temporary storage. The tape-transport mechanisms for both the Dictionary and the Word Accumulator were fast start-stop units that moved their tapes from bin to bin. The inch-wide Dictionary tape was searched for digital addresses at 60 inches per second, and its audio recording was read out and copied at 3.75 inches per second.

The Scanner-Comparator unit proved to be by far the most complex and expensive part of the entire reading machine. The circuit complexity was due in part to the dual requirement that the Scanner-Comparator serve in recording the tape initially, as well as later in finding and playing back the dictionary entries. The construction of circuitry of this kind would today be considered fairly trivial; indeed, the entire operation would probably be relegated to a microprocessor. But when the IWRM was built, the commercial modules typical of second generation computers were not yet available, and we had to build our own printed circuit cards (including even etching the cards). Likewise, both of the tape-transport mechanisms had to be built in the Laboratories' own shop.

Since the functions to be performed by the System Control unit depended on the detailed structure and function of all the other units, its design was deferred until those other units were built. In fact, the design was eventually executed in software for a small computer.

By mid-1958, the design constraints for the above components had been determined, and by mid-1959, all *of the design and about two-thirds of the construction* had been carried to completion. However, the fixed-price contract funds were exhausted by this time and, although the Laboratories eventually carried the development to completion at their own expense, progress was slow after mid-1959.

Demonstration of an Operating System. A functionally complete and operating system was demonstrated to the VA in December, 1965. The IWRM searched for the words of a sentence in a small trial dictionary, found the words, and assembled the recordings into a connected sentence on a word accumulator. The speech quality was acceptable. However, the IWRM was not then in deliverable form as a completed device, nor did the Dictionary tape contain the full 7200-word vocabulary (then on Language Master cards).

A decision to terminate the project at this point was made on the basis of a number of considerations: the most cogent were that the system was already technically obsolete and that the substantial amount of additional work needed to put it in final form and to record the dictionary tape would be largely wasted, since the same result could be obtained by computer simulation of the system (as, indeed, it was).

Compiled Speech by Computer Simulation of a Word Reading Machine. By 1969, the IWRM had been simulated on a medium sized computer. Some hardware peripherals had to be designed and built for this work, in particular a pulse code modulation (PCM) system for converting the analog speech wave into digital form; however, most of the effort went into programming the various operations. The system described below was largely created by one of the authors' colleagues, Dr. George Sholes.

With the 7200-word dictionary recorded on conventional digital magnetic tape, the process of generating a passage of compiled speech from a punched paper tape input is as follows: the punched paper tape (corresponding to about one typewritten page of text) is read into the computer and each word is assigned a number corresponding to its serial position in the text. Next, the digital magnetic tape is searched from beginning to end to find "matches" between words stored on it and words of the input text. Each record on the dictionary tape consists of a brief heading that contains the spelling of the word, followed by a much longer section that contains the digital version of the spoken word. The heading is compared with every word in the input text while the audio part of the record is being stored in core memory. If no match is found, then the dictionary tape continues to run and the next audio record is written over the last one; when a match is found, the audio part of the record is rewritten onto a disk file, in a sector numbered to correspond with the serial number of the word from the text. (Since this same word might appear several times in the text, the search is carried to the end of the text and the audio part is written into corresponding sectors for all other instances of the word.) Then the search of the dictionary is resumed.

In this way, the disk file comes to contain the audio counterpart of each text word in text order, except for those words of the text which were not matched by the dictionary tape. Such words are given a distinctive code and their spelling is entered into the disk file so the word can be spelled at the proper time (from letter recordings also contained in the disk file.) The final operation is to read the disk file serially and regenerate (and record) the speech using the PCM output system.

Paragraph-length texts were produced, using the digital word dictionary and punched paper tape input for the text. Speech quality was exactly comparable with that obtained by manual methods, except that it was free from the clicks between words that had sometimes marred the earlier recordings. In short, the IWRM then existed in computer-simulated form, and operated successfully.

Summary and Conclusions. *The original engineering* concepts for the hardware IWRM appear to have been sound and were in fact realized, although at a much later date than had been planned and under circumstances that made it seem wise to terminate construction of the device at the stage of a demonstrated working system.

In retrospect, several factors contributed to this final outcome; perhaps the principal one was a failure to appreciate fully the complexity of the device. This led to negotiated funding under a fixed-price contract that was about half as much as was actually needed. The consequent lack of funds slowed the work. External events also played a hand. The period from 1957 to 1962 was one of extremely rapid technological advances, away from vacuum tube circuits to solid state electronics and to the development of cheap modular circuits for handling digital information. Thus, in June 1958 when the Scanner-Comparator unit was being designed, one could not have bought suitable printed circuit cards except at prohibitive prices; yet by the time the unit was built and working on the bench, modules were so plentiful and so inexpensive that it seemed foolish ever to have fabricated them at the Laboratories. Finally, computer methods were becoming so inexpensive and were so superior in flexibility that one would not then have considered building a hardware device. Indeed, the objectives of the contract were soon met completely by computer simulation, as the foregoing section relates.

The Evolution of Speech Synthesized by Rule

We knew, when the Laboratories program of research for the VA began in 1957, how to get reasonably intelligible speech from the Pattern Playback even when we did not have a real spectrogram to copy. We called this "synthesis-by-art" because it depended on long familiarity with painting the patterns that had been used in the search for the acoustic cues. Would it be possible to write down recipes, or rules, that would enable someone who lacked that experience to paint equally good patterns? What would be the underlying structure of such rules? And was enough known about the cues, in a reasonably quantitative way, to make the rule writing possible? These were the problems that faced Dr. Frances Ingemann when she joined the program late in 1956 to apply her linguistic skills to this task.

The central problem was one of units—how big should they be? Clearly, words were too big and there were too many of them. Words served well for compiled speech, but only because a human speaker knew how to generate large numbers of them. But for synthesis, one would need to have long and complicated rules for each word, hence thousands of such sets of rules for a usable dictionary.

Syllables would seem a better choice, or even half-syllables (formed by cutting at the middle of the vowel). Most of the work on cues had, in fact, been done with either CV or VC syllables; moreover, no more than a few hundred half-syllables would be needed for a rather good approximation to normal English.

The phoneme was another possible choice and, though much work had been done with syllables in searching for the acoustic cues, we had interpreted our findings as cues for the phonemes (with the tacit understanding that these phonemes were not to be found as separate and independent parts of the speech signal). Phonemes had the advantage that there were only about 40 of them for English, so the number of rules would be manageable. However, the cue description of a given phoneme was different for each different neighboring phoneme with which it might be paired, and this would require either very complicated rules for the individual phonemes or a second set of rules to deal with interrelationships. While this was not as simple a situation as one might desire—and there are other complications not yet mentioned—it seemed the most promising approach available and it made direct use of the research findings about cues. Certainly, that research had shown how futile it was to treat speech as if the underlying units could be shuffled around as moveable type is in printing.

Dr. Ingemann did find, though, that a phoneme-based rule system could be very considerably simplified by taking account of the subphonemic dimensions (features) according to which phonemes organize themselves into groups such as the stop consonants (according to manner of production) or the bilabial consonants (according to the place of production). Perhaps the best way to see the structure of the rules is to consider an example. Figure 10 shows the kinds of rules needed to synthesize the word "labs"—synthesize in the sense of creating a pattern for the Playback according to precise and explicit instructions. The two dimensional structure of the rules is clear from the upper half of the figure; thus, for each of the four phenomes there is a set of conditions (reading down the columns) that need to be realized simultaneously. Likewise for each of the four rows, the interrelations among neighbors are specified (implicitly) in terms of the formant loci.[f] The labels on the rows—manner, place, voice, and position—are familiar subdimensions from articulatory phonetics, and it is the decomposition of the rules that buys simplicity for the system. Thus, the specific phoneme specified by a column is the only common member of the various groups of phones for which manner, place, and voicing rules have been given. The actual rules for, say, manner of production are written for whole classes of phones and so there are only as many such rules as there are classes—not individual phonemes. The same is true for place, voicing, and position rules. Even though several rules must be used, the total number of rules can be substantially less than the number of phonemes.

At the end of 1957, Frances Ingemann had, in fact, written a recipe book for speech synthesis by rule (SSBR) which incorporated all that we then knew about the acoustic cues. It was sufficiently explicit for the synthesis rules to be used by anyone, and the resulting speech was, for the most part, fully intelligible, though woodenly machinelike. She presented a demonstration recording to a meeting of the Acoustical Society of

---

[f] Thus, in proceeding from consonant to vowel, the locus specifies that formants should begin at frequencies characteristic of that consonant, and then proceed within a specified time to the formant frequencies characteristic of the vowel. This defines the "transition" between the two phonemes.

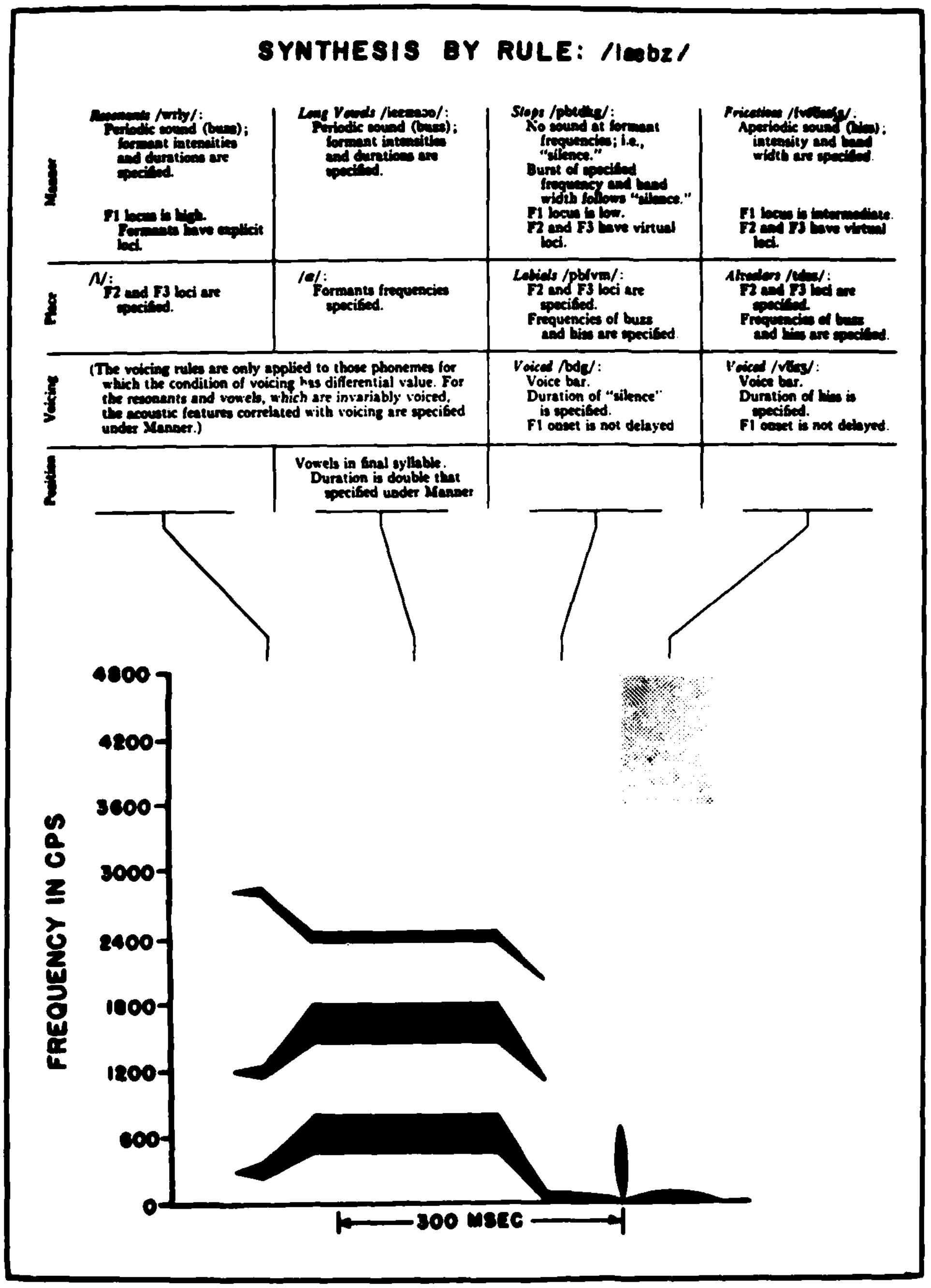

SYNTHESIS BY RULE: /læbz/

Manner	*Resonants* /wrly/: Periodic sound (buzz); formant intensities and durations are specified. F1 locus is high. Formants have explicit loci.	*Long Vowels* /ieɛæɑɔo/: Periodic sound (buzz); formant intensities and durations are specified.	*Stops* /pbtdkg/: No sound at formant frequencies; i.e., "silence." Burst of specified frequency and band width follows "silence." F1 locus is low. F2 and F3 have virtual loci.	*Fricatives* /fvθðszʃʒ/: Aperiodic sound (hiss); intensity and band width are specified. F1 locus is intermediate. F2 and F3 have virtual loci.
Place	/l/: F2 and F3 loci are specified.	/æ/: Formants frequencies specified.	*Labials* /pbfvm/: F2 and F3 loci are specified. Frequencies of buzz and hiss are specified.	*Alveolars* /tdsz/: F2 and F3 loci are specified. Frequencies of buzz and hiss are specified.
Voicing	(The voicing rules are only applied to those phonemes for which the condition of voicing has differential value. For the resonants and vowels, which are invariably voiced, the acoustic features correlated with voicing are specified under Manner.)		*Voiced* /bdg/: Voice bar. Duration of "silence" is specified. F1 onset is not delayed	*Voiced* /vðzʒ/: Voice bar. Duration of hiss is specified. F1 onset is not delayed.
Position		Vowels in final syllable. Duration is double that specified under Manner		

FIGURE 10
Table illustrating the rules for synthesizing the word "Labs", and the pattern derived therefrom for use with the Pattern Playback.

America (33) and later co-authored the definitive paper in the field, "Minimal Rules for Synthesizing Speech", that was read (by invitation) before the Acoustical Society of America by Alvin Liberman (41).

The Search for Naturalness. The initial success in formulating rules that would generate intelligible sentences from strings of phonemes had come quickly and easily, in part because it exploited almost a decade of background research. But revising the rules to make that speech sound reasonably natural, and a little more intelligible, was a slow and discouraging task, and it was nearly another decade before synthetic speech by rule showed much promise as an output for reading machines.

The difficulties were of several kinds: lack of knowledge, lack even of a clear definition of the problem, and lack of instruments that were adequate to the task. In the earlier work on cues for the sounds of speech, there were clear criteria for knowing when a significant variable was being manipulated and when an answer had been found. This was not true for naturalness and there was no real understanding of the relationship between acoustic variables and speech quality. It was not even clear how much of the blame for poor quality was inherent in the hardware synthesizers then being used and how much was due to the signals that controlled them. We knew, of course, that the Pattern Playback had a number of limitations that might well affect naturalness; the most obvious was the total lack of pitch modulation. There were other synthesizers of the formant-generator type that could manipulate voice pitch and they made very nice vowels, but they did not generate natural sounding speech. It was, therefore, a real milestone when John Holmes succeeded, after several months work, in synthesizing a single sentence that was literally indistinguishable from the voice recording with which he had started—thus proving that poor speech quality should not be blamed on the hardware.

Although limitations of knowledge and equipment were genuine difficulties, some of the faults of the speech synthesized by the original set of rules were so obvious that there was little doubt about what should be done to correct them. For one thing, the timing was all wrong, since all syllables were about the same length and gave the impression that the speech had been set to a metronome. This led us, and others, to study the relative durations in natural speech in order to write rules that would give our synthetic speech a more natural rhythm. Even with the Pattern Playback, it was quite possible by modulating vowel durations to make the stresses fall on the right words. It was less easy, but still possible, to write rules that would do this on the basis of the phonetic structure of the sentence (and the punctuation of the written text).

A related problem was how to synthesize unstressed syllables in such a way that they would be unobtrusive and yet not lose all character. This led to further work on the shifts in vowel formant frequencies that are a part of destressing.

Intonation was of course another aspect of the synthetic speech which could enhance—or destroy—its naturalness. A good deal was known, in a descriptive way, about changes in voice pitch during ongoing speech, but it was difficult to sort out the changes that were being used to signal stress from those that were linked to the syntax. Without this information, it was difficult to do much about rules for intonation, though it was quite clear that wrong intonation was a serious defect. Our work in this area depended initially on a synthesizer that used painted patterns—in much the same way as the Pattern Playback did—to control the output half of a vocoder, and thereby gain control over the pitch as well as the spectrum of the synthetic speech.

The Computer: A New Tool for Synthesis By Rule. Some progress was being made in our laboratory and elsewhere in dealing with these problems of naturalness but the pace was slow, in part because experimentation with hardware synthesizers was cumbersome. The situation began to change as computers became available. The rules for synthesis, once programmed, could then be used to generate many trial texts and so quickly show where difficulties might lie. The Bell Telephone Laboratories took the lead in this development and, in 1961, Kelly and Gerstman described and demonstrated "An Artificial Talker Driven from a Phonetic Input" at a meeting of the Acoustical Society of America (36). This was a tour de force combination of computing skills that were then being developed at BTL with the knowledge about acoustic cues that Gerstman had gained from his participation in the research at Haskins Laboratories. In 1964 Holmes, Mattingly, and Shearme at the Joint Speech Research Unit (JSRU) in England developed a mechanized system for generating synthetic speech by rule (31). By 1966, Haskins Laboratories had acquired its own computing facility and had built a computer-controlled formant synthesizer. Also in 1966, Ignatius Mattingly joined the Haskins staff and undertook (as a thesis project) to program this equipment to generate spoken American English by rule. He was in a position to draw on his earlier work at JSRU as well as the work at Haskins Laboratories, and by 1968 he had completed his thesis project (43).

It is interesting to note how dramatic was the change that computer facilities made possible. The following quotation is from a conference report that one of the authors of this paper gave on "High-Performance Reading Machines for the Blind" at St. Dunstan's, London, in June 1966 (58). In commenting on the merits and limitations of synthetic speech (which then seemed less promising than some form of compiled speech), the paper concludes, "Thus, synthetic speech as a means of realizing a reading machine poses a very real dilemma: it is potentially a simple method, but an "iffy" one—it will work if a simple letter recognizer can be built, if special circuitry can be designed for implementing the rules, and if the listener will be satisfied with bizarre pronunciations and less than perfect intelligibility."

By 1968 pessimism about the prospects for using synthetic speech in a reading machine had changed to optimism, largely on the basis of Mattingly's successful undertaking. True, there was much yet to be done and it was still not clear whether a reading service for the blind, if it were to be established within the next few years, should use compiled speech or the new synthetic speech. Definitive tests with potential users had still to be made. But it was clear that synthetic speech must be given serious consideration.

Mattingly's SSBR program used, as input, sequences of phonetically-spelled words interspersed with stress and juncture symbols. Three levels of stress were recognized (high stress, mid stress, and no stress); they were reproduced in the output speech as increases in syllable pitch, loudness and duration. The juncture symbols that marked phrase boundaries indicated the pitch contours that the computer should use in synthesizing that phrase. A group of acoustic-phonetic rules, expressed in tabular form and capable of alteration by an experienced user, were responsible for carrying out a conversion of the input string into a set of 15 synthesis control parameters. The rules specified the trajectories that the control parameters should take to produce consonants and vowels and, in addition, the overlapping effects produced by coarticulation in fluent speech. These control parameters dynamically manipulated the formant-type speech synthesizer. In addition, Mattingly developed an executive program that made it relatively easy to revise and/or supplement the rules.

Abandonment of Speechlike Output and Re-Formed Speech

We were not alone in clinging to the hope that it would be possible to bypass the very considerable technical problems in making a high-performance reading machine based on letter recognition and the use of spoken English. How much simpler it would be if only the device could find, in the shapes of letters, enough information to generate acceptable sounds! We were convinced that these sounds had to be "speechlike" in the sense that they could be pronounced easily by a speaker of English, though the result might well be a jabberwocky language. Our early experiments with one such language, WUHZI, had convinced us that it could be learned fairly easily.

The hidden difficulty, and the one that eventually led us to abandon the whole idea, seems simple in retrospect. If one considers that very many commonly used words differ from each other by only a single letter, then it is clear that the shapes of these words will not differ very much either. Hence, one would need quite detailed information about shape features—almost as many bits of information as would be required for complete recognition of the letters. To be sure, some bits could be saved by using a limited inventory of phonemes in synthesizing the artificial language and one might take advantage of regularities in the way words are constructed; even so, a rough calculation suggests that one could expect no more than a 20–25 percent reduction in the information that would have to be extracted from the word shapes.

Re-Formed speech, essentially a hybrid between compiled and synthetic speech, was a child of the mid-sixties—when the compiled speech seemed feasible but not very good and synthetic speech promised to be fairly good but seemed not very feasible. The main difficulty with compiled speech was that the voice-recorded words were not flexible, as they needed to be to fit gracefully into sentences. The trouble with synthetic speech was that too much remained to be learned about how to build a speech signal from the ground up. However, we did know, from work on bandwidth compression devices, how to analyze spoken speech into the formant tracks that correspond roughly to paintings for the Pattern Playback. So why not store these formant tracks (from spoken words) instead of storing waveforms? We could then compile these control parameters for the words into sentences and generate ongoing speech with a formant-type synthesizer. All of the component steps were known to work, at least reasonably well, and there were advantages: most importantly, the stress and intonation of the individual words could be manipulated to make them fit the requirements of the sentence; also, the control signals could be stored much more compactly than the waveforms (by a ratio of about 1 to 20), and this would permit digital storage and ready adaptability to computer control of the entire process.

Actually, we did quite a little work on this kind of speech, and generated just enough of it to demonstrate that the process would work and that the speech would be fairly good. But the breakthrough on synthetic speech came at about this time, so work on the compromise method was dropped. In retrospect, this was almost certainly the correct decision, though there are limited applications for which synthesis from stored control signals has real utility (54).

Comparison of Compiled Speech and Speech Synthesized by Rule

By the time Haskins Laboratories had completed its move from New York to New Haven (mid-1970), the output options for a reading maching had been reduced to compiled speech and speech synthesized by rule. We knew how to generate both, but it was not clear which would be the better choice. Comparative trials of compiled speech and speech synthesized by rule were run, using tape recordings of various texts. The twofold purpose of the proposed tests was to learn more about blind persons' expectations concerning reading rates, subject materials, voice quality of the machine speech, overall tolerance of the two types of audible output—and whatever else might be important to them. Conveniently, and very cooperatively, Mr. George Gillispie, Mr. William Kingsley, and their associates at the VA Eastern Blind Rehabilitation Center in West Haven, Connecticut, agreed to seek out volunteers among the blind veterans at their facility to serve as listeners in these field trials.

For reasons of simplicity, the tests were run at the VA Center. A total of 11 subjects participated—all male and most of them in their twenties. There were eight hour-long tests of 27 different texts, each presented to a minimum of two listeners and some to as many as four. The conditions were somewhat informal; the tests took place in any available room with any available volunteers (although the subjects were usually scheduled to avoid conflict with the Center's own programs). The investigator began each session with a brief introduction to the reading machine research and stressed to the listeners that there were no right or wrong answers; that, in fact, no answers as such were needed—only candid comments on anything about the tapes that they cared to mention. It was made clear that the purpose of the tests was to improve the reading machine output. All the subjects took the task very seriously.

Several variables were manipulated in presenting the tapes:

1. Form of machine speech (compiled or synthetic);
2. Speech rate (ten rates within a 70 to 225 word per minute range were used.);
3. Rate manipulation (by simple speed up or by Time-compressed Speech. The Compiled Speech texts were processed by the Center for Rate Controlled Recordings, University of Louisville, Louisville, Kentucky, where they were time-compressed by 60, 65, 70, and 75 percent.);
4. Text (author and topic, i.e., Dickens, Oliver Twist; Steinbeck, Travels with Charley; Pierce, Waves and Messages; sports articles from newspapers; several Saroyan stories.); and
5. Amount of spelling (applicable to compiled speech only).

At the end of each session, the reactions of the blind listeners were collected and summarized. For Compiled Speech, the preferred rates varied with the topic and the author's style. Also, certain topics involved more spelled words than others. (Spelling was deplored by all listeners.) When the speech was time compressed, the preferred rates were in the 159–175 words-per-minute range (i.e., normal speaking rates). However, monologues and dialogues were not enjoyed in this form of speech. The length of speech sample had an effect on the acceptability of the output; for example, half a minute was inadequate for an evaluation (if the topic of the text was unknown and if the tape was begun at a random location in the text), but a minimum of one minute seemed to be sufficient to make an appraisal if the rate was within a reasonable range. The overall evaluation of Compiled Speech was that it was acceptable at some rates in either time-compressed or capstan-speeded form—but was not enjoyable. Spelling was its worst feature. The temporal irregularities were annoying. Listeners doubted that such speech could be tolerated (with or without spelling) over extended periods.

Synthetic Speech (in which no spellings appeared) was quite easily understood with exposures as brief as half a minute and at rates ranging from about 135 to 225 words per minute—that is, from slow to fast speaking rates. Listeners' comments dealt chiefly with the subject matter of the texts, indicating that intelligibility and prosody were acceptable, or at least not distracting. The one aspect that was faulted was what the listeners called its "accent."

Comparisons of these early appraisals of Compiled Speech vs. Synthetic Speech indicated, therefore, that Compiled Speech was effectively rejected and Synthetic Speech was quite enthusiastically accepted.

The Evaluation of Speech Synthesized by Rule

Prospects for Reading Machine Applications. This phase of the Laboratories' reading machine research began in 1970 when the results of comparative tests of compiled speech and speech synthesized by rule from a phonetic input showed the latter to be clearly superior. As has been noted earlier, the main objective of the Laboratories' research program was limited to the development of an acoustic output that would be suitable for use in a reading machine for the blind. The results obtained with SSBR in listening tests had made it clear that this goal was very close at hand. Moreover, in conjunction with research aimed at improving the overall performance of the synthesis method, it was apparent that some effort should now be made to obtain equipment and to prepare software to produce phonetic texts for speech synthesis by rule (SSBR) input directly from the printed page. Not only would such equipment and software be needed in any complete reading machine, but user acceptance tests would almost certainly require quantities of "spoken texts" that could only be generated by a fully automated system.

Thirteen years earlier, at the outset of the VA program, although optical character recognition had been in its infancy it seemed safe to assume that commercial needs for OCR equipment would soon multiply and ensure the rapid development of low-cost multifont optical readers. However, by 1970 it had become apparent that the OCR developments, still essential to the success of reading machines, had not proceeded at the pace expected. While in part this delay may have been due to an underestimation of the difficulty of developing an economically viable multifont print recognizer, it was also in large part due to the unanticipated direction that the commercial demand for character recognition equipment had taken. Over the preceding decade, the need for very fast and accurate numeral-recognition systems designed to read magnetic or optical characters—usually printed but sometimes handwritten—had continued to grow at a rapid pace spurred by demand from the banking and credit card industries. In the broader commercial sector, the development of automated stock and inventory control systems tended to call for the automatic recognition of a larger set of printed characters including alphabetics. However, a pervasive difficulty of all these applications is that accuracy must be maintained for the enlarged character set in environments that typically produce poor print quality and crumpled documents. As a practical compromise, special typefaces were designed specifically to make it possible for OCR machines to function with typewritten materials composed and handled in offices and warehouses. Machines designed to recognize these special typefaces cost in the region of $50,000 and were unable to function satisfactorily on the wide variety of fonts found in newspapers and books. On the fringes of the OCR industry in the early 70's there were, however, a few multifont readers that had been designed and built for military intelligence and other specialized applications in the publishing and information retrieval fields. These more-versatile machines all shared the trait of being about an order of magnitude higher in cost (probably because the development costs were high, electronic components cost more than they do today, and small market demand did not allow these costs to be spread over a large number of units).

Therefore OCR equipment with the versatility needed for application in a reading machine did exist but was not really available. Meanwhile, yet another problem lay in the path between the printed page and the generation of a speech output—finding a suitable algorithm for converting the printed alphabet into phonetic symbols. Here the problem had either a simple solution that imposed practical limits on the size of the vocabulary, or a more complicated and, at the time, unproven solution which promised fewer restrictions on vocabulary size. The former solution was represented by the straightforward dictionary look-up procedure which, for an unrestrained selection of text, would require that the phonetic equivalents of some 500,000 words be stored. The latter solution was represented by a procedure that derives the phonetic form of any English word by analytical means. Work on such an algorithm was underway at MIT by a group headed by Jonathan Allen. This effort led eventually to a complete (computer-based) text-to-speech system called MITalk (4,5). The Allen method involved the decomposition of words into affixes, prefixes, and root forms, then finding their phonetic equivalents and assembling the phonetic spelling. Less storage space seemed likely to be required, despite the need to store the root forms and an exception list. Estimates were that the roughly 20,000 items that had to be stored could be used to generate an English vocabulary many times that size.

Considering the state of development of both OCR equipment and orthographic-to-phonetic conversion capabilities, there appeared in 1970 to be clear grounds for optimism about the practical nature of the task of building a reading machine. But it was also clear that the building of a reading machine would be expensive (at least initially) and that it would be bulky—particularly in view of the fact that the MIT work was at that time unfinished and that letter-to-phoneme recoding by direct dictionary look-up appeared to be the better choice for a prototype machine. Thus, our assessment of the situation during this period led us to the conclusion that the first reading machine would probably be installed either in a VA hospital, on a college campus, or in a large library associated with a dense population center where the level of demand would justify the costs of the equipment and its operation.

Initial Studies of SSBR Performance. With the issue of whether a reading machine could be built no longer in much dispute, the question of whether it would meet the human factors requirements began to dominate. Speech synthesized by rule had been shown (in short passages) to be sufficiently like natural speech to be understood even by groups of naive listeners. Moreover, it was known that comprehension improved with a little listening practice. But exactly how intelligible was the synthetic speech when compared with natural speech? Would listeners tolerate the imperfections of synthetic speech when they were obliged to listen to long passages and recall the content? These were questions that clearly needed to be asked in order to evaluate whether the construction of a pilot reading machine center based on an urban college campus or library could be economically justified. The group at Haskins Laboratories, therefore, turned its attention to a study of the man-machine interface.

An exploratory study of the speech-acceptability issue was carried out with the help of blind students at the University of Connecticut. Ten recorded passages totaling 2.5 hours of listening time were drawn from text books in psychology and psychiatry as well as works of ancient and modern literature. The style of these texts ranged from simple prose to more elaborate syntactic constructions demanding the use of memory for embedded clauses, and requiring analytical thought to extract the content. After listening to SSBR recordings of these passages, the blind students offered their comments, which contained broad agreement on five points:

1. The simple prose was intelligible but the subject matter of the more complicated material was difficult to understand;
2. The stress and intonation aspects of the speech were impressive and helpful;
3. The "nasal" quality of the synthetic speech was unpleasant;
4. The rate of presentation was too slow,[9]
5. Long and often unfamiliar polysyllabic words were recognized with ease, while monosyllables embedded in sequences of other short words were among the items that were most often missed.

Thus, our preliminary probe into listener acceptance pointed to two main areas of concern: (i) The poorer intelligibility of monosyllabic words compared with multisyllabics, and (ii) the interaction of speech intelligibility with the complexity of the subject matter being read. More information was needed about these topics. However, new techniques of inquiry had to be found because the methods of the preliminary study contained two serious weaknesses. The first was that the data were wholly subjective. Thus, while the listeners' comments clearly indicated that synthetic speech was more difficult to understand than natural speech, they did not indicate how much more difficult it was, or provide a quantitative measure of the listeners' performance. Such figures of merit for synthetic speech compared with natural speech would also be needed in gauging the progress made with future improved versions of synthe-

---

[9] The speaking rates varied from 101 to 156 words/minute. The latter is within the norm for human speech but the long silences (2-8 sec) between some sentences in these early recordings made the overall rate seem slow. These unnecessary silences were eliminated in later recordings.

sized speech. The second weakness lay in the volume of reading matter employed in the study. Owing to the fact that the test materials had to be typed in phonetic script by hand, the procedure was sufficiently slow that the volume of reading matter that could be supplied was too small to permit an investigation of practice or fatigue effects.

Development of a Prototype Reading Machine. To overcome the shortcomings of these preliminary studies, we sought to assemble the components of a laboratory prototype reading machine that would produce substantial amounts of synthetic speech more or less automatically. *Figure 11* provides a diagram of the Laboratories' text-to-speech prototype processor. An OCR system (purchased with money granted to the Laboratories by The Seeing Eye, Inc.) served as the primary input stage of the text processor. This OCR system, manufactured by the Cognitronics Corporation, read upper-and-lower-case typescript in an OCR-A typefont that could be generated on a regular IBM "golfball" typewriter. Thus, although special input text was needed, it could be prepared by ordinary typists. Moreover, these typists could do their work at locations remote from the Laboratories and at rates that were much faster than those achieved by even the most skillful phonetic typists. In addition, the use of typewritten texts saved computer time because, unlike the preparation of phonetic texts, the typing could be done independently of the computer.

The typed page was then "read" by the OCR device, giving a sequence of machine-readable alphabetic char-

FIGURE 11
Operation of the Prototype Reading Machine. The system was employed to generate substantial amounts of speech synthesized by rule for use by students and in evaluation studies.

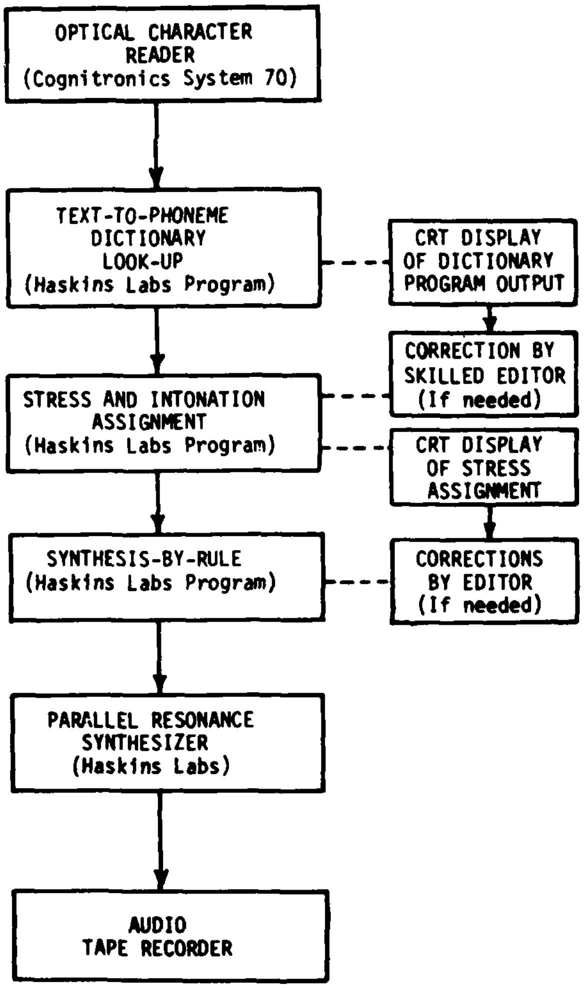

Machine will accept input in page form and will recognize OCR-A typefont. Maximum operating rates are 30 documents/min, 200 characters/sec. Output medium, digital magnetic tape. Incorporates on-line correction facility.

Computer program containing stored phonemic transliterations and grammatical categories of more than 150,000 English words. Finds phoneme equivalents of each text word and displays output for editorial checking.

Inserts stress and intonation instructions primarily on the basis of lexical rules. Output can also be checked by an editor.

Computes pitch amplitude and formant frequencies of desired acoustic output on the basis of a system of rules.

Special purpose device designed to generate larynx-like waveform or sibilant noise which is modulated by a system of three parallel formant frequency resonators to create intelligible speech. Speaking rate adjustable within wide limits.

A standard audio frequency tape recorder records synthetic speech on 1/4 inch magnetic tape which is conveyed to the researchers at the University.

acters. These were converted, at stage two of the process, into a sequence of phonetic symbols and stress marks by direct dictionary lookup, using a phonetic dictionary that was made available to us by the Speech Communications Research Laboratory, Santa Barbara, Calif., and installed in the Laboratories' computer by our colleague, Dr. George Sholes. This dictionary contained the phonetic equivalents of more than 150,000 English words with their syllabic stresses marked according to the three-level system employed by the SSBR program. A CRT monitor provided the operator with an opportunity to examine the output of the lookup procedure. Any words not found in the dictionary were displayed on the screen spelled in orthographic form so that the operator could intervene and supply the missing phonetic equivalents. Following dictionary lookup, a third stage was responsible for modifying the lexically-defined stress and inserting intonation marks on the basis of a system of rules applied to the punctuation of the original typescript. At the fourth stage of the process, the phonetic string became the input to the SSBR computer program and was converted into fifteen parallel streams of digital control signals for the specially built terminal analogue speech synthesizer that was mentioned earlier. The speech was recorded on magnetic tape for use in evaluation trials.

In short, this prototype reading machine would do, in the laboratory environment, everything that a "real" reading machine would do in a library environment, with one exception, namely, that it required typewritten material as its input. This was a limitation that could readily have been eliminated, though at rental costs for a multifont OCR machine which could not be justified for the experimental use we envisaged, which was to supply recorded tapes for the blind student subjects at the University of Connecticut.

Modified Rhyme Test. In parallel with work on a prototype reading machine, work was started on measuring the intelligibility of synthetic monosyllables (49). The first experiment employed a version of Fairbanks' Rhyme Test (21) which is known as the Modified Rhyme Test, or MRT (32).

The MRT involved the use of 300 monosyllabic words, grouped together into batches of six which rhymed with one another. The test was prepared in both synthetic and natural speech versions and was administered in closed form. Listeners were provided with typewritten lists of the rhyming words, and their task was to listen to one presented word (selected at random) from each six-word group shown and to identify it by circling in pencil the item which most closely resembled the word that they had heard. Thirty sighted students from the University of Connecticut were engaged as listeners. The overall intelligibility scores were found to be 92.5 percent for synthetic speech and 97.3 percent for natural speech—the difference indicating the margin for improvement. The latter figure agreed quite well with data obtained by other workers on natural speech. Word initial /v/ and final /r/ in particular—as well as the labial, labiodental, and dental fricatives in any position—were the least intelligible phones.

The MRT was a useful test in that it provided for the first time a measure of comparative performance for synthetic speech with respect to an ideal level—natural speech. However, the test itself proved to have a number of deficiencies that revealed themselves only after the results had been analyzed. For example, the extrapolation of many of the results to normal English speech is difficult because of intrinsic limitations of the MRT test itself: The individual consonants do not appear an equal number of times, nor in all vowel environments, nor in an appropriate balance of initial and final positions. Thus, the infrequent occurrence of some phones, combined with the fact that the response data exhibited a marked learning effect, might have contributed to low intelligibility scores for those phones. Moreover, the fact that the words were presented in isolation made the speech unnatural. Therefore, we sought to devise a new test in which the phonetic constituents would appear in varied environments with relative frequencies that were more similar to those found in English.

Test Results with Nonsense Sentences were obtained from a testing procedure designed to meet the above objectives. The test obliged the listeners to recall words placed in sentences that were syntactically normal but meaningless. It was dubbed the Syntactically Normal Sentence Test (SNST).

The test employed 126 nouns, 63 adjectives, and 63 past-tense verbs—all monosyllables selected from the first 2000 most frequently used words in English (50). Words from each of these categories were randomly selected to create 200 meaningless sentences of the form "The (adjective) (noun) (verb) the (noun)." These sentences were recorded in both naturally-spoken and synthesized speech as groups of 50 sentences, with a 10-second interval between the sentences. During this interval, the 32 sighted listeners were required to write down the sentence they had just heard, using ordinary English spelling. Because the test was open in form and the sentences lacked semantic context cues, the task of transcribing them proved to be considerably more difficult than responding to the MRT, even though the naturally spoken sentences were properly articulated and the synthetic sentences had coarticulation built into them.

The response errors were analyzed into two main classes:

1. Phoneme errors, which could be substitutions of vowels or consonants for other phonemes, (e.g., "fat" for "sat," "sat" for "sad," etc.); or insertions of one or two phonemes in an otherwise correctly reported word (e.g., "paved" for "paid"); or deletions, which are the omission of vowels or consonants in otherwise correctly reported words.

(2.) Word errors, which could be words left unreported (i.e., omitted words) and transpositions, or words which were correctly identified but in the wrong position within the nonsense sentence. Word location within the sentence was also examined as a possible factor in the number of errors made.

We will pass over the detailed results of our analysis and remark on two general but important observations. First, the results from the SNST demonstrated that the task of recalling sentences in which the words are coarticulated (but lack any semantic content) provides quite a sensitive test of synthetic speech performance. Second, the lowest number of recall errors on synthetic speech was made on adjectives (occupying the initial test word position) whereas the highest number of errors was made on nouns (those in the second-word position). This error pattern contrasted markedly with that found in natural speech where the verb (third test word position) proved to be the most misreported word. The reasons for this observation were not discovered by further analysis of the data, but the errors indicated the existence of a trading effect between memory load (known to vary with serial position) and the extra attention (or cognitive effort) needed to identify synthetic speech sounds.

In summary, a comparison of the results of the MRT and the SNST showed that the margin of difference between listening performance for synthetic speech and natural speech increased significantly for the more demanding SNST. The average error rate for natural speech in the SNST was about 5 percent compared with 3 percent in the MRT, while for synthetic speech it was 22 percent on the sentence test compared with 8 percent on the isolated MRT words. It must be noted, however, that the figures for the SNST include errors of all kinds ranging from words totally omitted to minor phonetic errors that may well have been corrected had the words appeared in meaningful contexts. Also, the reporting requirements were different: the MRT used a closed response set while the SNST demanded open responses. All of these considerations would lead one to expect higher error rates for the sentence test than for the isolated word test. The important point is that, as the task gets harder, the errors increase at a faster rate for synthetic speech than for natural speech. Thus, the results demonstrated both the sensitivity of the testing procedure and the need to focus further attention on the improvement of methods of synthesis.

Studies of the Comprehensibility of Synthetic Speech. While analytical studies typified by the MRT and the SNST provided useful information about synthetic speech on a microscopic level, there was an evident need to examine it on the macroscopic scale, i.e., to ask about overall performance on longer passages. It was already apparent that synthesized speech was sufficiently intelligible to enable information to be conveyed from the printed page to an untrained listener at speeds in excess of those offered by any existing reading aids for the blind. An exploration of user acceptability and performance issues was fully warranted.

The first plan for a field evaluation of synthetic speech using the Laboratories' prototype reading system was outlined in a paper by Nye, Hankins, Rand, Mattingly, and Cooper (48) published in 1973 and given in detail in a proposal submitted to the U.S. Office of Education, Bureau of Education for the Handicapped (BEH). The plan called for a combined effort by the University of Connecticut and Haskins Laboratories to provide a pilot reading machine service to a group of about 20 blind students at the University of Connecticut. Texts required by the blind students in their regular courses were to be prepared in typewritten form and converted into synthetic speech using the Haskins Prototype Reader; the texts were also to be converted into page-embossed Braille at the University of Connecticut Computation Center using the MIT DOTSYS III Braille Translation program. The goals of the plan were to obtain data on the usefulness of such a service to blind students, and on the usefulness of Braille versus synthetic-speech materials. This was to have been achieved by determining how much actual use was being made of the services and the relative proportion of the demand for synthetic speech and Braille. The proposal was approved, but because at that time there were budget uncertainties for many Federal agencies, the promised funding was repeatedly delayed until the BEH then administratively eliminated the project. The opportunity to carry out the plan was lost.

Meanwhile, with support from the VA, studies of listening comprehension with synthetic speech from the Prototype Reader were continuing on a more modest scale (51). The testing technique employed, as a measure of comprehensibility, the time taken to answer questions on the contents of synthesized and naturally spoken texts.

Two equally difficult passages of text were selected from a standardized reading test, each approximately 12 minutes in duration. One text was recorded, either in synthetic speech from a then-current version of the SSBR algorithm or in speech from an older synthesis program, while the other text was recorded in natural speech. The synthesized speech was generated either from a hand-edited phonetic script or from a phonetic text derived automatically (i.e., without editorial intervention) from orthographic input. After a single listening to one of the texts, a multiple-choice 14-item questionnaire was administered to each listener, and the time taken to provide as many answers as the listener could recall was noted. The listeners were then allowed to replay all or parts of the text as many times as was necessary to allow them to fully complete the questionnaire. This additional time was also noted.

The results showed that there were no significant differences between synthetic and natural speech as to the aggregate times taken to answer questions after hearing the passages for the first time. However, the listeners did take a significant 1.75 minutes longer to answer the remaining questions relating to synthetic speech passages during the second listening opportunity. The results obtained with different synthesis algorithms indicated that listeners performed somewhat better with the newer SSBR algorithm than with its predecessor, and that their performances with the hand-edited text produced only a slight improvement over that produced entirely by machine.

In conjunction with that comprehension study, a paired-comparison preference test was run in which each listener selected his preferred form of synthetic speech from all possible contrasting pairs. The test results showed that the various speech outputs ranked in the same order on the preference scale as they had in the comprehension study. This suggested that there is a strong relationship between listener preference and listener performance and, therefore, the greater the extent to which the speech can be made to sound natural the greater is the gain to be expected in listener performance.

The same comprehension test was used on a later occasion (14) to contrast performance on easy versus difficult texts. Two new texts of greater difficulty were chosen in addition to the two original (easy) texts. The two additional passages covered technical subject matter from the fields of anthropology and geology. The two were also of roughly equal difficulty. Recordings were made of each text "spoken" either in synthetic speech or by a human speaker at the same rate of delivery. The text durations ranged from 12–14 min. Timing observations obtained while the listeners answered the questionnaire showed that on average they required 7.5 min for human speech and 11.7 min for synthetic speech. As expected, the answering times for both natural speech and synthetic speech increased with text difficulty, and, more significantly, the differences in time for natural and synthetic speech increased with text difficulty. Thus, the results confirmed the impressions of some of the early listeners to synthetic speech, namely, that the difficulty of understanding the content of a passage of text does increase more rapidly with the complexity of that content when synthetic speech replaces natural speech.

A Pilot Reading Machine Service to Blind Veterans

The Laboratories' contact with staff at the VA Eastern Blind Rehabilitation Center at West Haven, Connecticut, was reestablished for another study of listener reactions to computer-generated speech. On this occasion, at the suggestion of veterans in residence at the Center, the daily columns of Ann Landers were converted into synthetic speech, recorded and sent to West Haven for listening and responses.

The original texts were obtained from the local newspaper publisher in the form of Teletypesetter tapes and read into the Laboratories' computer with a specially modified reader. However, variations in tape conformation introduced by the different machines that punched them caused numerous errors and subsequent delays while corrections were made. As a result, only 1.5 hours or so of synthetic speech were generated during the project—less than had been anticipated. Nevertheless, the project was valuable for two reasons. First, it provided an opportunity to evaluate duration as a supplemental cue for stress. Second, the informal style of Ann Landers' column involved a number of syntactic structures that the stress assignment algorithm could not ade- quately handle. Thus, in some cases the sentences were ambiguous unless the main stress was applied to just the right word, so corrections had to be made by hand. In other cases, typographical devices such as boldface printing were used instead of punctuation. This also required intervention since the dictionary lookup program made no distinction between typefaces and had to depend entirely on formal punctuation to assign stress and intonation. Performance was therefore liable to be erratic when the Prototype Reading Machine was operating in automatic mode.

William De l'Aune, Ph.D., and the research staff of the Blindness Center conducted the listening sessions in an informal atmosphere. However, despite the best efforts of the VA staff, the test procedures did not gain the wholehearted cooperation of those patients who were in residence at the time. The patients seemed reticent, possibly because they were uncertain as to whether their own intellectual abilities, rather than the performances of the speech passages, were really what was being examined. Consequently, they showed a distinct preference for making general comments about the quality of the speech rather than answering questions that would indicate how much they had understood. The results were, for these reasons, somewhat disappointing.

Improvements in Speech Synthesis by Rule

The initial development of a new SSBR program was perhaps the most important work performed in the final years of the Laboratories' VA-supported research. This program made a significant departure from principles embodied in the earlier program by abandoning the use of a hardware synthesizer for final speech output and by placing greater emphasis on the syllable as the unit of production.

Although the practical advantages of real-time synthesis were highly valued during much of the earlier work, the difficulty of modifying the hardware (whose speed of response made real-time synthesis possible) demonstrated its inflexibility for research purposes—particularly when the drive to improve speech quality made the need for synthesizer adjustments more acute. Therefore, in later work, algorithms similar to those employed by Klatt (37) were employed in a software synthesizer programmed in FORTRAN on the Laboratories' PDP-11/45 and VAX computers to simulate the sound generators and resonators of the original hardware. The chief advantage of a software synthesizer is that the components can be easily rearranged so that any desired synthesizer structure can be assembled. This flexibility allows the experimenter, within minutes, to make design modifications that would take many hours, were they to be attempted in hardware. There is a penalty, however, in generating the speech: a software synthesizer introduces an unavoidable delay of several seconds while the program computes the speech waveform.

The present SSBR program (also written in FORTRAN) is called SYLSYN (for Syllable Synthesis). Organized in terms of phonetic syllables, the program provides a more direct representation of coarticulatory effects in their spectral and temporal aspects than was possible with the earlier SSBR programs, which were based on phonetic segments. The input to the program is a transcription of syllable features. The rules are stored in a disc file which is accessed by a special subroutine during synthesis. These rules relate the feature transcription to a specification, as a function of time, of each of the various influences that shape the syllable. In conjunction with target values specified in the rules, these influence functions are used to determine the parameter values of the software synthesizer which, in turn, produces the digital waveform that is converted into an audio signal. So, by editing the rules file, the user can modify not only the rules for synthesis but also the characteristics of the synthesizer itself.

SUBSEQUENT DEVELOPMENTS in the EVOLUTION of READING MACHINES

The research project on Audio Outputs of Reading Machines for the Blind at Haskins Laboratories formally came to an end in September, 1978, while work on completing the new SYLSYN program and other related research was still underway. The end to the project was the consequence of a policy decision made by the VA to withdraw its support of further research in this area. The VA had funded a wide variety of short- and long-range reading machine research projects in different institutions over a period of more than 20 years. Having begun to fund research on the development of a speech output at a time when the building of a talking machine was a highly speculative venture, the VA had been consistent in its concern for the endeavor by promoting conferences and the publication of results. By 1978, however, those who had followed recent developments could hardly have regarded the VA's withdrawal of research support with surprise and, at the Laboratories, the news was not entirely unexpected.

Starting in the early 1970's, several technical developments and legislative enactments of importance to the blind and other handicapped persons combined to create a climate of opportunity for entrepreneurs interested in providing devices and services for the disabled. A very few years after the development of Mattingly's successful SSBR program using an input of phonetic symbols and intonation marks, a synthesizer requiring similiar input, implemented in compact hardware form, was offered commercially by the Federal Screw Works with the name of VOTRAX. At about the same time, Telesensory Systems, Inc., with Federal assistance, made its first successful entry into the marketplace with a reading aid for the blind that used a tactile output. The supply of such products and the effort to develop them received an additional impetus from the Rehabilitation Act of 1973 (which was to be further enlarged by major additions enacted into law in 1978). Then, in 1974, Kurzweil Computer Products, Inc., began a vigorous effort to marshal a combination of Federal and private support for the development of a personal reading machine based on an optical recognizer (recently built by that company), the VOTRAX synthesizer, and existing knowledge about speech synthesis by rule. Finally, the technical trends of the 70's towards sharply lower costs for integrated electronic circuitry of steadily escalating complexity, culminating by 1976 in the ready availability of microprocessors, fueled an atmosphere of rising technical expectations among the handicapped as well as the desire of engineers to meet those expectations.

Thus, it was easy to foresee the likelihood of a swing away from research and toward an effort to apply the available technology and existing knowledge that research efforts over the years had accumulated. Whether this knowledge will prove sufficient to permit current reading machines to find a significant number of useful applications is still unknown.

What can be stated with assurance, however, is that the problem of machine-to-man communication as encountered by the blind reader is still far from being completely solved. Despite the great advances that have been made since the invention of sound producing reading machines at the beginning of this century, the intelligibility and comprehensibility of the speech now being generated is still in need of further improvement. All speech synthesized by rule from text, whether produced in well equipped laboratories or produced by commercially available reading machines, is unmistakably unnatural. Its articulation is imprecise and its intonation and syllabic tempo are faulty. Subject matter is more difficult to understand when spoken synthetically than it would be if spoken naturally. With much still to be done, the research of the Laboratories into synthetic speech is continuing—currently with support provided by the National Science Foundation. With this support we hope to continue to make contributions that will benefit the blind reader.

THE READING MACHINE PROBLEM IN RETROSPECT

The case history we have recounted spans nearly four decades and draws upon the experience of almost as many earlier decades. The account deals not only with events over this span of years but also with changing ideas about the nature of the reading machine problem. When Haskins Laboratories first encountered that problem in the mid-1940s, the brilliant technical achievements of World War II seemed to offer the early prospect of a personal and portable reading machine. But many facets of the problem, and of its solution, were not at all foreseen. It is only now, 40 years later, that this expectation is nearing fulfillment.

One thing not foreseen was the inability of listeners to cope with the arbitrary letter-by-letter sounds that could be produced by simple mechanisms. An aspect of the solution that was unforeseen until the mid-fifties was that machines might someday be able to talk, as well as read, like people; nor was it foreseen until scarcely a decade ago that there would be any possibility of such sophisticated performances by mechanisms of very modest size and cost.

Why has it taken so long for all this to happen? For one thing, we often see—and come to expect—that technology leaps ahead of its scientific base, and so seems to make sudden great strides. But it can leap only so far, and therefore progresses, on the average, only as fast as does the underlying science. Moreover, that science, as it concerns reading machines, has had only meager support over most of its course. In the present case, although a generous share of the research budget of the VA's Prosthetic and Sensory Aids Service was provided, the level of funding was often the limiting factor in pressing ahead with the research; indeed, a project of such complexity could hardly have been carried forward at all had it not been able to draw on the equipment and technical skills provided by parallel research on speech that the Laboratories were doing for other Federal agencies (Department of Defense, National Institutes of Health, and National Science Foundation).

But the pace of technology itself also set limits on the evolution of reading machines. Most of the time, it was a matter of asking the current technology to deal with tasks that were at the limits of what was possible without excessive cost; often, this pointed the work toward what was then possible rather than what was truly desirable, and so led to effort along lines that had to be abandoned only a few years later. This was true, for example, of all the construction work done on an Interim Word Reading Machine; it was true also of the work on speech synthesis by rule, which languished for seeming lack of promise until computers became available as Laboratory devices. Likewise, the very same explosive developments in microelectronics that have made possible today's compact text-to-speech reading machines also made suddenly obsolete the carefully planned efforts to set up a Reader Service Center for blind users.

Perhaps we should ask, not why progress has been slow, but how it happened at all. The problems to be solved were indeed difficult and time consuming. Few industrial research projects could have survived so long a maturing; the time scale to which they are geared is usually measured in years, not decades. Even Government support for research can cope with such long-term projects only when there are individuals in Government who have both the vision and the persistence to defend the undertaking.

Basic research is plainly essential to the development of devices such as reading machines for the blind. Only basic research could have led to speech synthesis by rule and to the demonstration that SSBR was the right choice as output signal for a high-performance reading machine. But is basic research sufficient to solve the entire problem? Probably not, and for a variety of reasons. For one thing, the kind of people and the kind of organizations that deal naturally and well with basic research do not usually have the temperament or skills to handle the entrepreneurial job of bringing a device to market. The Government, for its part, lacks effective mechanisms for bridging the gap between the research it supports and the finished devices that embody that research; that is to say, between research and procurement—both of which the Government does do—there is much development and testing that is done only by private industry, when it is done at all. Fortunately for the users of reading machines now and in the future, there has been this kind of entrepreneurial effort ■

Acknowledgement: The authors would like to thank Eugene F. Murphy, Ph.D., recently retired from the Veterans *Administration, for* his vision and his confidence that better understanding would lead to a solution of the reading machine problem. We also appreciate the VA's support of this research, which spanned a period of two decades.

REFERENCES

1. Abma JS: The Battelle Aural Reading Device for the Blind. In Human Factors in Technology (chapter 19, pp. 315–325) E. Bennett, J. Degan & J. Spiegel (Eds) New York; McGraw Hill, 1963.
2. d'Albe EE: The optophone: an instrument for reading by ear. Nature, Lond., 105:295–296, 1920.
3. Allen J: Electronic aids for the severely visually handicapped. CRC Crit Rev Bioengng 1:139–167, 1971.
4. Allen J: Synthesis of speech from unrestricted text. Proc IEEE 64:433–442, 1976.
5. Allen J:Linguistic-based algorithms offer practical text-to-speech systems. Speech Technol 1:12–16, 1981.
6. Borst JM: The use of spectrograms for speech analysis and synthesis. J Audio Engng Soc 4:14–23, 1956.
7. Borst JM & Cooper FS: Speech research devices based on a channel vocoder. J Acoust Soc Amer 29:777(A), 1957.
8. Cooper FS & Zahl PA: Research on Guidance Devices and Reading Machines for the Blind: A Final Report of Work Done at the Haskins Laboratories between February 15, 1944 and December 31, 1947 under the auspices of the Committee on Sensory Devices, The National Academy of Sciences (Appendix W, p.8). New York, Haskins Laboratories, 1947.
9. Cooper FS: Research on reading machines for the blind. In Blindness: Modern Approaches to the Unseen Environment (chapter 32, pp.512–543) P. Zahl (Ed). New Jersey, Princeton University Press, 1950 (Reprinted 1963 & 1973. New York, Hafner Press).
10. Cooper FS: Spectrum analysis. J. Acoust Soc Amer 22: 761–762, 1950.
11. Cooper FS, Liberman AM & Borst JM: The interconversion of audible and visible patterns as a basis for research in the perception of speech. Proc Nat Acad Sci Wash 37:318–325, 1951.
12. Cooper FS, Liberman AM, Borst JM & Gertsman LJ: Some experiments on the perception of synthetic speech. J Acoust Soc Amer 24:597–606, 1952.
13. Cooper FS, Liberman AM, Harris KS & Grubb PM: Some input-output relations observed in experiments on the perception of speech. Proc 2nd Intern Cong on Cybernetics, Namur, Belgium, 930–941, 1958.
14. Cooper FS, Liberman AM, Gaitenby JH, Mattingly IG, Nye PW & Sholes GW: Research on audible outputs of reading machines for the blind. Bull Prosth Res BPR 10-23, 331–335, Spring 1975.
15. Corner GW: The committee on sensory devices. In Blindness: Modern Approaches to the Unseen Environment (chapter 28, pp.431–442) P. Zahl (Ed). New Jersey, Princeton University Press, 1950 (Reprinted 1963 & 1973. New York, Hafner Press).
16. Delattre PC. Liberman AM & Cooper FS: Acoustic loci and transitional cues for consonants. J Acoust Soc Amer 27:769–773, 1955.
17. Dewey G: Relative Frequency of English Speech Sounds. Cambridge, Mass, Harvard University Press, 1950.
18. Dudley H: The vocoder. Bell Labs Record 17:122–126, 1939.
19. Dudley H, Riesz RR & Watkins SA: A synthetic speaker. J Franklin Institute 227:739–764, 1939.
20. Dudley H: The carrier nature of speech. Bell Sys Tech J 19:495–515, 1940.
21. Fairbanks G: Test of phonemic differentiation: the Rhyme Test. J Acoust Soc Amer 30:596–600, 1958.
22. Fant G: Speech communication research. IVA (Sweden) 24:331–337, 1953.
23. Fant CGM: Modern Instruments and methods for acoustic studies of speech. Proc Eighth Intern Congr of Linguistics (Oslo): 282–358, 1958. (This report deals also with a num-

ber of other synthesizers, including POVO and DAVO (MIT) and Voback (Haskins Labs)).

24. Fant G & Martony J: Speech synthesis. Speech Transmission Laboratory, Stockholm, QPSR 2:16–18 & 18–24, 1962.
25. Fant G, Mårtony J, Rengman U & Risberg A: OVE II synthesis strategy. Proc. Speech Comm Sem Stockholm II: Paper F5, 1963.
26. Farrell G: Avenues of communication. In Blindness: Modern Approaches to the Unseen Environment (chapter 21, pp. 313–345) P. Zahl (Ed). New Jersey, Princeton University Press, 1950 (Reprinted 1963 & 1973. New York, Hafner Press).
27. Fender DH: Reading machines for blind people. J Vis Impair and Blindness 77:75–85, 1983.
28. Freiberger H & Murphy EF: Reading machines for the blind. IRE Trans Prof Group Hum Fac Electron HFE-2:8–19, 1961.
29. Freiberger H & Murphy EF: Reading devices for the blind: an overview. In Human Factors in Technology (chapter 18, pp.299–314) E. Bennett, J. Degan & J. Spiegel (Eds). New York, McGraw Hill, 1963.
30. Gaitenby JH: The elastic word. Haskins Laboratories Status Report on Speech Research SR-2:3.1–3.12, 1965.
31. Holmes JN, Mattingly IG & Shearme JN: Speech synthesis by rule. Language and Speech 7:127–143, 1964.
32. House AS, Williams CE, Hecker MHL & Kryter KD: Articulation testing methods: consonantal differentiation with a closed-response set. J Acoust Soc Amer 37:158–166, 1965.
33. Ingemann F: Speech synthesis by rule. J Acoust Soc Amer 29:1255, 1957.
34. Irwin RB: The Talking Book. In Blindness: Modern Approaches to the Unseen Environment (chapter 22, pp.346–352) P. Zahl (Ed). New Jersey, Princeton University Press, 1950 (Reprinted 1963 & 1973, New York, Hafner Press).
35. Joos M: Acoustic Phonetics. Lang Monogr 23, Language, 24:2. Suppl., 1948.
36. Kelly JL & Gerstman LJ: An artificial talker driven from phonetic input. J Acoust Soc Amer 33:835, 1961.
37. Klatt DH: Software for a cascade/parallel formant synthesizer. J Acoust Soc Amer 67:971–995, 1980.
38. Lawrence W: The Synthesis of Speech from Signals which have a Low Information Rate. In Communication Theory, (chapter 34, pp.460–471) W. Jackson (Ed). London, Butterworths, 1953.
39. Liberman AM, Delattre PC, Cooper FS & Gerstman LJ: The role of consonant-vowel transitions in the perception of stop and nasal consonants. Psychol Monographs 68, 1954.
40. Liberman AM: Some results of research on speech perception. J Acoust Soc Amer 29:117–123, 1957.
41. Liberman AM, Ingemann F, Lisker L, Delattre PC & Cooper FS: Minimal rules for synthesizing speech. J Acoust Soc Amer 31:1490–1499, 1959.
42. Mann RW: Technology and Human Rehabilitation: Prostheses for Sensory Rehabilitation and/or Sensory Substitution. In Advances in Biomedical Engineering vol. 4 (pp.209–353) R. Kenedi (Ed). New York, Academic Press, 1974.
43. Mattingly IG: Synthesis by Rule of General American English. Ph. D dissertation, Yale University. (Issued as a supplement to Haskins Laboratories Status Report on Speech Research.) 1968.
44. Metfessel MF: Experimental studies of human factors in perception and learning of spelled speech. Proc Int Congr on Technol and Blindness (pp.305–308) L. Clark (Ed). New York, American Foundation for the Blind, 1963.
45. Naumburg RE: A bookprint reader for the blind. Sci Amer 145:113, 1931.
46. Nye PW: Reading aids for blind people—a survey of progress with the technological and human problems. Med Electron Biol Engng 2:247–264, 1964.
47. Nye PW & Bliss JC: Sensory aids for the blind: a challenging problem with lessons for the future. Proc IEEE 58:1878–1898, 1970.
48. Nye, PW, Hankins JD, Rand T, Mattingly IG & Cooper FS: A plan for the field evaluation of an automated reading system for the blind. IEEE Trans Audio Electroacoust AU-21:265–268, 1973.
49. Nye PW & Gaitenby JH: Consonant intelligibility in synthetic speech and in a natural speech control (Modified Rhyme Test results). Haskins Laboratories Status Report on Speech Research SR-33:77–91, 1973.
50. Nye PW & Gaitenby JH: The intelligibility of synthetic monosyllabic words in short, syntactically normal sentences. Haskins Laboratories Status Report on Speech Research SR-37/38:169–190, 1974.
51. Nye PW, Ingemann F & Donald L: Synthetic speech comprehension: a comparison of listener performances with and preferences among different speech forms. Haskins Laboratories Status Report on Speech Research SR-41:117–126, 1975.
52. Potter RK: Introduction to technical discussions of sound portrayal. J Acoust Soc Amer 18:1–3, 1946. (See also the five related articles that follow this introduction.)
53. Potter RK, Kopp GA & Green HC: Visible Speech. New York: van Nostrand, 1947.
54. Rabiner LR, Schafer RW & Flanagan JL: Computer synthesis of speech by concatenation of formant-coded words. Bell Sys Techn J 50:1541–1558, 1971.
55. Rosen G: Dynamic analog speech synthesizer. J Acoust Soc Amer 30:201–209, 1958.
56. Smith GC & Mauch HA: The development of a reading machine for the blind: summary report. Bull Prosth Res BPR 10-6, 98–124, Fall 1966.
57. Stowe AN & Hampton DB: Speech synthesis with prerecorded syllables and words. J Acoust Soc Amer 33:810–811, 1961.
58. Studdert-Kennedy M & Cooper FS: High-Performance Reading Machines for the Blind: Psychological Problems, Technological Problems and Status. In Sensory Devices for the Blind (pp.317–342), R. Dufton (Ed), London, St Dunstans, 1966.
59. Thorndyke EL & Lorge I: A Teacher's Word Book of 30,000 Words. New York; Teachers College Press, 1968.
60. Turine V de: Photophonic books for the blind. L'Eclairage Electrique 31:16–19, 1902.

ABSTRACTS OF RECENT ARTICLES

The following articles have been abstracted by Joan E. Edelstein, R.P.T., who is a Senior Research Scientist, New York University Post-Graduate Medical School, Prosthetics and Orthotics, 317 East 34th Street, New York, N.Y. 10016.

For this issue of the Journal of Rehab R&D Joan Edelstein selected articles in all phases of rehabilitation, from the journals listed below. Accordingly you will find:

Upper limb prosthetics articles	1
Upper limb orthotics	4
Lower limb prosthetics	6
Lower limb orthotics	4
Gait analysis	2
General	5

These have been drawn from:

Prosthetics and Orthotics International	3
American Journal of Occupational Therapy	1
Physical Therapy	1
Archives of Physical Medicine and Rehabilitation	6
Orthotics and Prosthetics	4
Journal of Bone and Joint Surgery	4
American Journal of Physical Medicine	2
Acta Orthopaedica Scandinavica	1

Functional Comparison of Upper Extremity Amputees Using Myoelectric and Conventional Prostheses: R. B. Stein and M. Walley (Department of Physiology, University of Alberta, Edmonton, Canada) Archives of Physical Medicine and Rehabilitation 64:243–248, June 1983.

Twenty users of the Otto Bock myoelectric hand were compared with 16 users of cable-controlled hooks. Three of each group were above-elbow amputees. The hand tested is a relatively slow model, intended to conserve energy and allow a lighter prosthesis to be fitted. Faster myoelectric hands are available, resulting from less filtering of the signal or a faster motor, which may produce less reliable operation. Extensive personal, medical, and prosthetic histories were collected, including an activities of daily living questionnaire. The amputees then executed tasks using the prosthesis and their normal arm, including picking up small and heavy objects, simulated feeding, and stacking checkers. Strength of cylindrical grasp, gross dexterity, endurance, and maximum terminal device opening distance were also tested. Sixty per cent of the group had traumatic amputation; 55 percent of the population are male. Conventional prosthesis users had them an average twelve years, compared with an average 1.4 years for myoelectric wear, but there was not significant correlation between the period since fitting, and functional measures. Conventional wearers used the prosthesis an average of 14 hours daily, compared with 9.6 hours for myoelectric wearers. All myoelectric wearers had previous experience with conventional prostheses. Myoelectric wearers scored higher on tests of functional excursion, expecially the ability to open the terminal device behind the back and neck. The time needed to complete tasks with a myoelectric prosthesis was approximately twice that with a conventional prosthesis; the conventional wearers required nearly 2.5 times as long to complete tasks, as compared with the normal arm. No significant difference was found between maximum weights which could be grasped. All conventional wearers were able to continue tasks for ten minutes, but a fifth of the myoelectric wearers became fatigued. Most below-elbow amputees preferred the myoelectric prosthesis because of improved functional range with the Muenster fitting and better appearance. Above-elbow amputees were much less accepting of either type of prosthesis.

Knee Flexion During Stance as a Determinant of Inefficient Walking: David Winter (Department of Kinesiology, University of Waterloo, Waterloo, Ontario, Canada) Physical Therapy 63:331–337, March 1983.

Seven young adults without gait problems walked on a walkway at three voluntarily controlled cadences: slow, natural, and fast. They had reflective markers attached to several anatomic landmarks and wore their own footwear. A tracking cart, carrying television and cinematographic cameras, followed each individual. Background wall markers gave a reference so that body coordinates could be scaled as absolute coordinates. Using displacement and linear and angular velocities of body segments, the potential and kinetic energies were calculated and summed to give the total energy of each segment. Summation of all segmental energies yielded the total body energy, showing increases when net positive work was done by muscles, and decreases when negative work was done as muscles absorbed energy. Over a given stride at constant speed, the body returns to the same energy level once; positive work equals negative work; the sum is called internal work. The work cost of walking, defined as work per body mass per distance walked, was correlated with maximum knee flexion during stance.

A significant positive correlation exists between energy cost and maximum knee flexion, but not between velocity and flexion, nor between cadence and flexion. The prediction of Saunders that stiff-legged weight-bearing is more energy consuming than normal flexed knee stance does not appear to be true. As knee flexion increased to the normal value, knee, hip, and ankle extensor muscles contracted to limit knee flexion; such activity increases the metabolic cost of walking and quintuples the bone-on-bone forces at the knee and hip, as compared with stiff kneed gait.

Prosthetic Fitting in Lower Limb Amputees: J. Steen Jensen, T Mandrup-Poulsen, and M. Krasnik (Department of Orthopaedic Surgery, Gentofte Hospital, University of Copenhagen, Hellerup, Denmark) Acta Orthopaedica Scandinavica 54:101–103, 1983.

Amputation of 320 limbs was performed in 310 arteriosclerotic patients with a mean age of 70 years. Hospital mortality was 18 per cent, with average stay of 68 days. Of the survivors, 116 were above-knee amputees, 48 through-knee, and 101 below-knee amputees. Prosthetic fitting was attempted in all who had previous walking capacity. Fifty-six per cent of the entire group were able to walk with a prosthesis. The result is significantly related to age and level of amputation. Sixty-eight per cent of through-knee and below-knee amputees used prostheses well. Only 9 per cent of patients admitted from nursing homes were successfully fitted. Success rates of 77 per cent were achieved for those discharged to their home, and 76 per cent for those sent to a rehabilitation institution. The most successful amputation level in relation to fitting was through-knee, with a rate of 97 per cent, as compared with 83 per cent for below-knee and 61 per cent in above-knee. The risk of death during hospitalization is highest for above-knee, and equal for through- and below-knee. Through-knee amputation should be considered an alternative to the below-knee level in feeble patients with poor muscular balance, as most can walk on a prosthesis, if necessary with a knee lock. Failure of below-knee fitting may be explained by the infrequent use of a conventional below-knee prosthesis with knee lock. Cosmetic considerations are less important in geriatric patients.

A Comparison of the SACH and Single Axis Foot in the Gait of Unilateral Below-Knee Amputees: Nancy Doane and L. E. Holt (Faculty of Health Professions, Dalhousie University, Halifax, Nova Scotia, Canada) Prosthetics and Orthotics International 7:33–36, April 1983.

Eight male unilateral below-knee amputees were evaluated wearing a single axis foot and a SACH assembly with temporary patellar tendon bearing prostheses with cuff suspension. As they walked 6 meters on level flooring they were photographed simultaneously from lateral and frontal perspectives. Measurements included vertical displacement and velocity of the center of mass; hip, knee, and ankle angles at heel strike, foot flat, mid stance, heel off, toe off, acceleration, mid swing, and deceleration. The percentage of time spent in stance, swing, and double support phases was calculated, as well as step and stride lengths. Six angular comparisons proved statistically significant, although in five instances, the difference was 4 degrees or less. The clinically important comparison was ankle angle at foot flat, which showed a difference of 6.5 degrees between the two foot types. The single axis foot permits more plantar flexion and dorsiflexion than SACH. The amount of time spent in each phase of gait was approximately the same regardless of type of foot. Interchanging prosthetic feet thus did not appear to have a significant overall effect on gait.

The Seattle Prosthetic Foot—A Design for Active Sports: Preliminary Studies: Ernest Burgess, Drew Hittenberger, Shirley Forsgren, and DeVere Lindh (Prosthetics Research Study, Seattle, Washington) Orthotics and Prosthetics 37:25–31, 1983.

The major problems encountered in sports are running and walking long distances. Ten physically active amputees were photographed running at self-selected constant speeds. Ground reaction forces acting on the prosthesis were two to three times body weight. Several amputees were unaware they could run; one ran 40 yards in 5 seconds after coaching. The major problems were maintenance of an excessively straight knee on the prosthetic side during heel contact, reducing shock absorption and overstressing the knee, hip, and spine, and restricted range of motion of the intact knee and hip during swing phase. Normal foot function during running requires pronation and supination to allow the foot to roll on the lateral border after ground contact. Prosthetic feet do not have an adequate amount of this motion. Running prostheses should be plantar flexed so that the runner's weight can be centered over the ball of the foot during push off. Rubber latex sleeves minimized pistoning while the wearer ran. An energy storing ankle-foot design is needed. The new foot incorporates a fiberglass leaf spring mechanism to aid push off. The spring stores and releases the energy of gravitational compression. A rubber deflection bumper is angled 22 degrees. An extension limitation cable just anterior to the bumper allows the foot to compress but not extend. The new design is being evaluted through laboratory strength testing, running analysis with force plates, and patient responses. Amputees noted initial difficulty with slow walking; the foot tended to throw the leg forward. Running and ramp and stair ascent were easier with increased stride length and push off force. The foot increased activity levels to include easier running and jumping with more comfort.

Gait Patterns in Above-Knee Amputee Patients: Hydraulic Swing Control vs Constant Friction Knee Components: M. Patricia Murray, Lousie Mollinger, Susan Sepic, Gena Gardener, and Marcia Linder (Kinesiology Research Laboratory, Veterans Administration Medical Center, Wood, Wisconsin) Archives of Physical Medicine and Rehabilitation 64:339–345, August 1983.

Seven male traumatic unilateral above-knee amputees walked with both a prosthesis with one of several types of constant friction knee unit and one with a hydraulic knee, either Henschke-Mauch or Dupaco. Interrupted light photography recorded displacement patterns of multiple body segments. At slow speed no significant differences exist between gait with either type knee unit, with regard to velocity, cadence, and stride length. At free and fast speeds, amputees walked faster with hydraulic units, increasing cadence, rather than stride length. At all speeds, amputees walked slower than normal controls, regardless of types of prosthesis, and had longer prosthetic swing phase than sound swing phase, especially with constant friction units. Step length with hydraulic components was 2 to 4 cm shorter than with constant friction units. Type of knee unit did not affect stride width or foot angle, although the prosthetic foot usually was in less toe-out than the sound foot.

Peak knee flexion in early swing increased notably when they walked faster, although flexion was subnormal with hydraulic units and excessive with constant friction. With constant friction at the end of swing phase, some amputees showed small hip extension excursion followed by flexion before heel strike. With either type unit, amputees were in less dorsiflexion during stance and more plantar flexion at toe-off, and most exhibited vaulting during fast walking. During fast walking with constant friction, ipsilateral elbow excursion was notably more subnormal than with hydraulic components. Heel rise during fast walking was markedly excessive with constant friction, but within normal range with hydraulic units.

Ambulation Levels of Bilateral Lower-Extremity Amputees: Analysis of One Hundred and Three Cases: Louis Volpicelli, Richard Chambers, and F. William Wagner, Jr. (Rancho Los Amigos Hospital, University of Southern California, Downey, California) Journal of Bone and Joint Surgery 65-A:599–605, June 1983.

Of the 1100 patients with lower limb amputation admitted during the past twelve years, 103 subsequently required contralateral amputation. Postoperatively, the amputation limb was placed in a soft or plaster dressing, depending on the level of amputation. Most patients were discharged in a wheelchair. Following wound healing, one to three months after surgery, they were readmitted for prosthetic training, usually for two to four weeks.

The average interval between amputations was 2.8 years, and the median was 1.2 years. No correlation exists between interval and rehabilitative outcome. The only bilateral above-knee or through-knee amputees able to walk with prostheses were traumatic amputees. A fourth of AK/BK amputees walked with prostheses and auxiliary aids; half were able to transfer from the wheelchair with prostheses. No correlation exists between sex, different levels of amputation, or extent of systemic disease and success of rehabilitation. Eighty per cent of patients with bilateral BK or Syme's amputation were prosthetically rehabilitated; none were bedridden. Those with one or two Syme's amputations did better than the bilateral BK amputees. Age, etiology, systemic involvement and levels of amputation are important predictors of rehabilitation outcome, rather than patient motivation.

Oxygen Consumption of Elderly Persons With Bilateral Below-Knee Amputations: Ambulation vs Wheelchair Propulsion: Lori DuBow, Philip Witt, Murali Kadaba, Rudolpho Reyes, and George Cochran (Helen Hayes Hospital, West Haverstraw, New York) Archives of Physical Medicine and Rehabilitation 64:255–259, June 1983.

Six bilateral dysvascular below-knee amputees, aged 45 to 70 years, were compared with eight nonamputees of similar age. All amputees had completed prosthetic rehabilitation and could walk for at least 5 minutes; none had pain, edema, or ulceration. Tests were conducted on two consecutive days at the same time each day. On the first day, subjects walked 40 meters at their natural speed with any accustomed aids. On the second day, they performed on a stationary wheelchair ergometer fitted to the individual's wheelchair. They propelled the wheelchair the equivalent distance walked the previous day.

The average velocity of the control group during ambulation was 63 meters per minute compared with 40 for the amputees, a 64 per cent performance. With the wheelchair, the mean velocities of amputees and nonamputees were similar, and amputee ambulation and wheelchair velocities were similar. Able-bodied persons walked 48 per cent faster than they propelled a wheelchair. Mean resting heart rate showed no significant difference between groups or activities. Amputees had a 26 per cent higher heart rate than controls during ambulation. During wheelchair propulsion, both groups had similar heart rates. Oxygen consumption during ambulation was 157 per cent more for amputees than for wheelchair propulsion. Wheelchair propulsion is physiologically less demanding for elderly bilateral below-knee amputees than prosthetic ambulation, and allows one to be mobile at a greater velocity. The wide divergence in results among patients highlights the need for individual evaluation with regard to mobility training.

Energy Expenditure in Hip Disarticulation and Hemipelvectomy Amputees: Farhad Nowroozi, Mario Salvanelli, and Lynn Gerber (University of California Irvine Medical Center, Orange, California) Archives of Physical Medicine and Rehabilitation 64:300–303, July 1983.

Eight hip disarticulates and ten patients with hemipelvectomy were compared with 11 able-bodied individuals. The amputees used prostheses, had no existing tumor nor clinically evident cardiovascular or pulmonary disease, nor chemotherapy or radiation therapy for the past 6 months. Subjects walked with prosthesis and any accustomed ambulatory aid. After resting they walked with two crutches, using the swing-through gait.

Walking speeds were significantly slower as compared with able-bodied controls. Crutch ambulation was significantly faster than prosthetic walking. Oxygen consumption during rest and comfortable walking speed was not significantly different. Amputees had higher resting pulse rates, but all returned to preexercise rates within five minutes of terminating exercise. Energy cost was not significantly different when comfortable speeds were compared; crutch walking had slightly lower consumption than prosthetic walking. When oxygen consumption is expressed per unit of distance worked, the greater efficiency of unimpaired individuals is evident. Hip disarticulates spent 82 per cent more energy than controls, and hemipelvectomy patients spent 125 per cent more. The energy cost of crutch walking was 45 per cent more than walking by the control group. Hip disarticulates walked at 61 per cent and hemipelvectomy patients at 51 per cent of normal speed. Amputees could not maintain fast walking very long.

Research and Development of Functional Aids: H. J. Blanken, C. F. Fuss, and H. Bakker (Department for Research and Development, Revalidatiecentrum "De Hoogstraat", Leersum, Holland) Prosthetics and Orthotics International 7:37–40, 1983.

Four aids were designed for individuals with spinal cord injury. Criteria for aids are lightweight, compactness, avoidance of external power supply, silence, acceptability of form, easy fitting, anti-allergy material, and aesthetic value. Major practicalities are use of standardized parts, possibility of adjustment, and simple assembly. The aid should fit with skin pressure lower than systolic capillary pressure. Mechanical axes must correspond with bodily joints; fit should be snug with allowance for ventilation, be easy to clean, and be cosmetic. Thin-walled stainless steel tubing is used for devices because it is strong, light, and easily assembled.

A steel and polyethylene elbow extension orthosis for a C5 or C6 quadriplegic has a spring to provide extension force. Increasing elbow flexion increases the pull in extension. The orthosis has adjustable, hinged, perforated plastic cuffs, and is maintained on the arm with spring tension, without straps. A new design of steel flexor hinge splint is more aesthetic than other versions. The third aid is a rolling writing aid which decreases resistance of the hand over paper. The hand lies on a small steel frame which has two ball-bearing fittings; the pen provides the third support for a stable base. The patient can rest the hand on the support without need to support the whole arm. The fourth aid is a urinary device for females, enabling voiding while seated in the wheelchair; it consists of a plastic tube with an oval opening at one end and a collection bag at the other end. Use is facilitated by a wheelchair cushion with a removable center portion.

Low Profile Dynamic Splinting of the Injured Hand: Judy Colditz (Raleigh Hand Rehabilitaion Center, Raleigh, North Carolina) American Journal of Occupational Therapy 37:182–188, March 1983.

Dynamic splinting facilitates hand rehabilitation by providing low amplitude force over a prolonged period to influence the synthesis of new tissue, keeping tissues in constant mild tension. Sterling Bunnell had designed plaster splints with outriggers many of which were low profile with force lines directed parallel to the splint base. For easy manufacturing the custom molded plaster bases were sacrificed for metal, necessitating high outriggers. Low temperature plastics allow rapid application of low profile splints. The line of pull of force to stretch a joint should be perpendicular to the axis of the long bone that is the distal articulation of the joint in question. The outrigger end is as close as possible to the point of force application, allowing it to be of minimal length. The outrigger directs the line of pull, keeping it close to and parallel with the splint base. The finger loop is attached to string carried over or under the outrigger, and a rubber band is attached to the string. The band is secured to the base by hooking it over a small metal hook on the base.

Bases are made of polycaprolactones. Brass welding rod is well suited for outriggers hooks, loops, and pulleys. Loops are leather, vinyl, or plastic. Nylon monocord and stationer's rubber bands complete the assembly. Outrigger and base stability are obtained with short outriggers and close anatomic conformity of the base. Force application should be specific and changed as the patient's needs alter. Uniform low pressure distribution is easier to obtain with low profile designs than with the traditional lumbrical bar. A rubber band provides more constant tension the longer distance it is stretched. Low Profile orthoses are less cumbersome than previous designs involving high outriggers.

Triceps Pronation—Supination Orthosis: Daniel Cole and Paul Clarkson (Bulach Orthopedic Appliance Company, Toledo, Ohio) Orthotics and Prosthetics 36:57–61, Winter 1982–1983.

The Triceps-Supination Orthosis was designed for a C6 quadriplegic with elbow flexion contracture and forearm limitation. It extends the elbow while permitting active flexion, pronation, and supination. During rehabilitation, the patient had six inhibitive serial casts to obtain more elbow extension. The casts applied neutral warmth with prolonged stretch in a submaximal range. Each cast increased range approximately 9 degrees, although gains were not maintained following cast removal. The orthosis is intended for individuals with contracture or spasticity. Active elbow extension of minus 45 degrees and passive pronation and supination are prerequisites for fitting. The orthosis will extend the elbow to minus 10 degrees depending on the severity of spasticity, and will permit full forearm motion. High patient motivation is also necessary for best use of the device.

The orthosis incorporates mechanisms permitting adjustment of the amount of tension applied to the mechanical elbow and radioulnar joints. Rotation of a spring alters the amount of tension. For forearm motion, rod end bearings imitate radial motion. Proximally, the rod end bearings are riveted to a forearm band and distally to a polypropylene wrist cuff. Two threaded steel rods rotate in the sleeve of the proximal rod end bearing. Distally, the rods are attached statically to the rod end bearings. A torsion spring over the radial rod passively advances the hand into pronation. In addition to increasing elbow and forearm mobility, the orthosis aids wheelchair propulsion, feeding, and light hygiene.

Risk Factors in Low-Back Pain: J. W. Frymoyer, M. H. Pope, Janice Clements, David Wilder, Brian MacPherson, and Takamaru Ashikaga (Department of Orthopaedics, University of Vermont, College of Medicine, Burlington, Vermont) Journal of Bone and Joint Surgery 65-A: 213–218, February 1983.

A self-administered questionnaire survey was conducted of all men between the ages of 18 and 55 who were patients of a family practice facility during a 3-year period. Subjects rated current or past back pain as none, mild, discomforting, distressing, horrible, or excruciating. Items dealt with symptoms, medical care, occupational requirements, use of motor vehicles, recreation, and time lost from work. Thirty per cent of the respondents never experienced pain; 46 per cent had moderate pain, and 24 per cent had had severe symptoms. The median age for each of the three groups was 33 years. Three per cent had had surgery. Men with moderate or severe pain were much more likely to be cigarette smokers than those without pain. The most important prognostic variable was repetitive weight lifting of 20 kilograms or more. Patients who used jackhammers or other vibrational equipment were more likely to have pain, as were professional drivers. Current and past sports activity was not appreciably different among the groups, although those who were cross-country skiers during adolescence were more likely to develop moderate pain in adulthood.

Bed rest and medication were the most common treatments, although a significant number had physical therapy and back supports. The economic consequences of low back pain can be extrapolated to $11 billion annual lost wages.

The Use of Psychological Tests in the Evaluation of Low-Back Pain: Steven Southwick and Augustus White (Section of Orthopaedic Surgery, Yale University School of Medicine, New Haven, Connecticut) Journal of Bone and Joint Surgery 65-A:560–565, April 1983.

Two of every three people will suffer from low-back pain eventually. Of the 1.25 million Americans who injure their backs annually, more than 65,000 qualify for permanent disability. Failure to understand the physiological and psychological complexities of pain accounts, in part, for the low success rate of treatment. Pain may be a means of dealing with guilt, especially for those who believe that they do not deserve happiness. The pain-prone patient utilizes pain to avoid even more unpleasant feelings. Others use pain for stimulating affection and controlling the environment. Chronic pain may be an acceptable means of blaming failures.

The most widely used self-administered questionnaire is the Minnesota Multiphasic Personality Inventory. Its 550 items separate into ten clinical psychological scales and three validity scales. In low-back pain, the most important indication of somatic fixation is abnormal elevation of hypochondriasis and hysteria. Scores of patients with functional pain were significantly higher than those with organic findings on the scales of hysteria, depression, hypochondriasis, psychopathic deviance, psychoasthenia, and schizophrenia. Scores can aid prediction of who should have success with orthopedic treatment; low hypochondriasis, depression, and hysteria scores were found among patients achieving good treatment results. Litigation patients scored significantly on those scales. The inventory also elucidated other personality characteristics, particularly chronic anxiety with resultant tendency toward compulsiveness which predisposes such persons to conversion symptoms by which they resolve psychological conflicts.

The Cornell Medical Index, 195 items, is moderately helpful in understanding spinal pain; low-back patients have a greater tendency to adopt an invalid self-concept than do arthritics. The Middlesex Hospital Questionnaire and the Eysenck Personality Inventory are other self-administered tests pertinent in differentiating patients likely to have functional pain. The Melzack Pain Questionnaire consists of 102 words relating to pain, enabling subjects to describe pain; the experience of pain seems to originate from sensations of tissue damage and from the effect of pain on one's mood. Those with organic pain used fewer words to describe pain than those with functional disorder. The Mooney Pain Diagram permits subjects to draw the site of pain; those with anatomically confusing patterns tend to have histories of chronic pain. Routine use of psychological testing is warranted to predict treatment outcome.

Principles of Design for Lower Limb Orthotics: Andre Bahler (Atelier for Modern Orthopedics, Zurich, Switzerland) Orthotics and Prosthetics 36:33–39, Winter 1982–1983.

Existing motions must not be restricted unnecessarily. Orthotic axes should match body axes as perfectly as possible to avoid shear stresses. When the orthosis is attached to the shoe, effective positioning of the stop is difficult and appearance is compromised. The sandal creates spatial problems with shoe size, but offers clearer proportions with regard to the entire orthosis. The shoe and foot support must be level to the floor, regardless of foot deformity. A low lateral trim gives less hold on the outside. The positive model of the foot should be taken weight bearing, or the heel of the model be flattened and plaster added to give the calcaneus room. If the foot can be corrected actively or passively, the orthosis should be aligned so that the plumb line of the leg and orthosis coincide with the line of the foot. Support should never lie medial to the foot. Joints should be on the sagittal plane, regardless of the amount of toe-out.

Overcorrection of knee valgus or varus limits leg extension. Avoid free play between the orthosis and leg, especially when hip muscles are weak. If one joint is blocked, the two adjacent limbs form a rigid lever whose mechanical importance lies in the line connecting the two free ends: the line corresponds to the longitudinal axes of both limbs, rather than the anatomical axis. An ankle-foot orthosis with blocked dorsiflexion thus aids the patient with quadriceps paralysis and active hip musculature. A knee lock requires that the dorsiflexion stop be reduced considerably because knee and foot movements should not be blocked simultaneously. The dorsiflexion stop should never exceed 90 degrees; otherwise, the knee will hyperextend and the patient will experience difficulty in stance transition. To increase knee stability, lengthen the foot support, rather than extending the dorsiflexion angle. A soft plantar-flexion stop prevents toe drag without exerting a knee flexion moment.

Development of a Universal Control Unit for Functional Electrical Stimulation (FES): Bruce Brandell (Department of Anatomy, University of Saskatchewan, Saskatoon, Saskatchewan, Canada) American Journal of Physical Medicine 61:279–301, December 1982.

The original small portable FES unit, reported in 1961, was supplanted in Yugoslavia by larger portable stimulators which divided the gait cycle into 16 parts of equal duration with individually adjustable intensities of stimulation. Many hemiplegics, however, cannot maintain the regular cadence needed for the system. The present system is a nonportable battery-operated multichannel universal control system, by which FES can be timed independently of cadence. The sequence and strengths of FES can be adjusted to a wide range of gait variations. The unit is less bulky, less expensive, and less complex than comparable portable units with wide operational options.

Patterns of logic triggered by the heel, ball, and toe switches on each foot are formed on the console by externally plugging into five kinds of electronic units: (i) an inverter causes delays determined by a timer; (ii) flip flops are turned on and off by separate positive pluses; (iii) a one-shot timer is triggered by a positive pulse to produce a positive pulse for an adjustable duration: (iv) OR gate allows convergence of logic sequences into a single FES channel; and (v) AND gate is triggered if all sequences are producing positive pulses simultaneously. The logic is always gated through an AND gate to produce interrupted direct current with potential frequency range of 20 to 100 cps. This protects the patient against continous surges of direct current.

Toe contact initiates FES to the dorsiflexors. As the toe leaves the floor, the rising pulse from the inverter signals the start of a flip flop unit's "on" phase which is terminated by heel contact. Alternatively, the duration of FES can be regulated by timers. Application of FES to calf muscles briefly just after foot-flat and for a longer period from foot-flat to toe-off improves gait. Other logic circuits are also described and diagrammed.

Plastic Ankle-Foot Orthoses: Evaluation of Function: Justus Lehmann, Peter Esselman, Michael Ko, Craig Smith, Barbara deLateur, and Alan Dralle (Department of Rehabilitation Medicine, University of Washington, Seattle, Washington) Archives of Physical Medicine and Rehabilitation 64:402–407, September 1983.

Gait characteristics of ten subjects were evaluated as they walked with five different ankle-foot orthoses (AFOs). The subjects included six hemiplegics and four nondisabled persons. All hemiplegics could walk without a cane and had some dorsiflexion limitation. All wore laced Oxford shoes. The orthoses were the TIRR(Engen) corrugated polypropylene, Teufel polycarbon posterior leaf spring, and three versions of the Seattle polypropylene orthosis. One was trimmed just anterior to the malleoli, another terminated just posterior to the malleoli, and the third was trimmed farther posterior. A self-aligning electrogoniometer measured plantar and dorsiflexion, and a gait event marker system recorded the occurrence of heel strike, toe strike, heel-off and toe-off. The anteriorly trimmed Seattle AFO restricted motion more than the Teufel. All motion comparisons among the various Seattle trimlines were significantly different; with each trim, the AFOs became more flexible. The Engen orthosis was not significantly different from any Seattle AFO, except that it allowed less peak dorsiflexion than the most posteriorly trimmed Seattle AFO. No difference existed between peak plantar-flexion values at heel strike for control or paretic subjects. During push-off, the peak dorsiflexion values were significantly lower for hemiplegics wearing all braces except the Engen. The Teufel was the most flexible AFO. The anteriorly trimmed Seattle orthosis provided the best substitute for push-off by restricting dorsiflexion; it also resisted plantar flexion the most during swing phase.

Orthotic Management of Knee Injuries in Athletics with the Lenox Hill Orthosis: Edward Van Hanswyk and Bruce Baker (Department of Orthopedic Surgery, College of Medicine, State University of New York, Syracuse, New York) Orthotics and Prosthetics 36:23–28, Winter 1982–1983.

Knee instability may be straight lateral or straight medial, demonstrated by widening of the joint space with varus or valgus stress exerted on the knee at full extension or some flexion. Straight anterior and posterior instabilities are illustrated by drawer signs. Rotary instabilities involve posteriomedial, anteromedial, anterolateral, and posterolateral instabilities. Instabilities are often combined. The shape of the femoral condyles, tibial plateau, and intercondylar eminence contributes to stability. The slight concavity of the plateau controls rotation and produces some straight stability during weight bearing. Menisci, muscles, and ligaments also aid stability.

The Lenox Hill orthosis protects nonoperatively treated patients against recurrent stress during activity. The orthosis also increases static stability of postoperative patients. It may be fitted by taking a positive mold before surgery so it will be ready for application on cast removal in 6 weeks. Alternatively, the mold may be taken during the first cast change 2 weeks postoperatively, allowing for better accommodation of atrophy. If athletic activity is allowed, the orthosis is worn up to 1 year. With the knee extended, valgus deviation is resisted by lateral leg pads above and below the knee and the medial knee disc. With the knee flexed, anteroposterior tibial excursion is resisted by the pretibial bar, derotation strap, distal knee loop, and circumferential rubber, all opposed by the circumferential rubber above the knee. A side joint stop and nonelastic popliteal strap resist hyperextension. The orthosis also resists rotary instability by lateral leg pads, medial knee disc, derotation strap, and the circumferential rubber above and below the knee.

Non-Operative Treatment of Complete Tears of the Medial Collateral Ligament of the Knee: Peter Indelicato (Department of Orthopaedics, College of Medicine, University of Florida, Gainesville, Florida) Journal of Bone and Joint Surgery 65-A:323–329, March 1983.

A prospective study of all consecutive patients diagnosed as having isolated complete tear of the medial collateral ligament was conducted. The mechanism of injury was valgus stress to the lateral aspect of the distal thigh or proximal leg. All patients had stress testing under general anesthesia within six days of injury and all had arthroscopic evaluation to ascertain that there were no other intra-articular injuries. Twenty-four patients seen early in the study had surgical repair of the ligament. All patients were placed immediately in a toe-to-groin plaster cast. The surgical patients retained the cast for six weeks while walking with minimum weight-bearing; the cast was then removed and active exercises inititated. The twenty-seven patients seen later in the study had the cast changed to a fiberglass hinged cast brace at two weeks; the orthosis allowed 30 to 80 degrees of flexion. All patients had similar rehabilitation, concentrating on quadriceps, hamstring, and hip flexor power. No appreciable difference existed in age or athletic ability between the surgical and non-surgical groups.

Clinical results were graded by objective physical examination, subjective responses relating to activities, and performance of functional activities. Those with cast-bracing treatment scored better with regard to per cent of patients achieving good to excellent results (90 percent versus 88 percent) and speed of rehabilitation (11 weeks versus 15 weeks).

The study demonstrated the value of early protected mobilization in a cast brace for ligament injuries of the knee. Rehabilitation was facilitated without any apparent negative effects on the final stability of the knee. Both groups achieved minimum knee laxity of no functional significance. No obvious advantage was gained by surgical intervention.

Electrogoniometry of Post-Surgical Knee Bracing in Running: Kathleen Knutzen, Barry Bates, and Joseph Hamill (Department of Physical Education, University of Oregon, Eugene, Oregon) American Journal of Physical Medicine 62:172–181, August 1983.

An Ace elastic support brace and Lenox Hill derotation brace were activated during overground running, using the CARS-UBC electrogoniometer, on six young adults, all of whom had unilateral knee surgery for repair or removal of deranged structures at least 10 months prior to testing. All had worn the Lenox Hill orthosis and maintained daily regimens of jogging, bicycling, swimming or soccer.

Subjects ran with the elctrogoniometer in place in a 20 meter area at 3.35 to 3.58 m/s pace. The derotation brace reduced maximum knee flexion 11 per cent during swing phase and maximum external rotation to a significant extent. No marked differences existed between orthoses as measured by maximum flexion during stance or maximum internal rotation. Restraint on dynamic flexion was considered undesirable, but not significant in altering the total gait pattern. Subjects responded to the decreased restraining effect of the elastic support by producing greater flexion values in stance and swing than were obtained as the surgical limb was measured with no brace. The elastic support may have influenced the subjects' ability to move the joint through greater ranges. The elastic device tended to equalize internal and external rotation parameters of the surgical limb. Since the healthy limb demonstrated greater external rotation values, the effect of the elastic support was to increase external rotation so it approximated the healthy limb performance. The derotation brace reduced external tibial rotation of the surgical limb 31 per cent and internal rotation 22 per cent, whereas the elastic support increased external tibial rotation and did not reduce any motion parameter.

AD-A141 740 JOURNAL OF REHABILITATION RESEARCH AND DEVELOPMENT(U) VETERANS ADMINISTRATION WASHINGTON D C MAY 84 2/2

UNCLASSIFIED F/G 6/5 NL

END
DATE
FILMED
7-84
DTIC

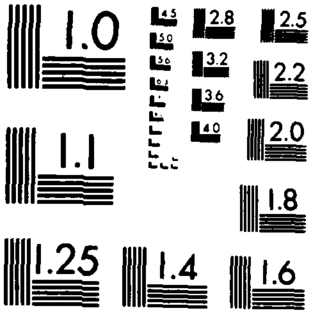

MICROCOPY RESOLUTION TEST CHART
NATIONAL BUREAU OF STANDARDS-1963-A

Arm Crank vs Handrim Wheelchair Propulsion: Metabolic and Cardiopulmonary Responses: Philip Smith, Roger Glaser, Jerrold Petrofsky, Paul Underwood, Glen Smith, and Julia Richard (Department of Physiology, Wright State University, Dayton, Ohio) Archives of Physical Medicine and Rehabilitation 64:249–254, June 1983.

Nine healthy individuals and seven with lower limb disabilities were evaluated while propelling an Everest and Jennings Universal model wheelchair with and without an arm cranked Unicycle attachment. The arm cranked version was arranged to control for the weight it would have added to the basic wheelchair. Participants rolled over smooth and carpeted surfaces at various speeds.

Able-bodied and disabled participants exhibited the same general responses to all wheelchair combinations. Handrim propulsion elicited significantly higher energy costs, in spite of the disabled persons' chronic exposure to wheelchairs requiring the upper body propulsion system of handrim operation. Arm cranking requires lower pushing force because the rolling resistance is greatly improved when the small front casters of the conventional wheelchair are raised off the floor by the larger wheel of the Unicycle. Cranking employs asynchronous movements of the upper limbs, rather than synchronous arm movements in handrim use. Asynchronicity may use inherent neural pathways of reciprocal innervation while also permitting continuous force application, rather than intermittent thrusts used during handrim stroking. Cranking allows propulsion whether the person pushes or pulls, and involves greater muscle mass than does handrim stroking.

Addition of gear drive variability to wheelchair design allows better matching of propulsion system force application to the physique of the user. High and medium gears are best for arm cranking, but low gear may be essential for traversing ramps and rough flooring and for feeble patients.

Structural Matrices for Use in Rehabilitation: D. G. Cooper, J. Foort, and R. E. Hannah (Medical Engineering Resource Unit, University of British Columbia, Vancouver, British Columbia, Canada) Prosthetics and Orthotics International 7:25–28, April 1983.

Conventional materials do not permit easy adjustment with adequate strength. A structural node and beam matrix was developed forming a strong enclosing or supporting structure. The matrix is an array of small components which can be linked, shaped, and locked. It has a wide range of rigidities and is adjustable in stiffness and shape. The matrix is suitable for cerebral palsy seating. The system, however, can only be contoured easily to cylindrical-conical shapes. Also, the locking force of the matrix is opposed by loading forces acting along the neutral axis of the structure, so very high friction is needed at the nodes to give secure locking. The system uses the I-beam principle, where structural beams are separated from the neutral axis; rods are separated by nodes. Loading puts one beam in tension and the other in compression, creating a strong structure. Nodes can be positioned at any point along the beam, giving continuous adjustment and complex shapes. The system is also applicable to lower and upper limb and spinal bracing, and may eventually replace plaster for many orthotic applications. Further refinements will include use of different surfacing elements under different loading conditions, and use of insertable modules for functions such as load measurement, feedback, and attachment of accessories such as hinges. The matrix approach takes advantage of mass production for producing standard components which can be assembled without special tools or facilities. The resulting appliances are lightweight and well ventilated.

PUBLICATIONS OF INTEREST

The Journal's "Publications of Interest" pages list selected articles, books, and reports dealing with the following subject areas: Bioengineering & Biomechanics, General (Rehabilitation), Orthotics, Prosthetics, Sensory Aids, Spinal Cord Injury, and Surgery (Amputation). Most of the articles cited are selected from journals subscribed to by the Office of Technology Transfer (OTT) Reference Collection, while others have been obtained directly from the authors after the works had been abstracted in Bioengineering Abstracts and/or Excerpta Medica, or were cited as references and reviews in other source documents.

To obtain a copy of a specific article, readers are advised to direct inquiries to the author. The name and address of the author to be contacted appears at the end of each listing. In most instances, reprints of recent papers are available free of charge from authors.

Books and reports should be obtained from the publishers. The name and address of the publisher, and the price, appear with the publication title.

The books, journals, and reprints listed in "Publications of Interest" may be examined or used for study at the OTT premises, but do not circulate. Individuals planning to visit the Rehabilitation R&D Reference Collection are advised to write or telephone in advance to Ms. Lily W. Hom, Technical Information Specialist, Office of Technology Transfer, Rehabilitation R&D Reference Collection, 252 Seventh Avenue, New York, New York 10001. Callers using the Federal Telephone System should call FTS 660-6659 or 6670; the commercial numbers are (212) 620-6659 and 6670.

BIOENGINEERING

Analysis of Residual Stress in Failed T-28 Femoral Stems, R.D. Stroud (Orthop. Research Labs, TB-139, University of California at Davis, Davis, CA 95616, U.S.), S.A. Brown and J.F. Shackelford; Biomat., Med. Dev., and Artificial Org., 11(1):13–20, 1983.

Biomechanical Design of a Total Ankle Prosthesis, P.M. Calderale, R. Barbiero, A. Garro, G. Fasolio, and F. Pipino; Engng. in Med., 12(2):69–80, Apr. 1983. (MEP Ltd, Article Reprint Ser., P.O. Box 24, Northgate Ave., Bury St. Edmunds, Suffolk IP32 6BW, England)

Determination of Femoral Head Containment During Gait, G.T. Rab; (Dept. of Orthopedic Surgery, University of California at Davis. Davis, CA 95616, U.S.A.) Biomat., Med. Dev., & Artificial Org., 11(1):31–38, 1983.

The Effect of Inertial Factors on Spinal Stress When Lifting. T.P.J. Leskinen (Dept. of Physiology, Inst. of Occup. Health, Helsinki, Finland), H.R. Stalhammar, I.A.A. Kourinka and J.D.G. Troup; Engng. in Med., 12(2):87–90, Apr. 1983.

The Effect of Stimulus Parameters on the Recruitment Characteristics of Direct Nerve Stimulation, P.H. Gormar (Appl. Neural. Control Lab., Dept. of Biomed. Engng. Case Western Reserve Univ, Cleveland, OH 44106, U.S.A.) and J.T. Mortimer; IEEE Transac. on Biomed. Engng., BME-30(7): 407–414, July 1983.

Instrumentation for Analysis of Continuous Neck Rotation, I.R. Rankin (Dept. of Instrumentation and Analytical Science, UMIST, Manchester, England), C. Murphy, B.E. Jones, and M.I.V. Jayson; Engng. in Med., 12(2):91–94, Apr. 1983.

Modelling of the Femoral Load Transfer in Total Hip Joint Replacement—A Preliminary Study, A.W. Miles (Dept. of Mech. Engng., Univ of Cape Town, South Africa), D.M. Dall, and B.F. McCleland; Engng. in Med., 12(2):61–64, Apr. 1983.

A New Femoral Component Design Based on the Trabecular Systems of the Proximal Femur, M.A. Gomez (Division of Orthop. Surgery and Rehab., University of California, San Diego, La Jolla, CA 92093, U.S.A.), S.L-Y. Woo and R.D. Coutts; Biomat., Med. Dev., & Artificial Org., 11(1):39–50, 1983.

Spectral Analysis of Electrical Impedance Measurements on the Lower Limbs, W.S. Filho, O.F. Brum, (Dept. of Angiology, Univ. Hosp. of the Federal Univ. of Rio de Janeiro, 21944 Rio de Janeiro, Brazil) and R.B. Panerai; IEEE Transac. on Biomed. Engng., BME-30(7):387–391, July 1983.

The Stability of the Human Patello-Femoral Joint, I. Hvid (The Orthopedic Hospital, Ärhus, Denmark); Engng. in Med., 12(2):55–60, Apr 1983.

BIOMECHANICS

Adduction Contracture of the Thumb in Cerebral Palsy. A Preoperative Electromyographic Study, M.M. Hoffer (Pathokinesiology Service, Rancho Los Amigos Hospital, 7601 E. Imperial Highway, Downey, CA 90242, U.S.A.), J. Perry, M. Garcia and D. Bullock; J. Bone & Jt. Surg., 65-A(6):755–759, Jul. 1983.

Anatomy and Biomechanics of the Hindfoot, J. Perry (Pathokinesiology Service, Rancho Los Amigos Hospital, 7601 E. Imperial Highway, Downey, CA 90242, U.S.A.); Clin. Orthop. & Rel. Res., 177:9–15, Jul.–Aug. 1983

Biomechanical Analysis of Canine Intervertebral Discs after Chymopapain Injection: A Preliminary Report, K. Wakano, R. Kasman, E.Y. Chao (Biomechanics Lab., Dept. of Orthopedics, Mayo Clinic, Rochester, MN 55905, U.S.A.), D.S. Bradford and T.R. Oegema; Spine, 8(1):59–68, Jan.–Feb. 1983.

Biomechanical Analysis of Foot Function During Gait and Clinical Applications, Y. Katoh, (Biomechanics Lab., Dept. of Orthopedics, Mayo Clinic, Rochester, MN 55905, U.S.A.), E.Y.S. Chao, R.K. Laughman, E. Schneider, and B.F. Morrey; Clin. Orthop. & Rel. Res., 177:23–33, Jul.–Aug. 1983.

Calf Muscle Moment, Work and Efficiency in Level Walking; Role of Series Elasticity, A.L. Hof (Laboratory of Medical Physics, University of Groningen, Bloemsingel 10, The Netherlands), B.A. Geelen and Jw. Van Den Berg; J. Biomech., 16(7):523–538, 1983.

Changes in Duration and Amplitude of the Evoked Muscle Action Potential (EMAP) over Distance in Peroneal, Median, and Ulnar Nerves, G. Felsenthal (Dept. of Rehab. Med., Sinai Hosp. of Baltimore, Belvedere Ave. at Greenspring, Baltimore, MD 21215, U.S.A.) and C.S. Teng; Amer. J. Phy. Med., 62(3):123–134, June 1983.

Changes in Knee Function Associated with Treadmill Ambulation, G.M. Strathy, E.Y. Chao (Biomechanics Lab., Dept. of Orthopedics, Mayo Clinic/Mayo Foundation, Rochester, MN 55905, U.S.A.), and R.K. Laughman; J. Biomech., 16(7):517–522, 1983.

A Clinical Method of Quantitative Gait Analysis: Suggestion from the Field, K. Cerny (Dept. of Physical Therapy, California State University at Long Beach, Long Beach, CA 90840, U.S.A.); Phy. Ther., 63(7):1125–1126, Jul. 1983.

The Dynamic Mechanical Properties of Human Skin In Vivo, R.O. Potts (Gillette Research Institute, 1413 Research Blvd., Rockville, MD 20850, U.S.A.), D.A. Chrisman, Jr., and E.M. Buras, Jr.; J. Biomech., 16(6)365–372, 1983.

Effects of Feedback Stimulation Training and Cyclical Electrical Stimulation on Knee Extension in Hemiparetic Patients, P. Winchester (Stroke/Head Injury Service, Dallas Rehabilitation Institute, 7850 Brookhollow Rd., Dallas, TX 75235, U.S.A.), J. Montgomery, B. Bowman, and H. Hislop; Phy. Ther., 63(7):1096–1103, Jul. 1983.

Energy Expenditure in Hip Disarticulation and Hemipelvectomy Amputees, F. Nowroozi (Dept. of Physical Medicine and Rehab., University of California Irvin Medical Center, 101 City Drive South, Orange, CA 92668, U.S.A.), M.L. Salvanelli and L.H. Gerber; Arch. Phy. Med. & Rehab., 64(7):300–303, Jul. 1983.

Fatigue Considerations of Muscle Contractile Force during High-Frequency Stimulation, M. Solomonow (Dept. of Biomed. Engng., School of Engng, Tulane Univ., New Orleans, LA 70118, U.S.A.), E. Eldred, J. Lyman and J. Foster; Amer. J. Phy. Med., 62(3):117–122, June 1983.

Functional Performance after Excision of the Vastus Lateralis and Vastus Intermedius. A Case Report, M.P. Murray (Kinesiology Research Lab. (151), Veterans Administration Medical Center, 5000 W. National Ave., Wood, WI. 53193, U.S.A.), P.A. Jacobs, L.A. Mollinger and D.R. Gore; J. Bone & Jt. Surg., 65-A(6):856–859, Jul. 1983.

Gait Analysis in Cerebral Palsied and Nonhandicapped Children, K. Skrotzky (Université de Montréal, 2100 Boul Edouard-Montpetit, Montréal, PQ, H3C 3J7, Canada); Arch. Phy. Med. & Rehab., 64(7):291–295, Jul. 1983.

***In Vitro* Contact Stress Distributions in the Natural Human Hip**, T.D. Brown (Dept. of Orthop. Surg., 986 Scaife Hall, University of Pittsburgh, PA. 15261, U.S.A.) and D.T. Shaw; J. Biomech., 16(6):373–384, 1983.

Influence of Torque and Limb Speed on Power Production in Isokinetic Exercise L.R. Osternig (Department of Physical Education, College of Health, Physical Education and Recreation, University of Oregon, Eugene, Oregon 97403, U.S.A.), J. Hamill, J.A. Sawhill and B.T. Bates; Amer. J. Phy. Med., 62(4):163–171, Aug. 1983.

Lower Extremity Electromyographic Analysis of Running Gait, G.H. Schwab, D.R. Moynes (Centinela Hospital, Biomechanics Lab., 555 E. Hardy St. Inglewood, CA 90301, U.S.A.), F.W. Jobe, and J. Perry; Clin. Orthop. & Rel. Res., 176:166–170, Jun. 1983.

Mathematical Modeling of the Stress Strain-Strain Rate Behavior of Bone Using the Ramberg-Osgood Equation, T.K. Hight (Dept. of Mech. Engng. and Materials Science, Duke University, Durham, NC 27706, U.S.A.), and J.F. Brandeau; J. Biomech., 16(6):445–450, 1983.

Mechanical Analysis of the Human Pelvis and Its Application to the Artificial Hip Joint—By Means of the Three Dimensional Finite Element Method, H. Oonishi (Dept. of Orthop. Surg. and Artificial Joint Section, Osaka-Minami National Hospital, 677-6 Kawachinagano-shi, 586-Osaka, Japan), H. Isha and T. Hasegawa; J. Biomech., 16(6):427–444, 1983.

Nerve Conduction Studies in Upper Extremities: Skin Temperature Corrections, E.M. Halar (Chief, RMS (117), VA Medical Center, 4435 Beacon Avenue South, Seattle, Washington 98108, U.S.A.), J.A. Delisa and T.L. Soine; Arch. Phy. Med. & Rehab., 64(9):412–416, Sept. 1983.

Quantification of Intersegmental Reactions During Rapid Swing Motion, S.J. Phillips (Dept. of Physical Education, University of Maryland, College Park, Maryland, U.S.A.), E.M. Roberts and T.C. Huang; J. Biomech., 16(6):411–417, 1983.

Simple Method to Determine Sincerity of Effort during a Maximal Isometric Test of Grip Strength, J.C. Gilbert and R.G. Knowlton (Dept. of Phy. Ed., Southern Illinois Univ. at Carbondale, Carbondale, IL. 02901, U.S.A.); Amer. J. Phy. Med., 62(3):135–144, June 1983.

A Survey of Finite Element Analysis in Orthopedic Biomechanics: the First Decade, R. Huiskes (Laboratory for Experimental Orthopedics, University of Nijmegen, 6500 HB, the Netherlands), and E.Y.S. Chao; J. Biomech., 16(6):385–409, 1983.

Tendon Excursion and Moment Arm of Index Finger Muscles, K.N. An (Biomech. Lab., Dept. of Orthop., Mayo Clinic, Rochester, MN 55905, U.S.A.), Y. Ueba, E.Y. Chao, W.P. Cooney, and R.L. Linscheid; J. Biomech., 16(6):419–425, 1983.

GENERAL

Amyotrophic Lateral Sclerosis: A Comprehensive Rehabilitation Approach, D.W. Janiszewski (Dept. of Rehab. Medicine, Mount Sinai Medical Center, 1 Gustave L. Levy Place, New York, N.Y. 10029, U.S.A.), J.T. Caroscio, and L.H. Wisham; Arch. Phy. Med. & Rehab., 64(7):304–307, Jul. 1983.

Arm Crank vs Handrim Wheelchair Propulsion: Metabolic and Cardiopulmonary Responses, P.A. Smith, R.M. Glaser (Dept. of Physiology, Wright State University School of Medicine, Dayton, OH 45435, U.S.A.), J.S. Petrofsky, P.D. Underwood, G.B. Smith and J.J. Richard; Arch. Phy. Med. & Rehab., 64(6):249–254, Jun. 1983.

Assessing the Driving Potential of Cerebral Vascular Accident Patients, F.L. Quigley and J.A. DeLisa (Dept. of Rehabilitation Medicine, University of Washington, Seattle, Washington 98195, U.S.A.); Amer. J. Occup. Ther., 37(7):474-478, July 1983.

Axillary F Central Latency: Simple Electrodiagnostic Technique for Proximal Neuropathy, Y. Wu (Rehab. Institute of Chicago, 345 East Superior, Chicago, Il. 60611, U.S.A.), J.R.M. Kunz, T.D. Putnam and J.S. Stratigos; Arch. Phys. Med. & Rehab., 64(3):117-120, Mar. 1983.

Calculated Nerve Conduction Velocity Dependence upon the Method of Testing, R.L. Joynt (Rehabilitation Institute, 261 Mack Blvd., Detroit, MI 48201, U.S.A.); Arch. Phys. Med. & Rehab., 64(5):212-216, May 1983.

Carpal Tunnel Syndrome: Median Nerve Stress Test, E.L. Marin (Dept. of Physical Medicine and Rehab., Nassau County Medical Center, 2201 Hempstead Turnpike, East Meadow, N.Y. 11554, U.S.A.), S. Vernick and L.W. Friedmann; Arch. Phys. Med. & Rehab., 64(5):206-208, May 1983.

Chronic Pain Therapy with Transcutaneous Electrical Nerve Stimulation: Predictive Value of Questionnaires, A.C. Reynolds (Dept. of Anesthesiology, Medical College of Wisconsin, 8700 W. Wisconsin Ave., Milwaukee, WI 53226, U.S.A.), S.E Abram, R.A. Anderson, S.V. Vasudevan and N.T. Lynch; Arch. Phy. Med. & Rehab., 64(7):311-313, Jul. 1983.

Conduction Studies of the Medial Cutaneous Nerve of the Forearm, M.P. Reddy (Rehab. Medicine Service, Veterans Administration Medical Center, Martinez, CA 94553, U.S.A.); Arch. Phys. Med. & Rehab., 64(5):209-211, May 1983.

Contour Donor Chair: Device to Maximize Effects of Overhead Cervical Traction, S.V. Vasudevan, (Dept. of Physical Medicine and Rehab., Medical College of Wisconsin, 9001 W. Watertown Plank Rd, Milwaukee, WI 53226, U.S.A.) P.L. Thielen and J.L. Melvin; Arch. Phy. Med. & Rehab., 64(6):285, Jun. 1983.

Counterbalanced Swivel Fork, S.E. Nelson; (Rehabilitation Unit, Mayo Clinic, Rochester MN 55905, U.S.A.) Amer. J. Occup. Ther., 37(7):489-490, July 1983.

Cubital Tunnel Syndrome in Rheumatiod Arthritis, O.M. Balagtas-Balmaseda, (Moss Rehabilitation Hospital, 12th St. and Tabor Rd., Philadelphia, PA 19414, U.S.A.) M. Grabois, P.F. Balmaseda and M.D. Lidsky; Arch. Phys. Med. & Rehab., 64(4):163-166, Apr. 1983.

Educational Needs Assessment in Physical Medicine and Rehabilitation: The Foundation of Continuing Medical Education, N.A. Coldeway (Associate Director, Educational Development, IRMEC (11R), VA Medical Center, Salt Lake City, Utah 84148 U.S.A.) and J.A. Delisa; Arch. Phys. Med. Rehab., 64(9):391-395, Sept. 1983.

Exercise Therapies in Peripheral Neuropathies, G.J. Herbison (Dept. of Rehab. Medicine, Thomas Jefferson University Medical College, Philadelphia, PA 19107, U.S.A.) M.M. Jaweed and J. F. Ditunno, Jr; Arch. Phys. Med. & Rehab. 64(5):201-205, May 1983.

Feeding Device for Glossectomy Patients, S.M. Fleming (Audiology and Speech Pathology (126), Veterans Administration Medical Center, Allen Park, MI 48101, U.S.A.) and A.W. Weaver; Arch. Phys. Med. & Rehab., 64(4):183-185, Apr. 1983.

A Holistic Approach to Rehabilitation for the Limb-Deficient Child, E.G. Marquardt; (Orthop. Hospital, University of Heidelberg, Schlierbacher Landstr 2002, D6900 Heidelberg, West Germany) Arch. Phy. Med. & Rehab., 64(6):237-242, Jun. 1983.

An Index to Measure the Healing Potential of Ischaemic Ulcers Using Thallium 201, M.E. Siegel (University of Southern California School of Medicine, Los Angeles County USC Medical Center, Rancho Los Amigos Hospital, Downey, California 90242, U.S.A.), C.A. Stewart, F.W. Wagner, Jr. and I Sakimura; Pros. & Orthot. Internat'l., 7(2):67-68, Aug. 1983.

Median Nerve Residual Latency: Normal Value and Use in Diagnosis of Carpal Tunnel Syndrome, G.H. Kraft (Dept. of Rehab. Medicine (RJ-30), University of Washington, Seattle, WA 98195, U.S.A.) and G.A. Halvorson; Arch. Phys. Med. & Rehab., 64(5):221-226, May 1983.

Metabolic and Cardiopulmonary Responses of Older Wheelchair-Dependent and Ambulatory Patients During Locomotion, R.M. Glaser (Laboratory of Applied Physiology, Wright State University School of Medicine, Dayton, Ohio 45435, U.S.A.), C.A. Simsen-Harold and J.S. Petrofsky; Ergonomics, 26(7):687-697, Jul. 1983.

Mobility Device for a Child with Phocomelia, J.L. Zazula (Tufts-New England Medical Center, Rehab. Engng. Center, 171 Harrison Ave., Box 1009, Boston, MA 02111, U.S.A.) and R.A. Foulds; Arch. Phys. Med. & Rehab., 64(3):137-139, Mar. 1983.

Motor and Sensory Ulnar Nerve Conduction Velocities: Effect of Elbow Position, C. Harding and E. Halar (Dept. of Rehab. Medicine, Veterans Administration Medical Center, 4435 Beacon Ave. South, Seattle, WA 98108 U.S.A.); Arch. Phys. Med. & Rehab., 64(5):227-232, May 1983.

Oxygen Consumption of Elderly Persons with Bilateral Below Knee Amputations: Ambulation vs Wheelchair Propulsion, L.L. DuBow, P.L. Witt, M.P. Kadaba (Orthop. Engng. and Research Center, Helen Hayes Hospital, West Haverstraw, N.Y. 10993, U.S.A.), R. Reyes, and G.V.B. Cochran; Arch. Phy. Med. & Rehab., 64(6):255-259, Jun. 1983.

Provision of Assistive Equipment for Handicapped Persons, J. Kohn (Rehabilitation Engineering Center, Children's Hospital at Stanford, 520 Willow Road, Palo Alto, Ca. 94304 U.S.A), S. Enders, J. Preston, Jr. and W. Motloch; Arch. Phys. Med. & Rehab., 64(8):378-381, Aug. 1983.

Reflex Cervical Muscle Spasm: Treatment by Diazepam, Phenobarbital or Placebo, J.V. Basmajian (Chedoke-McMaster Rehab. Center, Box 2000, Station A, Hamilton, ON L8N 3Z5, Canada); Arch. Phys. Med. & Rehab., 64(3);121-124, Mar. 1983.

The Selection of Sports Wheelchairs: How to Choose the Right Chair, B. Gibson, D. Marshall, K. Smith and R. Winn; Paraplegia News, 37(9):25-28, Sept. 1983. (Paralyzed Veterans of America, 5201 N. 19th Avenue, Suite 111, Phoenix, Arizona 85015, U.S.A.)

Survey of 1983 Sport Wheelchair Manufacturers: Getting the Facts Straight, N. Crase; Parplegia News, 37(9):29-40, Sept. 1983. (Paralyzed Veterans of America, 5201 N. 19th Avenue, Suite 111, Phoenix, Arizona 85015, U.S.A.)

Voluntary Anterior Dislocation of the Shoulder: Case Study, B.J. Rosasen and J.A. DeLisa (Associate Chief of Staff/Education (11E), Veterans Administration Medical Center, 4435 Beacon Ave. S, Seattle, WA 98108, U.S.A.); Arch. Phy. Med. & Rehab., 64(7):326-328, Jul. 1983.

The Use of a Four-Channel Electrical Stimulator as an Ambulatory Aid for Paraplegic Patients, T. Bajd (Dept. of Electrical Engng., Edvard Kardelj University, 61000 Ljubljana, Trzaska 25, Yugoslavia), A. Kralj, R. Turk, H. Benko, and J. Sega; Phy. Ther., 63(7): 1116–1120, Jul. 1983.

Walking Cane Designed to Assist Partial Weight Bearing, J. Engel (Hand Surgery Unit, Sheba Medical Center, Tel Hashomer, Israel), A. Amir, E. Messer and I. Caspi; Arch. Phys. Med. & Rehab., 64(8): 386–388, Aug. 1983.

Wheelchair and Occupant Restraint System for Transportation of Handicapped Passengers, H.W. Wevers, Jr. (McLaughlin Hall, Queen's University, Kingston, Ontario, Canada K7L 3N6); Arch. Phys. Med. & Rehab., 64(8): 374–377, Aug., 1983.

Wheelchair Racing: An Important Modality in Acute Rehabilitation after Paraplegia, J.G. Botvin Madorsky (Casa Colina Hospital for Rehab. Med., 255 E. Bonita Ave., Pomona, CA 91767, U.S.A.) and A. Madorsky; Arch. Phys. Med. & Rehab., 64(4): 186–187, Apr. 1983.

Wheelchair Transfer Training for Right Cerebral Dysfunctions: An Interdisciplinary Approach, K.M. Stanton, (Speech Pathology Services, Dept. of Rehab. Medicine (RJ-30), University of Washington, Seattle, WA 98195, U.S.A.) M. Pepping, J.A. Brockway, L. Bliss, D. Frankel and S. Waggener; Arch. Phy. Med. & Rehab., 64(6): 276–280, Jun. 1983.

ORTHOTICS

Electrogoniometry of Post-Surgical Knee Bracing in Running, K.M. Knutzen (Department of Physical Education, Western Washington University, Bellingham, Washington 98225, U.S.A.), B.T. Bates and J. Hamill; Amer. J. Phy. Med., 62(4): 172–181, Aug. 1983.

Plastic Ankle-Foot Orthoses: Evaluation of Function, J.F. Lehmann (Dept. of Rehab. Medicine, University of Washington RJ-30, Seattle, WA 98195, U.S.A.), P.C. Esselman, M.J. Ko, J.C. Smith, B.J. deLateur, and A.J. Dralle; Arch. Phy. Med. & Rehab., 64(9): 402–407, Sept. 1983.

A Practical Dropfoot Brace, J.B. Milner; Engng. in Med., 12(2): 65–68, Apr. 1983. (MEP Ltd, Article Reprint Ser., P.O. Box 24, Northgate Ave., Bury St. Edmunds, Suffolk 1P32 6BW, England).

Splint Therapy for Trigger Finger in Children, Y. Tsuyuguchi (Dept. of Orthop. Surg., Osaka University Medical School, 1-1-50, Fukushima, Osaka, 553, Japan), K. Tada and H. Kawaii; Arch. Phys. Med. & Rehab., 64(2):75–76, Feb. 1983.

Treatment of Congenital Dislocation of the Hip by the Pavlik Harness. Mechanisms of Reduction and Usage, K. Iwasaki (Dept. of Orthop. Surg., Nagasaki University School of Medicine, 7-1, Sakamoto-Machi, Nagasaki City, Japan); J. Bone & Jt. Surg., 65-A(6):760–767, Jul. 1983.

PROSTHETICS

Biomechanics of the Through-Knee Prosthesis, J. Hughes (Director, National Centre for Training and Education in Prosthetics and Orthotics, University of Strathclyde, The Curran Building, 131 St. James' Road, Glasgow G4 OLS, Scotland); Pros. & Orthot. Internat'l., 7(2):96–99, Aug. 1983.

Casting the Through-Knee Stump, E. Lyquist (The Society and Home for the Disabled in Denmark, Prosthetic and Orthotic Department, Borgervaenget 5,2100 Copenhagen Ø, Denmark); Pros. & Orthot. Internat'l., 7(2):104–106, Aug. 1983.

The Early Rehabilitation of Lower Limb Amputees Using a Pneumatic Walking Aid, R.G. Redhead (The Limb Fitting Centre, Roehampton Lane, London SW15 5PR, United Kingdom); Pros. & Orthot. Internat'l., 7(2):88–90, Aug. 1983.

Elastic Suspension Sleeve for Below the Knee Prostheses, J.P. Leimkuehler (Secretary/Treasurer of Leimkuehler, Inc., Cleveland, Ohio, U.S.A.); Orthot. & Pros., 37(1):52–54, 1983.

Four Bar Linkage Knee Analysis, M.P. Greene (Branch Manager, Union Artificial Limb & Brace Company, Greenburg Pennsylvania, U.S.A.); Orthot. & Pros., 37(1):15–24, 1983.

Functional Comparison of Upper Extremity Amputees Using Myoelectric and Conventional Prostheses, R.B. Stein (Dept. of Physiology, University of Alberta, Edmonton, T6G 2H7, Canada) and M. Walley; Arch. Phy. Med. & Rehab., 64(6):243–248, Jun. 1983.

Gait Patterns in Above-Knee Amputee Patients: Hydraulic Swing Control Vs. Constant-Friction Knee Components, M.P. Murray (Kinesiology Research Lab (151), Veterans Administration Medical Center, 500 W. National Ave., Wood, Wisconsin 53193 U.S.A.), L.A. Mollinger, S.B. Sepic and G.M. Gardner; Arch. Phys. Med Rehab., 64(8):339–345, Aug. 1983.

How to Prepare an Article for Publication, C.H. Pritham, and M.J. Quigley; Orthot. & Pros., 37(1):36–44, 1983. (Managing Editor, Orthotics and Prosthetics, National Office, 717 Pendleton Street, Alexandria, Virginia 22314)

Knee Mechanisms for Through-Knee Prostheses, K. Öberg (Biomechanics Laboratory, Munksjöskolan, Box 1030, S-551 11, Jönköping, Sweden); Pros. & Orthot. Internat'l., 7(2):107–112, Aug. 1983.

Planning and Producing Slide Presentations for Orthotics and Prosthetics, S.M. Forsgren (Prosthetics Research Study, Eklind Hall, Room 109, 1102 Columbia Street, Seattle, Washington 98104, U.S.A.) and T.L. Hittenberger; Orthot. & Pros, 37(1):45–51, 1983.

The Rapid Adjust Prosthetic Harness, B. Radocy (President of Therapeutic Recreation Systems, Inc., Boulder, Colorado, U.S.A.) Orthot. & Pros., 37(1)55–56, 1983.

The Seattle Prosthetic Foot—A Design for Active Sports: Preliminary Studies, E. M. Burgess (Prosthetics Research Study, Eklind Hall, Room 109, 1102 Columbia Street, Seattle, Washington 98104, U.S.A.) D.A. Hittenberger, S.M. Forsgren and D. Lindh; Orthot & Pros., 37(1):25–31, 1983.

Socket Design and Manufacturing Technique for Through-Knee Stumps, P. Botta and R. Baumgartner (Balgrist Orthopaedic Hospital, Forchstr. 340, CH-8008, Zurich, Switzerland); Pros. & Orthot. Internat'l., 7(2):100–103, Aug. 1983.

Success Rate of Prosthetic Fitting after Major Amputations of the Lower Limb, J. Steen Jensen (Department of Orthopaedic Surgery U, Rigshospitalet, University of Copenhagen, DK-2100 Copenhagen Ø, Denmark) and T. Mandrup-Poulsen; Pros. & Orthot. Internat'l., 7(2):119–121, Aug. 1983.

Tolerance of Early Walking with Total Contact Among Below-Knee Amputees—A Randomized Test, E. Liedberg (Department of Orthodpaedic Sugery, Lund University Hospital, S-221 Lund, Sweden), H. Hommerberg and B.M. Persson; Pros. & Orthot. Internat'l., 7(2)91–95, Aug. 1983.

The Use of X-Rays and Xerograms in Prosthetics, T.P. Haslam (Medical Center Prosthetics, Inc., Houston, Texas, U.S.A.), M.T. Wilson, M.J. Urlaub and R.M. Borrell; Orthot. & Pros., 37(1): 32–35, 1983.

SPINAL CORD INJURY

The Application of Pelvic Pins in Halo-Pelvic Distraction: An Anatomic Study, J.P. Kostuik (Toronto General Hospital, 101 College St., Toronto, M5G 1L7, *Canada*) and M. Tooke; Spine, 8(1): 35–38, Jan.–Feb. 1983.

The Effect of Spinal Cord Stimulation upon Peripheral Blood Flow in Patients with Chronic Neurological Disease, R.C. Tallis (Dept. of Geriatrics, Royal Liverpool Hospital, Prescot St., Liverpool L7 8XP, London), L.S. Illis, E.M. Sedgwick, C. Hardwidge and K. Kennedy; Internat'l. Rehab. Med., 5(1): 4–9, 1983.

Low-Back Impairment Rating Practices of Orthopaedic Surgeons, R.A. Brand (Dept. of Orthop. Surg., University of Iowa Hospitals and Clinics, Iowa City, IA 52242, U.S.A.) and T.R. Lehmann; Spine, 8(1): 75–78, Jan.–Feb. 1983.

Psychologic Prediction of Duration of Inpatient Spinal Cord Injury Rehabilitation and Performance of Self-Care, J. Malec (Behavioral Medicine, Mt. Sinai Medical Center, 950 N. Twelfth Street, Milwaukee, Wisconsin 53201, U.S.A.) and R. Neimeyer; Arch. Phys. Med. & Rehab., 64(8): 359–363, Aug. 1983.

The Quantitative Assessment of the Influence of Spinal Cord Stimulation on Motor Function in Patients with Multiple Sclerosis, R.C. Tallis (Dept. of Geriatrics, Royal Liverpool Hospital, Prescot St., Liverpool) L7 8XP, London) L.S. Illis and E.M. Sedgwick; Internat'l. Rehab. Med., 5(1): 10–15, 1983.

Reduction of Radiation Dose in Radiologic Examination of Patients with Scoliosis, G. Hellström, L. Irstam (Dept. of Diagnostic Radiology, University of Göteborg, Sahlgren's Hospital, Göteborg S-413 45, Sweden), and A. Nachemson; Spine, 8(1): 28–30, Jan.–Feb. 1983

Sexual Experience and Plasma Testosterone Levels in Male Veterans After Spinal Cord Injury, G. Phelps, M. Brown, J. Chen, M. Dunn, E. Lloyd, M.L. Stefanick, J.M. Davidson and I. Perkash (Spinal Cord Injury Service (128), Veterans Administration Medical Center, 3801 Miranda Ave., Palo Alto, CA 94304, U.S.A.); Arch. Phys. Med. & Rehab., 64(2): 47–52, Feb. 1983.

Spinal Fixator for the Management of Spinal Injury (the Mechanical Rationale) S.M. Rezaian (Western Orthopaedic Inst., 365 Terracina Blvd., Redlands, CA U.S.A.), E.T. Dombrowski and D.N. Ghista; Engng. in Med., 12(2):95–98, Apr. 1983.

Terminology and Measurement of Spondylolisthesis, L.L. Wiltse (2888 Long Beach Blvd., Long Beach, CA 90806, U.S.A.) and R.B. Winter, J. Bone & Jt. Surg., 65-A(6):768–772, Jul. 1983.

SURGERY

Age, Diabetes and Smoking in Lower Limb Amputation for Arterial Occlusive Disease, E. Liedberg, (Dept. of Orthop. Surgery, University Hospital, S-221 85 Lund, Sweden), and B.M. Persson; Acta Orthop. Scand., 54(3):383–388, Jun. 1983.

Ambulation Levels of Bilateral Lower-Extremity Amputees. Analysis of One Hundred and Three Cases, L.J. Volpicelli, R.B. Chambers (Orthopaedic-Diabetes and Amputation Service, *Rancho Los Amigos Hospital, 7601 E. Imperial Highway,* Downey, CA 90242, U.S.A.), and F.W. Wagner, Jr.; J. Bone & Jt. Surg., 65-A(5):599–604, June 1983.

Amputation as a Consequence of Diabetes Mellitus: An Epidemiological Review, J.E. Falkel (Dept. of Physical Therapy and Health Science, Sargent College of Allied Health Professions, Boston University, 1 University Rd., Boston, MA 02215, U.S.A.); Phy. Ther., 63(6):960–964, Jun. 1983.

Choice of Level in Lower Extremity Amputation—Nationwide Survey, B. Ebskov (Danish Amputation Register, P.O. Box 899, DK-2100, Copenhagen, Denmark); Pros. & Orthot. Internat'l., 7(2):58–60, Aug. 1983.

Failures in Through-Knee-Amputation, R. Baumgartner (Balgrist Orthopaedic Hospital, Forchstr. 340, CH-8008, Zurich, Switzerland); Pros. & Orthot. Internat'l., 7(2):116–118, Aug. 1983.

The Healing of Through-Knee Amputations in Relation to Skin Perfusion Pressure, H.C. Thyregod, P. Holstein (*Bredland 3, 2850 Naerum, Denmark) and J. Steen Jensen;* Pros. & Orthot. Internat'l., 7(2):61–62, Aug. 1983.

Life Expectancy and Social Consequences of Through-Knee Amputations, J. Steen Jensen (Department of Orthopaedic Surgery U, Rigshospitalet, University of Copenhagen, DK-2100, Copenhagen 0, Denmark); Pros. & Orthot. Internat'l. 7(2):113–115, Aug. 1983.

Operative Technique in Knee Disarticulation, J. Steen Jensen (Department of Orthopaedic Surgery U, Rigshospitalet, University of Copenhagen, DK-2100 Copenhagen 0, Denmark) and K. Jansen; Pros. & Orthot. Internat'l., 7(2):72–74, Aug. 1983.

Physiotherapy Following Through-Knee Amputation, G. Mensch (Chief Physical Therapist, Physiotherapy Department, Henderson General Hospital, 711 Concession Street, Hamilton, Ontario, Canada L8V 1C3); Pros. & Orthot. Internat'l., 7(2):79–87, Aug. 1983.

The Postoperative Environment of the Amputation Stump, G. Murdoch (Limb Fitting Centre, 133 Queen Street, Broughty Ferry, Dundee, Scotland; Pros. & Orthot. Internat'l., 7(2):75–78, Aug. 1983.

Prediction of Leg Viability and Amputation Level by Fluorescein Uptake, D. Silverman Dept. of Anaesthesia and *Surgery, (7th Floor,* Dulles Building, Hospital of University of Pennsylvania, C400 Spruce Street, Philadelphia, Pennsylvania 19104, U.S.A.) and F.W. Wagner, Jr., Pros. & Orthot. Internat'l., 7(2):69–71, Aug. 1983.

Preliminary Experiences with Laser Doppler Velocimetry for the Determination of Amputation Levels, G.A. Holloway, Jr. (Center for Bioengineering, 310 Harris (WD-12), University of Washington, Seattle, Washington 98195, U.S.A.) and E.M. Burgess; Pros. & Orthot. Internat'l 7(2):63–66, Aug. 1983.

Revascularization Surgery: Impact on Lower Extremity Amputations, A.M. Rosenthal (Lutheran General Hospital, 1775 Dempster St, Park Ridge, Il, 60068, U.S.A.) and N.K. Reddy; Arch. Phys. Med. & Rehab., 64(3):125–126, Mar. 1983.

ADDENDA & ERRATA

Wheelchair Batteries: Driving Cycles and Testing

By James J. Kauzlarich, Ph.D.

Dr. Kauzlarich (with Graduate Research Assistants Vernon Ulrich, Mark Bresler, and Ted Bruning) had originally produced a rather scholarly engineering paper of considerable value to those involved in the design, evaluation, and specifying of power wheelchairs. In the course of adapting the paper for a broader readership within the rehabilitation community, Dr. Kauzlarich devised a table that added dollars-and-cents values to other major battery-type characteristics. We had intended to pull out the original, simpler, table and insert the latter version. . ...but that step was lost in the final days of getting the issue to the printer. The table above (Lead-acid battery characteristics) is the way "Table 1" *on* page 39 of Volume 20, No. 1, was intended to look.

Elsewhere in Dr. Kauzlarich's paper, on page 41, an error appeared in Equation [7]: the dash that should have appeared over the "P" (immediately following "equals" symbol) was omitted. The *cor*rect form of Equation [7] appears below:

$$P_3n_3T_3 + P_2n_2T_2 + P_1n_1T_1 = \overline{P}T$$

Evaluation of A Curb-Climbing Aid for Manual Wheelchairs: Considerations of Stability, Effort, and Safety

By Andrew Y. J. Szeto, Ph.D., and
Roger N. White, M. S.

The definitions printed inside the box rules for Figure 5 and Figure 6 were inadvertently switched during assembly: the same figures, correctly assembled, are presented (page 102).

On page 50, Equation [3] lacks a denominator. The equation should look like this:

$$d_1 = \frac{F_{sc}\,(101.6)}{W} - 48.3$$

On page 56, in Table 6, the right-hand array of time data should have been bracketed below "20.4-cm-high curb". The number shown was 20.2.

TABLE 1
Battery characteristics

	Life	Energy	Cost
	60% depth of discharge 27 degrees C Charge/discharge cycles	20 hour rate 27 degrees C Watt-hour/kg	1982 $/cycle
A. Lead-acid			
1. Automotive	150–250	26–49	.48
2. Deep-discharge wet cell (golf cart)	300–500	26–35	.24
3. Gel cell, deep-discharge	100–300	30–37	.80
B. Nickel-cadmium	500–1000	13–18	.72
C. Nickel-zinc	300–400	44–66	.38*

***estimated**

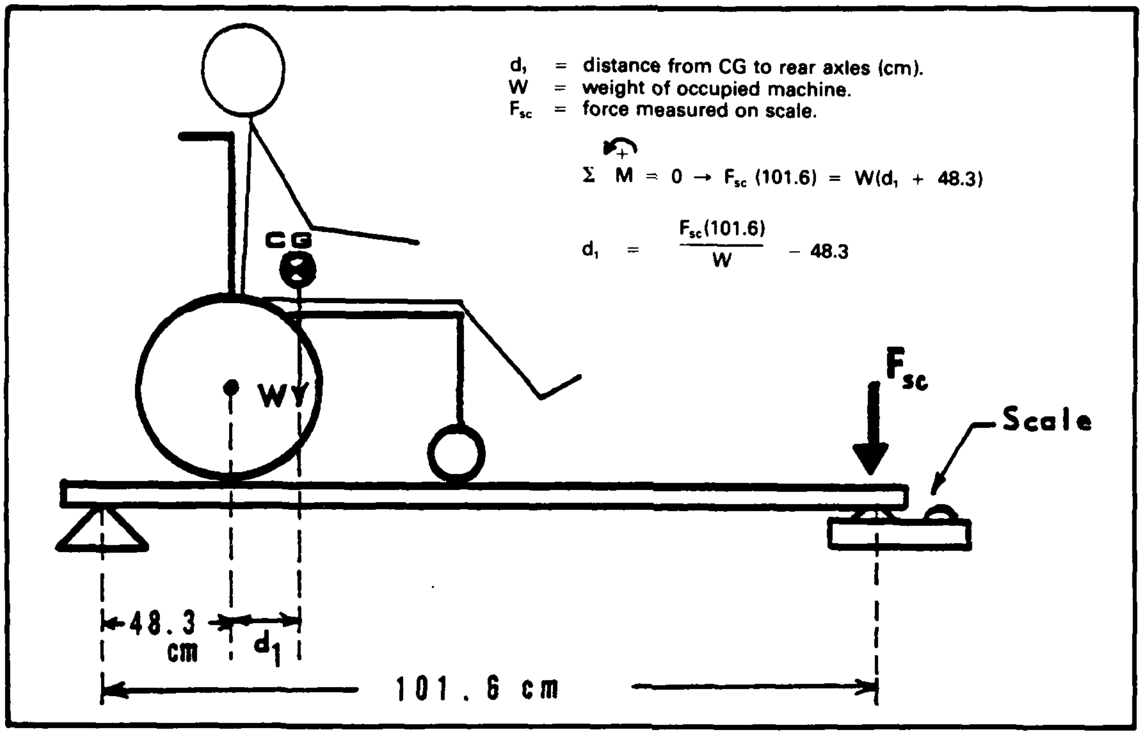

d_1 = distance from CG to rear axles (cm).
W = weight of occupied machine.
F_{sc} = force measured on scale.

$$\overset{\curvearrowleft +}{\Sigma} M = 0 \rightarrow F_{sc}(101.6) = W(d_1 + 48.3)$$

$$d_1 = \frac{F_{sc}(101.6)}{W} - 48.3$$

FIGURE 5
The center of gravity platform used to determine the horizontal position of overall CG. (Note: This schematic drawing has not been drawn to scale).

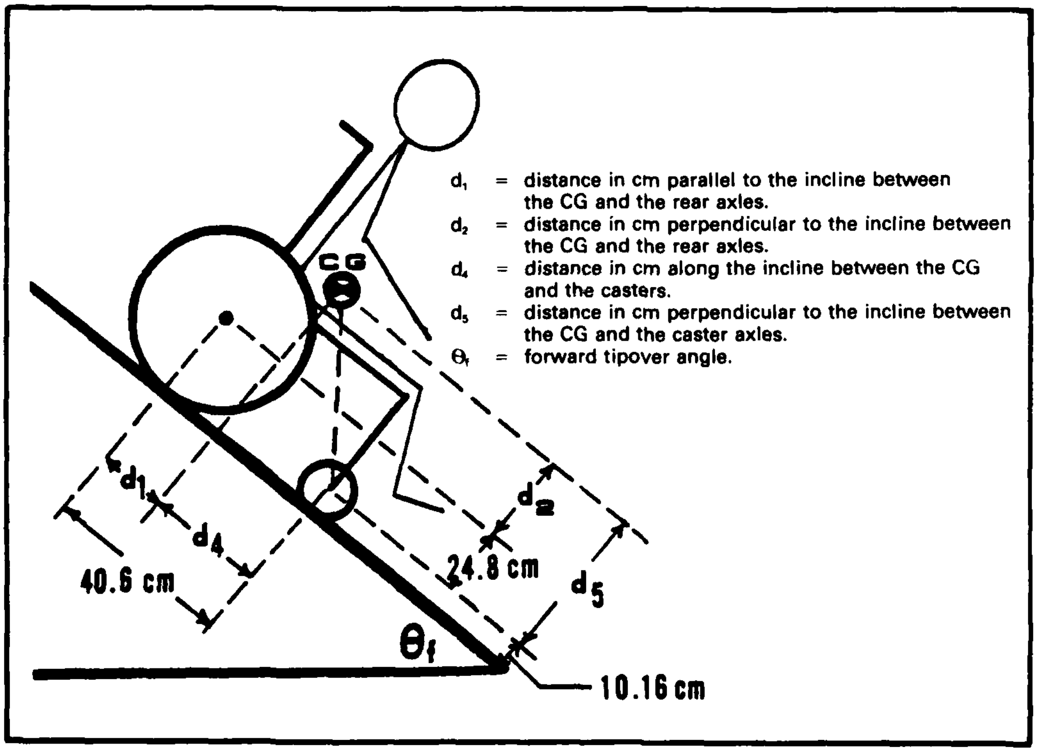

d_1 = distance in cm parallel to the incline between the CG and the rear axles.
d_2 = distance in cm perpendicular to the incline between the CG and the rear axles.
d_4 = distance in cm along the incline between the CG and the casters.
d_5 = distance in cm perpendicular to the incline between the CG and the caster axles.
Θ_f = forward tipover angle.

FIGURE 6.
The static forward tipover angle. The chair will be on the verge of tipping forward when the incline angle is equal to Θ_f.

CALENDAR OF EVENTS

World Congress on Biomaterials, 2nd, and 10th Annual Meeting of the Society for Biomaterials and the 16th Annual Biomaterials Symposium, Washington, D.C., April 27–May 1, 1984. (For information: Samuel F. Hulbert, Society for Biomaterials, 6220 Culebra Rd., San Antonio Texas)

SPIE's Technical Symposium East '84 and Instrument Exhibit, Hyatt Regency Crystal City Hotel, Arlington, Va., April 29–May 4, 1984. (For information: SPIE—The International Society for Optical Engineering, P.O. Box 10, Bellingham, Washington 98227)

Self Help for Hard of Hearing People (SHHH), First Convention, Chicago, Ill., May 1984. (For information: SHHH, 4848 Battery Lane, Suite 100, Bethesda, Md. 20814)

International Conference on Occupational Ergonomics, Harbourcastle Hilton Hotel, Toronto, Canada, May 7–9, 1984. (For information: R.D.G. Webb, Tech. Chrm., Toronto '84, P.O. Box 1085, Station B, Rexdale, Ontario, Canada M9V 2B3)

American Occupational Therapy Association, 64th Annual Conference, Kansas City, Mo., May 7–11, 1984. (For information: AOTA, 1383 Piccard Dr., Rockville, MD 20850)

International Federation of Physical Medicine and Rehabilitation Conference, 9th Congress, Jerusalem, Israel, May 13–19, 1984. (For information: Int'l. Federation of Physical Medicine and Rehabilitation, 9001 W. Watertown Plan Rd., Milwaukee, Wisc.)

American Association for the Advancement of Science, Annual meeting, New York City, May 23–28, 1984. (For informations: AAAS, 1101 Vermont Ave., N.W., Washington, D.C. 20005)

Rehabilitation Internation (RI), 15th World Congress, Lisbon, Portugal, June 4–8, 1984. (For information: RI, 432 Park Ave., South, New York, N.Y. 10016)

World Wheelchair Games (formerly Paralympics), 7th, University of Illinois, Champaign, Illinois, June 12–July 4, 1984. (For information: Prof. Timothy Nugent, Rehab. Education Center, 1207 South Oak St., Champaign, Ill. 61820)

International Games for the Disabled, Sponsored by the International Sports Organization for the Disabled, Nassau County, Long Island, New York, June 16–28, 1984. (For information: Mr. Michael Mushett, Director, 1984 Int'l. Games for Disabled, c/o Special Populations Unit, Eisenhower Park, East Meadow, New York 11554)

CMBEC 10—Biomedical Engineering: The Future of Health Care, Ottawa, Canada, June 17–20, 1984. (For information: CMBEC Secretariat: c/o NRCC, Bldg. M-50, Rm. 147, Ottawa, Canada K1A 0R8)

International Conference on Rehabilitation Engineering, 2nd combined with the 7th Annual Conference on Rehabilitation Engineering (RESNA), Ottawa, Ontario, Canada, June 17–22, 1984 (For information: ICRE II, National Research Council of Canada, Bldg. M-50, Rm. 183 Ottawa, Ontario, Canada K1A, 0R8)

American Physical Therapy Association, 60th Annual Conference, Las Vegas, NV, June 17–24, 1984. (For information: APTA, 1111 N. Fairfax St., Alexandria, VA 22314)

IQEC '84 International Conference on Quantum Electronics, Anaheim Convention Center and Anaheim Marriott Hotel, Anaheim, Ca., June 18–21, 1984. (For information: Optical Society of America, 1816 Jefferson Place, N.W., Washington, D.C. 20036)

CLEO '84, Conference on Lasers and Electro-Optics, Anaheim Convention Center, Anaheim, Ca., June 19–22, 1984. (For information: Optical Society of America, 1816 Jefferson Place, N.W., Washington, D.C. 20036)

Congress of the International Federation of the Hard of Hearing, 2nd., Stockholm, Sweden, June 25–28, 1984. (For information: 2nd Congress IFHOH, Reso Congress Service, S-105-24 Stockholm, Sweden)

International Convention of the Alexander Graham Bell Association for the Deaf, Portland, Oregon, June 26–30, 1984. (For information: Alexander Graham Bell Convention Dept., 3417 Volta Place, N.W., Washington, D.C. 20007)

American Council of the Blind (ACB), National Convention, Philadelphia Center Hotel, Philadelphia, PA, June 30–July 7, 1984. (For information: ACB, 1211 Connecticut Ave., N.W., Suite 506, Washington, D.C. 20036)

Nordic Meeting on Medical and Biological Engineering, Aberdeen and Edinburgh, Scotland, Aug. 11–18, 1984. (For information: BES, Royal College of Surgeons, 35-42, Lincoln's Inn Fields, London, U.K.)

Paralyzed Veterans of America, Annual Convention, New Orleans Hilton, New Orleans, LA, August 13–17, 1984. (For information: PVA, 801 18th St., N.W., Washington, D.C. 20006)

National Rehabilitation Association Conference, Atlanta, Georgia, Aug. 17–22, 1984. (For information: NRA, 633 S. Washington St., Alexandria, VA 22314)

Disabled American Veterans, National Convention, Sheraton Washington Hotel, Washington, D.C. August 26–30, 1984. (For information: DAV, 807 Maine Ave., S.W. Washington, D.C. 20024)

Human Locomotion III, Winnipeg, Canada, Aug. 29–31, 1984. (For information: Dept. of Mechanical Engineering, University of Manitoba, Winnipeg, Manitoba, Canada R3T 2N2)

International Congress on Dentistry for the Handicapped, 7th, Amsterdam, The Netherlands, Sept. 3–8, 1984. (For information: The Netherlands, Convention Bureau, Rivier staete, 166 Amsteldijl, NL 1079 LH, Amsterdam, Netherland)

International Society for Prosthetics and Orthotics, 5th World Congress, London, England, Sept. 3–10, 1984. (For information: ISPO, London Convention Bureau, 26 Grosvenor Gardens, London SWIW ODU, U.K.)

IEEE Engineering in Medicine and Biology Society, 6th Annual Conference: Frontiers of Engineering and Computing in Health Care, Los Angeles Hilton Hotel, Los Angeles, Ca., Sept. 15–16, 1984; immediately precedes the 37th ACEMB, Sept. 17–20, 1984. (For information: Dr. Walter Welkowitz, EMBS Conference, Dept. of Electrical Engng., Rutgers University, Piscataway, N.J. 08854)

American Institute of Ultrasound in Medicine Conference, Kansas City, Mo., Sept. 15-19, 1984. (For information: AIUM Executive Office, 4405 East-West Highway, Washington, D.C. 20014)

International Society for Orthopedic Surgery and Traumatology (SICOT), 16th Congress, London, England, Sept. 30–Oct. 5, 1984. (For information: Conference Services Ltd., 3 Bute St., London SW7 3EY, U.K.)

American Orthotic and Prosthetic Association—INTERBOR International Congress and General Assembly, Fontainebleau Hotel, Miami Beach, Florida, Oct. 17-22, 1984. (For information: AOPA, 717 Pendleton St., Alexandria, VA 22314)

World Council for the Welfare of the Blind, 7th World Assembly, Riyadh, Saudi Arabia, Oct. 19–Nov. 2, 1984. (For information: World Council for the Welfare of the Blind, 58 Ave. Bosquet, 75007 Paris, France)

American Academy of Physical Medicine & Rehabilitation and American Congress of Rehabilitation Medicine, Sheraton Hotel, Boston, Mass., Oct. 21-26, 1984. (For information: AAPM&R-ACRM, 30 N. Michigan Ave., Suite 922, Chicago, Ill. 60602)

International Conference on Medical and Biological Engineering, 14th, Helsinki, Finland, July 7-13, 1985. (For information: Dr. Hiilo Saranummi, Finnish Society for Medical Physics and Medical Engng., P.O. Box 27, 33231, Tampere 23, Finland)

American Association for the Advancement of Science, Los Angeles, California, May 23-28, 1985. (For information: AAAS, 1776 Massachusetts Ave., NW, Washington, D.C. 20036.)

International Rehabilitation Medicine Association 5th World *Congress, Sydney, Australia, Sept.* or Oct. 1985. (For information: Prof. G.G. Burniston, Australian Assoc. of Physical Rehab. Medicine, Prince Henry Hospital, Little Bay, 2036 *Australia)*

NOTICE TO CONTRIBUTORS

We welcome contributions to the Journal. To facilitate publishing, please try to do most of the following.

1. Type double-spaced on one side of 8½" × 11" paper.
2. Leave wide margins on the left and right (1¼ in at least).
3. Include author's name(s) with highest degree, position, organization, and location (full address and zip code).
4. Number your pages visibly.
5. The preferred reference method cites all references by number in the text and lists them numerically at the end of the paper. (This does not preclude your use of authors' names and dates in the text in citing references, if you wish to do so.)
6. Your photographs should have good contrast and be large enough to avoid much enlargement. In general, 5" × 7" or larger glossy prints are desirable. Try to avoid sending color prints or slides, although we will do our best with them if we want the illustration badly enough.
7. Line drawings, charts and graphs, and graphic or numerical printouts to be used as illustrations must be sharp and clear. If you do not wish to send originals (don't ever send unique originals to any publication) please have photostats or direct positives made.
8. Provide a caption for each figure. Number the figures and captions and cite figures by number in the text. Please number your photographs lightly but legibly on the back with a soft pencil, and add author's name and an abbreviated form of the title. Don't paste anything on the back of a photograph.
9. Number your tables and cite them by number within the text. Give each table a short title (with an informative subtitle if required and any necessary comments, notes, or footnotes you feel the reader will require). Type or paste each table on a separate sheet and treat the sheets as part of the manuscript.
10. Obtain and send to us letters of permission to reprint any copyrighted written or illustrative material. The Journal's contents are in the public domain except for material noted in the issue as being under copyright belonging to a specified author or publisher.
11. Where individuals such as subjects or colleagues appear in illustrations, provide us with a copy of a release form signed by that individual (or guardian, etc.); otherwise, we will be required to blank out that individual's face in the photograph.
12. Send original and one copy of complete manuscript. Retain a third copy. Address manuscript and correspondence to:

Editor, Journal of Rehabilitation Research and Development
Office of Technology Transfer (153D)
Veterans Administration
252 Seventh Avenue
New York, N.Y. 10001

Acknowledgement of all manuscripts will be made as promptly as possible.

NOTE: Insert metric (SI) equivalents in parentheses after all measurements expressed in other units.