AEDC-TR-83-40

Uselton

JAN 24 1997.

Captive Trajectory System Test Planning Information for AEDC Supersonic Wind Tunnel (A) and Hypersonic Wind Tunnels (B) and (C)

T. D. Buchanan and W. A. Crosby
Calspan Field Services, Inc.

December 1983

Final Report for Period October 1, 1981 to September 30, 1982

ARNOLD ENGINEERING DEVELOPMENT CENTER
ARNOLD AIR FORCE STATION, TENNESSEE
AIR FORCE SYSTEMS COMMAND
UNITED STATES AIR FORCE

NOTICES

APPROVAL STATEMENT

This report has been reviewed and approved.

Richard Jamer

RICHARD B. JAMER, Major, CF
Directorate of Technology
Deputy for Operations

Approved for publication:

FOR THE COMMANDER

Marion L. Laster

MARION L. LASTER
Director of Technology
Deputy for Operations

UNCLASSIFIED
SECURITY CLASSIFICATION OF THIS PAGE (When Data Entered)

REPORT DOCUMENTATION PAGE

READ INSTRUCTIONS BEFORE COMPLETING FORM

1. REPORT NUMBER
AEDC-TR-83-40

2. GOVT ACCESSION NO.

3. RECIPIENT'S CATALOG NUMBER

4. TITLE (and Subtitle)
CAPTIVE TRAJECTORY SYSTEM FOR AEDC SUPERSONIC WIND TUNNEL (A) AND HYPERSONIC WIND TUNNELS (B) AND (C)

5. TYPE OF REPORT & PERIOD COVERED
Final Report - Oct. 1, 1981 to September 30, 1982

6. PERFORMING ORG. REPORT NUMBER

7. AUTHOR(s)
T. D. Buchanan and W. A. Crosby,
Calspan Field Services, Inc.

8. CONTRACT OR GRANT NUMBER(s)

9. PERFORMING ORGANIZATION NAME AND ADDRESS
Arnold Engineering Development Center/DOT
Air Force Systems Command
Arnold Air Force Station, TN 37389

10. PROGRAM ELEMENT, PROJECT, TASK AREA & WORK UNIT NUMBERS
65807F

11. CONTROLLING OFFICE NAME AND ADDRESS
Arnold Engineering Development Center/DOS
Air Force Systems Command
Arnold Air Force Station, TN 37389

12. REPORT DATE
December 1983

13. NUMBER OF PAGES
46

14. MONITORING AGENCY NAME & ADDRESS (if different from Controlling Office)

15. SECURITY CLASS. (of this report)
Unclassified

15a. DECLASSIFICATION/DOWNGRADING SCHEDULE
N/A

16. DISTRIBUTION STATEMENT (of this Report)

Approved for public release; distribution unlimited.

17. DISTRIBUTION STATEMENT (of the abstract entered in Block 20, if different from Report)

18. SUPPLEMENTARY NOTES

19. KEY WORDS (Continue on reverse side if necessary and identify by block number)
captive trajectory system (CTS)
staging
trajectory analysis

20. ABSTRACT (Continue on reverse side if necessary and identify by block number)

Normally in the development of flight vehicle systems, the staging characteristics have to be obtained experimentally. This report briefly describes the specialized methods used in wind tunnel tests at the Arnold Engineering Development Center in simulating the staging process. The capabilities of the mechanisms and the precision to which the data can be obtained are presented, along with descriptions of typical tests.

DD FORM 1 JAN 73 1473 EDITION OF 1 NOV 65 IS OBSOLETE

UNCLASSIFIED
SECURITY CLASSIFICATION OF THIS PAGE (When Data Entered)

PREFACE

The research reported herein was sponsored by the Arnold Engineering Development Center, (AEDC), Air Force Systems Command (AFSC), Arnold Air Force Station, Tennessee. The results were obtained by Calspan Field Services Inc., AEDC Division, operating contractor for the AEDC. The work was done under Project Number D214PW. Captain Alvin R. Obal and Major R. Jamer (CAF) were the Air Force Project Managers. The manuscript was submitted for publication on August 12, 1983.

CONTENTS

ILLUSTRATIONS

TABLES

1.0 INTRODUCTION

1.1. GENERAL

The vehicle separation capabilities at AEDC in Supersonic Wind Tunnel (A) and Hypersonic Wind Tunnels (B) and (C) have been successfully demonstrated since 1973 using the von Kármán Facility (VKF) Captive Trajectory System (CTS), a six-degree-of-freedom, (DOF), computer-controlled, model support system (Ref. 1). Since that time, numerous test programs including recent supersonic vehicle staging and store separation tests have utilized the CTS in Tunnels A and B (Ref. 2). This separation capability shares a complementary relationship with an existing capability in the Aerodynamic Wind Tunnel (4T) which is a subsonic, transonic, and low supersonic facility (Ref. 3). Together, the two systems provide store separation test capabilities from low subsonic to hypersonic test conditions.

The VKF system is unique in that its six-DOF motion range and load carrying capacity are larger than other systems of this type. These capabilities resulted in the CTS initially being used extensively on Space Shuttle staging tests.

1.2 PURPOSE AND SCOPE OF REPORT

This report is a supplement to Volume III of a four-volume series which covers separation testing at AEDC (Ref. 2). This supplement extends coverage of the CTS capabilities to include tandem and parallel staging techniques, utilization of the system for flow-field mapping tests, and updated information on store and vehicle separation operational techniques. This report, along with Ref. 4, documents a means of designing an efficient CTS wind tunnel test program. It will indicate the information needed by AEDC and when it should be supplied. Experience has affirmed that thorough test planning is essential for the production of high quality data and the efficient use of available test time. AEDC experience and knowledge of simulation techniques and ground test capabilities can greatly aid the User in designing an efficient and successful wind tunnel program. Ideally, close interaction with AEDC will extend from initial problem definition, through detailed test planning, to testing and analysis of data. This will assure the User that the best test technique is being used to meet the testing requirements.

This report discusses the normal procedures and sequence of events for a CTS test program; however, all procedures at AEDC are designed to be adjustable to meet individual User requirements as much as possible.

For further information please contact the Arnold Engineering Development Center/DOFAA, Arnold Air Force Station, TN 37389.

2.0 VON KÁRMÁN FACILITY CAPTIVE TRAJECTORY SYSTEM

2.1 DESCRIPTION OF SYSTEM HARDWARE

The Captive Trajectory System (CTS), a six-DOF model support system, was designed to be used in conjunction with any of the continuous flow wind tunnels, Tunnels A, B, or C. This concept offers a large test capability in that tests can be conducted over an inclusive Mach number range from 1.5 to 10. The system is pictorially shown installed in Tunnel A in Fig. 1 where tests are conducted over the Mach number range from 1.5 to 5.5 and in tunnels B and C (Fig. 2) where tests can be conducted at Mach numbers 6 and 8, respectively. The test sections and model support systems in Tunnels B and C are practically identical. To date, there has not been a requirement for CTS testing in Tunnel C, and the system has never been operated in this tunnel.

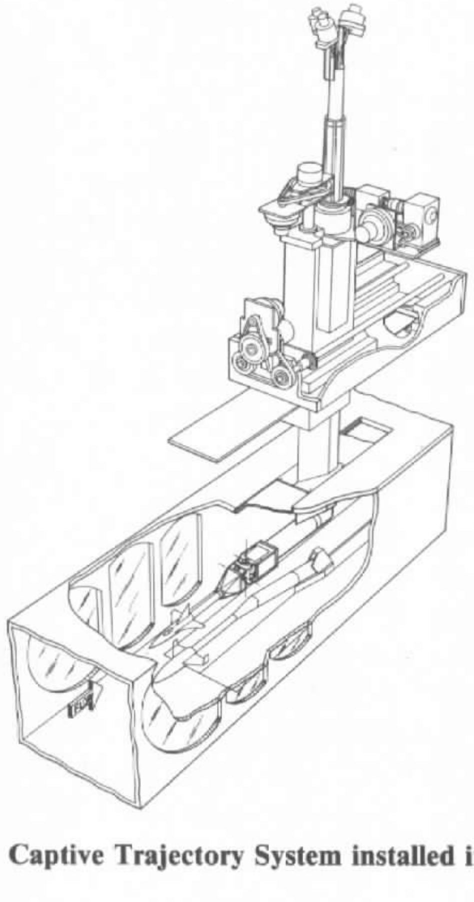

Figure 1. Captive Trajectory System installed in Tunnel A.

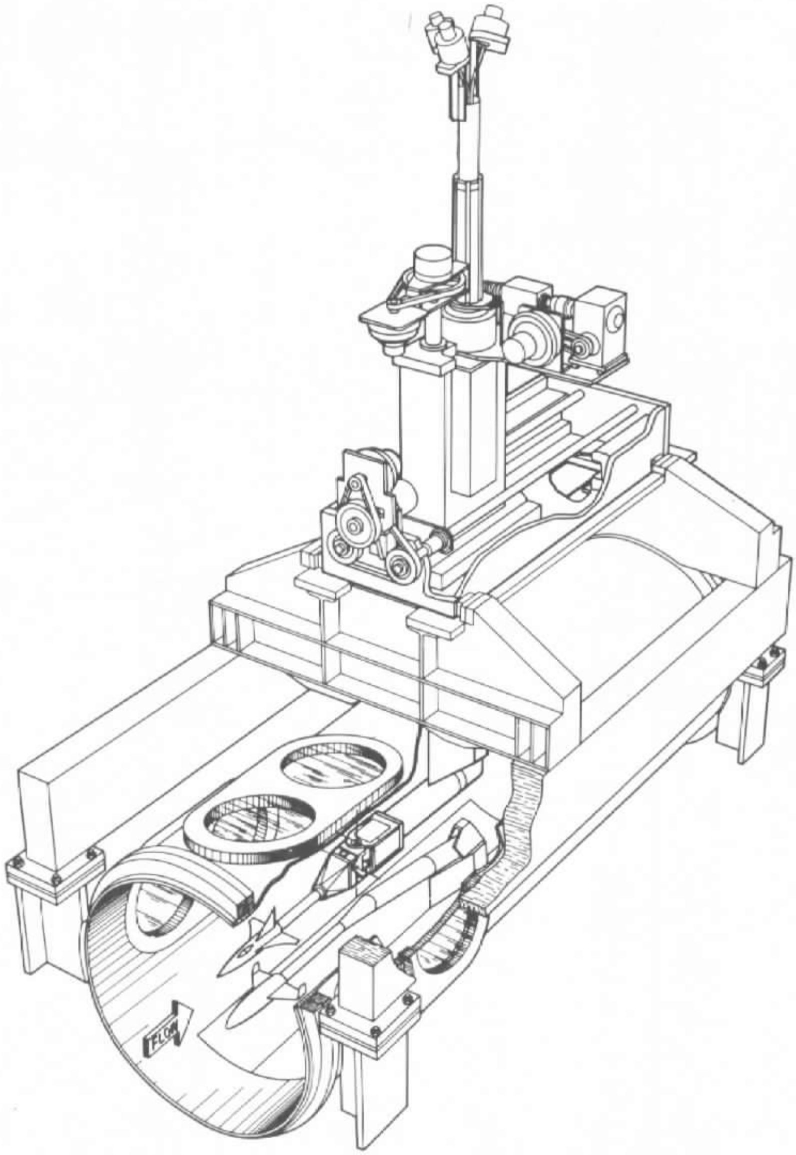

Figure 2. Captive Trajectory System installed in Tunnels B and C.

In Tunnels A, B, C, dual model support tests are typically accomplished using the regular model support system of each tunnel to support the primary model and mounting the staging or store model on the CTS which projects through the tunnel ceilings. The CTS can be transferred from one tunnel to another with a minimum of disassembly. From the centralized control panel (Fig. 3), the system can be operated in manual control or the control can be transferred to the facility DEC-system 10 computer. This computer is a time-sharing digital computer which supports all of the testing activities for Tunnels A, B, and C.

Figure 3. Centralized Captive Trajectory System control panel.

The motion capabilities of the system are shown in Table 1. The motion limits on pitch and yaw are lower when used in Tunnels B or C because of the water cooling jacket that fits over the yaw-pitch-roll head. This restricts the pitch angle to ± 15 deg and the yaw angle to ± 30 deg. This water jacket is not used when the system is installed in Tunnel A which allows the full mechanical capabilities of these drives to be utilized.

Electro-mechanical drives are used on each of the six drives. The axial and vertical motions are obtained by linear ball screw drives equipped with electro-mechanical brakes. A loss of power actuates the brakes on the vertical and axial drives to prevent the system from falling or being moved downstream by aerodynamic drag loads. Utilizing printed circuit motors makes the system control highly responsive. Lateral motion is obtained through a spiroid gear unit by rotating the vertical model support arm and compensating for the resulting yaw with the yaw mechanism. This design was used instead of a linear system to simplify the water-cooling design which is required for Tunnels B and C operation. The length of the support between the two yaw angles can be either 36 or 22 in., and the lateral motion capability described in Table 1 is with the longer support. Lateral motion is reduced to ± 9 in. with the shorter sting because the limit on the aft yaw angle (± 25 deg) then limits the lateral motion. The yaw and pitch motions are obtained through two knuckle joints with axes 90 deg to each other, the pitch axis being upstream of the yaw axis. The most upstream

Table 1. Captive Trajectory System Motion Capabilities

Maximum Travel Limits[1]

Motion	Tunnel A	Tunnels B & C	Maximum[2] Rate of Travel
Axial	±20 in.	±20 in.	1.2 in./sec
Vertical	±15 in.	±15 in.	1.2 in./sec
Lateral[3]	±25-deg	±25-deg	2.7 deg/sec
Pitch	±45-deg	±15-deg[4]	11.7 deg/sec
Yaw[3]	±45-deg	±30-deg[4]	10.4 deg/sec
Roll	±180-deg	±180-deg	20.5 deg/sec

NOTES:
1. Travel limits are set up for each test as a function of model location in the tunnel and the test requirements.
2. The rate of travel of each degree-of-freedom is continuously variable from zero to the rates shown and can be commanded to allow all drives to reach a commanded point simultaneously.
3. Lateral and yaw angular motions combine to provide a maximum lateral displacement of ±15 in.
4. Pitch and yaw are restricted in Tunnels B and C because of the constraints imposed by a water jacket used on the roll-pitch-yaw head in these tunnels.

motion is the roll which, like the pitch and yaw motions, is driven through a flexible drive shaft with a printed circuit motor located outside the tunnel. Dynamic braking is used on these drives to limit travel when power is interrupted. A schematic which illustrates the basic arrangement of these angular motions is shown in Fig. 4.

The CTS load carrying capacity is larger than similar systems designed only for aircraft store separation tests because of its anticipated use for space vehicle staging applications at high supersonic and hypersonic speeds. The load carrying capacity of the system is given in Table 2. The roll shaft is equipped with strain gages to measure continuously the pitching, yawing, and rolling moments at the sting attachment point. The analog signals from these gages are used automatically to stop the drives if either moment exceeds a predetermined value that corresponds to the maximum load.

Systems to safeguard the CTS mechanism, probes, and/or store and parent models from physical damage play an important role in CTS operation and are built-in devices. The CTS mechanism, sting, and model are electrically isolated from the wind tunnel structure. This

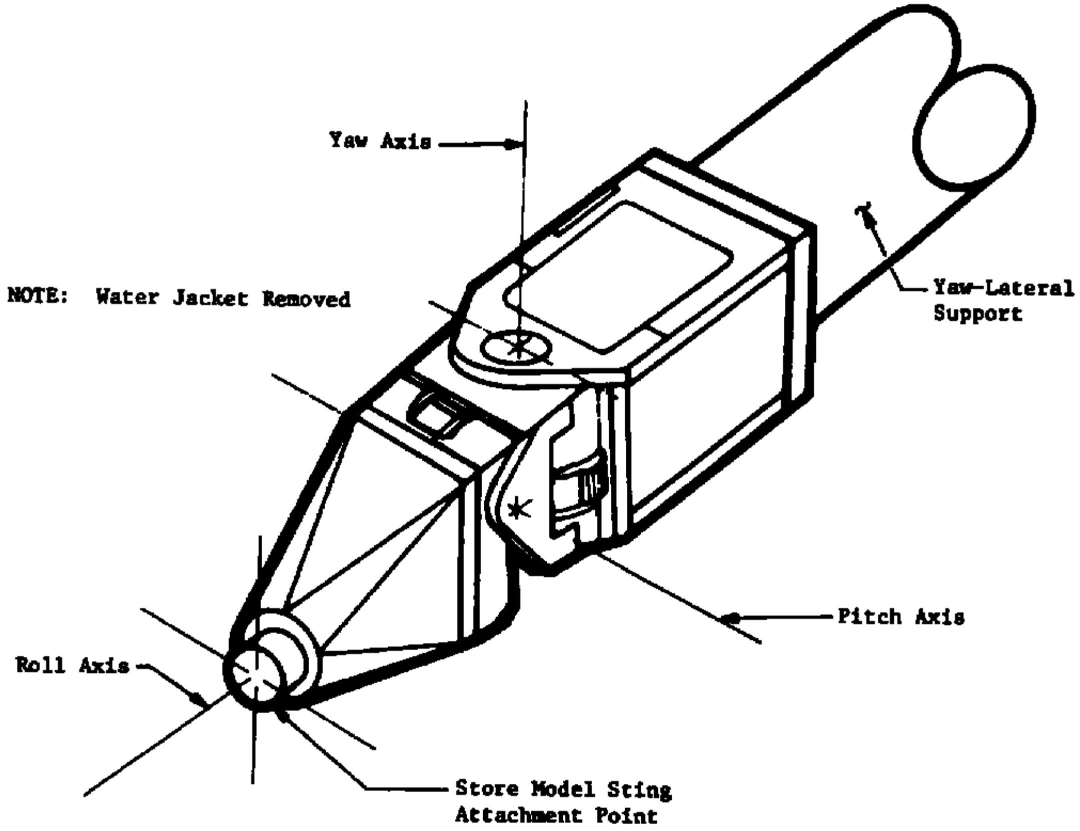

Figure 4. Captive Trajectory System yaw-pitch-roll support.

provides a safety feature in that any contact between the two systems results in grounding the CTS which is used immediately to stop all drives. Also, the drives are stopped if any component on the CTS balance, when one is used, exceeds a predetermined value. These safety features are in addition to the individual mechanical, electrical, and computer count limits on each drive. Two additional electrical limits are used to stop the drives if combinations of up to four different drives exceed a predetermined value. One incorporates the pitch, vertical, and roll drives; the other one uses the yaw, lateral, pitch, and roll drives. A detailed discussion of mechanical, electrical, and computer protection devices is provided in Section 5.0.

The six degrees-of-freedom are sensed by potentiometer outputs which are ready by a multiplexed analog-to-digital converter and then recorded by the DEC-system 10 computer. Table 3 shows the uncertainties in the individual drives along with the attitude and position uncertainties for a typical installation. For example, if the CTS model is pitched and translated vertically, the uncertainty in its vertical position is a function of the uncertainty in pitch angle as well as the uncertainty in the vertical drive.

Table 2. Captive Trajectory System Load Capacity

Load Component	Magnitude	Maximum Allowable Load Location
Pitching Moment	±2200in.-lb	Sting Attachment Point
Yawing Moment	±725 in.-lb	Sting Attachment Point
Rolling Moment*	±100 in.-lb	Roll Axis
Normal Force**	300 lb	8.50 in. Forward of Sting AttachmentPoint
Side Force**	100 lb	8.50 in. Forward of Sting Attachment Point
Axial Force	100 lb	Along Roll Axis

* This is the maximum rolling moment when utilizing roll drive. If roll drive is not required, roll locks can be installed to increase this capacity to ±150 in.-lb.

** These maximum loads will increase or decrease as the model center of pressure moves aft or forward, respectively. Balance capacity may further decrease the allowable loads.

Table 3. Attitude and Position Uncertainties of the Captive Trajectory System for a Typical Installation

Motion	Drive System Uncertainty	Typical Attitude and Position Uncertainties
x	±0.008 in.	±0.050 in.
y	---	±0.080 in.
z	±0.006 in.	±0.060 in.
α	±0.06 deg	±0.10 deg
ψ*	±0.06 deg	±0.10 deg
ϕ	±0.20 deg	±0.20 deg
η*	±0.03 deg	---

* The yaw angles ψ and η are used to obtain both yaw angle and lateral displacement.

The CTS is also equipped with an internally installed high-pressure line which allows high-pressure air (or other gases) to be transferred to the CTS model from outside the tunnel. This feature has been used on numerous tests to simulate rocket motor plumes, interstage venting, etc., during staging maneuvers.

2.2 DESCRIPTION OF SYSTEM SOFTWARE

The CTS computer program directs the mechanism (described in Section 2.1) that positions the store model. The store model position may be a preselected input (grid mode) or a computed result (trajectory mode). In either mode, the model positioning generally requires X_c-Z_c translation of the entire sting plus successive rotations of the various sting radius arms through the appropriate angles (Figs. 5 and 6). These rather complex relationships have been placed in matrix form and are solved numerically by the program which is operational on the DEC-system 10 computer.

In the grid mode of operation, the desired grid matrix is input to the grid program. The program then automatically controls the model positioning and data acquisition.

For the trajectory mode of operation, the computed position is based on a solution of the six-DOF equations of motion for a full-scale store vehicle with the measured (from the balance) and then scaled aerodynamic forces and moments as a primary forcing function. Other important forces and moments can be numerically simulated in the program (gravity, thrust, ejector, etc.) so that a realistic trajectory is "flown" by the captive (restrained) store model. The computed full-scale translation distances are then appropriately scaled to the CTS store and/or tunnel test section dimensions.

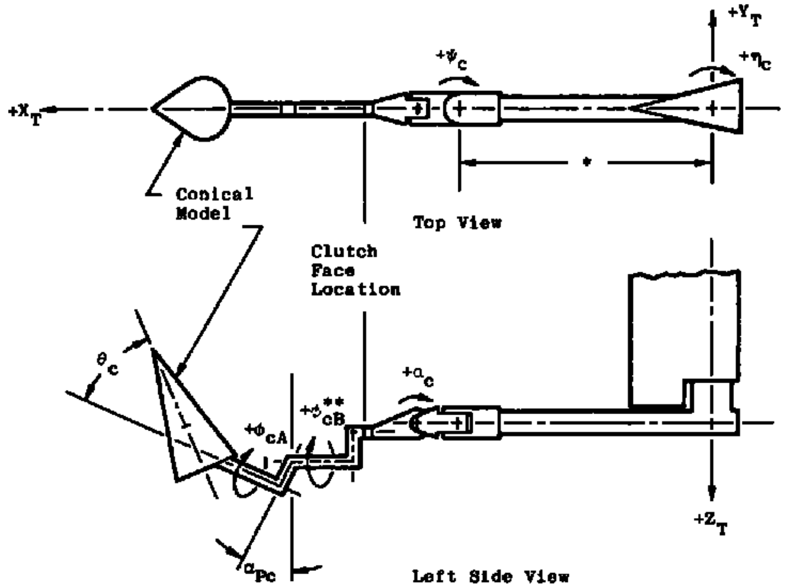

*This arm is interchangeable. Depending upon the test requirements, the 36.007-in. or 21.9995-in. length can be used.

**The roll, ϕ_{cB}, is limited to an offset from the pitch center of 2.0 in. with the present system.

Figure 5. Captive Trajectory System sting mechanism.

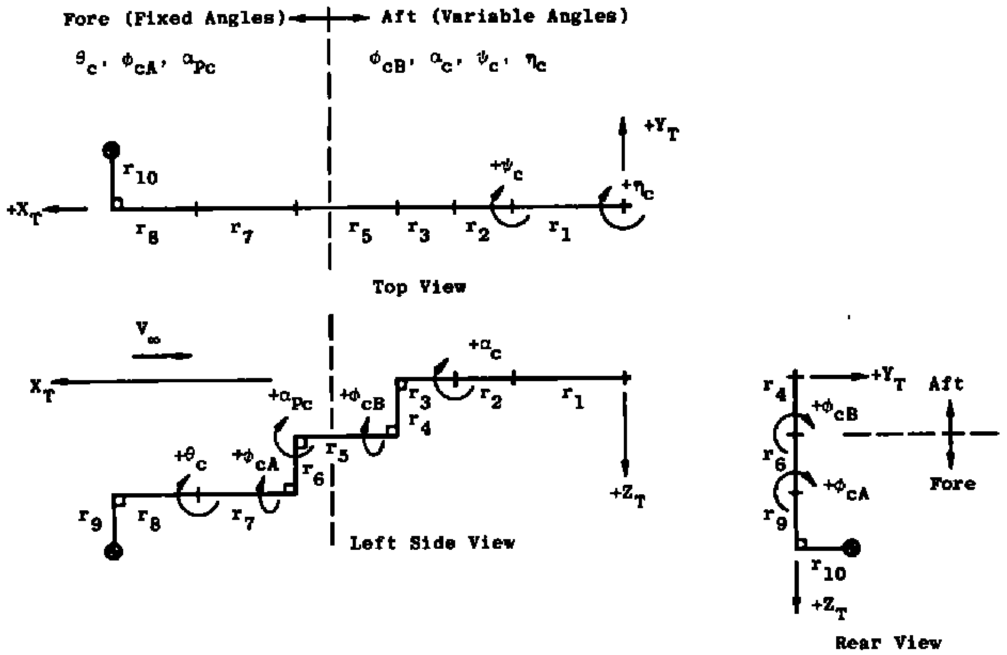

Figure 6. Captive Trajectory System sting angles and rotation arms.

The trajectory generation program can be divided into three primary parts as follows:

1. CTS Model Position-Orientation Equations: These relate the full-scale vehicle position to the model position in the tunnel.
2. Six-DOF Equations of Motion for the Full-Scale Store and Their Numerical Solution: An option to eliminate the roll degree-of-freedom is available.
3. Applied Forces and Moments: These are primary forcing functions for the equations of motion. Static aerodynamic forces and moments are measured by the CTS store balance at points along the trajectory. The other forces and moments (thrust, ejector, etc.) must be numerically simulated.

The CTS trajectory mode equations of motion are essentially the same as those given in Refs. 5 and 6. Additional details of the CTS computer program are discussed in Section 4.0.

3.0 TEST APPLICATIONS

Numerous test programs have been conducted using the CTS in support of the development of spacecraft, missiles, and stores at Mach numbers from 1.5 to 8. Brief descriptions of some of these illustrating the various capabilities of the CTS are given in the following sections.

3.1 PARALLEL VEHICLE STAGING

The CTS has been in operation since 1973 when separation testing was initiated on the NASA Space Shuttle. The Space Shuttle test shown in Fig. 7 was conducted in Tunnel A using the CTS to obtain aerodynamic force and moment data on the mated orbiter/external tank and one of the solid-propellant rocket boosters during simulated staging maneuvers. High-pressure air was routed to the booster model which contained nozzles to simulate the separation motor plumes. A later test, where the orbiter/external tank was mounted on the CTS, investigated the effects of dual solid-propellant rocket boosters (Fig. 8). As in the previous test, high-pressure air was used to simulate the booster separation motion plumes at the front and rear of both boosters.

3.2 TANDEM OR IN-LINE VEHICLE AND MISSILE STAGING

The CTS has been used to accomplish in-line staging as in the case of a missile-booster combinationas shown in Fig. 9. These tests are accomplished by strut-mounting the terminal stage and then maneuvering the CTS-mounted booster stage relative to it. The test illustrated was an advanced Pershing configuration where booster venting was also simulated using high-pressure air as shown in Fig. 10. These tests were conducted in Tunnel B at Mach numbers 6 and 8.

3.3 FLOW-FIELD MAPPING

The CTS has also been used on flow-field mapping tests to map flow fields around aircraft wings and pylons as shown in Fig. 11. A rake consisting of three 20-deg half-angle cone probes was used to obtain upwash and sidewash angles as well as pitot pressures for velocity measurements.

The system has also been used in conjunction with the same type of cone probe on a special support to map the vortex flow field on the leeward side of an ogive cylinder model at high angle of attack. This test installation is shown in Fig. 12.

3.4 STORE SEPARATION

Store separation testing using the CTS began in 1975 with a test in Tunnel A at Mach numbers from 1.5 to 2.5 using the grid matrix mode. This first test in Tunnel A was conducted utilizing generic aircraft and store models to provide experimental data for checking computer codes that had been expanded to include supersonic store separation predictions. These codes required aircraft flow-field (Fig. 11), store pressure distribution (Fig. 13), and store static force and moment measurements (Fig. 14). This work was performed for the Air Force Flight Dynamics Laboratory (AFFDL).

Figure 7. Test installation of a single-booster Space Shuttle staging test in Tunnel A.

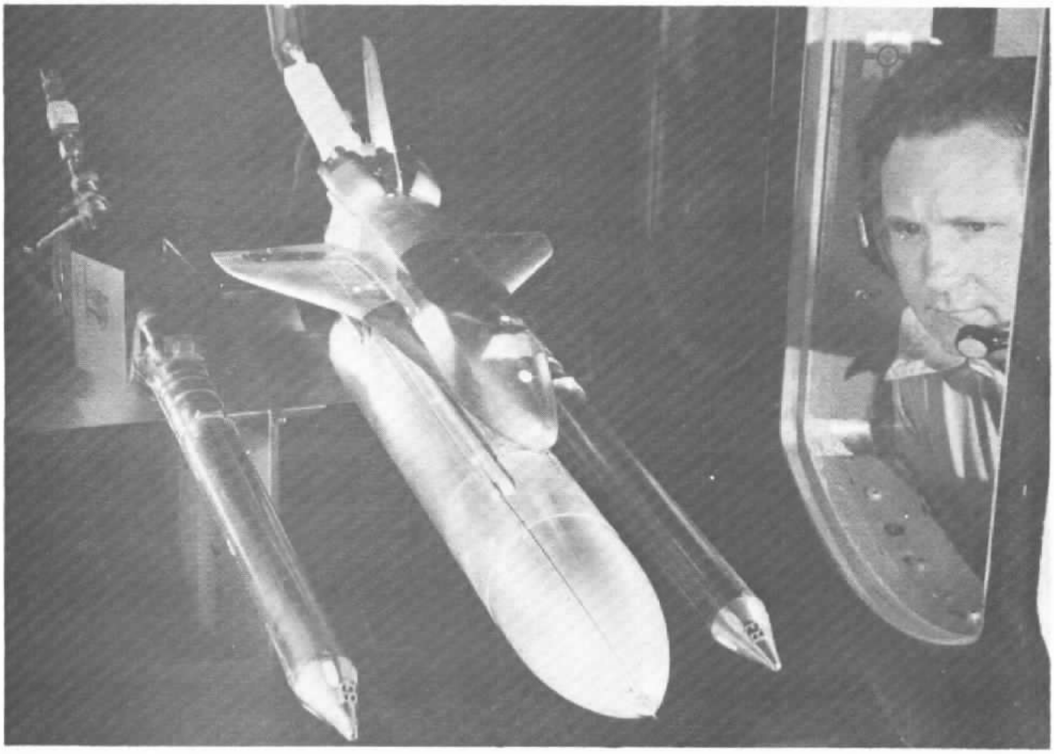

Figure 8. Test installation of a dual-booster Space Shuttle staging test in Tunnel A.

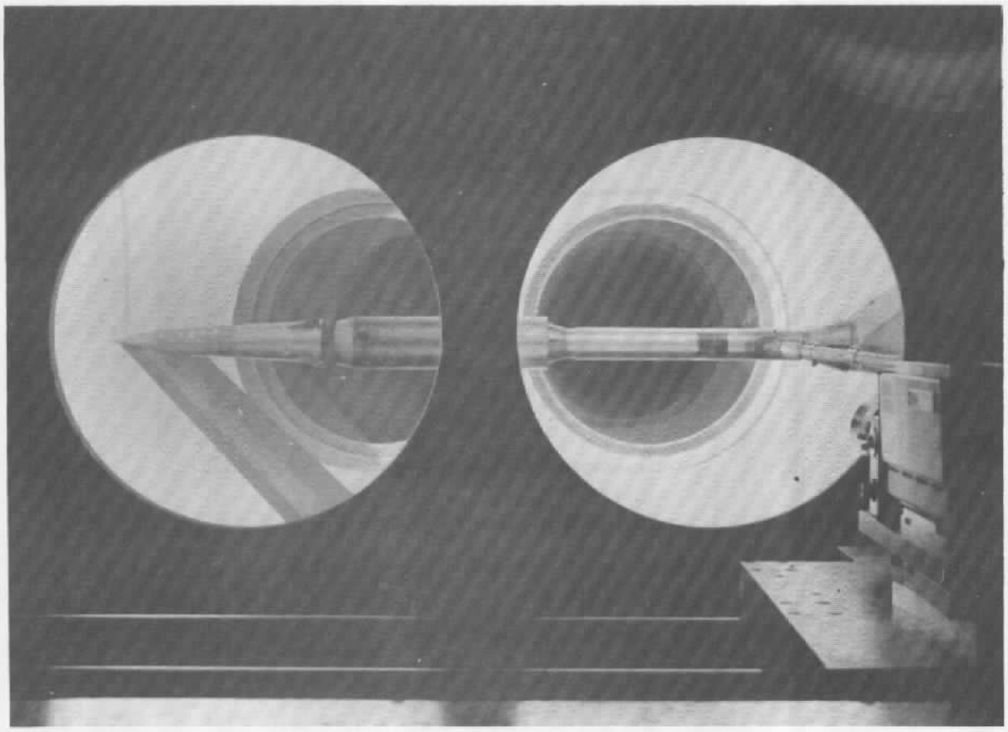

Figure 9. In-line staging test installation in Tunnel B.

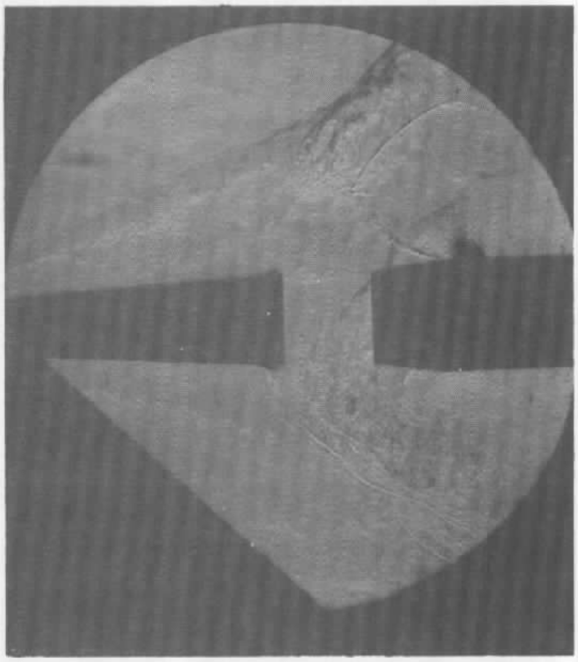

Figure 10. Schlieren photograph showing stage venting interference during in-line staging maneuver.

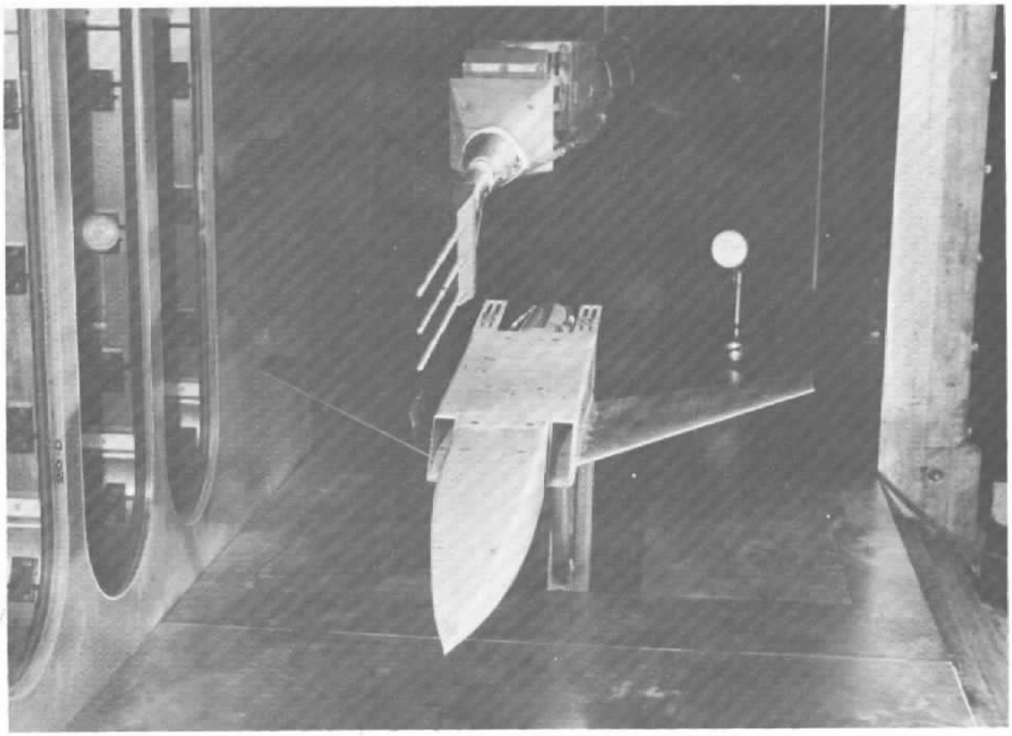

Figure 11. Flow-field mapping test installation using a flow-field rake in Tunnel A.

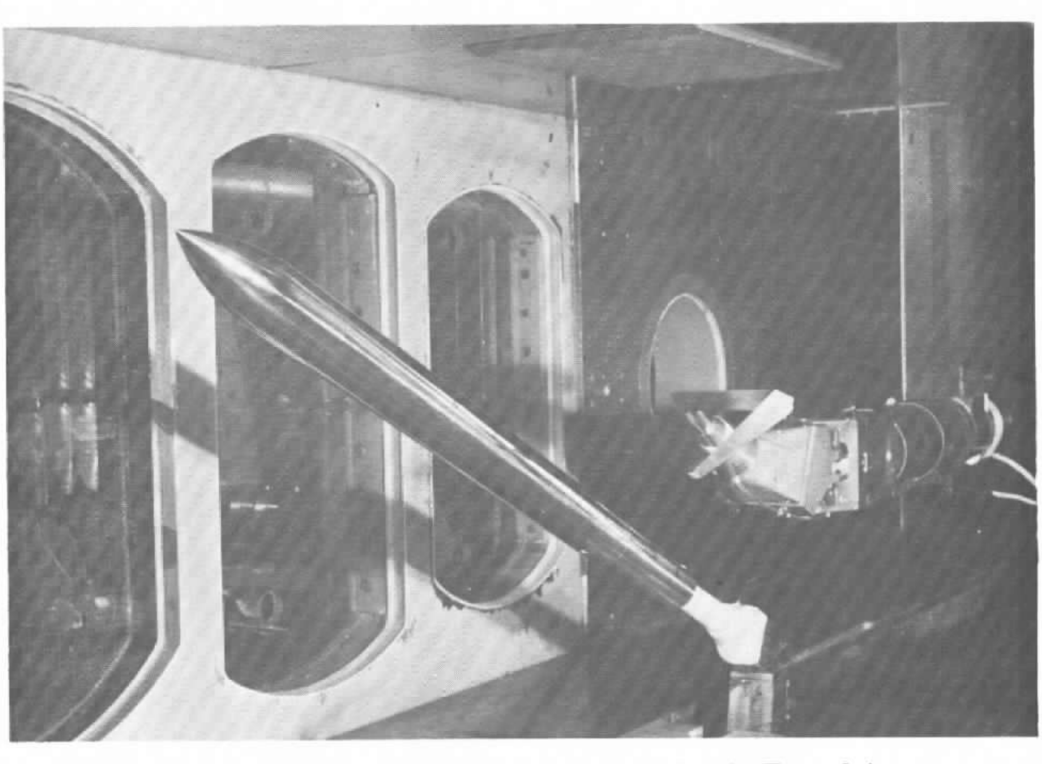

Figure 12. Vortex mapping test installation in Tunnel A.

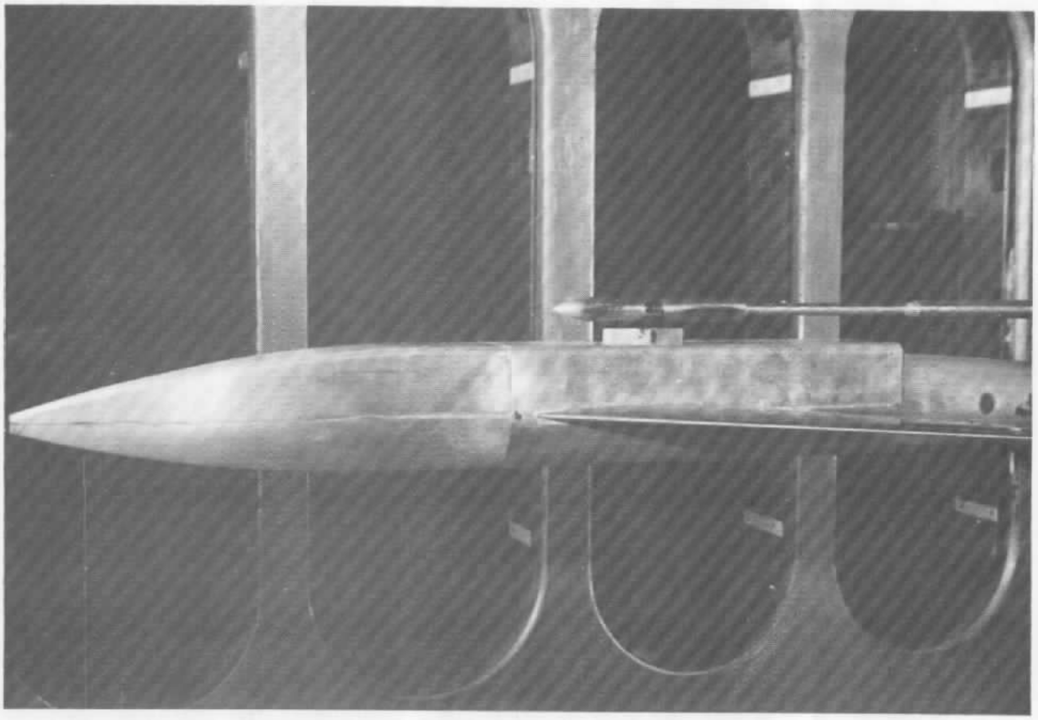

Figure 13. Store model pressure distribution test installation in Tunnel A.

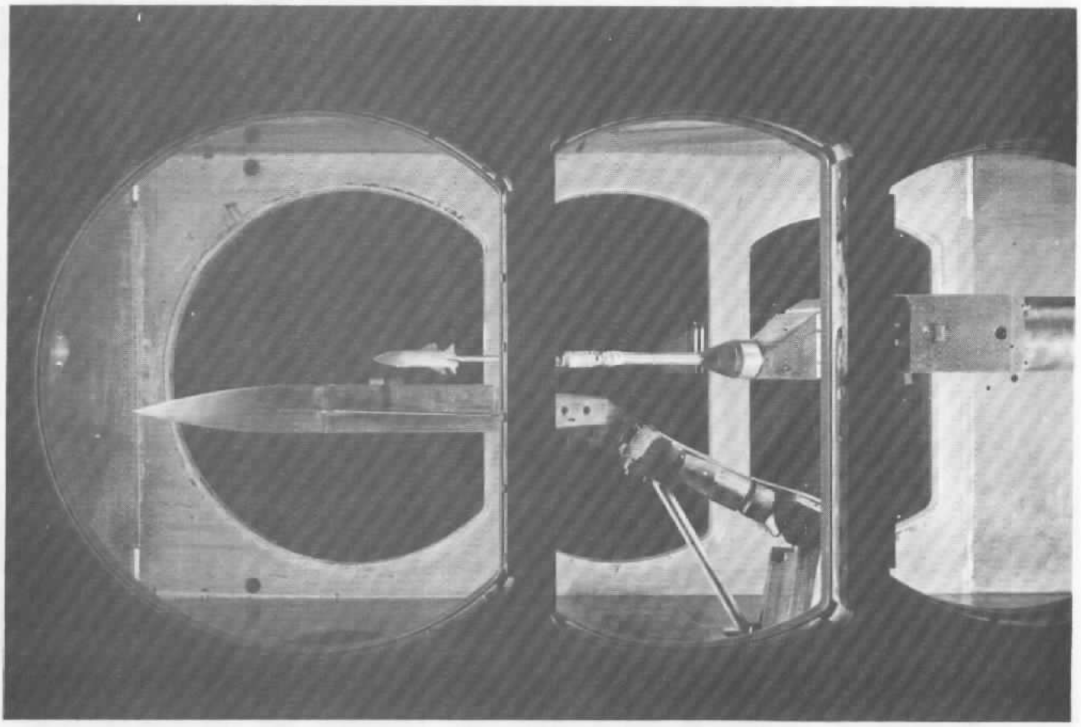

Figure 14. Store static force and moment test installation in Tunnel A.

The requirements for supersonic wind tunnel generated trajectories resulted in the development of a trajectory simulation program for the CTS in 1976. This work was also done in support of the AFFDL test programs. This program utilizes the point prediction scheme of trajectory generation, a scheme which had been used by several facilities for this purpose. The CTS trajectory program was first used in Tunnel A to generate trajectories on a store at Mach 2.

4.0 OPERATIONAL MODES

Since the CTS can be operated in either of *two distinctly different and independent modes*, these operational options (trajectory mode and grid mode) will be described in detail in this section.

4.1 GRID MODE

For the grid mode, the desired grid matrix is selected and loaded into the computer and the positioning of the CTS model is controlled by the computer which automatically records all the data inputs at each grid point location. A grid matrix may be as large as 6 by 40 (each of the six-DOF may have as many as 40 values), but need not be symmetrical. A subgrid system is employed within the grid to combine the various grid values into the required combinations.

Two procedures are available in the grid mode for correction of model sting-balance deflections (Fig. 15). The CTS is under computer control at all times, and, if the tunnel sector were under computer control, it would be a simple matter to adjust the settings of both support systems as they deflected to maintain constant values throughout the grid. Unfortunately, however, the sector is not under computer control, and it would be too time consuming to adjust the sector manually for each point on a grid or trajectory. Furthermore, the sector has no remote yaw control available. Therefore, the following procedures and options are used: (1) Both the parent and CTS model linear displacements are calculated for each nominal point on the grid. The CTS then automatically moves an amount equal to the sum of the deflections of the two models. (2) The parent-model angular attitude is nominally set to the specified position air-on, but will slightly deflect from that position. The parent angle is not corrected for this deflection, but when mounted on a balance the true angular attitude is determined and tabulated. (3) The tunnel User must now specify one of the two following options: (a) that the CTS model attitude be corrected or (b) that the difference between the parent and CTS model attitudes be corrected. An iteration process is used for all of these corrections, and the linear and angular positions are iterated until they are within specified tolerances (normally ±0.050 in. and ±0.1 deg, respectively) of the commanded position. The time required to position the model, iterate the deflections, verify the position, read the instrumentation, and perform all data reduction is only a few seconds per point.

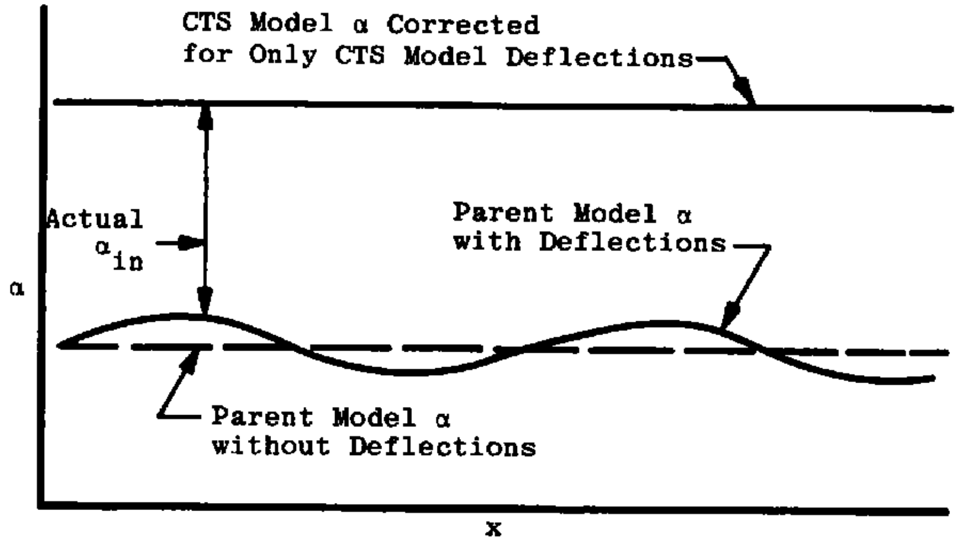

a. Without parent deflection compensation

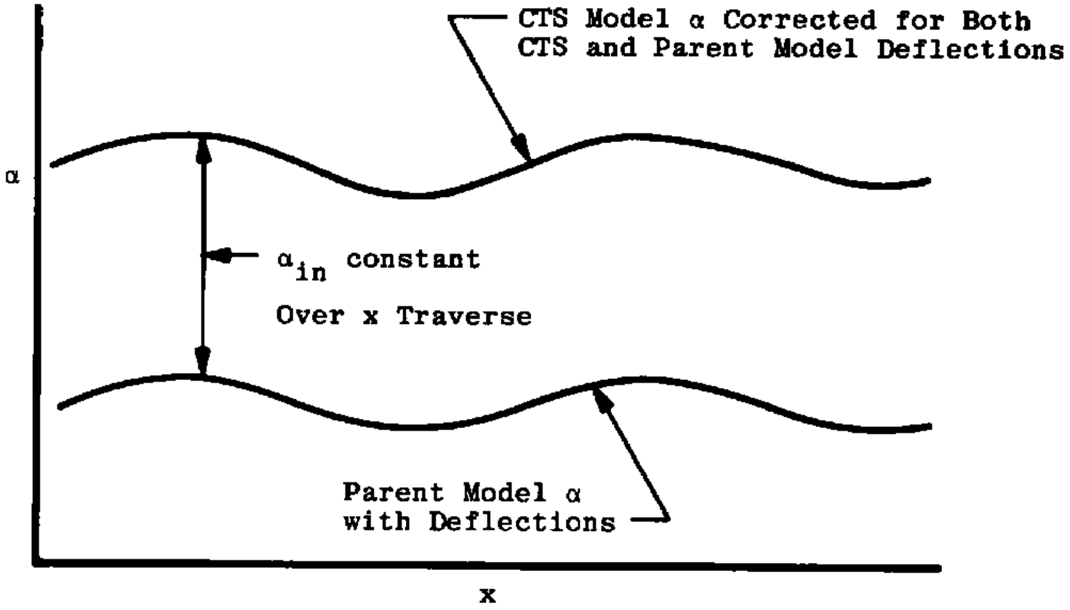

b. With parent deflection compensation

Figure 15. Captive Trajectory System model angle-of-attack variations with and without parent deflection compensation.

To emphasize the fact that the grid mode and trajectory mode are entirely different, it should be noted that a CTS unit is *not* absolutely necessary for grid data acquisition. The conventional tunnel model support system can be manually modified, such as making sting component changes, to position a model or probe at any location in the test section. However, the CTS can position a model much faster than this procedure. As such, the CTS has been employed in numerous tunnel calibration and flow-field mapping tests. Motion boundaries of travel limits are always established to ensure that the CTS model does not hit the tunnel wall (Fig. 16).

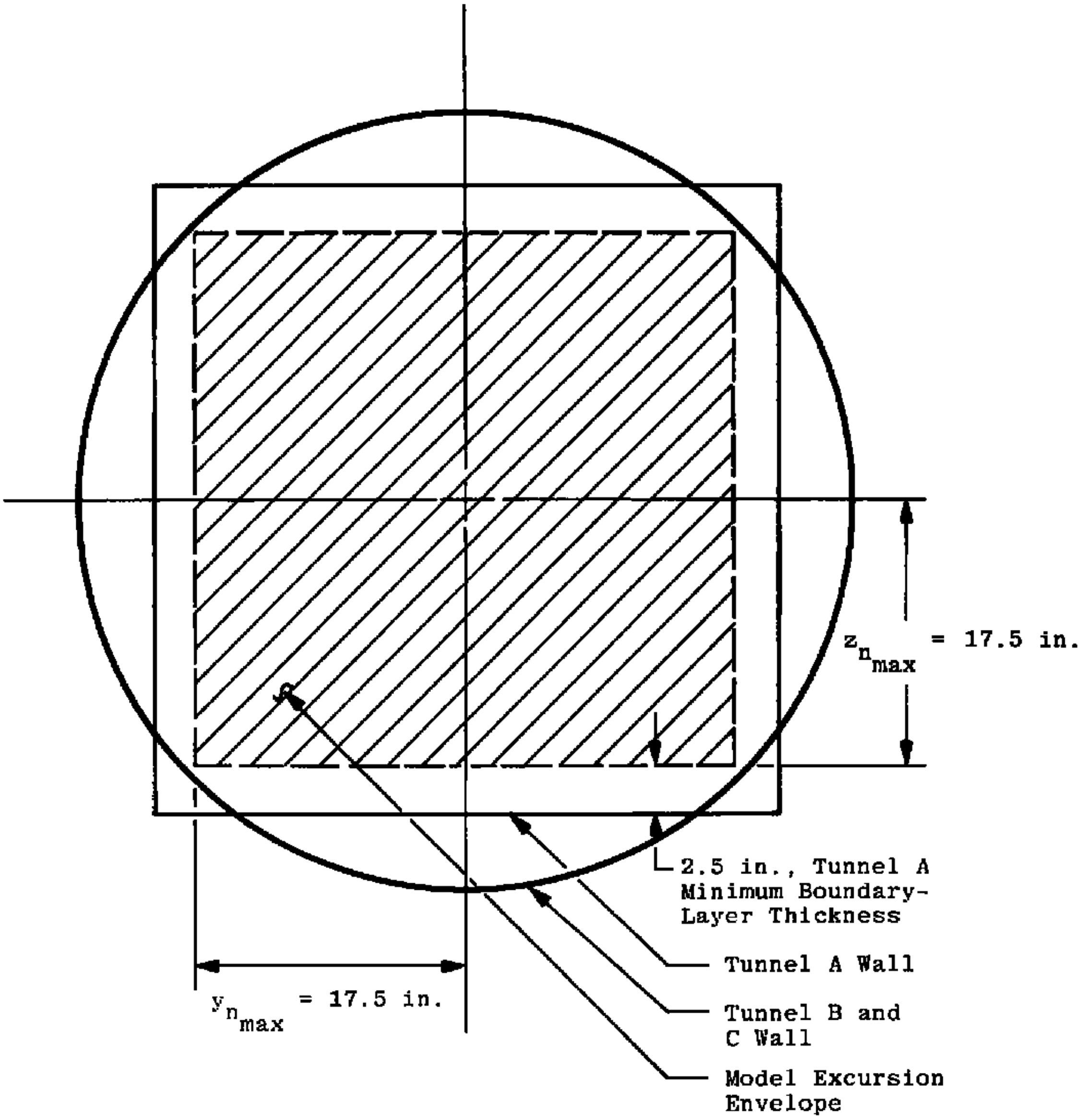

Figure 16. Captive Trajectory System model excursion envelope.

In the grid mode, the aerodynamic forces and moments on the CTS (store) model, including aerodynamic interference of an adjacent parent model, can be measured as a function of the relative position and orientation of the two models. This type of aerodynamic grid data, when properly processed, may be employed for store trajectory computation by any suitable trajectory program (Ref. 5).

The advantage of a grid matrix data base is the independent investigation of the effects of the many trajectory variables such as exact vehicle mass moments of inertia, center of gravity location, and dynamic characteristics on a vehicle trajectory. These variables are not usually very well known in the early development phases of a system, and the usefulness of trajectory data, using fixed values of each variable, can be short-lived.

4.2 TRAJECTORY MODE

This is the most complex operational mode of the CTS. Basically, in the trajectory mode the CTS model position (scaled to tunnel coordinates) is continuously *computed* from the appropriate motion-position equations for the full-scale vehicle.

Generation or simulation of a store vehicle flight path in the interference flow field of an adjacent parent aircraft is an important and unique testing capability of the CTS trajectory mode. A description of the operational procedures for such a test follows.

For a trajectory starting from the launch position (e.g., a wing-mounted pylon), the CTS store model is moved to the launch position by manual inputs to the CTS control console. This launch position is normally the reference point from which store model movement with respect to the parent model is measured. To begin a trajectory at other than the launch point (a postlaunch), it is necessary to specify: first, the coordinates of the new starting point relative to the launch or zero reference point; second, the store velocity components at this point; third, the attitude of the store model at this point; and finally, the time offset at the point.

It is always necessary to specify the initial values of the full-scale store angular rate components and the translational velocity (which may be different from the tunnel flow velocity because of altitude simulation).

Static aerodynamic force and moment measurements are taken at the initial point. These six component measurements are converted to standard aerodynamic coefficients using the tunnel dynamic pressure and model scale reference lengths and area. Full-scale aerodynamic forces and moments are computed from these coefficients in conjunction with the appropriate full-scale dynamic pressure, reference lengths, and reference area. These scaled aerodynamic loads and the simulated thrust and ejector loads, in conjunction with the specified initial velocities, are employed by the program to compute the next point on the trajectory. Aerodynamic coefficients (based on the measured data) are also predicted for the new point which is a linear extrapolation forward in time.

If the computed point is within the CTS travel limitation boundaries (and will not hit the tunnel wall or exceed an individual drive limit), then the CTS moves the model to the computed position taking into account the anticipated deflections and displacements of the CTS model. No parent deflections or displacements are used. If, in the process of driving to the new position, a collision of the CTS model and parent model or their support systems occur, the trajectory is terminated. The CTS mechanism is electrically isolated from the tunnel, and an electrical circuit uses this to control stopping the CTS whenever contact with the tunnel or parent model is made.

If a solid boundary is not contacted, then the predicted position is obtained and the static aerodynamic forces and moments are measured. These forces and moments are then converted to coefficient form and compared to the predicted coefficients. If the measured aerodynamic coefficients are within the specified tolerances (C_{N_T}, C_{m_T}, C_{Y_T}, C_{n_T}, C_{ℓ_T}, and C_{A_T}) relative to the predicted values, then the computed point is considered a valid point on the trajectory and computation begins to determine the next point. If the measured coefficients are not within tolerance, the CTS retreats to the last valid point and computation begins anew, with half the previous prediction interval yielding a smaller motion interval. The checking sequence is repeated until the prediction interval, is reduced to twice the integration interval, at which point the data is accepted and computation continues.

On the other hand, if a specified number (nominally six) of successive valid trajectory points are predicted, the program doubles the prediction interval, thus a consequent reduction in tunnel test time. The maximum size of the prediction interval is limited in the program. The aerodynamic coefficient prediction-checking procedure provides a method of adjusting the motion increment between valid trajectory points. Small steps are required in regions where the aerodynamic forces on the store are changing abruptly, and larger steps are made in regions where the forces are well behaved. The prediction-checking procedure described above is continued until the trajectory is terminated. A trajectory can be terminated in various ways: (1) model contact or exceeding a boundary limit as described previously, (2) exceeding a balance limit, or (3) manual termination at any time.

5.0 CAPTIVE TRAJECTORY SYSTEM PROTECTION DEVICES AND METHODS

There are many cases where collisions of the CTS model with the parent model and its support system and the wind tunnel test section (including optical quality windows) can cause damage to any of these items. The CTS itself can be damaged if its design load capacity is exceeded by the combination of CTS model weight and aerodynamic loading. Several devices and methods have been developed to prevent damage to the CTS support mechanism. Together, these devices and methods should form an effective protection system. They should not be intentionally circumvented or ignored during hasty test planning. For discussion purposes, the devices are placed into three categories; mechanical, electrical, and computer.

5.1 MECHANICAL PROTECTION SYSTEM

There are two mechanical safety devices of the CTS system. These are the CTS mechanical limits and the vertical and axial-drive brake systems.

The mechanical limits are positioned based on specific test requirement within the values of Table 1. These are the outermost CTS single-drive limits used and are set as soon as possible after installation of the CTS in the tunnel. These provide a backup safety device in case of failure of the electrical limits, to be described later. There are two microswitches on each of the six CTS drives which form the mechanical limits. A microswitch is physically placed near both travel extremes expected during the test for each drive and locked in place. Contact by an actuating pin located on the drive causes switch closure which disables all drive motors and illuminates an indicator on the CTS control console.

A brake system is positioned on the CTS vertical and axial drives. The brakes are activated whenever power is removed from the drive motors. This happens when the motors are shut down or in the event of a power failure. The vertical brake is designed to support the weight of the vertical drive column and the components attached to it once power is removed from the drive system. Similarly, the axial brake resists any motion that would be caused by aerodynamic drag on the system if axial-driver power is lost.

5.2 ELECTRICAL PROTECTION SYSTEM

There are a variety of electrical safety devices to be considered when the CTS is operated under either computer or manual control. These are identified as:

1. CTS Drive Single Limits
2. CTS Drive Combination Limits
3. Parent Injection System Interlocks
4. CTS Contact Grounding Circuit
5. CTS and Parent Balance Overload Indicators

Where the mechanical limits are normally set to the largest overall test drive ranges, the electrical single and combination limits should be reset for each test phase, if significant CTS model support geometry changes are made.

When any single or combination limit is reached, all CTS drives are disabled. None of these devices should be a substitute for careful test planning, but they are available for protection against grid errors (setup and input) while in computer control and against manual drive errors when in manual operation.

5.2.1 Single Limits

Each of the CTS drives has both a negative and a positive electrical limit. These limits are set inside of the mechanical limits by adjusting potentiometers located on the CTS single-limit chassis to a predetermined drive-position voltage level. If the level is reached for any drive, all drives are disabled. These limits are easily set and changed.

5.2.2 Combination Limits

CTS model sting lengths, prebend angles, and offset lengths may vary considerably among tests. The mechanical and electrical single-drive limits will prevent any single drive from driving the CTS model or support hardware into the tunnel walls or windows, if all other drives are at zero. However, combinations of drives or uncoordinated drive speeds can potentially cause collisions with the walls or windows. There are four sets of CTS combination limits:

1. Pitch-Vertical
2. Roll-Pitch-Vertical
3. Pitch-Yaw-Lateral
4. Roll-Pitch-Yaw-Lateral

The first two of these provide the vertical plane protection while the last two provide protection in the horizontal plane. All combination limits consider the model support lengths. Note that the pitch-yaw-lateral limit chassis on the CTS console is labeled yaw-lateral, but the pitch angle is also used in setting this limit. Use of the CTS drive-speed controller should eliminate collisions caused by uncoordinated drive speeds.

The combination limits are determined by establishing a safe operating envelope inside the tunnel test section in the yaw and pitch planes. This envelope is always rectangular even in Tunnels B or C which have a circular test section. The pitch-vertical and pitch-yaw-lateral combination limits are set on all CTS tests. The pitch-vertical limit is based on α_c, z_c, and sting length. The pitch-yaw-lateral limit is based on α_c, ψ_c, η_c, and sting length. If the model/sting has any prebends or offsets from the CTS roll centerline, the roll-pitch-vertical (based on ϕ_c, α_c, z_c, and sting length) and roll-pitch-yaw-lateral (based on ϕ_c, α_c, ψ_c, η_c, and sting length) limits are also set, even if roll is not planned. These limits are also set by dialing potentiometers located on the CTS combination-limit chassis until a predetermined voltage level is obtained. The settings require measurements to the model nose for these limits, not to the grid reference point.

5.2.3. Grounding Cirucit

The mechanical and electrical limits are designed to prevent the CTS model or support from being driven into the tunnel walls or windows. They cannot prevent the CTS model from impacting the parent model or its support system. Currently there is no such safety device. These collisions are normally avoided by careful test planning and grid layouts with the CTS in computer control. However, this practice can fail for several reasons. Unanticipated CTS motions between grid points in the vicinity of the parent model, larger than expected deflections at the start of a grid, and manual CTS operation can all cause CTS collisions with the parent model. To reduce the severity of such collisions, an electrical grounding circuit was built into the CTS mechanism.

The CTS mechanism including the CTS model, sting, and instrumentation is electrically isolated from the tunnel test section, parent model, and parent model instrumentation. An elevated d-c voltage is applied to the CTS hardware. Any contact between conducting parts of these systems completes the electrical circuit, causing all CTS drives to be disabled, and activates the CTS GROUND light on the CTS console. Deactivation of the drives automatically sets the brakes on the vertical and axial drives and activates the dynamic braking of the motors on the yaw, pitch, and lateral drives. The disabled drives can be reactivated using an override function push button, after which the CTS can be driven out of the grounded condition.

Caution should be exercised when using any nonconductive model parts or support hardware where these two systems can make contact. Contact with any nonconductive material including the tunnel windows will allow the CTS drives to continue operation and possibly cause severe damage. A bent model fin or nose could go unnoticed during a test, but have a large effect on the test data.

The grounding circuit has been used in the air-on docking procedure. It has been used to indicate model contact at the "touch point" during docking. The CTS model is then driven off the ground some specified distance to the Initial-Conditions point, which is the basis for the model relative positioning during a grid sequence. With the further development of remote docking sensors, this practice will be eventually discontinued.

CTS GROUND indications can result from invalid causes which also disable the drives and prevent operation under computer control until the cause is found and remedied. For example, insulation in the roller bearing which supports the sliding seals covering the tunnel opening for the CTS can fail, causing such a ground. In this case the wind tunnel must be shut down while the bearings are being replaced, and valuable test time is lost. Generally, however, the grounding circuit performs a necessary protection function without benefit of an independent backup system.

5.2.4 Parent Model Injection System Interlocks

An inject interlock system is used to protect the CTS model/support system and parent model/support system during the parent model injection/retraction process. This process includes translation of the parent model system upstream or downstream in Tunnel A. The hydraulic injection and translation systems cannot be electrically disabled in the event of a collision. Therefore, collisions during injection/retraction must be completely eliminated using the interlock system. It should be noted that the hydraulic translation system in Tunnel A is typically used on CTS tests because of its superior position repeatability compared with the electrical drive system.

The CTS interlock circuit consists of a series of microswitches, key interlock switches, and relay contacts whereby different switch configurations permit interlock function variations. With the CTS mounted on the tunnel, the tunnel inject/retract mechanism cannot be operated until certain approval conditions are met by the CTS console. These approval conditions require the CTS model to be stored in a "home" position where a safe injection/retraction sequence can occur. All six CTS drives have a "home" position which must be satisfied before inject/retract approval is obtained. These positions are adjusted on a test phase basis and are determined by tunnel test personnel as early as possible during installation before any injection sequences are allowed. All expected parent model injection and retraction attitudes must be considered when determining this "home" position.

5.2.5 Captive Trajectory System Roll Shaft Gages

The CTS overload protection is provided by strain-gage indications of pitching, yawing, and rolling moments. These gages are located on the CTS roll shaft, about 1.95 in. aft of the roll clutchface. The gage outputs are electronically resolved into the CTS (tunnel) axes, regardless of the CTS roll position. The CTS design limits referenced to the centerline of the roll clutchface are 2,200, 725, and 100 in.-lb for the pitching, yawing, and rolling moments, respectively. The limits referenced to the strain-gage locations are given below:

Component	Limit, in.-lbs	Limit Reading, counts
Pitching Moment	2781	7713
Yawing Moment	925	2561
Rolling Moment	100	1823

The gage readings are displayed in counts on the CTS console. Thumbwheel switches are provided near the displays to adjust the corresponding limit level. Values up to the design limits can be set using these switches for a particular test requirement. However, the limit readings are not to be exceeded. When any limit load is reached, a light will be activated near the limit displays, and all the CTS drives will be disabled. Afterward, the override push button must be used to allow motion of the CTS away from the overload condition.

Currently, only eight channels of force and moment data from the CTS system may be monitored. So, if a six-component CTS balance is used, only two of the three roll shaft gages may be monitored. Any two of them may be chosen, depending upon expected loads. Typically with symmetric CTS models, the yawing and pitching moments are chosen. If all three moments are expected to be large, other provisions must be made to protect the CTS from overload.

5.2.6 Captive Trajectory System Balance Overload Protection

A protection circuit exists to monitor the six CTS balance-gage outputs and to prevent their overload due to aerodynamic loads, model loads, or even impact loads. Overload limit count levels, obtained using information found in the balance check calibration report, are input using the thumbwheel switches located below the corresponding balance-gage display on the CTS console. When any limit is reached, all CTS drives are disabled, and an indicator light and warning buzzer are activated. An appropriate course of action must then be determined, usually begun by reducing CTS model attitude manually, after enabling the drives with the override push button. Test conditions may need to be reduced, or model attitude may have to be limited to avoid overloads before resuming the test.

5.3 COMPUTER PROTECTION DEVICES

The CTS GRID program has three routines designed to protect the system while computer controlled operation is underway. Inputs for these are made on a test phase basis, or whenever significant model/sting geometry changes are made. They are as follows:

1. Wall Check
2. Min-Max Limit Check
3. "N-Step" Option

This combination of devices and methods should effectively eliminate tunnel wall collisions. Many of the limits require resetting whenever significant CS model/sting geometry changes are made. None of these will eliminate collisions between the CTS and parent models/supports during CTS motion. Careful test planning is required to lower the number of these collisions successfully. Only the grounding circuit can automatically reduce the collision impact. Note, however, that this device works only for metal-to-metal contact; so, careful planning in this area is essential.

5.3.1 Wall Check

The Wall Check is meant to keep the CTS model within a 35-in.-square envelope in the CTS Y-Z plane on any grid point. Five points are defined to locate the model extremities. The locations of each of these points in the tunnel are predicted before any computer drive command. Any grid point predicted to lie outside the 35- by 35- in. square shown in Fig. 16 is rejected. The program will print a WALL CHECK LIMIT message and automatically proceed to the next point, if the limit is exceeded.

During program execution the CTS axes Y and Z coordinates of each model are predicted for the next grid point prior to driving to that point. The following check is then made, for $n = 1$ to 5,

$$-17.5 < Y_n < 17.5$$

$$-17.5 < Z_n + Z_c < 17.5$$

If any of the five points will violate these limits, a WALL CHECK LIMIT is printed and the program proceeds to the next grid point. *Note that the Wall Check cannot limit model position during motion between grid points, but only at the requested grid point.*

5.3.2 Min-Max Limit Check

The Min-Max limits are the computer equivalent of the electrical single limits previously described and are individual drive limit count values specified in the computer inputs. They are normally set somewhat inside of the electrical single limits. Before diriving to any grid point, the final drive position count levels are predicted and compared to the input limits. If the limits will be exceeded, the predicted point is rejected, a MIN-MAX LIMIT CHECK is printed, and execution continues at the next grid point. Computer control is maintained without the need for operator intervention. Hence, there are several advantages of setting limits inside of the electrical limits, which do not interrupt computer control or require intervention once exceeded.

5.3.3 "N-Step" Option

The "N-Step" option is a means of *smoothing* CTS motion between grid points to reduce collisions caused by uncoordinated drive speeds. Use of the automatic and manual "N-Step" capability is totally optional since the CTS drive-speed controller is now functional. With the advent of the controller, the "N-Step" option should not be required under normal circumstances.

5.4 SUMMARY

Several devices are available to protect the CTS and parent model systems during checkout and testing. The coordinated use of these should provide adequate, though not foolproof, protection with the CTS in either manual or computer operation. The following table summarizes the devices described here:

Name	Operational Mode[1]	Type[2]	Disables Drives?	Function
Mechanical Limits	MC	M	Yes	Limit Excursion of Single Drives
Vertical Brake	MC	M	---	Prevent Vertical Fall in Case of Power Loss
Axial Brake	MC	M	---	Prevent Axial Motion in Case of Power Loss
Single Limits	MC	E	Yes	Limit Excursion of Single Drives
Combination Limits	MC	E	Yes	Prevent Collisions with Tunnel Walls
Grounding Circuit	MC	E	Yes	Prevent Damage during Collisions of CTS with Metal Surfaces
Inject Interlocks	MC	E	---	Prevent Collisions between CTS and Parent Models/Support Systems during Injection
Roll Shaft Gage	MC	E	Yes	Prevent CTS Drive Overload
Balance Overload Indicators	MC	E	Yes	Prevent Balance Overload
Wall Check	C	C	No	Prevent Wall Collisions at Grid Point
Min-Max Check	C	C	No	Limit Single Drives
"N-Step" Option	C	C	No	Smooth Out CTS Motion

Notes: 1. MC = Manual and Computer, C = Computer Only
2. M = Mechanical, E = Electrical, C = Computer

6.0 USER GUIDELINES

6.1 CAPTIVE TRAJECTORY SYSTEM CAPABILITIES

The general data acquisition capabilities of the CTS are described in Sections 2.0 and 4.0. The basic physical capabilities of the system are given in Section 2.1 and are listed in Tables 1, 2, and 3.

The CTS load-carrying capacities given in Table 2 are larger than similar systems designed just for aircraft store separation. This design capability was based on anticipated uses of the system in space vehicle staging applications.

Along with the basic capabilities of the CTS system, additional systems have been provided to further advance the capabilities of the CTS. These additional systems are described in the following paragraphs.

Jet and rocket plume simulation are available for the sector-mounted (parent) model. This simulation is also available for the CTS model by a high-pressure gas line provided in the CTS strut. It is sized for flowing gas at a maximum of 2 lbm/sec at 450°F at a supply pressure of 1,500 psia. The line terminates in the test section at the end of the vertical strut. A flexible line then carries the gas to the model.

For tests in which the CTS model will be used for obtaining pressure data, the capability of using one of three different pressure instrumentation packages is available.

1. One package consists of twenty 15-psid transducers mounted on top of the tunnel. The capability of measuring 19 pressures is available (one transducer is for measuring a variable reference pressure which, when applied to the other transducers, allows pressures up to 30 psia to be measured). The accuracy of each of these transducers is within a ±0.0075 psi or ±0.25 percent of the measured pressure, whichever is greater. To use this package, approximately 20 ft of pressure tubing is required which requires a relatively long stabilization time.

2. A limited number of miniature electronically scanned pressure sensors are available for use. Each pressure sensor contains 32 transducers, an electronic scanner, an analog amplifier, and an integral pneumatic switching valve. The valve is used to switch the 32 transducers from either the model pressures or to a common calibrate manifold. The pressure sensor modules are nominally 2.5-in. long by 2.0-in. high by 1.0-in. wide with the internal volume of each transducer

approximately 0.0004 in.^{3} When model geometry permits, these pressure sensors may be mounted onboard to reduce model pressure stabilization time greatly. Approximately 16 in. of pressure tubing is required. Pressure ranges presently available are ±2.5 and ±15 psid, full scale. The accuracy of the sensors is 0.15 percent of full-scale pressure rating. Accessibility to the package is very limited during tunnel operation, if the package is located inside the tunnel.

3. A third package consists of eight fast-response, 15-psid transducers referenced to a vacuum and mounted on the CTS vertical strut. The accuracy of these transducers is within ±0.012 psi or ±0.25 percent of the measured pressure, whichever is greater. Approximately 50 in. of pressure tubing is required when using this package, thus reducing pressure stabilization times. This package is commonly used for base pressure measurements on static force and moment tests and flow-field probing tests using only one or two probes. Accessibility to the package is the same as noted for paragraph 2 above.

Another capability which exists for trajectory tests applies to interference-free trajectory simulation. This capability is the deletion of the physical translation of the CTS store model, thus avoiding the problem of exceeding drive limits. To do this, the full-scale store translation positions from the solution of the equations of motion are computed and recorded, but are set to zero when scaling them to CTS coordinates. Therefore, translational motion of the CTS is deleted, but angular motion is handled normally. This capability also allows free-stream data on the CTS model to be obtained in favorable locations in the test sections (regions of best flow uniformity).

Experience with CTS testing at AEDC has yielded the following test data productivity values:

GRID Mode

1. Flow-Field Survey Measurements - Nominally 150 points/hr
2. Pressure Distribution Measurements - Nominally 200 points/hr
3. Static-Force and Moment Measurements - Nominally 375 points/hr

TRAJECTORY Mode

4. Trajectories - Nominally four 0.5-sec trajectories/hr

6.2 Captive Trajectory System Limitations

CTS units are inherently subject to certain limitations and compromises in relation to the simulation of actual trajectories. Two of these limitations and their influence on trajectory simulation are described in this section.

A simulation compromise, common to *all* CTS store separation trajectories, involves the different flight path angles of the store and the parent aircraft. A CTS test anomaly exists since both flight–path angles cannot be simultaneously simulated. Fortunately, this anomalous situation is of minor importance in most applications but its existence is noteworthy (Ref. 7). A simple example of this particular CTS testing compromise is noted below.

Consider a parent aircraft with its attached store where both are flying straight and level as illustrated in Fig. 17a. The velocity vectors of both configurations with respect to the horizontal are $\gamma_c = \gamma_s = 0$. After store separation, this situation is changed as illustrated in Fig. 17b. The parent aircraft is still flying straight and level ($\gamma_c = 0$) with the same velocity magnitude (U_A). The orientation (γ_s) and magnitude (U_R) of the store velocity vector has changed because of gravity, aerodynamic forces, thrust, and ejector forces. The wind tunnel cannot simulate both flow directions ($\gamma_c = 0$ and $\gamma_s \neq 0$) simultaneously. Consequently, the CTS TRAJECTORY program contains the following options:

1. Do not align the store velocity vector (U_R) with the tunnel velocity vector V. Then the total angle of attack of the store is $\theta = \alpha_s + \gamma_s$. Even though the store angle of attack is correct, its aerodynamic loads may still be somewhat in error. This depends on the magnitude of aerodynamic interference error caused by the incorrect angular orientation of the store with respect to the parent model.

2. Align the store total velocity vector (U_R) so that it is parallel to the tunnel velocity vector (V). Then the angle of attack of the store is α_s, which it should be. However, the store has been rotated through γ_s so that the angle between the store and the parent is also α_s, instead of $\theta = \alpha_s + \gamma_s$. Even though the store angle of attack is correct, its aerodynamic loads may still be somewhat in error. This depends on the magnitude of aerodynamic interference error caused by the incorrect angular orientation of the store with respect to the parent model.

The above options also apply to the yaw plane when $\sigma_s \neq 0$. In the above example, if the store flight-path angle (γ_s) is large (e.g., a few degrees), or large relative to α_s or θ, then CTS trajectory results from either option (1 or 2) may be spurious. The store flight-path angle (γ_s) is generally small (less than one degree) in the interference region where a CTS trajectory is practical. Consequently, the inevitable test compromise exerts only a minor influence on the results.

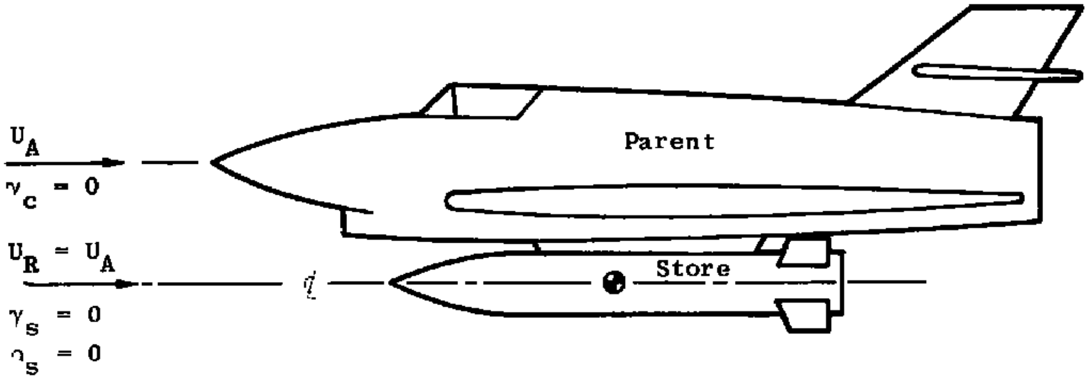

a. Initial position, t = 0

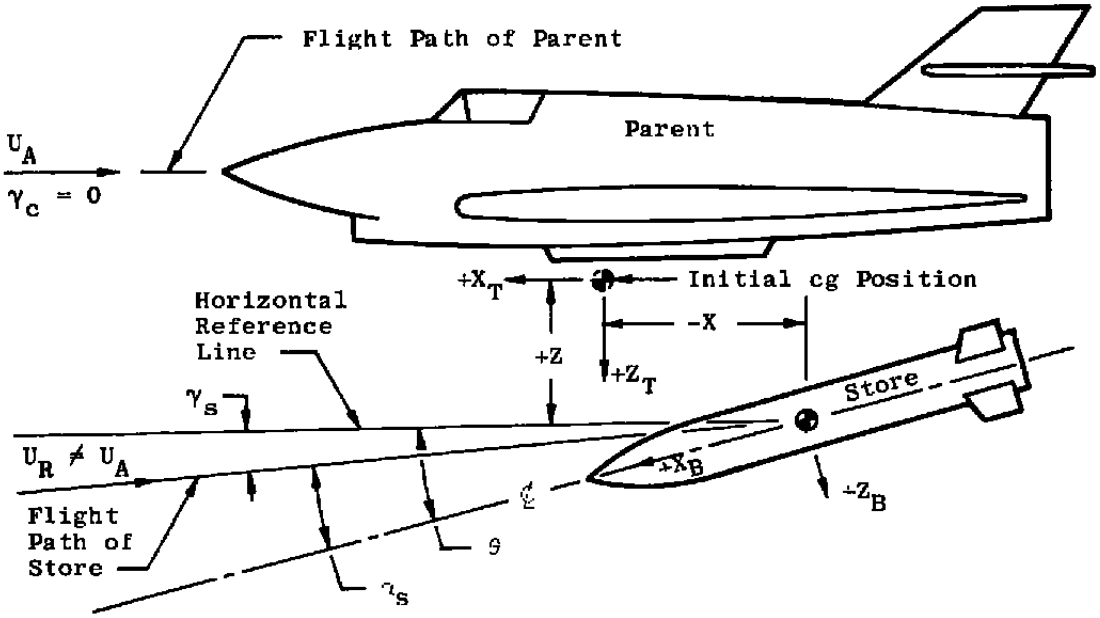

b. Postion at t ≠ 0

Figure 17. Store-parent schematic, fuselage centerline launch point.

The CTS rates of positioning the model are generally *not* equal to the full-scale trajectory translational and angular velocities because of physical system limitations (Table 1). These rates are different by orders of magnitude. This is a basic limitation for *any* CTS unit. Thus, *CTS trajectory time (or full-scale trajectory time) and tunnel test time* (during a CTS trajectory run) are not equal. It requires several minutes of tunnel time to run a CTS trajectory lasting only a second (see Section 6.10). Elimination of the present CTS trajectory point corroboration scheme (a stop-and-go procedure described in Section 4.2) would lower the tunnel test time but would *not* materially help the rate simulation. A CTS trajectory is a somewhat restrained or quasi-steady trajectory compared to an actual free flight; so, any transient, unsteady, or rate-dependent aerodynamic loads are not measured during a CTS trajectory. However, provision is made in the present program to simulate numerically conventional aerodynamic damping (C_{ℓ_p}, C_{m_q}, and C_{n_r}). These damping coefficients are normally User supplied. Other transient, unsteady, or rate-dependent aerodynamic loads may be numerically simulated if their mathematical model is known from theory or experiment. This information must also be supplied by the User. Special programming will be required to input these effects.

It must also be emphasized that the trajectories or flight path of most practical store configurations are controlled by the *steady* or *static* aerodynamic loads. It is, of course, realized that unsteady aerodynamic loads may be a dominant feature of certain configurations. However, the magnitude and rather large variation with relative position of steady aerodynamic interference loads will normally overpower the influence of conventional aerodynamic damping (angular rate-dependent) loads. Aerodynamic damping requires enough time for several angular oscillation cycles to occur before its influence on angular magnitude is evident. By this time, the store will normally be clear of the parent aircraft interference flow field, and further CTS simulation is unnecessary.

The above remarks concerning the minimum influence of the limitations are substantiated by the good agreement between *actual full-scale flight test* store separation trajectories and CTS trajectories from the Aerodynamic Wind Tunnel (4T). Consequently, regardless of the limitations discussed above, it is concluded that the aerodynamic flow field and store vehicle trajectories within the flow field can be properly simulated by CTS tests for most configurations of practical importance.

6.3 REQUIRED INPUTS FOR CAPTIVE TRAJECTORY SYSTEM TESTS

Certain basic information is required from Users planning to employ the CTS test capabilities. This required information is categorized and listed in this section to aid the Users in test planning.

6.3.1 GRID Mode

Parent and Store Model-Scaled Properties

1. Coefficient Reference Area, A_m, in.^{2}
2. Coefficient Reference Lengths, ℓ_{1_m}, ℓ_{2_m}, ℓ_{3_m}, in.
3. Length to be Used in Length Reynolds Number, ℓ_{4_m}, in.
4. Model Base Area, A_b, in.^{2}
5. Model Length for Computing Center-of-Pressure location, ℓ_m, in.
6. Distance from Model Nose to Moment Reference Point (MRP) (This point coincides with the full-scale center of gravity, in.)

Grid Matrix Information

1. Location of Reference Point on Store Model for Positioning within the Grid
2. Definition of Positive Directions in Grid Axes
3. Definition of Grid Axis Reference Point
4. Definition of All Grid Points at Which Data will be Obtained

6.3.2 TRAJECTORY Mode

Parent and Store Model-Scaled Properties

1. Coefficient Reference Area, A_m, in.^{2}
2. Coefficient Reference Lengths, ℓ_{1_m}, ℓ_{2_m}, ℓ_{3_m}, in.
3. Length to be Used in Length Reynolds Number, ℓ_{4_m}, in.
4. Model Base Area, A_b, in.^{2}
5. Model Length for Computing Center-of-Pressure Location, ℓ_m, in.
6. Distance from Model Nose to MRP (This point coincides with the full-scale center of gravity, in.)

Launch Position Information

Definition of the Position of the Store Model with Respect to the Parent Model When at the Launch Position (Position Where t, X, Y, Z, and All Store Velocities are Equal to Zero)

Parent Vehicle Full-Scale Properties

1. Parent-Vehicle Simulated Accelerations Along the Tunnel Axes, a_x, a_y, a_z, ft/sec^2
2. Parent-Vehicle Climb Angle, γ_c, deg
3. Parent-Vehicle Roll Angle, ϕ_{AC} deg
4. Parent-Vehicle Mach Number (Tunnel Free-Stream Mach Number), M
5. Initial Altitude of Parent Vehicle, ft

Store Vehicle Full-Scale Properties

1. Store Vehicle Mass, $\overline{m}$, slugs
2. Store Vehicle Coefficient Reference Area, A, ft^2
3. Store Vehicle Coefficient Reference Lengths, ℓ_1, ℓ_2, ℓ_3, ft
4. Store Vehicle Mass Moments of Inertia, I_{xx}, I_{yy}, I_{zz}, slug-ft^2
5. Store Vehicle Products of Inertia, I_{xz}, I_{yz}, I_{xy}, slug-ft^2
6. Store Vehicle Damping Derivatives in Roll, Pitch, and Yaw, Respectively, C_{ℓ_p}, C_{m_q}, C_{n_r}, rad^{-1}
7. Store Vehicle Arbitrary Incremental Coefficients, C_{N_0}, C_{m_0}, C_{Y_0}, C_{n_0}, C_{ℓ_0}, C_{A_0}

Postlaunch Information

1. Time at Start of Postlaunch Trajectory, t_o, sec
2. Store Vehicle Angular Velocities at Postlaunch, p_o, q_o, r_o, rad/sec
3. Store Vehicle Linear Velocities at Postlaunch, u_o, v_o, w_o, ft/sec
4. Store Vehicle Coordinates from Launch Position at Postlaunch, X_{I_o}, Y_{I_o}, Z_{I_o}, ft
5. Store Vehicle Attitude at Postlaunch, ν_{I_o}, η_{I_o}, ω_{I_o}, deg

Ejector Force Simulation Constants

1. Ejector Force Vector Angle (See Fig. 18) ω_m, deg
2. Forward and Aft Ejector Locations (See Fig. 18), respectively, X_1, X_2, ft
3. Definition of Ejector Force as a Function of Either Time of Stroke or Length of Stroke (See Fig. 19a)

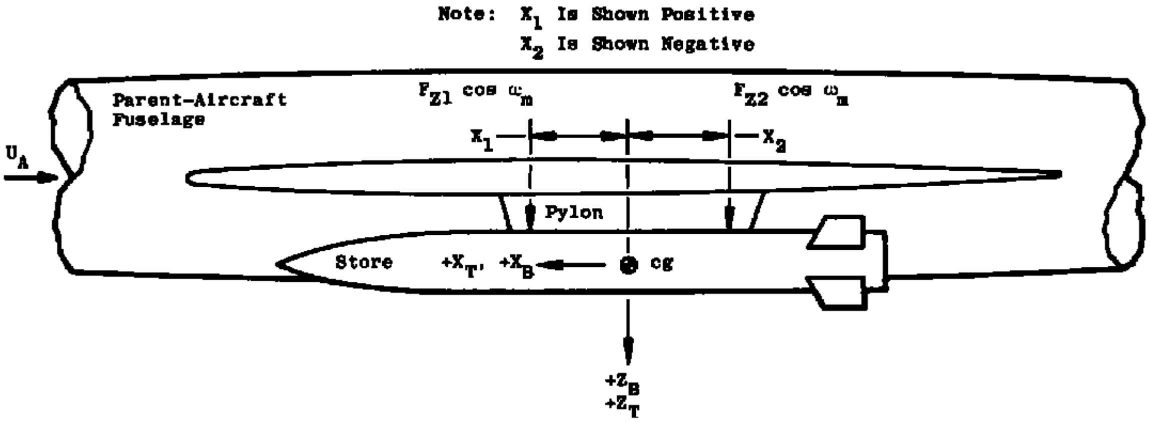

a. Sideview (along +Y, initial position t = 0)

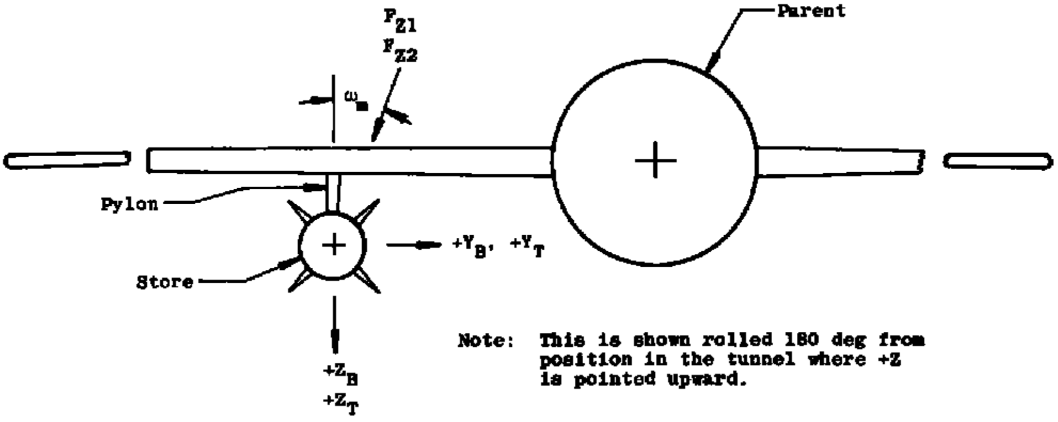

b. Rear view (along +X, initial position, t = 0)

Figure 18. Store-parent schematic, wing-mounted pylon launch point.

Thrust Simulation Constants

1. Store Vehicle Jet Damping Derivatives (see Ref. 8, pp. 221-223 and Ref. 9, Appendix 1), K_{f_p}, K_{m_q}, K_{n_r}, ft-lb-sec/rad
2. Definition of the Thrust Force Utilizing the Following Sequence of Events: Store Reaches End of Lanyard after Falling a Distance Z_L or Time t_L and Initiates Ignition; at Z_L or t_L Thrust Buildup Begins TD sec Later Where $t_t = 0$; Definition of the Thrust Force as a Function of t_t Until the Thrust is Terminated at T3 sec (See Fig. 19b)

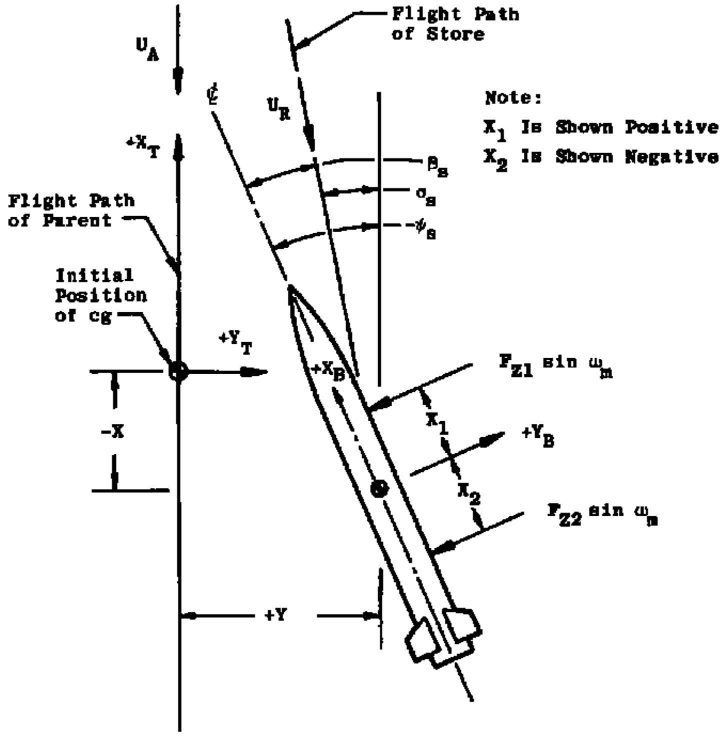

c. Top view (along + Z, position of store at t ≠ 0)
Figure 18. Concluded.

The above information is necessary to start a CTS trajectory. Additional simulation features such as thrust vector control or aerodynamic control can be simulated if the appropriate formulation is User supplied. This information must be incorporated in a special subroutine. Enough lead time must be provided for the programming and checkout of these special subroutines.

This capabilities summary has been designed to give the significant information required to plan a CTS test for Tunnels A, B, and C. Because of the complex nature and multitude of steps in the test process, many items could be discussed only briefly and some test-peculiar items are not mentioned. AEDC will be pleased to answer any questions, and if the CTS is required for a test, the necessary details and further assistance for test planning coordination, and accomplishment will be provided upon request.

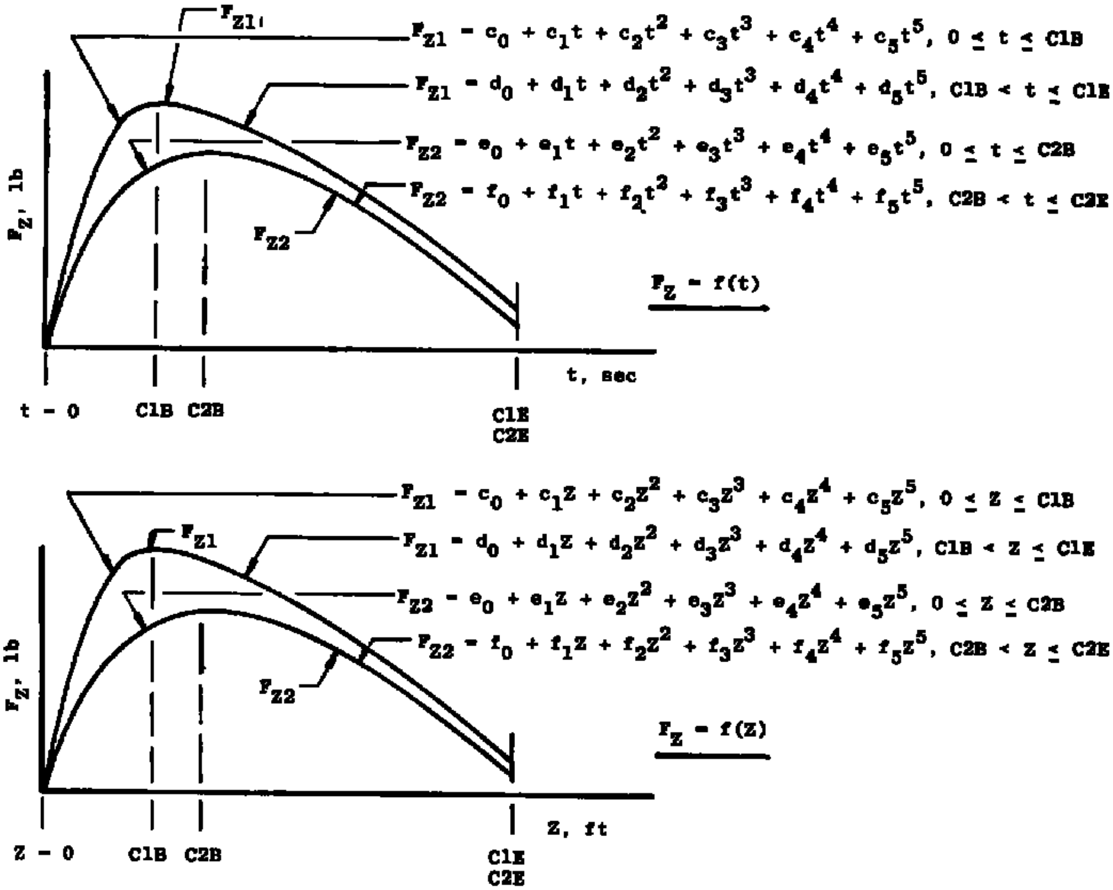

a. Ejector force

Figure 19. Ejector force and thrust simulation constant definitions.

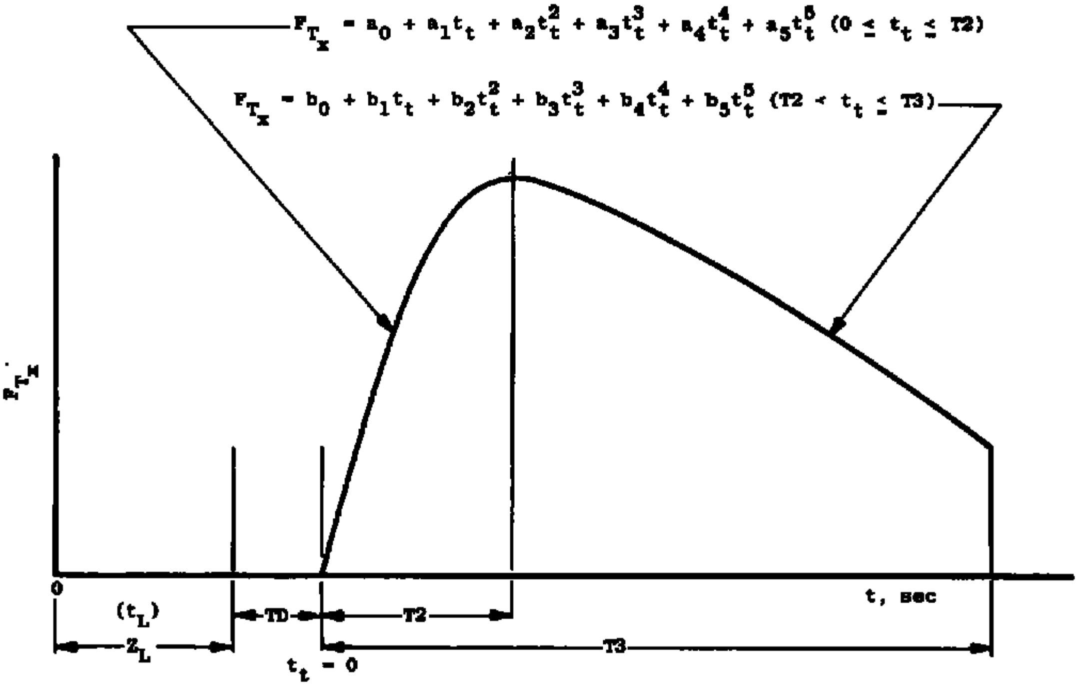

b. Thrust
Figure 19. Concluded.

7.0 CONCLUDING REMARKS

It is clear that the Captive Trajectory System provides great flexibility and is invaluable for a variety of test techniques.

However, one should note that the applications are not limited to those described herein, as there can be numerous variations. Other available approaches include "reverse-staging" techniques where the previously described "parent" model is mounted on the CTS mechanism and moved relative to a primary support mounted "store" model. This is extremely useful for parametric store evaluations in proximity to carriage position.

Manual and remotely actuated lower-model support mechanisms providing additional motion degrees-of-freedom are also available. These supports can accommodate one or two independent models with instrumentation.

Special User requirements will also be considered as the need arises to provide alternate support systems and/or variations from standard test techniques.

Contact with AEDC personnel is critical early in test program development to ensure that the objectives will be achieved in a timely, professional, and cost-efficient manner.

REFERENCES

1. Jones, J. H. "AEDC Captive Trajectory System." Paper presented at the Forty-First Semiannual Supersonic Tunnel Association Meeting in Los Angeles, California, March 1974.

2. Billingsley, J. P., Burt, R. H., and Best, J. T. "Techniques Used in Store Separation Testing at AEDC,"—Vol.III "Description and Validation of Captive Trajectory Store Separation Testing in the von Kármán Gas Dynamics Facility." AEDC-TR-79-1 (AD-A068319), March 1979.

3. Hill, D. W., Best, J. T., and Tolbert, R. H. "Comparision of Trajectory, Aerodynamic Loads, and Flow-Field Data Obtained in the AEDC PWT/4T and VKF/A Wind Tunnels at Mach Number 1.63." AEDC-TR-78-45 (AD-A065137), November 1978.

4. *Test Facilities Handbook* (Eleventh Edition). "von Kármán Gas Dynamics Facility, Vol. 3." Arnold Engineering Development Center, April 1981.

5. Bamber, M. J. "Two Methods of Obtaining Aircraft Store Trajectories from Wind Tunnel Investigations." AERO Report 970 (AD-233198), David Taylor Model Basin, Washington, D. C., January 1960.

6. Christopher, J. P. and Carleton, W. E. "Captive Trajectory Store Separation System of the AEDC-PWT 4-ft Transonic Tunnel." AEDC-TR-68-200 (AD-83974B), September 1968.

7. Goodwin, F. K., Nielsen, J. N., and Dillenius, M. F. E. "A Method for Predicting Three-Degree-of-Freedom Store Separation Trajectories at Speeds up to the Critical Speed." AFFDL-TR-71-81, November 1974.

8. Thomson, W. T. *Introduction to Space Dynamics*. John Wiley and Sons, New York, 1961.

9. Brown, R. C., Brulle, R. B., Combs, A. E., and Griffin, G. D. "Six-Degree-of-Freedom Flight-Path Study Generalized Computer Program," Part I, Problem Formulation, FDL-TDR-64-1, Part I, Volume 1, October 1961.

NOMENCLATURE

A	Full-scale store vehicle reference area used for converting aerodynamic coefficients as measured by the balance to full-scale forces and moments, ft^2
A_b	Model base area, $in.^2$
A_m	Parent and store model reference area for aerodynamic coefficients as measured by the balance, $in.^2$
a_x,a_y,a_z	Parent vehicle simulated accelerations along the tunnel axes, ft/sec^2
a_0-a_5,b_0-b_5	Coefficients of polynominal curve fit of simulated full-scale store vehicle thrust, lbf, lbf/sec,..., lbf/sec^5
C1B,C2B	Polynominal break points for full-scale store vehicle simulation for forward and aft ejectors, respectively, sec or ft
C1E,C2E	Forward and aft ejector force cutoff times, respectively, for full-scale store vehicle ejector force simulation, sec or ft
$C_{\ell_p},C_{m_q},C_{n_r}$	Damping coefficients in roll, pitch, and yaw, respectively, rad^{-1}
C_{N_0},C_{m_0},C_{Y_0} $C_{n_0},C_{\ell_0},C_{A_0}$	Arbitrary constant aerodynamic coefficients that can be input into the trajectory program
C_{N_T},C_{m_T},C_{Y_T}, $C_{n_T},C_{\ell_T},C_{A_T}$	Tolerance band on predicted aerodynamic coefficients
c_0-c_5, d_0-d_5	Coefficients of polynominal curve fit of simulated full-scale store vehicle forward ejector force, lbf, lbf/sec,..., lbf/sec^5 or lbf, lbf/ft,..., lbf/ft^5
cg	Center of gravity
e_0-e_5, f_0-f_5	Coefficients of polynomial curve fit of simulated full-scale store vehicle aft ejector force, lbf, lbf/sec,..., lbf/sec^5 or lbf, lbf/ft,..., lbf/ft^5
F_{T_x}	Simulated full-scale store vehicle thrust force, lbf

F_{Z1},F_{Z2}	Forward and aft simulated full-scale store vehicle ejector forces, lbf
I_{xx},I_{yy},I_{zz}	Full-scale store vehicle mass moments of inertia about body-fixed axes, slug-ft^2
I_{xy},I_{uz},I_{xz}	Full-scale store vehicle cross product mass moments of inertia in the body-fixed axes, slug-ft^2
$K_{\ell_p},K_{m_q},K_{n_r}$	Full-scale store vehicle jet damping constants for moments about the body-fixed axes, roll, pitch, and yaw, respectively, ft-lbf-sec/rad
ℓ_1,ℓ_2,ℓ_3	Full-scale store vehicle reference lengths used for converting aerodynamic coefficients as measured by the balance to full-scale forces and moments, ft
$\ell_{1_m},\ell_{2_m},\ell_{3_m}$	Parent and store model reference lengths for aerodynamic coefficients as measured by the balance, in.
ℓ_{4_m}	Reference length used in length Reynolds number, in.
ℓ_m	Model length, in.
MRP	Model moment reference point, must coincide with full-scale vehicle cg, in.
M	Tunnel free-stream Mach number, also parent vehicle simulated Mach number
$\bar{m}$	Full-scale store vehicle mass, slug
p_o,q_o,r_o	Full-scale store vehicle angular velocities at the postlaunch position about the body-fixed axes, X_B,Y_B, and Z_B, respectively, rad/sec
$r_1 - r_{10}$	CTS sting geometry radius arm constants, in.
T2	Polynomial break point for full-scale store vehicle thrust simulation, sec
T3	Cutoff time for full-scale store vehicle thrust simulation, sec
TD	Ignition delay time for full-scale store vehicle thrust simulation, sec

t	Actual simulated flight time, sec
t_L	Full-scale store vehicle free-fall time before the thrust simulation begins, sec
t_o	Postlaunch trajectory time offset, sec
t_t	Full-scale store vehicle thrust simulation burn time, sec
U_A	Velocity of the parent vehicle at the altitude being simulated, ft/sec
U_R	Full-scale store vehicle total velocity, ft/sec
u_o,v_o,w_o	Full-scale store vehicle translation velocities at the postlaunch position along the body-fixed axes, X_B,Y_B, and Z_B, respectively, ft/sec
V	Tunnel free-stream velocity, ft/sec
X,Y,Z	Parent vehicle flight axis system which is fixed to and moves with the parent vehicle, ft
X_B,Y_B,Z_B	Body-fixed flight axis system which is fixed to and moves with the store vehicle, ft
X_c,Z_c,η_c ψ_c,α_c,ϕ_c	CTS six-degree-of-freedom variable drives, axial, vertical, aft yaw, forward yaw, pitch, and roll, respectively, in. and deg
X_1,X_2	Distance from cg to line of action of forward and aft ejector forces, respectively, from full-scale store vehicle ejector force simulation, measured along X_B axis and positive if force acts forward of cg, ft
X_{I_o},Y_{I_o},Z_{I_o}	Full-scale store vehicle position at postlaunch measured from the launch point, ft
X_T,Y_T,Z_T	Tunnel-fixed axes, in.
x,y,z	Earth-fixed inertial axes used in the six-DOF trajectory program, ft

Z_L	Full-scale store vehicle falls this distance before the thrust simulation begins, ft
α	Parent model angle of attack, deg
$\alpha_{in.}, \psi_{in.}, \beta_{in.}, \phi_{in.}$	Difference between CTS model and parent model pitch, yaw, sideslip, and roll angles respectively, deg
$\alpha_{pc}, \theta_c, \phi_{cA}$	CTS-fixed angles, deg
α_s	Full-scale store vehicle angle of attack, deg
β_s	Full-scale vehicle sideslip angle, deg
γ_c	Parent vehicle simulated climb angle, positive for climb, negative for dive, deg
γ_s	Flight-path angle with respect to the X_T-Y_T plane for the full-scale store vehicle, deg
$\nu_{I_0}, \eta_{I_0}, \omega_{I_0}$	Full-scale store vehicle attitude at the postlaunch position, deg
σ_s	Flight-path angle with respect to the X_T-Z_T plane for the full-scale store vehicle, deg
ϕ_{AC}	Parent vehicle simulated bank angle, positive is clockwise looking upstream, deg
ψ, θ, ϕ	Full-scale store vehicle attitude in Euler angles referenced to the tunnel axes, X_T, Y_T, Z_T, deg
ψ_x	Full-scale store vehicle yaw angle, $-(\beta_x + \sigma_s)$, deg
ω_m	Angle of the simulated ejector force in the store Y_B-Z_B plane for the full-scale store vehicle, positive is clockwise looking upstream, deg