AD-E850 218

USAFETAC/TN-82/005

3

AD A123280

THE THEORY AND USE OF A RAYTRACING MODEL DEVELOPED AT USAFETAC

BY

CAPT MICHAEL D. ABEL

MAJ JOHN D. MILL

CAPT C. TED LINN

SEPTEMBER 1982

Approved For Public Release; Distribution Unlimited

DTIC FILE COPY

DTIC ELECTE JAN 10 1983 S D B

UNITED STATES AIR FORCE
AIR WEATHER SERVICE (MAC)

USAF
ENVIRONMENTAL
TECHNICAL APPLICATIONS
CENTER

SCOTT AIR FORCE BASE, ILLINOIS 62225

82 12 28 040

REVIEW AND APPROVAL STATEMENT

USAFETAC/TN-82/005, The Theory and Use of a Raytracing Model Developed at USAFETAC, September 1982, is approved for public release. There is no objection to unlimited distribution of this document to the public at large, or by the Defense Technical Information Center (DTIC) to the National Technical Information Service (NTIS).

This technical publication has been reviewed and is approved for publication.

FOR THE COMMANDER

DR. PATRICK J. BREITLING
Chief Scientist

UNCLASSIFIED

SECURITY CLASSIFICATION OF THIS PAGE (When Data Entered)

REPORT DOCUMENTATION PAGE		READ INSTRUCTIONS BEFORE COMPLETING FORM
1. REPORT NUMBER USAFETAC/TN-82/005	2. GOVT ACCESSION NO. AD-A123 280	3. RECIPIENT'S CATALOG NUMBER
4. TITLE (and Subtitle) THE THEORY AND USE OF A RAYTRACING MODEL DEVELOPED AT USAFETAC		5. TYPE OF REPORT & PERIOD COVERED Technical Note 6. PERFORMING ORG. REPORT NUMBER
7. AUTHOR(s) Michael D. Abel, Capt., USAF John D. Mill, Maj., USAF C. Ted Linn, Capt., USAF		8. CONTRACT OR GRANT NUMBER(s)
9. PERFORMING ORGANIZATION NAME AND ADDRESS USAF Environmental Technical Applications Center/DNE Scott AFB, Illinois 62254		10. PROGRAM ELEMENT, PROJECT, TASK AREA & WORK UNIT NUMBERS USAFETAC Project 1815
11. CONTROLLING OFFICE NAME AND ADDRESS USAF Environmental Technical Applications Center Scott AFB, Illinois 62254		12. REPORT DATE September 1982 13. NUMBER OF PAGES 102
14. MONITORING AGENCY NAME & ADDRESS(if different from Controlling Office)		15. SECURITY CLASS. (of this report) Unclassified 15a. DECLASSIFICATION/DOWNGRADING SCHEDULE

16. DISTRIBUTION STATEMENT (of this Report)

Approved for public release; distribution unlimited.

17. DISTRIBUTION STATEMENT (of the abstract entered in Block 20, if different from Report)

18. SUPPLEMENTARY NOTES

19. KEY WORDS (Continue on reverse side if necessary and identify by block number)

Raytracing; Refraction; Radar; Electromagnetic energy; Atmospheric refraction.

20. ABSTRACT (Continue on reverse side if necessary and identify by block number)

This report describes the theory and use of the USAFETAC raytrace model RAYTRA. In this model atmospheric refraction is calculated using geometric optics and a single atmospheric profile. This program allows the user to define an arbitrary path geometry in the atmosphere anywhere from the Earth's surface to space. In its present form ionospheric effects are ignored. Its use is restricted to frequencies between 30 KHz (wavelength 10 km) and 1500 Hz (wavelength 0.2 m). For frequencies between 115 GHz (wavelength 0.25 cm) and 15 THz (wavelength

DD FORM 1 JAN 73 1473 EDITION OF 1 NOV 65 IS OBSOLETE

UNCLASSIFIED

SECURITY CLASSIFICATION OF THIS PAGE (When Data Entered)

20. ABSTRACT (Cont'd): 20 m), the model results should be accepted with caution The model itself is unique in its flexibility of application and special numerical techniques which enable it to compute types of ray paths which some models cannot handle. Furthermore, the code is structured in a modular, 'top down' fashion to allow for ease in modification and program maintenance. It has the capability to utilize user input atmospheric data or data from the USAFETAC archived weather tapes. Actual ray plotting is not provided. Instead, added information on the net atmospheric refractive effect such as range error is included in the output along with a summary of the input parameters.

PREFACE

Precision radar and optical systems require very accurate tropospheric refraction corrections to account for time delay and/or ray path bending as a function of the atmospheric state. This technical note describes a state-of-the-art raytrace model developed and operated at the US Air Force Environmental Technical Applications Center (USAFETAC) that uses a single vertical meteorological profile and the general theory of geometric optics to compute atmospheric refractive effects. The most common application of this model is point-to-point ray traces. An important feature of this model is its ability to have the source at a higher altitude than the target. In other words, zenith ray angles exceeding 90° are possible. The output format of this model features a table with values of errors due to refraction. Actual ray plotting is not provided.

Most readers of this technical report will not want or need to read the entire report. The objective will probably be to seek out specific answers to RAYTRA questions. The Chapter titles will help the reader find what he is after. In general, the person who wants to use RAYTRA, or thinks he does, should read Chapters 2, 7, and 8, and Section 4.3. If more detail or background is required, refer to the remaining chapters.

The main raytracing model, called RAYTRA, was designed primarily by Maj John Mill. The programming of the raytracing package (three separate programs, one of which is RAYTRA) was accomplished primarily by Lt Jack D. Brown, Jr., with technical help from Maj Mill and Capt Ted Linn. Capt Michael Abel oversaw the package completion. This technical note is also a combined effort. Capt Abel was also responsible for coordinating the effort. Maj Mill was the principal author of Chapter 5, and also helped with Chapters 1, 2, 3, 4, and 6. Capt Linn wrote most of Chapters 1, 2, 3, 6, 8, and 9. Lt Brown wrote Chapter 7.

DTIC COPY INSPECTED 2

Accession For
NTIS GRA&I ☑
DTIC TAB ☐
Unannounced ☐
Justification PER CALL JC
By
Distribution/
Availability Codes
Dist | Avail and/or Special
A

CONTENTS

		Page
Chapter 1	INTRODUCTION	1
Chapter 2	GENERAL DESCRIPTION OF RAYTRA	2
2.1	Program Descriptions	2
2.2	Assumptions and Limitations	2
2.3	Input Atmospheric Data Categories	4
2.4	Input Geometry Categories	4
2.5	Ouput Options	5
2.6	Input/Output Variable Definitions	6
Chapter 3	REFRACTION THEORY	11
3.1	Index of Refraction	11
3.2	Snell's Law	11
Chapter 4	BASIC GEOMETRY CONSIDERATIONS	14
4.1	Basic Tracing Equations	14
4.2	Earth Radius and Radius of Curvature	18
4.3	Input Geometry Variables and Path Types	19
Chapter 5	SPECIAL NUMERICAL TECHNIQUES	23
5.1	Cases where ANGLE is Known	23
5.2	Cases where ANGLE is Unknown	26
5.2.1	Iteration to BETA	27
5.2.2	Iteration to RANGE	30
5.3	Path Types 3 and 4	31
Chapter 6	ATMOSPHERIC DATA PROCESSING	33
6.1	Atmospheric Data Sources	33
6.2	Allowance for Missing Data	33
6.3	Data Adjustment	34
6.4	Pressure/Height and Humidity Formulas	35
Chapter 7	RAYTRACE PACKAGE USER'S MANUAL	37
7.1	General Overview	37
7.1.1	Purpose of User's Manual	37
7.1.2	General Information on Programs	37
7.2	Interactive BDLCOM - General	38
7.2.1	Interactive BLDCOM - Structure	38
7.2.2	Interactive BLDCOM - Performance	38
7.2.3	Interactive BLDCOM - Data Base Requirements	38
7.2.4	Interactive BLDCOM - Description of Input	38
7.2.5	Interactive BLDCOM - Description of Processing	40
7.2.6	Interactive BLDCOM - Description of Output	40
7.2.7	Interactive BLDCOM - Program Execution	41
7.3	Interactive BLDATM - General	43
7.3.1	Interactive BLDATM - Structure	43
7.3.2	Interactive BLDATM - Performance	46
7.3.3	Interactive BLDATM - Data Base Requirements	46
7.3.4	Interactive BLDATM - Description of Input	48
7.3.5	Interactive BLDATM - Description of Processing	49
7.3.6	Interactive BLDATM - Description of Output	49
7.3.7	Interactive BLDATM - Program Execution	52
7.4	Batch BLDCOM - General	58
7.4.1	Batch BLDCOM - Structure	58
7.4.2	Batch BLDCOM - Performance	58
7.4.3	Batch BLDCOM - Data Base Requirements	58
7.4.4	Batch BLDCOM - Description of Input	61
7.4.5	Batch BLDCOM - Description of Processing	62
7.4.6	Batch BLDCOM - Description of Ouput	62
7.4.7	Batch BLDCOM - Program Execution	62
7.5	Batch BLDATM - General	62
7.5.1	Batch BLDATM - Structure	63
7.5.2	Batch BLDATM - Performance	63
7.5.3	Batch BLDATM - Data Base Requirements	63

7.5.4	Batch BLDATM - Description of Input	63
7.5.5	Batch BLDATM - Description of Processing	68
7.5.6	Batch BLDATM - Description of Ouput	68
7.5.7	Batch BLDATM - Program Execution	69
7.6	RAYTRA - General	69
7.6.1	RAYTRA - Structure	69
7.6.2	RAYTRA - Performance	69
7.6.3	RAYTRA - Data Base Requirements	69
7.6.4	RAYTRA - Description of Input	69
7.6.5	RAYTRA - Description of Processing	69
7.6.6	RAYTRA - Description of Output	69
7.6.7	RAYTRA - Program Execution	70
7.7	Example JCL	80
Chapter 8	APPLICATION EXAMPLES	82
8.1	Typical Radar Problem	82
8.2	Typical Satellite Problem	82
8.3	Atypical Space Problem	89
Chapter 9	LOWTRAN/FASCODE MODELS	93
REFERENCES AND BIBLIOGRAPHY		94

LIST OF ILLUSTRATIONS

Figure 1.	Basic Flowchart of Program Sequence	3
Figure 2.	(a) Upward and Downward Paths from One Point at H1 to Another Point at H2. (b) Upward and Downward Paths from a Point at H1 to a Distant Celestial Object. Part (c) Shows the Short Path Solution for the Downward Path in (a) when HMIN § H2 § H1, Where HMIN is the Point at Which Ray is Closest to Earth. H3 is Specified When Limb Viewing is Desired (d) amd H2 is Set Equal to the Known Tangent Point	5
Figure 3.	Upward Path Geometry from a Starting Point at Altitude H1 To an Ending Point at Altitude H2	7
Figure 4.	Downward Short Path Geometry from a Starting Point at Altitude H1 To an Ending Point at Altitude H2	8
Figure 5.	Geometry for Path to Distant Celestial Object	9
Figure 6.	Depiction of Snell's Law Geometry for Spherical Surfaces	12
Figure 7.	Depiction of Basic Geometry for a Refracted Path Between Two Points Through One Spherical Layer	15
Figure 8.	Depiction of the GEOMETRIC RANGE, GR, and Its Relationship to the Elevation Angle Error, AE	17
Figure 9.	Depiction of the Earth as an Oblate Spheriod	18
Figure 10.	The Relationship Among the Input, Output, and Internal Values of the Variables BETA: The "Earth-centered" Substense of the Path	20
Figure 11.	(a) The Right Triangle Approximation, Used Iteratively to Find the Value of H2 Which Gives the Required Input RANGE. (b) Second Iteration of the Right Triangle Approximation Shown for an Upward Path	25
Figure 12.	Geometry for Celestial Path Types 3 and 4	31
Figure 13.	Interactive BLDCOM Structure	38
Figure 14.	Example of BLDCOM Execution	42
Figure 15.	Example of Interactive BLDCOM Output	43
Figure 16.	Structure of Interactive BLDATM	44
Figure 17.	KLOW - Formatted Observations	47
Figure 18.	Model Atmosphere - Formatted Observations	48
Figure 19.	Example of Output from Interactive BLDATM	50
Figure 20.	Example Execution of Interactive BLDATM	53
Figure 21.	Example of BLDATM Hard Copy Output	59
Figure 22.	Structure of Batch BLDCOM	61
Figure 23.	Structure of Batch BLDATM	63
Figure 24.	Structure of RAYTRA	64
Figure 25.	Example Execution of Interactive RAYTRA	70
Figure 26.	Example of RAYTRA Output	72

Figure 27. Case 1 Example Output (1st page). 83
Figure 28. Case 1 Example Output (2nd page). 84
Figure 29. Case 1 Example Output (3rd page). 85
Figure 30. Case 2 Example Output (1st page). 86
Figure 31. Case 2 Example Output (2nd page). 87
Figure 32. Case 2 Example Output (3rd page). 88
Figure 33. Case 3 Example Output (1st page). 90
Figure 34. Case 3 Example Output (2nd page). 91
Figure 35. Case 3 Example Output (3rd page). 92

Chapter 1

INRODUCTION

The USAFETAC raytrace model RAYTRA is a computer program which calculates, using geometric optics, numerous elements related to atmospheric refraction effects on a single beam (ray) of electromagnetic energy while it travels in the Earth's atmosphere. It allows the user to completely define an arbitrary refracted path in the atmosphere anywhere from the Earth's surface to space. The model allows for several input/output options concerning atmospheric data, path geometries, and intermediate level trajectory information. Furthermore, output data may either be in user-readable printed form, machine-readable binary form, or both.

The model is unique concerning its (1) flexibility of application, and (2) special numerical techniques which enable it to compute types of ray paths which some models cannot handle. Furthermore, the code is structured in a modular, "top down" fashion to allow for ease in modification and program maintenance. It also has the capability to produce input information for execution of the Air Force Geophysics Laboratory (AFGL) LOWTRAN (low resolution transmittance) program. AFGL TR 80-0067 [6] describes the latest versions of LOWTRAN (Note: The AFGL program, designated at USAFETAC as LOWTRN is very dynamic in the sense that it is usually in a state of constant revision, with new versions being issued periodically).

This technical note does not elaborate on LOWTRAN or the various USAFETAC feeder programs. It focuses on the description of the program RAYTRA, which performs the raytraces and contains the refraction algorithms. Also described in some detail are programs BLDATM and BLDCOM which must be executed prior to RAYTRA to set up input data and geometric/electrical parameters, respectively. Chapter 7 is a detailed description of how to run these three programs on the USAFETAC computer resources.

Chapter 2

GENERAL DESCRIPTION OF RAYTRA

2.1 Program Descriptions

Brief descriptions of the feeder and primary programs follow. Figure 1 is a flowchart outlining their execution sequence.

ENAPRECON - processes USAFETAC DATSAV upper-air data to correct many data elements [1].

ENAEXTR - Extracts and reformats desired upper-air data from taped output of ENAPRECON [2].

ENS2AMOD - Produces USAFETAC Point Analysis upper-air data [3] [4].

PASELECT - Extracts and reformats desired Point Analysis upper-air data from output of ENS2AMOD [4].

RKLOW - Optional program which filters output of ENAEXTR to selected months, observation times (internal documentation only [5]).

BLDATM - Accepts input atmospheric data from PASELECT, ENAEXTR, RKLOW, disk files (model atmospheres), or terminal. Processes these data for input to RAYTRA or LOWTRN. Calculates and/or models moisture variables.

BLDCOM - Accepts terminal input of geometric and electrical specifications and formats commands for use in RAYTRA or LOWTRN.

RAYTRA - Performs actual raytracing from output of BLDATM and BLDCOM. Contains the "raytrace model."

LOWTRN (currently LOWTRAN 5 model) - Performs low spectral resolution transmittance and radiance calculations. Accepts input from BLDATM and BLDCOM [6]. FASCOD [7] may be substituted for LOWTRAN for certain applications.

Most files produced by these programs have certain required names. Detailed descriptions of the files and their formats are contained in Chapter 7.

2.2 Assumptions and Limitations

Many assumptions/limitations enter into the raytrace model. Several of the more important ones are

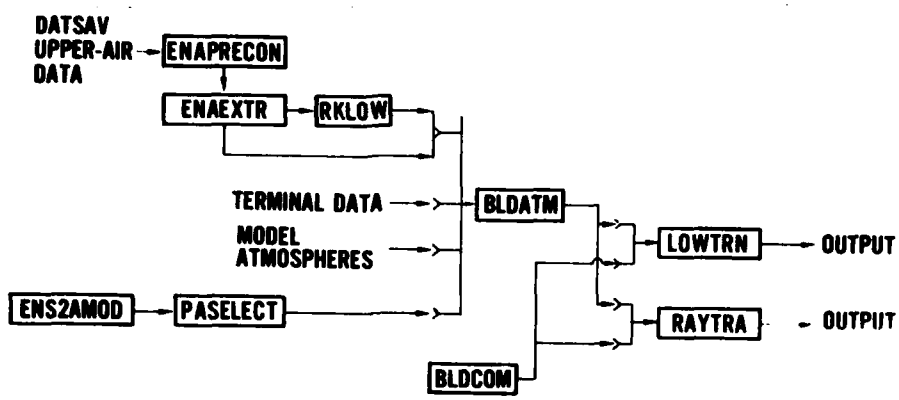

Figure 1. Basic Flowchart of Program Sequence.

a. The model is "one dimensional" in the sense that, for any single trace, only one vertical profile of atmospheric data is allowed for input (i.e., it assumes spherical or horizontal homogeneity of the atmosphere). This is the most limiting assumption, although in many cases more extensive atmospheric data is not available even if it were possible to use it as input.

b. The theory of geometric optics assumes that, (1) fractional changes in the refractive index (n) within one wavelength will be small compared with 1.0, and (2) fractional changes in the spacing between "hypothetical" adjacent rays within one wavelength will be small compared with 1.0 [8]. The first condition implies that the refractive index does not change appreciably in a wavelength. The second condition implies that ray patterns that diverge or converge rapidly or cross each other have questionable validity.

c. All refraction calculations are referenced to the speed of light in a vacuum, designated as c. When applying the model to compute elements such as range error of a radar, the range results will be miscalculated if the range display of the radar in question is designed to electronically compensate for the speed of light in an atmospheric medium such as a standard atmosphere.

d. The model is highly sensitive to small changes in refractivity in the lower portion of the atmosphere when computing actual <u>ranges</u> (especially with small elevation/large zenith input angles). However, the range and angle <u>errors</u> computed for a given refractivity case do not reflect this sensitivity.

e. The formulas for computing refractive moduli (N) restrict use of the model to frequencies between 30 KHz (wavelength 10 km) and 1500 THz (wavelength 0.2 micrometers). For frequencies between 115 GHz (wavelength 0.25 centimeter) and 15 THz (wavelength 20 micrometers), the model results should be accepted with caution. The refractive modulus formulas technically are not applicable in that range, though the error may be quite small. Work is in progress at AFGL to update these calculations.

f. The model assumes that a ray path exists between points of interest. Tracing terminates if an apogee point ("ray ducting") or tangent point (described below) is encountered, or the path intersects the Earth, or the ray enters space. Except in unusual cases, this signifies that no path actually exists between those points.

g. Ionospheric effects are not currently considered; however, provision is made for including an ionospheric module in future versions. No refractive effects are considered above 50 km.

2.3 Input Atmospheric Data Categories

Input atmospheric data are grouped into four main categories

a. Upper-air soundings (i.e., raob information from the USAFETAC Data Save (DATSAV) data).

b. Upper-air computations from the USAFETAC/AFGWC Point Analysis program [4].

c. Special model atmospheres [9].

d. User-specified upper-air data provided to the computer terminal at time of execution.

2.4 Input Geometry Categories

Input geometry specifications fall into two main categories

a. From one point to another.

b. From one point in the Earth's atmosphere to a distant celestial object (one so far from the Earth that rays emitted from it may be treated as parallel by the time they reach the Earth).

There are two subcategories of the point-to-point case: upward and downward going paths. When dealing with downward-directed paths from one point to another, there may also be two solutions: either a long path (two segments) or a short path (one segment). If the long path is desired, variable flag LEN is set equal to 1, for short paths LEN=0. Figure 2 depicts the various geometric categories. In general, two segment paths are possible for two different geometries. If H2 lies between H1 and the ray trajectory minimum height H MIN, which is also called the tangent point (see Figure 2c and 2d), level #2 will be crossed twice. Or H2 may be specified as the tangent point and the program will calculate the trajectory from H1 to H2, and then from H2 to H3, the specified ending height.

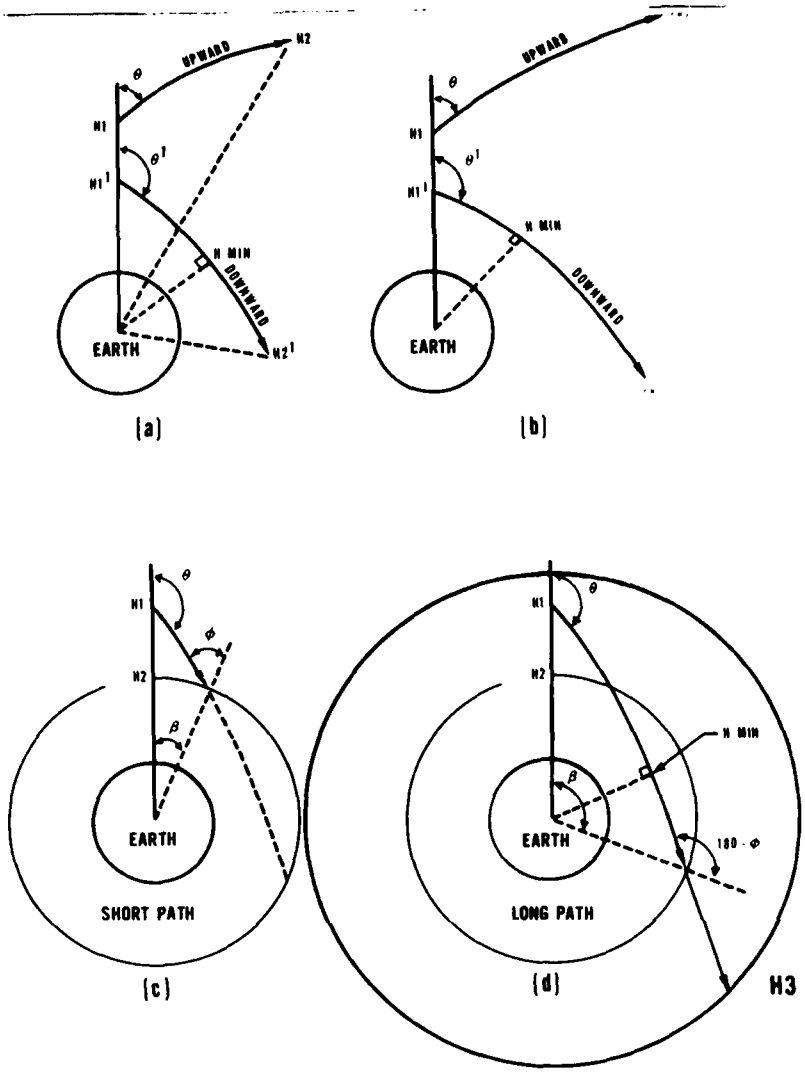

Figure 2. (a) Upward ($\theta<90°$) and Downward ($\theta_1 \geq 90°$) Paths from One Point at H1 (H1') to Another Point at H2 (H2'). (b) Upward and Downward Paths from a Point at H1 (H1') to a Distant Celestial Object (∞). Part (c) Shows the Short Path Solution for the Downward Path in (a) when HMIN § H2 § H1, Where HMIN is the Point at Which Ray is Closest to Earth (tangent point). H3 is Specified When Limb Viewing is Desired (d) and H2 is Set Equal to the Known Tangent Point. (Extracted with modifications from AFGL-TR-80-0067 [6]).

In addition, the point-to-point cases may be divided into those in which the initial ray zenith angle is either known or unknown. If unknown, special treatment is required and is discussed in Chapter 5. Also see Section 4.3 for a more detailed account of which input geometry variable combinations are acceptable.

2.5 Output Options

Format options include tape (binary file), printed, or both. Any combinations of the following three groups, with one output group per page, is possible

a. Input data, final path results, and informational or error messages.

b. Intermediate path results for each level at which computations are made as the "ray" is being traced (at heights of input atmosphere plus certain other critical heights).

c. Atmospheric data, and associated refractive moduli (as described in Chapter 3) and their gradients.

2.6 Input/Output Variable Definitions

In most applications of the model, interest will probably center on the final path results (primarily total angle error and range error when dealing with radar systems). The elements used as initial input, or computed in the final results are defined below and are depicted in Figure 3 for an upward path from one point to another and in Figure 4 for a short downward path from one point to another. For paths to distant celestial objects special definitions of path results apply and are described later in this section.

Definitions of elements in the final path results for tracing from one point to another are (Figures 3 and 4)

a. H1 - Altitude (MSL) of starting point of ray, expressed in kilometers.

b. H2 - Altitude (MSL) of ending point of ray, expressed in kilometers.

c. ANGLE ($90°-\alpha$) - Zenith angle of starting point of ray, expressed in degrees. Angle α is the elevation angle of the ray.

d. RANGE - Total "apparent" path length of ray (sum of computed electrical retardation along path length and actual path length), expressed in kilometers. The term "apparent" means as observed with a system such as a radar.

e. BETA (β) - Total angle subtended by path at the Earth's center, expressed in degrees. (NOTE: Because the model traces by using the radius of curvature of the local geoid, this angle is not exact, but the error is very small (see Chapter 4).

f. ARRIVAL ANGLE - Zenith angle of ray when it reaches the ending point, expressed in degrees. Note the difference in orientation of this and the initial ANGLE (para. c above).

g. TOTAL BENDING (ψ) - Acute angle formed by intersection of lines tangent to ray at starting and ending points, expressed in degrees, positive for normal curvature (concave downward).

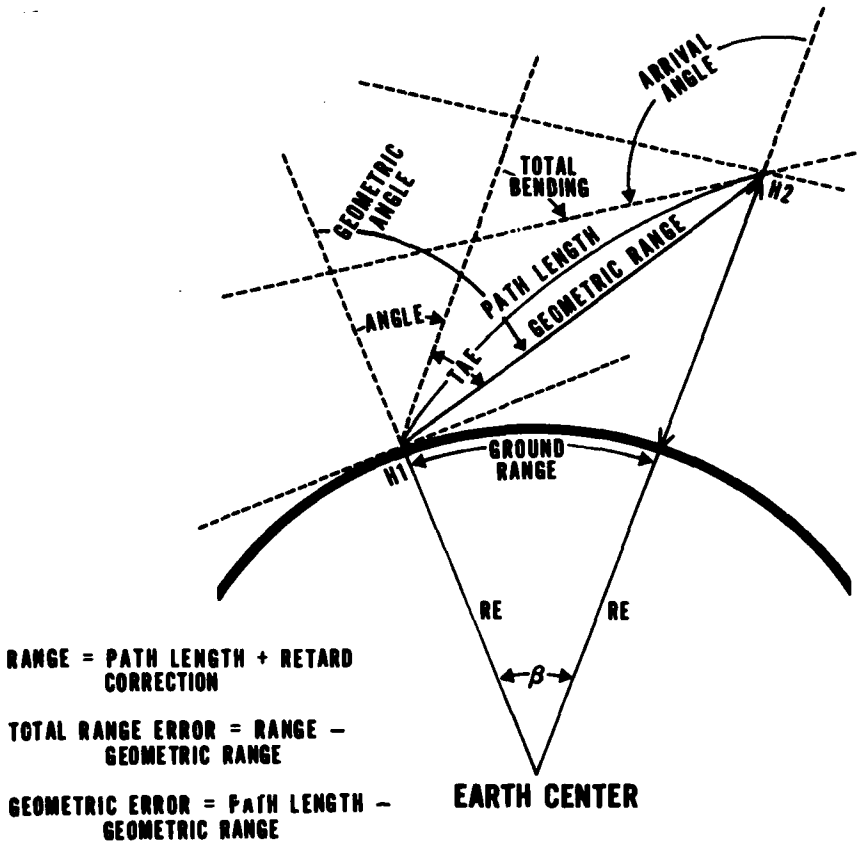

Figure 3. Upward Path Geometry from a Starting Point at Altitude H1 (in this case, H1 = 0) To an Ending Point at Altitude H2.

h. PATH LENGTH (R) - Length of curved (refracted) ray path from starting point to ending point (actual distance energy travels; does not include electrical retardation), expressed in kilometers. NOTE: RANGE = PATH LENGTH + RETARD CORRECTION.

i. GEOMETRIC RANGE (GR) - Straight-line distance between starting point and ending point of ray, expressed in kilometers.

j. GROUND RANGE (rg) - Great circle distance along the Earth's surface from a point directly beneath starting point of ray to a point directly beneath ending point of ray, expressed in kilometers. (NOTE: The model treats the Earth as an oblate spheroid; therefore, this result is only a close approximation; see discussion in Chapter 4).

k. GEOMETRIC ANGLE ($90° - \alpha_G$) - Zenith angle formed by line representing GEOMETRIC RANGE at the ray starting point, expressed in degrees. Angle α_G is the geometric elevation angle (see Figure 8).

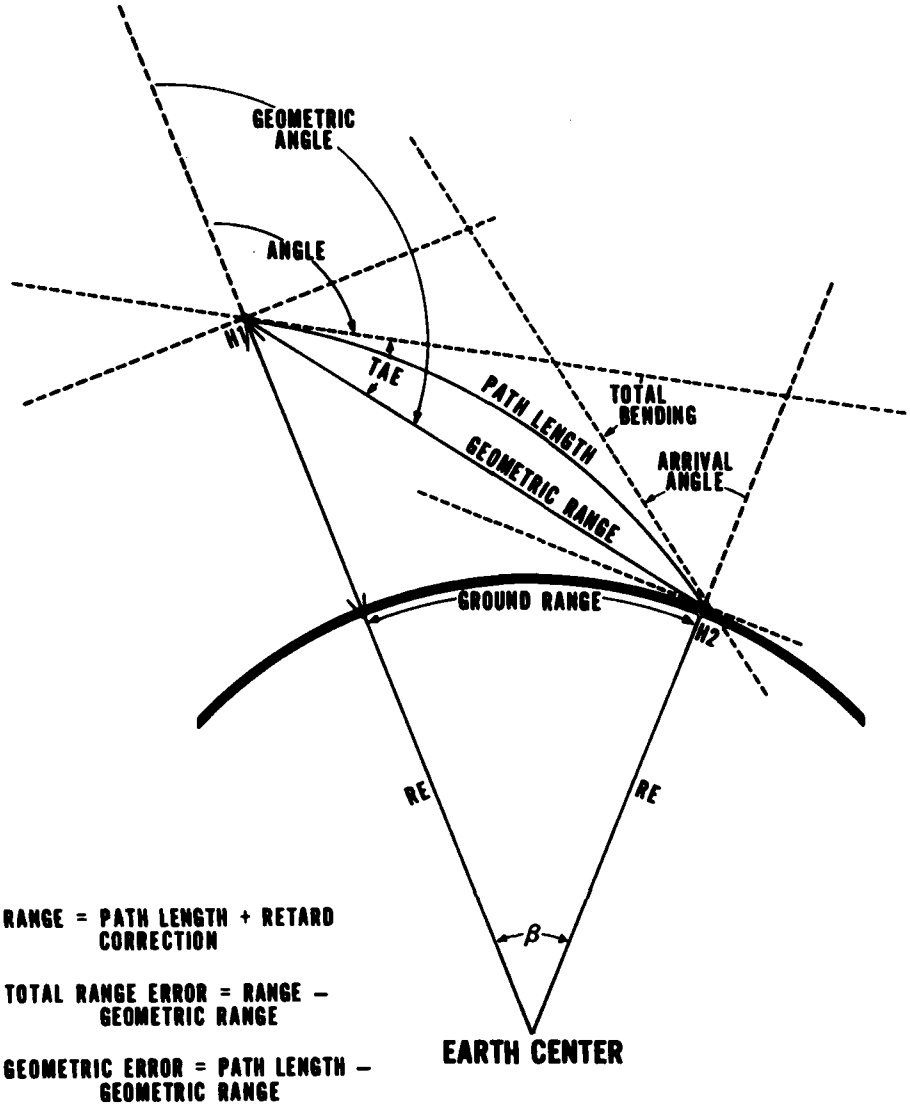

Figure 4. Downward Short Path Geometry from a Starting Point at Altitude H1 To an Ending Point at Altitude H2 (in this case, H2 = 0).

l. RETARD CORRECTION - "Apparent" added distance ray travels along PATH LENGTH due to propagation speed along the path being less than the speed of light in a vacuum.

m. GEOMETRIC ERROR (R_g) - PATH LENGTH minus the GEOMETRIC RANGE.

n. TOTAL RANGE ERROR (TRE) - RANGE minus the GEOMETRIC RANGE.

o. TOTAL ANGLE ERROR (TAE) - Acute angle formed by the intersection of the GEOMETRIC RANGE line and the line tangent to the ray at the starting point, expressed in degrees. Calculated as GEOMETRIC ANGLE minus ANGLE, it is usually referred to as the elevation angle error.

p. Earth Radius (RE) - A constant under the spherical Earth assumption, but a function of latitude when treating the Earth as an oblate spheriod.

q. H3 - Altitude (MSL) of ending point of a two-segment tangent raytrace. The value of H3 must be greater than H2 and flag LEN must be set to 1 (see Figure 2).

For paths to distant celestial objects (those so far from the Earth that adjacent rays are treated as being parallel to each other), the definitions of final path results and corresponding figures reference above must be adjusted. In fact, the only final results of interest will be the GEOMETRIC ANGLE and the TOTAL ANGLE ERROR. Even though the other elements, such as RANGE etc., are computed from H1 to the "top" of the atmosphere, they essentially do not have any bearing on this type of problem. As such, only GEOMETRIC ANGLE and TOTAL ANGLE ERROR will be redefined below and depicted in Figure 5. Note that for type 4

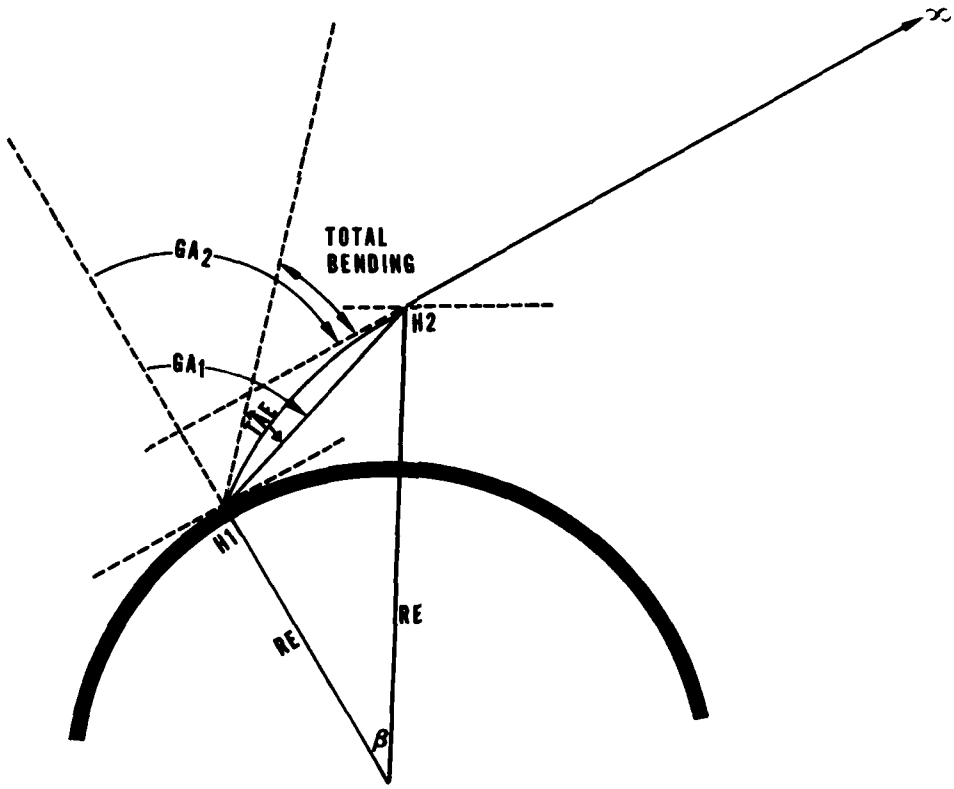

Figure 5. Geometry for Path to Distant Celestial Object.
In this case, H2 must be the "top" of the atmosphere.

cases, input ANGLE is used as the Geometric Angle and the apparent zenith angle is calculated using a Newton-Raphson iteration scheme.

a. GEOMETRIC ANGLE (GA_1) - Zenith angle formed by line representing GEOMETRIC RANGE at the ray position H1, expressed in degrees. Note that this is the value input as ANGLE for type 4 paths.

b. EXOGEOMETRIC ANGLE (GA_2) - Zenith angle formed by intersections of straight line (exospheric) ray path and zenith above H1, expressed in degrees.

c. TOTAL ANGLE ERROR (TAE) - Acute angle formed by the intersection of the GEOMETRIC RANGE line and the line tangent to the ray at H1. It is theoretically equivalent to the TOTAL BENDING term (ψ) defined in paths from one point to another, expressed in degrees. This is because the exospheric ray paths are treated as parallel for an object so distant from the Earth.

Chapter 3

REFRACTION THEORY

3.1 Index of Refraction

The atmospheric index of refraction n is defined as

$$n = \frac{c}{v} \tag{1}$$

where c is the electromagnetic propagation speed in a vacuum (2.997930×10^8 m sec^{-1}) and v is the corresponding speed in the atmosphere. Since the speed of propagation in the atmosphere is slightly smaller than it is in a vacuum, n routinely has values slightly larger than unity (near sea level, approximately 1.0003). A more convenient method of representing n is to express it as a refractive modulus N, where

$$N = (n - 1) \times 10^6 \tag{2}$$

At sea level the atmospheric refractivity ranges from 250 to 450 N-units. Other moduli which are based on similar types of transformations also can be used. One such modulus, M, is related to N by

$$M = N + 157 \times Z \tag{3}$$

where Z is the MSL altitude at which N is computed and is expressed in kilometers. One advantage of working with M instead of N, especially in raytrace plotting programs, is that the Earth's curved surface relative to a refracted beam of energy may be depicted as a straight horizontal line. For his model either N or M is suitable since no plotting occurs. In fact, the model uses N.

The refractive modulus in the Earth's atmosphere decreases approximately exponentially with height. Since a "ray" of electromagnetic energy, when passing through a medium with a variable refractive modulus, will bend toward the portion of the medium with a higher refractive modulus, a typical ray trajectory through the entire troposphere bends downward toward the Earth. Obviously, the ray trajectory through a smaller segment of the atmosphere can bend strongly downward, upward, or even sideways depending on the atmospheric refractive modulus gradient in that segment. For the purposes of this model, the vertical gradient of N is fundamental to the raytracing computations.

3.2 Snell's Law

Since this model assumes that the refractive modulus in the troposphere

changes only with height above a spherical[1] Earth (i.e., horizontal homogeneity is assumed), Snell's Law of refraction may be expressed as [10]

$$n_1 r_1 \cos \alpha_1 = n_2 r_2 \cos \alpha_2 = \text{constant} \tag{4}$$

where n_1 is the index of refraction at a reference altitude H1, r_1 = H1 + RE, (r_1 is the radius of the layer of interest's inner spherical boundry, RE is the radius of the Earth), α_1 is the ray elevation angle at H1, n_2 is the index of refraction at some other altitude H2, r_2 = H2 + RE, (r_2 is the radius of the outer spherical boundary), and α_2 is the ray elevation angle at H2 (see Figure 6).

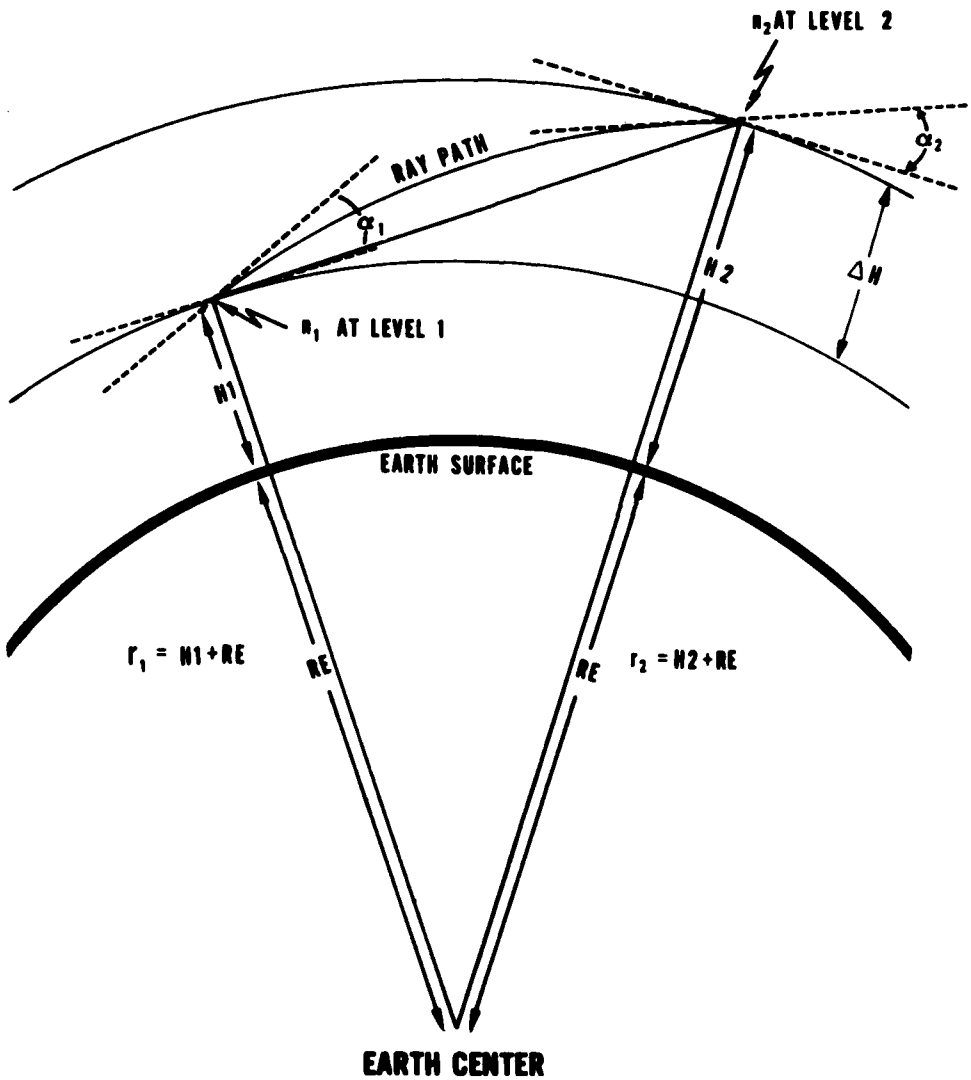

Figure 6. Depiction of Snell's Law Geometry for Spherical Surfaces.

[1] Actually, the radius of curvature of the local geoid, RC, is used in the tracing equations (see Chapter 4). For purposes of this discussion, we assume a spherical Earth.

Since n (or N) must be known to calculate ray paths from Snell's Law, investigators have derived empirical relationships between measured atmospheric elements and N. For propagation frequencies between 30 kHz (10 km) and 115 GHz (0.25 cm), the well-known Smith-Weintraub equation for computing N from atmospheric pressure, temperature, and vapor pressure is generally used. This equation is

$$N = 77.6 \left(\frac{P}{T}\right) + 3.73 \times 10^5 \left(\frac{e}{T^2}\right) \tag{5}$$

where P is pressure in millibars, e is vapor pressure in millibars, and T is absolute temperature in degrees Kelvin. Since both P and e normally decrease with height above sea level, N also decreases with height. In general, raytracing is primarily determined by the gradient of N rather than by the value of N itself. For optical and near-infrared frequencies between about 15 THz (20 micrometers) and 1500 THz (0.2 micrometers), an accepted, wavelength-dependent equation for N is [15]

$$N = 77.6 \left(\frac{P}{T}\right) + 0.584 \left(\frac{P}{T\lambda^2}\right) \tag{6}$$

where P and T are the same as in Equation (5) and λ is the propagation wavelength in micrometers. There are no generally accepted equations for N between 115 GHz and 15 THz; however, the model assumes Equation (5) is valid from 30 kHz through 3 THz (100 micrometers) and Equation (6) is valid for frequencies from 3 THz through 1500 THz. The error in doing this is not well-known and great care must be exercised when applying the model between 115 GHz and 15 THz. It's best used in the windows of relative transparency, and errors of 20 N-units are common even then.

Equations (5) and (6) are used, given input atmospheric data, to compute N for each MSL height associated with the atmospheric data. For the vertical region between the uppermost level of atmospheric data and 50 km, N is assumed to decay exponentially from the last computed value to a value of zero at 50-km altitude. It is assumed that no refraction occurs above 50 km (i.e., ionospheric effects are not currently considered). Above 50 km, data levels are set at increments of DH, which has a default value of 50 km. At the DH default value of 50 km and using a 32-level atmosphere up to the 50-km level, the program is only set up to handle H2 or H3 values of 4000 km or less, because of data array limitations. Of course, above 50 km the raytracing consists only of a straight line. If larger H2 and H3 values are input, the value of DH must be increased accordingly.

Chapter 4

BASIC GEOMETRIC CONSIDERATIONS

This chapter describes the mathematical basis for the ray tracing calculations. The equations are primarily based on the geometry of the tropospheric propagation problem and small number approximations. Some of the numerical techniques used in the model are described in Chapter 5. The reader should acquire from Chapter 4 an understanding of the general framework about which the details of the model are constructed. Some form of the equations are also found in references [8], [10], and [12].

4.1 Basic Tracing Equations

Consider a spherical Earth with a reference level just above the surface of radius r_1 = RE + H1. Consider a spherically concentric tropospheric layer above the Earth with a top at H2 and a radius

$$r_2 = RE + H2 = r_1 + \Delta H$$

where

$$\Delta H = H2 - H1$$

and a ray starting at H1 to an ending point at H2 along a typical refracted path. Further, consider that the vertical gradient of the refractive modulus is constant in the layer, and the ray has a starting point elevation angle of α_1, an ending point elevation angle of α_2 and a straight-line distance (GEOMETRIC RANGE) between H1 and H2 of GR (see Figures 7 and 6). Snell's Law may be rewritten from Equation (4) as

$$n_1 r_1 \cos \alpha_1 = n_2 (r_1 + \Delta H) \cos \alpha_2 \tag{7}$$

or

$$(1 + N_1 \times 10^{-6})\, r_1 \cos \alpha_1 = (1 + N_2 \times 10^{-6})\, (r_1 + \Delta H) \cos \alpha_2 \tag{8}$$

If a and b are small quantities compared to 1.0 the approximations

$$(1 \pm a)^m \simeq 1 \pm ma \tag{9}$$

and

$$(1 \pm a)^m (1 \pm b)^n \simeq 1 \pm ma \pm nb \tag{10}$$

may be used. Remember that $N \times 10^{-6}$ is on the order of 0.0003 and even for an extremely large ΔH value of 50 km, $\Delta H \div r_1$ is approximately 0.008. Using Equation (10) we have

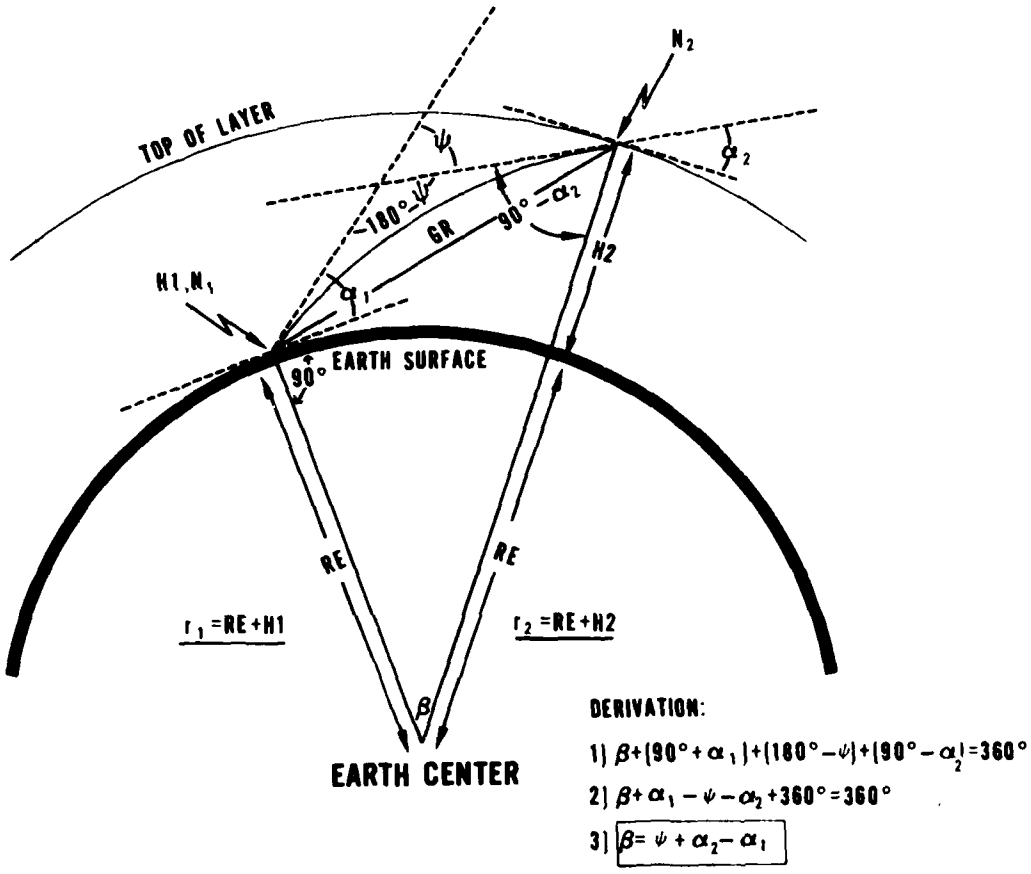

Figure 7. Depiction of Basic Geometry for a Refracted Path Between Two Points Through One Spherical Layer. Also included is the derivation of Equation (15).

$$(1 + N_2 \times 10^{-6}) \div (1 - N_1 \times 10^{-6}) \simeq 1 - (N_1 \times 10^{-6}) + (N_2 \times 10^{-6}) \qquad (11)$$

Simple algebra can be used to write

$$(r_1) \div (r_1 + \Delta H) = [1+(\Delta H \div r_1)]^{-1} \qquad (12)$$

Using the relationship in Equations (10) and (11), Equation (8) may be rewritten as

$$\cos \alpha_2 \simeq (\cos \alpha_1) \div [(1 + \Delta H \div r_1)\ (1 - (N_1 - N_2) \times 10^{-6})] \qquad (13)$$

or simplied further to

$$\cos \alpha_2 \simeq [1 + (N_1 - N_2) \times 10^{-6} - (\Delta H \div r_1)]\ (\cos \alpha_1) \qquad (14)$$

Note that α is dependent only on height ΔH (which is the distance between the levels of interest) and (N_1-N_2), which is the difference in the refractive indices between the H1 and H2 levels of interest. Thus, α is independent of the

shape of the refractive profile between H1 and H2. This fact allows us to determine α at each level of interest independently of other levels [8].

It is clear from Figure 7 that the elevation angle α is related to the total bending ψ and the Earth-centered angle β. Simple geometry gives the relationship

$$\beta = \psi + \alpha_2 - \alpha_1 \tag{15}$$

An equally important relationship, derived by Weisbrod and Anderson [10], is the dependence of the amount of ray bending on the vertical refractive modulus gradient

$$\psi_1 = [2\ (N_1 - N_2) \times 10^{-6}] \div (\tan \alpha_1 + \tan \alpha_2) \tag{16}$$

where ψ is expressed in radians. Total bending is the sum of the layer contributions.

Refractive effects of the atmosphere cause propagation delays and range errors. First consider the geometric error (Rg) defined as the difference between the actual path length (R) and the geometric range (GR) (see Figures 3 and 4). It can be shown geometrically using the law of cosines that

$$GR = [(RE+H1)^2 + (RE+H2)^2 - 2(RE+H1)\ (RE+H2) \cos \beta]^{\frac{1}{2}} \tag{17}$$

Distance R is found similarly by using the form of Equation (17) and summing incremental calculations using incremental changes in height that are smaller than H1-H2 = ΔH and corresponding smaller β values. If the N gradient is constant between H1 and H2, then GR = R. In summary we may write

$$Rg = R - GR \tag{18}$$

Another refractive effect experienced by a beam of electromagnetic energy in the atmosphere is electrical retardation. This represents the slowing of propagation along the refracted path and is independent of bending. If, for example, a beam of energy travels through a homogeneous atmosphere in which the gradient of N is zero, the beam will, because of molecular interaction, travel slower than it would in a vacuum. From Equation (1), we have, given v = ds/dt,

$$(1 + N \times 10^{-6})\ ds = c\ dt \tag{19}$$

From Equation (19) one can see that, when c is employed to compute the distance traveled by propagating energy in a given amount of time, an error of N times 10^6 times true range will result. For a range path increment, R1, defined by levels 1 and 2, with a constant N gradient, the retardation error is

$$\Delta R1 = \frac{(N1 + N2)\ R1}{2 \times 10^6} \tag{20}$$

and the summation over the entire path of the incremental error values will be called Re. Consequently, the total range error, TRE, will be the sum of Re and the added geometric distance, Rg, along the total refracted path length

$$TRE = Re + Rg \tag{21}$$

Typically the value of Re is much larger than the value of Rg. More detailed discussions of these basic concepts are given in references [8], [10], and [12].

Two additional geometric relationships are depicted in Figure 8 [9] and may be written as follows

$$\alpha_G = \cos^{-1} \frac{[(RE + H1) - (RE + H2) \cos \beta]}{GR} - \frac{\pi}{2} \tag{22}$$

and

$$AE = \alpha_1 - \alpha_G \tag{23}$$

where α_G is the elevation angle of a nonrefracted path GR, and AE is the elevation angle error (all angles expressed in radians).

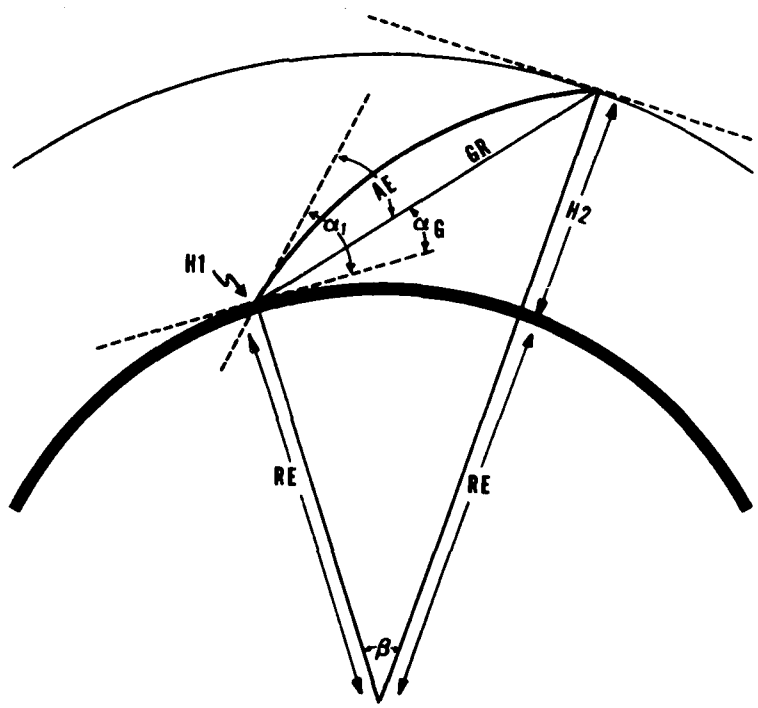

Figure 8. Depiction of the GEOMETRIC RANGE, GR, and Its Relationship to the Elevation Angle Error, AE.

Figures 6, 7, and 8, depict the simple geometry for bending through one atmospheric layer concentric to a spherical Earth. In practice, the ray must traverse many successive layers in the atmosphere defined by reported levels of atmospheric data. In addition, the model treats the Earth as an oblate spheroid. The consequences of this are outlined in the following paragraphs.

4.2 Earth Radius and Radius of Curvature

The form of Snell's Law used by the model (Equation (7)) assumes a spherical Earth, but the critical point is not the Earth radius per se, but the curvature of the surface. Therefore, the radius required by Equation (7) is the radius of curvature of the Earth's surface in the vicinity of the ray path. To a second approximation, the Earth is an oblate spheroid and RAYTRA assumes this in various calculations (Figure 9).

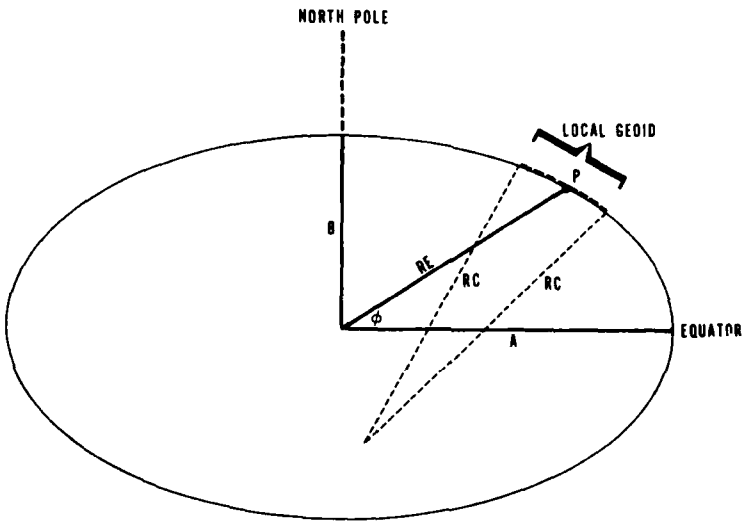

Figure 9. Depiction of the Earth as an Oblate Spheriod. The symbol ϕ is the latitude at point P, RE is the computed Earth radius at point P, and RC is the radius of curvature of the local geoid about point P.

RAYTRA calculates the radius, RE, and the radius of curvature, RC, for the latitude of the atmospheric data or, if the latitude is unknown, a default latitude of 45 degrees. The radius is computed by [13]

$$RE = A(1 - f \sin^2 \phi) \tag{24}$$

where A is the semimajor (equatorial) radius (6378.139 km) and f is a constant, approximately equal to (A - B)/A, with a currently accepted value of 3.35282×10^{-3} ; B is the semiminor (polar) radius (6356.750 km) and ϕ is the latitude.

The radius of curvature of an oblate spheroid is given by [12]

$$RC = \frac{A^2}{B\,(1 + C\cos^2\phi)^{\frac{1}{2}}\,(1 + C\cos^2\phi\cos^2\theta)} \tag{25}$$

where A, B, and ϕ are defined above; $C = A^2/B^2 - 1$; and θ is the ray azimuth, clockwise from north. The model currently assumes an azimuth of zero (north) unless the user specifies the ray azimuth.

The path subtense, BETA, input by the user, is measured from the center of the Earth and would normally be calculated from a knowledge of the latitudes and longitudes of H1 and H2. Since the tracing algorithms use the radius of curvature, RC, BETA must be converted on input and reconverted on output. The equations used for these conversions are discussed below and depicted in Figure 10.

If a value of BETA is supplied by the user, it is assumed to subtend the ground range, rg, from the center of the Earth (β_{in}). The ground range rg is held constant, and the subtense from the center of curvature (β_c) is calculated by

$$\beta_c = \beta_{in}\left(\frac{RE}{RC}\right) \tag{26}$$

Once tracing is complete, the subtense must be reconverted. It is assumed that the user is interested in the value from H1 to H2, shown as β_{out} in Figure 10. From the Law of Cosines, this is

$$\cos(\beta_{out}) = \frac{[(RE + H1)^2 + (RE + H2)^2 - r^2]}{2(RE + H1)\,(RE + H2)} \tag{27}$$

This choice for the output value of BETA is somewhat arbitrary, but seems the best choice; the difference between it and β_{in} is very small in any case (note that Figure 10 is greatly exaggerated), and the use of β_c in the tracing equations increases the overall accuracy of the results.

Equations (1)-(6) in Chapter 3 and (7)-(27) in this chapter form the basis for solving the many different types of raytracing problems of which the model is capable. Special iterative techniques are used in conjunction with the above-mentioned equations to solve those problems where the initial zenith angle is unknown (see Chapter 5). The particular combinations and sequence of equations used depend on which input variables are known and provided by the user.

4.3 Input Geometry Variables and Path Types

There are many possible combinations of input geometry variables for which the model will calculate the refracted path. In general, those variables not supplied (or not used as inputs by the model) are calculated, and the output will consist of a consistent set of all geometry variables as defined in Section 2.6. These various combinations are discussed briefly in the following paragraphs and

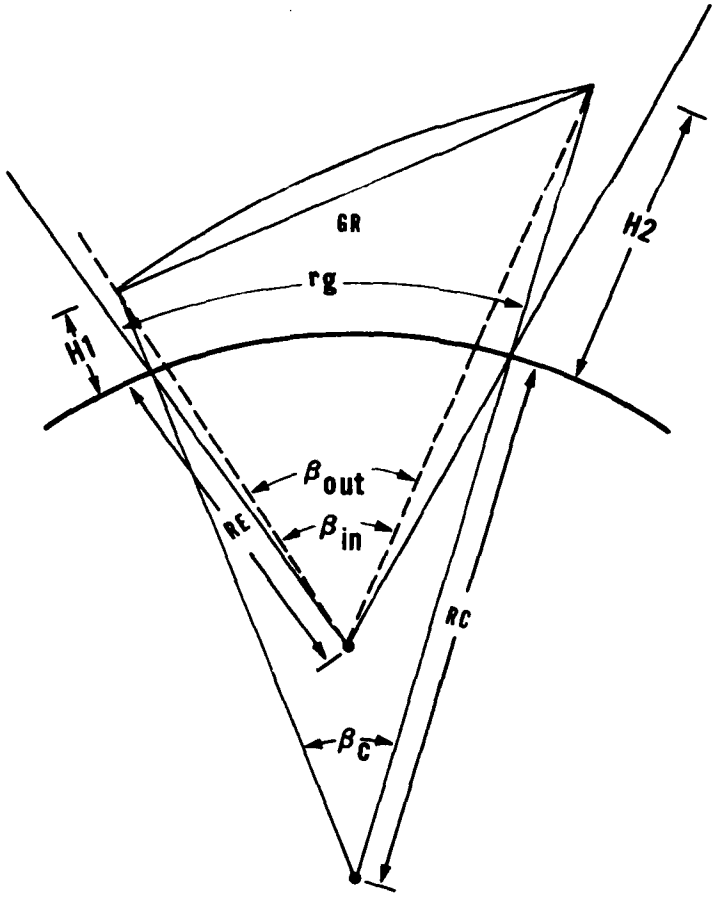

Figure 10. The Relationship Among the Input, Output, and Internal Values of the Variables BETA: The "Earth-centered" Substense of the Path. The difference stems from treating Earth as an oblate spheroid.

the methods of calculation outlined more fully in Chapter 5. For convenience and ease of understanding, they will be grouped by general methods of calculation.

There are three basic path types used in RAYTRA, which are selected by setting the variable ITYPE to 2 or 3 or 4. This notation is consistent with that used in the AFGL program LOWTRAN. Path type 1 is not used by RAYTRA. Type 2 is a path between two points and encompasses most of the paths usually encountered in refraction problems. Types 3 and 4 involve paths to or from a distant (at "infinity"), usually celestial object, where rays arriving at the "top" of the atmosphere (nominally 50 km) are assumed to be parallel. Type 3 paths require that H1 and the apparent (observed) ANGLE at H1 be input. Type 4 involves the true (unrefracted) or ephemeris angle at H1. Otherwise, the geometry is like ITYPE 3. In ITYPE 3 cases, geomtric angle and total angle error are calculated. In ITYPE 4 cases, apparent zenith angle and total angle error are calculated.

Paths of ITYPE 2 are further divided into those for which the ray zenith angle at H1 is known, and those for which it is not. Acceptable combinations of

input geometry variables for Type 2 paths are outlined below. Note that H1 must always be supplied.

a. H1, ANGLE and at least one of H2, RANGE, or BETA, are supplied. If more than one of the latter are supplied, all but one are ignored, with the priority of selection being the order given above. For example, if H1, ANGLE, H2, and BETA are given, BETA is ignored. For all three possible combinations described in this paragraph tracing begins at H1, at zenith angle ANGLE, and proceeds until the condition specified by the third variable is satisfied, or the ray either leaves the defined atmosphere, intersects the surface, encounters a duct, or reaches a tangent point (see Figure 2). If H2 is supplied, tracing terminates when the ray reaches an altitute of H2. If ANGLE is greater than 90 degrees (downward path) and H2 is less than H1, tracing terminates on the first or second crossing of the level H2, depending on whether the input variable LEN (used to define longest of two paths) is set to 0 or 1, respectively (see Figure 2). If RANGE or BETA are supplied instead of H2, tracing terminates when the appropriate value of apparent ("radar") range or Earth-centered subtense is reached. This normally requires iteration on the last path segment (between two atmospheric data levels) as outlined in Chapter 5.

b. H1 and H2 are supplied, but <u>not</u> ANGLE. The path is assumed tangent at H2 (α_2=0). If H2 is greater than or equal to H1, the program cannot compute a path and an error message is written. If H2<H1, the roles of H1 and H2 are temporarily exchanged and tracing proceeds from H2 to H1 with an initial zenith angle at 90 degrees. Results are stored and written in the normal order from H1 to H2. If H3 has also been supplied (see Figure 2) and is greater than H2 and flag LEN=1, tracing continues beyond H2 and terminates at H3. If LEN is set to 1 and H3 is not provided, a default value of 50 km is used for H3 and the long path is still computed. This allows an arbitrary tangent path to be defined by the end points H1 and H3 and the tangent height (lowest point of the path) H2. This is the only case in which the variable H3 has any meaning to the tracing algorithms.

c. H1, H2, and RANGE are supplied, but <u>not</u> ANGLE. An initial estimate of ANGLE is made, assuming a standard refraction model (the 4/3 Earth approximation [14]) and tracing proceeds to H2 as in paragraph a, above. The resulting value of the apparent range is compared to the input, RANGE, and tracing proceeds iterativly until they match with the limit specified by the internal program variable RNGACC (currently 0.0001 km). The iterative scheme is discussed in detail in Chapter 5. To avoid possible confusion over the value of flag LEN, the input heights may be temporarily exchanged to assure that tracing proceeds from the lower altitude to the higher.

d. H1, H2, and BETA are supplied, but not ANGLE or RANGE. The procedure is identical to that in paragraph c with BETA assuming the role of RANGE. The precision criteria is in the variable BETACC (=RNGACC/RC$\simeq$0.000001 radians).

Input altitudes are instrumental in defining the "top" of the atmosphere. Subroutine REFMOD will construct a refractive modulus profile from the surface (assumed to be the lowest level of the atmospheric data) to a height equal to the maximum of H1, H2, H3, or 50 km. All refractive moduli above 50 km are currently set to zero. To avoid array overflow, if the maximum heights exceeds 4000 km, the value of DH must be specified as a number larger than the default of 50 km as explained in Chapter 3.

Chapter 5

SPECIAL NUMERICAL TECHNIQUES

5.1 Cases where ANGLE is Known

The tracing equations introduced in Chapter 4 are applied in a straight-forward manner if the initial zenith angle is known. The elevation angle at the next layer boundary (α_b) is calculated by Equation (13). If $\cos(\alpha_b)$ is greater than one, a ray maximum or minimum exists somewhere at an unknown level HM within the layer and is found by setting $\cos(\alpha_b) = 1$ and solving for HM in place of H2 in Equation (13) as illustrated below.

The general form of Equation (13) is

$$\cos\alpha_b = \frac{\cos\alpha_a}{(1 + \Delta Z/r_a)\ (1 + \partial n/\partial z\ \Delta Z)}$$

where α = elevation angle

subscript a - refers to the known (previous level) value.
subscript b - refers to the unknown (next level) value.
ΔZ = in general the layer thickness, $H_b - H_a$, in our case $HM - H_a$
r_a = the distance from the center of curvature to H_a (i.e. $R_c + H_a$)
$\frac{\partial n}{\partial z}$ = the vertical refractive index gradient; $(n_b - n_a)/(H_b - H_a)$

At a maximum or minimum point, $\cos\alpha_b = 1$, giving

$$(1 + \frac{\Delta Z}{r_a})\ \ (1 + \frac{\partial n}{\Delta z}) = \cos\alpha_a$$

rearranging

$$(\frac{\partial n}{\partial z}/r_a)\ (\Delta Z)^2 + (\frac{1}{r_a} + \frac{\partial n}{\partial z})\ \Delta Z + (1 - \cos\alpha_a) = 0$$

This equation may be written in the form of the quadratic formula,

$$\Delta Z = \frac{-B \pm \sqrt{B^2 - AC}}{A}$$

where $A = \frac{1}{r_a}\ \frac{\partial n}{\partial z}$

$$B = (1/2)\left(\frac{1}{r_a} + \frac{\partial n}{\partial z}\right)$$

$$C = 1 - \cos\alpha_a$$

Of the two possible solutions, we always want the smaller in absolute magnitude. Rather than finding both and testing, we force calculation of the smaller by

$$\Delta Z = \pm \left| \frac{|B| - \sqrt{B^2 - AC}}{A} \right| = \pm \text{ FACTOR} = HM - H_a$$

where the plus sign is for upward paths (i.e., a maximum point). Rewriting, we get

$$HM = H_a \pm \text{FACTOR} \tag{28}$$

This procedure assumes a constant refractive gradient between H_a and H_b. This assumption is also used to estimate a value for N at HM.

Once α_b is determined (either zero as discussed above or some larger number), the bending (ψ) is calculated by Equation (16), the subtense, β, by Equation (15), and the range increment within the layer is found using Equation (17). The retard correction is found by Equation (20) the incremental values for the layer are added to running sums, and the procedure is repeated for the next layer unless one of the stopping criteria is met. If the trace is to be terminated by an altitude (usually H2), the summation stops when that point is reached. If, however, RANGE or BETA are used as the stopping criteria, an iteration must be performed between the last two given levels bounding the last layer, since the next height, H_b', is unknown.

If the apparent range is used to terminate the trace, the last between-level increment is approximated by a right triangle of sides DR, DH, and a horizontal range increment (see Figure 11a). The triangle is solved for DH, the new layer is retraced and the resultant range increment compared to the required increment, and the procedure is repeated (Figure 11b) until the error is less than a predetermined value as given by the variable RNGACC (currently 0.001 km). The procedure is analagous for downward paths. If the estimated H2 is initially closer to H_b than H_a, the iteration starts from H_b, thereby reducing the number of iterations required. If the ray is nearly horizontal, numerical instability may develop and the calculated step, DH, is multiplied by a relaxation factor, currently 0.9.

If the subtense, β is used to terminate the trace, iteration on the last layer proceeds by a Newton-Raphson technique. We may describe the relationship between β and the height, expressed as the total distance from the center of curvature, r, in the general functional form

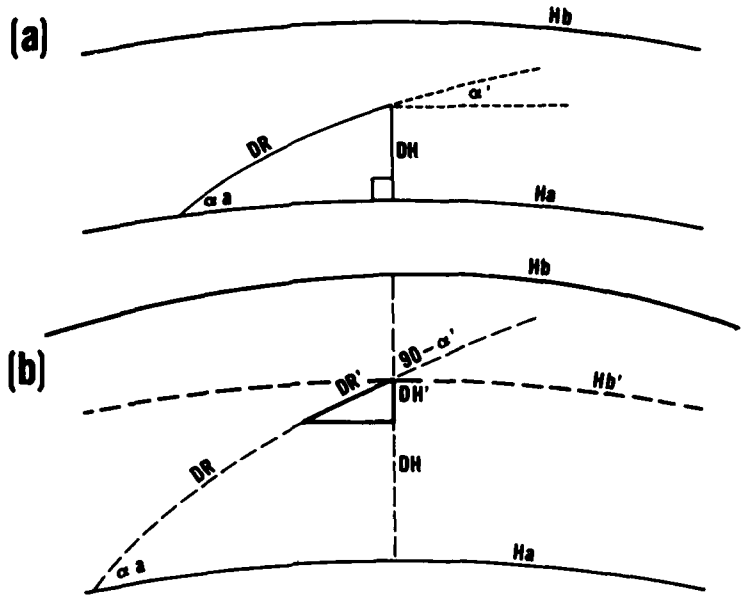

Figure 11. (a) The Right Triangle Approximation, Used Iteratively to Find the Value of H2 Which Gives the Required Input RANGE. (b) Second Iteration of the Right Triangle Approximation Shown for an Upward Path.

$$\beta = f(r)$$

Expanding in a Taylor series about some r_0 (initially r_a) and truncating higher order terms gives

$$\beta = \beta_0 + \frac{\partial\beta}{\partial r}(r - r_0)$$

Solving for the height increment, Δr from level a gives

$$\Delta r = (\beta' - \beta_0) \div \left(\frac{\partial\beta}{\partial r}\right) \tag{29}$$

where β' is the required value of subtense as found by Equation (26) in Chapter 4. This equation is applied iteratively, using the new r_0 and updating β_0 by retracing, until convergence to within BETACC. The key to success is the calculation of the partial derivative. In many Newton-Raphson procedures, it is estimated numerically by finite differencing. This practice often results in slow convergence and numerical instability. For this model, it was determined analytically and is evaluated by the program. It is derived as follows. We differentiate Equation (15) by r, giving

$$\frac{\partial\beta}{\partial r} = \frac{\partial\alpha_b}{\partial r} + \frac{\partial\psi}{\partial r} - \frac{\partial\alpha_a}{\partial r} \tag{30}$$

The last term is zero since α_a does not change. The first term on the right side is found by differentiating Equation (7). The left side of the result is zero since the value at level a does not change. This gives (dropping subscript b)

$$0 = -nr \sin \alpha \frac{\partial \alpha}{\partial r} + r \cos \alpha \frac{\partial n}{\partial r} + n \cos \alpha \frac{\partial r}{\partial r}$$

Since $\partial r/\partial r = 1$ and $\partial n/\partial r$ is constant within a layer, we obtain, substituting γ_n for $\partial n/\partial r$ and rearranging

$$\frac{\partial \alpha}{\partial r} = \frac{\cos \alpha (r\gamma_n + n)}{n\ r \sin \alpha}$$

Dividing, expanding, and discarding small terms

$$\frac{\partial \alpha}{\partial r} \simeq (\cot \alpha)(\frac{1}{r} + \gamma n) \tag{31}$$

The second term on the right side of Equation (30) is found by differentiating Equation (16) with Δn substituted for $(N_0 - N)\ 10^{-6}$

$$\frac{\partial \Psi}{\partial r} = \frac{-2}{\tan \alpha_a + \tan \alpha_b} \frac{\partial (\Delta n)}{\partial r} + \frac{2(\Delta n)}{(\tan \alpha_a + \tan \alpha_b)} \frac{\partial (\tan \alpha_a + \tan \alpha_b)}{\partial r}$$

Again, since the variables at level a are constant, this simplifies to (dropping the subscript b)

$$\frac{\partial \Psi}{\partial r} = \frac{-2\ \gamma_n}{\tan \alpha_a + \tan \alpha} - \frac{\psi}{\tan \alpha_a + \tan \alpha} \frac{\partial \tan \alpha}{\partial r}$$

$$= \frac{-1}{\tan \alpha_a + \tan \alpha} (2\ \gamma_n + \psi \sec^2 \alpha \frac{\partial \alpha}{\partial r}) \tag{32}$$

where $\partial \alpha/\partial r$ is calculated by Equation (31). Equations (30), (31), and (32) allow the iterative solution by Equation (29). The procedure is quite stable and converges within three to five iterations. The only problem occurs when $\tan \alpha = 0$ (see Equation 31). In that case, Δr is reduced by 1 percent and the procedure is repeated.

5.2 Cases where ANGLE is Unknown

When the initial zenith angle is unknown, cases (c) and (d) in Chapter 4, the general procedure is to guess at a value of ANGLE, perform the trace, compare the final values, compare the value of RANGE or BETA with the desired values, adjust the value of ANGLE, and repeat until within RNGACC or BETACC of the desired

values of RANGE or BETA, respectively. The method of updating involves a Newton-Raphson scheme similar to that outlined in Section 5.1.

5.2.1 Iteration to BETA. The truncated Taylor expansion gives

$$\beta = \beta_e + \frac{\partial\beta}{\partial\alpha_0}(\alpha_0' - \alpha_0)$$

where α_0 is the estimated elevation angle at H1, β_e is the result of a trace using α_0, and α_0' is the new guess for α_0. Rearranging

$$\alpha_0' = \alpha_0 + \frac{(\beta - \beta_e)}{(\partial\beta/\partial\alpha_0)} \tag{33}$$

The calculation of $\partial\beta/\partial\alpha_0$ proceeds in manner similar to that in Section 5.1, except that β is treated as the sum of incremental values over all atmospheric layers in the path

$$\frac{\partial\beta}{\partial\alpha_0} = \sum_{i=1}^{n} \frac{\partial\beta_i}{\partial\alpha_0}$$

where n is the total number of layers, i runs consecutively from H1 to H2 and i = 1 at H1 ($\alpha_0 \equiv \gamma_1$). We will develop the solution for one layer, from i to i + 1, which is evaluated by the program as tracing proceeds, accumulating a sum in the process. We will see that the minimum points require special treatment and we here define the index of the minimum point as i = m.

Again, given Equation (15), we have

$$\frac{\partial\beta_i}{\partial\alpha_0} = \frac{\partial\alpha_i}{\partial\alpha_0} + \frac{\partial\psi}{\partial\alpha_0} - \frac{\partial\alpha_{i+1}}{\partial\alpha_0} \tag{34}$$

From Equation (7)

$$-n_0 r_0 \sin\alpha_0 \frac{\partial\alpha_0}{\partial\alpha_0} = n_i r_i \sin\alpha_i \frac{\partial\alpha_i}{\partial\alpha_0}$$

$$+ n_i \cos\alpha_i \frac{\partial r_i}{\partial\alpha_0} + r_i \cos\alpha_i \frac{\partial n_i}{\partial\alpha_0}$$

where $\frac{\partial\alpha_0}{\partial\alpha_0} = 1$, of course.

For $i \neq m$, the last two terms are zero and for i = m (the layer past the minimum point), the first term on the right is zero since $\alpha \equiv 0$. Therefore, for $i \neq m$,

$$\frac{\partial \alpha_i}{\partial \alpha_0} = \frac{n_0 r_0 \sin \alpha_0}{n_i r_i \sin \alpha_i}$$

Again, from Equation (7)

$$n_0 r_0 = n_i r_i \frac{\cos \alpha_i}{\cos \alpha_0}$$

so

$$\frac{\partial \alpha_i}{\partial \alpha_0} = \frac{\tan \alpha_0}{\tan \alpha_i} \qquad \text{for } i \neq m \tag{35}$$

Similarly

$$\frac{\partial \alpha_{i+1}}{\partial \alpha_0} = \frac{\tan \alpha_0}{\tan \alpha_{i+1}} \qquad \text{for } i + 1 \neq m \tag{36}$$

for i = m, we are left with

$$n_0 r_0 \sin \alpha_0 = -n_i \frac{\partial r_i}{\partial \alpha_0} - r_i \frac{\partial n_i}{\partial \alpha_0} \qquad i = m \tag{37}$$

which will be used below. Now, for the second term in Equation (34); from Equation (16), we get

$$\frac{\partial \psi_i}{\partial \alpha_0} = \frac{\partial\ (n_i - n_{i+1})/\partial \alpha_0}{1/2\ (\tan \alpha_i + \tan \alpha_{i+1})}$$

$$- \frac{\psi_i}{1/2\ (\tan \alpha_i + \tan \alpha_{i+1})} \frac{\partial\ [1/2\ (\tan \alpha_i + \tan \alpha_{i+1})]}{\partial \alpha_0}$$

For $i \neq m$ and $i + 1 \neq m$, the first term is zero. Differentiating the tangent functions and using Equations (35) and (36), we get

$$\frac{\partial \psi_i}{\partial \alpha_0} = \frac{-\psi_i \tan \alpha_0}{\tan \alpha_i + \tan \alpha_{i+1}} \left(\frac{1}{\cos \alpha_i \sin \alpha_i} + \frac{1}{\cos \alpha_{i+1} \sin \alpha_{i+1}}\right) \tag{38}$$

for $i \neq m$, $i+1 \neq m$.

For $i \neq 1 = m$, (the layer <u>before</u> the tangent point), we get

$$\frac{\partial \psi_i}{\partial \alpha_0} = \frac{-2}{\tan \alpha_i} \frac{\partial n_{i+1}}{\partial \alpha_i} - \frac{\psi_i \tan \alpha_0}{\sin^2 \alpha_i} \qquad i+1 = m \tag{39}$$

By the chain rule

$$\frac{\partial n_i}{\partial \alpha_i} = \frac{\partial n_i}{\partial r_i}\frac{\partial r_i}{\partial \alpha_0} = \gamma \frac{\partial r_i}{\partial \alpha_0} \tag{40}$$

where γ is the gradient from i to i + 1. Substituting into Equation (37) and rearranging

$$-n_0 r_0 \sin \alpha_0 \approx \frac{\partial r_i}{\partial \alpha_0} (n_i + r_i \gamma) \tag{41}$$

Back substituting into Equation (40) gives

$$\frac{\partial n_i}{\partial \alpha_0} = \frac{-n_0 r_0 \sin \alpha_0}{(n_i/\gamma) + r_i}$$

Substituting into Equation (39) results in

$$\frac{\partial \psi_i}{\partial \alpha_0} = \frac{2 n_0 r_0 \sin \alpha_0}{\tan \alpha_i (n_{i+1}/\gamma + r_{i+1})} - \frac{\psi_i \tan \alpha_0}{\sin^2 \alpha_i} \qquad i+1 = m \tag{42}$$

For i = m, the derivation is similar; however, since the atmosphere is spherically symmetric, $\alpha_i(i+1 = m) = -\alpha_{i+1}(i = m)$ and the derivative is symmetric around the minimum point, i.e.,

$$\frac{\partial \psi_i}{\partial \alpha_0} \quad i+1 = m = \frac{\partial \psi_i}{\partial \alpha_0} \quad i = m$$

Consequently

$$\frac{\partial \beta_i}{\partial \alpha_0} = \frac{\tan \alpha_0}{\tan \alpha_i} - \frac{\tan \alpha_0}{\tan \alpha_{i+1}}$$

$$- \frac{\psi_i \tan \alpha_0}{\tan \alpha_i + \tan \alpha_{i+1}} \left(\frac{1}{\cos \alpha_i \sin \alpha_i} + \frac{1}{\cos \alpha_{i+1} \sin \alpha_{i+1}}\right) \tag{43}$$

$i \neq m, \; i+1 \neq m$

$$\frac{\partial \beta_i}{\partial \alpha_0} = \frac{\tan \alpha_0}{\tan \alpha_i} + \frac{2 n_0 r_0 \sin \alpha_0}{\tan \alpha_i (n_{i+1}/\gamma + r_{i+1})} - \frac{\psi_i \tan \alpha_0}{\sin^2 \alpha_i} \qquad i+1 = m \tag{44}$$

$$\frac{\partial \beta_i}{\partial \alpha_0} = \frac{\tan \alpha_0}{\tan \alpha_{i+1}} + \frac{2 n_0 r_0 \sin \alpha_0}{\tan \alpha_{i+1} (n_i/\gamma + r_i)} - \frac{\psi_i \tan \alpha_0}{\sin^2 \alpha_{i+1}} \qquad i = m \tag{45}$$

5.2.2 Iteration to RANGE. The Newton-Raphson equation is

$$\alpha_0' = \alpha_0 + (R - R_e)/(\partial R/\partial \alpha_0) \tag{46}$$

where R is the desired apparent range and R_e is the estimate of R calculated from simple geometry. We begin by rewriting Equation (17) for a single layer as

$$R_i = (r_i^2 + r_{i+1}^2 - 2\, r_i r_{i+1} \cos \beta_i)^{\frac{1}{2}} \tag{47}$$

Differentiating by α_0 gives

$$\frac{\partial R_i}{\partial \alpha_0} = \frac{1}{2R_i}\, 2R_i \frac{\partial r_i}{\partial \alpha_0}\, 2r_{i+1} \frac{\partial r_{i+1}}{\partial \alpha_0} + 2r_i\, r_{i+1} \sin \beta_i \frac{\partial \beta_i}{\partial \alpha_i}$$

$$- 2r_{i+1} \cos \beta_i \frac{\partial r_i}{\partial \alpha_0} - 2r_i \cos \beta_i \frac{\partial r_{i+1}}{\partial \alpha_0} \tag{48}$$

For $i \neq m$, $i+1 \neq m$; $\frac{\partial r_i}{\partial \alpha_0} = 0$ and

$$\frac{\partial R_i}{\partial \alpha_0} = \frac{1}{R_1} (r_i\, r_{i+1} \sin \beta_i \frac{\partial \beta_i}{\partial \alpha_0}) \qquad i \neq m,\ i+1 \neq m \tag{49}$$

where $\partial \beta_i / \partial \alpha_0$ is given by Equation (43).

For $i = m$ and $i + 1 = m$, there is an additional term, $G(\alpha_0)$. From Equation (43), we have (ignoring the term in Equation 49)

$$G(\alpha_0) = \frac{1}{R_i} (r_{i+1} \frac{\partial r_{i+1}}{\partial \alpha_0} - r_i \cos \beta_i \frac{\partial r_{i+1}}{\partial \alpha_0}) \qquad i + 1 = m$$

Using Equation (41) and rearranging gives

$$G(\alpha_0) = - \frac{1}{R_i} (r_{i+1} - r_i \cos \beta_i) \frac{n_0 r_0 \sin \alpha_0}{(n_{i+1} + r_{i+1} Y\ \gamma)} \qquad i + 1 = m \tag{50}$$

Since the atmosphere is symetric, it can be easily shown the

$$G(\alpha_0)_{i=m} = G(\alpha_0)_{i+1=m}$$

Therefore;

$$\frac{\partial R_i}{\partial \alpha_0} = \frac{1}{R_i} (r_i\, r_{i+1} \sin \beta_i \frac{\partial \beta_i}{\partial \alpha_0}) + G(\alpha_0) \tag{51}$$

where $G(\alpha_0) = \begin{cases} \text{(Eq. 50)}; & i = m,\ i + 1 = m \\ 0 \quad ; & i \neq m,\ i + 1 \neq m \end{cases}$

5.3 Path Types 3 and 4

For paths to distant celestial objects, the rays beyond modeled atmospheric influences are assumed to be parallel (see Figure 12).

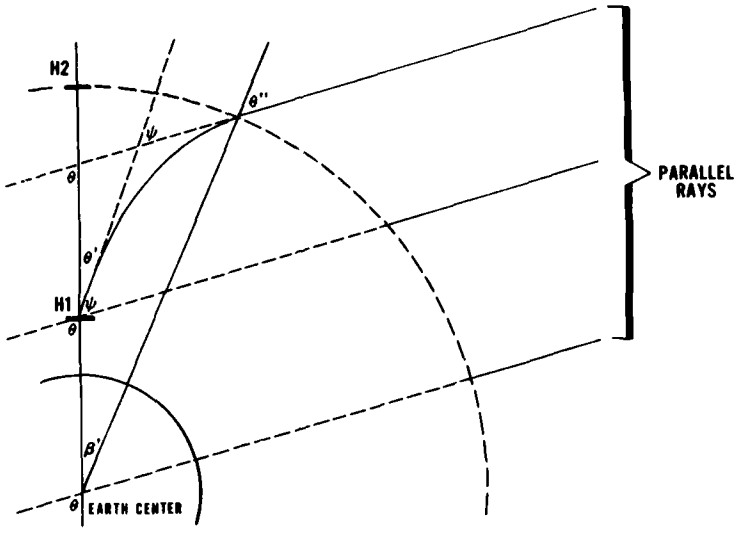

Figure 12. Geometry for Celestial Path Types 3 and 4.

For path type 3, the apparent zenith angle, θ', is known and the geometric zenith angle, θ, is the desired result. As pointed out in Chapter 2, they are related by the total bending, ψ, from H1 to the "top" of the atmosphere

$$\theta = \theta' + \psi \tag{52}$$

The procedure for type 3 paths, then, is to trace from H1 to the "top" of the atmosphere with ANGLE = θ' and calculate θ by Equation (52).

For path type 4, θ is known at θ' as the desired result. Equation (52) cannot be used since ψ is unknown. The approach, therefore, is to iterate in a manner similar to that above.

The Newton-Raphson Equation is

$$\theta'_{j+1} = \theta'_j + (\theta - \theta_j)/\frac{\partial\theta}{(\partial\theta')_j} \tag{53}$$

where the subscripts refer to the jth iteration. The derivative could be found from Equation (52), but a more convenient form is given as follows. Rewrite Equation (15) in terms of the zenith angles in Figure 12.

$$\beta' = \psi + \theta' - \theta'' \tag{54}$$

Solving for ψ and substituting in Equation (52) gives

$$\theta = \theta'' + \beta' \tag{55}$$

Differentiating

$$\frac{\partial\theta}{\partial\theta'} = \frac{\partial\theta''}{\partial\theta'} + \frac{\partial\beta'}{\partial\theta'} \tag{56}$$

The second term was developed in Section 5.2.1. Recall that

$$\frac{\partial\beta'}{\partial\theta'} = - \frac{\partial\beta'}{\partial\alpha_0} \tag{57}$$

The first term in Equation (56) can be derived in a manner analogous to Equation (35) as

$$\frac{\partial\theta''}{\partial\theta'} = \frac{\tan\theta''}{\tan\theta'} \qquad \theta' \neq 0 \tag{58}$$

For an initially horizontal path ($\theta' = 0$) we recall that $n = 1.0$ at the "top" of the atmosphere, giving, from an intermediate stage of the derivation

$$\frac{\partial\theta''}{\partial\theta'} = \frac{n_0 r_0}{r_{top} \cos\theta''} \qquad \text{where} \quad \theta' = 0 \tag{59}$$

This gives

$$\frac{\partial\theta}{\partial\theta'} = \frac{\partial\theta''}{\partial\theta'} - \frac{\partial\beta'}{\partial\alpha_0} \tag{60}$$

where $\partial\theta''/\partial r'$ is given by Equations (58) or (59) and $\partial\beta'/\partial\alpha_0$ is given in Section 5.2.1.

Chapter 6

ATMOSPHERIC DATA PROCESSING

6.1 Atmospheric Data Sources

As outlined in Chapter 2, final processing of the atmospheric (upper-air) data is accomplished by the program BLDATM. Output data form BLDATM may be input to either RAYTRA or the latest AFGL version of LOWTRAN. As mentioned earlier, the input upper-air data (which includes header information) for BLDATM may come from four sources.

a. USAFETAC DATSAV raob data after it has been processed first by ENAPRECON and then by ENAEXTR.

b. Upper-air point analysis data after it has been prepared by the program ENS2AMOD and processed by PASELECT.

c. Modeled upper-air data derived from AFGL's LOWTRAN program (LOWTRN). There are six models to choose from which are already constructed as disk files. They are

1976S.LOW;1 - 1976 US Standard Atmosphere
ARTSU.LOW;1 - Subarctic Summer (60°N, July)
ARTWI.LOW;1 - Subarctic Winter (60°N, January)
MIDSU.LOW;1 - Midlatitude Summer (45°N, July)
MIDWI.LOW;1 - Midlatitude Winter (45°N, January)
TROPI.LOW;1 - Tropical (15°N)

The above models are profiles that contain columns of height (km), temperature (K), pressure (mb), absolute humidity (g/m^3), ozone density (g/m^3), and level number. (NOTE: Ozone density is used only in LOWTRN, and all data extend upward to 100 kilometers even though RAYTRA does not use the data above 50 kilometers).

d. Upper-air data which are input into BLDATM from the terminal at time of execution (i.e., an interactive response-to-query mode). For this option, the program requires, by level, input of height (m, km, ft, or thousands of feet) or pressure (mb or in. Hg) but not both. (NOTE: A surface pressure must be input when heights are used, and a surface elevation must be input when pressures are used.) Further, it requires input, by level, of temperature (°C, °K, or °F) and one moisture term. The moisture terms permitted are relative humidity (%), absolute humidity (g/m^3), mixing ratio (nondimensional; i.e., not parts per thousand), dew-point temperature (°C, °K, or °F), or dew-point depression (°C or °F).

6.2 Allowance for Missing Data

Missing data allowances for the above sources are

a. Raob data. No two or more successive missing levels or dew-point depression from the surface to the level where the temperature drops below -40°C, hereafter called the -40°C level, are allowed. (NOTE: This level rarely occurs at exactly -40°C; therefore, the highest level falling between -40°C and -30°C is used.) All dew-point depressions above the -40°C level are considered missing and are computed to the top of the sounding. A constant mixing ratio of 3×10^{-6} is assumed at and above the 150-mb level, and linear height interpolation is used to compute any required dew-point depressions between the -40°C level and the 150-mb level. If a 150-mb level is not reported, the height of a fictitious 150-mb level is computed hydrostatically (using a density of 2.4152 kg/m^3 and a gravitational acceleration of 9.7647 m/sec^2, both taken from the 1976 U.S. Standard Atmosphere [9] for the 150.19-mb pressure level). Dew-point depressions for missing levels above the -40°C level are calculated using Equation (70) below. All other data must be present and are assumed correct.

b. Point Analysis data. No missing temperatures, pressures, heights, or absolute humidities are allowed from surface to 100 thousand feet. (NOTE: BLDATM will not process any data above 100 thousand feet.)

c. Modeled data. No missing data are allowed.

d. Response-to-query data. No two or more successive levels of any moisture term are allowed from the surface to the -40°C level. All moisture terms above this level are considered missing. Dew-point depressions are computed to the top of the sounding by the same method described for raob input. Formulas used to convert input moisture terms into dew-point depressions are described later in this chapter. All other data must be present and are assumed correct.

6.3 Data Adjustment

All linear height interpolations use the following formula

$$X_2 = X_1 + \frac{(X_3 - X_1)(Z_2 - Z_1)}{(Z_3 - Z_1)} \tag{61}$$

where X_2 is the missing variable at height Z_2, X_3 and X_1 are the known variables at the respective heights Z_3 and Z_1 which bound Z_2.

Whatever the type of input data, BLDATM will produce output (for each observation) that contains header information and columns of MSL heights (km), temperatures (K), pressures (mb), absolute humidities (g/m^3), and level numbers. No missing data are allowed in this output.

Should the top of the upper-air data terminate at a relatively low level, such as 850 mb, the data will still be processed for input into RAYTRA or LOWTRN. In all cases, RAYTRA will perform an exponentially decaying interpolation of

refractive moduli from the top of the data to the 50-km level. The refractive modulus N at the 50-km level is assumed to be zero.

If either H1 or H2 are found to be below the surface level of atmospheric data, they will automatically be adjusted upward to coincide with the surface level by the program RAYTRA.

6.4 Pressure/Height and Humidity Formulas

The basic formulas used in BLDATM to compute/convert moisture terms are in most meteorological textbooks that deal with thermodynamics. Given the numerous assumptions in RAYTRA and LOWTRN, as well as the inaccuracies associated with most upper-air measurements, these equations are of sufficient accuracy. They are

$$e = 6.11 \times 10 \exp\left(\frac{\alpha Td}{Td + b}\right) \tag{62}$$

(Tetan's formula [14]) where e is vapor pressure (mb), Td is dew-point temperature (°C), α is 7.5 (over water, $T \geq -40°C$) and 9.5 (over ice, $T \leq -40°C$), and b is 237.3 (over water) and 265.5 (over ice). The saturation vapor pressure e_s is computed by the same formula except that the temperature T (°C) is used instead of Td.

$$W = \frac{0.62197\ e}{P - e} \tag{63}$$

where W is the nondimensional mixing ratio, e is the vapor pressure (mb) and P is the total atmospheric pressure (mb).

$$RH = \frac{100\ e}{e_s} \tag{64}$$

where RH is relative humidity (%), e is vapor pressure (mb), and e_s is saturation vapor presure (mb)

$$AH = \frac{216.494\ e}{T} \tag{65}$$

where AH is absolute humidity (g/m^3), e is vapor pressure (mb), T is temperature (K), and 216.494 is a constant derived from the ratio of the molecular weight of water (18.0160) over the universal gas constant (8.31436×10^7 erg/Mol °K), or

$$AH = \rho W \tag{66}$$

where AH is absolute humidity (g/m^3), ρ is dry air density (g/m^3), and W is the nondimensional mixing ratio.

$$T^* = \frac{T(1 + W/0.62197)}{1 + W} \tag{67}$$

where T* is virtual temperature (K); T is temperature (K), and W is the nondimensional mixing ratio.

$$P_2 = P_1 \exp\left(\frac{2g}{R} \frac{(Z_1 - Z_2)}{(T^*_1 + T^*_2)}\right) \tag{68}$$

where P2 is pressure (mb) at height Z_2 (km), P1 is pressure (mb) at height Z_1, T^*_2 and T^*_1 are corresponding virtual temperatures (K), g is gravitational acceleration (km/sec^2), and R is the dry gas constant. (NOTE: 2g/R is computed to be 68.283 °K per km when using consistent units.) This is an approximation for nonzero temperature lapse rates. The error is negligible for typical radiosonde data, but may be significant for very thick layers (e.g., greater than 10 km). It may be solved for height, giving

$$Z_2 = Z_1 - \frac{R}{2g} (T^*_1 + T^*_2) \ln \left(\frac{P_2}{P_1}\right) \tag{69}$$

Equations (62) and (65) are combined to compute dew-point depressions by the following equation

$$DEP = \frac{b \log X}{a - \log X} \tag{70}$$

where

$$X = \frac{AH\ (T + 273.2)}{(216.494)(6.11)}$$

and where DEP is dew-point depression (°C), T is temperature (°C), and the other symbols and constants are the same as in Equations (62) and (65).

Equations (61-70) form the basis for all data computations/conversions in BLDATM, remembering that height, pressure, temperature, and absolute humidity are always the desired output. The exact form and sequence of the equations used depend on which type of data is used for input. Equations (68) and (69) are used to compute pressures from heights or heights from pressures whenever arbitrary response-to-query input is used. Since T* is a function of P, an improved value of P2 is obtained by iterating on Equation (68). Convergence occurs when the separate solutions for P2 differ by no more than 0.1 mb.

Section 7.3 describes a typical listing of output from BLDATM.

Chapter 7

RAYTRACE PACKAGE USER'S MANUAL

7.1 General Overview

The raytrace package consists of three main programs: BLDCOM, BLDATM, and RAYTRA. The program BLDCOM produces a command file that contains program-control information, geometry data, and frequency data. BLDATM creates an atmospheric data file. These two files, the command file, and the atmospheric data file, are the input files used by RAYTRA, the raytracing program.

Two versions of each program are available. One version is designed for interactive execution on the DEC10 system at BBNB in Boston; the other version is designed for batch execution on the IBM 4341 at USAFETAC, Scott AFB.

7.1.1 Purpose of User's Manual. This chapter will serve as a user's manual for both versions of all three programs. It contains the information required to successfully execute the three programs: BLDCOM, BLDATM, and RAYTRA. Also, example input data and output results are provided.

7.1.2 General Information on Programs. The program BLDCOM, as its name implies, builds (BLD) Command (COM) files. The name for this program on the IBM is ENABLDCO. The program BLDATM builds (BLD) Atmospheric (ATM) data files. The IBM name is ENABLDAT. The two files produced by this program are used as input to the RAYTRA program. This is the actual raytracing program. On the IBM, it is named ENARAYTR.

Some symbols that will be used throughout this chapter are explained below.

a. <CR> is used to identify a carriage return provided by the user at the time of execution. Obviously, this pertains to the interactive versions only.

b. /F is seen after some variable names as they are requested by the program. It signifies that the variables must be entered in real format with the decimal included. Again, this pertains only to the interactive versions.

c. /I specifies that the variable requested by the program must be entered in integer format. This pertains only to the interactive versions.

Latitudes and longitudes must be entered as indicated below.

(1) Positive latitude implies north,

(2) Negative latitude implies south,

(3) Positive longitude implies west, and

(4) Negative longitude implies east.

7.2 Interactive BLDCOM - General

The BLDCOM program at BBNB interactively creates a command file for RAYTRA. This command file provides RAYTRA with program-control information, geometry data, and frequency data.

7.2.1 Interactive BLDCOM - Structure. BLDCOM is composed of the main program, two system subroutines, and two user subroutines (Figure 13).

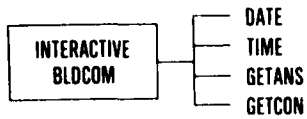

Figure 13. Interactive BLDCOM Structure.

The main program queries the user for input that will eventually be used as the program-control information, geometry data, and frequency data in the ray-tracing program, RAYTRA.

The two system subroutines, data and time, retrieve the current data and time for header information.

The two user subroutines, GETANS and GETCON, retrieve user-provided responses to yes/no questions and user-provided confirmations to all input, respectively. Confirmations are required for all input. Should the user key in the wrong information, he can negate his response by entering the character 'N' when confirmation is requested. Any other entry, included a carriage return, will be considered a positive confirmation.

7.2.2 Interactive BLDCOM - Performance. BLDCOM is a simple program. Presently, it merely reads the user's input and writes it, with unformatted writes statement, to disk. For this reason, it requires only three K code storage and about one CPU second to handle one set of records. Although its present purpose appears superfluous (since it could easily be an input routine of the RAYTRA program), future uses and requirements justify its existence as a separate entity.

7.2.3 Interactive BLDCOM - Data Base Requirements. Since all input is provided by the user at the time of execution, no data base is required for BLDCOM.

7.2.4 Interactive BLDCOM - Description of Inputs. Other than informational questions, the interactive version of BLDCOM requires a minimum of four records

as input. These records are required input to RAYTRA. The following is an explanation of these input records.

The first record is the label record. It is an ASCII description of the ray-trace project. It is input only once at the start of the program. It can be no longer than 80 characters.

The second record is the program-control record. It consists of four variables: ITYPE, LEN, IPRNT, and IOUT. All are integers and all must be separated by a comma when entered. This record can be entered an infinite number of times, allowing many combinations of program-control to be tested on the same geometry, frequency, and/or atmospheric data. The following is an explanation of the four parameters.

ITYPE	= 1 :	A horizontal path (not yet implemented).
	= 2 :	A normal path between two points in the atmosphere.
	= 3 :	Paths to distant objects. The angle must be supplied. It is the apparent (observed) angle.
	= 4 :	Paths to distant objects. The angle must be supplied. It is the true (geometric) angle.
LEN	= 0 :	Normal operation of the program which selects the shorter path when applicable. (Single segments)
	= 1 :	The longer path is selected when applicable. (Two segments)
IPRNT	= 0 :	Atmospheric data and level results are not printed.
	= 1 :	Atmospheric data are printed.
	= 2 :	Level results are printed.
	= 3 :	Atmospheric data and level results are printed.
IOUT	= 0 :	No output files are created.
	= 1 :	A hard copy output file is created and the final results, as well as the information requested by the variable IPRNT, are written to this file.
	= 2 :	A binary output file is created and the final results are written to this file.
	= 3 :	Both the hard copy and the binary output files are created.

For almost all purposes, the suggested entry for the first record is 2,0,3,1. This entry will trace a normal path between two objects, cause the shorter path to be taken, cause a hard copy output file to be opened, and direct level results and atmospheric data to this output file.

The third record is the geometry record. It consists of seven parameters: H1, H2, ANGLE, RANGE, BETA, H3, and DH. All of these variables are real and, as in record #1, they must be separated by a comma when entered. This record also can be entered an infinite number of times, thus allowing several geometry situa-

tions to be tested against the same frequency and atmospheric data. Following is an explanation of these variables.

H1	=	The initial or sensor altitude in kilometers.
H2	=	The final or the target altitude in kilometers.
ANGLE	=	The zenith angle at H1 in degrees.
RANGE	=	The apparent or radar path length in kilometers.
BETA	=	The Earth-centered angle between H1 and H2 in degrees.
H3	=	The altitude in kilometers of the exospheric level. The RAYTRA default value is 1000.0 km. It is used for two-segment tangent raytraces.
DH	=	The height intervals used between the 50-km level and the exospheric level. The RAYTRA default value is 50.0 km.

Since the purpose of the raytrace program is to compute some of these variables, it is not necessary that they all be entered. The following is an explanation of the possible entries. See Chapter 4 for more detail.

H1 must always be supplied. If angle is given, at least one of H2, RANGE, BETA must be supplied. If more than one of them is given, priority, in decreasing order, is H2, RANGE, and BETA. If angle is not supplied, acceptable combinations are

(1)	H2	- Path assumed tangent at H2 (H3 must be given in this case if the two segment path is desired)
(2)	H2,RANGE	- Iterates to desired RANGE
(3)	H2,BETA	- Iterates to desired BETA
(4)	H2,RANGE,BETA	- Same as H2,RANGE - BETA ignored
(5)	RANGE	- Horizontal path -- Not implemented
(6)	BETA	- Horizontal path -- Not implemented
(7)	RANGE,BETA	- Not implemented

Should a variable not be supplied by the user, its omission must be indicated by entering a -1.0 in the appropriate position.

The final record is the ray E-M frequency record. It consists of only one variable, V1. It is real, and as in the case of the third record, the decimal must be provided. V1 is the frequency in wave numbers (CM**-1).

7.2.5 Interactive BLDCOM - Description of Processing. Since BLDCOM only reads the user's input and writes it to an output file, no processing is required.

7.2.6 Interactive BLDCOM - Description of Output. BLDCOM produces a file that is written entirely with unformatted write statements. Following Section 7.2.7

(Description of program execution) is an example of the output produced by BLDCOM.

7.2.7 Interactive BLDCOM - Program Execution. Figure 14 below is an example of a BLDCOM run. It has been lettered at various points to allow for the full explanation that follows the figure.

The following is a step-by-step description of Figure 14.

(a) To start the execution of the program, enter the program name after the BBNB EXEC prompt '@'.

(b) This is the program header line. It includes the current date, time, and version.

(c) This statement confirms that the output file is opened.

(d) The user can receive an explanation of the input parameters if he enters 'Y' at this point. The explanation given is the same explanation given in Section 7.2.4. Note that all user input is prompted by the program prompt, 'BLD>'.

(e) After every input by the user, a confirmation is required. In this case a carriage return was entered as a positive confirmation.

(f) First, the user is asked to enter the label record.

(g) Notice in this case that the label was not entered correctly, thus an 'N' was entered as a negative confirmation.

(h) When a negative confirmation is made, the request is repeated.

(i) Next, the program-control information is requested.

(j) Next, the geometry information is requested.

(k) Next, the frequency information is requested.

(l) When all records have been entered once, the user can enter another set of records. As in the example, another set of records can be entered if the user replies 'Y' to this question. If an 'N' is entered, the program will end.

(m) If another set of records is requested, the user can change each record previously entered by replying 'Y' to this question. If an 'N' is entered, the previous program-control record will be repeated.

```
(A)  @BLDCOM.SAV;1

(B)          <ETAC-DX>BLDCOM - VERSION 13 - ON 18-OCT-81  AT 19:56 EST.

(C)  DISK P1 OPENED FOR BINARY OUTPUT TO RAYTRA.COM.

(D)  DO YOU WANT AN EXPLANATION OF THE INPUT PARAMETERS (Y OR N)?
     BLD>N
(E)  [CONFIRM]<CR>

(F)  ENTER LABEL (MAX 80 CHAR).
     BLD>TESTT FOR RAYTRACE.
(G)  [CONFIRM]N

(H)  ENTER LABEL (MAY 80 CHAR).
     BLD>TEST FOR RAYTRACE.
     [CONFIRM]<CR>

(I)  ENTER ITYPE/I,LEN/I,IPRNT/I,IOUT/I
     BLD>2,3,3,1
     [CONFIRM]<CR>

(J)  ENTER H1/F,H2/F,ANGLE/F,RANGE/F,BETA/F,H3/F,DH/F
     BLD>3.0,30.0,45.0,-1.0,-1.0,-1.0,-1.0
     [CONFIRM]<CR>

(K)  ENTER V1/F
     BLD>10.0
     [CONFIRM]<CR>
(L)  DO YOU WANT TO ENTER ANOTHER SET OF RECORDS (Y OR N)?
     BLD>Y
     [CONFIRM]<CR>

(M)  IS A NEW PROGRAM CONTROL CARD REQUESTED (Y OR N)?
     BLD>N
     [CONFIRM]<CR>

(N)  IS A NEW GEOMETRY CONTROL CARD REQUESTED (Y OR N)?
     BLD>N
     [CONFIRM]<CR>

(O)  IS A NEW FREQUENCY CONTROL CARD REQUESTED (Y OR N)?
     BLD>X
(P)  X IS NOT A LEGAL RESPONSE.  PLEASE REPLY WITH Y OR N.
     BLD>Y
     [CONFIRM]<CR>

(Q)  ENTER V1/F
     BLD>1.0
     [CONFIRM]<CR>

(R)  DO YOU WANT TO ENTER ANOTHER SET OF RECORDS (Y OR N)?
     BLD>N
     [CONFIRM]<CR>

(S)  BINARY TAPE OUTPUT TO RAYTRA.COM ON DTSK P1 CLOSED.

(T)  END OF EXECUTION
(U)  CPU TIME: 2.16 ELAPSED TIME: 3:11.78
     EXIT.
     ^C
(V)  @
```

Figure 14. Example of BLDCOM Execution.

(n) The same is true with the geometry record as stated above.

(o) Once again, the same is true as above. But, in this case the user has opted to change the original frequency data.

(p) Notice that if any response other than the permitted 'Y' or 'N' is entered, it is not accepted.

(q) Question (K) is repeated for frequency data.

(r) Again, another set of records can be entered.

(s) This is to confirm that the output file has been closed.

(t) System-provided statement that indicates the end of execution.

(u) The CPU and wall time is given by the system.

(v) Control is returned to the executive.

The following is an example of the output produced by the example BLDCOM execution described above (Figure 15). Notice that the output file name is not user changeable. It is RAYTRA.COM.

```
23330171040, 1747606192, 1752595480, -2327624000064, -31401300992, 15-17315143740,
, 0, 3, 1,
1.000000E+00,   30.00000   ,   45.00000   ,  -1.000000   ,  -1.000000   ,  -1.000000   ,  -1.000000
 10.00000   ,
2, 0, 3, 1,
2.000000E+00,   30.00000   ,   45.00000   ,  -1.000000   ,  -1.000000   ,  -1.000000   ,  -1.000000
 1.000000   ,
```

Figure 15. Example of Interactive BLDCOM Output.

7.3 Interactive BLDATM - General

The BLDATM program at BBNB interactively creates an atmospheric data file to be used by RAYTRA. This file provides RAYTRA with the atmospheric data used in the raytracing.

7.3.1 Interactive BLDATM - Structure. BLDATM is composed of the main program, two system subroutines, and 28 user subroutines (Figure 16).

The main program, BLDATM, has seven segments that direct the reading of various data input types, processing this data, performing various checks on the data, and outputting the data in the requested format(s).

The first segments determines the output type(s) requested by the user. The user can, at the start of the program, choose to receive a hard copy output file that is human readable. He may receive a hard copy of all observations as they

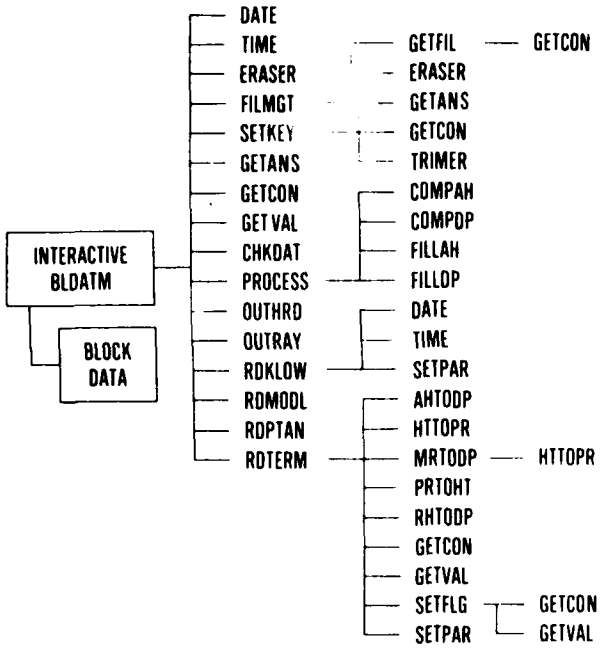

Figure 16, Structure of Interactive BLDATM.

are processed or of only the observations that are discarded during processing. A raytrace-formatted output file is always created.

The six remaining segments are all contained within the main loop of the program. They can be performed an infinite number of times. However, the first segment is executed only once.

The second segment determines the input type to be processed. The user can select (1) KLOW, (2) point analysis (not yet implemented), (3) model atmospheres, or (4) interactive input from the terminal, since this segment is within the main loop, any number of input types can be selected.

Once the input is determined, the interior loop of the program is entered. The five remaining segments are contained within this interior loop. When the selected input file is exhausted, the interior loop is exited. Control is then returned to the main loop, and the user can select another input type or stop execution.

The third segment of BLDATM reads the requested file one observation at a time. An observation is an upper-air sounding containing height, pressure (unless input by the user, in which case it will contain only pressure or height), temperature, and a moisture parameter.

When an observation has been read successfully, the fourth segment directs its processing. If an error occurs while reading the observation, this segment

is bypassed and the observation is discarded. While being processed, various data checks are performed to insure that the observation is useful.

If an observation is successfully processed, it enters the fifth segment that performs a quick check to insure that all variables required by raytrace are available. If the observation cannot be processed successfully, the final check is not used. The observation is discarded.

The sixth segment is entered if the observation successfully completes the final check. At this point, the observation is output as requested. If the observation has missing data, it is not output at this time. Instead, it is discarded.

The final segment handles all the discarded observations. A discarded observation is written only to the hard copy output file, if one is requested, since it cannot be used by raytrace. All discarded observations are labeled on the hard copy. Finally, this segment counts the discarded observations and keeps track of the number of the discarded obsvations so the user can be given an account at the end of the program.

The above segment concludes the interior loop. Once all observations in an input file have been processed, the user must select another input file, or the main loop ends, totals are written to the screen, and the program ends.

The two system subroutines, date and time, retrieve the current data and time for header information.

Following is an explanation of the user subroutines.

(01)	BLOCK DATA	:	This routine is used to initialize constants.
(02)	AHTODP	:	This routine converts absolute humidity to dew point.
(03)	CHKDAT	:	Subroutine CHKDAT checks to see that all data required by RAYTRA is available.
(04)	COMPAH	:	COMPAH computes absolute humidity given temperature and dew-point temperature.
(05)	COMPDP	:	Absolute humidities above the -40°C level are computed in this routine.
(06)	ERASER	:	This routine erases ASCII buffers.
(07)	FILLAH	:	Missing levels of absolute humidity are filled in by this routine.
(08)	FILLDP	:	Missing levels of dew-point depressions are filled in by this routine.
(09)	FILMGT	:	All file management is handled by this routine.
(10)	GETANS	:	Answers to Y/N questions are retrieved in this routine.

(11) GETCON : GETCON retrieves confirmations to the user's responses.

(12) GETFIL : Input files are retrieved by this routine.

(13) GETVAL : Integer values to the various questions are retrieved in this routine.

(14) HTTOPR : Subroutine HTTOPR converts height to pressure.

(15) MRTODP : MRTODP converts mixing ratio to dew points..

(16) OUTHRD : Subroutine OUTHRD writes the hard copy.

(17) OUTRAY : The raytrace-formatted output file is written by this routine.

(18) PROCES : This routine is responsible for directing the processing of the observations.

(19) PRTOHT : PRTOHT converts pressure to height.

(20) RDKLOW : KLOW files are read by this routine.

(21) RDMODL : Model atmospheres are read by this routine.

(22) RDPTAN : When point analysis files are written in a machine-readable format, they will be read by this routine.

(23) RDTERT : This routine reads input from the terminal.

(24) RHTODP : Subroutine RHTODP converts relative humidity to dew points.

(25) SETFLG : The input-types, when terminal input is selected, are determined by this routine.

(26) SETKEY : The observations in KLOW file to be processed are determined by this routine.

(27) SETPAR : This routine initializes parameters.

(28) TRIMER : This routine trims input lines to determine their length.

For further information on the above subroutines, see the program internal documentation.

7.3.2 Interactive BLDATM - Performance. BLDATM requires about 25 K storage. On the average, 2 CPU second is required to process one observation (an atmospheric profile of height, pressure, temperature, and absolute humidity).

7.3.3 Interactive BLDATM - Data Base Requirements. BLDATM accepts three input types: (1) input from KLOW-formatted files as produced by the ENA extract program from DATSAV, (2) input from model atmospheres (the 1976 Standard Atmosphere, the arctic winter and summer, the tropical winter and summer, and the tropical models), and input provided by the user at the terminal. Therefore, to execute the program using KLOW-formatted files or model atmosphere-formatted files, a file in the appropriate format is required. Figure 17 is an example of an observation in the KLOW format, and Figure 18 is an example of an observation in the model format.

Notice that the KLOW observation consists of a header line and a finite number of data lines.

917660	28.22	177.87	77	1	1	0	0	1	13	2	24	PMUY 1 2
1	1013.0		13	292.6		4.5	-1	-1.0	-1.0E+00			
2	1000.0		113	291.2		6.0	-1	-1.0	-1.0E+00			
3	956.0		508	288.6		6.0	-1	-1.0	-1.0E+00			
4	931.0		824	286.6		8.5	-1	-1.0	-1.0E+00			
5	850.0		1465	284.2		0.7	-1	-1.0	-1.0E+00			
6	774.0		2278	281.2		4.2	-1	-1.0	-1.0E+00			
7	765.0		2373	280.0		6.0	-1	-1.0	-1.0E+00			
8	737.0		2601	279.6		7.0	-1	-1.0	-1.0E+00			
9	700.0		3098	276.8		5.0	-1	-1.0	-1.0E+00			
10	628.0		3973	269.7		1.1	-1	-1.0	-1.0E+00			
11	550.0		4959	266.7		30.0	-1	-1.0	-1.0E+00			
12	507.0		5645	261.3		30.0	-1	-1.0	-1.0E+00			
13	500.0		5740	261.5		30.0	-1	-1.0	-1.0E+00			
14	471.0		6207	259.7		30.0	-1	-1.0	-1.0E+00			
15	454.0		6320	258.1		30.0	-1	-1.0	-1.0E+00			
16	449.0		6564	257.5		30.0	-1	-1.0	-1.0E+00			
17	414.0		7174	251.7		30.0	-1	-1.0	-1.0E+00			
18	400.0		7420	250.5		30.0	-1	-1.0	-1.0E+00			
19	382.0		7764	249.7		30.0	-1	-1.0	-1.0E+00			
20	358.0		8235	246.1		30.0	-1	-1.0	-1.0E+00			
21	340.0		8605	242.9		30.0	-1	-1.0	-1.0E+00			
22	300.0		9471	237.3		30.0	-1	-1.0	-1.0E+00			
23	289.0		9743	234.7		30.0	-1	-1.0	-1.0E+00			
24	284.0		9868	235.1		-1.0	-1	-1.0	-1.0E+00			
25	250.0		10723	237.5		-1.0	-1	-1.0	-1.0E+00			
26	202.0		12138	219.5		-1.0	-1	-1.0	-1.0E+00			
27	200.0		12183	219.5		-1.0	-1	-1.0	-1.0E+00			
28	175.0		13124	214.9		-1.0	-1	-1.0	-1.0E+00			
29	150.0		14005	211.1		-1.0	-1	-1.0	-1.0E+00			

Figure 17. KLOW - Formatted Observations.

The header line consists of the following variables: The block station number (BLKNUM), the latitude (STALAT), the longitude (STALON), the year, the month, the date, the time in ZULU, the observation number in the KLOW file, the station elevation (STAELE), the station type, the number of levels in the observation, the station call letters, the station codes, and the control number. In BLDATM, this header line is read in the format (3X,I6,F7.2,F8.2,1X,3I2,I4,I3,2I3,I4, 1X,A4,I3,I2).

Following the header line, the parameters read by BLDATM are: the level, pressure, height, temperature, dew-point depression, wind direction and speed, and density in the format (7X,I3,F7.I,I8,2F7.1,F4.0,F5.1,E10.3).

For further explanation of the parameters used in BLDATM, and consequently in RAYTRA, see the internal program documentation.

Note that model atmosphere is the 1976 Standard Atmosphere. It, like the other five model atmospheres, consists of a header line and 33 data lines.

The header line consists of the following: Levels, NM, and MODMSG. Levels is the number of levels in the obsvation, NM is an integer that defines the observation to RAYTRA, and MODMSG is an ASCII label that describes the model. This header is read in the following format: (I5,I5,10A4).

33	6	1962 U. S. STANDARD ATMOSPHERE			
0.000	288.1	0.1013E+04	0.5000E+01	0.5000E-04	1
1.000	281.6	0.8986E+03	0.4270E+01	0.5000E-04	2
2.000	275.1	0.7950E+03	0.2900E+01	0.5000E-04	3
3.000	268.7	0.7012E+03	0.1800E+01	0.5000E-04	4
4.000	262.2	0.6166E+03	0.1170E+01	0.4600E-04	5
5.000	255.7	0.5405E+03	0.6400E+00	0.4600E-04	6
6.000	249.2	0.4722E+03	0.5800E+00	0.4500E-04	7
7.000	242.7	0.4111E+03	0.2100E+00	0.4000E-04	8
8.000	236.2	0.3565E+03	0.1200E+00	0.5200E-04	9
9.000	229.7	0.3080E+03	0.4600E-01	0.7100E-04	10
10.000	223.2	0.2650E+03	0.1800E-01	0.9200E-04	11
11.000	216.8	0.2270E+03	0.0200E-02	0.1300E-03	12
12.000	216.6	0.1940E+03	0.3700E-02	0.1600E-03	13
13.000	216.6	0.1658E+03	0.1800E-02	0.1700E-03	14
14.000	216.6	0.1417E+03	0.8400E-03	0.1400E-03	15
15.000	216.6	0.1211E+03	0.7200E-03	0.2100E-03	16
16.000	216.6	0.1035E+03	0.6100E-03	0.2400E-03	17
17.000	216.6	0.8850E+02	0.5200E-03	0.2800E-03	18
18.000	216.6	0.7565E+02	0.4400E-03	0.3200E-03	19
19.000	216.6	0.6467E+02	0.4000E-03	0.3500E-03	20
20.000	216.6	0.5529E+02	0.4000E-03	0.3600E-03	21
21.000	217.6	0.4729E+02	0.4800E-03	0.3600E-03	22
22.000	218.6	0.4047E+02	0.5200E-03	0.3900E-03	23
23.000	219.6	0.3467E+02	0.5700E-03	0.3800E-03	24
24.000	220.6	0.2972E+02	0.6100E-03	0.3600E-03	25
25.000	221.6	0.2549E+02	0.6600E-03	0.3400E-03	26
30.000	226.5	0.1197E+02	0.5800E-03	0.2300E-03	27
35.000	236.5	0.5746E+01	0.1600E-03	0.1100E-03	28
40.000	253.0	0.2871E+01	0.6700E-04	0.4900E-04	29
45.000	264.2	0.1491E+01	0.5200E-04	0.1700E-04	30
50.000	270.6	0.7978E+00	0.1200E-04	0.4300E-05	31
70.000	219.7	0.5527E-01	0.1500E-06	0.8800E-07	32
100.000	210.0	0.3000E-05	0.1000E-08	0.4300E-10	33

Figure 18. Model Atmosphere - Formatted Observations.

Each data line consists of: Height, temperature, pressure, absolute humidity, and density. They are read with the format: (F7.3,1X,F5.1,3F11.4). Notice that the variables required by RAYTRA are in this type of file. For this reason, no processing is required when a model atmosphere is entered.

7.3.4 Interactive BLDATM - Description of Input. Along with several information questions, that will be explained in Section 7.2.7 (example execution), three input types are accepted by BLDATM.

First, KLOW input can be used. This file is explained in depth following Figure 17, and further information can be found in the program internal documentation.

Next, model atmospheres are accepted. Six of them are available: The 1976 Standard Atmosphere, arctic summer and winter, tropical atmosphere, and the mid-latitude summer and winter [9]. The 1976 Standard Atmosphere is shown in Figure 17. All model atmospheres follow the same format. Presently, all the atmospheres are on the USAFETAC-DX directory at BBNB in the following files

(1) 1976S.low;1 is the 1976 Standard Atmosphere,

(2) ARTSU.low;1 is the arctic summer atmosphere,

(3) ARTWI.low;1 is the arctic winter atmosphere,
(4) TROPI.low;1 is the tropical atmosphere,
(5) MIDSU.low;1 is the midlatitude summer atmosphere, and
(6) MIDWI.low;1 is the midlatitude winter atmosphere.

Finally, the user can enter his own observations at the terminal. If he opts to do so, the program asks a series of questions to determine the variables and the units of those variables that will be entered. At least three variables must be entered. First, the user can enter height or pressure. Height can be entered in feet, thousands of feet, meters, or kilometers. Pressure can be entered in millibars or inches of mercury. Second, temperature must be entered, and it can be entered in Celsius, Kelvin, or Fahrenheit. Finally, a moisture parameter must be entered. Five are available: dew-point temperature, dew-point depression, relative humidity, absolute humidity, or mixing ratio. If a dew point is entered, it must be in the same units as temperature. Relative humidity must be entered in percent, absolute humidity must be entered in grams per cubic meter, and mixing ratio must be entered nondimensionally. The user is stepped through the process of choosing the input he desires. First, the data levels are entered. Then, the header information, that is, station elevation, station pressure, latitude, longitude, and date-time are requested. Once again, the user is stepped through the input process.

7.3.5 Interactive BLDATM - Description of Processing. BLDATM has many processing routines that were explained in Section 7.2.1. The primary processing done by BLDATM is the accurate computation of absolute humidity. The methods used were discussed previously is this technical note.

Secondary processing is required when the user enters an observation at the terminal. In this case, either height or pressure, depending upon which parameter was not entered, must be computed. A more detailed description of the methods used by all processing routines can be found in the program internal documentation.

7.3.6 Interactive BLDATM - Description of Output. The primary responsibility of BLDATM is to produce an atmospheric data file to be used by RAYTRA. This file consists of a header line composed of station elevation (in km), station pressure (in mb), latitude and longitude (in degrees), the time in ZULU, the date of the observation, the number of levels in the observation, and a description of the input type. Following the header line is the observation itself, composed of height in kilometers, temperature in Kelvin, pressure in millibars, and absolute humidity in grams per cubic meter. All output to this RAYTRA file is written with unformatted write statements. An example of such output can be seen in Figure 19.

```
 2.130000E-01,   1310.000   ,   28.22000   ,   177.3700    , 1200, 1, 1, 77,
-2758307833B, -3082982668B, 2083136512, 14*17315143744,
 2.130000E-01,   294.4000   ,   1310.000   ,   14.34021    ,
 2.940000E-01,   293.6000   ,   1200.000   ,   13.67066    ,
 1.279000   ,   287.0000   ,   871.0000   ,   4.542330    ,
 1.480000   ,   285.2100   ,   852.0000   ,   8.145842    ,
 2.230000   ,   281.6000   ,   796.0000   ,   7.864828    ,
 2.360000   ,   280.6000   ,   765.0000   ,   2.662255    ,
 3.281000   ,   277.2000   ,   700.0000   ,   6.264725    ,
 3.889000   ,   272.9000   ,   634.0000   ,   4.673555    ,
 4.418000   ,   266.7000   ,   593.0000   ,   0.2148658    ,
 5.727000   ,   265.9000   ,   570.0000   ,   0.1486181    ,
 5.730000   ,   259.7000   ,   509.0000   ,   0.1055793    ,
 6.749000   ,   254.1000   ,   437.0000   ,   0.5751583E-01,
 7.219000   ,   249.5000   ,   410.0000   ,   0.2490528    ,
 7.590000   ,   251.5000   ,   400.0000   ,   0.4283303E-01,
 7.797000   ,   250.3000   ,   374.0000   ,   0.3727808E-01,
 8.754000   ,   245.5000   ,   332.0000   ,   0.1636339E-01,
 9.375000   ,   238.1000   ,   304.0000   ,   0.8116370E-02,
 9.450000   ,   238.3000   ,   300.0000   ,   0.8336564E-02,
 9.847000   ,   233.7000   ,   284.0000   ,   0.4430490E-02,
 10.700000  ,   228.3000   ,   250.0000   ,   0.1789451E-02,
 11.426000  ,   223.1000   ,   225.0000   ,   0.1237807E-02,
 12.160000  ,   219.3000   ,   200.0000   ,   0.1087882E-02,
 2.130000E-01,   1317.000   ,   28.22000   ,   177.3700    , 1200, 27, 1, 77,
-2758307833B, -3082982668B, 2083136512, 14*17315143744,
 2.130000E-01,   288.2000   ,   1317.000   ,   6.554807    ,
 1.152000   ,   287.2000   ,   1200.000   ,   5.713939    ,
 1.197000   ,   277.8000   ,   882.0000   ,   3.991411    ,
 1.491000   ,   274.2000   ,   650.0000   ,   3.082245    ,
 2.392000   ,   271.9000   ,   760.0000   ,   0.3527868    ,
 3.242000   ,   272.7000   ,   730.0000   ,   0.3798925    ,
 3.268000   ,   272.1300   ,   681.0000   ,   0.3593976    ,
 3.735000   ,   268.7000   ,   642.0000   ,   0.2608146    ,
 3.997000   ,   264.7000   ,   621.0000   ,   0.2608146    ,
 5.660000   ,   256.7000   ,   522.0000   ,   0.7660340E-01,
 6.160000   ,   254.7000   ,   468.0000   ,   0.6149166E-01,
 7.320000   ,   244.5000   ,   400.0000   ,   0.1854396E-01,
 8.370000   ,   235.5000   ,   347.0000   ,   0.5697537E-02,
 9.290000   ,   227.1000   ,   300.0000   ,   0.1301892E-02,
 10.470000  ,   218.9000   ,   252.0000   ,   0.5682988E-03,
 11.342000  ,   223.9000   ,   214.0000   ,   0.1747170E-02,
 11.670000  ,   221.3000   ,   238.0000   ,   0.1466513E-02,
 11.920000  ,   222.1300   ,   222.0000   ,   0.1656667E-02,
 12.198000  ,   222.1300   ,   195.0000   ,   0.1771834E-02,
 13.760000  ,   212.3000   ,   150.0000   ,   0.7384083E-03,
 14.560000  ,   211.3000   ,   132.0000   ,   0.6529999E-03,
 14.996000  ,   209.5000   ,   123.0000   ,   0.6136206E-03,
 15.240000  ,   204.9000   ,   100.0000   ,   0.5100783E-03,
```

Figure 19a.

```
0.1300000E-01,   1018.000   ,   28.22000   ,   177.3700   , 1200, 28, 1, 77
-27583078336, -3482962668, 2483133651 2, 14*1731514374 4,
0.1300000E-01,   289.2000   ,   1018.000   ,   11.43756   ,
0.1600000   ,   289.2000   ,   1000.000   ,   8.033175   ,
1.300000   ,   276.4000   ,   872.0000   ,   6.552334   ,
1.412000   ,   274.0000   ,   461.0000   ,   2.752000   ,
1.512000   ,   281.0000   ,   850.0000   ,   2.354128   ,
1.822000   ,   279.2000   ,   619.0000   ,   2.046498   ,
2.623000   ,   274.4000   ,   742.0000   ,   0.4437433   ,
3.089000   ,   276.6000   ,   700.0000   ,   0.5541579   ,
4.423000   ,   271.3000   ,   593.0000   ,   0.3037931   ,
5.155000   ,   263.5000   ,   500.0000   ,   0.7386283   ,
5.740000   ,   259.3000   ,   500.0000   ,   1.311933   ,
6.846000   ,   255.1000   ,   432.0000   ,   1.183570   ,
7.420000   ,   251.9000   ,   400.0000   ,   0.9152889   ,
9.470000   ,   236.1000   ,   330.0000   ,   0.1395759   ,
10.730000   ,   224.9000   ,   250.0000   ,   0.2009818E-01,
11.592000   ,   217.7000   ,   218.0000   ,   0.6565200E-02,
12.130000   ,   214.5000   ,   200.0000   ,   0.3756745E-02,
13.558000   ,   208.3000   ,   159.0000   ,   0.1093021E-02,
13.910000   ,   206.5000   ,   150.0000   ,   0.7591892E-03,
14.703000   ,   205.3000   ,   147.0000   ,   0.7483542E-03,
2.000000E+00,   1013.000   ,   45.00000   ,   90.00000   , 1200, 1, 1, 80,
1753476632, -2655018352, -3204758855 4, -2704632628 8, -2977265939 2, 12*1731514
2.000000E+00,   280.1000   ,   1013.000   ,   5.990000   ,
1.000000   ,   281.6000   ,   898.6000   ,   4.270000   ,
2.000000   ,   275.1000   ,   795.0000   ,   2.900000   ,
3.000000   ,   268.7000   ,   731.2000   ,   1.600000   ,
4.000000   ,   262.2000   ,   616.6000   ,   1.100000   ,
5.000000   ,   255.7000   ,   540.5000   ,   0.6400000   ,
6.000000   ,   249.2000   ,   472.2000   ,   0.3800000   ,
7.000000   ,   242.7000   ,   411.1000   ,   0.2100000   ,
8.000000   ,   236.2000   ,   356.5000   ,   0.1200000   ,
9.000000   ,   229.7000   ,   308.0000   ,   0.4600000E-01,
10.00000   ,   223.2000   ,   265.0000   ,   0.1800000E-01,
11.00000   ,   216.6000   ,   227.0000   ,   0.8200000E-02,
12.00000   ,   216.6000   ,   194.0000   ,   0.3700000E-02,
13.00000   ,   216.6000   ,   165.6000   ,   0.1800000E-02,
14.00000   ,   216.6000   ,   141.1000   ,   0.8400000E-03,
15.00000   ,   216.6000   ,   121.1000   ,   0.7200000E-03,
16.00000   ,   216.6000   ,   103.5000   ,   0.6100000E-03,
17.00000   ,   216.6000   ,   88.50000   ,   0.5200000E-03,
18.00000   ,   216.6000   ,   75.65000   ,   0.4400000E-03,
19.00000   ,   216.6000   ,   64.67000   ,   0.4400000E-03,
20.00000   ,   216.6000   ,   55.29000   ,   0.4400000E-03,
21.00000   ,   217.6000   ,   47.29000   ,   0.4800000E-03,
22.00000   ,   218.6000   ,   40.47000   ,   0.5200000E-03,
23.00000   ,   219.6000   ,   34.67000   ,   0.5700000E-03,
24.00000   ,   220.6000   ,   29.72000   ,   0.6100000E-03,
25.00000   ,   221.6000   ,   25.49000   ,   0.6600000E-03,
30.00000   ,   226.5000   ,   11.97000   ,   0.3800000E-03,
35.00000   ,   236.5000   ,   5.746000   ,   0.1600000E-03,
40.00000   ,   253.4000   ,   2.871000   ,   0.6700000E-04,
45.00000   ,   254.2000   ,   1.491000   ,   0.3200000E-04,
50.00000   ,   271.5000   ,   0.7976000   ,   0.1200000E-04,
70.00000   ,   219.7000   ,   0.5520000E-01,   0.1500000E-06,
100.0000   ,   21 .4000   ,   0.3600000E-03,   0.1000000E-08,
```

Figure 19b.

0.1332040E-01,	1313.200	, 122.2000	, -37.90000	, 1200, 20, 11, 53,	
0.1300000E-01,	299.2000	, 1313.200	, 20.19313	,	
0.5773270	, 293.9000	, 950.0000	, 12.77291	,	
1.041013	, 298.0000	, 900.0000	, 7.782663	,	
2.014796	, 274.0000	, 850.0000	, 2.892722	,	
2.331157	, 271.5000	, 750.0000	, 0.8482658	,	
3.267144	, 259.0000	, 700.0000	, 0.1701065	,	
4.202309	, 243.8000	, 600.0000	, 0.4718971E-01,		
5.481043	, 235.1000	, 500.0000	, 0.2068933E-01,		
7.488473	, 225.0000	, 350.0000	, 0.3471279E-02,		
10.11074	, 216.0000	, 250.0000	, 0.1316617E-02,		
11.55928	, 215.1000	, 200.0000	, 0.8972026E-03,		
13.38376	, 213.5000	, 150.0000	, 0.7349863E-03,		
15.92760	, 212.0000	, 100.0000	, 0.4920671E-03,		

Figure 19c.

Figure 19. Example of Output from Interactive BLDATM.

Also, a hard copy, human readable, output file can be written if the user requests it. He can receive a hard copy file of all the observations after they are processed, a hard copy of only the observations that are discarded during processing, or he can choose not to receive a hard copy at all.

If an observation is discarded for any reason, it will not be written to the raytrace-formatted output file. For this reason, it is suggested that the user opt to receive at least a human readable ouput of the discarded observation.

7.3.7 Interactive BLDATM - Program Execution. The next figure, Figure 20, is an example of a typical BLDATM execution. It is lettered at various points and is discussed in detail following the figure.

The following is explanation of the example execution.

(a) To begin execution of the program, enter the program name after the exec prompt '@'.

(b) This is BLDATM header information.

(c) The user can receive status reports as the observation is processed. Note here that the confirmation is required for all input. An 'N' denoted negative confirmation, and any other character denotes positive confirmation (a carriage return was used).

(d) The user can receive hard copy of all observations. In this case, it was not requested.

(e) If hard copy of all is not requested, a hard copy of the discarded observation can be received.

```
(A)  @BLDATM.SAV:1

(B)          <ETAC-DX>BLDATM - VERSION 15 - ON 19-OCT-81  AT 16:29 EST.

(C)  DO YOU WANT STATUS REPORTS AT VARIOUS POINTS AS THE
     OBS IS BEING PROCESSED (Y OR N) ?
     BLD>Y
     [CONFIRM]<CR>

(D)  DO YOU WANT A HARD COPY OUTPUT OF ALL OBS AS THEY ARE PROCESSED (Y OR N)?
     BLD>N
     [CONFIRM]<CR>

(E)  THEN DO YOU WANT A HARD COPY OUTPUT OF THE OBS THAT
     ARE DISCARDED (Y OR N)?
     BLD>Y
     [CONFIRM]<CR>

(F)  DISK 22 OPENED FOR HARD COPY OUTPUT TO BLDATM.HRD.

     DISK 23 OPENED FOR RATMIN OUTPUT TO RAYTRA.ATM.

(G)  ENTER INPUT TYPE DESIRED AS
     (1=INTERACTIVE, 2=KLDW, 3=PT.ANALYSIS, OR 4=MODEL).
     BLD>2
     [CONFIRM]<CR>

(H)  ENTER INPUT FILE.EXT (MAX 10 CHAR).
     BLD>KLDW.JAN
     [CONFIRM]<CR>

(I)  DISK 21 OPENED FOR INPUT FROM KLDW.JAN  .

(J)  ARE ALL OBS TO BE PROCESSED (Y OR N)?
     BLD>N
     [CONFIRM]<CR>

(K)  ENTER OBS REQUESTED SEQUENTIALLY (IE. 1,2,5,19-25,28,33-35,ETC).
     SEQUENTIAL OBS SELECTION - - LINE #  1.
(L)  BLD>2,8,53-55
     [CONFIRM]<CR>
(M)  IS YOUR SEQUENTIAL OBS SELECTION COMPLETE (Y OR N)?
     BLD>Y
     [CONFIRM]<CR>

(N)  READING OBS #  2 FROM KLDW.JAN  .
     RATMIN OUTPUT OBS #  2 TO RAYTRA.ATM.

     READING OBS #  8 FROM KLDW.JAN  .
(O)       MISSING DATA IN OBS #  8 FROM KLDW.JAN   CANNOT BE RECOVERED.
          MISSING HEIGHT LEVELS: 18.
          PROCESSING INCOMPLETE.
     HARD-COPY OUTPUT OBS #  8 TO BLDATM.HRD.
```

Figure 20a.

```
     READING OBS # 53 FROM KLOW.JAN  .
     RATMIN OUTPUT OBS # 53 TO RAYTRA.ATM.

     READING OBS # 54 FROM KLOW.JAN  .
         NO PRESSURE > 152 MB IN OBS # 54.
         UNABLE TO PROCESS.
     HARD-COPY OUTPUT OBS # 54 TO RLDATM.HRD.

     READING OBS # 55 FROM KLOW.JAN  .
     RATMIN OUTPUT OBS # 55 TO RAYTRA.ATM.

(P)  PROCESSING OF KLOW.JAN   COMPLETE.

(Q)  INPUT FILE KLOW.JAN   ON DISK 21 CLOSED.

(R)  OBS DISCARDED FROM KLOW.JAN  :  2 OF  5 REQUESTED.
     DISCARDED OB NUMBERS:
       # 54

(S)  DO YOU WISH TO CONTINUE WITH ANOTHER INPUT TYPE (Y OR N)?
     BLD>Y
     [CONFIRM]<CR>

(T)  ENTER INPUT TYPE DESIRED AS
     (1=INTERACTIVE, 2=KLOW, 3=PT.ANALYSIS, OR 4=MODEL).
     BLD>4
     [CONFIRM]<CR>

(U)  ENTER INPUT FILE.EXT (MAX 10 CHAR).
     BLD>1962S.LOW
(V)  [CONFIRM]N

(W)  ENTER INPUT FILE.EXT (MAX 10 CHAR).
     BLD>1962S.LOW
     [CONFIRM]<CR>

     DISK 21 OPENED FOR INPUT FROM 1962S.LOW  .

     READING MODEL IDENTIFIED AS:  1962 U. S. STANDARD ATMOSPHERE
         FROM 1962S.LOW  .
     RATMIN OUTPUT OBS #  1 TO RAYTRA.ATM.

     INPUT FILE 1962S.LOW   ON DISK 21 CLOSED.

     OBS DISCARDED FROM 1962.LOW  :  0 OF  1 REQUESTED.

(X)  DO YOU WISH TO CONTINUE WITH ANOTHER INPUT TYPE (Y OR N)?
     BLD>Y
     [CONFIRM]<CR>

     ENTER INPUT TYPE DESIRED AS
     (1=INTERACTIVE, 2=KLOW, 3=PT.ANALYSIS, OR 4=MODEL).
     BLD>1
     [CONFIRM]<CR>
```

Figure 20b.

```
     INTERACTIVE MODE FOR BLDATM.

     HOW MANY OBS WILL YOU ENTER (MAX 9) ?
     BLD>1
     [CONFIRM]<CR>

(Y)  WILL YOU ENTER 1=HEIGHT OR 2=PRESSURE ?
     BLD>2
     [CONFIRM]<CR>

(Z)  WILL UNITS BE 1=MB OR 2=IN OF HG ?
     BLD>1
     [CONFIRM]<CR>

(AA) WILL TEMPERATURE BE IN 1=C, 2=K, OR 3=F ?
     BLD>1
     [CONFIRM]<CR>

(AB) WILL YOU ENTER 1=DPT TEMP, 2=DPT DEP, 3=REL HUM,
     4=ABS HUM, OR 5=MIX RATIO ?
     BLD>3
     [CONFIRM]<CR>

(AC) RELATIVE HUMIDITY MUST BE IN PERCENT.

(AD)                    ***** NOTE *****
     PARAMETERS MUST BE ENTERED IN THE ORDER THAT THE HEADER
       LINE INDICATES AND MUST BE SEPARATED BY A COMMA.
     ALL PARAMETERS MUST BE ENTERED WITH THE EXCEPTION OF THE
       MOISTURE PARAMETERS. THE MOISTURE PARAMETERS ABOVE THE
       -40 DEGREE CELCIUS LEVEL CAN BE OMITTED AND THIS
       OMISSION MUST BE INDICATED BY ENTERING A -1.0.
     ALL PARAMETERS MUST BE ENTERED IN REAL (F) FORMAT.

(AE) ENTER ^Z AS FIRST CHARACTER WHEN DONE.

       LEVEL          PRESSURE     TEMPERATURE     REL HUM
                        (MB)          (C)            (%)
(AF)   1 BLD>1013.2,26.6,83.0
       2 BLD>950.0,24.7,71.0
       3 BLD>900.0,15.2,60.0
       4 BLD>800.0,1.2,55.0
       5 BLD>750.0,-1.9,20.0
       6 BLD>700.0,-14.2,10.0
       7 BLD>600.0,-29.4,10.0
       8 BLD>500.0,-38.1,10.0
       9 BLD>350.0,-48.0,10.0
      10 BLD>250.0,-55.2,10.0
      11 BLD>200.0,-58.1,-1.0
      12 BLD>150.0,-59.9,-1.0
      13 BLD>100.0,-60.8,-1.0
      14 BLD>^Z
```

Figure 20c.

```
      13 LEVELS WERE DECODED.

(AG) ENTER STAELE(KM)/F,STAPRS(MB)/F,TIME2/I,DAY/I,MONTH/I,YEAR/I,STALAT/F,STALON/F
     BLD>,213,1013.2,1200,24,11,53,122.2,-37.9
     [CONFIRM]<CR>

     RATMIN OUTPUT OBS #  1 TO RAYTRA.ATM.

     OBS DISCARDED FROM TERMINAL INPUT:  0 OF  1 REQUESTED.

(AH) DO YOU WISH TO CONTINUE WITH ANOTHER INPUT TYPE (Y OR N)?
     BLD>N
     [CONFIRM]<CR>

(AI) TOTAL OBS DISCARDED:   2 OF    7 REQUESTED.

(AJ) HARD COPY OUTPUT FILE BLDATM.HRD ON DISK 22 CLOSED.

     RATMIN OUTPUT FILE RAYTRA.ATM ON DISK 23 CLOSE.

(AK) END OF EXECUTION
     CPU TIME: 17.95 ELAPSED TIME: 6:40.56
     EXIT
     ^C
     $
```

Figure 20d.

Figure 20. Example Execution of Interactive BLDATM.

(f) The next two statements verify that the output files have been opened. The output files are program prechosen with the names that appear.

(g) The input type is chosen next. In this case, KLOW input was selected.

(h) The input file name is variable and must be supplied by the user.

(i) This statement verifies that the input file was found and opened.

(j) If KLOW input is selected, the user must decide whether all observations in the file are to be processed or selected observations are to be processed. In this case, all observations were not processed.

(k) When selected observations are to be processed, the user must specify which observations are requested. Note the selection must be sequential.

(l) In this case, observations 2,8,53,54,55 were selected for processing.

(m) Only one line was required to enter the observation selection, so the observation selection is complete. Should another line be required, enter an 'N' here.

(n) These statements are examples of status reports.

(o) When an observation is discarded, the reason is always given. Note that the discarded observations are written only to the hard copy file, as requested. Also note that the good observations are not written to the hard copy file. Instead, they are written to the raytrace output file.

(p) When the input file is exhausted, the user is informed.

(q) The input file is closed when it is exhausted.

(r) An account of the discarded observation is given as well as the number of the observation.

(s) The user can select another input type.

(t) This time the user has selected model input.

(u) Once again, the input file must be specified.

(v) Notice in this case, the wrong input file was specified. The user negated the entry with negative confirmation.

(w) The input file was requested once again.

(x) After the model is read, the user can select another input type.

(y) Since the user selected input from the terminal, he must now select the variables and units he will enter.

(z) Above, pressure was chosen. Here, millibar units were chosen.

(aa) Temperature will be entered in Celsius.

(ab) Relative humidity will be entered.

(ac) Relative humidity must be in percent.

(ad) This is an explanation to the user as to how the observation must be entered.

(ae) After the final data line is entered, a control Z must be entered as the first character of the next line.

(af) The data is entered as shown.

(ag) The header information is entered last.

(ah) Once again, the user can continue. In this case, he has no more input, and the program ends.

(ai) A total of the discarded observations is given.

(aj) The hard copy and raytrace-formatted output files are closed. The user can immediately see this output by using the exec "copy" command. To get a printed copy of the output, the local "FTP" (file transfer) can be used. Also, the files should be deleted when no longer needed.

(ak) A system account of CPU and wall time is given and control is returned to the exec.

The following is an example of the raytrace-formatted output file. It is written entirely with unformatted write statements. More observations, in this example, will be written to this file than to the hard copy output file since only two observations of seven were discarded.

Note that all observations, except the two that were discarded, were written to this raytrace-formatted output file. The two discarded observations cannot be used by raytrace; however, they were written to the hard copy output file as requested by the user.

The following (Figure 21) is an example of the hard copy output.

Note that the two discarded observations are written to this file. Both have missing height levels. The first observation, as explained in the status reports, was discarded for this reason. The second observation, however, was discarded because there was no pressure level greater than or equal to 150 mb. It was discarded before the height check was made.

7.4 Batch BLDCOM - General.

The batch BLDCOM and the interactive BLDCOM differ only slightly. Therefore, this section will concentrated on the differences. The primary responsibility of BLDCOM is still to create the command file for RAYTRA.

7.4.1 Batch BLDCOM - Structure. This version of BLDCOM consists of the main program and one system subroutine (Figure 22). The subroutine VMLINE writes the USAFETAC-required header on the output.

7.4.2 Batch BLDCOM - Performance. The performance of the batch BLDCOM is the same as that of the interactive BLDCOM.

7.4.3 Batch BLDCOM - Data Base Requirements. No data base is required since all input is made at the card reader.

BLDATM.FOR - - VERSION 13
UNITED STATES AIR FORCE ENVIRONMENTAL TECHNICAL APPLICATIONS CENTER
AEROSPACE SCIENCES BRANCH (USAFETAC/DNE)
SCOTT AIR FORCE BASE, ILLINOIS 62225
HARD COPY OUTPUT OF ATMOSPHERIC DATA USED AS INPUT TO RAYTRACE
BLDATM.HRD PREPARED 19-OCT-81 AT 17:43 EASTERN TIME.
OBS # 8 PRODUCED FROM KLOW FILE : KLOW.JAN PAGE 1.
BLOCK STATION NUMBER : 910660
DATE-TIME : 4-JAN-77 AT 1200 ZULU
STA ELEVATION : 13.00 M
STA PRESSURE : 1011.00 MB
STA LATITUDE : 28.22 DEG NORTH
STA LONGITUDE : 177.37 DEG WEST
30 LEVELS REPORTED.

LEVEL	HEIGHT (KM)	PRESSURE (MB)	TEMP (K)	DPT DEP (K)	ABS HUMID (G/M**3)	REL HUM (%)
1	0.013	1011.00	291.00	6.00	1.030E+01	-1.00
2	0.101	1000.00	290.40	6.00	9.920E+00	-1.00
3	-1.000	900.00	282.80	0.20	9.032E+00	-1.00
4	-1.000	884.00	282.00	9.00	4.623E+00	-1.00
5	-1.000	873.00	282.60	30.00	9.065E-01	-1.00
6	1.481	850.00	281.60	30.00	8.333E-01	-1.00
7	-1.000	798.00	277.80	30.00	6.008E-01	-1.00
8	-1.000	727.00	275.80	8.00	3.208E+00	-1.00
9	-1.000	720.00	279.20	30.00	6.787E-01	-1.00
10	3.075	700.00	279.20	30.00	6.787E-01	-1.00
11	-1.000	583.00	268.50	30.00	2.559E-01	-1.00
12	-1.000	568.00	267.70	7.00	1.891E+00	-1.00
13	-1.000	543.00	268.10	30.00	2.462E-01	-1.00
14	5.720	500.00	262.50	30.00	1.412E-01	-1.00
15	-1.000	469.00	257.70	5.00	1.003E+00	-1.00
16	-1.000	447.00	256.30	0.00	1.373E+00	-1.00
17	7.390	400.00	248.10	0.10	6.851E-01	-1.00
18	-1.000	382.00	248.70	30.00	3.089E-02	-1.00
19	-1.000	322.00	244.30	30.00	1.889E-02	-1.00
20	9.460	300.00	241.30	-1.00	4.132E-01	-1.00
21	-1.000	270.00	235.30	30.00	5.542E-03	-1.00
22	10.720	250.00	231.70	10.63	9.447E-03	-1.00
23	12.200	200.00	220.10	17.06	2.328E-03	-1.00
24	-1.000	196.00	218.50	30.00	2.147E-04	-1.00
25	-1.000	187.00	218.30	30.00	2.074E-04	-1.00
26	-1.000	167.00	210.90	30.00	5.434E-05	-1.00
27	14.014	150.00	210.70	15.14	7.441E-04	-1.00
28	16.430	100.00	196.10	2.97	5.330E-04	-1.00
29	-1.000	82.00	196.10	4.14	4.370E-04	-1.00
30	18.478	70.00	196.10	5.06	3.731E-04	-1.00

****
***** DISCARDED OBS *****
****

Figure 21a.

OBS # 50 PRODUCED FROM KLOW FILE : KLOW.JAN PAGE 2.

GLOBAL STATION NUMBER : 91066?
DATE-TIME : 28-JAN-77 AT 2 ZULU
STA ELEVATION : 13.00 M
STA PRESSURE : 74.00 MB
STA LATITUDE : 28.22 DEG NORTH
STA LONGITUDE : 177.37 DEG WEST

7 LEVELS REPORTED.

LEVEL	HEIGHT (KM)	PRESSURE (MB)	TEMP (K)	DPT DEP (K)	ABS HUMID (G/M**3)	REL HUM (%)
1	-1.000	74.00	203.70	12.34	3.797E-04	-1.00
2	-1.000	70.00	207.70	16.66	3.522E-04	-1.00
3	-1.000	61.00	210.70	20.45	3.026E-04	-1.00
4	-1.000	50.00	209.70	20.59	2.492E-04	-1.00
5	-1.000	30.00	216.50	30.24	1.448E-04	-1.00
6	-1.000	20.00	221.10	37.03	9.454E-05	-1.00
7	-1.000	16.50	221.30	38.26	7.793E-05	-1.00

****
***** DISCARDED OBS *****
****

Figure 21b.

Figure 21. Example of BLDATM Hard Copy Output.

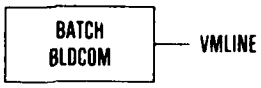

Figure 22. Structure of Batch BLDCOM.

7.4.4 Batch BLDCOM - Description of Input. The input parameters in this version of BLDCOM are the same as those in the interactive version of BLDCOM. For this reason, a description of the parameters will not be repeated here. The difference is that in this batch version the input is all entered at the card reader.

The following is a description of how the input parameters are entered at the reader. A minimum of five cards is required.

Card #1: The label card.
This card is the ASCII label. All 80 columns are available as a description of the raytrace project. Card #1 is read in the format (20A4).

Card #2: The program-control card.
Column 1: ITYPE,
Column 2: LEN,
Column 3: IPRNT, and
Column 4: IOUT.
Once again, for nearly all purposes, 2031 is the suggested input for this card. It is read in the format (4I1).

Card #3: The geometry data card.
Columns 01-10: H1,
Columns 11-20: H2,
Columns 21-30: ANGLE,
Columns 31-40: RANGE,
Columns 41-50: BETA,
Columns 51-60: H3, and
Columns 61-70: DH.
This card is read in the format (4F10.3).
Use a -1.0 for variables not used.

Card #4: The frequency data card.
Columns 1-12: V1.
Card #4 is read in the format (F12.3).

Card #5: The recycle card.
Column 1: To enter another set of cards #2, 3, and 4, enter a 'Y'. To end program execution, enter a 'N'.
This card is read in the format (A1).

The following is an example of a BLDCOM input sequence with two sets of records. In this example, the suggested card #2 input (2031) is used in both sets. This causes a normal path trace between two points in the atmosphere (ITYPE = 2), the shorter path to be used (LEN = 0), a print out of the atmospheric data and the level results (IPRNT = 3), and a hard copy output file to be created (IOUT = 1). The geometry card is also the same for both cases: H1 = 0.0 km, H2 = 45.0 km, and ANGLE = 60.0 degrees. Note that the other parameters are all missing and are set to -1.0 as required. The frequency control card is different for each case. First a raytrace will be performed for V1 = 1.0 CM**-1, then one will be performed for V1 = 10.0 CM**-1.

```
Card Column:
00000000011111111112222222222333333333344444444445555555555 ...
12345678901234567890123456789012345678901234567890123456789 ...
Raytrace Label Card - Test Run.
2031
0.0       45.0    60.0    -1.0      (-1.0 for rest)
1.0
Y
2031
0.0       45.0    60.0    -1.0      -1.0        -1.0 ...
10.0
N
```

Note that the label record, Card #1 is entered only once. For a full description of the parameters, see Section 7.2.4.

7.4.5 Batch BLDCOM - Description of Processing. As with the interactive BLDCOM, no processing is necessary. The input is simply read and written in binary to an output tape.

7.4.6 Batch BLDCOM - Description of Output. The output of the batch version of BLDCOM is a binary tape that will be used as input for RAYTRA. Since the output is binary, an example of it cannot be given. Suffice it to say that is is used as input to RAYTRA.

7.4.7 Batch BLDCOM - Program Execution. The execution of the batch BLDCOM is the same as that of the interactive BLDCOM. The information written to the printer is informational and an example of the execution is not needed.

7.5 Batch BLDATM - General

The batch version of BLDATM is very similar to the interactive version. The main difference is that input is originated at the card reader and is controlled at the card reader rather than at a terminal. For this reason, only the differences will be discussed in this section of the technical note.

7.5.1 Batch BLDATM - Structure. This version of BLDATM is composed of the main program, one system subroutine, and 21 user subroutines. The documentation for the main program as described in Section 7.2.1 applies in this version as well (Figure 23). The system subroutine, VMLINE, writes the USAFETAC-required headers on the output. The user subroutines are the same, but seven of them are not used (FILGMT, GETANS, GETCON, GETFIL, GETVAL, SETFLG, and TRIMER).

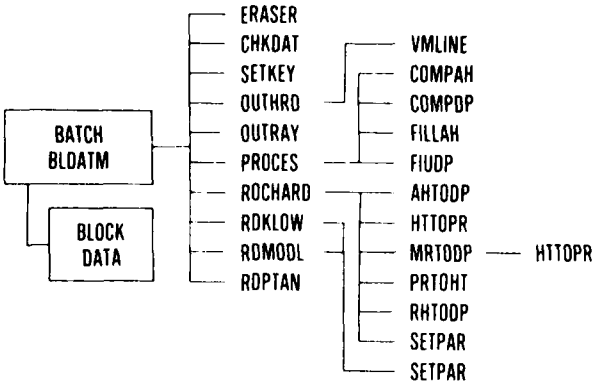

Figure 23. Structure of Batch BLDATM.

7.5.2 Batch BLDATM - Performance. The performance of this version of BLDATM is the same as the interactive version.

7.5.3 Batch BLDATM - Data Base Requirements. Data base requirements for this version are the same as the requirements for the interactive version. The formats for the KLOW and the model files are the same. The only difference is that the user provided input is entered at the card reader, and is formatted, rather than being entered at the terminal. This point will be expanded in the next section.

If KLOW or model input is requested, the user must insure that a tape with the desired input is available prior to execution (see USAFETAC/DNE for tape file numbers).

7.5.4 Batch BLDATM - Description of Input. Input for BLDATM is originated at the card reader. In addition to the card reader, a maximum of two tapes can be used as input. One tape with KLOW-formatted files and one tape with model atmosphere(s). These input tapes can be selected, but are not required, since the user can enter an observation at the card reader. Following is a discussion of the options available to the user.

Card #1: This card is required. It contains two variables: Status and HRDCOP. Status is entered in column 1 as 'Y' or 'N'. If an 'N' is entered in column 1, no status reports will be given. If a 'Y' is entered, status reports will be provided at various points throughout the program. An example of these status reports is

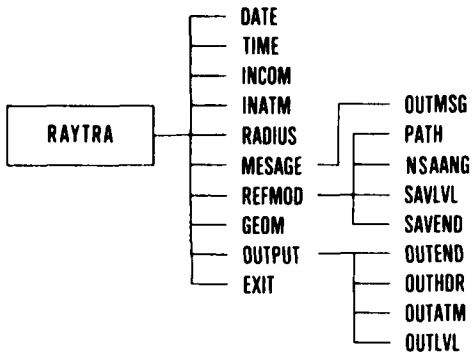

Figure 24. Structure of RAYTRA.

provided in the technical note following Figure 24. HRDCOP is entered in column 2 as 'Y', 'B', or 'N'. If a 'Y' is entered, a hard copy output is written to the printer after each observation is processed. If a 'B' is entered, a hard copy is written to the printer of every discarded observation. If an 'N' is entered, no hard copy is printed. This card is entered only once at the start of the program.
Card #1 is read with a format of (2A1).

Card #2: This card is required to identify intype, the input type to be processed. It is entered in the first column as
1 = Card input,
2 = KLOW input,
3 = Point analysis input, or
4 = Model atmosphere input.
Card # 2 is read with the format (I1).

The following cards are dependent upon the input type selected.

If card input is selected, the following is the sequence of cards that follow Card #2.

Card #A3: This card contains five variables; DTFLAG, DUFLAG, TUFLAG, MTFLAG, and MUFLAG.

DTFLAG is entered in column 1 as:
1 = Height to be entered, or
2 = Pressure to be entered.

DUFLAG is entered in column 2 as:
1 = Height entered in thousands of feet,
2 = Height entered in feet,
3 = Height entered in kilometers,
4 = Height entered in meters,

5 = Pressure entered in millibars, or
6 = Pressure entered in inches of mercury.

TUFLAG is entered in column 3 as:
1 = Temperature entered in Celsius,
2 = Temperature entered in Kelvin, or
3 = Temperature entered in Fahrenheit.

MTFLAG is entered in column 4 as:
1 = Dew-point temperature entered,
2 = Dew-point depression entered,
3 = Relative humidity entered,
4 = Absolute humidity entered,
5 = Mixing ratio entered.

MUFLAG is entered is column 5 as:
1 = Dew-point depression or temperature in Celsius,
2 = Dew points in Kelvin, or
3 = Dew points in Fahrenheit.

Card #A3 is read in the format (5I1).

Note at this point, three variables will be read at the reader: Either height or pressure, temperature, and a moisture parameter. If dew-point temperature or depression is entered, it must be in the same units as temperature.

Card #A4: This card contains 9 variables: STAELE, STAPRS, STALAT, STALON, DAY, MONTH, YEAR, TIMEZ, and LEVELS.

STAELE is the station elevation in kilometers. It is entered in columns 1-10 in real format, the decimal included.

STAPRS is the station pressure in millibars. It is entered in columns 11-20 in real format, the decimal included.

STALAT is the station latitude in degrees. It is entered in columns 21-30 in real format, decimal included. A positive number should be entered for north and a negative number for south.

STALON is the station longitude in degrees. It is entered in columns 31-40 in real format, decimal included. A positive number should be entered for west and a negative number for east.

DAY is the day of the observation, an integer. It is entered in columns 41-42.

MONTH is the month of the observation, an integer. It is entered in columns 43-44.

YEAR is the year of the observation, an integer. It is entered in columns 45-46.

TIMEZ is the time of the observation in ZULU. It is entered in columns 47-50.

LEVELS is the number of data levels that will be entered at the reader, an integer. It is entered in columns 51-52.

Card #A4 is read with the format (4F1.3,3I2,I4,I2).

Card #A5 through card #AN is the data cards, one for every level to be entered, up to the value of levels. Each card will contain the three variables described in card #A3. All variables are real, and they are read with the format (3F10.3), so the height or pressure must be entered in columns 1-10; temperature must be entered in columns 11-20; and the moisture must be entered in columns 21-30.

If KLOW input (INTYPE = 2 in card #2) is selected, the sequence of cards required is

Card #B3: This card contains the number of observations that will be read from the KLOW file. If all of the observations are requested, A -1 should be entered. If a specific number of observations is requested, enter that number.

If all observations are requested, no further cards are required here; however, if specific observations are requested, the numbers of the requested observations should be entered on the following card(s).

Card #B4: This card contains the numbers of the requested observations to read from the KLOW file. It is read in the format (100I2) from 1 to the number of observations requested (entered in the preceeding card). For example, if 05 observations are requested, 05 should be entered in columns 1-2 of card #B3. Then, card #B4 would be: 0108152345. Notice in this case, observations #1,8,15, 23,45 from the KLOW file will be read. Also notice that they are entered sequentially. Note that more than one card #B4 may be required.

If input from a model atmosphere (INTYPE = 4) is requested, no other cards are necessary. Presently, point analysis input (INTYPE = 3) is not implemented.)

After these cards have been entered, the final cycle card is required. It consists of one variable, CONTNU, and it should be entered in column 1. If a 'Y' is entered, a new input type is required, and card #2, as well as the appropiate subsequent cards, must be entered. If an 'N' is entered, the program ends.

The following is an example of a batch BLDATM runstream. It is lettered at various points and explained in depth following the example.

```
    Card Column:
    00000000011111111112222222222333333333344444444445555555555
    12345678901234567890123456789012345678901234567890123456789
(a) YY
(b) 2
(c) 05
(d) 0103050754
(e) Y
(f) 4
(g) Y
(h) 1
(i) 25222
(j) .013       1013.0      28.22   177.37      010177000029
(k) 1013.0      292.0       4.5
    1000.0      291.2       6.0
    956.0       288.6       6.0
    921.0       286.6       0.6
    850.0       284.2       0.7
    774.0       281.2       4.2
    765.0       280.0       6.0
    737.0       279.6       7.0
    700.0       276.8       6.0
    628.0       269.7       1.1
    554.0       266.7       30.0
    507.0       261.3       30.0
    500.0       261.3       30.0
    471.0       259.7       30.0
    464.0       258.1       30.0
    449.0       257.5       30.0
    414.0       251.7       30.0
    400.0       250.5       30.0
    382.0       249.7       30.0
    358.0       246.1       30.0
    340.0       242.9       30.0
    300.0       237.3       30.0
    289.9       234.7       30.0
    284.0       235.1       29.59
    250.0       230.5       26.69
```

```
    202.0      219.5      21.87
    200.0      219.3      21.73
    173.0      214.9      18.53
    150.0      211.1      15.54
(l) N
```

The following is an explanation of the above runstream.

(a) In this case the user has requested status reports as the observation is being processed, and he has requested a hard copy output of all observation after they are processed.

(b) The user has selected KLOW input.

(c) Five observations in the KLOW file are to be processed.

(d) The numbers of the requested observations are: #1,3,5,7,54.

(e) The user will request another input type.

(f) The second input type is model input.

(g) Another input type is requested.

(h) Interactive, or card, input is requested.

(i) The user will enter pressure (DTFLAG = 2), and it will be entered in millibars (DUFLAG = 5). Temperature will be entered in Kelvin (TUFLAG = 2). The moisture parameter he will enter is dew-point depression (MTFLAG = 2), and as required it will be entered in Kelvin (MUFLAG = 2).

(j) The header line with station elevation, pressure, latitude, longitude, day, month, year, timez, and levels.

(k) The cards that are in this section are the data.

(l) No more input is requested, and the program ends.

7.5.5 Batch BLDATM - Description of Processing. The processing done in this version of BLDATM is identical to that done in the interactive version.

7.5.6 Batch BLDATM - Description of Output. This version of BLDATM creates an output file of atmospheric data for raytrace. This file, is written in binary; for this reason, it cannot be reporduced as an example. The hard copy options are available as in the interactive version, but this output is written directly to the line printer, rather than to a file or disk. For this reason, the status reports and the hard copy output are combined on the print out. However, the

formats for all status reports and hard copy are the same as the interactive version.

7.5.7 Batch BLDATM - Program Execution. As was mentioned, the status reports and the hard copy are both written to the line printer. For this reason, the example in Section 7.2.7 is nearly identical to the execution produced by this version.

7.6 RAYTRA - General

The two versions of RAYTRA, the one at BBNB and the one at USAFETAC, are virtually identical. Neither are, in the true sense, interactive. All control is provided by the two files produced by BLDCOM and BLDATM, and no interaction with the user is required. Note, however, that the programs BLDCOM and BLDATM must be executed prior to the execution of RAYTRA.

7.6.1 RAYTRA - Structure. The structures of the two programs are identical. The only difference in the two is the system subroutines used to provide header information. The interactive version uses date and time, and the batch version uses VMLINE. Other than this, the following structure diagram (Figure 24) is accurate for both versions.

7.6.2 RAYTRA - Performance. RAYTRA requires about 25 K core for storage. The time of execution depends upon how many sets of record were entered during BLDCOM execution and how many atmospheric observations were entered during BLDATM execution. For one set of command records to be performed on one observation, about one second of CPU time is required.

The methods used by raytrace can be found in the internal program documentation and in the previous sections of this technical note.

7.6.3 RAYTRA - Data Base Requirements. The two input files required by RAYTRA are the two output files produced by BLDCOM and BLDATM, and they have been discussed in detail in previous sections.

7.6.4 RAYTRA - Description of Input. Once again, the input files for RAYTRA are the command file produced by BLDCOM and the atmospheric data file produced by BLDATM. Both have been discussed in depth earlier.

7.6.5 RAYTRA - Description of Processing. Since the processing methods of RAYTRA are the subject of this technical note, they will not be mentioned here.

7.6.6 RAYTRA - Description of Output. RAYTRA output is determined by the variables IPRNT and IOUT, both entered during BLDCOM execution.

The user, through his response is BLDCOM to the variable IOUT, can choose to receive a hard copy (human-readable) output from raytrace. In the example execu-

tion of the interactive BLDCOM, Section 7.2.7, a hard copy of raytrace output was requested. An example of this output follows Section 7.5.7.

Also, the user, through input at the time of BLDCOM execution, can choose to receive a binary output file. Such a file was not requested in the sample execution of BLDCOM. It consists of only the parameters listed in the "final results" section of the hard copy output file (example following Section 7.5.7.).

Also, the user chooses the output that will be written to the hard copy file. The variable IPRNT controls whether levels results and/or atmospheric data or neither will be written to the hard copy file. In the example execution of BLDCOM, both were requested as can be seen in the next section.

Note here that in the interactive version, hard copy is written to disk file, and in the batch version, all output is written to the line printer.

7.6.7 RAYTRA - Program Execution. The example execution shown in Figure 25 is the result of the interactive version. The only difference in the batch version is that the hard copy output will be included in the status reports. The example execution is lettered at various points so that a full explanation can follow.

Figure 25 is an example execution of the interactive RAYTRA.

```
(A)  @RAYTRA.SAV;3

          <ETAT-DX>RAYTRACE - VERSION 13 - ON 23-OCT-81  AT 12:20 EST.

(B)  DISK 21 OPENED FOR INPUT FROM RAYTRA.COM.

     DISK 22 OPENED FOR INPUT FROM RAYTRA.ATM.

(C)  DISK 23 OPENED FOR HARD COPY OUTPUT TO RAYTRA.HRD.

(D)  EN CASE  1.
(E)  EN  CASE  2.

(F)  ION COMPLETED.

(G)  INPUT FILE RAYTRA.COM ON DISK 21 CLOSED.

     INPUT FILE RAYTRA.ATM ON DISK 22 CLOSED.

     HARD COPY OUTPUT FILE RAYTRA.HRD ON DISK 23 CLOSED.

(H)  END OF EXECUTION
     CPU TIME: 7.29 ELAPSED TIME: 13.76
     EXIT.
     ^C
     @
```

Figure 25. Example Execution of Interactive RAYTRA.

The command file created by the example execution of interactive BLDCOM is used in this execution of RAYTRA; however, the example execution of interactive BLDATM created a larger file than desired for this example. Therefore, only the model atmosphere 1976 U.S. standard is used as atmospheric input.

Figure 26 is an example of the hard copy output of RAYTRA. It is the result of the above example execution using the input described.

```
UNITED STATES AIR FORCE ENVIRONMENTAL TECHNICAL APPLICATIONS CENTER                                  PAGE  1. 1
AEROSPACE SCIENCES BRANCH
SCOTT AIR FORCE BASE, ILLINOIS 62221

RAYTRACE PROGRAM - VERSION 13 - PREPARED 23-OCT-81  AT 02120 EST.
INPUT FILES:  RAYTRA.COM  - PRODUCED BY BLDCOM.FOR;13
              RAYTRA.ATM - PRODUCED BY BLDATM.FOR;13

USER'S COMMENTS:  TEST FOR RAYTRACE.

INPUT PROGRAM CONTROL:
     ITYPE = 2 => NORMAL PATH
     LEN   = 0 => NORMAL OPERATION
     IPRNT = 3 => PRINT BOTH
     IOUT  = 1 => HARD COPY OUTPUT

INPUT GEOMETRY:
     SENSOR ALTITUDE (H1)  =     0.00000 KM, MSL (H1)
     TARGET ALTITUDE (H2)  =    30.00000 KM, MSL (H2)
     ZENITH ANGLE AT H1    =    45.00000 DEGREES (ANGLE)
     RADAR PATH LENGTH     =    -1.00000 KM      (RANGE)
     EARTH CENTERED ANGLE  =    -1.00000 DEGREES (BETA)
     EXOATMOSPHERIC LEVEL  =  1000.00000 KM, MSL (H3)***** BY DEFAULT
     HEIGHT INTERVALS FROM
          50 KM TO H3      =    50.00000 KM      (DH)***** BY DEFAULT

RADIUS OF EARTH (RE)       =  6367.44659 KM
RADIUS OF CURVATURE (RC)   =  6367.38208 KM

INPUT FREQUENCY (V1)       =    10.00000 CM-1 =  299800.00 MHZ

INPUT ATMOSPHERE:
     ID          =   1962 U. S. STANDARD ATMOSPHERE
     DATE-TIME   =  1/ 1/80  1200 ZULU
     LATITUDE    =  45.0000 DEGREES N
     LONGITUDE   =  90.0000 DEGREES W
     STA ELEV    =   0.0000 KM, MSL

***** H3, DH SET TO DEFAULT VALUES

FINAL RESULTS:
     SENSOR ALTITUDE (H1)   =     0.00000 KM  /  ARRIVAL ANGLE    =  135.32153 DEG (ZENITH)  /  GEOMETRIC ANGLE    =  45.01405 DEG
     TARGET ALTITUDE (H2)   =    30.00000 KM  /  TOTAL BENDING    =    0.01754 DEG (+ DOWN)  /  RETARD CORRECTION  =   0.00338 KM
     ZENITH ANG H1 (ANGLE)  =    45.00000 DEG /  PATH LENGTH      =   53.59464 KM            /  GEOMETRIC ERROR     =   0.00000 KM
     RADAR PATH LEN (RANGE) =    53.59802 KM  /  GEOMETRIC RANGE  =   53.59464 KM            /  TOTAL RANGE ERROR   =   0.00338 KM
     EARTH CNT ANG (BETA)   =     0.33487 DEG /  GROUND RANGE     =   37.68176 KM            /  TOTAL ANGLE ERROR   =   0.01405 DEG
```

Figure 26a.

PARTIAL PATH RESULTS

HEIGHT	ZENITH ANGLE	GEOM ANGLE	EARTH-CTR ANGLE	TOTAL BENDING	APARENT RANGE	PATH LENGTH	GEOMETRIC RANGE	GROUND RANGE	GEOMETRIC ERROR	RETARD CORR	RANGE ERROR	ELEVATION ANGLE ERR
0.000	45.000	45.001	0.00000	0.00199	1.415	1.414	1.414	1.000	0.00000	0.0004	0.00041	0.00138
1.000	44.993	45.002	0.01799	0.00376	2.829	2.828	2.828	1.999	0.00000	0.0008	0.00078	0.00281
2.000	44.986	45.003	0.02498	0.00539	4.243	4.242	4.242	2.998	0.00000	0.0011	0.00110	0.00263
3.000	44.978	45.004	0.03596	0.00678	5.657	5.655	5.655	3.997	0.00000	0.0014	0.00138	0.00359
4.000	44.971	45.004	0.04495	0.00800	7.070	7.069	7.069	4.995	0.00000	0.0016	0.00164	0.00442
5.000	44.963	45.005	0.05392	0.00907	8.484	8.482	8.482	5.993	0.00000	0.0019	0.00186	0.00494
6.000	44.955	45.006	0.06290	0.01003	9.897	9.895	9.895	6.990	0.00000	0.0021	0.00206	0.00568
7.000	44.947	45.006	0.07187	0.01088	11.310	11.308	11.308	7.987	0.00000	0.0022	0.00224	0.00639
8.000	44.939	45.007	0.08083	0.01166	12.723	12.720	12.720	8.983	0.00000	0.0024	0.00240	0.00677
9.000	44.931	45.007	0.08979	0.01235	14.135	14.133	14.133	9.979	0.00000	0.0025	0.00253	0.00732
10.000	44.923	45.008	0.09875	0.01298	15.548	15.545	15.545	10.975	0.00000	0.0027	0.00266	0.00776
11.000	44.914	45.008	0.10771	0.01365	16.960	16.957	16.957	11.970	0.00000	0.0028	0.00276	0.00822
12.000	44.906	45.009	0.11666	0.01423	18.372	18.369	18.369	12.964	0.00000	0.0029	0.00285	0.00870
13.000	44.898	45.009	0.12560	0.01472	19.783	19.780	19.780	13.958	0.00000	0.0029	0.00293	0.00910
14.000	44.889	45.010	0.13454	0.01514	21.195	21.192	21.192	14.952	0.00000	0.0030	0.00300	0.00951
15.000	44.881	45.010	0.14348	0.01550	22.606	22.603	22.603	15.945	0.00000	0.0031	0.00306	0.00994
16.000	44.872	45.010	0.15241	0.01581	24.017	24.014	24.014	16.938	0.00000	0.0031	0.00310	0.01023
17.000	44.863	45.011	0.16134	0.01607	25.428	25.425	25.425	17.931	0.00000	0.0031	0.00315	0.01055
18.000	44.855	45.011	0.17027	0.01630	26.838	26.835	26.835	18.923	0.00000	0.0032	0.00318	0.01082
19.000	44.846	45.011	0.17919	0.01649	28.249	28.246	28.246	19.914	0.00000	0.0032	0.00321	0.01110
20.000	44.837	45.011	0.18811	0.01666	29.659	29.656	29.656	20.905	0.00000	0.0032	0.00324	0.01143
21.000	44.829	45.012	0.19702	0.01680	31.069	31.066	31.066	21.896	0.00000	0.0033	0.00326	0.01164
22.000	44.820	45.012	0.20593	0.01692	32.479	32.475	32.475	22.886	0.00000	0.0033	0.00328	0.01188
23.000	[illegible].811	45.012	0.21484	0.01702	33.888	33.885	33.885	23.875	0.00000	0.0033	0.00329	0.01208
24.000	44.802	45.012	0.22374	0.01711	35.297	35.294	35.294	24.864	0.00000	0.0033	0.00331	0.01226
25.000	44.793	45.013	0.26918	0.01738	42.349	42.337	42.337	29.803	0.00000	0.0034	0.00335	0.01313
30.000	44.749	45.014	0.31252	0.01751	49.378	49.375	49.375	34.731	0.00000	0.0034	0.00337	0.01373
35.000	44.705	45.014	0.33987	0.01754	53.598	53.595	53.595	37.682	0.00000	0.0034	0.00338	0.01405
38.000	44.678											

Figure 26b.

ATMOSPHERIC DATA

INPUT ID: 1962 U. S. STANDARD ATMOSPHERE
DATE-TIME: 1/ 1/80 1200 ZULU
STATION ELEVATION = 0.000 KM, MSL
STATION PRESSURE = 1013.000 MB
STATION LATITUDE = 45.000 DEGREES N
STATION LONGITUDE = 90.000 DEGREES W

33 LEVELS HERE INPUT.

LEVEL	HEIGHT (KM)	TEMP (K)	PRESSURE (MB)	WATER (G/M**3)	REF IND N-UNITS	N GRAD (N/KM)	M UNITS	M GRAD (M/KM)
2	0.000	288.1	1013.000	.590E+01	308.10	-34.8	308.1	122.2
3	1.000	281.6	890.000	.420E+01	273.30	-30.9	430.3	126.1
4	2.000	275.1	795.000	.290E+01	242.40	-28.4	556.5	128.7
5	3.000	268.7	701.000	.190E+01	214.04	-24.3	685.2	132.7
6	4.000	262.2	616.000	.110E+01	189.71	-21.4	817.9	135.7
7	5.000	255.7	540.500	.640E+00	168.34	-18.7	953.6	138.4
8	6.000	249.2	472.200	.380E+00	149.67	-16.7	1092.0	140.3
9	7.000	242.7	411.100	.210E+00	132.93	-14.9	1232.5	142.1
10	8.000	236.2	356.500	.120E+00	118.00	-13.6	1374.4	143.4
11	9.000	229.7	308.000	.460E-01	104.40	-12.1	1517.8	144.9
12	10.000	223.2	265.000	.180E-01	92.27	-11.0	1662.8	146.1
13	11.000	216.8	227.000	.820E-02	81.32	-11.0	1808.9	145.3
14	12.000	216.6	194.000	.370E-02	69.53	-10.1	1954.1	146.9
15	13.000	216.6	165.000	.180E-02	59.41	-8.6	2101.0	148.4
16	14.000	216.6	141.700	.840E-03	50.77	-7.4	2249.5	149.7
17	15.000	216.6	121.100	.720E-03	43.39	-6.3	2399.1	150.7
18	16.000	216.6	103.500	.610E-03	37.09	-5.4	2549.9	151.7
19	17.000	216.6	88.500	.520E-03	31.71	-4.6	2701.5	152.4
20	18.000	216.6	75.650	.440E-03	27.11	-3.9	2854.0	153.1
21	19.000	216.6	64.670	.440E-03	23.17	-3.4	3007.1	153.7
22	20.000	216.6	55.290	.440E-03	19.81	-2.9	3160.8	154.1
23	21.000	217.6	47.290	.480E-03	16.87	-2.5	3314.9	154.6
24	22.000	218.6	40.470	.520E-03	14.37	-2.1	3469.4	154.9
25	23.000	219.6	34.670	.570E-03	12.26	-1.8	3624.4	155.3
26	24.000	220.6	29.720	.610E-03	10.46	-1.5	3779.6	155.5
27	25.000	221.6	25.490	.660E-03	8.93	-1.0	3935.2	156.1
28	30.000	226.5	11.970	.380E-03	4.10	-0.4	4715.6	156.6
29	35.000	236.5	5.746	.160E-03	1.89	-0.2	5498.6	156.8
30	40.000	253.0	2.871	.670E-04	0.88	-0.1	6282.8	157.0
31	45.000	264.2	1.491	.320E-04	0.44	-0.1	7067.6	157.0
32	50.000				0.00	0.0	7852.4	157.0
33	100.000				0.00	0.0	15704.9	157.0
34	150.000				0.00	0.0	23557.3	157.0
35	200.000				0.00	0.0	31409.8	157.0

Figure 25c.

ATMOSPHERIC DATA (CONT)

INPUT ID: 1962 U. S. STANDARD ATMOSPHERE
DATE-TIME: 1/ 1/80 1200 ZULU
STATION ELEVATION = 0.000 KM, MSL
STATION PRESSURE = 1013.000 MB
STATION LATITUDE = 45.000 DEGREES N
STATION LONGITUDE = 90.000 DEGREES W

33 LEVELS WERE INPUT.

LEVEL	HEIGHT (KM)	TEMP (K)	PRESSURE (MB)	WATER (G/M**3)	REF IND N-UNITS	N GRAD (N/KM)	M UNITS	M GRAD (M/KM)
36	250.000				0.00	0.0	39262.2	157.0
37	300.000				0.00	0.0	47114.6	157.0
38	350.000				0.00	0.0	54967.1	157.0
39	400.000				0.00	0.0	62819.5	157.0
40	450.000				0.00	0.0	70672.0	157.0
41	500.000				0.00	0.0	78524.4	157.0
42	550.000				0.00	0.0	86376.9	157.0
43	600.000				0.00	0.0	94229.3	157.0
44	650.000				0.00	0.0	102081.7	157.0
45	700.000				0.00	0.0	109934.2	157.0
46	750.000				0.00	0.0	117786.6	157.0
47	800.000				0.00	0.0	125639.1	157.0
48	850.000				0.00	0.0	133491.5	157.0
49	900.000				0.00	0.0	141343.9	157.0
50	950.000				0.00	0.0	149196.4	157.0
51	1000.000				0.00	----	157048.8	----

Figure 26d.

```
UNITED STATES AIR FORCE ENVIRONMENTAL TECHNICAL APPLICATIONS CENTER                                   PAGE  2. 1
AEROSPACE SCIENCES BRANCH
SCOTT AIR FORCE BASE, ILLINOIS 62221

RAYTRACE PROGRAM - VERSION 13 - PREPARED 23-OCT-81  AT 02:20 EST.
INPUT FILES:  RAYTRA.COM  - PRODUCED BY BLDCOM.FOR;13
              RAYTRA.ATM - PRODUCED BY BLDATM.FOR;13

USER'S COMMENTS:  TEST FOR RAYTRACE.

INPUT PROGRAM CONTROL:
     ITYPE = 2 -> NORMAL PATH
     LEN   = 0 -> NORMAL OPERATION
     IPRNT = 3 -> PRINT BOTH
     IOUT  = 1 -> HARD COPY OUTPUT

INPUT GEOMETRY:
     SENSOR ALTITUDE (H1)  =     0.00000 KM, MSL (H1)
     TARGET ALTITUDE (H2)  =    38.00000 KM, MSL (H2)
     ZENITH ANGLE AT H1    =    45.00000 DEGREES (ANGLE)
     RADAR PATH LENGTH     =    -1.00000 KM      (RANGE)
     EARTH CENTERED ANGLE  =    -1.00000 DEGREES (BETA)
     EXOATMOSPHERIC LEVEL  =  1000.00000 KM, MSL (H3)***** BY DEFAULT
     HEIGHT INTERVALS FROM
          50 KM TO H3      =    50.00000 KM      (DH)***** BY DEFAULT

RADIUS OF EARTH (RE)       =  6367.44659 KM
RADIUS OR CURVATURE (RC)   =  6367.38208 KM

INPUT FREQUENCY (V1)       =     1.00000 CM-1 =   29980.00 MHZ

INPUT ATMOSPHERE:
     ID          =   1962 U. S. STANDARD ATMOSPHERE
     DATE-TIME   =  1/ 1/80  1200 ZULU
     LATITUDE    =  45.0000 DEGREES N
     LONGITUDE   =  90.0000 DEGREES W
     STA ELEV    =   0.0370 KM, MSL

***** H3, DH SET TO DEFAULT VALUES

FINAL RESULTS:
     SENSOR ALTITUDE (H1)  =     0.00000 KM  /  ARRIVAL ANGLE   =  135.32153 DEG (ZENITH)  /  GEOMETRIC ANGLE   =  45.01405 DEG
     TARGET ALTITUDE (H2)  =    38.00000 KM  /  TOTAL BENDING   =    0.01754 DEG (+ DOWN)  /  RETARD CORRECTION =   0.00338 KM
     ZENITH ANG H1 (ANGLE) =    45.00000 DEG /  PATH LENGTH     =   53.59464 KM            /  GEOMETRIC ERROR   =   0.00000 KM
     RADAR PATH LEN (RANGE) =   53.59802 KM  /  GEOMETRIC RANGE =   53.59464 KM            /  TOTAL RANGE ERROR =   0.00338 KM
     EARTH CNT ANG (BETA)  =     0.33907 DEG /  GROUND RANGE    =   37.68176 KM            /  TOTAL ANGLE ERROR =   0.01405 DEG
```

Figure 26e.

PARTIAL PATH RESULTS

HEIGHT	ZENITH ANGLE	GEOM ANGLE	EARTH-CTR ANGLE	TOTAL BENDING	APARENT RANGE	PATH LENGTH	GEOMETRIC RANGE	GROUND RANGE	GEOMETRIC ERROR	RETARD CORR	RANGE ERROR	ELEVATION ANGLE ERR
0.000	45.000	45.001	0.00900	0.00199	1.415	1.414	1.414	1.000	0.00000	0.0004	0.00041	0.00138
1.000	44.993	45.002	0.01799	0.00376	2.829	2.828	2.828	1.999	0.00000	0.0008	0.00078	0.00201
2.000	44.986	45.003	0.02698	0.00539	4.243	4.242	4.242	2.998	0.00000	0.0011	0.00110	0.00263
3.000	44.978	45.004	0.03596	0.00678	5.657	5.655	5.655	3.997	0.00000	0.0014	0.00138	0.00359
4.000	44.971	45.004	0.04495	0.00800	7.070	7.069	7.069	4.995	0.00000	0.0016	0.00164	0.00442
5.000	44.963	45.005	0.05392	0.00907	8.484	8.482	8.482	5.993	0.00000	0.0019	0.00186	0.00494
6.000	44.955	45.006	0.06290	0.01003	9.897	9.895	9.895	6.990	0.00000	0.0021	0.00206	0.00568
7.000	44.947	45.006	0.07187	0.01088	11.310	11.308	11.308	7.987	0.00000	0.0022	0.00224	0.00639
8.000	44.939	45.007	0.08083	0.01166	12.723	12.720	12.720	8.983	0.00000	0.0024	0.00240	0.00677
9.000	44.931	45.007	0.08979	0.01235	14.135	14.133	14.133	9.979	0.00000	0.0025	0.00253	0.00732
10.000	44.923	45.008	0.09875	0.01298	15.548	15.545	15.545	10.975	0.00000	0.0027	0.00266	0.00776
11.000	44.914	45.008	0.10771	0.01365	16.960	16.957	16.957	11.970	0.00000	0.0028	0.00276	0.00822
12.000	44.906	45.009	0.11666	0.01423	18.372	18.369	18.369	12.964	0.00000	0.0029	0.00285	0.00870
13.000	44.898	45.009	0.12560	0.01472	19.783	19.780	19.780	13.958	0.00000	0.0029	0.00293	0.00910
14.000	44.889	45.010	0.13454	0.01514	21.195	21.192	21.192	14.952	0.00000	0.0030	0.00300	0.00951
15.000	44.881	45.010	0.14348	0.01550	22.606	22.603	22.603	15.945	0.00000	0.0031	0.00306	0.00994
16.000	44.872	45.010	0.15241	0.01581	24.017	24.014	24.014	16.938	0.00000	0.0031	0.00310	0.01023
17.000	44.863	45.011	0.16134	0.01607	25.428	25.425	25.425	17.931	0.00000	0.0031	0.00315	0.01055
18.000	44.855	45.011	0.17027	0.01630	26.838	26.835	26.835	18.923	0.00000	0.0032	0.00318	0.01082
19.000	44.846	45.011	0.17919	0.01649	28.249	28.246	28.246	19.914	0.00000	0.0032	0.00321	0.01118
20.000	44.837	45.011	0.18811	0.01666	29.659	29.656	29.656	20.905	0.00000	0.0032	0.00324	0.01143
21.000	44.829	45.012	0.19702	0.01680	31.069	31.066	31.066	21.896	0.00000	0.0033	0.00326	0.01164
22.000	44.820	45.012	0.20593	0.01692	32.479	32.475	32.475	22.886	0.00000	0.0033	0.00328	0.01188
23.000	44.811	45.012	0.21484	0.01702	33.888	33.885	33.885	23.875	0.00000	0.0033	0.00329	0.01208
24.000	44.802	45.012	0.22374	0.01711	35.297	35.294	35.294	24.864	0.00000	0.0033	0.00331	0.01226
25.000	44.793	45.013	0.26818	0.01738	42.340	42.337	42.337	29.803	0.00000	0.0034	0.00335	0.01313
30.000	44.749	45.014	0.31252	0.01751	49.378	49.375	49.375	34.731	0.00000	0.0034	0.00337	0.01373
35.000	44.705	45.014	0.33907	0.01754	53.598	53.595	53.595	37.682	0.00000	0.0034	0.00338	0.01405
38.000	44.678											

Figure 26f.

ATMOSPHERIC DATA

INPUT ID: 1962 U. S. STANDARD ATMOSPHERE
DATE-TIME: 1/ 1/80 1200 ZULU
STATION ELEVATION = 0.000 KM, MSL
STATION PRESSURE = 1013.000 MB
STATION LATITUDE = 45.000 DEGREES N
STATION LONGITUDE = 90.000 DEGREES W

33 LEVELS WERE INPUT.

LEVEL	HEIGHT (KM)	TEMP (K)	PRESSURE (MB)	WATER (G/M**3)	REF IND N-UNITS	N GRAD (N/KM)	M UNITS	M GRAD (M/KM)
2	0.000	288.1	1013.000	.5900E+01	308.10	-34.8	308.1	122.2
3	1.000	281.6	898.600	.4200E+01	273.38	-30.9	439.3	126.1
4	2.000	275.1	795.000	.2900E+01	242.40	-28.4	556.5	128.7
5	3.000	268.7	701.200	.1800E+01	214.04	-24.3	685.2	132.7
6	4.000	262.2	616.600	.1100E+01	189.71	-21.4	817.9	135.7
7	5.000	255.7	540.500	.6400E+00	168.34	-18.7	953.6	138.4
8	6.000	249.2	472.200	.3800E+00	149.67	-16.7	1092.8	140.3
9	7.000	242.7	411.100	.2100E+00	132.93	-14.9	1232.3	142.1
10	8.000	236.2	356.500	.1200E+00	118.00	-13.6	1374.4	143.4
11	9.000	229.7	308.000	.4600E-01	104.40	-12.1	1517.8	144.9
12	10.000	223.2	265.000	.1800E-01	92.27	-11.0	1662.8	146.1
13	11.000	216.8	227.000	.8200E-02	81.32	-11.0	1808.9	145.3
14	12.000	216.6	194.000	.3700E-02	69.53	-10.1	1954.1	146.9
15	13.000	216.6	165.800	.1600E-02	59.41	-8.6	2101.0	148.4
16	14.000	216.6	141.700	.8400E-03	50.77	-7.4	2249.5	149.7
17	15.000	216.6	121.100	.7200E-03	43.39	-6.3	2399.1	150.7
18	16.000	216.6	103.500	.6100E-03	37.09	-5.4	2549.9	151.7
19	17.000	216.6	88.500	.5200E-03	31.71	-4.6	2701.5	152.4
20	18.000	216.6	75.650	.4400E-03	27.11	-3.9	2854.0	153.1
21	19.000	216.6	64.670	.4400E-03	23.17	-3.4	3007.1	153.7
22	20.000	216.6	55.290	.4400E-03	19.81	-2.9	3160.8	154.1
23	21.000	217.6	47.290	.4800E-03	16.87	-2.5	3314.9	154.6
24	22.000	218.6	40.470	.5200E-03	14.37	-2.1	3469.4	154.9
25	23.000	219.6	34.670	.5700E-03	12.26	-1.8	3624.4	155.3
26	24.000	220.6	29.720	.6100E-03	10.46	-1.5	3779.6	155.5
27	25.000	221.6	25.490	.6600E-03	8.93	-1.0	3935.2	156.1
28	30.000	226.5	11.970	.3800E-03	4.18	-0.4	4715.6	156.6
29	35.000	236.5	5.746	.1600E-03	1.89	-0.2	5498.6	156.8
30	40.000	253.4	2.871	.6700E-04	0.80	-0.1	6282.8	157.0
31	45.000	264.2	1.491	.3200E-04	0.44	-0.1	7067.6	157.0
32	50.000				0.00	0.0	7852.4	157.0
33	100.000				0.00	0.0	15704.9	157.0
34	150.000				0.00	0.0	23557.3	157.0
35	200.000				0.00	0.0	31409.8	157.0

Figure 26g.

ATMOSPHERIC DATA (CONT)

INPUT ID: 1962 U. S. STANDARD ATMOSPHERE
DATE-TIME: 1/ 1/80 1200 ZULU
STATION ELEVATION = 0.000 KM, MSL
STATION PRESSURE = 1013.000 MB
STATION LATITUDE = 45.000 DEGREES N
STATION LONGITUDE = 90.000 DEGREES W

33 LEVELS WERE INPUT.

LEVEL	HEIGHT (KM)	TEMP (K)	PRESSURE (MB)	WATER (G/M**3)	REF IND N-UNITS	N GRAD (N/KM)	M UNITS	M GRAD (M/KM)
36	250.000				0.00	0.0	39262.2	157.0
37	300.000				0.00	0.0	47114.6	157.0
38	350.000				0.00	0.0	54967.1	157.0
39	400.000				0.00	0.0	62819.5	157.0
40	450.000				0.00	0.0	70672.0	157.0
41	500.000				0.00	0.0	78524.4	157.0
42	550.000				0.00	0.0	86376.9	157.0
43	600.000				0.00	0.0	94229.3	157.0
44	650.000				0.00	0.0	102081.7	157.0
45	700.000				0.00	0.0	109934.2	157.0
46	750.000				0.00	0.0	117786.6	157.0
47	800.000				0.00	0.0	125639.1	157.0
48	850.000				0.00	0.0	133491.5	157.0
49	900.000				0.00	0.0	141343.9	157.0
50	950.000				0.00	0.0	149196.4	157.0
51	1000.000				0.00	----	157048.8	----

<EXAMPLE OUTPUT W/ BLOCOM/BLOATM AS SHOWN>

Figure 26h.

Figure 26. Example of RAYTRA Output.

7.7 Example JCL

The following JCL (Job Control Language) is required to execute the three program RAYTRACE package on the USAFETAC 4341 IBM.

```
//  JOB (Job Name Information)
//  ASSGN SYS007, X'T01',X'C0' (BLDCOM ouput - RAYTRA input)
(If KLOW input requested through BLDATM, then)
//  ASSGN SYS008,X'T02',          (KLOW)
(If model input requested through BLDATM, then)
//  ASSGN SYS009,X'T03',            (MODEL INPUT)
//  ASSGN SYS010,X'T04',X'C0' (BLDATM output - RAYTRA input)
(If point analysis input, when implemented, requested, then)
//  ASSGN SYS011,X'T05',X,C0"
(If binary output from RAYTRA requested, then)
//  ASSGN SYS012,X'T06',X'C0'
//  TLBL IJSY07,'DE181502,BLDCODAT'
(If KLOW input requested, then)
//  TLBL IJSYS08
(If model input requested, then)
//  TLBL IJSY09
//  TLBL IJSYS10,'DE181502,BLDATDAT'
(If point analysis, when implemented, requested, then)
//  TLBL IJSYS11
(If binary output of RAYTRA requested, then)
//  TLBL IJSYS12
//  Pause, mount tapes for (job name)
//  EXEC DNABLDCO
<<Insert data cards for BLDCOM>>
/*
//  EXEC DNABLDAT
<<Insert data cards for BLDATM>>
/*
(If KLOW input requested, then)
//  MTC run,SYS008
(If model input requested, then)
//  MTC run,SYS009)
(If Point analysis input, when implemented, requested, then)
//  MTC run,SYS011
(If KLOW input requested, then
//  ASSGN SYS008,UA
(If model input requested, then)
//  ASSGN SYS009,UA
(If point analysis, when implemented, requested, when)
//  ASSGN SYS011,UA
//  EXEC DNARAYTRA
```

```
/*
//  MTC run,SYS007
//  MTC run,SYS010
(If binary raytrace output requested, then)
//  MTC run,SYS012
/*
/&
```

Chapter 8

APPLICATION EXAMPLES

8.1 Typical Radar Problem

Find the elevation angle error and range error for a Midway Island radar that is pointing at a satellite on 1 January 1977 at 1200 GMT. The radar elevation (H1) is 150-m MSL, and its operating wavelength is 10 cm (wave number 0.1 cm^{-1}). The measured (apparent) elevation angle of the radar is 4 degrees (zenith angle is 86 degrees). The satellite altitude (H2) is 900-km MSL. The radar's "design velocity" is c (speed of light in a vacuum).

This is a straightforward example of the use of RAYTRA. The first step for an analyst is to check the availability of good upper-air data for the location and time in question. Since Midway Island is a raob site, a good sounding was taken. Once the analyst has processed this sounding from the DATSAV data base (using ENAPRECON, ENAEXTR and BLDATM or typing it into BLDTAM at the terminal), he then prepares the geometry and electrical information by executing BLDCOM at the terminal. Finally, he is ready to execute RAYTRA. After executing RAYTRA with a desired printout of (1) final results, (2) partial path results, and (3) data used, the analyst will receive output as shown in Figures 27 through 29.

Figure 27 indicates a typically small-range error of 31.07 m for a total range in excess of 3000 km. Nearly all this range error results from retardation, not from curved path considerations. The elevation angle error, as indicated, is 0.23640 degrees. Figures 28 and 29 are self-explanatory.

8.2 Typical Satellite Problem

A satellite at an altitude (H1) of 722 km views the Earth at a nadir angle of 30 degrees (zenith angle is 150 degrees). The viewing sensor on board the satellite operates at wavelength of 10 microns (wave number is 1000 cm^{-1}). What is the ground range from the point on Earth directly beneath the satellite to the point on Earth being viewed by the satellite? Both points on the Earth are at mean sea level. A subarctic winter atmospheric model may be used.

Results of case 2 are depicted in Figures 30 through 32. The ground range, as indicated in Figure 30, is 425.378 km. Note that the partial path results begin at the satellite's altitude, not the ground.

```
UNITED STATES AIR FORCE ENVIRONMENTAL TECHNICAL APPLICATIONS CENTER                                   PAGE  3. 1
AEROSPACE SCIENCES BRANCH
SCOTT AIR FORCE BASE, ILLINOIS 62221

RAYTRACE PROGRAM - VERSION 13 - PREPARED 18-SEP-81  AT 01148 EST.
INPUT FILES:  RAYTRA.COM  - PRODUCED BY BLOCOM.FOR;13
              RAYTRA.ATM - PRODUCED BY BLOATM.FOR;13
USER'S COMMENTS:  RAYTRACE TEST RUNS  CASE 1

INPUT PROGRAM CONTROL:
     ITYPE = 2 -> NORMAL PATH
     LEN   = 0 -> NORMAL OPERATION
     IPRNT = 3 -> PRINT BOTH
     IOUT  = 1 -> HARD COPY OUTPUT

INPUT GEOMETRY:
     SENSOR ALTITUDE (H1)   =     0.15000 KM, MSL (H1)
     TARGET ALTITUDE (H2)   =   900.00000 KM, MSL (H2)
     ZENITH ANGLE AT H1     =    86.00000 DEGREES (ANGLE)
     RADAR PATH LENGTH      =    -1.00000 KM      (RANGE)
     EARTH CENTERED ANGLE   =    -1.00000 DEGREES (BETA)
     EXOATMOSPHERIC LEVEL   =  1000.00000 KM, MSL (H3)***** BY DEFAULT
     HEIGHT INTERVALS FROM
          50 KM TO H3       =    50.00000 KM      (DH)***** BY DEFAULT

RADIUS OF EARTH (RE)        =  6373.35742 KM
RADIUS OR CURVATURE (RC)    =  6349.68738 KM

INPUT FREQUENCY (V1)        =     0.10000 CM-1 =    2998.00 MHZ

INPUT ATMOSPHERE:
     ID          = INPUT FROM ALOW FILE.
     DATE-TIME   =  1/ 1/77  1200 ZULU
     LATITUDE    =  28.2200 DEGREES N
     LONGITUDE   = 177.3700 DEGREES W
     STA ELEV    =   0.0130 KM, MSL

***** H3, DH SET TO DEFAULT VALUES

FINAL RESULTS:
     SENSOR ALTITUDE (H1)    =     0.15000 KM  /  ARRIVAL ANGLE    =   119.86826 DEG (ZENITH)  /  GEOMETRIC ANGLE    =   86.23648 DEG
     TARGET ALTITUDE (H2)    =   900.00000 KM  /  TOTAL BENDING     =     0.24265 DEG (+ DOWN)  /  RETARD CORRECTION =   0.03073 KM
     ZENITH ANG H1 (ANGLE)   =    86.00000 DEG /  PATH LENGTH       =  3106.15828 KM            /  GEOMETRIC ERROR    =   0.00033 KM
     RADAR PATH LEN (RANGE)  =  3106.18893 KM  /  GEOMETRIC RANGE    =  3106.15787 KM            /  TOTAL RANGE ERROR  =   0.03107 KM
     EARTH CNT ANG (BETA)    =    25.22127 DEG /  GROUND RANGE       =  2805.82985 KM            /  TOTAL ANGLE ERROR  =   0.23648 DEG
```

Figure 27. Case 1 Example Output (1st page).

PARTIAL PATH RESULTS

HEIGHT	ZENITH ANGLE	GEOM ANGLE	EARTH-CTR ANGLE	TOTAL BENDING	APPARENT RANGE	PATH LENGTH	GEOMETRIC RANGE	GROUND RANGE	GEOMETRIC ERROR	RETARD CORR	RANGE ERROR	ELEVATION ANGLE ERR
0.150	86.000	86.032	0.14367	0.06314	16.027	16.023	16.023	15.981	0.00000	0.0040	0.00403	0.03162
1.279	85.919	86.035	0.16966	0.04900	18.839	18.833	18.833	18.784	0.00000	0.0056	0.00560	0.03930
1.400	85.880	86.041	0.23724	0.05928	26.469	26.462	26.462	26.390	0.00000	0.0077	0.00769	0.04073
2.032	85.821	86.046	0.27750	0.09025	30.966	30.958	30.958	30.872	0.00000	0.0088	0.00880	0.04565
2.360	85.812	86.054	0.36504	0.08485	40.732	40.721	40.721	40.605	0.00000	0.0111	0.01106	0.05569
3.081	85.718	86.068	0.46113	0.10389	51.460	51.447	51.447	51.295	0.00001	0.0134	0.01345	0.06377
3.889	85.641	86.079	0.52324	0.13072	58.394	58.379	58.379	58.202	0.00001	0.0148	0.01478	0.07007
4.418	85.606	86.074	0.55922	0.13539	62.413	62.397	62.397	62.206	0.00001	0.0155	0.01547	0.07416
4.727	85.574	86.086	0.67428	0.14822	75.263	75.246	75.246	75.004	0.00002	0.0175	0.01752	0.08572
5.730	85.471	86.096	0.75852	0.15985	88.024	88.007	88.007	87.712	0.00003	0.0193	0.01934	0.09560
6.749	85.368	86.100	0.84035	0.16309	93.817	93.797	93.797	93.477	0.00003	0.0201	0.02010	0.09960
7.219	85.320	86.101	0.85907	0.16495	95.910	95.889	95.889	95.568	0.00003	0.0203	0.02037	0.10109
7.390	85.305	86.104	0.94338	0.17109	108.861	108.840	108.840	108.488	0.00003	0.0209	0.02097	0.10444
7.797	85.264	86.112	1.00606	0.17919	112.339	112.317	112.317	111.918	0.00004	0.0222	0.02226	0.11165
8.754	85.169	86.116	1.07161	0.18376	119.668	119.645	119.645	119.201	0.00005	0.0230	0.02302	0.11594
9.375	85.108	86.116	1.07747	0.18469	120.547	120.524	120.524	120.076	0.00005	0.0231	0.02311	0.11643
9.458	85.101	86.119	1.12088	0.18696	125.178	125.154	125.154	124.682	0.00005	0.0235	0.02355	0.11901
9.847	85.062	86.124	1.20476	0.19311	135.007	134.982	134.982	134.457	0.00006	0.0244	0.02444	0.12417
10.780	84.980	86.128	1.28048	0.19746	143.022	142.997	142.997	142.426	0.00006	0.0250	0.02510	0.12810
11.406	84.912	86.132	1.35587	0.20225	151.466	151.440	151.440	150.821	0.00007	0.0257	0.02574	0.13217
12.160	84.841	86.145	1.63105	0.21694	182.275	182.247	182.247	181.431	0.00009	0.0275	0.02757	0.14585
15.000	84.580	86.162	2.08408	0.23094	233.144	233.115	233.114	231.913	0.00013	0.0293	0.02939	0.16242
20.000	84.138	86.175	2.50610	0.23727	280.429	280.399	280.399	278.766	0.00016	0.0301	0.03023	0.17451
25.000	83.722	86.183	2.90047	0.24416	324.779	324.739	324.739	322.634	0.00019	0.0304	0.03062	0.18327
30.000	83.329	86.190	3.27336	0.24149	366.648	366.618	366.618	364.081	0.00021	0.0306	0.03081	0.18985
35.000	82.957	86.195	3.62511	0.24210	406.433	406.403	406.402	403.239	0.00022	0.0307	0.03098	0.19493
40.000	82.604	86.199	3.96132	0.24239	444.412	444.381	444.381	440.637	0.00023	0.0307	0.03095	0.19898
45.000	82.266	86.202	4.28307	0.24265	480.813	480.782	480.782	476.425	0.00024	0.0307	0.03097	0.20227
50.000	81.944	86.218	6.96585	0.24265	786.785	786.755	786.754	774.790	0.00028	0.0307	0.03101	0.21707
100.000	79.251	86.224	9.07410	0.24265	1031.100	1031.077	1031.077	1009.340	0.00030	0.0307	0.03104	0.22382
150.000	77.135	86.227	10.86034	0.24265	1241.274	1241.243	1241.243	1208.806	0.00031	0.0307	0.03104	0.22701
200.000	75.342	86.229	12.43153	0.24265	1428.992	1428.961	1428.961	1382.757	0.00032	0.0307	0.03105	0.22906
250.000	73.745	86.231	13.84580	0.24265	1600.540	1600.510	1600.509	1540.051	0.00032	0.0307	0.03105	0.23052
300.000	72.346	86.232	15.13079	0.24265	1759.748	1759.717	1759.717	1683.847	0.00032	0.0307	0.03105	0.23162
350.000	71.049	86.232	16.33411	0.24265	1909.150	1909.119	1909.119	1816.787	0.00032	0.0307	0.03105	0.23248

Figure 28. Case 1 Example Output (2nd page).

PARTIAL PATH RESULTS (CONT)

HEIGHT	ZENITH ANGLE	GEOM ANGLE	EARTH-CTR ANGLE	TOTAL BENDING	APARENT RANGE	PATH LENGTH	GEOMETRIC RANGE	GROUND RANGE	GEOMETRIC ERROR	RETARD CORR	RANGE ERROR	ELEVATION ANGLE ERR
400.000	69.849	86.233	17.44866	0.24265	2050.530	2050.499	2050.498	1948.737	0.00033	0.0307	0.03107	0.23310
450.000	68.731	86.234	18.49480	0.24265	2185.195	2185.164	2185.164	2057.075	0.00033	0.0307	0.03107	0.23376
500.000	67.681	86.234	19.48201	0.24265	2314.140	2314.109	2314.109	2166.857	0.00032	0.0307	0.03104	0.23426
550.000	66.690	86.235	20.41771	0.24265	2438.139	2438.109	2438.108	2270.908	0.00033	0.0307	0.03107	0.23468
600.000	65.751	86.235	21.30788	0.24265	2557.812	2557.782	2557.781	2369.894	0.00034	0.0307	0.03107	0.23506
650.000	64.858	86.235	22.15740	0.24265	2673.662	2673.631	2673.631	2464.358	0.00034	0.0307	0.03107	0.23538
700.000	64.006	86.236	22.97033	0.24265	2786.103	2786.072	2786.071	2554.751	0.00035	0.0307	0.03107	0.23568
750.000	63.190	86.236	23.75908	0.24265	2895.482	2895.451	2895.451	2641.452	0.00034	0.0307	0.03107	0.23594
800.000	62.408	86.236	24.49956	0.24265	3002.093	3002.063	3002.062	2724.786	0.00035	0.0307	0.03107	0.23618
850.000	61.656	86.236	25.22127	0.24265	3106.189	3106.158	3106.158	2805.030	0.00033	0.0307	0.03107	0.23640
900.000	60.932											

Figure 19. Case 1 Example Output (3rd page).

```
UNITED STATES AIR FORCE ENVIRONMENTAL TECHNICAL APPLICATIONS CENTER                                   PAGE  4, 1
AEROSPACE SCIENCES BRANCH
SCOTT AIR FORCE BASE, ILLINOIS 62221

RAYTRACE PROGRAM - VERSION 13 - PREPARED 18-SEP-81  AT 01:48 EST.
INPUT FILES:  RAYTRA.COM  - PRODUCED BY BLDCOM.FOR;13
              RAYTRA.ATM - PRODUCED BY BLDATM.FOR;13

USER'S COMMENTS:  RAYTRACE TEST RUNS  CASE 2

INPUT PROGRAM CONTROL:
     ITYPE = 2 => NORMAL PATH
     LEN   = 0 => NORMAL OPERATION
     IPRNT = 3 => PRINT BOTH
     IOUT  = 1 => HARD COPY OUTPUT

INPUT GEOMETRY:
     SENSOR ALTITUDE (H1)   =   722.00000 KM, MSL  (H1)
     TARGET ALTITUDE (H2)   =     0.00000 KM, MSL  (H2)
     ZENITH ANGLE AT H1     =   150.00000 DEGREES  (ANGLE)
     RADAR PATH LENGTH      =    -1.00000 KM       (RANGE)
     EARTH CENTERED ANGLE   =    -1.00000 DEGREES  (BETA)
     EXOATMOSPHERIC LEVEL   =  1000.00000 KM, MSL  (H3)***** BY DEFAULT
     HEIGHT INTERVALS FROM
          50 KM TO H3       =    50.00000 KM       (DH)***** BY DEFAULT

RADIUS OF EARTH (RE)        =  6373.35742 KM
RADIUS OF CURVATURE (RC)    =  6349.68738 KM

INPUT FREQUENCY (V1)        =  1000.00000 CM-1 =  10.000 MICROMETERS

INPUT ATMOSPHERE:
     ID          = INPUT FROM BLOW FILE.
     DATE-TIME   =  1/ 1/77  1200 ZULU
     LATITUDE    =  28.2227 DEGREES N
     LONGITUDE   = 177.3700 DEGREES W
     STA ELEV    =   0.0130 KM, MSL

***** H3, DH SET TO DEFAULT VALUES


FINAL RESULTS:
     SENSOR ALTITUDE (H1)   =   722.00000 KM  /  ARRIVAL ANGLE    =    33.82815 DEG (ZENITH)  /  GEOMETRIC ANGLE    =  150.00013 DEG
     TARGET ALTITUDE (H2)   =     0.01324 KM  /  TOTAL BENDING    =     0.01820 DEG (+ DOWN)  /  RETARD CORRECTION =    0.00283 KM
     ZENITH ANG H1 (ANGLE)  =   150.00000 DEG /  PATH LENGTH      =   850.12422 KM            /  GEOMETRIC ERROR    =    0.00000 KM
     RADAR PATH LEN (RANGE) =   850.12705 KM  /  GEOMETRIC RANGE  =   850.12422 KM            /  TOTAL RANGE ERROR  =    0.00283 KM
     EARTH CNT ANG (BETA)   =     3.82482 DEG /  GROUND RANGE     =   425.37769 KM            /  TOTAL ANGLE ERROR  =    0.00013 DEG
```

Figure 30. Case 2 Example Output (1st page).

PARTIAL PATH RESULTS

HEIGHT	ZENITH ANGLE	GEOM ANGLE	EARTH-CTWT ANGLE	TOTAL BENDING	APARENT RANGE	PATH LENGTH	GEOMETRIC RANGE	GROUND RANGE	GEOMETRIC ERROR	RETARD CORR	RANGE ERROR	ELEVATION ANGLE ERR
722.000	150.000	150.000	0.10294	0.00002	25.417	25.417	25.417	11.446	0.00000	0.0000	0.00000	-0.00005
700.000	149.897	150.000	0.33971	0.00000	83.281	83.281	83.281	37.774	0.00000	0.0000	0.00000	0.00000
650.000	149.659	150.000	0.58047	0.00000	141.288	141.288	141.288	64.546	0.00000	0.0000	0.00000	-0.00001
600.000	149.418	150.000	0.82532	0.00000	199.441	199.441	199.441	91.774	0.00000	0.0000	0.00000	-0.00001
550.000	149.172	150.000	1.07439	0.00000	257.744	257.744	257.744	119.472	0.00000	0.0000	0.00000	-0.00001
500.000	148.922	150.000	1.32778	0.00000	316.201	316.201	316.201	147.651	0.00000	0.0000	0.00000	0.00001
450.000	148.668	150.000	1.58562	0.00000	374.818	374.818	374.818	176.326	0.00000	0.0000	0.00000	0.00000
400.000	148.409	150.000	1.84804	0.00000	433.600	433.600	433.600	205.510	0.00000	0.0000	0.00000	-0.00000
350.000	148.146	150.000	2.11517	0.00000	492.551	492.551	492.551	235.219	0.00000	0.0000	0.00000	0.00000
300.000	147.878	150.000	2.38714	0.00000	551.678	551.678	551.678	265.467	0.00000	0.0000	0.00000	-0.00000
250.000	147.605	150.000	2.66410	0.00000	610.985	610.985	610.985	296.271	0.00000	0.0000	0.00000	-0.00000
200.000	147.327	150.000	2.94623	0.00000	670.478	670.478	670.478	327.648	0.00000	0.0000	0.00000	0.00000
150.000	147.044	150.000	3.23359	0.00000	730.164	730.164	730.164	359.614	0.00000	0.0000	0.00000	0.00000
100.000	146.755	150.000	3.52644	0.00000	790.050	790.050	790.050	392.188	0.00000	0.0000	0.00000	0.00000
50.000	146.461	150.000	3.55613	0.00002	796.050	796.050	796.050	395.479	0.00000	0.0000	0.00000	0.00000
45.000	146.431	150.000	3.58568	0.00005	802.051	802.051	802.051	398.777	0.00002	0.0000	0.00001	0.00000
40.000	146.402	150.000	3.61539	0.00010	808.055	808.055	808.055	402.081	0.00000	0.0000	0.00002	0.00000
35.000	146.372	150.000	3.64515	0.00021	814.061	814.061	814.061	405.392	0.00000	0.0000	0.00005	0.00000
30.000	146.342	150.000	3.67497	0.00043	820.069	820.069	820.069	408.709	0.00000	0.0001	0.00010	0.00000
25.000	146.312	150.000	3.70484	0.00087	826.079	826.079	826.079	412.032	0.00000	0.0002	0.00020	0.00001
20.000	146.283	150.000	3.73477	0.00163	832.092	832.092	832.092	415.361	0.00000	0.0004	0.00040	0.00002
15.000	146.254	150.000	3.75162	0.00271	835.508	835.507	835.507	417.255	0.00000	0.0006	0.00061	0.00003
12.160	146.238	150.000	3.75632	0.00299	836.415	836.414	836.414	417.758	0.00000	0.0007	0.00068	0.00003
11.400	146.233	150.000	3.76056	0.00325	837.264	837.264	837.264	418.229	0.00000	0.0007	0.00075	0.00003
10.640	146.229	150.000	3.76568	0.00361	838.291	838.290	838.290	418.799	0.00000	0.0008	0.00084	0.00004
9.847	146.225	150.000	3.76846	0.00374	838.768	838.767	838.767	419.064	0.00000	0.0009	0.00089	0.00004
9.450	146.222	150.000	3.76851	0.00379	838.859	838.858	838.858	419.114	0.00000	0.0009	0.00089	0.00004
9.375	146.222	150.000	3.77224	0.00405	839.606	839.605	839.605	419.529	0.00000	0.0010	0.00097	0.00004
8.750	146.218	150.000	3.77799	0.00453	840.757	840.756	840.756	420.168	0.00000	0.0011	0.00110	0.00005
7.797	146.213	150.000	3.78013	0.00472	841.247	841.246	841.246	420.440	0.00000	0.0012	0.00115	0.00005
7.390	146.211	150.000	3.78146	0.00488	841.453	841.452	841.452	420.555	0.00000	0.0012	0.00117	0.00006
7.219	146.210	150.000	3.78428	0.00511	842.018	842.017	842.017	420.869	0.00000	0.0013	0.00126	0.00006
6.749	146.207	150.000	3.79401	0.00572	843.245	843.243	843.243	421.550	0.00000	0.0014	0.00143	0.00007
5.730	146.202	150.000	3.79604	0.00637	844.452	844.450	844.450	422.221	0.00000	0.0016	0.00162	0.00008
4.727	146.196	150.000	3.79830	0.00661	844.924	844.922	844.922	422.428	0.00000	0.0017	0.00168	0.00007

Figure 31. Case 2 Example Output (2nd page).

PARTIAL PATH RESULTS (CONT)

HEIGHT	ZENITH ANGLE	GEOM ANGLE	EARTH-CTR ANGLE	TOTAL BENDING	APARENT RANGE	PATH LENGTH	GEOMETRIC RANGE	GROUND RANGE	GEOMETRIC ERROR	RETARD CORR	RANGE ERROR	ELEVATION ANGLE ERR
4.418	146.195	150.000	3.80148	0.00691	845.461	845.459	845.459	422.782	0.00000	0.0018	0.00179	0.00008
3.889	146.192	150.000	3.80635	0.00751	846.433	846.431	846.431	423.323	0.00000	0.0020	0.00198	0.00009
3.801	146.188	150.000	3.81069	0.00811	847.301	847.299	847.299	423.806	0.00000	0.0022	0.00215	0.00010
2.360	146.184	150.000	3.81266	0.00840	847.696	847.694	847.694	424.025	0.00000	0.0022	0.00224	0.00010
2.032	146.182	150.000	3.81598	0.00886	848.361	848.358	848.358	424.395	0.00000	0.0024	0.00239	0.00011
1.480	146.179	150.000	3.81719	0.00902	848.603	848.600	848.600	424.529	0.00000	0.0024	0.00245	0.00011
1.279	146.178	150.000	3.82433	0.01013	850.030	850.027	850.027	425.323	0.00000	0.0026	0.00288	0.00013
0.894	146.172	150.000	3.82482	0.01020	850.127	850.124	850.124	425.378	0.00000	0.0026	0.00283	0.00013
0.013	146.172											

Figure 32. Case 2 Example Output (3rd page).

8.3 Atypical Space Problem

An interstellar probe, launched from the planet Spargan in the Antares star system, is nearing Pluto and beaming "hello" messages toward Earth. A specially designed receiver, operating at a wavelength of 10 m (wave number is 0.001 cm^{-1}), is located on Midway Island and picks up the "hello" message at 1200 GMT on 1 January 1977. The strongest signal is found when the receiver antenna is pointing at an elevation angle of 6.4 degrees (zenith angle is 83.6 degrees) and at a bearing of 255 degrees. The antenna height is 5-m MSL. What is the elevation angle error associated with the receiver antenna?

This is an example of a path to a distant celestial object (one where all adjacent incoming rays may be treated as parallel). The results are indicated in Figures 33 through 35. As shown in Figure 33, the total error is 0.16761 degrees. Had this been treated as a ray from one point to another, where H2 was actually at the default H3 value of 1000 km, the computed angle error would have been the same. A value of H2 less than 50 km would have resulted in a different value. Note that the receiver antenna height of 0.005 km was automatically adjusted to the surface elevation (0.013 km) of the Midway Island raob site. Because of the special geometry in this case, the total angle error is the same as the total bending.

```
UNITED STATES AIR FORCE ENVIRONMENTAL TECHNICAL APPLICATIONS CENTER
AEROSPACE SCIENCES BRANCH
SCOTT AIR FORCE BASE, ILLINOIS 62221

RAYTRACE PROGRAM - VERSION 13 - PREPARED 18-SEP-81  AT 01148 EST.
INPUT FILES:  RAYTRA.COM  - PRODUCED BY BLOCOM.FOR#13
              RAYTRA.ATM - PRODUCED BY BLDATM.FOR#13

USER'S COMMENTS:  RAYTRACE TEST RUNS CASE3

INPUT PROGRAM CONTROL:
     ITYPE = 3 => DISTANT PATH
     LEN   = 1 => LONGER PATH
     IPRNT = 3 => PRINT BOTH
     IOUT  = 1 => HARD COPY OUTPUT

INPUT GEOMETRY:
     SENSOR ALTITUDE (H1)  =      0.00500 KM, MSL (H1)
     TARGET ALTITUDE (H2)  =     -1.00000 KM, MSL (H2)
     ZENITH ANGLE AT H1    =     83.60000 DEGREES (ANGLE)
     RADAR PATH LENGTH     =     -1.00000 KM      (RANGE)
     EARTH CENTERED ANGLE  =     -1.00000 DEGREES (BETA)
     EXOATMOSPHERIC LEVEL  =   1000.00000 KM, MSL (H3)***** BY DEFAULT
     HEIGHT INTERVALS FROM
          50 KM TO H3      =     50.00000 KM      (DH)***** BY DEFAULT

RADIUS OF EARTH (RE)       =  6373.35742 KM
RADIUS OR CURVATURE (RC)   =  6349.68750 KM

INPUT FREQUENCY (V1)       =     0.00100 CM-1 =      29.98 MHZ

INPUT ATMOSPHERE:
     ID          = INPUT FROM KLOW FILE.
     DATE-TIME   =  1/ 1/77  1200 ZULU
     LATITUDE    =  28.2200 DEGREES N
     LONGITUDE   = 177.3700 DEGREES
     STA ELEV    =   0.0130 KM, MSL

***** H1 WAS BELOW THE SURFACE -- RESET TO:   0.013 KM


***** H3, DH SET TO DEFAULT VALUES


FINAL RESULTS:
     SENSOR ALTITUDE (H1)  =      0.0130 KM  /  ARRIVAL ANGLE    =   0.00000 DEG (ZENITH)  /  GEOMETRIC ANGLE    =  83.43239 DEG
     TARGET ALTITUDE (H3)  =     -0.00000 KM  /  TOTAL BENDING    =   0.00000 DEG (+ DOWN)  /  RETARD CORRECTION  =   0.00000 KM
     ZENITH ANG H1 (ANGLE) =     83.60000 DEG /  PATH LENGTH      =   0.00000 KM            /  GEOMETRIC ERROR    =   0.00000 KM
     RADAR PATH LEN (RANGE) =     0.00000 KM  /  GEOMETRIC RANGE   =   0.00000 KM            /  TOTAL RANGE ERROR  =   0.00000 KM
     EARTH CNT ANG (BETA)  =     0.00000 DEG /  GROUND RANGE      =   0.00000 KM            /  TOTAL ANGLE ERROR  =   0.16761 DEG
```

Figure 33. Case 3 Example Output (1st page).

PARTIAL PATH RESULTS

HEIGHT	ZENITH ANGLE	GEOM ANGLE	EARTH-CTR ANGLE	TOTAL BENDING	APARENT RANGE	PATH LENGTH	GEOMETRIC RANGE	GROUND RANGE	GEOMETRIC ERROR	RETARD CORR	RANGE ERROR	ELEVATION ANGLE ERR
0.013	83.600	83.602	0.00649	0.00288	0.727	0.726	0.726	0.722	0.00000	0.0003	0.00025	0.00191
0.094	83.596	83.622	0.10100	0.04442	11.311	11.307	11.307	11.235	0.00000	0.0035	0.00346	0.02216
1.279	83.543	83.625	0.11693	0.03548	13.095	13.091	13.091	13.007	0.00000	0.0039	0.00395	0.02463
1.402	83.518	83.628	0.16947	0.04202	17.972	17.967	17.967	17.850	0.00000	0.0053	0.00529	0.02845
2.032	83.481	83.632	0.18625	0.06183	20.861	20.855	20.855	20.718	0.00000	0.0060	0.00600	0.03168
2.360	83.475	83.638	0.24264	0.05836	27.178	27.170	27.170	26.990	0.00000	0.0075	0.00746	0.03827
3.081	83.415	83.644	0.32528	0.07077	34.198	34.189	34.189	33.958	0.00000	0.0090	0.00902	0.04369
3.889	83.364	83.648	0.34406	0.08839	38.769	38.759	38.759	38.494	0.00000	0.0099	0.00990	0.04784
4.416	83.341	83.651	0.36980	0.09147	41.430	41.420	41.420	41.135	0.00000	0.0104	0.01036	0.05060
4.727	83.320	83.658	0.44634	0.10000	50.010	49.999	49.999	49.649	0.00001	0.0117	0.01172	0.05835
5.738	83.252	83.665	0.52328	0.10783	58.640	58.627	58.627	58.208	0.00001	0.0129	0.01295	0.06501
6.749	83.183	83.668	0.55850	0.11204	62.590	62.577	62.577	62.125	0.00001	0.0135	0.01347	0.06781
7.219	83.149	83.669	0.57127	0.11267	64.023	64.009	64.009	63.546	0.00001	0.0136	0.01365	0.06877
7.390	83.139	83.671	0.60158	0.11550	67.423	67.409	67.409	66.918	0.00001	0.0141	0.01406	0.07107
7.797	83.112	83.676	0.67237	0.12109	75.366	75.351	75.351	74.791	0.00001	0.0149	0.01495	0.07602
8.754	83.046	83.679	0.71793	0.12426	80.480	80.465	80.465	79.860	0.00001	0.0155	0.01548	0.07901
9.375	83.004	83.679	0.72342	0.12491	81.096	81.080	81.080	80.470	0.00001	0.0155	0.01554	0.07935
9.450	82.999	83.681	0.75238	0.12658	84.347	84.331	84.331	83.691	0.00001	0.0158	0.01585	0.08115
9.847	82.971	83.685	0.81422	0.13083	91.290	91.274	91.274	90.570	0.00002	0.0165	0.01648	0.08475
10.700	82.914	83.688	0.86501	0.13391	96.994	96.977	96.977	96.220	0.00002	0.0169	0.01694	0.08755
11.406	82.866	83.690	0.91887	0.13733	103.044	103.027	103.027	102.212	0.00002	0.0174	0.01740	0.09039
12.160	82.815	83.700	1.11831	0.14798	125.458	125.440	125.440	124.396	0.00003	0.0187	0.01873	0.09972
15.000	82.626	83.712	1.45701	0.15842	163.568	163.548	163.548	162.071	0.00004	0.0200	0.02007	0.11218
20.000	82.296	83.721	1.78128	0.16330	200.111	200.090	200.090	198.142	0.00005	0.0207	0.02078	0.12107
25.000	81.975	83.728	2.09265	0.16558	235.253	235.232	235.232	232.776	0.00006	0.0209	0.02100	0.12755
30.000	81.665	83.732	2.39243	0.16665	269.141	269.120	269.119	266.122	0.00007	0.0211	0.02115	0.13241
35.000	81.365	83.736	2.68177	0.16715	301.899	301.877	301.877	298.306	0.00007	0.0211	0.02122	0.13615
40.000	81.075	83.739	2.96164	0.16739	333.634	333.613	333.612	329.437	0.00008	0.0212	0.02125	0.13911
45.000	80.795	83.742	3.23287	0.16761	364.438	364.417	364.417	359.607	0.00008	0.0212	0.02127	0.14151
50.000	80.523	83.753	5.59246	0.16761	634.644	634.622	634.622	622.067	0.00009	0.0212	0.02128	0.15262
100.000	78.154	83.757	7.52988	0.16761	859.987	859.966	859.966	837.563	0.00010	0.0212	0.02129	0.15655
150.000	76.210	83.759	9.24557	0.16761	1057.914	1057.892	1057.892	1023.942	0.00011	0.0212	0.02129	0.15862
200.000	74.528	83.760	10.69789	0.16761	1236.893	1236.872	1236.872	1189.920	0.00011	0.0212	0.02129	0.15992
250.000	73.038	83.761	12.05217	0.16761	1401.797	1401.776	1401.775	1340.542	0.00010	0.0212	0.02129	0.16082
300.000	71.677	83.761	13.29749	0.16761	1555.728	1555.707	1555.707	1479.042	0.00010	0.0212	0.02129	0.16158

Figure 34. Case 3 Example Output (2nd page).

PARTIAL PATH RESULTS (CONT)

HEIGHT	ZENITH ANGLE	GROM ANGLE	EARTH-CTR ANGLE	TOTAL BENDING	APPARENT RANGE	PATH LENGTH	GEOMETRIC RANGE	GROUND RANGE	GEOMETRIC ERROR	RETARD CORR	RANGE ERROR	ELEVATION ANGLE ERR
1350.000	70.422	83.762	14.45384	0.16761	1762.828	1762.787	1762.787	1627.642	0.00010	0.0212	0.02129	0.16202
1400.000	69.261	83.762	15.53565	0.16761	1838.561	1838.540	1838.540	1727.951	0.00012	0.0212	0.02130	0.16244
1450.000	68.176	83.763	16.55507	0.16761	1913.126	1913.125	1913.125	1841.177	0.00011	0.0212	0.02130	0.16278
1500.000	67.154	83.763	17.51471	0.16761	1996.360	1996.359	1996.359	1948.257	0.00010	0.0212	0.02127	0.16307
1550.000	66.188	83.763	18.43106	0.16761	2218.215	2217.994	2217.994	2049.934	0.00012	0.0212	0.02130	0.16332
1600.000	65.274	83.764	19.3[illegible]927	0.16761	2335.568	2335.567	2335.567	2146.812	0.00011	0.0212	0.02130	0.16354
1650.000	64.406	83.764	20.[illegible]1944	0.16761	2449.555	2449.534	2449.534	2239.346	0.00010	0.0212	0.02130	0.16373
1700.000	63.581	83.764	22.93239	0.16761	2561.247	2560.276	2560.276	2328.273	0.00011	0.0212	0.02130	0.16389
1750.000	62.7[illegible]	83.764	21.69419	0.16761	2668.131	2668.117	2668.117	2413.223	0.00012	0.0212	0.02130	0.16405
1800.000	61.992	83.764	22.83492	0.16761	2773.431	2773.310	2773.310	2495.139	0.00012	0.0212	0.02130	0.16418
1850.000	61.253	83.764	23.[illegible]1391	0.16761	2876.124	2876.177	2876.177	2574.080	0.00010	0.0212	0.02127	0.16430
1900.000	60.541	83.764	23.[illegible]	0.16761	2976.726	2976.725	2976.725	2652.273	0.00011	0.0212	0.02130	0.16441
1950.000	59.853	83.765	24.[illegible]9259	0.16761	3075.3[illegible]	3075.279	3075.279	2723.918	0.00011	0.0212	0.02130	0.16452
*******	59.189											

Figure 35. Case 3 Example Output (3rd page).

Chapter 9

LOWTRAN/FASCODE MODELS

The programs BLDTAM and BLDCOM are used to provide input to AFGL's latest version of LOWTRAN (LOWTRN) as well as to RAYTRA. The theory and instructions for use of LOWTRN are covered in a separate AFGL report (see USAFETAC/DNE for latest programs codes and documentation). The input files for LOWTRN are LATMIN.ext (from BLDTAM) and LOWIN.ext (from BLDCOM). The upper-case file names are mandatory, and the lower-case "ext" is user-determined.

The program RAYTRA is used to provide input geometry information to the latest version of AFGL's FASCODE program (see USAFETAC/DNE for latest program codes and documentation). The input file for FASCODE is FASIN.ext.

As of the writing of this technical note, neither LOWTRN (latest version LOWTRAN5) nor FASCOD (latest model version FASCOD1) were fully operational at USAFETAC on the IBM 4341.

Refer to the Figure 1 for the flowchart that depicts how LOWTRN relates to the raytrace program sequence. FASCOD may be used in place of LOWTRN.

REFERENCES AND BIBLIOGRAPHY

[1] Documentation for USAFETAC Program ENAPRECON.

[2] Documentation for USAFETAC Program ENAEXTR.

[3] Documentation for USAFETAC Program ENS2AMOD.

[4] Nipko, Capt Paul T., and Capt Randolph G. Arbeiter, 1978: "Point Analysis User's Guide," AFGWC TM 78-003, 30 September 1978, 78 p (AD-A063648).

[5] Documentation for USAFETAC Program RKLOW.

[6] Kneizys, F. X., et al., 1980: "Atmospheric Transmittance/Radiance Computer Code LOWTRAN 5," AFGL-TR-80-0067 (or AFGL-ERP-697), 21 February 1980, 228 p.

[7] Smith, H. E. P., et al., 1978: " FASCODE-Fast Atmospheric Signature Code (Spectral Transmittance and Radiance)," AFGL-TR-78-0081, 16 January 1978 142 p (AD-A057506).

[8] Moreland, W. B., 1965: "Estimating Meteorological Effects of Radar Propagation, Volume I, Test," AWSTR 183, Volume 1, January 1965, 198 p (AD-A041877).

[9] GPO, 1976: 1976 US Standard Atmosphere, US Government Printing Office.

[10] Weisbrod, S. and L. J. Anderson, 1958: "Simple Methods for Computing Tropospheric and Ionospheric Refractive Effects on Radio Waves," Proceedings of the IRE, September 1958 (AD-206048).

[11] Atlas, D., et al., 1965: "Some Aspects of Electromagnetic Wave Propagation," Chapter 9 in: AFCRL Handbook of Geophysics and Space Environments, S. L. Valley, 1965 (AD-A056800).

[12] Goedeke, 1976: "Computing Propagation Delay and Elevation Angle Error Due to Refractive Effects of the Atmosphere on Radio Waves," NSA Technical Memorandum R52/TM003/76, 25 February 1976.

[13] Stacey, Frank D., 1969: Physics of the Earth, Wiley and Sons, New York, 324 p.

[14] Saucier, Walter J., 1955: Principles of Meteorological Analysis, University of Chicago Press, 438 p.