ADA 113 979

# Thermophilic Transformation of 2, 4, 6 - Trinitrotoluene in Composting Systems

BY D. L. KAPLAN
AND
A. M. KAPLAN

MARCH 1982

DTIC
ELECTE
MAR 8

UNITED STATES ARMY NATIONAL
DEVELOPMENT LABORATORIES
NATICK, MASSACHUSETTS 01760

RELEASE; DISTRIBUTION UNLIMITED

ADVANCED TECHNOLOGY LABORATORY

28 25 0

UNCLASSIFIED

SECURITY CLASSIFICATION OF THIS PAGE (When Data Entered)

| REPORT DOCUMENTATION PAGE | | READ INSTRUCTIONS BEFORE COMPLETING FORM |
|---|---|---|
| 1. REPORT NUMBER<br>NATICK/TR-82/015 | 2. GOVT ACCESSION NO.<br>AD-A113 979 | 3. RECIPIENT'S CATALOG NUMBER |
| 4. TITLE (and Subtitle)<br>THERMOPHILIC TRANSFORMATION OF 2,4,6-TRINITROTOLUENE IN COMPOSTING SYSTEMS | | 5. TYPE OF REPORT & PERIOD COVERED<br>Final Report<br>6. PERFORMING ORG. REPORT NUMBER<br>NATICK/TR-82/015 |
| 7. AUTHOR(s)<br>D. L. Kaplan and A. M. Kaplan | | 8. CONTRACT OR GRANT NUMBER(s) |
| 9. PERFORMING ORGANIZATION NAME AND ADDRESS<br>US Army Natick Research & Development Laboratories<br>Science & Advanced Technology Laboratory<br>DRDNA-YEP, Natick, MA 01760 | | 10. PROGRAM ELEMENT, PROJECT, TASK AREA & WORK UNIT NUMBERS<br>13214129000<br>P112.01.01, W-1 |
| 11. CONTROLLING OFFICE NAME AND ADDRESS<br>US Army Toxic & Hazardous Materials Agency<br>Aberdeen Proving Ground, MD 21010 | | 12. REPORT DATE<br>January 1982<br>13. NUMBER OF PAGES<br>27 |
| 14. MONITORING AGENCY NAME & ADDRESS(if different from Controlling Office) | | 15. SECURITY CLASS. (of this report)<br>UNCLASSIFIED<br>15a. DECLASSIFICATION/DOWNGRADING SCHEDULE |

16. DISTRIBUTION STATEMENT (of this Report)

Approved for public release, distribution unlimited.

17. DISTRIBUTION STATEMENT (of the abstract entered in Block 20, if different from Report)

18. SUPPLEMENTARY NOTES

DTIC
ELECTE
APR 27 1982
S D
H

19. KEY WORDS (Continue on reverse side if necessary and identify by block number)

20. ABSTRACT (Continue on reverse side if necessary and identify by block number)

The biotransformation of 2,4,6-trinitrotoluene (TNT) was studied in lab scale composting systems. Under these thermophilic (55°C) conditions the same biochemical transformation scheme was found as that previously reported for mesophiles. TNT, $^{14}C$-labelled, was used to trace these transformations. Thermophilic fungi, actinomycetes, and bacteria were isolated from both test (1.5% TNT) and control (no TNT) compost systems. Intermediates were detected by thin layer chromatography, high-performance liquid chromatography, infrared spectroscopy, and scintillation counting. An increasing percentage of the

DD FORM 1 JAN 73 1473 EDITION OF 1 NOV 65 IS OBSOLETE

UNCLASSIFIED

SECURITY CLASSIFICATION OF THIS PAGE (When Data Entered)

20. original $^{14}C$-label became bound into humus-like components, becoming unextractable with solvents and undetectable by standard analytical methodologies.

Accession For
NTIS GRA&I
DTIC TAB
Unannounced
Justification
By
Distribution/
Availability Codes
Avail and/or
Dist Special
A

DTIC COPY INSPECTED 2

## Preface

Operations involved in munitions manufacture, loading, assembling, and packing may result in the contamination of soils and water with 2,4,6-trinitrotoluene (TNT). Composting, aerobic metabolism at high (thermophilic) temperatures, has been proposed as one alternative treatment for these wastes. This work evaluates the composting process as a treatment for TNT and identifies the transformation and final end-products formed under these conditions.

This work was supported by the U. S. Army Toxic and Hazardous Materials Agency under project number 13214129000.

We thank Dr. R. Klausmeier, U. S. Naval Weapons Support Center, Crane, IN, for his supply of finished (cured) TNT-compost and his helpful conversations. We thank S. Cowburn and P. Riley for their technical assistance, B. Wiley for the identification of thermophilic fungus, Dr. J. H. Cornell for the synthesis of 2',4,6,6'-tetranitro-2,4'-azoxytoluene, C. DiPietro for his mass spectrometer analysis, and Dr. J. Walsh and R. Bagalawis for the Fourier Transform Infrared Spectrophotometer analyses.

TABLE OF CONTENTS


| | Page |
|---|---|
| LIST OF FIGURES | 4 |
| LIST OF TABLES | 4 |
| INTRODUCTION | 5 |
| MATERIALS AND METHODS | 7 |
| Chemicals | 7 |
| Extraction of Unlabelled Compost | 8 |
| Composting Systems | 9 |
| Extraction of Labelled Compost | 10 |
| Isolation of Thermophilic Microorganisms | 13 |
| RESULTS | |
| Unlabelled Compost Extracts | 13 |
| Compost Systems | 14 |
| Labelled Compost Extracts | 15 |
| Organic Matter Fractionation | 18 |
| Isolation of Thermophilic Microorganisms | 18 |
| DISCUSSION | 18 |
| CONCLUSIONS | 24 |
| REFERENCES | 25 |

## ILLUSTRATIVE DATA


| | | Page |
|---|---|---|
| Figure 1. | Bench scale composting system. | 10 |
| Figure 2. | Extraction scheme for test and control compost. | 11 |
| Figure 3. | Oven and compost temperatures. | 14 |
| Figure 4. | Characterization of solvent extracts from test compost. | 15 |
| Figure 5. | Fourier transform infrared spectroscopic tracings of (A) 2A, (B) 4A, (C) sample mixture ether extract, and (D) subtraction of 4A from C. | 17 |
| Figure 6. | Biotransformation scheme for TNT in compost. Isolated products are boxed. | 22 |
| Table 1. | Solvent fractions from test compost | 15 |
| Table 2. | TNT and reduction products identified in solvent extracts from compost incubated 91 days with $^{14}C$-labelled TNT. | 16 |
| Table 3. | Dry weights of compost fractions | 19 |
| Table 4. | Organic matter fractions from test compost. | 19 |

## THERMOPHILIC TRANSFORMATIONS OF 2,4,6-TRINITROTOLUENE IN COMPOSTING SYSTEMS

### INTRODUCTION

Composting is defined as the aerobic microbially mediated decomposition of organic materials at elevated (thermophilic) temperatures. If proper environmental conditions are met, composting appears to be a feasible process for the stabilization of organic matter including leaves,[1] sewage sludge[2], and industrial wastes.[3] In general, optimal environmental conditions for composting include a temperature near 55°C, 40 to 60% moisture content, a carbon to nitrogen ratio near 30 to 1, sufficient aeration to maintain aerobic conditions, periodic mixing of composting materials, and the use of composting materials of high surface area.[4,5,6]

[1] Strom, P. F., M. L. Morris and M. S. Finstein. 1980. Leaf composting through appropriate, low-level technology. Comp. Sci. Land Util. Nov/Dec 44-48.

[2] Epstein. E., G. B. Willson, W. D. Burge, D. C. Mullen and N. K. Enkiri. 1976. A forced aeration system for composting wastewater sludge. J. Water Poll. Control Fed. 48: 688-694.

[3] Alpert, J. E. and E. Epstein. 1981. Composting industrial wastes. Com. Sci. Land Util. Sept/Oct 23-25.

[4] Suler, D. J. and M. S. Finstein. 1977. Effect of temperature, aeration, and moisture on $CO_2$ formation in bench scale, continuously thermophilic composting of solid waste. Appl. and Environ. Microbiol. 345-350.

[5] Finstein, M. S., J. Cirello, D. J. Suler, M. L. Morris and P. F. Strom. 1980. Microbial ecosystems responsible for anaerobic digestion and composting. J. Water Poll. Control Fed. 52(11): 2675-2685.

[6] MacGregor, S. T., F. C. Miller, K. M. Psarianos and M. S. Finstein. 1981. Composting process control based on interaction between microbial heat output and temperature. Appl. Environ. Microbiol. 41(6): 1321-1330.

The composting process includes the curing or stabilization of organic compounds, and this is accomplished mainly through the metabolic activities of thermophilic microorganisms which flourish under composting conditions. In large scale composting systems, the compost piles undergo self-heating as a result of the exothermic metabolic reactions which occur during the metabolism of the organic matter. A heating cycle is induced by temperature elevation of the system. The extremes (around 60°C) result in a slowdown in metabolic activity with subsequent cooling, until the cycle begins again.[7]

Initial research on the composting of 2,4,6-trinitrotoluene (TNT) was conducted at the U. S. Naval Weapons Support Center, Crane, IN.[8] The results of these studies indicated that a potential existed for the application of the composting process to the treatment of TNT-contaminated wastes. Only traces of TNT were detected in the cured compost, and no TNT transformation products were detected in solvent extracts or in trapped effluent gases from the pile. As a result of these findings, the authors recommended this treatment for disposal of TNT wastes.[9]

The advantages of the composting process were said to include the ability to treat up to 10% dry wt TNT, use a variety of organic materials in the compost, utilize rapid decomposition rates, avoid the production of TNT conversion products found in other systems, and degrade TNT to completion.[10]

[7] Finstein, M. S. 1980. Composting microbial ecosystem: Implications for process design and control. Comp. Sci. Land Util. July/August 25-39.

[8] Osmon, J. L. and C. C. Andrews. 1978. The biodegradation of TNT in enhanced soil and compost systems. U. S. Army Armament Research and Development Command ARLCD-TR-77032. Dover, NJ. (ADE 400 073)

[9] Ibid.

[10] Ibid.

These initial experiments on composting TNT were terminated before a definitive determination of the fate of the substrate could be made. Accordingly, it was necessary to further examine the transformations of TNT in the composting process. The purpose of our studies was to define the pathway for TNT degradation in compost and to develop appropriate extraction procedures to achieve this purpose. These findings would be instrumental in evaluating the composting process as an alternative treatment for TNT-contaminated wastes.

Osmon and Andrews[11] were not able to trace the transformations of TNT by chemical methods. Therefore, in our work we used $^{14}C$-labelled TNT for this purpose. Under these conditions, large scale composting was not feasible, and our experiments were conducted on a bench scale.

## MATERIALS AND METHODS

Chemicals: TNT was purchased from Eastman Kodak (Rochester, NY) and recrystallized. Dr. J. C. Hoffsomer, U.S. Naval Surface Weapons Center, Silver Spring, MD, supplied samples of 2-amino-4,6-dinitrotoluene (2A), 4-amino-2,6-dinitrotoluene (4A), 2,4-diamino-6-nitrotoluene (2,4DA), 2,6-diamino-4-nitrotoluene (2,6DA), 4-hydroxylamino-2,6-dinitrotoluene (4OHA), 2,2',6,6'-tetranitro-4,4'-azoxytoluene (4,4'Az) and 4,4',6,6'-tetranitro-2,2'-azoxytoluene (2,2'Az). The 2'4,6,6'-tetranitro-2,4'-azoxytoluene (2,4'Az) was synthesized according to Sitzmann.[12]

[11] See footnote 8. p.6.

[12] Sitzmann. M. F. 1973. Chemical reduction of 2,4,6-trinitrotoluene (TNT) initial products. NTIS AD-764060. 1-9.

The $^{14}C$-UL-TNT, $4.18 \times 10^5$ Bq (11.3 μCi) per mg, was synthesized from $^{14}C$-toluene (New England Nuclear, Boston, MA). R.E. Klausmeier, U.S. Naval Weapons Support Center, Crane, IN, supplied samples of cured, finished compost initiated with (test) and without (control) 1.0% TNT.

Extraction of Unlabelled Compost: Samples of the dried ground control and test composts supplied by R. Klausmeier were subjected to four different extraction schemes.

1. A high-pressure liquid $CO_2$ extractor (J.& W. Scientific Co. Orangevale, CA) was used for a 24-hour extraction. The extracts were analyzed on a Perkin-Elmer Model 283 Infrared Spectrophotometer (IR).

2. Samples, 100 g, were Soxhlet-extracted with water and acetone for 48 hours each, and the insoluble material was then extracted with hot dimethylsulfoxide. These extracts were analyzed by IR, thin layer chromatography (TLC) and high-performance liquid chromatography (HPLC).

3. A modification of the extraction scheme of Sutherland and Wilkinson,[13] as used by Carpenter *et al.*,[14] was used to extract biomacromolecules including proteins, carbohydrates, lipids, and nucleic acids. Extracts were analyzed by IR and TLC.

4. Extraction of organic matter fractions, humic, fulvic and humin, was accomplished using 0.5 N NaOH and 0.1 N sodium pyrophosphate. Fractionation

[13] Sutherland, I. W. and J. F. Wilkinson. 1971. Chemical extraction methods in microbial cells. p345-383. In J. R. Norris and D. W. Ribbons (Eds.), Methods in Microbiology, 5B. Academic Press Inc., New York.

[14] Carpenter, D. F., N. G. McCormick, J. H. Cornell and A. M. Kaplan. 1978. Microbial transformation of $^{14}C$-labelled 2,4,6-trinitrotoluene in an activated-sludge system. Appl. Environ. Microbiol. 35(5): 949-954.

generally followed the procedure of Kononova and Bel'Chicova [15] and Stevenson.[16] Extracts were analyzed by IR and mass spectroscopy on a Finnegan Model 4000 Mass Spectrometer (MS) from the probe.

Composting Systems: The composting mixture consisted of horse manure (~40% dry wt.), alfalfa (~40% dry wt.), and hay clippings, dead hardwood leaves and garden soil (~20% dry wt.). All components were air-dried, mixed, shredded, and 112 g dry wt (including active compost) was added to 1-Liter Erlenmeyer flasks. Trinitrotoluene, 1.7 g (1.5% TNT by dry weight of compost) was added to the test flasks only. The $^{14}C$-labelled TNT ($6.25 \times 10^4$ BQ, 1.69 μCi, 3mg) diluted with unlabelled TNT was dissolved in acetone. The acetone was evaporated under a stream of nitrogen after addition to the compost. Sufficient distilled water was added to the control and test systems to bring the moisture level up to 60%. The carbon to nitrogen ratio was about 30 to 1. A seed of active compost was added to all flasks.

The four composting systems were set in an oven at $55^{o}$ C and agitated twice weekly. The flasks were continuously flushed with a stream of air which first passed through a series of successive traps: 100mL 1N HCl, 100mL 5N NaOH, and an empty flask. The air stream then entered the composting system via a perforated aeration loop in the bottom of the flask which allowed it to filter up through the compost. The stream then exited successively through an empty flask, 100mL 1N HCl, an empty flask, 100mL 1N NaOH, a drying tube, and an activated carbon

[15] Kononova, M. M. and N. P. Bel'chikova. 1961. Quick methods of determining the humus composition of mineral soils. Trans. in Soviet Soil Sci. 1112-1121. (1960 Pochvovedenlye 11:1149)

[16] Stevenson, F. J. 1965. Gross chemical fractionation of organic metter. 1409-1421. In C. A. Black (ed.). Methods of soil analysis of Pt. 2. American Society of Agronomy, Inc., Madison, WI.

trap (Figure 1.). The acid, to trap volatile amines, and base, to trap $CO_2$, traps were changed twice weekly during the first three weeks and weekly thereafter.

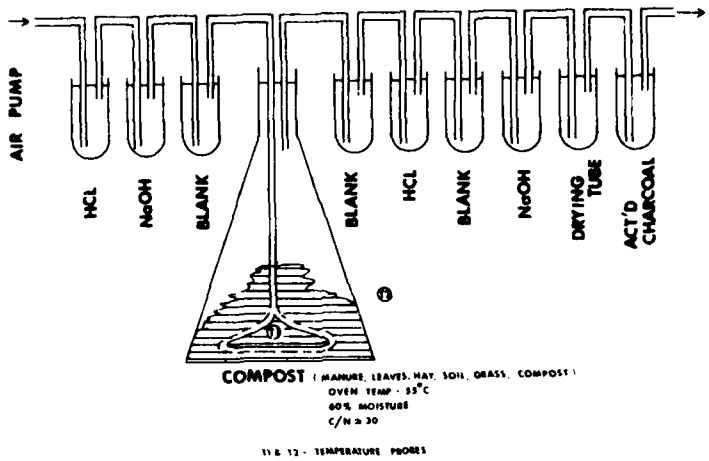


Figure 1. Bench scale composting system.

Aliquots of the solutions from the traps were dissolved in 15 mL of Aquasol 2 scintillation cocktail (New England Nuclear, Boston, MA) and the radioactivity assayed in a Packard Model 3255 Tri Carb Liquid Scintillation Counter. Each vial was corrected for quench with an external standard.

In a separate experiment, identical systems were initiated with temperature probes inserted into the center of a control and a test (1.5% unlabelled TNT) compost pile and in the oven, which was preset at 55$^{o}$C. Temperature readings were recorded to the nearest 0.5$^{o}$C for 31 days with a YSI Model 425C tele-thermometer (Yellow Springs, OH).

<u>Extraction of Labelled Compost</u>: The test compost with $^{14}$C-labelled TNT and the

corresponding controls were incubated for 91 days. Entire systems, taken at 24 and 91 days, were oven-dried at 50°C and then exhaustively extracted by refluxing successively with anhydrous ether, three successive 500 mL volumes for 24 hours, absolute ethanol, three successive 500 mL volumes for 24 hours, water, one 500 mL volume for 24 hours, and acetone, three successive 500 mL volumes for 24 hours (Figure 2).

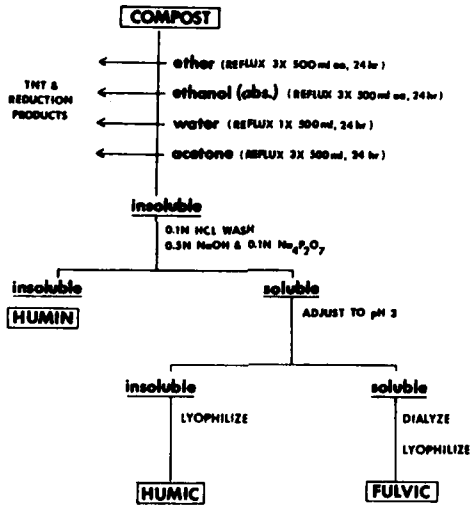


Figure 2. Extraction scheme for test and control compost.

These solvent extracts were counted for radioactivity and analyzed by TLC, HPLC, and FTIR. The thin-layer chromatograms were scraped into scintillation vials in one-tenth or one-twentieth increments and counted for radioactivity in order to obtain radioactive profiles. The solvent systems for TLC were

reported previously.[17] HPLC was performed on a Waters liquid chromatograph equipped with two Model 6000A solvent pumps, a Model 450 variable wavelength detector set at 230 nm, a Data Module, and a Model 720 System Controller. The HPLC conditions were also reported previously.[18] FTIR analyses were conducted on a Nicolet Model 7000 Fourier Transform Infrared Spectrophotometer using KBr pellets. In all analytical identifications, appropriate standards were used.

After solvent extraction, the remaining insoluble materials were re-dried at 50°C, rinsed with 0.1 N HCl and extracted overnight with 0.5 N NaOH and 0.1 N sodium pyrophosphate. The insoluble material, humin, was oven-dried at 50°C and ground in a Wiley Mill. The soluble fraction was treated with concentrated HCl to bring the pH to 1.0. The precipitate which settled out overnight was collected by centrifugation at 10,000 rpm during 10 minute runs. This precipitate was repurified twice by solubilizing in 0.5 N NaOH and reprecipitation with HCl. This purified humic acid was lyophilized and no further fractionation was undertaken (Figure 2).

The organic material still soluble in the combined fractions, after the humic acid was precipitated out, was concentrated by rotary evaporation at 45°C.

[17] Kaplan, D. L. and A. M. Kaplan. 1982. 2,4,6-trinitrotoluene-surfactant complexes: decomposition, mutagenicity and soil leaching. U.S. Army Natick R & D Labs. NATICK/TR-82/006, Natick, MA 10760

[18] Kaplan, D. L. and A. M. Kaplan. 1982. Separation of mixtures of 2,4,6-trinitrotoluene reduction products with liquid chromatography. Anal. Chim. Acta. In Press.

To remove inorganic contaminants, the liquid concentrate was dialyzed in tubing with a 3500 molecular weight (MW) cutoff for seven days at 3°C against five changes, 22 liters each, of distilled water. After dialysis the liquid concentrate containing the fulvic acid was lyophilized.

Samples of the organic matter fractions were counted for radioactivity and analyzed by IR and MS by probe analysis.

Isolation of Thermophilic Microorganisms: Samples of test and control compost were taken from the incubation flasks and dispersed in 100 mL of diluent containing 8.5 g NaCl, 0.3 g $KH_2PO_4$, and 0.6 g $Na_2HPO_4$ per liter distilled water. Colonies were isolated on yeast starch agar, nutrient agar, soil extract nutrient agar, soy trypticase agar, actinomycete medium, or malt extract agar plates incubated at 55°C. Bacterial identifications were accomplished according to Breed *et al.*,[19] and Gordon *et al.*;[20] fungi were identified according to Cooney and Emerson.[21]

## RESULTS

Unlabelled Compost Extracts: No evidence was obtained for qualitative differences between fractions isolated from the control and the test unlabelled cured composts by the four different extraction methods. The inability to detect the presence of

[19] Breed, R. S., E. G. D. Murray and N. R. Smith. 1957. Bergey's manual of determinative bacteriology. Seventh Ed. Williams and Wilkins Co., Baltimore, MD.

[20] Gordon, R. E., W. C. Haynes and C. H. Pang. 1973. The Genus Bacillus Agriculture Handbook No. 427. Agric. Res. Ser. U. S. Dept. Agric. Washington, DC.

[21] Cooney, D. G. and R. Emerson, 1964. Thermophilic Fungi. W. H. Freeman and Co., San Francisco, London.

TNT or its metabolites in the test compost extracts indicate the necessity for using $^{14}C$-labelled TNT in laboratory scale experiments in order to follow TNT transformations.

Compost Systems: The laboratory scale composting systems operated successfully throughout the 91-day study period. Moisture collected in the blank traps was recycled into the reaction flasks. No significant(above background) $^{14}C$-labelled compounds, $^{14}CO_2$, or volatile amines were recovered in the effluent alkali, acid,and activated carbon traps. Temperature probes revealed little variation (less than 1.5°C, 55.0 to 56.5) in temperatures during the experiment once equilibration occurred. No self-heating of the compost above oven temperatures occurred under these controlled temperature conditions (Figure 3).

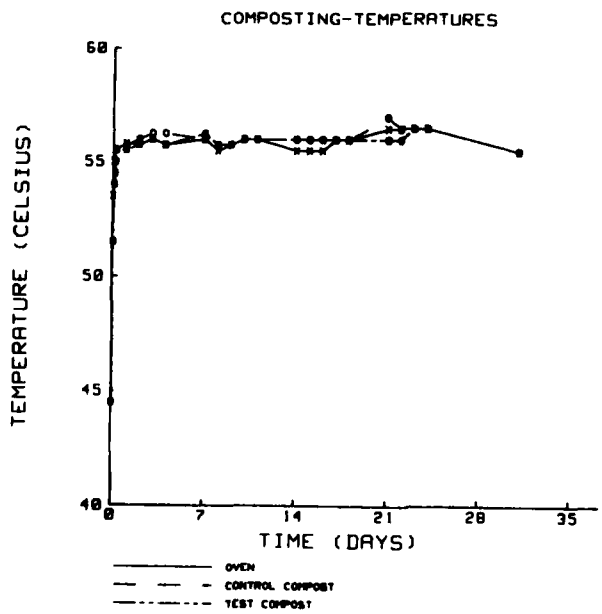


Figure 3. Oven and compost temperatures.

Labelled Compost Extracts: Separate flasks containing the control and $^{14}C$-labelled test compost were extracted after 24 and 91 days. The distribution of radioactivity recovered in the four extracts is presented in Table 1. Most of the counts were in the ether fraction, while the total counts recovered in these fractions decreased from 86.6 to 61.5% from 24 to 91 days of curing.

Table 1. Solvent fractions from test compost.

| Solvent | dpms recovered (% of total) 24 day compost | 91 day compost |
|---|---|---|
| ether | 2,529,240 (67.4) | 1,812,445 (48.3) |
| ethanol (absolute) | 79,534 ( 2.1) | 57,088 ( 1.5) |
| water | 507,948 (13.5) | 365,041 ( 9.7) |
| acetone | 134,778 ( 3.6) | 77,697 ( 2.0) |
| totals | 3,251,500 (86.6) | 2,312,271 (61.5) |

[1]$3.75 \times 10^6$ dpm initial.

TNT, 2A, and 4A were identified in the ether extract from the test compost after 24 days of incubation (Figure 4). Presence of these compounds was confirmed.

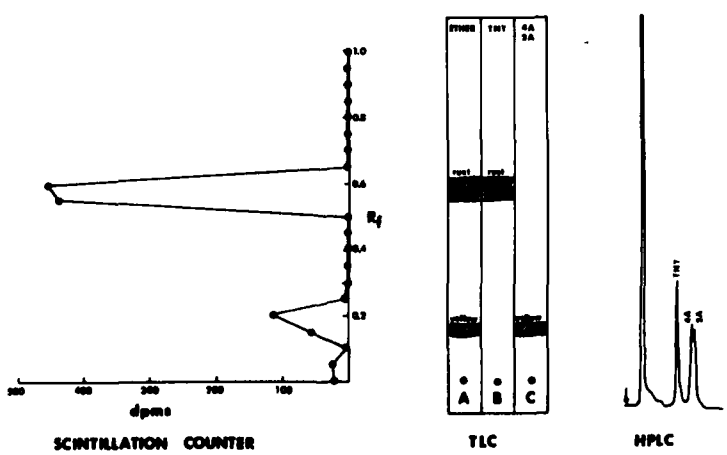


Figure 4. Characterization of solvent extracts from test compost.

by TLC, HPLC, scintillation counting and FTIR analysis (Figures 4,5). The FTIR analysis indicated 4A accounted for the majority of the two amines (Figure 5). After 91 days TNT, 2A, 2,4DA, 2,6DA, 4,4'Az, and 2,4'Az were identified in the solvent extracts (Table 2). The ether fractions contained the more nonpolar metabolites while the ethanol and acetone extracts contained the polar metabolites.

Table 2. TNT and reduction products identified in solvent extracts from compost incubated 91 days with $^{14}C$-labelled TNT.

| | Analytical Method | | |
|---|---|---|---|
| Solvent | HPLC | TLC | Scintillation Counting |
| ether | TNT<br>2A<br>4A<br>4,4'Az<br>2,4'Az | TNT<br>2A or<br>4A<br>4,4'Az or<br>2,2'Az or<br>2,4'Az | TNT or<br>2A or<br>4A or<br>2,4DA or<br>2,6DA |
| ethanol (absolute) | 2,6DA<br>2,4DA<br>TNT | 2A or<br>4A or<br>2,4DA or<br>2,6DA<br>TNT | TNT or<br>2A or<br>4A or<br>2,4DA or<br>2,6DA |
| water | - | - | traces |
| acetone | 2A<br>4A<br>2,6DA | 2A or<br>4A or<br>2,6DA or<br>2,4DA | 2A or<br>4A or<br>2,6DA or<br>2,4DA |

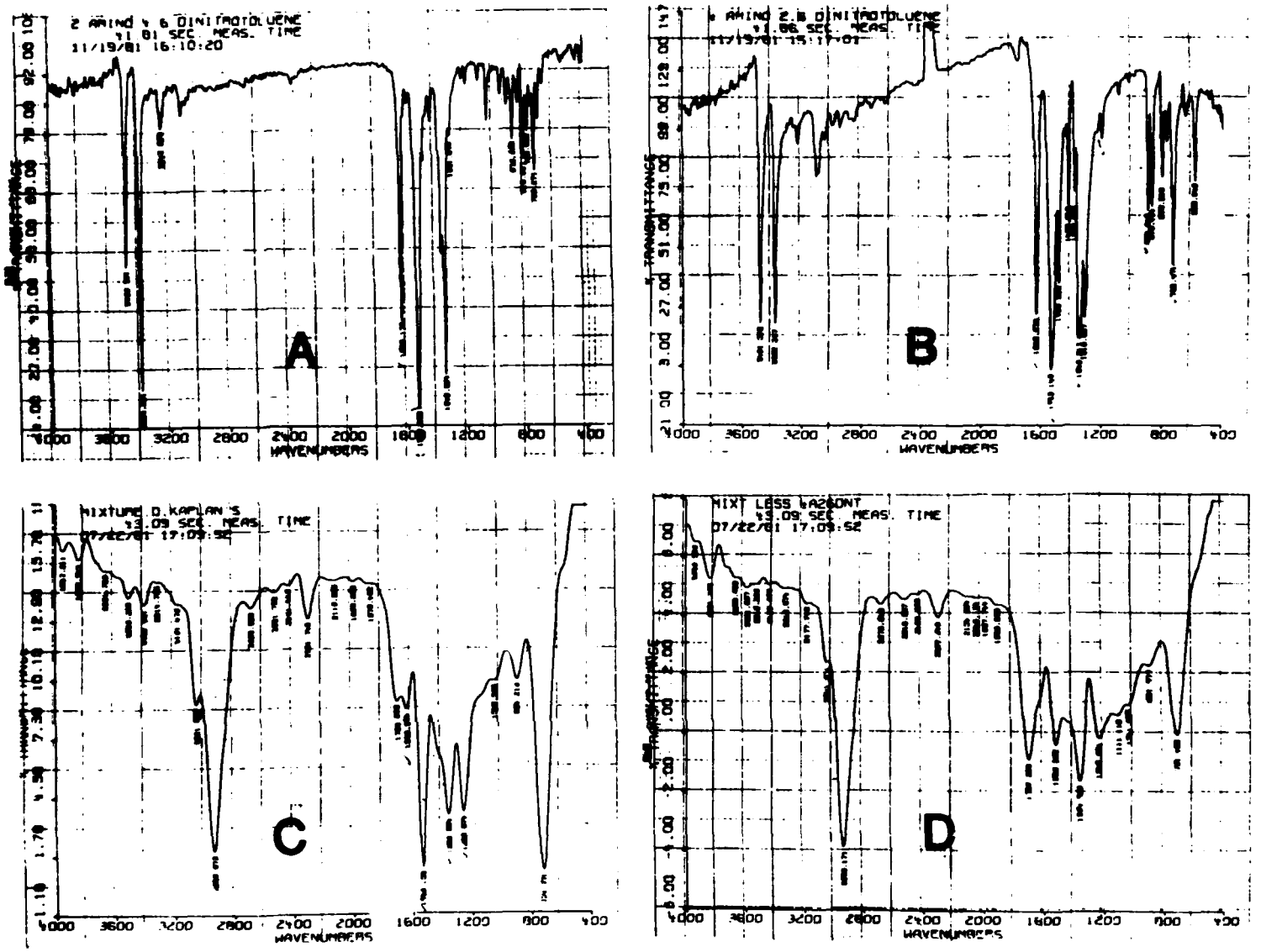


Figure 5. Fourier transform infrared spectroscopic tracings of (A) 2A, (B) 4A, (C) sample mixture ether extract, and (D) subtraction of 4A from C.

Organic Matter Fractionation: The insoluble material which remained after solvent extraction was separated into three organic matter fractions, humic acid, fulvic acid, and humin. The dry weights of these fractions are presented in Table 3. The radioactivity recovered in these three fractions accounted for 5.7 and 22.1% of the total recovered after 25 and 91 days of composting, respectively (Table 4). The majority of the counts were associated with the humic acid and humin fractions.

Isolation of Thermophilic Microorganisms: Thermophilic bacteria, actinomycetes and fungi were isolated from the control and test composts. The bacteria isolated at 55°C included *Bacillus stearothermophilus* Donk, *B. subtilis* Cohn and *B. coagulans* Hammer. These were indentified in both systems. A number of other *Bacillus* isolates were obtained as well as a number of different actinomycetes which were not identified. The fungus *Thermomyces languinosa* Tsiklinskaya was identified in both the test and control composts.

## DISCUSSION

A significant percentage of $^{14}C$-labelled material was found in the organic matter fractions after solvent extraction. This bound or unextractable material increased from 5.7 to 22.1% in compost aged 24 to 91 days, respectively. The humic acid and humin fractions account for this increase. The radioactivity associated with the fulvic acid fraction may be a low figure because some of the lower MW fulvic acids were probably lost during the dialysis. The humin fraction may also contain higher MW insoluble TNT conjugates[22] which would have been insoluble when subjected to the extraction scheme utilized in Figure 2.

[22] See footnote 14, p.8

Table 3. Dry weights of compost fractions.

| Fraction | total dry weight (% of original) 24 day compost | 91 day compost |
|---|---|---|
| Humic Acid | 5.634 ( 5.0) | 9.136 ( 8.1) |
| Fulvic Acid | 0.863 ( 0.8) | 0.540 ( 0.5) |
| Humin | 70.599 (63.0) | 75.354 (67.3) |
| Totals | 77.096 (68.8) | 85.030 (75.9) |

[1]initial dry weight = 112 g.

Table 4. Organic matter fractions from test compost.

| Fraction | dpms recovered (% of total) 24 day compost | 91 day compost |
|---|---|---|
| Humic Acid | 149,851 (4.0) | 292,166 ( 7.8) |
| Fulvic Acid | 14,372 (0.4) | 14,866 ( 0.4) |
| Humin | 47,301 (1.3) | 519,941 (13.9) |
| Totals | 211,524 (5.7) | 826,973 (22.1) |

[1]$3.75 \times 10^6$ dpm initial

These findings indicate a progressive change in the compost system in which microbially produced TNT transformation products are gradually bound up or conjugated into the organic matter fractions, becoming inaccessible to extracting solvents. There is a progressively greater percentage of this material undergoing this route as the compost curing or stabilization process proceeds. Similar processes may occur with TNT in soil as well, as has been reported for the fate of various pesticides. [23,24,25]

Once the compounds become bound or conjugated they are not detectable by standard analytical methods. This is probably responsible for the inability to detect traces of TNT transformation products in the unlabelled cured compost. Using radioactive tracers, the fate of TNT was followed. Recently developed methods, such as $^{13}C$-Nuclear Magnetic Resonance Spectroscopy after oxidation of the organic matter fractions into lower MW fragments, could also be used in an attempt to detect traces of these compounds.

Environmental requirements for these lab-scale composting systems simulated environmental requirements for maximizing thermophilic activity. Nevertheless, the organic matter was metabolized slowly in comparison to large-scale systems. In this connection Osmon and Andrews[26] also found extended periods of incubation were necessary in 1.0-gm mini-composting systems due to low levels of microbial activity.

[23] Bartha, R. and T. Hsu. 1974. Interaction of pesticide-derived chloroaniline residues with soil organic matter. Soil Sci. 115: 444-452.

[24] Stevenson, F. J. 1976. Organic matter reactions involving pesticides in soil. pp. 180-207. In Kaufman, D. D., G. G. Still, G. D. Paulson and S. K. Bondal (eds). Bound and Conjugated Pesticide Residues. Am. Chem. Soc. Symp. Ser. 29. Am. Chem. Soc., Washington, DC.

[25] Bollag, J. M., P. Blattmann and T. Laanio. 1978. Adsorption and transformation of four substituted anilines in soil. J. Agric. Food Chem. 26: 1302-1306.

[26] See footnote 8, p. 6

The isolation of thermophilic bacteria, actinomycetes and a hyphomycete from both the test and control composting systems indicates that TNT was not toxic to these organisms at 1.5% concentrations and that thermophiles were responsible for the biotransformations of TNT. The absence of *Aspergillus fumigatus* Fres. in our systems, a fungus typically found in open air composting piles,[27] is most likely due to the 55°C incubation temperature, which is above the 50°C growth maximum for this thermotolerant fungus.[28] This condition inhibits the growth of many thermotolerant microorganisms which can grow at or below 50°C, and this may in part account for the lower microbial activity and slower rates of decomposition as discussed previously.

The metabolic products identified in the solvent extracts from the 91-day old compost can be assembled into the biotransformation scheme presented in Figure 6. This pathway is similar to that previously reported for mesophilic systems.[29] These findings indicate there are no significant differences in the primary biotransformations of TNT by thermophilic microorganisms compared with those by mesophilic organisms. The aromatic ring is not cleaved and the nitro groups are reduced to amino groups. The hydroxylamino intermediates can also couple to form azoxy compounds. The reduction in the para or 4 position of TNT is preferred to the ortho or 2 position. This was supported by FTIR analysis and also the abundance of the 4,4'Az compound, the presence of 2,4'Az, and the inability to detect 2,2'Az in the solvent extracts. However, under

[27] Millner, P. D., D. A. Bassett and P. B. March. 1980. Dispersal of *Aspergillus fumigatus* from sewage sludge compost piles subject to mechanical agitation in open air. Appl. Environ. Microbiol. 39(5): 1000-1009.

[28] See footnote 21 p. 13.

[29] McCormick, N. G., F. E. Feeherry and H. S. Levinson. 1976. Microbial transformation of 2,4,6-trinitrotoluene and other nitroaromatic compounds. Appl. Environ. Microbiol. 31: 949-958.

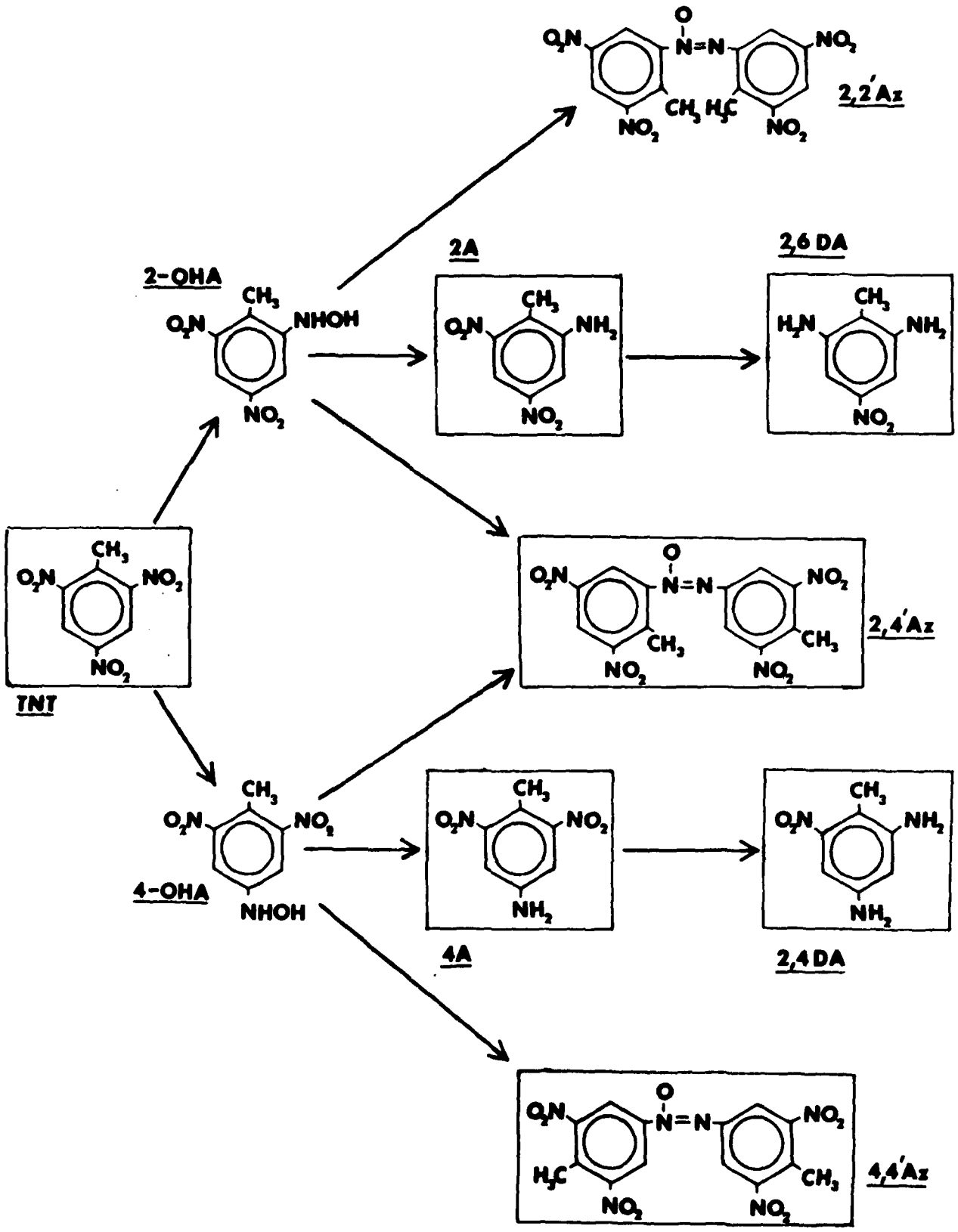


Figure 6. Biotransformation scheme for TNT in compost. Isolated products are boxed.

composting conditions, these primary biotransformation products gradually become bound to humus-like materials until in the fully stabilized product they are undetectable.

At this time, it appears that composting generally offers no advantage over traditional microbial treatment systems for the decomposition of TNT. The same primary reduction products are produced and these products present toxicity and mutagencity hazards.[30,31,32,33] However, under composting conditions, at least some of the primary reduction products are incorporated into humus complexes, even at an early stage in the process.

For the future, it will be important to identify changes in toxicity and mutagenicity when TNT or its biotransformation products are bound to the organic matter fractions or conjugated into high MW compounds. It will also be essential to determine the stability of these interactions to chemical, physical, and microbial forces. Once these facts are understood, a final assessment can be made of the use of microorganisms (mesophilic or thermophilic) for the treatment of TNT wastes in soil, water, and composting systems. The characterization of

[30] Won, W. D., L. H. Disalvo and J. Ng. 1976. Toxicity and mutagenicity of 2,4,6-trinitrotoluene and its microbial metabolites. Appl. Environ. Microbiol. 31: 576-580.

[31] Ellis, H. V., J. R. Hodgson, S. W. Hwang, L. M. Halfpap, D. O. Helton, B. S. Anderson, D. L. VanGoethem and C. C. Lee. 1978. Mammalian toxicity of munitions compounds phase I: acute irritation, dermal sensitization, disposition and metabolism, and Ames tests of additional compounds. Project No. 3900-B, Midwest Res. Inst., Kansas City, MO 39pp.

[32] Dilley, J. V., C. A. Tyson and G. W. Newell. 1979. Mammalian toxicological evaluation of TNT wastewaters. V.III. Acute and subacute mammalian toxicity condensate water. Stanford Res. Inst., Menlo Park, CA.

[33] Kaplan, D. L. and A. M. Kaplan. 1982. Mutagenicity of TNT-surfactnat complexes. Bull. Environ. Contam. Toxicol. 28:33-38

these conjugates is necessary for this final evaluation.

Klausmeier and Jamison[34] investigated the toxicity of TNT-containing compost extracts with seed germination, fish, and Ames testing. The findings were inconclusive as dimethylsulfoxide extracts tested positive for mutagenicity in the Ames test. They were unable to trace the TNT biotransformation products during the composting process.

[34] Klausmeier, R. E. and E. I. Jamison. 1982. Composting of TNT: Airborne products and Toxicity, Naval Weapons Support Center, Crane, IN AD-E400 774.

## CONCLUSIONS

The use of composting to alleviate pollution hazards from TNT-waste appears to offer no advantage over conventional biological treatment systems with regard to the biochemical transformation products of TNT that are formed. These products pose environmental problems as mutational and toxicological hazards. The binding of some of these materials into the humus fractions requires further investigation in order to assess the environmental impact of these products. Work in this area is being continued under project 23214139000, W-1.

This document reports research undertaken at the US Army Natick Research and Development Command and has been assigned No. NATICK/TR-82/015 in the series of reports approved for publication.

## LITERATURE CITED


Alpert, J. E. and E. Epstein. 1981. Composting industrial wastes. Com. Sci. Land Util. Sept/Oct 23-25.

Bartha, R. and T. Hsu. 1974. Interaction of pesticide-derived chloroaniline residues with soil organic matter. Soil Sci. 115: 444-452.

Bollag, J. M., P. Blattmann and T. Laanio. 1978. Adsorption and transformation of four substituted anilines in soil. J. Agric. Food Chem. 26: 1302-1306.

Breed, R. S., E. G. D. Murray and N. R. Smith. 1957. Bergey's manual of determinative bacteriology. Seventh Ed. Williams and Wilkins Co., Baltimore, MD.

Carpenter, D. F., N. G. McCormick, J. H. Cornell and A. M. Kaplan. 1978. Microbial transformation of $^{14}C$-labelled 2,4,6-trinitrotoluene in an activated-sludge system. Appl. Environ. Microbiol. 35(5): 949-954.

Cooney, D. G. and R. Emerson. 1964. Thermophilic Fungi. W. H. Freeman and Co., San Francisco, London.

Dilley, J. V., C. A. Tyson and G. W. Newell. 1979. Mammalian Toxicological evaluation of TNT wastewaters. V.III.. Acute and subacute mammalian toxicity condensate water. SRI International, Menlo Park, CA.

Ellis, H. V., J. R. Hodgson, S. W. Husang, L. M. Halfpap, D. O. Helton, B. S. Anderson, D. L. VanGoethem and C. C. Lee. 1978. Mammalian toxicity of munitions compounds phase I: Acute irritation, dermal sensitization, disposition and metabolism, and Ames tests of additional compounds. Project No. 3900-B, Midwest Res. Inst., Kansas City, MO 39pp.

Epstein, E., G. B. Willson, W. D. Burge, D. C. Mullen and N. K. Enkiri. 1976. A forced aeration system for composting wastewater sludge. J. Water Poll. Control Fed. 48: 688-694.

Finstein, M. S. 1980. Composting microbial ecosystem: Implications for process design and control. Comp. Sci. Land Util. July/August 25-39.

Finstein, M. S., J. Cirello, D. J. Suler, M. L. Morris and P. F. Strom. 1980. Microbial ecosystems responsible for anaerobic digestion and composting. J. Water Poll. Control Fed. 52(11): 2675-2685.

Gerhardt, P. 1981. Manual of methods for general bacteriology. Am. Soc. for Microbiol. Washington, DC.

Gordon, R. E., W. C. Haynes and C. H. Pang. 1973. The Genus Bacillus. Agriculture Handbook No. 427. Agric. Res. Ser. U. S. Dept. Agric. Washington, DC.

Kaplan, D. L. and A. M. Kaplan. 1982. Separation of mixtures of 2,4,6-trinitrotoluene reduction products with liquid chromatography. Anal. Chim. Acta. In Press.

Kaplan, D. L. and A. M. Kaplan. 1982. 2,4,6-trinitrotoluene-surfactant complexes: decomposition, mutagenicity and soil leaching studies. U.S. Army Natick R&D Labs. NATICK/TR-82/006 Natick, MA 01760

Kaplan, D. L. and A. M. Kaplan. 1982. Mutagenicity of TNT-surfactant complexes. Bull. Environ. Contam. Toxicol. 28:33-38.

Klausmeier, R. E. and E. I. Jamison. 1982. Composting of TNT: Airborne products and Toxicity, Naval Weapons Suppost Center, Crane, IN, AD-E400 774.

Koronova, M. M. and N. P. Bel'chikova. 1961. Quick methods of determining the humus composition of mineral soils. Trans. in Soviet Soil Sci. 1112-1121. (1960 Pochvovedenlye 11:1149).

MacGregor, S. T., F. C. Miller, K. M. Psarianos and M. S. Finstein. 1981. Composting process control based on interaction between microbial heat output and temperature. Appl. Environ. Microbiol. 41(6): 1321-1330.

McCormick, N. G., F. E. Feeherry and H. S. Levinson. 1976. Microbial transformation of 2,4,6-trinitrotoluene and other nitroaromatic compounds. Appl. Environ. Microbiol. 31: 949-958.

Millner, P. D., D. A. Bassett and P. B. March. 1980. Dispersal of Aspergillus fumigatus from sewage sludge compost piles subjected to mechanical agitation in open air. Appl. Environ. Microbiol. 39(5): 1000-1009.

Osmon, J. L. and C. C. Andrews. 1978. The biodegradation of TNT in enhanced soil and compost systems. U. S. Army Armament Research and Development Command ARLCD-TR-77032. Dover, NJ. NTIS, ADE400073.

Sitzmann, M. E. 1973. Chemical reduction of 2,4,6-trinitrotoluene (TNT) initial products. NTIS, AD-764060. 1-9.

Stevenson, F. J. 1965. Gross chemical fractionation of organic matter. p. 1409-1421. In C. A. Black (ed.) Methods of soil analysis pt. 2. American Society of Agronomy, Inc., Madison, WI.

Stevenson, F. J. 1976. Organic matter reactions involving pesticides in soil. p. 180-207. In Kaufman, D. D., G. G. Still, G. D. Paulson and S. K. Bondal (eds.) Bound and Conjugated Pesticide Residues. Am. Chem. Soc. Symposium Ser. 29. Am. Chem. Soc., Washington, DC.

Strom, P. F., M. L. Morris and M. S. Finstein. 1980. Leaf composting through appropriate, low-level technology. Comp. Sci. Land Util. Nov/Dec 44-48.

Suler, D. J. and M. S. Finstein. 1977. Effect of temperature, aeration, and moisture on $CO_2$ formation in bench scale, continuously thermophilic composting of solid waste. Appl. and Environ. Microbiol. 345-350.

Sutherland, I. W. and J. F. Wilkinson. 1971. Chemical extraction methods in microbial cells. p345-383. In J. R. Norris and D. W. Ribbons (eds.), Methods in Microbiology, vol. 5B. Academic Press Inc., New York.

Won, W. D., L. H. Disalvo and J. Ng. 1976. Toxicity and mutagenicity of 2,4,6-trinitrotoluene and its microbial metabolites. Appl. Environ. Microbiol. 31: 576-580.