AD-A109 510 NAVAL OCEAN SYSTEMS CENTER SAN DIEGO CA F/G 6/7
PROJECT SEA HUNT: A REPORT ON PROTOTYPE DEVELOPMENT AND TESTS.(U)
JUL 81 J V SIMMONS
UNCLASSIFIED NOSC/TR-746 NL

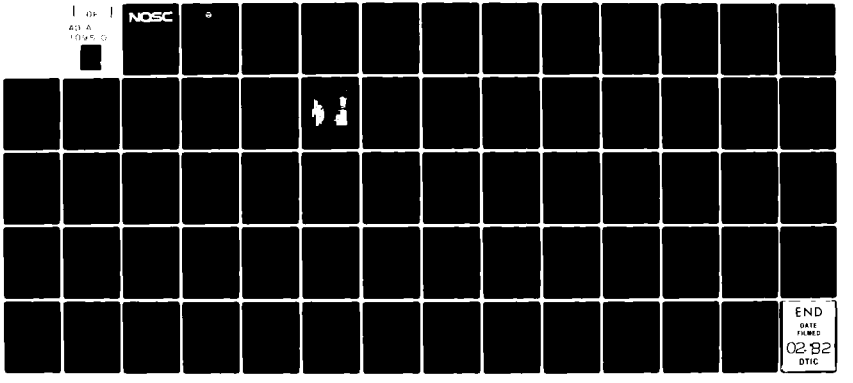

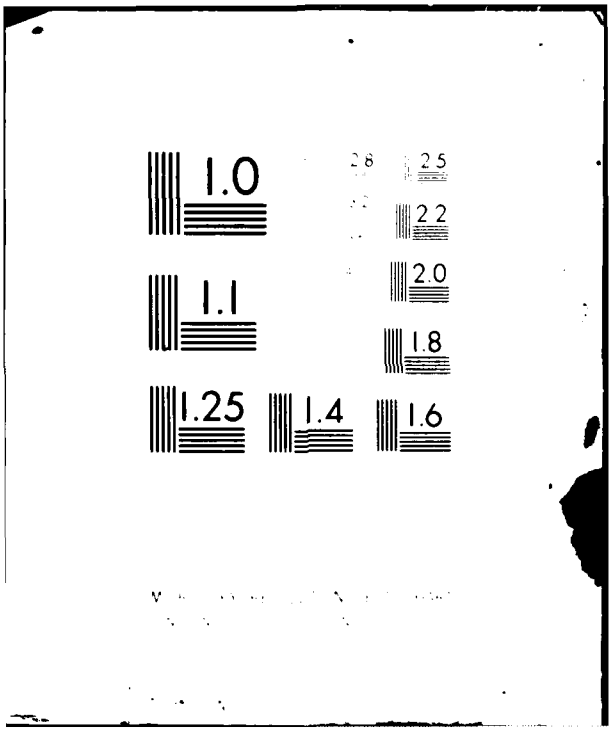
1.0
2.8
2.5
2.2
2.0
1.1
1.8
1.25
1.4
1.6

LEVEL II (12)

# NOSC

AD A109510

NOSC TR 746

NOSC TR 746

**Technical Report 746**

# PROJECT SEA HUNT: A REPORT ON PROTOTYPE DEVELOPMENT AND TESTS

DTIC
ELECTE
JAN 11 1982
E

JV Simmons, Jr

July 1981

Prepared for
US Coast Guard

DTIC FILE COPY

Approved for public release; distribution unlimited

NAVAL OCEAN SYSTEMS CENTER
SAN DIEGO, CALIFORNIA 92152

82 01 11 150

NAVAL OCEAN SYSTEMS CENTER, SAN DIEGO, CA 92152

AN ACTIVITY OF THE NAVAL MATERIAL COMMAND

SL GUILLE, CAPT, USN
Commander

HL BLOOD
Technical Director

## ADMINISTRATIVE INFORMATION

The work reported on herein was sponsored by the U.S. Coast Guard Office of Research and Development, Division of Sensor Technology.

Special thanks are due the personnel of the U.S. Coast Guard Air Station, Barbers Point, Hawaii. Their enthusiastic, dedicated participation in providing flight time and engineering support was a significant contribution.

Likewise, the personnel of the Station Operations and Maintenance Squadron, Marine Corps Air Station, Kaneohe Bay, Hawaii are due our sincere appreciation for the flight time provided during their involvement with the development and testing of Sea Hunt. Their participation was invaluable.

The author also wishes to express gratitude to those persons within NOSC who have provided guidance, encouragement, support and labor during the development of Sea Hunt.

Gratitude is also extended to Helen Goodhue, Captain James Osborne, LT Greg Westrup, LT COL John Alexander and John Tokunaga for their generous and wise contributions.

Released by
JM Stallard, Head
Bioacoustics & Bionics Division

Under authority of
HO Porter, Head
Biosciences Department

UNCLASSIFIED

SECURITY CLASSIFICATION OF THIS PAGE *(When Data Entered)*

| REPORT DOCUMENTATION PAGE | | READ INSTRUCTIONS BEFORE COMPLETING FORM |
|---|---|---|
| 1. REPORT NUMBER<br>NOSC Technical Report 746 (TR 746) | 2. GOVT ACCESSION NO.<br>AD-A109 510 | 3. RECIPIENT'S CATALOG NUMBER |
| 4. TITLE *(and Subtitle)*<br>PROJECT SEA HUNT: A REPORT ON PROTOTYPE DEVELOPMENT AND TESTS | | 5. TYPE OF REPORT & PERIOD COVERED<br>Final: FY 79-80<br>6. PERFORMING ORG. REPORT NUMBER |
| 7. AUTHOR*(s)*<br>JV Simmons, Jr | | 8. CONTRACT OR GRANT NUMBER*(s)* |
| 9. PERFORMING ORGANIZATION NAME AND ADDRESS<br>Naval Ocean Systems Center, Hawaii Laboratory<br>P. O. Box 997<br>Kailua, Hawaii 96734 | | 10. PROGRAM ELEMENT, PROJECT, TASK AREA & WORK UNIT NUMBERS<br>FGOV; USCG; 0; 512-MT16 |
| 11. CONTROLLING OFFICE NAME AND ADDRESS<br>Heaquarters (DST2/TP54)<br>U. S. Coast Guard<br>Washington, D.C. 20590 | | 12. REPORT DATE<br>July 1981<br>13. NUMBER OF PAGES<br>68 |
| 14. MONITORING AGENCY NAME & ADDRESS*(if different from Controlling Office)* | | 15. SECURITY CLASS. *(of this report)*<br>Unclassified<br>15a. DECLASSIFICATION DOWNGRADING SCHEDULE |

16. DISTRIBUTION STATEMENT *(of this Report)*

Approved for public release; distribution unlimited

17. DISTRIBUTION STATEMENT *(of the abstract entered in Block 20, if different from Report)*

18. SUPPLEMENTARY NOTES

19. KEY WORDS *(Continue on reverse side if necessary and identify by block number)*

Operant conditioning
Pigeon
Search and rescue
Vision

20. ABSTRACT *(Continue on reverse side if necessary and identify by block number)*

During FY 79-80, a prototype Sea Hunt system was built and tested. Sea Hunt utilizes trained pigeons carried in a container attached to the underside of a helicopter to locate objects colored red, yellow or orange. Development of hardware and pigeon training methods are presented. Conclusions based on test data are: (a) Sea Hunt improves detection and localization of appropriate targets; (b) the system is reliable and easily serviced and maintained. A recommendation is made to conduct operational field testing of Sea Hunt at a Coast Guard air station.

DD FORM 1 JAN 73 1473 EDITION OF 1 NOV 65 IS OBSOLETE

S N 0102-LF-014-6601

UNCLASSIFIED

SECURITY CLASSIFICATION OF THIS PAGE *(When Data Entered)*

## CONTENTS


INTRODUCTION . . . page 1
- Background . . . 1
- Scope of Effort . . . 1

METHODS AND MATERIALS . . . 1
- Equipment Development . . . 2
  - Basic Training Equipment . . . 2
    - Training Chamber . . . 2
    - Control Circuits . . . 2
    - Target Mechanism . . . 2
  - Helicopter Equipment: Observation Container . . . 2
    - Requirements . . . 2
    - Approach . . . 2
  - Helicopter Equipment: Control/Display Panel . . . 3
    - Requirements . . . 3
    - Approach . . . 3
- Pigeon Training Procedures . . . 3
  - Subject Selection and Maintenance . . . 3
  - Basic Training . . . 3
    - Requirements . . . 3
    - Approach: Training Methods . . . 4
  - Advanced Training . . . 5
    - General Procedures . . . 5
    - Transfer Training . . . 8
    - Target-Absent Procedures . . . 8
    - Target-Present Procedures . . . 8
- Test Procedures . . . 9
  - Search Tests . . . 9
  - Support Tests . . . 10

RESULTS . . . 10
- *Equipment Development . . . 10*
  - Helicopter Observation Container . . . 10
  - Helicopter Control/Display Panel . . . 10
- Pigeon Training . . . 12
- Systems Test . . . 14
  - Search Test . . . 14
  - Support Test . . . 15

DISCUSSION . . . 18

CONCLUSIONS . . . 19

RECOMMENDATIONS . . . 19

REFERENCES . . . 19


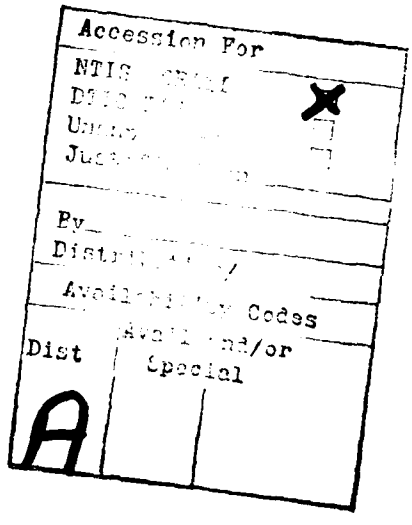

## CONTENTS (Continued)

APPENDIX A: METHOD OF CONTROLLING DAILY BODY WEIGHT IN THE PIGEON . . . page A-1

APPENDIX B: LEVEL II DRAWINGS . . . B-1

APPENDIX C: SCHEDULES . . . C-1

APPENDIX D: DETECTION CRITERIA . . . D-1

APPENDIX E: TRAINING RATES FOR INDIVIDUAL SUBJECTS . . . E-1

## FIGURES

1. Training flow chart for each trial of a training session . . . page 6
2. Test and training areas . . . 7
3. Flight equipment . . . 11

## TABLES

1. Basic training requirements . . . page 4
2. Pigeon training acquisition of behavior . . . 13
3. Test results . . . 16
4. Performance by target type . . . 17
5. Summarized performance data . . . 17
6. Criteria for a behavioral failure . . . 17
7. Animal failure data . . . 18
8. Maintenance hours per flight hour of test . . . 18

## OBJECTIVE

Develop and test a prototype of the Sea Hunt system. Determine the performance of the system in daylight, overwater searches for objects colored red, yellow, or orange. Determine the support requirements for the prototype system.

## RESULTS

1. The probability of detection for the prototype system and helicopter crews for appropriate targets was determined to be about 85 percent for Sea Hunt and about 50 percent for the helicopter crews. Reliability of the system was found acceptable, with two system failures preventing use of the system on a search out of a total 13 test days.

2. Support tests indicated the prototype system was quickly repaired: 2.7 hours of maintenance per flight hour.

## RECOMMENDATIONS

1. Develop a simulation device so as to control adequately the stimulus environment during animal behavior maintenance.

2. Conduct operational tests of the prototype system at a U.S. Coast Guard air station.

3. Reconfigure the hardware to attach to the Coast Guard's new search and rescue helicopter.

# INTRODUCTION

## BACKGROUND

Project Sea Hunt is a Coast Guard effort examining the use of trained pigeons to improve the effectivensss and efficiency of daylight searches.

Search and rescue helicopter crews often must search vast expanses of the ocean, looking for lost objects or personnel. Limited fields of view and optical problems such as sun glare make objects on the ocean surface difficult to see. Search effectiveness is reduced further by competing duties (i.e., flying and navigating the aircraft) and the loss of concentration with time. Additional sensor systems could offer significant assistance.

Experiments show that pigeons have a visual system capable of high search rates, and remain vigilant to complex visual tasks for many hours (references 1-15). Pigeons are highly adaptive, easy to train and to maintain, and have a life expectancy of more than 10 years.

Research in 1977 and 1978 demonstrated that pigeons can perform the ocean searches better than the crew flying the helicopter, with the probability of detection improving from about 40 percent for the helicopter crew to about 90 percent for Sea Hunt (reference 16).

In the Sea Hunt system, three trained pigeons are carried in a container attached to the underside of a helicopter. The pigeons are placed approximately 120 degrees apart: at the 10-, 2- and 6-o'clock positions. When a pigeon sees a red, yellow or orange object, it pecks on a key closing a switch. The pecking activates an indicator light at a control panel in the helicopter. With this information, the crew concentrates its search until the target is located.

The performance of the pigeons was found to be reliable throughout the duration of the test flights, some of which lasted longer than 3 hours.

The Sea Hunt system also integrated effectively with search helicopters and procedures. The helicopter crews determined the system to be a valuable aid (references 17-20).

On a Coast Guard search in February 1979 for five men lost in a small boat in Hawaiian waters, the Sea Hunt system demonstrated operational utility on three sorties (reference 16).

## SCOPE OF EFFORT

During FY-79 and FY-80, Sea Hunt was developed further. Another set of birds was trained and improved hardware was built. This report discusses those efforts.

# METHODS AND MATERIALS

Prototype development of Sea Hunt was divided into three units of effort: equipment development, pigeon training and systems tests.

---

Note: All references are listed on pages 19 through 21.

## EQUIPMENT DEVELOPMENT

Sea Hunt equipment consisted of two systems. The ground-based training equipment was used for basic pigeon training. Advanced pigeon training and operational searches used helicopter-borne equipment consisting of an observation container and a control/display panel for the operator. The requirements which guided prototype development of the helicopter-borne equipment are presented in the following sections. These requirements were formulated by the project manager based on previous Sea Hunt efforts and discussions with Coast Guard personnel.

### Basic Training Equipment

Basic training equipment included a training chamber, a target mechanism and electronic controls. The training chamber and electronic controls were in a trailer adjacent to Kaneohe Bay. The target mechanism was anchored in Kaneohe Bay and was visible from the trailer. This training equipment had been used in 1977–1978 to train the first set of Sea Hunt pigeons (reference 16). The equipment was unchanged from those tests. A brief description follows:

TRAINING CHAMBER. The chamber contained a peck key, a feeder mechanism and a plexiglass window. The chamber shape was similar to any one of the three chambers in the helicopter observation container. The feeder mechanism and the peck key were the same as those in the helicopter observation container.

CONTROL CIRCUITS. The trainer controlled the feeder with a switch. Mechanical counters and a four-channel strip chart recorder collected animal response data. Mechanical clocks were used to preset the reinforcement duration. The trainer used a hand-held stopwatch to control the interval between target presentations. A video camera enabled the trainer to monitor the pigeon, the feeder and the peck key visually during a training session.

TARGET MECHANISM. The target consisted of a 14-inch-square (36-cm-square) orange plate. The trainer controlled exposure of the plate via a 30.12-kHz UHF radio link. The radio signal actuated an electronic motor and exposed the orange plate. The target mechanism was housed in a box mounted to a raft that was anchored in Kaneohe Bay. A window measuring 17 by 24 inches (43.2 by 61.0 cm) was located on one side of the housing. The window side of the target was oriented toward the bird training chamber.

### Helicopter Equipment: Observation Container

This subsystem was the housing from which the pigeons searched.

REQUIREMENTS. The helicopter-borne container system was required to provide means to convey three pigeons, to control their behavior and to interpret their actions into a search direction. The container system was to attach to both Coast Guard H-52 and Marine Corps HH-46 helicopters. The pigeons were to have unobstructed views, about 200 degrees horizontally and 90 degrees vertically. The container system was to weigh less than 66 pounds (30 kg). The system was required to be reliable and serviceable so that it could be used up to five times per week.

APPROACH. The container system was patterned after the basic design described in reference 16. The system would have an improved window, stronger structural bulkheads, more durable decking and stronger attaching mechanisms.

### Helicopter Equipment: Control/Display Panel

The display panel subsystem transferred information about each pigeon's performance to an operator aboard the helicopter during a flight. The panel provided switches for the operator to reinforce each pigeon.

REQUIREMENTS. The subsystem was to use aircraft electrical power without causing interference or interruption to any aircraft system and without requiring modification of the aircraft. The subsystem was to have visual displays for the operator. Switches controlling feeders, power and the displays were to be positioned and designed to reduce errors and to enhance their utility by the operator. The number of cables to the container was limited to two. The panel had to be small, with dimensions less than 16 inches (40.6 cm) in length, 8 inches (20.3 cm) in height, and 10 inches (25.4 cm) in width. The weight had to be less than 11 pounds (5 kg). A reliable and serviceable system was required. The failure rate had to be less than one failure per 25 flight hours. Repairs had to take less than an average of 2 hours per failure.

APPROACH. A solid-state electronic system was designed and packaged in a shoebox-sized metal container. Easy, quick interpretation and use of the panel by the operator was emphasized. The ergonometric recommendations outlined in references 21 and 22 were followed. Modular components were used to reduce service and diagnostic time in the event of a failure.

## PIGEON TRAINING PROCEDURES

Pigeons were trained in two stages: basic and advanced. The techniques used for selecting and maintaining subjects during training, behavior performance requirements and training methods are presented in the following paragraphs.

### Subject Selection and Maintenance

Eight adult pigeons (*Columba livia*) were selected. Selection was based on health and behavior during training. The birds were banded and assigned numbers. Three of these birds (10, 250 and 251) were selected for advanced training. The pigeons were maintained at approximately 80 percent of their free feeding weights. This weight has been found to maintain motivation for food without causing harm to the animal (references 6 and 23). The birds' weights were adjusted up or down from the 80-percent weight depending on their performance during training. The adjusted weights then became the desired training weights. The pigeons received most of their food during training. If necessary, additional food was supplied to maintain a bird's training weight. The method used to maintain their desired training weights is presented in appendix A.

### Basic Training

REQUIREMENTS. In order to complete basic training, each pigeon's behavior had to meet or exceed performance requirements for target-absent and target-present conditions during specified environmental criteria. Table 1 lists these requirements.

A false alarm was defined as the condition when a bird's peck rate exceeded 0.5 responses per second over any 8 seconds in the absense of a target.

**TARGET PRESENT BEHAVIORAL REQUIREMENTS**

1. Respond to target within 10 seconds.
2. Detect greater than 90 percent of the targets.
3. Greater than 0.5 responses/second within 8 seconds of the first response.
4. Respond at an average rate exceeding 0.5 responses per second for at least 100 responses.

**TARGET ABSENT BEHAVIORAL REQUIREMENTS**

1. Average false alarm rate less than one per hour of training.

**ENVIRONMENTAL CRITERIA**

1. Target distance: greater than 650 metres.
2. Simulated helicopter noise levels: greater than 100 dB (ref 20 $\mu N/m^2$).
3. Work time for each session: greater than 2 hours.
4. Target average presentation interval: greater than 16 minutes.
5. Target maximum presentation interval: greater than 75 minutes.

Table 1. Basic training requirements.

APPROACH: TRAINING METHODS. Operant conditioning techniques developed from procedures described in references 6, 23 and 24 were used.

The primary reinforcer, food (pigeon grain), was presented immediately following desired behavior.

The training had four phases, each of which is described in the following paragraphs:

During Phase I, each pigeon's training weight was established. For short periods, daily during a 2-week span, each pigeon was placed in a harness and carrier (see appendix B) and then in the training chamber. The pigeons received their daily food ration from the feeding mechanism in the training chamber. Through the repeated exposure to these novel events, the birds adapted quickly to the routine.

During Phase II, the pigeons were trained to peck on the response key. Shaping procedures described in references 23 and 24 were used, selectively reinforcing successive approximations with food. After a pigeon learned to peck the key, each response on the key was reinforced with food until the pecking behavior exceeded a rate of 0.25 responses per second. Low variable ratio (less than VR-10) and fixed ratio (less than FR-20) reinforcement schedules (described in references 6 and 24) then were used to reduce the peck behavior's susceptibility to extinction during the next phase of training and to increase the response rate. A discussion of these schedules is presented in appendix C.

During Phase III, the pigeons learned that pecking the key during the presence of an orange plate immediately in front of the training chamber would be reinforced and pecking in the absence of the orange plate would not be reinforced. If a pigeon responded when the plate was absent the next presentation was delayed. Short nonresponding periods were

reinforced, secondarily, by presenting the orange plate. Gradually, the time requirement for nonresponse was increased and a target presentation schedule was begun.

During Phase IV, the requirements for reinforcement were increased gradually. The environmental conditions were brought up gradually to the requirements listed in table 1. The target distance, sound levels and target presentation intervals each were increased slowly. The VR reinforcement schedules were increased to VR-50). Differential reinforcement (selectively presenting reinforcement for desired behavior) was used to maintain or establish low first response latencies after the target was presented. If response rate values during target presentations became low or inconsistent, high response rates were reinforced differentially at the end of the VR schedules.

During Phase IV, each pigeon was trained for a minimum of three sessions per week. Each training session lasted at least 2 hours and contained from zero to six trials, depending upon the target presentation schedule and the pigeon's behavior. Each trial included target-absent and target-present events. Each trial was concluded with reinforcement and or withdrawal of the target. Figure 1 shows a flow chart of the activities occurring during each trial. The end of one trial initiated the onset of the target-absent period of the next trial. Appendix C presents the structure and selection of reinforcement and target presentation schedules.

**Advanced Training**

Marine Corps HH-46A and Coast Guard H-52 helicopters from Kaneohe Marine Corps Air Station and the Coast Guard Air Station, Barbers Point, respectively, were used for advanced pigeon training. The training procedures are described in the following four sections.

GENERAL PROCEDURES. Each pigeon was weighed prior to the start of the session. The observation chamber and control box were installed on the helicopters. The date, time, environmental conditions, and the planned search altitude and speed were recorded. The work areas that were used are indicated in figure 2. A spherical orange float 14 inches (36 cm) in diameter was used as a target because it was visually similar to orange life preservers. The target was attached to a sea anchor to reduce drift. The target had a recovery line for pickup by the helicopter hoist. The target was dropped from the helicopter within the work area. The target's position was noted from electronic navigation aids and geographical sightings. When in a Coast Guard helicopter, the birds were placed in the container before takeoff. When a Marine Corps helicopter was used, the birds were placed in the container after the target was dropped.

Sessions lasted from 1 to 2 hours, and each session was organized into trials. As in basic training, each trial included target-absent and target-present periods. During advanced training, the length of the target-present period depended upon the time required by human observers to locate the target. During each target presentation, the pilot attempted to navigate the helicopter directly over the target. If the target was not seen by a human observer on the first fly-over, the pilots would adjust their flight path on subsequent fly-overs and stay in the target area until the target was located. The number of fly-overs was recorded. Each fly-over was noted as an approach; each trial could contain several approaches to the target. A strip-chart recorder recorded (a) responses of each bird, (b) when the detection criteria were exceeded, and (c) the length and time of reinforcement. The following information also was recorded on a data sheet: (1) the number of responses made by each bird on and between each target presentation; (2) the approach number on each target presentation that the birds and the crew detected the target; (3) misses of the target by the birds and crew; (4) the position of the target when each bird was reinforced; and (5) the position of the target when it was detected by a crew member.

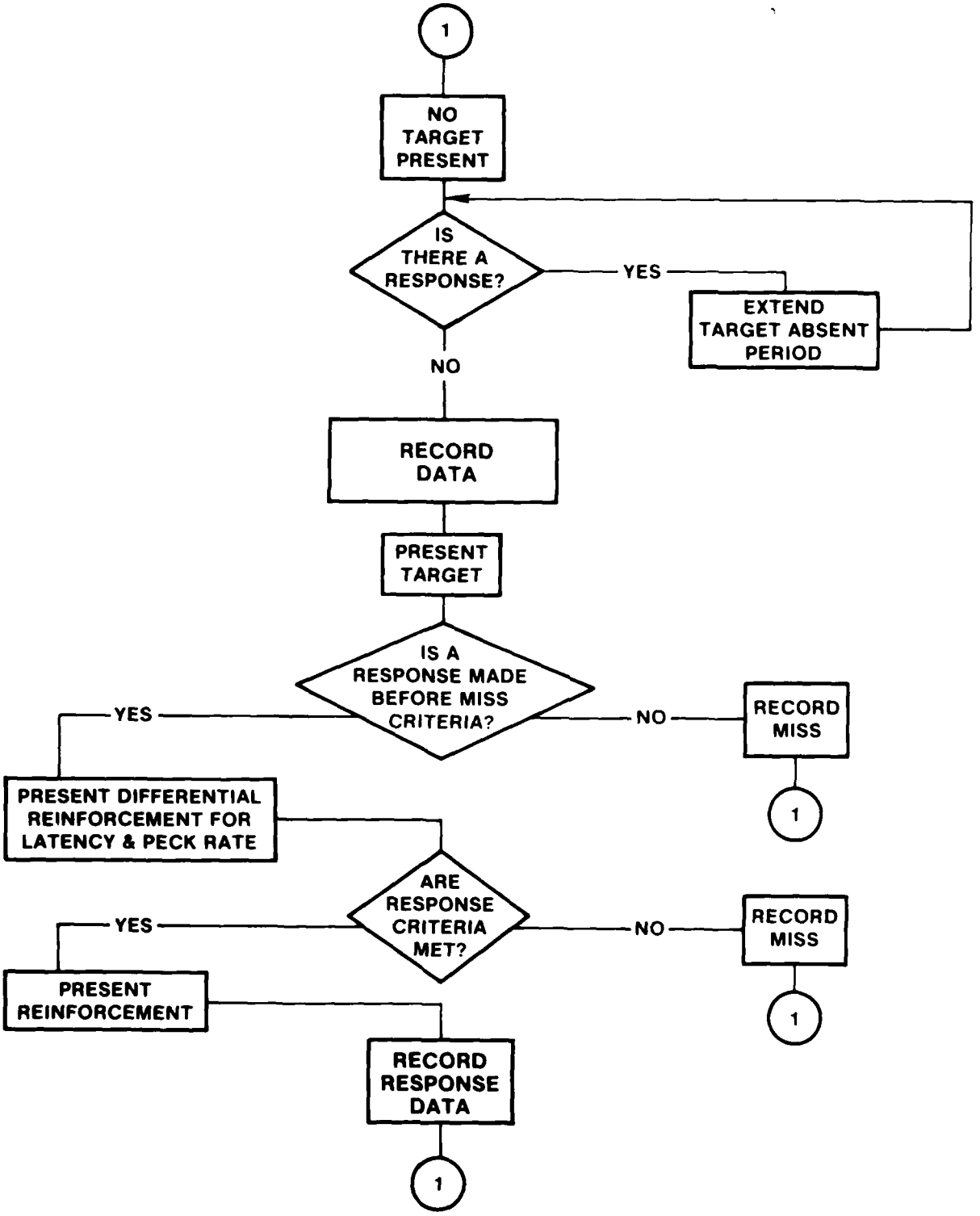


Figure 1. Training flow chart for each trial of a training session.

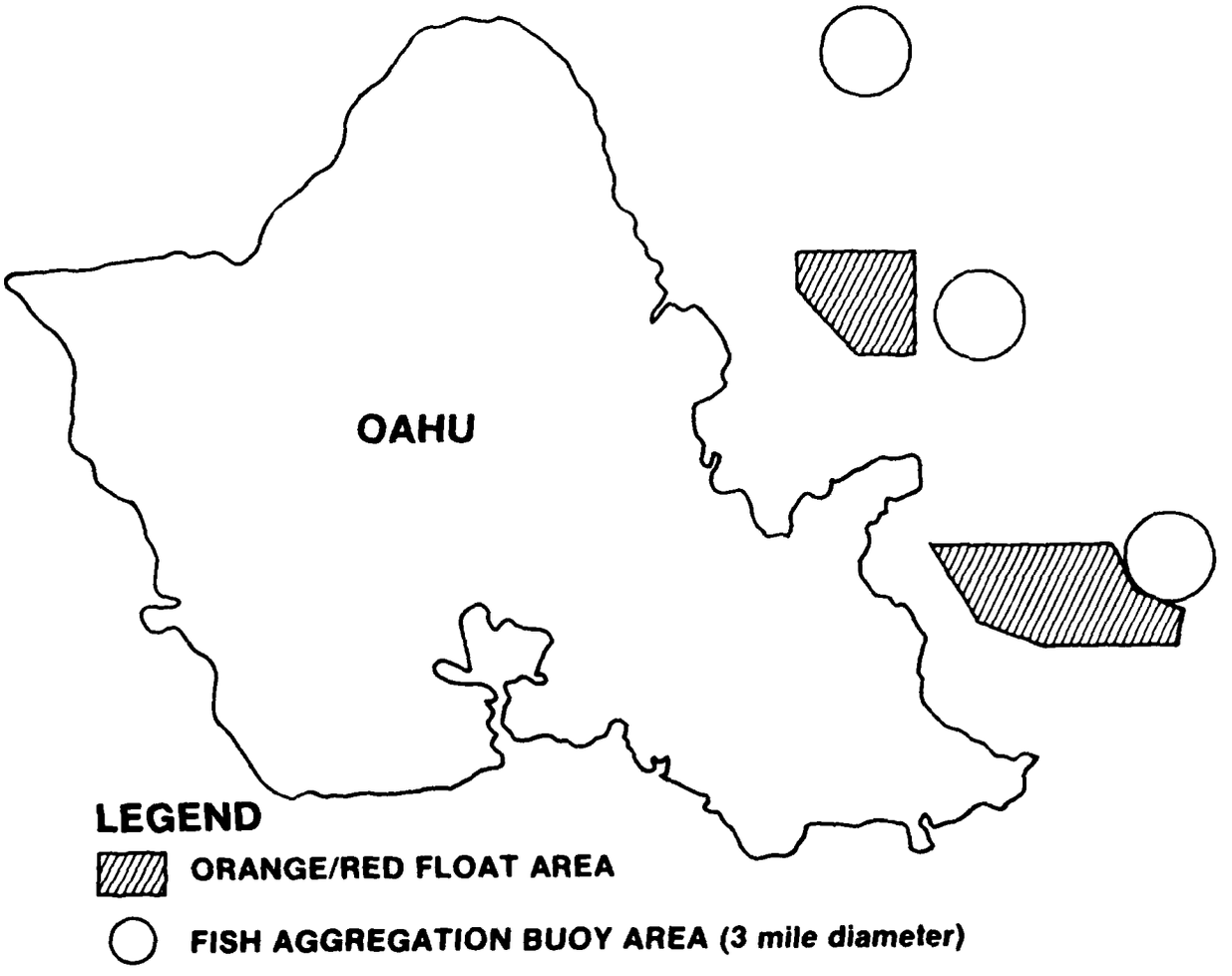


Figure 2. Test and training areas.

Unlike basic training, three birds were trained simultaneously and each bird was trained at least three times a week using either a helicopter or the basic training system.

TRANSFER TRAINING. At the start of advanced training, pecks that were made while the helicopter hovered at about 150 feet high (45 metres) in front of the orange basic training target were reinforced. This process was repeated until the pigeons' behavior approached performance levels observed in basic training. The new, life-preserver-like target then was introduced . The target was put into the ocean in the work area (figure 2). As the helicopter hovered near the target, pecks were reinforced. As the pigeons developed a stable and reliable response rate, the helicopter's altitude was increased to about 250 feet (76 metres), and instead of hovering, the helicopter began flying slowly past the target at less than 30 knots airspeed. At this stage, target-absent and target-present training procedures were implemented.

TARGET-ABSENT PROCEDURES. The target-absent durations were varied from about 2 hours to about 1 minute. During the target-absent intervals, search altitudes and speeds were maintained. Altitudes ranged from about 300 feet (91 metres) to about 1,000 feet (304 metres), and speeds ranged from about 50 knots to about 100 knots. The pilots flew the helicopter over the ocean, avoiding the target area (figure 2). Flight procedures were changed if false-alarm responding occurred in any of the three birds. The target-absent interval was increased by avoiding the target area until false-alarm responding ceased. During some trials nuisance targets were encountered: red, yellow or orange objects other than our target on the surface. The pigeons were not reinforced for responding to nuisance targets because of the flight time required to verify and locate each nuisance target. If, by chance, a crewmember identified a nuisance target, the pigeons' responses were deleted from the false-alarm analysis and were not included in the data as correct detections. Also, false-alarm correction procedures were used during a verified nuisance alarm.

TARGET-PRESENT PROCEDURES. The number of target presentations during a training session varied from zero to five. The interval between presentations was contingent upon the pigeons' behavior during the target-absent and target-present intervals. Intervals varied randomly and without pattern. Flight paths in the target area also varied due to weather, navigational inconsistencies and the skill of the pilots.

Each pigeon was reinforced according to the following contingencies:

(a) The bird was pecking the key at a rate exceeding 0.5 responses per second.

(b) The target was detected by a crew member and was in view of the bird.

Each trial ended with reinforcement for correct behavior. The food was presented until the target was out of the birds' view. Also, within each trial, a pigeon that exceeded the detection criteria (i.e., high rate of responding during the 8 seconds following the first response), or responded at a high rate while the target was in view, or when the target was at a particular position in the field of view, could be reinforced selectively.

If two or more birds failed to respond when the target was in view and had been detected by a crew member, the trial was repeated within 5 minutes. Also, the number of presentations planned for that session was increased. If, on the next trial, two or more birds again failed to respond, the flight speed and altitude of the helicopter were reduced. The trial was not completed until responses occurred and all of the birds were reinforced.

## TEST PROCEDURES

The system was tested from 1 August to 30 September 1980. Systems performance, reliability, serviceability and maintainability were examined.

### Search Tests

Systems performance and reliability data were collected during 13 helicopter searches. The test search format was similar to that used during advanced training. The Station Operations and Maintenance Squadron of the Kaneohe Marine Corps Air Station and the Barbers Point Coast Guard Air Station provided helicopters and crews to conduct the tests.

Two types of targets were used interchangeably during the tests. The first type was a circular float 14 inches (36 cm) in diameter, colored either orange or red. This type of target was dropped from the helicopter. The second target type was a large buoy. Three buoys of this target type were anchored along the east coast of Oahu to attract and aggregate sport fish as part of a program of the Hawaii State Division of Fish and Game (reference 25). The buoys were painted orange, were 71 inches (183 cm) in diameter, and had a freeboard of about 22 inches (56 cm). The spherical red float and the fish aggregation buoys were not used prior to testing, and thus these targets were novel to the pigeons.

Only one target was used during any single helicopter search. Figure 2 shows the area where the red and orange spherical floats were placed and where the fish aggregation buoys were anchored. Because the fish aggregation buoys could be anywhere within the area shown in figure 2, the flight crews had only general information regarding the position of the buoys on any test search. Thus, the helicopter could be flown to and within expected target areas without the crew having particular knowledge of the target's precise position. The helicopter search altitude was about 400 feet (122 metres) and the airspeed was about 70 knots during target-absent and target-present conditions. If the target was not located on the first approach of a trial, a parallel track search method was used. On each trial, the helicopter remained in the target area until a crew member located the target. During each target-present condition, the trainer monitored the helicopter's position within the search area and could verify correct detections by the birds after detection by a crew member. In order to compare the target detection performance (the probability of detection) of the pigeons and the crew, information about pigeon target detections was not transferred to the crew of the helicopter while in the target area.

Target-absent intervals were varied randomly, as in advanced training. Target presentations per test session ranged from zero to five, with a mean of 1.67 targets ($s = 1.23$) presented during each of 12 test sessions.

Data were recorded on a strip chart event recorder and on a clipboard data sheet. The strip-chart recorder recorded the following data automatically for each pigeon: (a) pecks; (b) reinforcement; (c) target detection behavior; and (d) target detection by a crew member. The trainer recorded the following data manually on the clipboard data sheet: (1) date; (2) time of session start and stop; (3) weather; (4) sea state; (5) approach number on each trial that the bird and man detected the target; (6) target position on each trial relative to the nose of the helicopter when the target was detected by a crew member; (7) total number of pecks each pigeon made during the target-present condition; and (8) system or component failures during the session.

Birds 10, 250 and 251 were used during the tests. Birds 10 and 250 were used interchangeably in the left and right forward chambers of the observation container; bird 251 always occupied the aft chamber.

### Support Tests

Serviceability and maintainability requirements were evaluated for the equipment and pigeons. In these tests, serviceability was defined as the mean time required to repair a failure per flight hour. Two measures of maintainability were used: the mean man-hours of maintenance performed per flight hour of the system, and the frequency of animal behavior maintenance.

Procedures for maintenance of the hardware and animal behavior were established and were performed between test flights. These procedures are described in the following paragraphs. The time required to perform the procedures was recorded. Manipulation of the procedures in order to obtain optimum values of maintenance was not performed.

The equipment was inspected and serviced after each flight. The time required, in man-hours, to inspect and service the equipment was noted.

The observation container was checked for correct feeder and peck key operation, loose nuts, corrosion, and damage. The electronic package was inspected for correct operation of the strip-chart event recorder, the visual displays and the switches. After the general inspection, the observation container was cleaned and prepared for the next flight.

The pigeons' behavior was maintained with the basic training equipment. The training hours were recorded.

If a failure occurred in the equipment that could not be repaired during routine maintenance, the man-hours and type of service required for repair were noted. Data from 1 August to 30 September 1980 were recorded.

## RESULTS

## EQUIPMENT DEVELOPMENT

Figure 3 shows the helicopter observation container and the control/display equipment that were developed. The following sections describe the equipment.

### Helicopter Observation Container

The container weighed 36 pounds (16.3 kilograms). The cover plate and structural bulkheads were constructed at the Barbers Point Coast Guard Air Station using aircraft materials and components. Level II drawings are presented in appendix B.

The viewing window was 0.125-inch-thick (0.32-cm) clear acrylic. The viewing window was attached to the cover plate with four quarter-turn aircraft screws and three number 10 bolts.

Feeder mechanisms and pigeon support brackets were bolted to the internal bulkhead. The peck keys were bolted to the cover plate.

### Helicopter Control/Display Panel

The wiring diagrams and assembly layouts for the control/display equipment are shown in appendix B. The panel weighed 9 pounds (4.1 kilograms) and the cable weighed 5 pounds (2.3 kilograms).

The control/display panel and feeders operated on 28 V dc and drew less than 7.0 amps. The power cable was plugged into an accessory power outlet in the helicopter and

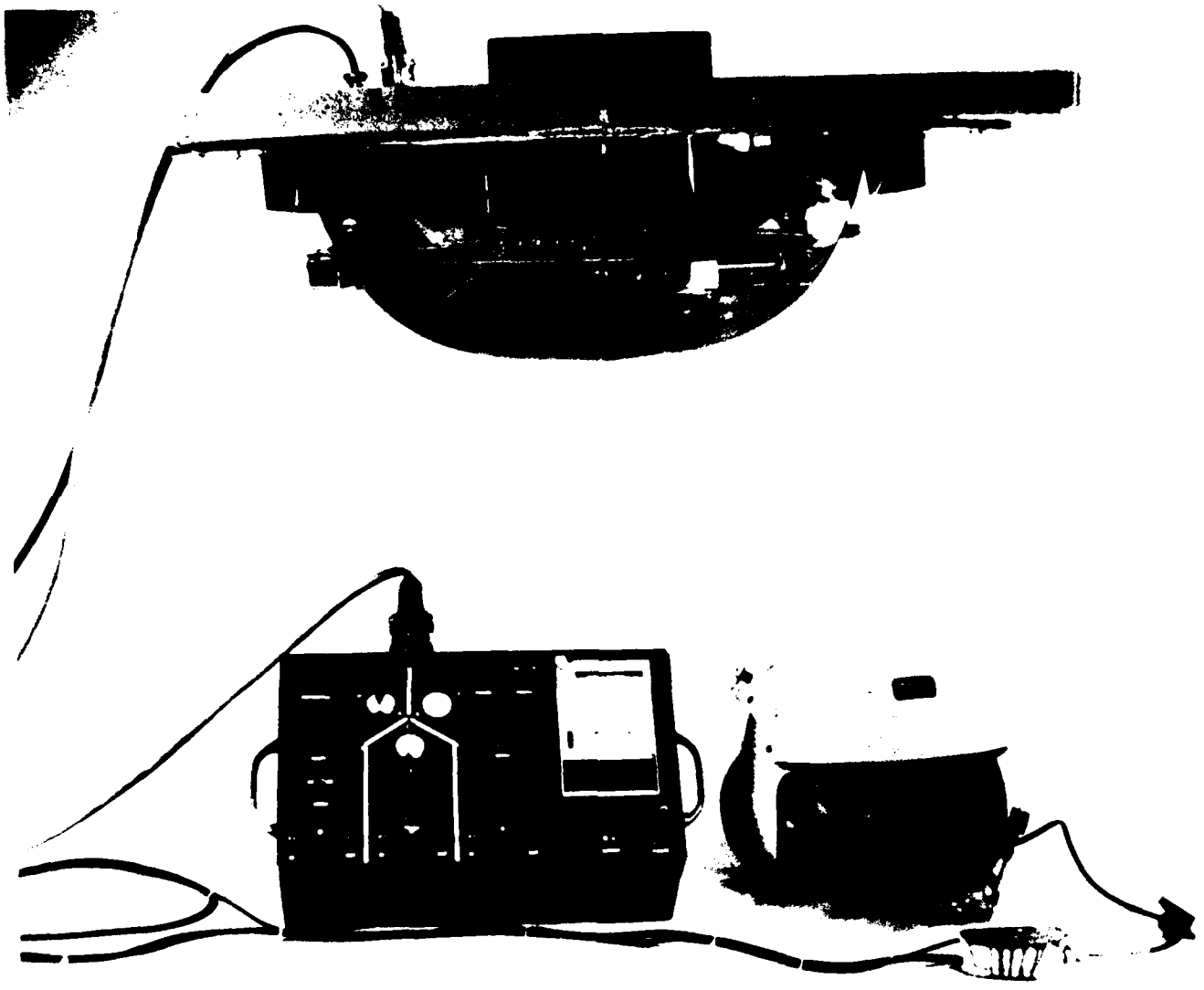

Figure 3. Flight equipment: observation container with pigeons (top), control/display panel (lower left); and crew member's helmet (lower right).

was connected to the pigeon container. The second cable connected the control/display panel and the bird container.

Each chamber in the container operated separately. Appendix B presents the circuit for one chamber. In order to simplify the information displayed to the operator, a special filter circuit was included in the control circuits. The filter electronically set a peck rate criterion that the pigeons' pecking had to exceed before the operator displays were actuated. Thus, random pecks by a pigeon were not displayed. The peck rate set by the filter was called the detection criterion. The detection criterion for each chamber was adjustable. Two switches were used: one to establish the interval (seconds) in which the pigeon was required to complete a prescribed number of pecks, and the other for the number of pecks. The timing intervals were 4, 5, 6 or 7 seconds; the number of pecks, 4, 6 or 8.

A table in appendix D shows the detection criteria that could be selected. After the pigeon achieved the detection criterion, every peck activated the display. The filter circuit included an automatic reset. Also, the operator could reset the circuit manually.

The display circuit included a 1.5-kHz alert tone which was wired to the left ear speaker in the trainer's flight helmet. The tone alerted the trainer that one of the pigeons had made a detection. Each peck thereafter produced the tone until the filter was reset. The visual display was located centrally on the panel, as shown in figure 3. The display included a light for each chamber. The lights differed in color and position. The display surface was recessed to increase its visual discriminability and to reduce masking from ambient light. The display included a position reference guide.

Single-pole toggle feeder switches were arranged to correspond to the visual display layout. Status lights indicated to the trainer the position of the feeder tray and correct feeder operation. The status lights were designed to be discriminable by color and position. The red light indicated an extended feeder tray (exposed to the bird). The green light indicated a withdrawn tray. Any feeder mechanism failure was indicated to the trainer by lack of correspondence between the toggle position and the indicator light.

Lighted pushbutton switches controlled the power for the control/display circuit. A separate, parallel lighted pushbutton switch controlled power for the strip-chart event recorder.

Data collection equipment was included in the control panel. Cumulative numeric counters for each chamber recorded responses independent of the filter. A pushbutton reset switch was included for the counters. Each switch was designed to be discriminable by position, size, color, elevation and shape. Each counter surface was recessed to reduce the effects of glare from ambient light. The counters' positions corresponded to the appropriate visual displays and the feeder switches.

The visual displays, the switches, and the indicator lights were labeled with white alphanumeric labels. The background was painted flat black, as shown in figure 3.

## PIGEON TRAINING

Results on the rate of training are summarized in table 2. Details for each bird are listed in appendix E.

Data on the rate of training, as measured by the days and hours of training for the training tasks , are also presented in table 2. The tasks were: (1) response conditioning, (2) stimulus control, (3) basic training completed, or (4) search status. The days of training and hours of training are presented as separate measures of rate of training. The mean and standard deviation presented were calculated from the summed total hours or days

| | | DAYS OF TRAINING | | | | HOURS OF TRAINING | | | |
|---|---|---|---|---|---|---|---|---|---|
| | | MEAN | | STANDARD DEVIATION | | MEAN | | STANDARD DEVIATION | |
| TASK | SUBJECTS | TASK | CUMULATIVE | TASK | CUMULATIVE | TASK | CUMULATIVE | TASK | CUMULATIVE |
| **BASIC TRAINING** | | | | | | | | | |
| RESPONSE CONDITIONING | | | | | | | | | |
| | GROUP I | 5.8 | | 1.7 | | 2.7 | | 1.3 | |
| | GROUP II | 11.0 | | 3.9 | | 5.5 | | 2.5 | |
| | COMBINED | 8.0 | | 4.0 | | 4.1 | | 2.3 | |
| STIMULUS CONTROL | | | | | | | | | |
| | GROUP I | 6.0 | | 1.2 | | 3.6 | | 0.8 | |
| | GROUP II | 7.5 | | 4.2 | | 5.7 | | 3.8 | |
| | COMBINED | 6.8 | | 3.0 | | 4.6 | | 2.8 | |
| BASIC COMPLETED | | | | | | | | | |
| | GROUP I | 57.3 | 68.5 | 12.8 | 10.1 | 84.6 | 91.0 | 13.1 | 12.4 |
| | GROUP II (n=2) | 51.5 | 73.0 | 2.1 | 1.4 | 75.3 | 88.9 | 5.6 | 7.9 |
| | COMBINED | 55.3 | 70.0 | 10.42 | 8.2 | 81.5 | 90.3 | 11.5 | 10.3 |
| **ADVANCED TRAINING** | | | | | | | | | |
| | GROUP I (n=3) | | | | | | | | |
| RESPONSE CONDITIONING | | 4.0 | | 1.7 | | 4.6 | | 1.8 | |
| STIMULUS CONTROL | | 13.3 | | 0.6 | | 13.7 | | 4.3 | |
| SEARCH STATUS | | 16.0 | 117.7 | 1.7 | 36.5 | 19.2 | 168.7 | 6.0 | 53.1 |

Table 2. Pigeon training acquisition of behavior.

required to accomplish each task independent of the other tasks for the specified group of subjects. The mean and standard deviation presented in the cumulative columns were calculated from the summed total hours or days required to accomplish all tasks in basic training and for the basic and advanced training for the specified group of subjects. Response conditioning was completed when the pigeon pecked the key consistently during a 30-minute training session. Stimulus control training was completed when the pigeon pecked the key when the orange target was presented and did not peck the key above criterion level when the target was absent. Basic training was completed when the behavioral and environmental requirements were accomplished. In advanced training, response conditioning was completed when the pigeon pecked the key when the training target was present. Stimulus control was completed when the pigeon responded below a criterion rate when the target was absent. The pigeons attained search status when their behavior met or exceeded the search behavior requirements.

At the completion of response conditioning during basic training, the eight birds were classified into two groups of four, based on each bird's rate of training. Group I consisted of birds 10, 249, 250 and 251, and group II consisted of birds 236, 239, 266 and 267. Group I birds progressed faster (table 2). Birds 236 and 267 (group II) did not complete basic training because the training resources (equipment and personnel) were dedicated to the advanced training of group I birds. The training rates presented for the basic training of group II excluded 236 and 267. Bird 249 was deleted from advanced training because it failed to learn to peck the key in the helicopter container. The other three group I birds progressed to advanced training. Group II birds did not receive any advanced training.

The training of three originally-naive, untrained pigeons to function as search sensors required a mean of 119 training sessions, or 169 training hours (table 2).

Pigeon training began in late April 1979 and by December 1979 advanced training began with group I birds. Group I birds reached search status during April 1980. On 1 May 1980, the Barbers Point Coast Guard Air Station placed the system on standby duty, awaiting a search case. From 1 May to 31 July 1980, the behavior of group I birds was maintained on helicopter flights. From December 1979 through 31 July 1980, the system flew on 71 helicopter flights, 46 by the Station Operations and Maintenance Squadron of the Kaneohe Marine Corps Air Station and 25 by the Barbers Point Coast Guard Air Station.

## SYSTEMS TEST

The system was tested to determine its utility. Four measures were used to evaluate the Sea Hunt system: search performance, reliability, serviceability, and maintainability. Performance and reliability data were collected during search tests. Data on the serviceability and maintainability of the system were collected during support tests.

### Search Test

System performance is a function of the system's ability to support and assist in target detection without harmfully affecting search requirements or other resources. Measures of Sea Hunt's detection ability are:

(a) the probability of detection, as defined in the National Search and Rescue Manual (reference 26).

(b) the percent of trials with first detection for the system, and

(c) the probability of a false alarm.

Daily trial-by-trial results for detection are listed in table 3. Detection data are summarized by target type in table 4. Table 5 summarizes the data.

The comparison of the probability of detection (POD) for Sea Hunt and for the human crews is the primary indicator of Sea Hunt search success. The percentages in tables 4 and 5 were calculated from data in table 3. A detection on the first approach of each trial was scored as a hit; if the target was not detected on the first approach it was scored as a miss. The logic is that, on an actual search, an aircraft would make only one pass over a particular area and the desired target would be detected or not. Thus, the POD for each sensor is the expected probability of detecting a similar target on a search.

During the tests, the Sea Hunt system was first to detect each of the target types (tables 4 and 5), although the human crews' detection performance improved when searching for the larger, fish aggregation buoys.

The Sea Hunt system demonstrated not only a superior POD on the first approach of each trial; it detected the target before the flight crews.

Tables 3, 4 and 5 also present data on the percent of targets which were not localized by the flight crews and were lost during the search tests. During testing, the flight crews were not given information on bird performance. This made it possible to compare the search performance of the birds against that of the flight crews. It was found that 20 percent of the trials resulted in an unlocated and lost target. In training sessions between 1 May 1980 and 30 July 1980, during which the crews were informed of bird performance, only 3.6 percent of the 28 trials resulted in a lost target.

System reliability was calculated from the failure rate of the complete system as the ratio of searches (test flights) completed with adequate system performance. A failure was defined as an event that prevented searching or locating the target. The failure could be in hardware or animal behavior. The primary hardware subsystems that could fail were: (1) power, (2) displays, (3) cables, and (4) peck key. If the behavior of two birds failed simultaneously, the target could not be localized. Inadequate bird performance was defined as failure to detect targets and high false alarm rates. The criteria for a behavioral failure are presented in table 6.

During testing, the Sea Hunt system failed on 2 of 13 days (16 percent). On 18 September, a peck key malfunctioned and bird 250 failed. Both failures were in the forward chambers. On 25 September, the cable connector at the control box failed because of disconnected wires. Although individual bird failures occurred on 69 percent of the flights, the failures did not decrease detection and localization capabilities of the system. Failure of two birds on the same test flight did not occur. Table 7 presents reliability data for the three birds.

**Support Test**

Serviceability and maintainability of the Sea Hunt system were examined. The two equipment failures required a total of 3 hours and 20 minutes to repair, a ratio of 0.15 hours of repair service per flight hour during the test. Maintenance hours per flight hour are presented in table 8.

Also, the frequency of maintenance was examined. The frequency of animal behavior maintenance was calculated as:

$$\text{frequency of training} = \frac{\text{number of days trained}}{61}$$

The frequency of training for each bird (10, 250 and 251) was calculated and found to be 0.13 for bird 10, 0.11 for bird 250, and 0.16 for bird 251.

| DATE 1980 | TRIAL | TARGET TYPE | DETECTED FIRST BY | PASS NUMBER | | FALSE ALARMS PER SEARCH HOUR | FAILURES |
|---|---|---|---|---|---|---|---|
| | | | | DETECTED SEA HUNT | LOCALIZED CREW | | |
| 8-5 | 1 | OFL | SH | 1 | 3 | 3.2 | Pigeon #10 |
| | 2 | OFL | SH | 3 | 6 | | |
| 8-6 | 3 | OFL | SH | 1 | 1 | 2.0 | |
| | 4 | OFL | SH | 1 | NL | | |
| 8-13 | 5 | FB | SH | 1 | 2 | 4.1 | Pigeon #10 |
| | 6 | FB | SH | 1 | 1 | | |
| 8-15 | 7 | RFL | CREW | 1 | 1 | 3.3 | Pigeon #10 |
| | 8 | RFL | SH | 1 | 2 | | |
| 8-20 | 9 | FB | SH | 2 | NL | 1.7 | Pigeon #251 |
| | 10 | FB | SH | 1 | 1 | | |
| | 11 | FB | SH | 1 | NL | | |
| | 12 | FB | SH | 1 | 1 | | |
| | 13 | FB | CREW | 1 | 1 | | |
| 8-21 | 14 | LR | SH | 1 | 1 | | |
| 8-27 | 15 | FB | SH | 1 | 4 | 6.9 | Pigeon #10 |
| 9-3 | 16 | RFL | SH | 1 | NL | 8.3 | Pigeon #250 |
| 9-10 | 17 | FB | CREW | 1 | 1 | 3.1 | Pigeon #250 |
| 9-17 | 18 | FB | CREW | 3 | 2 | 0.0 | Peck Key |
| 9-18 | – | | | | | 5.4 | Pigeon #250 |
| 9-24 | 19 | FB | SH | 1 | 1 | 6.9 | Pigeon #10 |
| | 20 | FB | CREW | 1 | 1 | | |
| 9-25 | – | | | | | | Cable |

OFL – Orange Float
RFL – Red Float
FB – Fish Aggregation Buoy
LR – Life Raft
SH – Sea Hunt
NL – Not Localized

Table 3. Test results.

| TARGET | PROBABILITY OF DETECTION SEA HUNT | · CREW | MEAN PASS TO DETECT BY SEA HUNT | MEAN PASS TO LOCALIZE BY CREW | PERCENT NOT LOCALIZED BY CREW |
|---|---|---|---|---|---|
| RFL<br>OFL | 0.86 | 0.29 | 1.29 (s = 0.76)<br>n = 7 | 2.60 (s = 2.07)<br>n = 5 | 29%<br>(2/7) |
| FB<br>LR | 0.83 | 0.58 | 1.23 (s = 0.62)<br>n = 13 | 1.45 (s = 0.97)<br>n = 11 | 15%<br>(2/13) |

RFL – Red Float
OFL – Orange Float
FB – Fish Aggregation Buoy
LR – Life Raft

Table 4. Performance by target type.

| | SEA HUNT SYSTEM | | FLIGHT CREWS | |
|---|---|---|---|---|
| PROBABILITY OF DETECTION | 0.85 | n = 20 | 0.50 | n = 20 |
| PERCENT TRIALS FIRST DETECTION | 70 | n = 20 | 25 | n = 20 |
| MEAN PASSES TO DETECT/LOCALIZE | 1.25<br>(s = 0 64) | n = 20 | 1.88<br>(s = 1.41) | n = 16 |
| FALSE ALARMS PER SEARCH HOUR | 3.90 | | – | |

Table 5. Summarized performance data.

| *CRITERION* | DEFINITION |
|---|---|
| FALSE ALARM | 1. Four false alarms within a 30-minute period.<br>2. Continuous responding for 5 minutes or more after reinforcement is given.<br>3. Six false alarms within a 60-minute period. |
| TARGET DETECTION | 1. Failure to exceed the detection criteria after the target, visible to the pigeon, was localized by a crew member<br>2. Two consecutive misses. |

Table 6. Criteria for a behavioral failure.

| BIRD | FAILURE RATE | FAILURE TYPE |
|---|---|---|
| 10 | 0.33 | False alarms |
| 250 | 0.25 | False alarms |
| 251 | 0.08 | Target misses |

Table 7. Animal failure data.

| MAINTENANCE FUNCTION | HOURS FLIGHT HOUR |
|---|---|
| Hardware checks and cleaning | 0.2 |
| Bird behavior training (ground-based only) | 2.5 |
| Total system | 2.7 |

Table 8. Maintenance hours per flight hour of test.

## DISCUSSION

The development and tests of the Sea Hunt prototype system have resulted in a system that can detect and localize a variety of targets differing in size, shape and color (red, yellow or orange) in unknown locations to improve the overall detection capability of the search effort. The probability of detection (POD) values reported here are comparable to the results from tests of the first Sea Hunt prototype (reference 16).

The system's reliability was acceptable. Although animal behavior failures were recorded, the system's performance did not deteriorate due to redundancy built into the system. It is believed that other animal training/maintenance methods would enhance the reliability of animal behavior.

Advanced training was conducted from a helicopter flying over open waters. Unplanned nuisance targets (i.e., boat with orange deck or a sailboat with a red sail) were encountered during some flights. The nuisance targets interfered with training and degraded the quality of training. If a nuisance target was detected by Sea Hunt a false alarm was detected also by the flight crew. Thus, the false alarm values presented are a collective function of false alarms and correct detections of nuisance targets unseen by the flight crews.

The equipment was determined to be reliable and maintainable. The two failures were minor and quickly serviced. Transmission of vibration to the peck keys was a recurring but minor problem during training and tests. Vibration did not affect the reliability or maintainability of the system, according to the established standards.

The design of the mechanism attaching the Sea Hunt observation container to the Coast Guard's H-52 helicopter has not been finalized. A modified search platform normally carried aboard the H-52 during searches was used for training and testing. The observation container was bolted to the platform. The Coast Guard determined this design was

unacceptable for long term use. Because the H-52 is being phased out of service, alternative designs for attachment of the Sea Hunt container to the H-52 were not sought. Mounting and attaching mechanisms can be made after the H-52's replacement is purchased and deployed to Coast Guard air stations.

## CONCLUSIONS

1. The development effort produced and tested a prototype Sea Hunt system.

2. During search tests, the system detected and localized targets of unknown position which varied in size, color and shape.

3. The system was found to be reliable.

4. Support tests showed that Sea Hunt is serviced and maintained easily.

5. Further improvements are possible and are addressed in the list of recommendations.

## RECOMMENDATIONS

1. Improvements in the training methods are needed to control the occurrence of targets adequately. A training device that simulates the ocean search environment would provide the control required. The simulator also could substitute for the helicopter-conducted search training, and thus improve animal behavior maintenance. Simulator development is a prerequisite to further testing or long term deployment of Sea Hunt systems at Coast Guard air stations.

2. It is recommended that a honeycombed, fiberglass top plate be used on the container to reduce transmitted vibration to the peck keys, as well as making the overall system lighter in weight. Appendix B includes drawings of the recommended top plate.

3. Operational tests of the system are recommended. The scope should include performance and support tests. The tests should be conducted with Coast Guard personnel as the operators of the system. Technical representatives should assist with the maintenance of the system.

4. Final development of a helicopter attachment mechanism for the Coast Guard should be postponed until the new helicopters are delivered.

## REFERENCES


1. Benggeli, R. L. and W. J. Paule, The Pigeon Retina: Quantitative Aspects of the Optic Nerve and Ganglion Cell Layer, Journal of Comparative Neurology, 137, p 1-18, 1969.

2. Blough, D. S., Effects of the Number and Form of Stimuli on Visual Search in the Pigeon, Journal of Experimental Psychology: Animal Behavior Processes, p 211-233, 1979.

3. Blough, D. S., Visual Search in the Pigeon: Hunt and Peck Method, Science, 196 (4293), p 1013-1014, 1977.

4. Blough, P. M., The Visual Acuity of the Pigeon for Distant Targets, Journal of the Experimental Analysis of Behavior, 15, p 57-67, 1971.

5. Donovan, W. J., Structure and Function of the Pigeon Visual System, Physiological Psychology, 6 (4), p 403-437, 1978.

6. Ferster, C. B. and B. F. Skinner, Schedules of Reinforcement, Appleton-Century-Crofts, Inc., New York, N.Y., 1957.

7. Herrnstein, R. J., Acquisition, Generalization, and Discrimination Reversal of a Natural Concept, Journal of Experimental Psychology: Animal Behavior Processes, vol 5 (2), p 116-129, 1979.

8. Herrnstein, R. J., C. H. Loveland and C. Cable, Natural Concepts in Pigeons, Journal of Experimental Psychology: Animal Behavior Processes, 2 (4), p 285-302, 1976.

9. Hodos, W. L. Smith and J. C. Bonbright, Jr., Detection of the Velocity of Movement of Visual Stimuli by Pigeons, Journal of the Experimental Analysis of Behavior, 25 (2), p 143-483, 1976.

10. Lubou, R. E., High-Order Concept Formation in the Pigeon, Journal of the Experimental Analysis of Behavior, 21 (3), p 475-483, 1974.

11. Pumphrey, R. J., Sensory Organs: Vision, Chapter XV, Biology and Comparative Physiology of Birds, A. J. Marshall (ed), Academic Press, New York, p 55-68, 1961.

12. Rhomba, J. H., Ambush Detection by Pigeons, In-House Studies: Achieving Controlled Bird Flight, U.S. Army Limited War Laboratory Technical Report, 67-13, 1967.

13. Skinner, B. F., Pigeons in a Pelican, The American Psychologist, 15 (1), p 28-37, 1960.

14. Skinner, N. F. and R. J. Beishon, Similarities in the Color Vision of Pigeons and Man, The Journal of Genetic Psychology, 119, p 25-28, 1971.

15. Verhave, T., The Inspector General is a Bird, Reading in Experimental Psychology Today, N. Adler (ed), CRM Books, Del Mar, CA, p 91-95, 1967.

16. Simmons, J. V., Project Sea Hunt – Final Report, NOSC Technical Report 414, 1979.

17. Foels, J. E., Evaluation of Naval Ocean Systems Center Project Sea Hunt, Coast Guard Air Station, Barbers Point, HI, Memo 3960, 27 September 1978.

18. Sautter, M. H., Evaluation of Project Sea Hunt by Station Operations and Maintenance Squadron, U.S. Marine Corps Air Station, Kaneohe Bay, HI, Memo OMOT/FTF/sk 3100, 1978.

19. Donaghy, R. E., Station Operations and Maintenance Squadron Support of Naval Ocean Systems Center Pigeon Project, U.S. Marine Corps Air Station, Kaneohe Bay, Station Operations and Maintenance Squadron Memo OMOT/FTF/sk 3100, 1978.

20. Meydag, R. H., Project Sea Hunt, U.S. Marine Corps Marine Helicopter Squadron ONE Memo C 148-10 RFP/nmp 3930, 1979.

21. Chapanis, A., Man-Machine Engineering, Brooks-Cole Publishing Co., Monterey, CA, 1965.

22. McCormick, E. J., Human-Factors in Engineering and Design, McGraw-Hill, Inc., New York, N.Y., 1976.

23. Reese, E. P., Behavior Theory in Practice, filmed by Charter Oak Studios, outline to film Meredith Publishing Company, New York, N.Y., 1966.

24. Reynolds, G. S., A Primer of Operant Conditioning, Scott, Foresman and Company, Glenview, IL, 1968.

25. Unknown, Hawaii Fishing News, p 20-21, 10 June 1980.

26. National Search and Rescue Manual, U.S. Government Printing Office, CG 308, AMF 64-2, NWP-37 (B), FM 20-150, Stock Number 5012-0071, p 8-70, 1973.

## APPENDIX A: METHOD OF CONTROLLING DAILY BODY WEIGHT IN THE PIGEON

An algorithm was formulated empirically that allowed the pigeon trainer to maintain the body weight of each pigeon within ±5 grams of the bird's desired training weight. This algorithm was used daily during the development of Sea Hunt. The format was designed to enable people unskilled in animal behavior to use the algorithm easily. It is presented below in sequential steps. Two animal weight measurements are used: the animal's current weight and the animal's desired run weight. The current weight was determined by weighing the animal on a scale or, depending on the time of day, by weighing the animal and adding to that weight the amount of food consumed during the training session.

DAILY PROCEDURES

A. General: Weighing Instructions
   1. Weigh each bird at 8:00 A.M., 12:00 Noon, 4:00 P.M., and immediately before each training session, recording on the weight form:
      a. Time of weighing,
      b. Weight of bird.
   2. Calculate the amount the bird is over/underweight.
   3. Proceed to the following procedures according to the time of feeding.

B. Eight A.M. and Noon Feeding Instructions: Follow these procedures based on amount of over/underweight.
   1. Overweight: Do not give supplemental food.
   2. Underweight:
      a. If less than 3 grams, do not give supplemental food.
      b. If more than 3 grams but less than 10 grams: remove access to grit: then feed the bird the number of grams underweight.
      c. If more than 10 grams underweight: remove access to grit: then add 5 grams to the amount that the bird is underweight and feed the bird this amount.

C. Four P.M. Feeding: These procedures depend first on whether or not the bird is trained during the day; secondly, upon the bird's current weight.
   1. If bird was trained in the morning, and is:
      a. Overweight more than 5 grams: do not give supplemental food.
      b. Overweight, but less than 5 grams: subtract the amount overweight from 5 grams and feed this amount.
      c. Underweight (any amount): add 5 grams to the amount of grams underweight and feed this amount to the bird.
   2. If bird was trained in the afternoon: determine the amount of food eaten during training and add this to the bird's current weight: then follow procedures outlined below, using weight calculated above.
      a. Overweight more than 5 grams: do not feed.

b. Overweight less than 5 grams: subtract the amount overweight from 5 grams and feed this amount.

c. Underweight (any amount): add 5 grams to the amount of grams underweight and feed this amount to the bird.

## APPENDIX B: LEVEL II DRAWINGS

The following pages contain the Level II drawings of Sea Hunt equipment. Note that the drawings have been reduced; therefore, the scale is incorrect.

NOTES

1. COAT ALL ALUMINUM PARTS PER MIL-C-5541, CLASS 3. PAINTING ON SELECTED AREAS IS OPTIONAL
2. SOLDER ALL ELECTRICAL CONNECTIONS PER MIL-STD-1460 USING ITEM 92

| -6 | -5 | -4 | -3 | -2 | -1 | FSCM NO | PART OR IDENTIFYING NUMBER | DESCRIPTION OR NOMENCLATURE | MATERIAL/SPEC/REF DESG | ITEM NO |
|---|---|---|---|---|---|---|---|---|---|---|
| QTY REQ | | | | | | | | | | |
| | | | 1 | | | | -32 | MOUNT, FWD-PORT | AL ALY, T6, QQ-A-250/11 | 32 |
| | | | 1 | | | | -31 | ,FWD-STBD | ,, | 31 |
| | | | 2 | | | | -30 | ,REAR, STATIONARY | ,, | 30 |
| | | | 2 | | | | -29 | MOUNT, REAR, SWIVEL | | 29 |
| 1 | | | | | | | -28 | WINDOW FRAME-CENTER | | 28 |
| 1 | | | | | | | -27 | ,-BOTTOM | ,, | 27 |
| 1 | | | | | | | -26 | WINDOW FRAME - TOP | ,QQ-A-250/11 | 26 |
| | | | | 1 | | | -25 | MOTOR/ARM ADAPTOR | ,QQ-A-200/8 | 25 |
| | | | | 1 | | | -24 | FEEDER MOUNT | ,, | 24 |
| | | | | 1 | | | -23 | FEEDER MOUNT/GUIDE | ,QQ-A-200/8 | 23 |
| | 1 | | | | | | -22 | FEEDER | ,QQ-A-250/11 | 22 |
| | | | | 1 | | | -21 | EXTENSION ARM | ,, | 21 |
| | | | | 1 | | | -20 | MOTOR ARM | AL ALY, T6, QQ-A-250/11 | 20 |

PARTS LIST

| -6 | -5 | -4 | -3 | 2 | -1 | FSCM NO | PART OR IDENTIFYING NUMBER | DESCRIPTION OR NOMENCLATURE | MATERIAL/SPEC/REF DESG | ITEM NO |
|---|---|---|---|---|---|---|---|---|---|---|
| QTY REQ | | | | | | | | | | |
| | | | | | 3 | | -19 | PECK KEY HOLDER | AL ALY, T4, QQ-A-250/11 | 19 |
| | | | | | 3 | | -18 | VERTICAL SUPPORT | ,, | 18 |
| | | | | | 3 | | -17 | VERTICAL SUPPORT (FEEDER) | ,, | 17 |
| | | | | | 3 | | -16 | PIGEON SUPPORT PLATE | ,, | 16 |
| | | | | 1 | | | -15 | PIGEON/FEEDER SUPPORT PLATE | ,, | 15 |
| | | | | | 3 | | -14 | COMPARTMENT PLATE | ,, | 4 |
| | | | 3 | | | | -13 | HATCH COMPARTMENT PLATE | ,, | 3 |
| | | | 1 | | | | -12 | HATCH | ,, | 12 |
| | | | | | 1 | | -11 | CONNECTOR COVER | ,, | 11 |
| | | | | | 1 | | -10 | CONNECTOR COVER END PLATE | ,, | 10 |
| | | | | | 1 | | -9 | VENTILATION AIR DEFLECTOR | ,T6, QQ-A-250/11 | 9 |
| | | | 1 | | | | -8 | MAIN SUPPORT PLATE FRAME | ,TG, QQ-A-200/8 | 8 |
| | | | 1 | | | | -7 | MAIN SUPPORT PLATE | AL ALY, TG, QQ-A 250/11 | 7 |
| – | | | | | 1 | | -6 | VIEWING WINDOW ASSY | | 6 |
| | – | | | 1 | | | -5 | FEEDER ASSEMBLY | | 5 |
| | | – | | | 1 | | -4 | HATCH ASSEMBLY | | 4 |
| | | | – | | 1 | | -3 | MAIN SUPPORT PLATE ASSEMBLY | | 3 |
| | | | | – | 3 | | -2 | FEEDER SUPPORT PLATE ASSEMBLY | | 2 |
| | | | | | – | | -1 | FLIGHT CONTAINER ASSY | | 1 |

PARTS LIST

| 19 | 18 | 17 | 16 | 15 | 14 | 13 | 12 | 11 | 10 | 9 | 8 | 7 | 6 | 5 | 4 | 3 | 2 | 1 | REV SHEET |
|---|---|---|---|---|---|---|---|---|---|---|---|---|---|---|---|---|---|---|---|
| | | | | | | | | | | | | | | | | | | | REV STATUS |
| | | | | | | | | | | | | | | | | | | | OF SHEETS |

| | |
|---|---|
| NEXT ASSY | USED ON |
| APPLICATION | |

INTERPRET DRAWING IN ACCORDANCE WITH DOD STD 100
DO NOT SCALE THIS DRAWING

UNLESS OTHERWISE SPECIFIED
DIMENSIONS ARE IN INCHES
BREAK ALL EDGES .016 MAX
REMOVE ALL BURRS
TOLERANCES ARE
.XX ± .03 .XXX ± .010
ANGLES ± 0° 15'
FILLETS .010 MAX
SURFACE ROUGHNESS 125

RELEASED DATE

| | | |
|---|---|---|
| APPROVED | | |
| APPROVED | | |
| CHECKED | | |
| PREPARED | F SUGIYAMA | 8 2408 |
| PROJECT NUMBER | | |
| COGNIZANT CODE | | |
| APPROVED FOR | | |
| BY DIRECTOR | | |

NAVAL OCEAN SYSTEMS CENTER
SAN DIEGO CA 92152

PIGEON FLIGHT CONTAINER ASSEMBLY

| SIZE | FSCM NUMBER | DRAWING NUMBER |
|---|---|---|
| D | 55910 | 3103553 |

SCALE NONE | UNIT WT | SHEET 1 OF 19

CAGE NO 3103553 REV

REVISIONS

| ZONE | LTR | DESCRIPTION | DATE | APPROVAL |
|---|---|---|---|---|

B-2

| -6 | -5 | -4 | -3 | -2 | -1 | FSCM NO | PART OR IDENTIFYING NUMBER | DESCRIPTION OR NOMENCLATURE | MATERIAL / SPEC / REF DESG | ITEM NO |
|---|---|---|---|---|---|---|---|---|---|---|
| | | | | 4 | | | MS51957-19 | SCREW, PAN HEAD | FF-S-92 | 73 |
| | | | | 2 | | | -17 | | | 72 |
| | | | | | 4 | | -15 | | | 71 |
| | | | | 4 | 21 | | -14 | | | 70 |
| | | | | 4 | | | MS51957-12 | SCREW, PAN HEAD | FF-S-92 | 69 |
| | | | 58 | | | | MS20426B6-9 | RIVET, .188 DIA | MIL-R-5674 | 68 |
| | | | 14 | | | | MS20426B3-4 | RIVET, .094 DIA | MIL-R-5674 | 67 |
| | | | 7 | | | 71286 | 212-2S | RECEPTACLE | REXNORD INC SPECIALTY FASTENER DIVISION 22 SPRING VALLEY RD PO BOX 98 PARAMUS, NJ 07652 | 66 |
| 4 | | | | | | | 2600-SW | SPLIT WASHER | | 65 |
| | | 3 | | | | | 2653G-4 | WING HEAD STUD | | 64 |
| 4 | | | | | | 71286 | 2652G-14 | SLOTTED HEAD STUD | | 63 |
| | | | | | 1 | | MS35489-20 | GROMMET | MIL-G-3036 | 62 |
| | | | | | 1 | | -16 | | | 61 |
| | | | | | 1 | | MS35489-11 | GROMMET | MIL-G-3036 | 60 |
| | | | | 1 | 3 | | .750 WIDE x 8.00 LONG | FASTENER TAPE, HOOK, COLOR-BLACK | MIL-F-21840 TYPE II, CLASS 1 | 59 |
| AR | | | | AR | AR | 04963 | SCOTCH-GRIP 2210 | CONTACT CEMENT | MINNESOTA MIN NG AND MFG CO 3M CENTER ST PAUL, MN 55101 | 58 |
| | AR | | | | | 75037 | SCOTCHCAST 4401 | ENCAPSULATING COMPOUND | | 57 |
| | | | | | 3 | | RCR05G180JM | RESISTOR, 18 OHM | MIL-R-39008 | 56 |
| | | | | AR | | 1G42B | 9421 | CABLE, FEEDER CONN | BELDEN CORP ELECTRONICS DIV 2200 US HWY 27 SOUTH PO BOX 1980 RICHMOND, IN 47374 | 55 |
| | | | | | AR | 1G42B | 8443 | CABLE, PECK KEY | | 54 |
| | | | | | 3 | | MS15571-2 | LAMP (NO 47) | | 53 |
| | | | | | 3 | 95263 | T-19 | LAMP HOLDER | LEECRAFT MFG CO INC 21-16 44TH RD LONG ISLAND CITY, NY 11101 | 52 |

PARTS LIST

| -6 | -5 | -4 | -3 | -2 | -1 | FSCM NO | PART OR IDENTIFYING NUMBER | DESCRIPTION OR NOMENCLATURE | MATERIAL / SPEC / REF DESG | ITEM NO |
|---|---|---|---|---|---|---|---|---|---|---|
| | | | | | 1 | 71785 | 353-11-09-001 | TERMINAL BLOCK | TRW INC, TRW CINCH CONNECTORS 1501 MORSE AVE ELK GROVE VILLAGE, IL 60007 | 51 |
| | | | | | 1 | 25140 | 5A507-2 | DRIVE MOTOR | TRW INC, TRW GLOBE MOTOR DIV 2275 STANLEY AVE DAYTON, OH 45404 | 50 |
| | | | | | 2 | 01963 | E33-50KX | LIMIT SWITCH | CHERRY ELECTRICAL PRODUCTS CORP 3600 SUNSET AVE WAUKEGAN, IL 60085 | 49 |
| | | | | | 1 | | MS3116F12-8S | CONNECTOR, PLUG | MIL-C-26482 | 48 |
| | | | | | 1 | | MS3112 12-8P | ,RECEPTACLE | MIL-C-26482 | 47 |
| | | | | | | 1 | MS3102R28-21S | ,LARGE | MIL-C-5015 | 46 |
| | | | | | | 1 | MS3102R16S-7S | CONNECTOR, SMALL | MIL-C-5015 | 45 |
| | | | | | 3 | 55910 | 0103654-1 | PECK KEY | SEE MODIFICATION DWG | 44 |
| 1 | | | | | | 55910 | 0103653-1 | WINDOW, VIEWING | SEE SCD | 43 |
| | | 2 | | | | | -42 | CONTOUR EDGING, STRAIGHT | PLYWOOD, .10ML MARINE GRADE | 42 |
| | | 2 | | | | | -41 | CONTOUR EDGING, TARERED | | 41 |
| 1 | | | | | | | -40 | PADDING, WINDOW | MIL-R-6130, TYPE II GRADE A, SOFT, SHEET | 40 |
| | | | | | 5 | | -39 | ,COMPARTMENT | | 39 |
| | | | | 1 | 3 | | -38 | ,FASTENER | | 38 |
| | | | | 1 | | | 37 | ,FEEDER PNG | | 37 |
| | | | | 1 | | | -36 | PADDING, FEEDER | MIL-R-6130, TYPE II, GRADE A, SOFT, SHEET | 36 |
| | | | | 3 | | | -35 | LIMIT SWITCH SPACER | FIBERGLASS/EPOXY RESIN (G-10) | 35 |
| | | | | 2 | | | 34 | BEARING WASHER | ACETAL HOMOPOLYMER (L P 392, TYPE II, CLASS 1 DELRIN) | 34 |
| | | | | 1 | | | -33 | FEEDER GUIDE BLOCK | | 33 |

PARTS LIST

| SIZE | FSCM NUMBER | DRAWING NUMBER |
|---|---|---|
| D | 55910 | 0103553 |

WEIGHT NONE SHEET 2

B-3

| | | | | | | | | | | |
|---|---|---|---|---|---|---|---|---|---|---|
| | | | | | AR | | MS3367-5-0 | STRAP, TIEDOWN | | 93 |
| | | | | AR | AR | | SNCOWRP3 | SOLDER | QQ-S-571 | 92 |
| | | | 2 | | | | MS35425-72 | WINGNUT, CRES | FF-N-845 | 91 |
| | | | 4 | 4 | | | MS17830-4C | NUT, SELF-LOCKING, HEX | MIL-N-25027 | 90 |
| B | | 18 | | B | 78 | | -08C | | | 89 |
| B | | | B | 2 | 14 | | -06C | | | 88 |
| | | | | 14 | 25 | | MS17830-04C | NUT, SELF-LOCKING, HEX | MIL-N-25027 | 87 |
| | | | 2 | | | | MS35307-339 | SCREW, HEX HEAD | FF-S-85 | 86 |
| | | | | 2 | | | -322 | | | 85 |
| | | | 4 | | | | -314 | | | 84 |
| | | | | 1 | | | MS35307-303 | ,HEX | FF-S-85 | 83 |
| | | 18 | | 4 | 75 | | MS51957-45 | ,PAN | FF-S-92 | 82 |
| B | | | | | | | MS51959-46 | ,FLAT | | 81 |
| | | | | 4 | 3 | | -45 | | | 80 |
| | | | 8 | | | | -35 | | | 79 |
| B | | | | | | | MS51959-29 | ,FLAT | | 78 |
| | | | | 2 | | | MS51957-33 | ,PAN | | 77 |
| | | | | | 2 | | -31 | | | 76 |
| | | | | | 4 | | -30 | | | 75 |
| | | | | | B | | MS51957-27 | SCREW, PAN HEAD | FF-S-92 | 74 |
| -6 | -5 | -4 | -3 | -2 | -1 | FSCM NO | PART OR IDENTIFYING NUMBER | DESCRIPTION OR NOMENCLATURE | MATERIAL/SPEC/REF DSG | ITEM NO |
| QTY REQ | | | | | | | | | | |

PARTS LIST

| SIZE | FSCM NUMBER | DRAWING NUMBER |
|---|---|---|
| D | 55910 | 0103553 |

SCALE: NONE SHEET 3

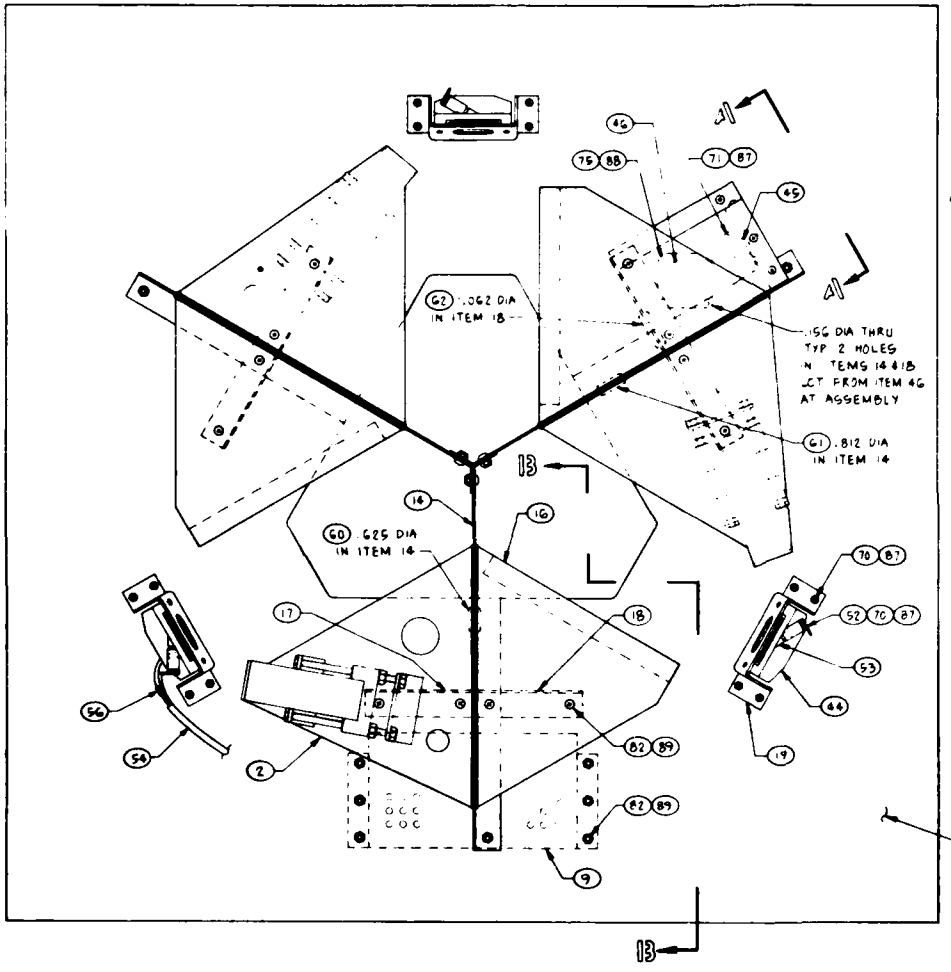


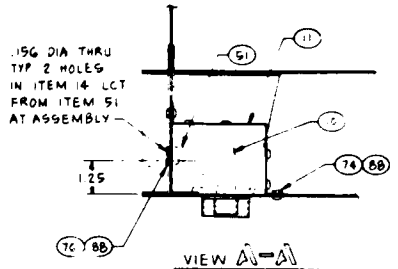


VIEW A1-A1

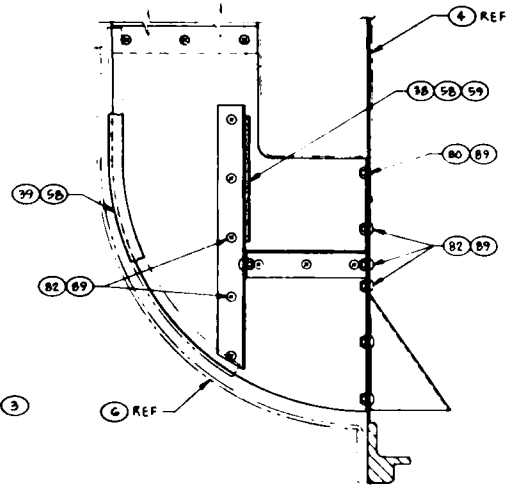


SECTION 13-13

(-1) FLIGHT CONTAINER ASSEMBLY

| SIZE | FSCM NUMBER | DRAWING NUMBER |
|---|---|---|
| D | 55910 | 0103553 |
| SCALE 1/2 | | SHEET 4 |

B-5

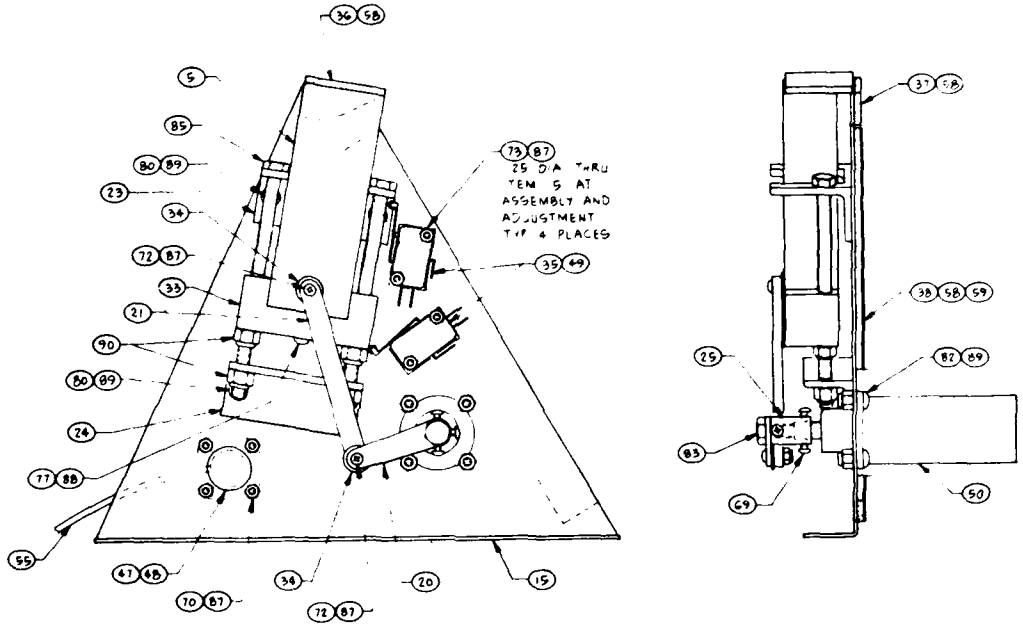


(-2) FEEDER SUPPORT PLATE ASSEMBLY

| SIZE | FSCM NUMBER | DRAWING NUMBER |
|---|---|---|
| D | 55910 | 0103553 |

SCALE 1/2 WT: 5

B-6

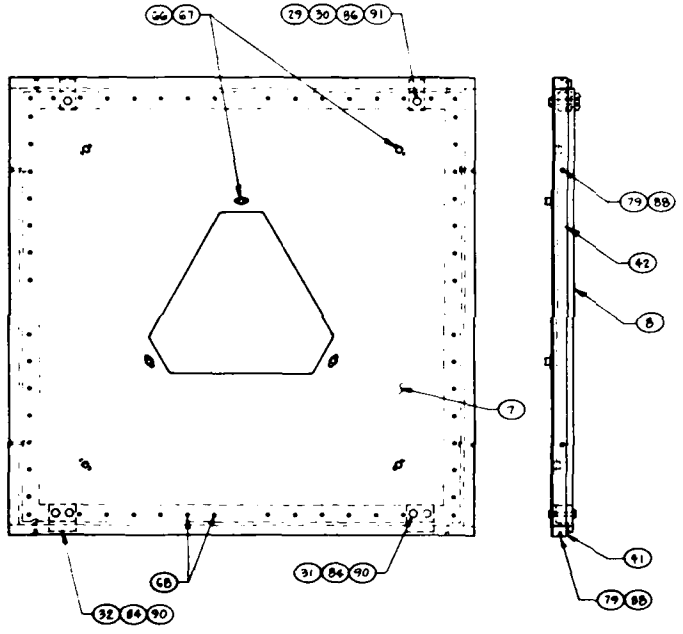


-3 MAIN SUPPORT PLATE ASSEMBLY

SCALE 1/4

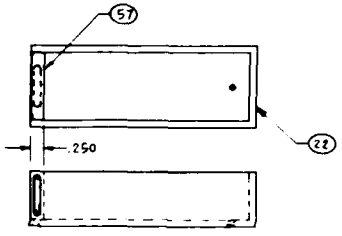


-5 FEEDER ASSEMBLY

SCALE 1/1

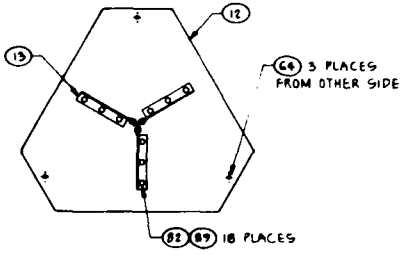


-4 HATCH ASSEMBLY

SCALE 1/4

| SIZE | PROJ NUMBER | DRAWING NUMBER |
|---|---|---|
| D | 55910 | 0103553 |
| SCALE NOTED | | SHEET 6 |

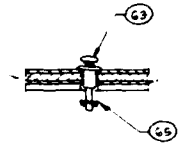


DETAIL A
SCALE 1/1

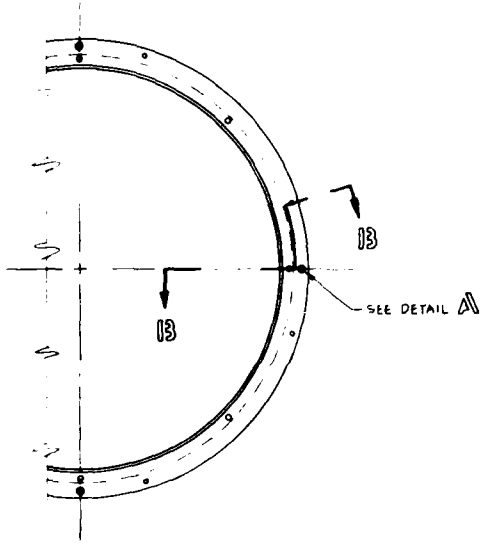


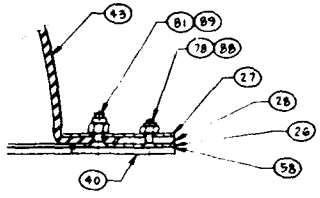


SECTION 13-13
SCALE 1/1

(-6) VIEWING WINDOW ASSEMBLY
SCALE 1/2

| SIZE | FSCM NUMBER | DRAWING NUMBER |
|---|---|---|
| D | 55910 | 3553 |

SCALE NOTED

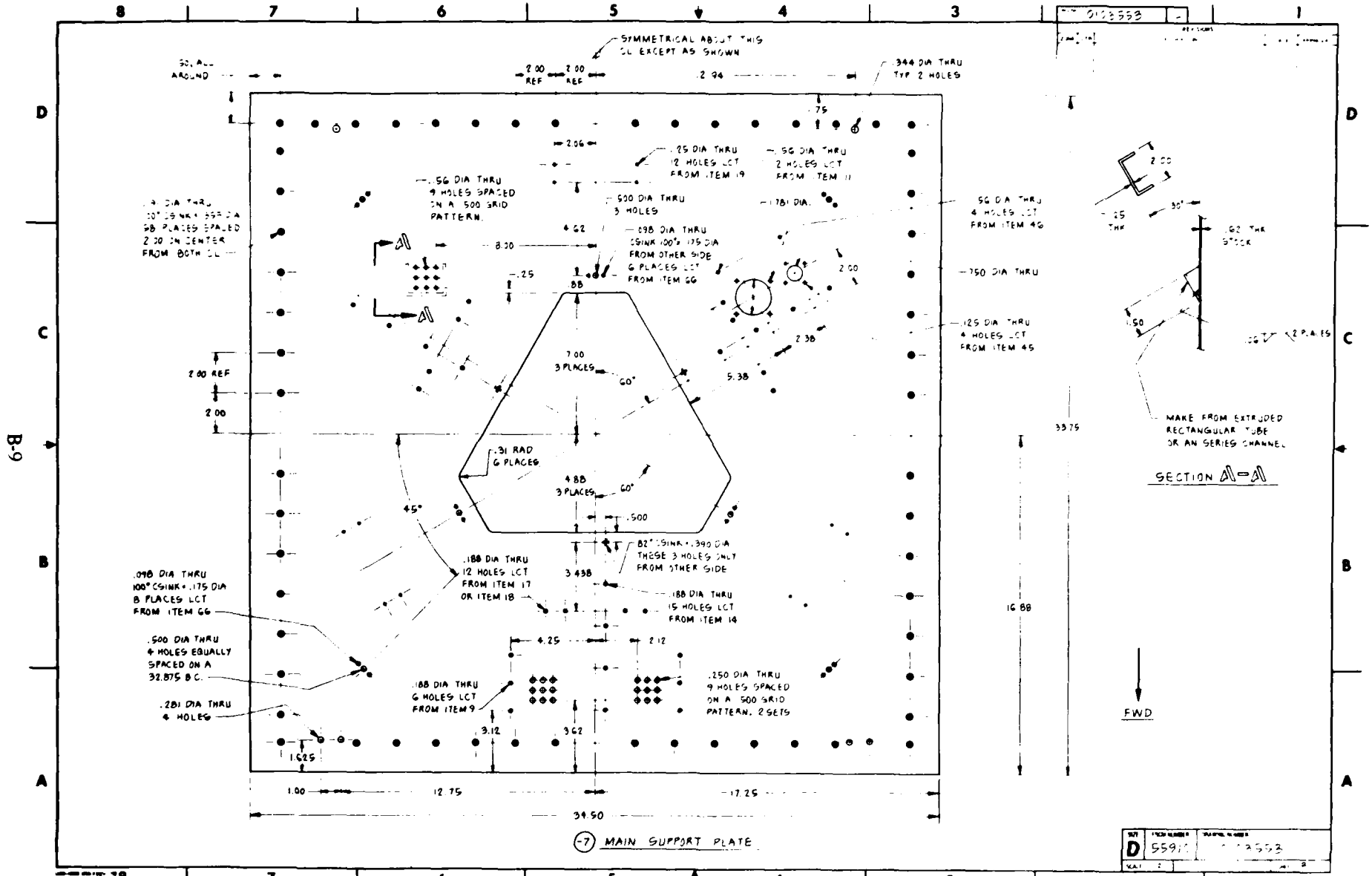


(-7) MAIN SUPPORT PLATE

| SIZE | DRAWING NUMBER | REV |
|---|---|---|
| D | 559[illegible] | [illegible] |

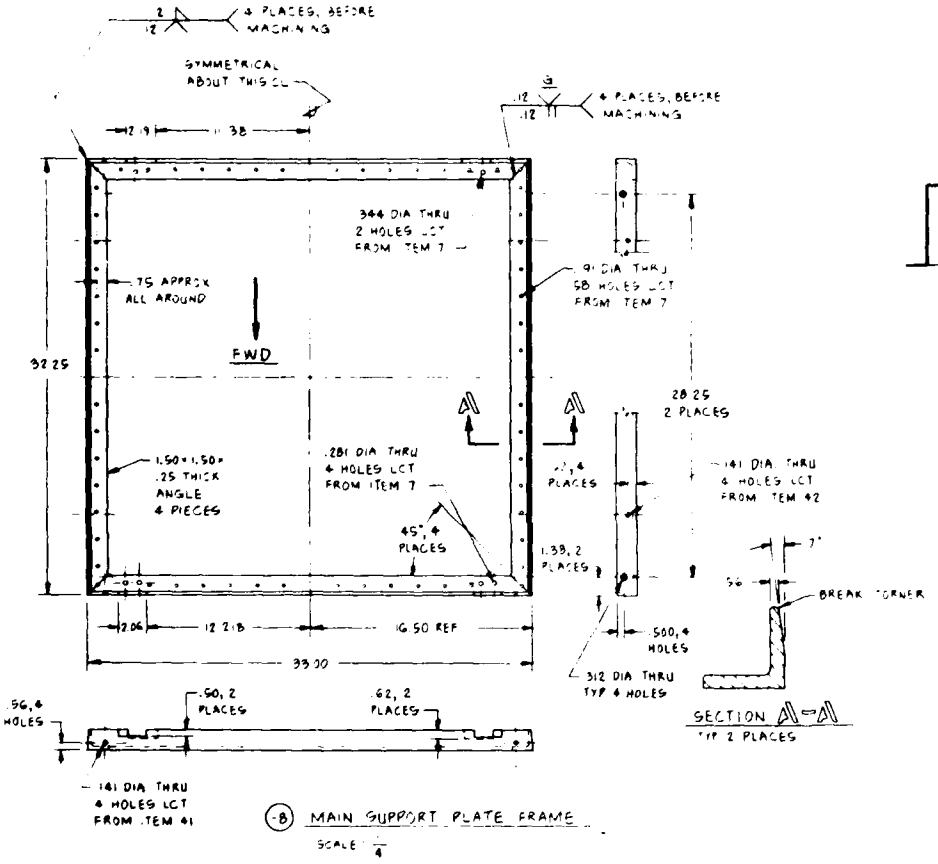


(-8) MAIN SUPPORT PLATE FRAME

SCALE: 1/4

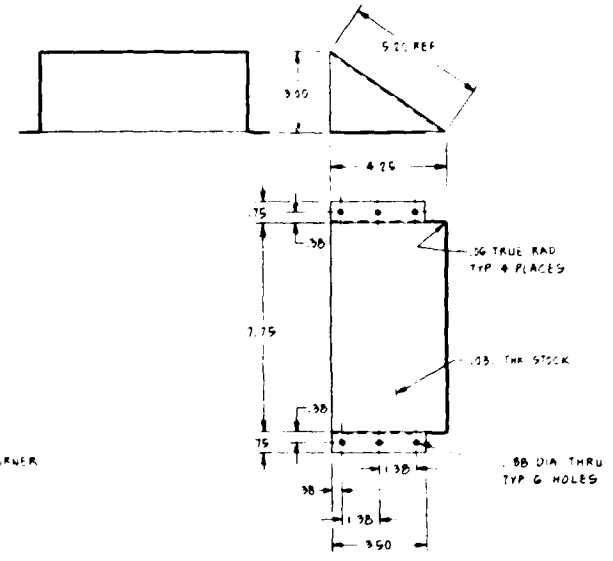


(-9) VENTILATION AIR DEFLECTOR

SCALE: 1/2

| SIZE | PART NUMBER | DRAWING NUMBER |
|---|---|---|
| D | 55910 | 51-3553 |

SCALE NOTED

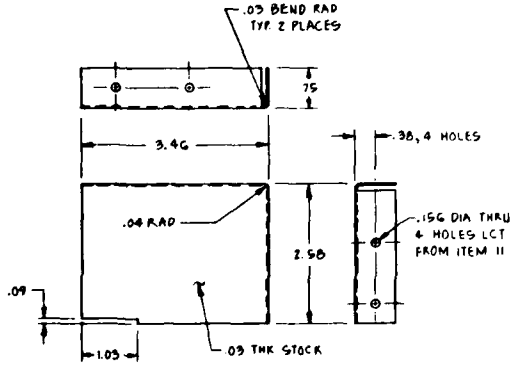


(-10) CONNECTOR COVER END PLATE

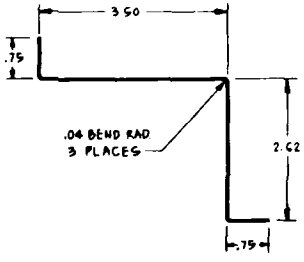


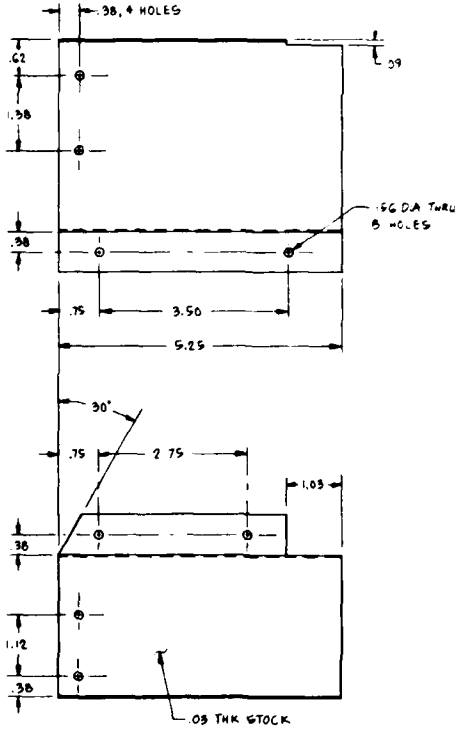


(-11) CONNECTOR COVER

| SIZE | FSCM NUMBER | DRAWING NUMBER |
|---|---|---|
| D | 55910 | C103553 |
| SCALE | | SHEET |

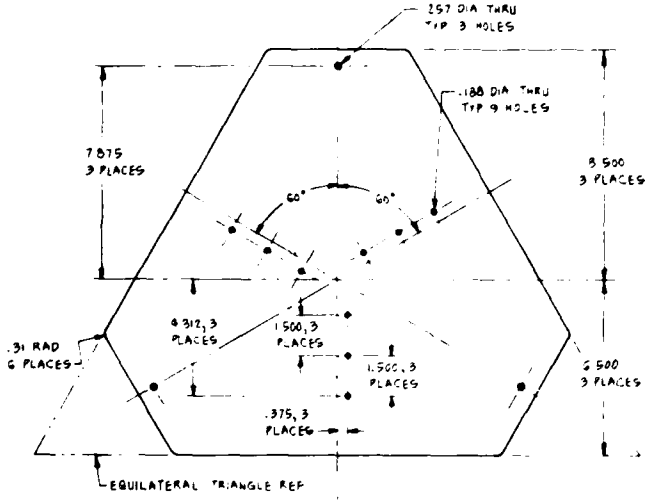


(-12) HATCH
SCALE: 1/2

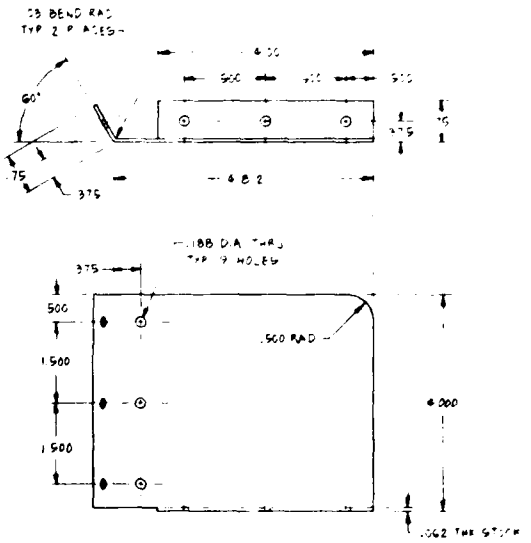


(-13) HATCH COMPARTMENT PLATE
SCALE 1/1

| SIZE | FSCM NUMBER | DRAWING NUMBER |
|---|---|---|
| D | 55910 | 103553 |

SCALE NOTED

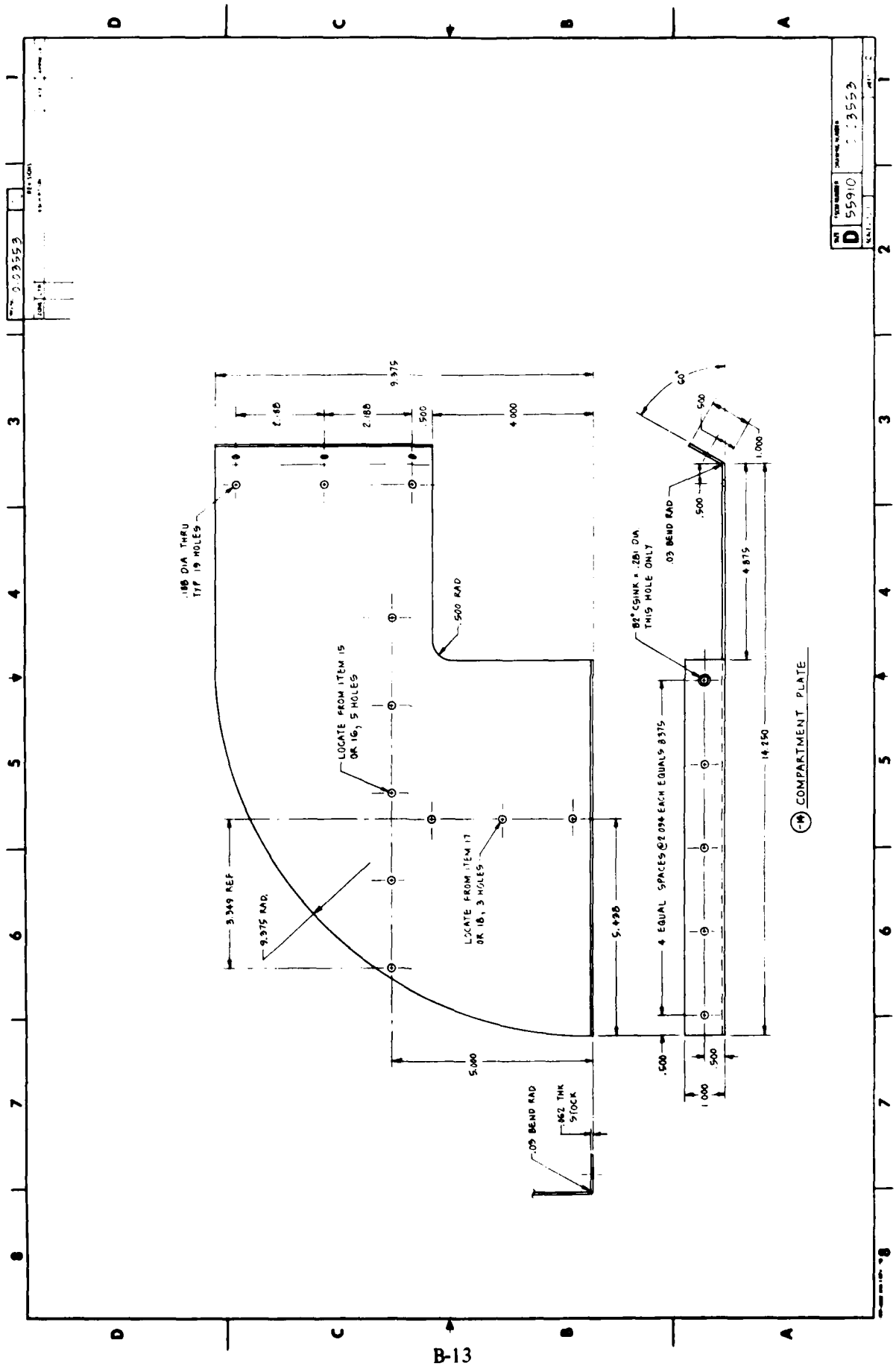

.188 DIA THRU
TYP 19 HOLES
LOCATE FROM ITEM 15
OR 16, 5 HOLES
LOCATE FROM ITEM 17
OR 18, 3 HOLES
.500 RAD
3.349 REF
9.375 RAD.
5.438
5.000
.09 BEND RAD
.062 THK
STOCK
9.375
2.188
2.188
.500
4.000
82° CSINK x .281 DIA
THIS HOLE ONLY
.03 BEND RAD
4 EQUAL SPACES @ 2.094 EACH EQUALS 8.375
4.875
14.250
1.000
.500
.500
.500
1.000
60°
-14 COMPARTMENT PLATE
D 55910

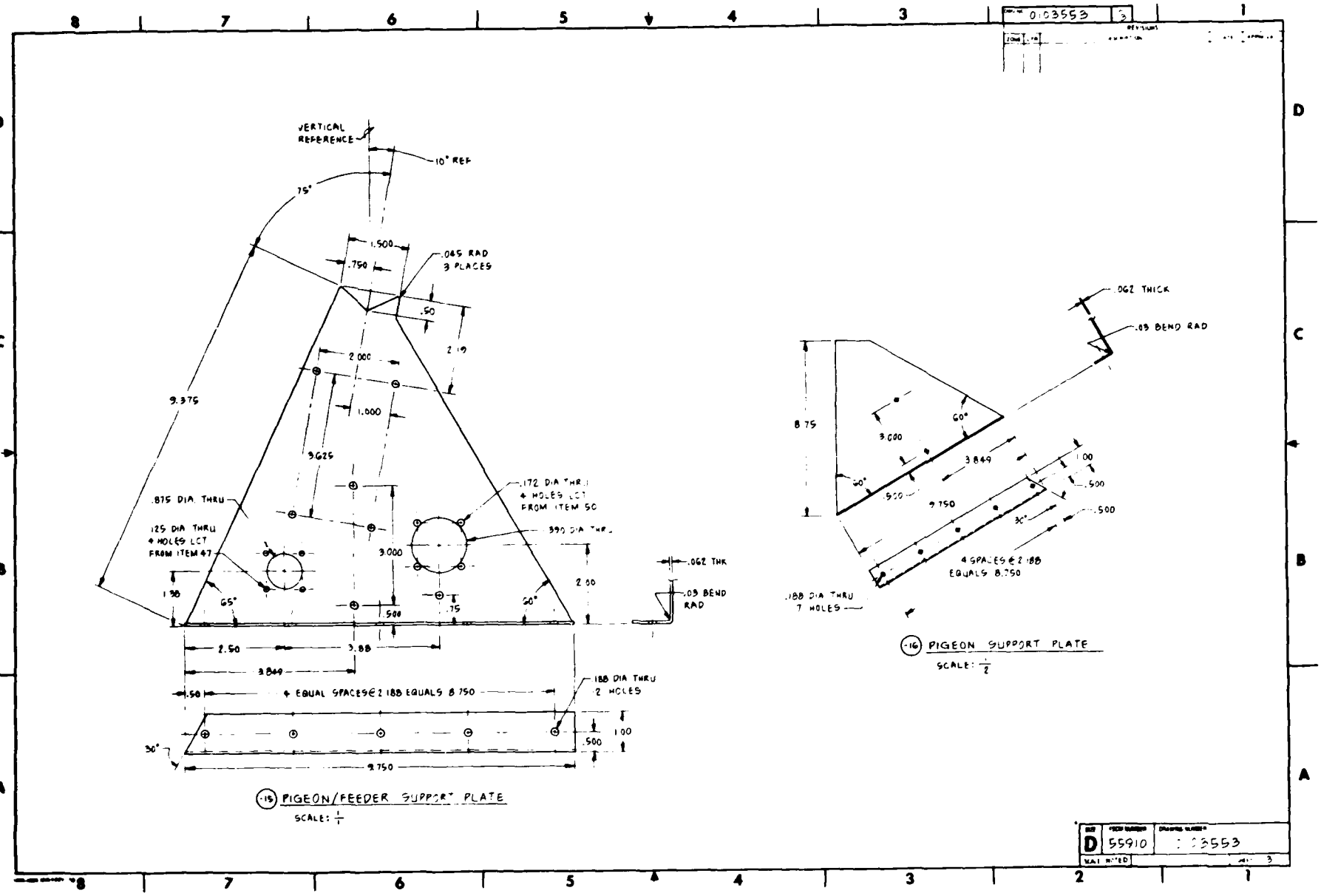

VERTICAL REFERENCE
10° REF
75°
1.500
.750
.045 RAD 3 PLACES
.50
2.19
2.000
1.000
9.375
3.625
.875 DIA THRU
.125 DIA THRU 4 HOLES LCT FROM ITEM 47
.172 DIA THRU 4 HOLES LCT FROM ITEM 50
.390 DIA THRU
3.000
1.38
65°
.500
.75
60°
2.00
.062 THK
.03 BEND RAD
2.50
3.88
3.849
.50
4 EQUAL SPACES @ 2.188 EQUALS 8.750
.188 DIA THRU 2 HOLES
1.00
.500
30°
9.750
-15 PIGEON/FEEDER SUPPORT PLATE
SCALE: 1/1
.062 THICK
.03 BEND RAD
8.75
3.000
60°
3.849
1.00
.500
9.750
30°
4 SPACES @ 2.188 EQUALS 8.750
.188 DIA THRU 7 HOLES
-16 PIGEON SUPPORT PLATE
SCALE: 1/2
D
55910

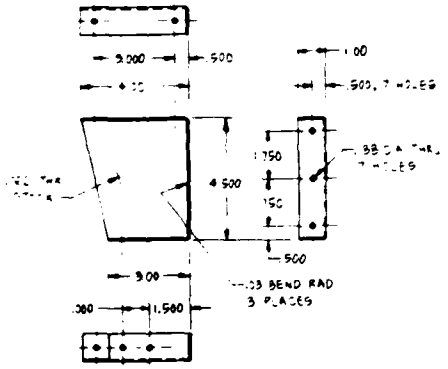


(-17) VERTICAL SUPPORT (FEEDER)
SCALE: 1/2

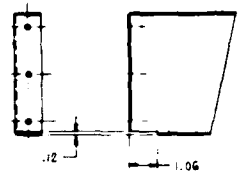


(-18) VERTICAL SUPPORT
OTHERWISE OPPOSITE OF ITEM -17
SCALE: 1/2

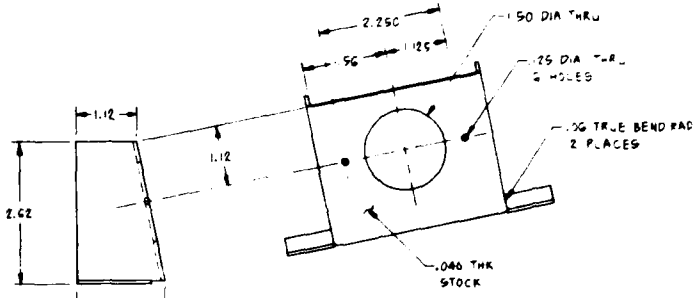


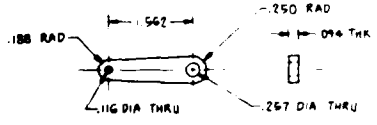


(-20) MOTOR ARM
SCALE: 1/1

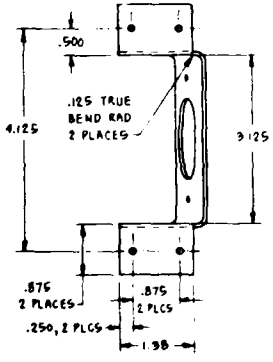


(-19) PECK KEY HOLDER
SCALE: 1/1

| SIZE | FSCM NUMBER | DRAWING NUMBER |
|---|---|---|
| D | 55910 | 103553 |
| SCALE NOTED | | |

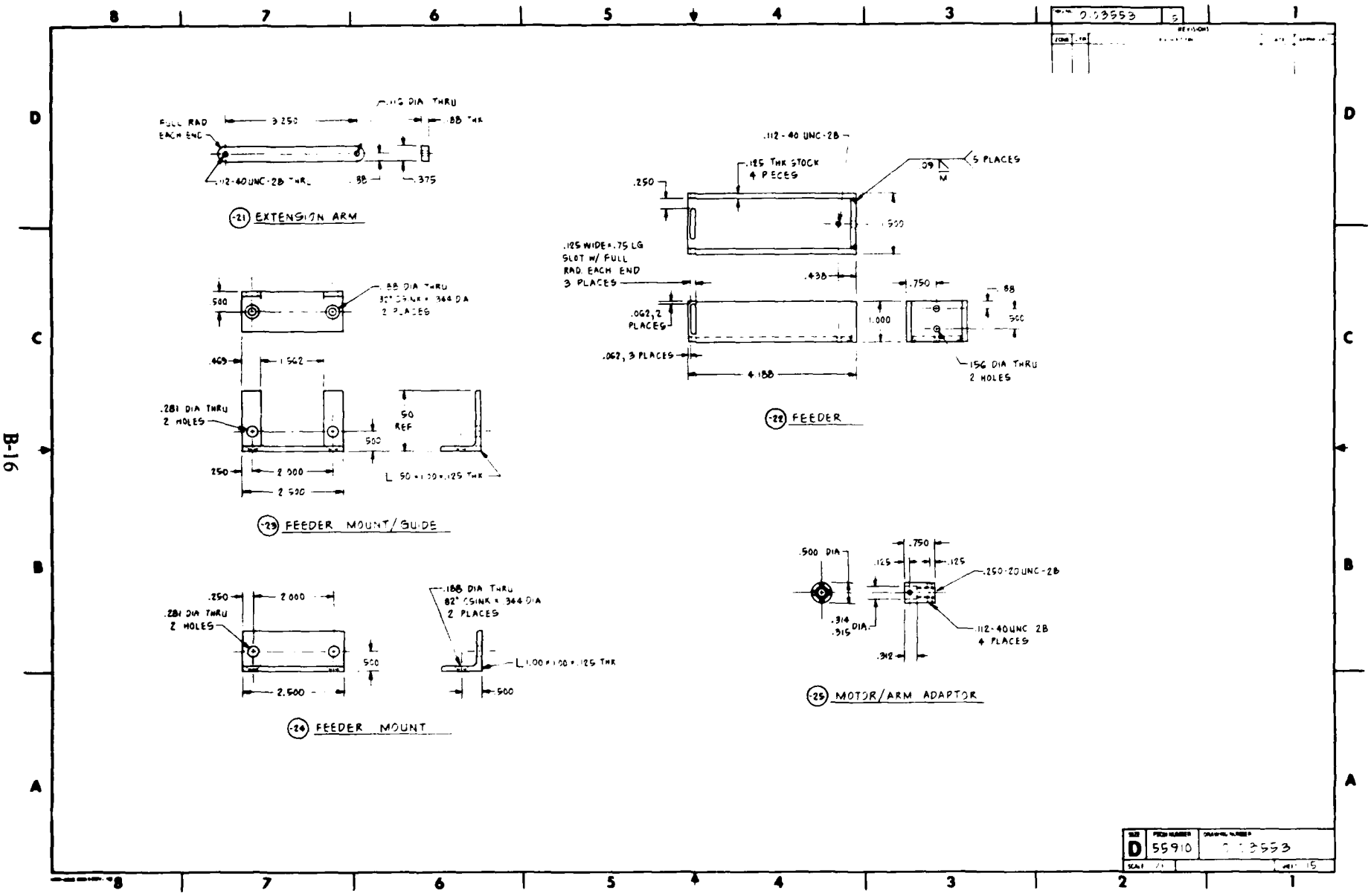

FULL RAD EACH END
3.250
.88 THK
.112-40 UNC-2B THRU
.88
.375
-21 EXTENSION ARM
.500
.469
1.562
.281 DIA THRU 2 HOLES
.50 REF
.500
.250
2.000
2.500
-23 FEEDER MOUNT/GUIDE
.250
2.000
.281 DIA THRU 2 HOLES
.500
2.500
.188 DIA THRU 82° CSINK x .344 DIA 2 PLACES
L 1.00 x 1.00 x .125 THK
.500
-24 FEEDER MOUNT
.112-40 UNC-2B
.125 THK STOCK 4 PIECES
.09 M
5 PLACES
.250
1.500
.125 WIDE x .75 LG SLOT W/ FULL RAD. EACH END 3 PLACES
.438
.750
.88
.062, 2 PLACES
1.000
.500
.062, 3 PLACES
4.188
.156 DIA THRU 2 HOLES
-22 FEEDER
.500 DIA
.750
.125
.125
.250-20 UNC-2B
.314 .315 DIA.
.112-40 UNC 2B 4 PLACES
.312
-25 MOTOR/ARM ADAPTOR
D 55910

0103553

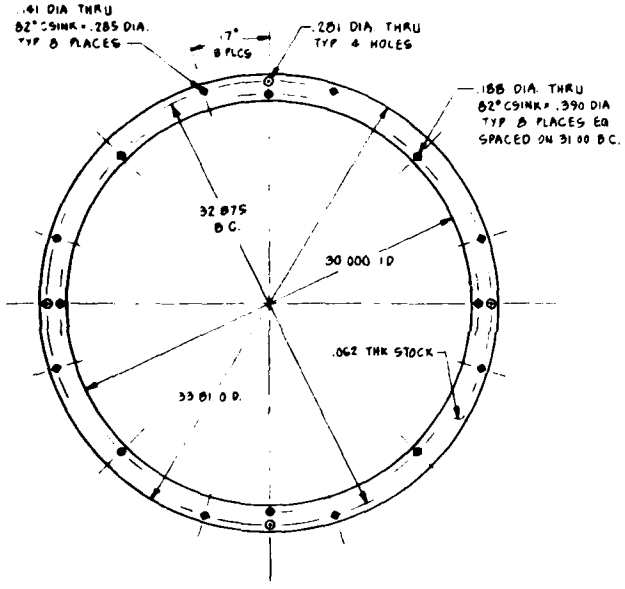


(26) WINDOW FRAME - TOP

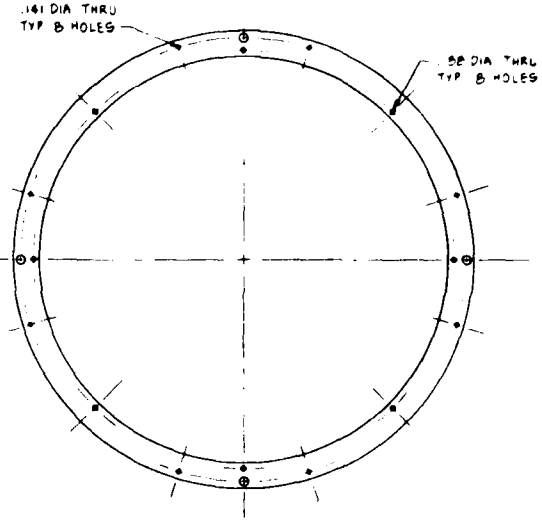


(27) WINDOW FRAME - BOTTOM

OTHERWISE SHAPE AND HOLE LOCATION SAME AS ITEM 26

| SIZE | FSCM NUMBER | DRAWING NUMBER |
|---|---|---|
| D | 55910 | 0103553 |

SCALE 1/4

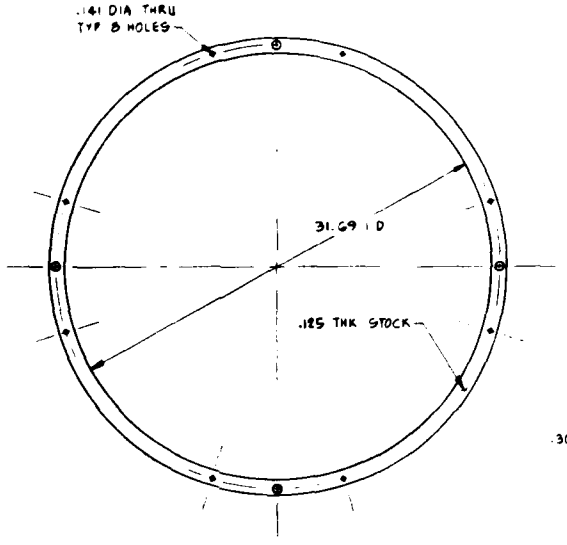


(-28) WINDOW FRAME - CENTER
OTHERWISE SHAPE AND HOLE LOCATION SAME AS ITEM 26
SCALE: 1/4

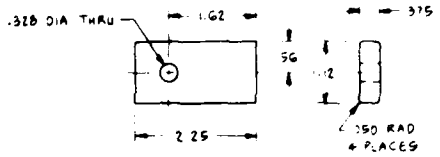


(-29) MOUNT, REAR, SWIVEL
SCALE 1/1

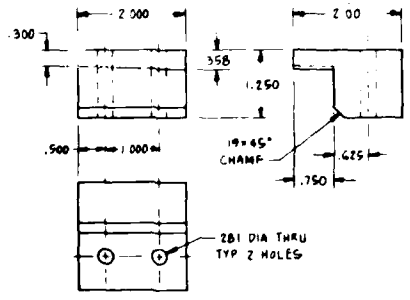


(-31) MOUNT, FWD - STBD
SCALE 1/1

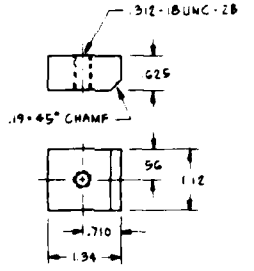


(-30) MOUNT, REAR, STATIONARY
SCALE 1/1

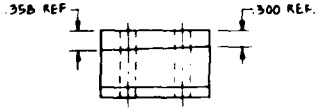


(-32) MOUNT, FWD - PORT
OPPOSITE HAND OF ITEM 31
SCALE: 1/1

| SIZE | FSCM NUMBER | DRAWING NUMBER |
|---|---|---|
| D | 55910 | D 03553 |
| SCALE NONE | | WEIGHT |

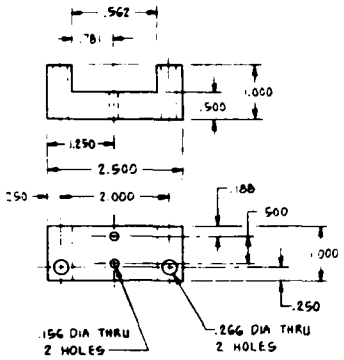


(-39) FEEDER GUIDE BLOCK
SCALE: 1/1

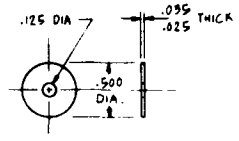


(-34) BEARING WASHER
SCALE: 2/1

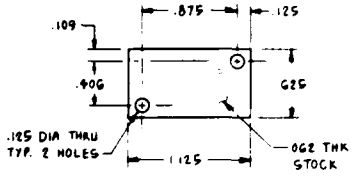


(-35) LIMIT SWITCH SPACER
SCALE: 2/1

| DASH NO. | DIM A1 | DIM B3 |
|---|---|---|
| -36 | 1.250 | 1.500 |
| -37 | .750 | 1.500 |
| -38 | 750 | 8.00 |
| -39 | 1.00 | 14.88 |

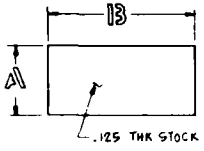


PADDING
NO SCALE

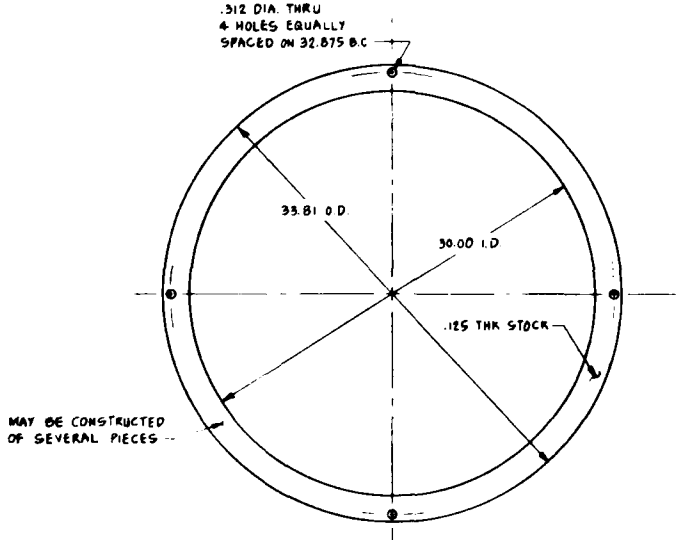


(-40) PADDING, WINDOW
SCALE 1/4

| SIZE | FSCM NUMBER | DRAWING NUMBER |
|---|---|---|
| D | 55910 | 0103553 |
| SCALE NOTED | | SHEET B |

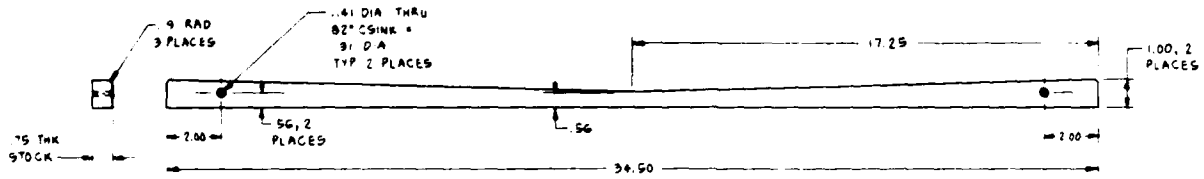


(-41) CONTOUR EDGING, TAPERED

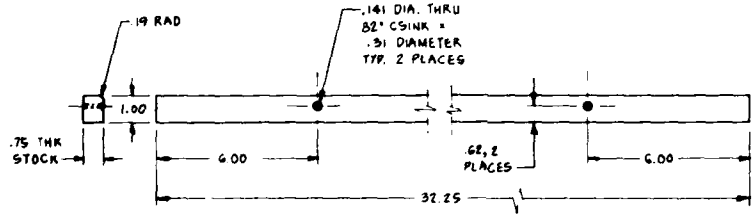


(-42) CONTOUR EDGING, STRAIGHT

| SIZE | PROD NUMBER | DRAWING NUMBER |
|---|---|---|
| D | 55910 | 0103553 |
| SCALE | | SHEET 19 |

NOTES

AFTER FORMING, WINDOW SHALL BE FREE OF SCRATCHES, LOCS OR DISTORTIONS THAT MAY CAUSE ANY VISUAL DISTRACTIONS OR OBSTRUCTIONS

2 STOCK MATERIAL PRIOR TO FORMING SHALL CONFORM TO MIL-P-5425, FINISH A

3 WINDOW FLANGE TO BE TRIMMED DOWN TO THIS DIAMETER AFTER FORMING

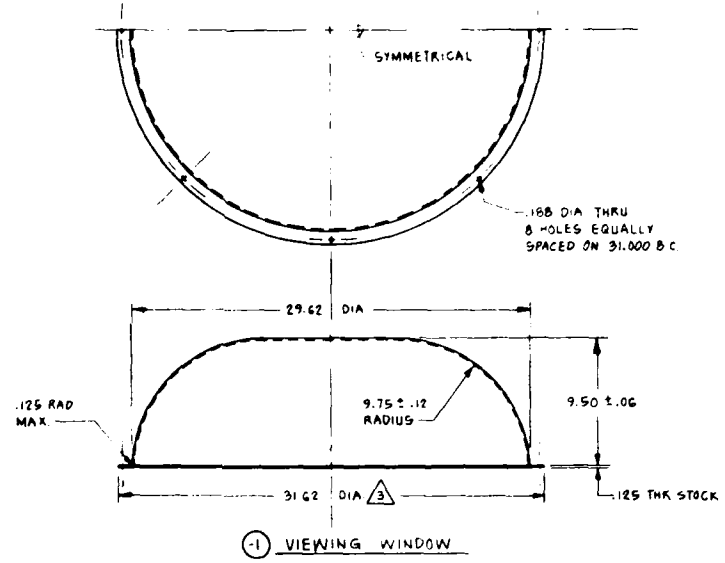


-1 VIEWING WINDOW

SPECIFICATION CONTROL DRAWING

| QTY | REQ | FSCM NO | PART OR IDENTIFYING NUMBER | DESCRIPTION OR NOMENCLATURE | MATERIAL / SPEC / REF DESIG | ITEM NO |
|---|---|---|---|---|---|---|
| | | | -1 | VIEWING WINDOW | 2 | 1 |

PARTS LIST

| | | |
|---|---|---|
| | COWLEY INC<br>BLDG 170<br>MOJAVE AIRPORT<br>MOJAVE, CA 93501 | CI 1000 |
| FSCM | SUPPLIER | PART IDENT NO |
| SUGGESTED SOURCE OF SUPPLY | | |

| NEXT ASSY | USED ON |
|---|---|
| | 0103553 |
| APPLICATION | |

INTERPRET DRAWING IN ACCORDANCE WITH MIL STD 100

DO NOT SCALE THIS DRAWING

UNLESS OTHERWISE SPECIFIED DIMENSIONS ARE IN INCHES
BREAK ALL EDGES .015 MAX
REMOVE ALL BURRS
TOLERANCES ARE
XX ± .03 XXX ± .010
ANGLES ± –
FILLETS – MAX
SURFACE ROUGHNESS 125

RELEASED DATE

APPROVED
APPROVED
CHECKED
PREPARED R SUGIYAMA 010496
PROJECT NUMBER
COGNIZANT CODE
APPROVED FOR
BY DIRECTION

NAVAL OCEAN SYSTEMS CENTER
SAN DIEGO CA 92152

VIEWING WINDOW
PIGEON FLIGHT CONTAINER

SIZE D | FSCM NUMBER 55910 | DRAWING NUMBER 0103553

SCALE 1/4 | UNIT WT | SHEET 1 OF 1

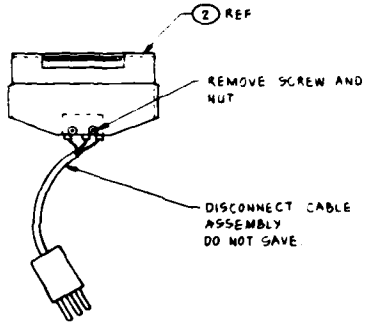


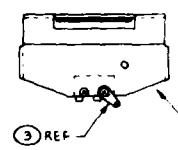


INSTALL THE FOLLOWING:
MS35431-1, TERMINAL
EXISTING ATTACHING HARDWARE (SCREW AND NUT)

REMOVE IDENTIFYING LABEL FROM OTHER SIDE AND REIDENTIFY WITH 0103654-1

-1 PECK KEY (MOD)

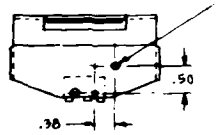


| | | | | |
|---|---|---|---|---|
| 1 | | | CABLE ASSEMBLY | |
| DELETION PARTS LIST | | | | |

| | | | | |
|---|---|---|---|---|
| 2 | | | NUT | NO REWORK |
| 1 | | | SCREW | NO REWORK |
| ITEMS REWORKED AND/OR REUSED | | | | |

MODIFICATION DRAWING

| QTY | REQ | FSCM NO. | PART OR IDENTIFYING NUMBER | DESCRIPTION OR NOMENCLATURE | MATERIAL/SPEC/REF DESG | ITEM NO |
|---|---|---|---|---|---|---|
| | 1 | | MS35431-1 | TERMINAL, LUG | MIL-T-15659 | 3 |
| | 1 | 15273 | PPK-001 (212-17) | PECKING KEY | TECH SERV INC BRS/LVE DIV 5301 HOLLAND DR BELTSVILLE, MD 20705 | 2 |
| | - | | -1 | PECK KEY (MOD) | MAKE FROM ITEM 2 | 1 |

PARTS LIST

| | |
|---|---|
| NEXT ASSY | USED ON |
| | 0103553 |
| APPLICATION | |

INTERPRET DRAWING IN ACCORDANCE WITH MIL STD 100

DO NOT SCALE THIS DRAWING

UNLESS OTHERWISE SPECIFIED DIMENSIONS ARE IN INCHES
BREAK ALL EDGES .15 MAX
REMOVE ALL BURRS
TOLERANCES ARE
XX ± .03 XXX ± .010
ANGLES ± -
FILLETS - MAX
SURFACE ROUGHNESS -

RELEASED DATE

APPROVED
APPROVED
CHECKED
PREPARED R. SUGIYAMA R. DAHG
PROJECT NUMBER
COORDINATE CODE
APPROVED FOR
BY DIRECTION

NAVAL OCEAN SYSTEMS CENTER
SAN DIEGO CA 92152

PECK KEY
PIGEON FLIGHT CONTAINER

SIZE D | FSCM NUMBER 55910 | DRAWING NUMBER 0103254

SCALE 1/1 | UNIT WT | SHEET 1 OF 1

NOTES

1. NORTH AMERICAN PHILIPS CORP
   SAL SNT DIVISION
   203 HARRISON PL
   BROOKLYN, NY 11237

2. GULTON INDUSTRIES INC
   MEASUREMENT AND CONTROL SYSTEMS DIV
   GULTON INDUSTRIAL PARK
   EAST GREENWICH, RI 02818

| ITEM NO | QTY | REQD | PART OR IDENTIFYING NUMBER | DESCRIPTION OR NOMENCLATURE | MATERIAL / SPEC / REF DESG |
|---|---|---|---|---|---|
| 22 | 1 | | F02B-25V3AS | FUSE | MIL-F-15160 |
| 21 | 1 | | FHN26G1 | FUSEHOLDER | MIL-F-9277/6 |
| 20 | | | MS3102A-28-21S | CONNECTOR | MIL-C-5015 |
| 19 | 1 | 15057 | 292-B, 24 VDC | RECORDER, GRAPH | 2 |
| 18 | 1 | 37942 | JJ034 | JACK, TELEPHONE | MALLORY, PR AND COMPANY INC 3029 E WASHINGTON INDIANAPOLIS, IN 46206 |
| 17 | 1 | | | DISPLAY, RESPONSE | |
| 16 | 3 | | | DISPLAY, COUNTER | |
| 15 | 9 | | MS25237-8918 | LAMP, INCANDESCENT | |
| 14 | 2 | | MS25237-327 | LAMP, INCANDESCENT | |
| 13 | 3 | 72619 | 101-3830-0972-201 | HOLDER, LAMP, GREEN | 1 |
| 12 | 3 | 72619 | 101-3830-0971-201 | HOLDER, LAMP, RED | 1 |
| 11 | 1 | | MS25224-2 | GUARD, SWITCH | MIL-G-7703 |
| 10 | 3 | 72619 | 186-1872 | LENS, SWITCH, SQUARE | 1 |
| 9 | 2 | 72619 | 183-1471 | LENS, SWITCH, CYLINDER | 1 |
| 8 | 3 | | MS35059-23 | SWITCH, FEEDER | MIL-S-83731 |
| 7 | 1 | | MS35059-22 | , MAIN POWER | MIL-S-83731 |
| 6 | 1 | 95146 | MPG-20GR | , DETECT | ALCO ELECTRONIC PRODUCTS INC 1551 OSGOOD ST NORTH ANDOVER, MA 01845 |
| 5 | 1 | 95146 | MPG-10GF | , COUNTERS | |
| 4 | 3 | 72619 | 513-1401-G04 | , BODY | 1 |
| 3 | 2 | 72619 | 513-0601-G04 | SWITCH, BODY | 1 |
| 2 | 1 | | | BOX, HOUSING | |
| 1 | - | | -1 | CONTROL BOX | |

PARTS LIST

| REV | REV STATUS |
|---|---|
| 2 | SHEET 1 OF 2 |

NEXT ASSY 0103553 USED ON

APPLICATION

INTERPRET DRAWING IN ACCORDANCE WITH MIL STD 100

DO NOT SCALE THIS DRAWING

UNLESS OTHERWISE SPECIFIED DIMENSIONS ARE IN INCHES
BREAK ALL EDGES — MAX
REMOVE ALL BURRS
TOLERANCES ARE
.XX ± .03 .XXX ± —
ANGLES ± —
FILLETS — MAX
SURFACE ROUGHNESS —

RELEASED DATE

APPROVED
APPROVED
CHECKED
PREPARED R SUGIYAMA 8/06/79
PROJECT NUMBER
COGNIZANT CODE
APPROVED FOR

NAVAL OCEAN SYSTEMS CENTER
SAN DIEGO CA 92152

CONTROL BOX

SIZE D | FSCM NUMBER 55910 | DRAWING NUMBER [illegible]

SCALE NONE | WT | SHEET 2 OF 2

B-23

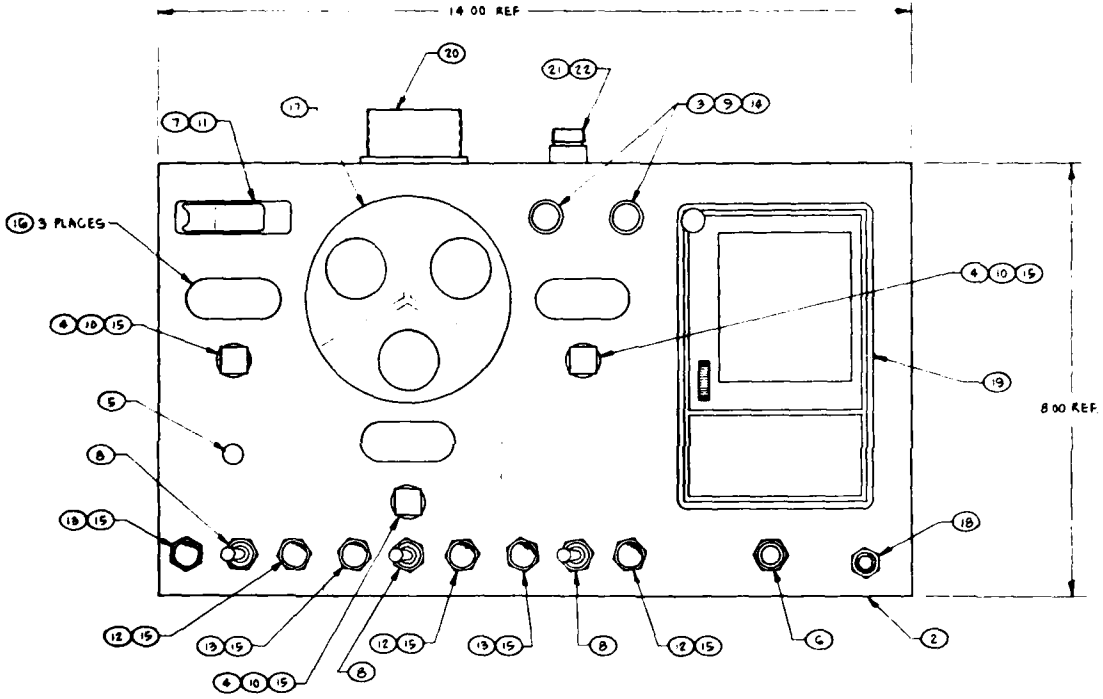


-1 CONTROL BOX

| SIZE | PART NUMBER | DRAWING NUMBER |
|---|---|---|
| D | 55910 | 103257 |

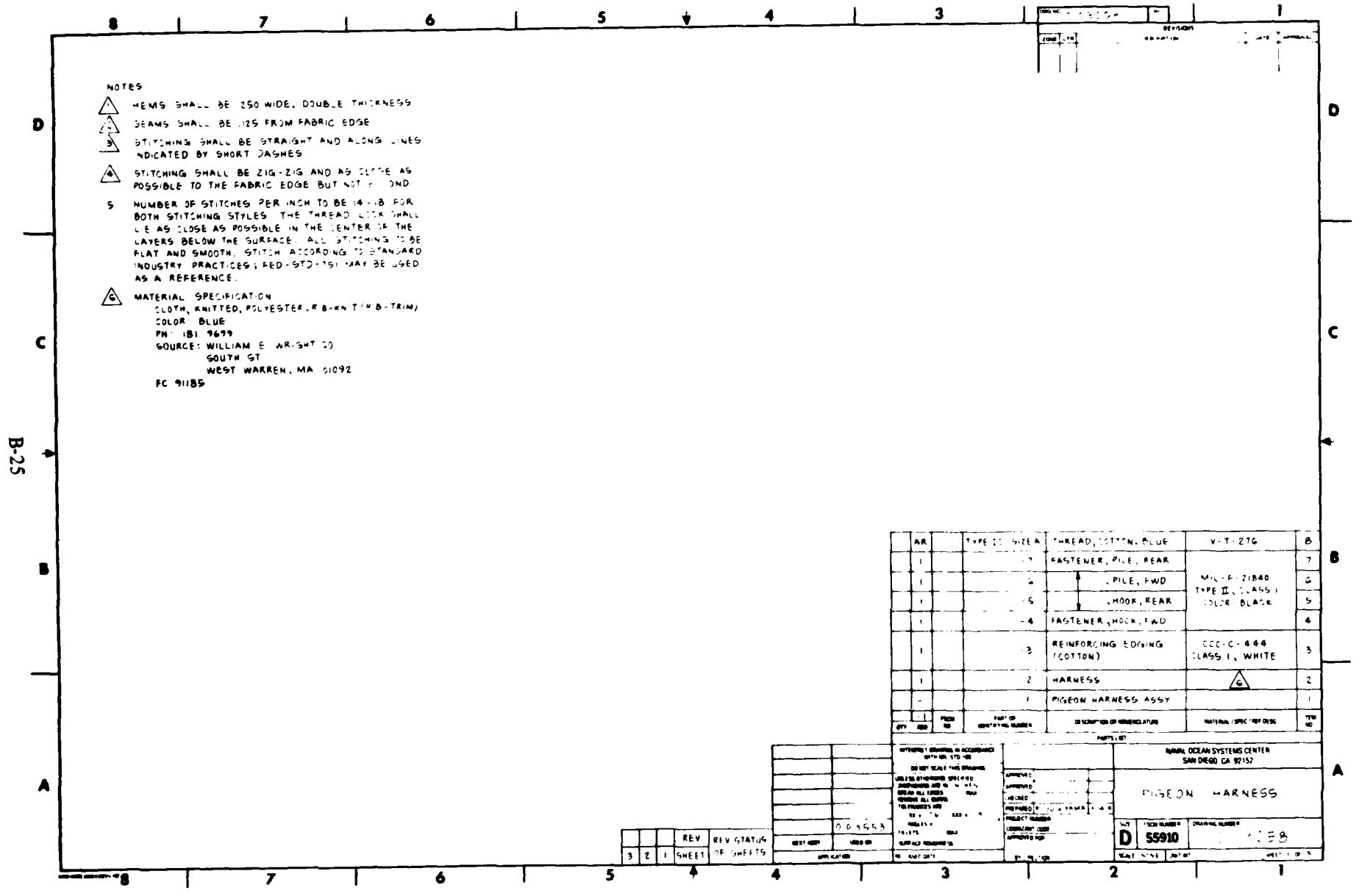

NOTES

1. HEMS SHALL BE .250 WIDE, DOUBLE THICKNESS
2. SEAMS SHALL BE .125 FROM FABRIC EDGE
3. STITCHING SHALL BE STRAIGHT AND ALONG LINES INDICATED BY SHORT DASHES
4. STITCHING SHALL BE ZIG-ZIG AND AS CLOSE AS POSSIBLE TO THE FABRIC EDGE BUT NOT BEYOND
5. NUMBER OF STITCHES PER INCH TO BE 14-18 FOR BOTH STITCHING STYLES. THE THREAD LOCK SHALL LIE AS CLOSE AS POSSIBLE IN THE CENTER OF THE LAYERS BELOW THE SURFACE. ALL STITCHING TO BE FLAT AND SMOOTH. STITCH ACCORDING TO STANDARD INDUSTRY PRACTICES; FED-STD-751 MAY BE USED AS A REFERENCE.
6. MATERIAL SPECIFICATION
   CLOTH, KNITTED, POLYESTER, RIB-KNIT (RIB-TRIM)
   COLOR: BLUE
   PN: 181 9699
   SOURCE: WILLIAM E. WRIGHT CO
   SOUTH ST
   WEST WARREN, MA 01092
   FC 91185

| QTY | REQD | FROM | PART OR IDENTIFYING NUMBER | DESCRIPTION OR NOMENCLATURE | MATERIAL / SPEC / REF DESG | ITEM NO |
|---|---|---|---|---|---|---|
| | AR | | TYPE IC SIZE A | THREAD, COTTON, BLUE | V-T-276 | 8 |
| | 1 | | -7 | FASTENER, PILE, REAR | MIL-F-21840 TYPE II, CLASS I COLOR: BLACK | 7 |
| | 1 | | -6 | , PILE, FWD | | 6 |
| | 1 | | -5 | , HOOK, REAR | | 5 |
| | 1 | | -4 | FASTENER, HOOK, FWD | | 4 |
| | 1 | | -3 | REINFORCING EDGING (COTTON) | CCC-C-444 CLASS I, WHITE | 3 |
| | 1 | | -2 | HARNESS | 6 | 2 |
| | - | | -1 | PIGEON HARNESS ASSY | | 1 |

PARTS LIST

| REV | REV STATUS OF SHEETS |
|---|---|
| 3 2 1 SHEET | |

0 0 3553

NAVAL OCEAN SYSTEMS CENTER
SAN DIEGO CA 92152

PIGEON HARNESS

D 55910

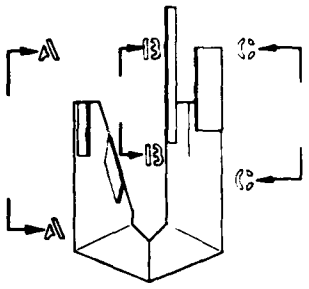

FRONT VIEW

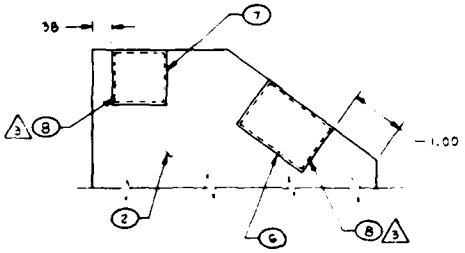


VIEW A-A

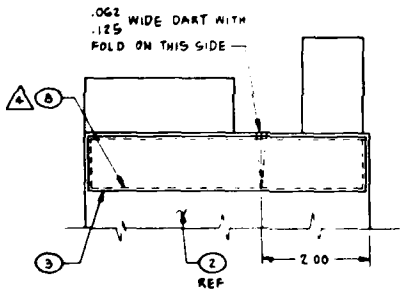


VIEW B-B

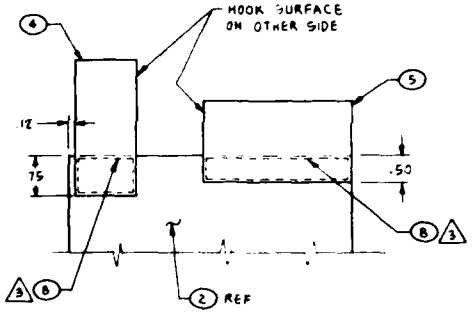


VIEW C-C

(-1) PIGEON HARNESS ASSEMBLY

| SIZE | FSCM NO. | DRAWING NO. |
|---|---|---|
| D | 55910 | 203-58 |
| SCALE | REV | SHEET |

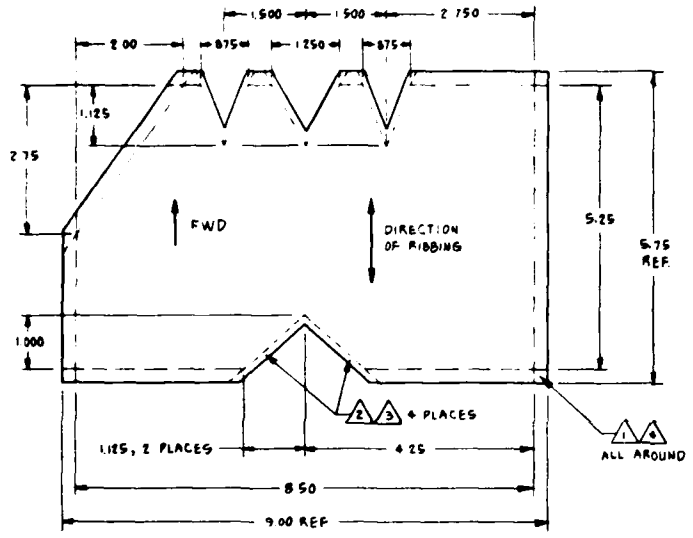


(-2) HARNESS
SCALE 1/1

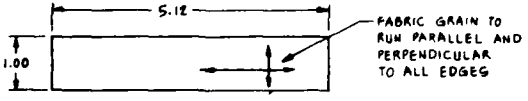


(-3) REINFORCING EDGING
SCALE 1/1

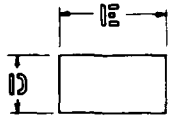

| DASH NO | DESCRIPTION | DIM D | DIM W |
|---|---|---|---|
| -4 | HOOK, FWD | 1.125 | 2.500 |
| -5 | HOOK, REAR | 1.500 | 2.750 |
| -6 | PILE, FWD | 1.000 | 1.500 |
| -7 | PILE, REAR | 1.000 | 1.000 |

FASTENER, HOOK AND PILE
NO SCALE

| SIZE | PIECE NUMBER | DRAWING NUMBER |
|---|---|---|
| D | 55910 | 2103658 |

SCALE NOTED | REV. LTR | SHT 3

NOTE

△ MANUFACTURE IN ACCORDANCE WITH MIL-P-25421, TYPE I, CLASS I LAMINATE, CLOTH BASE NO. 181 MOLD FOR CAVITY SHALL BE GOVERNMENT FURNISHED. DRAWING DETAIL SHOWS MATERIAL CONSTRAINTS AND MACHINING AFTER CURING IS COMPLETE

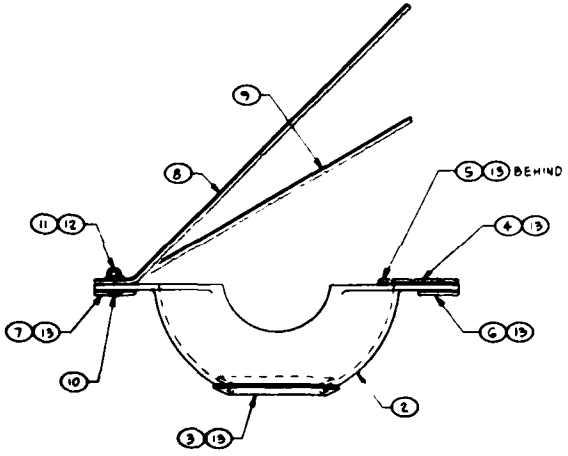


(-1) PIGEON CARRIER ASSEMBLY

| QTY | REQ | FSCM NO | PART OR IDENTIFYING NUMBER | DESCRIPTION OR NOMENCLATURE | MATERIAL / SPEC / REF DESG | ITEM NO |
|---|---|---|---|---|---|---|
| | AR | | TYPE I | ADHESIVE, CONTACT | MMM-A-130 | 13 |
| | 2 | | MS15795-804 | WASHER, FLAT | FF-W-92 | 12 |
| | 2 | | MS17830-04C | NUT, SELF-LOCKING | MIL-N-25027 | 11 |
| | 2 | | MS51957-15 | SCREW, PAN HEAD | FF-S-92 | 10 |
| | 1 | | -9 | FASTENER, PILE, REAR | MIL-F-21840 TYPE II, CLASS I COLOR-BLACK | 9 |
| | 1 | | -8 | , FWD | | 8 |
| | 1 | | -7 | , STBD | | 7 |
| | 1 | | -6 | , PILE, PORT | | 6 |
| | 1 | | -5 | , HOOK, REAR | | 5 |
| | 1 | | -4 | FASTENER, HOOK, FWD | MIL-F-21840 TYPE II, CLASS I COLOR-BLACK | 4 |
| | 1 | | -3 | PADDING, OPENING | MIL-R-6130 TYPE II, GRADE A SOFT, SHEET | 3 |
| | 1 | | -2 | CARRIER | △1 | 2 |
| | - | | -1 | PIGEON CARRIER ASSEMBLY | | 1 |

PARTS LIST

| REV | SHEET | REV STATUS OF SHEETS |
|---|---|---|
| 2 | 1 | |

NEXT ASSY 0103553

APPLICATION

INTERPRET DRAWING IN ACCORDANCE WITH MIL STD 100

DO NOT SCALE THIS DRAWING

UNLESS OTHERWISE SPECIFIED DIMENSIONS ARE IN INCHES BREAK ALL EDGES .03 MAX REMOVE ALL BURRS TOLERANCES ARE XX ± .06 XXX ± .031 ANGLES ± — FILLETS — MAX SURFACE ROUGHNESS 125

RELEASED DATE

APPROVED
APPROVED
CHECKED
PREPARED R. SUGIYAMA 8/04/6
PROJECT NUMBER
COGNIZANT CODE
APPROVED FOR
BY DIRECTION

NAVAL OCEAN SYSTEMS CENTER
SAN DIEGO, CA 92152

PIGEON CARRIER

SIZE D | FSCM NUMBER 55910 | DRAWING NUMBER 0103660

SCALE 1/1 | UNIT WT | SHEET 1 OF 2

0103660 -2

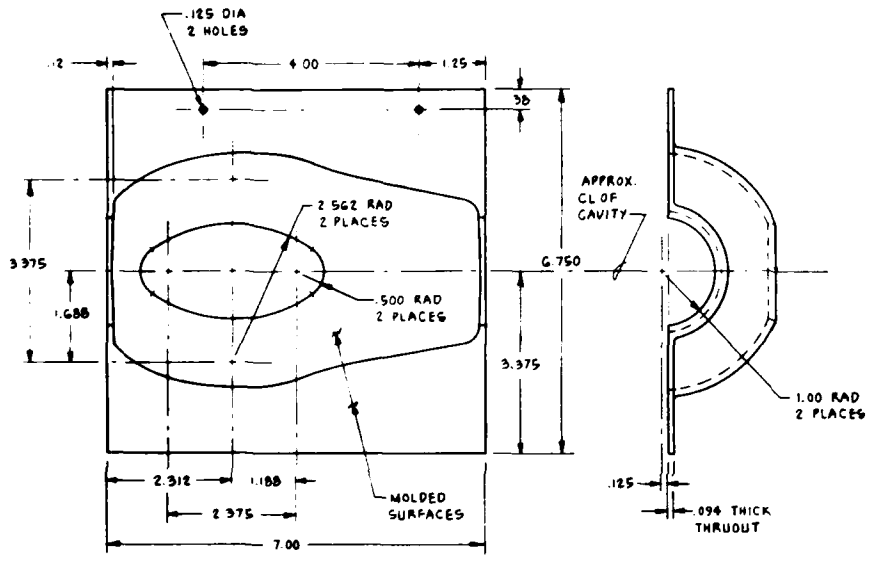


(-2) CARRIER

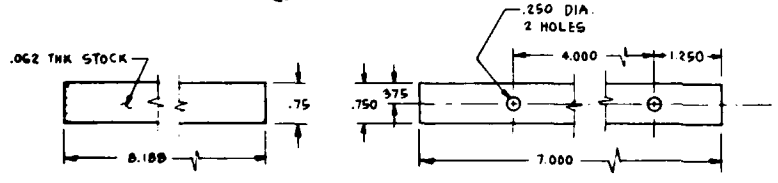


(-3) PADDING, OPENING

(-7) FASTENER, PILE, STBD

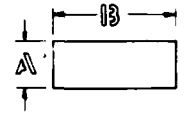


| DASH NO. | DESCRIPTION | DIM A1 | DIM B |
|---|---|---|---|
| -4 | HOOK, FWD | 1.250 | 2.000 |
| -5 | HOOK, REAR | 1.500 | 2.500 |
| -6 | PILE, PORT | .750 | 7.000 |

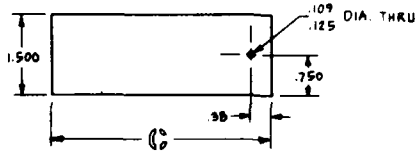


| DASH NO | DESCRIPTION | DIM C |
|---|---|---|
| -8 | PILE, FWD | 8.00 |
| -9 | PILE, REAR | 6.75 |

| SIZE | FSCM NUMBER | DRAWING NUMBER |
|---|---|---|
| D | 55910 | 0103660 |
| SCALE 1/1 | REV LTR | SHEET 2 |

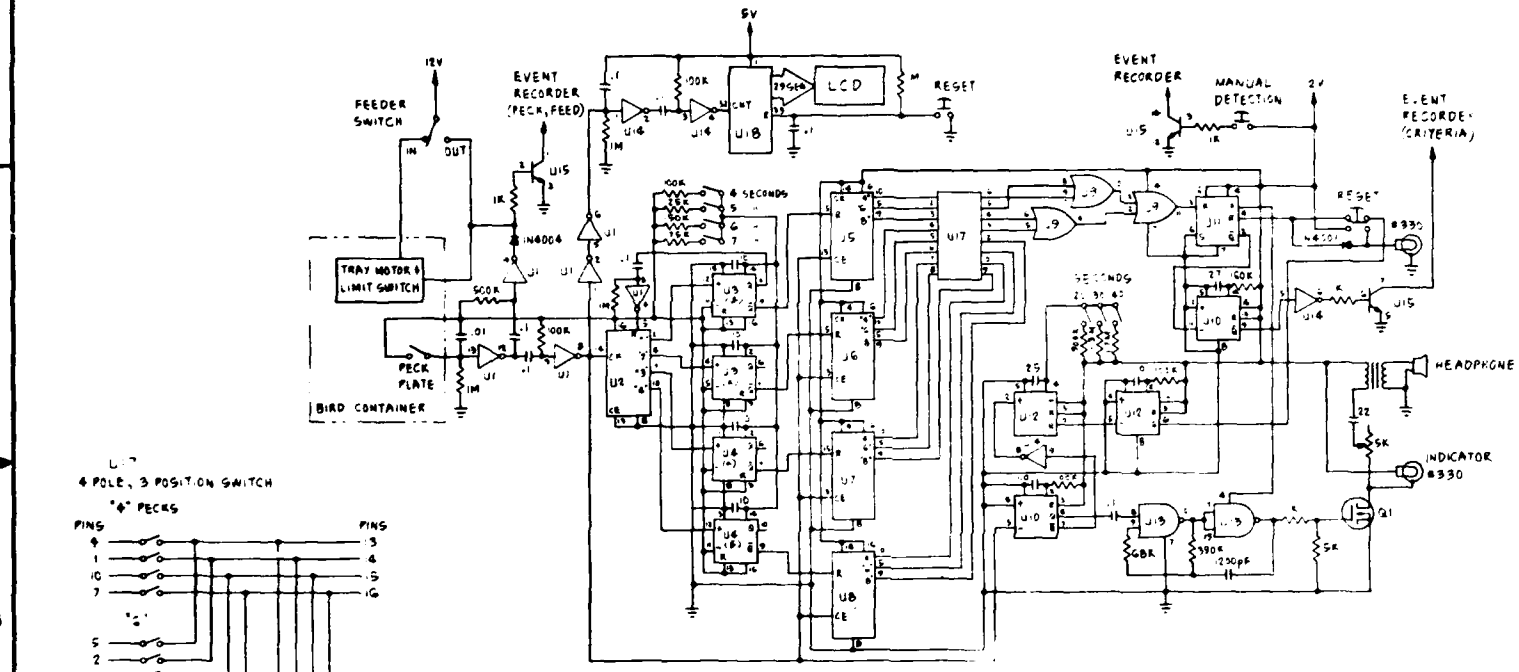


| | |
|---|---|
| U1 | 74C914 |
| U2 | CD4017 |
| U3 | MC14538 |
| U4 | " |
| U5 | CD4017 |
| U6 | " |
| U7 | " |
| U8 | " |
| U9 | CD4071 |
| U10 | MC14538 |
| U11 | CD4013 |
| U12 | MC14538 |
| U13 | CD4011 |
| U14 | MC14584 |
| U15 | CA 3138 |
| Q1 | 2N6661 |
| U17 | SOCKET TO SEL SW. |
| U18 | ICM7224 |
| LCD | HML 3909 |

| REVISIONS | | | | |
|---|---|---|---|---|
| ZONE | LTR | DESCRIPTION | DATE | APPROVED |

| QTY | REQ | FSCM NO | PART OR IDENTIFYING NUMBER | DESCRIPTION OR NOMENCLATURE | MATERIAL / SPEC / REV DESIG | ITEM NO |
|---|---|---|---|---|---|---|

PARTS LIST

INTERPRET DRAWING IN ACCORDANCE WITH MIL STD 100
DO NOT SCALE THIS DRAWING
UNLESS OTHERWISE SPECIFIED DIMENSIONS ARE IN
BREAK ALL EDGES MAX
REMOVE ALL BURRS
TOLERANCES ARE
.XX ±
.XXX ±
ANGLES ±
FINISH MAX
SURFACE ROUGHNESS

NEXT ASSY | USED ON

APPLICATION

DO NOT SCALE DRAWING

NAVAL OCEAN SYSTEMS CENTER
SAN DIEGO CA 92152

BIRD FLIGHT CONTAINER SCHEMATICS

| REV | REV STATUS |
|---|---|
| 2 | SHEET OF SHEETS |

D | 55910

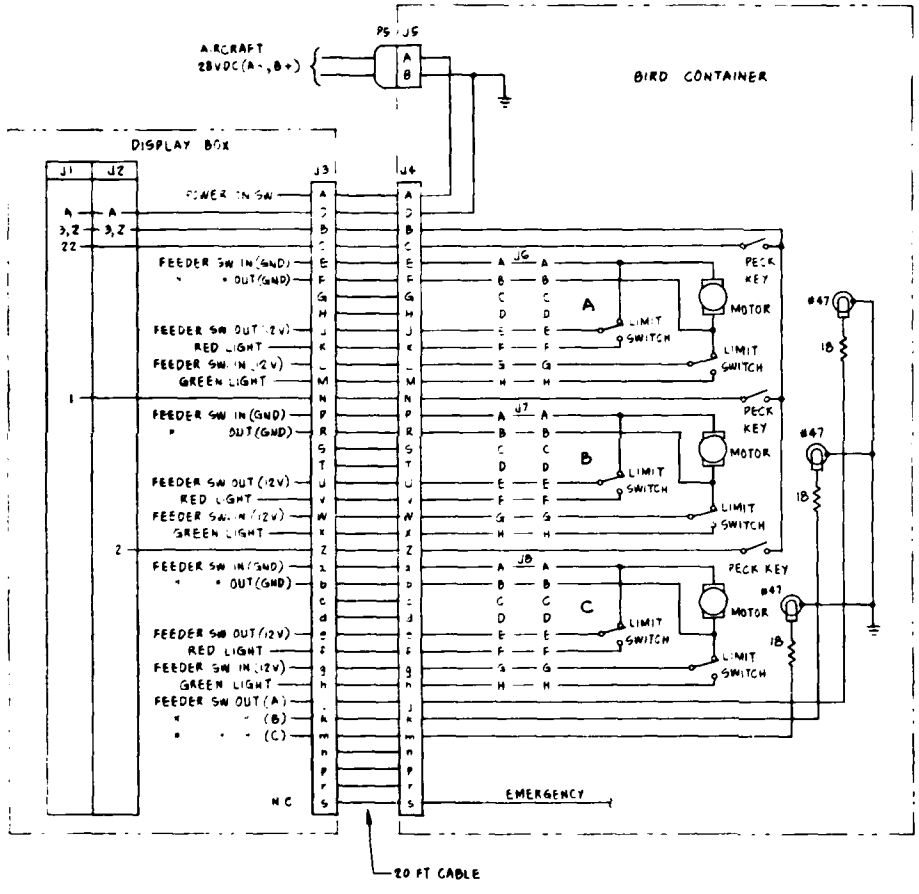


| | J1 | | J2 |
|---|---|---|---|
| 1 | PECK PLATE "B" | 1 | |
| 2 | J2 (B) | 2 | PECK PLATE "C" |
| 3 | +12V | 3 | +12V |
| 4 | RESET "B" | 4 | |
| 5 | RESET "B" | 5 | |
| 6 | HEADPHONE | 6 | |
| 7 | INDICATOR LIGHT "B" | 7 | |
| 8 | J2 (17) | 8 | RECORDER "C" CRITERIA |
| 9 | J2 (18) | 9 | HEADPHONE |
| 10 | J2 (19) | 10 | RESET "C" |
| 11 | RECORDER "B" PECK | 11 | INDICATOR LIGHT "C" |
| 12 | | 12 | J1 (J) |
| 13 | | 13 | |
| 14 | | 14 | |
| 15 | | 15 | |
| 16 | | 16 | J1 (E) |
| 17 | RESET "A" | 17 | J1 (B) |
| 18 | RESET "A" | 18 | J1 (9) |
| 19 | | 19 | J1 (10) |
| 20 | HEADPHONE | 20 | J1 (C) |
| 21 | INDICATOR LIGHT "A" | 21 | |
| 22 | PECK PLATE "A" | 22 | +28V |
| A | GND | A | GND |
| B | | B | J1 (2) |
| C | J2 (20) | C | RECORDER "C" PECKS |
| D | J2 (V) | D | |
| E | J2 (16) | E | |
| F | J2 (X) | F | |
| H | J2 (W) | H | |
| J | J2 (12) | J | RESET "C" |
| K | | K | LCD "A" |
| L | J2 (P) | L | LCD "B" |
| M | RECORDER "A" CRITERIA | M | LCD "C" |
| N | RECORDER "A" PECKS | N | +5V |
| P | | P | J1 (L) |
| R | | R | |
| S | | S | |
| T | | T | |
| U | | U | |
| V | | V | J1 (D) |
| W | | W | J1 (H) |
| X | | X | J1 (F) |
| Y | | Y | RECORDER "B" CRITERIA |
| Z | +12V | Z | +12V |

CONNECTORS IN DISPLAY BOX

| SIZE | FSCM NUMBER | DRAWING NUMBER |
|---|---|---|
| D | 55910 | 0103672 |
| SCALE NONE | REV LTR | SHEET 2 |

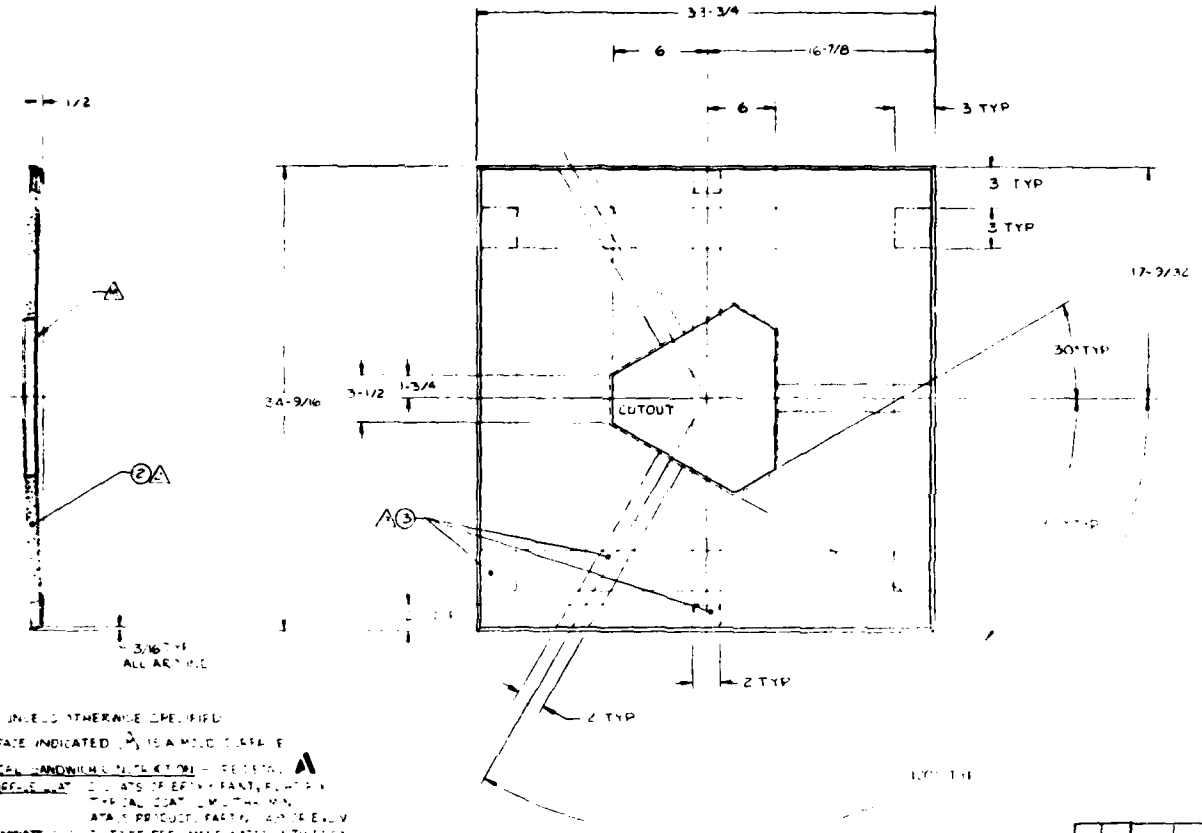


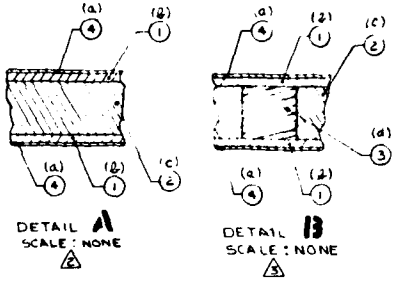


DETAIL A
SCALE: NONE
2

DETAIL B
SCALE: NONE
3

NOTES: UNLESS OTHERWISE SPECIFIED

1. SURFACE INDICATED ▽ IS A MOLD SURFACE

2. TYPICAL SANDWICH CONSTRUCTION - REFER TO A

(a) SURFACE COAT: ONE COAT OF EPOXY PAINT, FILLED
TYPICAL COAT THICKNESS
ATA'S PRODUCT, PARTS, OR EQUIV

LAMINATE: GLASS FREE MICROSPHERE FILLED WITH FIRE
BI-STAGED, VACUUM ASSIST AND PRESSURE
DEFUSED HEAT CURE AT ELEVATED TEMP
OF 250° ± 25°, ATA OR EQUIV FIBERGLASS RESIN
TYPICAL LAMINATE THICKNESS 90 MIL

SKIN: TYPE I PER MIL-P-4
RESIN: TYPE I PER MIL-P-4
REINFORCEMENT: FIBERGLASS BY WEIGHT
TENSILE STRENGTH
COMPRESSIVE STRENGTH @ 75°F
FLEXURAL STRENGTH @ 75°F
COMPRESSIVE MODULUS @ 75°F
TENSILE MODULUS @ 75°F
BARCOL HARDNESS MIN

(c) CORE: GLASS FIBER WITH A VERTICAL AXIS SINEWAVE
CORRUGATION, ATA DEFINED, 5/4 1/2 OR EQUIV.

3. TYPICAL BONDED AREA - SEE DETAIL B

(1) POTTING COMPOUND: FILL ALL AREAS INDICATED AND WHERE VOIDS EXIST IN CORE WITH VOID FILLING SYNTATIC FOAM: EPOXY RESIN FILLED WITH MICROBALLOONS PER MIL-R-9300 ATA'S PTN0.FR7168 OR EQUIV

SPECIFICATION: DENSITY: 30 TO 32 LBS PER CU.FT.
COMPRESSIVE STRENGTH: 2000 P.S.I. @ 77°F
TENSILE SHEAR: 1000 P.S.I.

4. EXPOSED SHARP EDGES ARE NOT ACCEPTABLE. EDGES OF FIBERGLASS SHALL HAVE A 1/8 RAD MIN RADIUS.

| ITEM NO | QTY REQ | PART OR IDENTIFYING NUMBER | DESCRIPTION OR NOMENCLATURE | MATERIAL SPEC OR DESIG | REMARKS |
|---|---|---|---|---|---|
| AR | | 1909 | PAINT, EPOXY, GREY | ATA'S PRODUCT, PARTS, OR EQUIV | |
| AR | | 7176A B | COMPOUND, POTTING, SYNTACTIC | | |
| AR | | CR 64-2 | CORE, COATED FABRIC (THK | ATA DEFINED, 5/4 1/2 RENTON WASH OR EQUIV | |
| AR | | FR [illegible] | CLOTH, FIBERGLASS | | |

PARTS LIST

UNLESS OTHERWISE SPECIFIED DIMENSIONS ARE IN INCHES
BREAK ALL EDGES 1/16 MAX
REMOVE ALL BURRS
TOLERANCES ARE
X ±1/32
ANGLES ± 1°
FILLETS 1/8 MAX
SURFACE ROUGHNESS 63

NEXT ASSY | USED ON

APPLICATION

DO NOT SCALE THIS DRAWING

APPROVED
APPROVED
CHECKED
PREPARED
PROJECT NUMBER
CONTRACT CODE
APPROVED FOR

NAVAL OCEAN SYSTEMS CENTER
SAN DIEGO CA 92152

# PANEL
# HELICOPTER DECONTAMINATION CHAMBER

SIZE D | SS910 | SHEET 1 OF 1

SHICC

## APPENDIX C: SCHEDULES

Predetermined schedules were used to determine the interval of time separating the presentation of targets and the number of responses required of the pigeon in order to receive the food reinforcer on each trial. Although the very early phases of basic training used fixed schedules, the predominant type of schedules were variable, characterized by normal distribution of values with a mean value and unequal probabilities of occurrence. The selection of a value from the distribution was randomized. The probability of values occurring within the schedule was manipulated selectively in order to increase the highest value in the schedule without changing the mean of the schedule. A skewed distribution resulted, and after the subject had been exposed to the newer, higher requirement, the distribution was normalized with a higher mean. This technique was used particularly for increasing the average interval of time separating the presentation of a target, without reducing the total number of target presentations rapidly during the 2-hour training session. The mean and standard deviation of the target interval schedules are listed in the following chart in the sequence that they were used.

Schedule of Intervals between Target Presentations

| $\bar{x}$ (mins) | s (mins) | n | Range (mins) |
|---|---|---|---|
| 5.5 | 3.18 | 10 | 5-10 |
| 7.6 | 7.9 | 6 | 5-20 |
| 11.3 | 12.5 | 5 | 5-30 |
| 13.0 | 10.8 | 6 | 1-30 |
| 16.0 | 13.5 | 5 | 2-35 |
| 20.0 | 14.6 | 5 | 2-40 |
| 23.9 | 20.0 | 14 | 1-60 |
| 31.2 | 25.4 | 10 | 2-75 |

The mean and standard deviation of the variable ratio reinforcement schedules are listed below in the sequence that they were used.

Variable Ratio Reinforcement Schedules
(in number of responses)

| VR | Range | n | $\bar{x}$ | s |
|---|---|---|---|---|
| 10 | 5-15 | 7 | 10.0 | 4.43 |
| 15 | 5-25 | 8 | 15.0 | 7.31 |
| 20 | 5-35 | 8 | 20.6 | 11.78 |
| 25 | 5-45 | 8 | 24.3 | 13.51 |
| 30 | 10-50 | 7 | 30.0 | 13.23 |
| 40 | 15-65 | 7 | 40.0 | 18.26 |
| 50 | 2-75 | 10 | 50.0 | 25.0 |

## APPENDIX D: DETECTION CRITERIA

The detection criteria values that could be set by switches into the electronic circuits are presented in tabular form below. The values within the table are response rates, in pecks-per-second.

Detection Criteria Values

| Responses Required | Seconds Required | | | |
|---|---|---|---|---|
| | 4 | 5 | 6 | 7 |
| 4 | 1.0 | 0.8 | 0.66 | 0.57 |
| 6 | 1.5 | 1.2 | 1.0 | 0.85 |
| 8 | 2.0 | 1.6 | 1.3 | 1.14 |

## APPENDIX E: TRAINING RATES FOR INDIVIDUAL SUBJECTS

The training rates for each subject are presented in the table on the following page. The values for days and hours trained are cumulative and are presented only to the highest level of training achieved.

Bird 249 received 7 days (9 hours) of response conditioning in the helicopter without improvement; the bird was then deleted from advanced training (bird 251 was moved into advanced training). Birds 236 and 267 did not complete basic training because of their slow progress and difficulties in scheduling training time after advanced training began with group I. Bird 236 received 53 training days and 69 training hours. Bird 267 received 74 training days and 89 training hours.

Training Rates

| TASK | | GROUP I | | | | | | | | GROUP II | | | | | | | |
|---|---|---|---|---|---|---|---|---|---|---|---|---|---|---|---|---|---|
| | | 10 | | 249 | | 250 | | 251 | | 236 | | 239 | | 266 | | 267 | |
| | | Days | Hours | Days | Hrs | Days | Hrs | Days | Hrs | Days | Hrs | Days | Hrs | Days | Hrs | Days | Hrs |
| BASIC TRAINING | Response Conditioning | 4 | 2.0 | 5 | 2.0 | 8 | 4.4 | 6 | 3.0 | 7 | 3.0 | 9 | 4.0 | 12 | 6.0 | 16 | 9.0 |
| | Stimulus Control | 9 | 5.0 | 10 | 5.0 | 15 | 9.1 | 13 | 6.3 | 10 | 5.0 | 21 | 12 | 22 | 15 | 21 | 13 |
| | Basic Training Completed | 78 | 103 | 74 | 96 | 67 | 91 | 55 | 74 | - | - | 74 | 83 | 72 | 95 | - | - |
| ADVANCED TRAINING IN HELO | Response Conditioning | 80 | 106 | - | - | 72 | 97 | 60 | 79 | | | | | | | | |
| | Stimulus Control | 94 | 124 | - | - | 80 | 108 | 68 | 91 | | | | | | | | |
| | Search Status Achieved | 108 | 144 | - | - | 97 | 132 | 75 | 104 | | | | | | | | |