MAE Technical Report No. [illegible]

OFFICE OF NAVAL RESEARCH
CONTRACT N00014-78-C-0199

(6) LEVEL II

Final Report

AD A106[illegible]

Analysis of Bonded Joints in Composite Materials Structures Involving Hygrothermal Effects

Jack R. Vinson

H. Fletcher Brown Professor of Mechanical
and Aerospace Engineering
University of Delaware
Newark, Delaware 19711

April 1981

Distribution of this report is unlimited

SECURITY CLASSIFICATION OF THIS PAGE (When Data Entered)

REPORT DOCUMENTATION PAGE

READ INSTRUCTIONS BEFORE COMPLETING FORM

1. REPORT NUMBER

2. GOVT ACCESSION NO. AD-A100 720

3. RECIPIENT'S CATALOG NUMBER 14 MAE TR 237

4. TITLE (and Subtitle)
ANALYSIS OF BONDED JOINTS IN COMPOSITE MATERIALS STRUCTURES INVOLVING HYGROTHERMAL EFFECTS

5. TYPE OF REPORT & PERIOD COVERED
FINAL
1978 — 1979

6. PERFORMING ORG. REPORT NUMBER

7. AUTHOR(s)
JACK R. VINSON

8. CONTRACT OR GRANT NUMBER(s)
N00014-78-C-0199

9. PERFORMING ORGANIZATION NAME AND ADDRESS
UNIVERSITY OF DELAWARE
MECHANICAL & AEROSPACE ENGINEERING DEPT.
NEWARK, DELAWARE 19711

10. PROGRAM ELEMENT, PROJECT, TASK AREA & WORK UNIT NUMBERS

11. CONTROLLING OFFICE NAME AND ADDRESS
OFFICE OF NAVAL RESEARCH
495 SUMMER STREET
BOSTON, MASSACHUSETTS 02210

12. REPORT DATE
APRIL 1981

13. NUMBER OF PAGES
12

14. MONITORING AGENCY NAME & ADDRESS(if different from Controlling Office)

15. SECURITY CLASS. (of this report)
UNCLASSIFIED

15a. DECLASSIFICATION/DOWNGRADING SCHEDULE

16. DISTRIBUTION STATEMENT (of this Report)
~~Reproduction in whole or in part is p of the United States Government. Dist~~ is unlimited.

DISTRIBUTION STATEMENT A
Approved for public release;
Distribution Unlimited

17. DISTRIBUTION STATEMENT (of the abstract entered in Block 20, if different from Report)

18. SUPPLEMENTARY NOTES

19. KEY WORDS (Continue on reverse side if necessary and identify by block number)
Bonded Joints, Composite Materials Structures, Adhesive Properties, Hygrothermal Effects, Composite Material Panels.

20. ABSTRACT (Continue on reverse side if necessary and identify by block number)
Results of the analyses of stresses, strains and displacements in both the adhesive bond and the adherends of bonded composite material structures and bonded metallic structures are presented. Joint configurations include the single lap, the double lap, the single doubler, the double doubler, and the stepped lap joint. The methods will be useful in designing and analyzing such joints under static, dynamic and thermal loads, as well as accounting for stresses incurred during fabrication as well as hygrothermal

DD FORM 1 JAN 73 1473 EDITION OF 1 NOV 65 IS OBSOLETE
S/N 0102-014-6601

SECURITY CLASSIFICATION OF THIS PAGE (When Data Entered)

20.

histories. Also shown are the effects of important geometric and material parameters on the strain and displacement distributions.

FOREWARD

This final report is prepared for the Office of Naval Research, and completes Contract N00014-78-C-0199. The research was conducted under the technical monitorship of Dr. Nicholas Perrone.

The support of this research is gratefully acknowledged and appreciated.

ABSTRACT

Analytical methods of analysis for the determination of stresses, strains and displacements in both the adhesive bond and the adherends of bonded composite material structures and bonded metallic structures subjected to in-plane axial loads are presented. Joint configurations include the single lap (loaded with and without end tabs), the double lap, the single doubler and the double doubler. The methods will be useful in designing and analyzing such joints under static, dynamic and thermal loads, as well as accounting for stresses incurred during fabrication and hygrothermal histories. As a particular example, explicit solutions are shown for cases of identical isotropic adherends, and joints with axial loads and steady state moisture content and temperature distributions. This is done primarily for brevity; more generalized solutions will be presented in a subsequent unabridged report.[1*]

*Superscripted numbers refer to references at the end of report.

TABLE OF CONTENTS

		Page
Foreward		i
Abstract		ii
I.	Background	1
II.	General Analytical Approach	3
III.	Wetherhold - Vinson Analysis for an Adherend Element	4
IV.	Analysis of Polymer Adhesive	6
V.	Single Lap Joint Subjected to In-Plane Loads, Uniform Temperature and Moisture Content	8
VI.	Single Lap Joint with End Tabs Subjected to In-Plane Loads, Uniform Temperature and Moisture Content	26
VII.	Double Lap Joint Subjected to In-Plane Loads, Uniform Temperature and Moisture Content	30
VIII.	Double-Doubler Joint Subjected to In-Plane Loads, Uniform Temperature and Moisture Content	33
IX.	Single Doubler Joint Subjected to In-Plane Loads, Uniform Temperature and Moisture Content	36
X.	Conclusion	38
XI.	References	40
XII.	Publications	43
XIII.	Personnel	44

I. BACKGROUND

There are over 343 references dealing with adhesive bonded joints in various structures, the need still exists for better, more inclusive, easier-to-use solutions in order to design, analyze and optimize adhesively bonded composite material structures.

The single lap joint configuration has been studied more extensively than any other, and several analytical, numerical and finite-element based methods and routines are available. Early analyses, not addressing the composite material adherend, include those of Volkersen,[2] DeBruyne,[3] Goland and Reissner,[4] and Szepe[5]. These are discussed in detail by Kutscha and Hofer[6]. Among the newer and more comprehensive methods for analyzing single-lap joints are those by Lehman and Hawley,[7] Dickson, Hsu and McKinney,[8] Grimes et. al.,[9] Hart-Smith,[10,11] Renton and Vinson,[12,14] Srinivas,[15] Oplinger,[16] Liu,[17] Allman[18] and Humphreys and Herakovich[19]. Experimental verification of the accuracy of the Renton-Vinson analyses[12,14] has been made by Sharpe and Muha,[20] and computer codes for ease in computation are available. The modification of this approach to include hygrothermal (high temperature and high relative humidity) effects has been made by Wetherhold and Vinson[21].

The double lap joint has also been studied by several researchers. There is ambiguity in the definition of the double lap joint, the two configurations being what are herein referred to as the double lap joint and the double doubler joint. Methods presently available include those of Kutscha and Hofer,[6] Lehman, Hawley et al.,[7] Dickson et. al.,[8] Grimes et al.,[9] Hart-Smith,[22,23] Srinivas,[15] Keer and

Chantaramungkorn,[24] Oplinger,[16] Allman,[18] Sen,[25] and Humphreys and Herakovich[19]. Most of these do not contain thermal considerations, and none contain hygrothermal effects.

II. GENERAL ANALYTICAL APPROACH

Consider 2 or 3 flat panels joined together by an adhesive bonded joint, subjected to uniform in-plane mechanical loads in the x direction, and a continuous temperature distribution and a continuous moisture distribution varying in the x direction and in the thickness direction, z. If these panels are sufficiently wide in the y direction then the combined structure can be considered to be in a state of plane strain in the y direction.

For such cases many different joints may be analyzed by developing a general solution for the portion of the composite material adherend depicted by the Wetherhold-Vinson model of Figure 1. The laminated element shown is subjected to stress resultants N_1 and N_2, stress couples M_1 and M_2 and shear resultants Q_1 and Q_2. This adherend element is also subjected to a given distributed normal load on the upper and lower surfaces $p_L(x)$ and $p_2(x)$, distributed shear loads on the upper and lower surfaces $\tau_u(x)$ and $\tau_L(x)$, and a continuous temperature distribution $T_2(x,z)$ and a continuous moisture distribution, $M(x,z)$. While solutions to the Wetherhold-Vinson model are generals for most practical adherend stacking sequences, they are restricted to those of midplane (x-y plane) symmetry, which are in a state of plane strain in the y direction. Thus, this solution is an analytical finite element for the adherends in any of the joint configurations shown in Figures 2 through 6.

The adhesive in these configurations is also modelled using an elastic film approximation used previously by Renton and Vinson,[12,14] as well as several other researchers, and modified herein to include

hygrothermal effects. These effects are important to polymer matrices in composite adherends, they will also be important for the pure polymer adhesives.

By combining the analyses of the adherends and the adhesive the joint configurations of Figures 2-6 may be analyzed.

III. WETHERHOLD-VINSON ANALYSIS FOR AN ADHEREND ELEMENT

From Reference 21, the governing equations for a portion of an adherend subjected to all the loads dis ssed above are given below, wherein each symbol should be subscripted i, in order to use it subsequently as a building block in analyzing each of the various joint configurations.

$$\frac{dN_x}{d_x} + \tau_u - \tau_L = 0 \tag{1}$$

$$\frac{dQ_x}{d_x} + \sigma_u - \sigma_L = 0 \tag{2}$$

$$\frac{dM_x}{d_x} - Q_x + \frac{h}{2}(\tau_u + \tau_L) = 0 \tag{3}$$

$$M_x = - D_{11} \frac{d^2 w^o}{d_x^{\,2}} + F \frac{d^3\phi}{d_x^{\,3}} + G \frac{d\phi}{d_x} + H \frac{d^3\tau_L}{d_x^{\,3}}$$

$$+ I \frac{d\tau_L}{d_x} + \bar{H} \frac{d^3\tau_u}{d_x^{\,3}} + \bar{I} \frac{d\tau_u}{d_x} + \bar{h}(x) \quad \cdots\cdots$$

$$- M^T(x) - M_i^m(x) \tag{4}$$

$$N_x = A \frac{d^3\phi}{d_x^3} + B \frac{d\phi}{d_x} + C \frac{d^3\tau_L}{d_x^3} + D \frac{d\tau_L}{d_x} + \bar{C} \frac{d^3\tau_u}{d_x^3}$$

$$+ \bar{D} \frac{d\tau_u}{d_x} + E \frac{d^2\sigma_L}{d_x^2} + \bar{A} \frac{dU^o}{d_x} - N^T - N^m$$

$$+ \bar{E}\, \sigma_L + h^*(x) \tag{5}$$

$$Q_x = K_5\, \phi(x) \tag{6}$$

In the above the N, M, and Q quantities are the usual stress resultant, stress couple and shear resultant quantities as defined in numerous references such as Reference 26. Once they have been determined, a conventional laminate analysis may be used to determine the stresses in each ply. The quantities w^o and U^o are the midplane lateral displacement and in-plane displacement respectively, and ϕ is proportional to the rotation of the midplane. Thus, there are six equations and six unknown since for this problem which includes all of the loads shown in Figure 1 are prescribed. However, in what follows we will treat this problem as a building block, where the loads are, in general, unknowns which must be determined.

Also in the above the lettered constant coefficients in (4)-(6), which involve material properties and geometry, are defined in Reference 21, and are simply too lengthy to be included herein.

IV. ANALYSIS OF THE POLYMER ADHESIVE

Consider the adhesive layer in a single lap joint as shown in Figure 2. If we denote the displacements of the upper adherend and the lower adherend with subscripts 2 and 3 respectively, then the normal strains in the z direction and the shear strains in the x-z plane can be written as

$$\frac{w_2(x_2,-h_{2/2}) - w_3(x_3, h_{3/2})}{\eta} = \frac{\sigma_o(x)}{E_a} + \alpha_a \Delta T + \beta_a m \qquad (7)$$

$$\frac{U_2(x_2,-h_{2/2}) - U_3(x_3, h_{3/2}}{\eta} = \frac{\tau_o(x)}{G_a} \qquad (8)$$

where σ_o and τ_o are the unknowns, normal stress and shear stress in the adhesive respectively, E_a and G_u are the modulus of elasticity and the shear modulus of the adhesive in film forms as determined for example by Renton, Flaggs and Vinson,[27,28] η is the thickness of the adhesive in the z direction, α_a and β_a are respectively the coefficient of thermal expansion and hygroscopic expansion as discussed by Pipes, Chou and Vinson[29] for instance, ΔT is the change in temperature between the temperature of the material point considered and the "stress free" temperature, and m is the moisture content in weight percent existing in the adhesive.

If, in Figure 2 we label the adherend "above" and "below" the adhesive as elements 2 and 3, then (7) and (8) can be differentiated with respect to x and rewritten, in general utilizing (1) through (6)

as, where $x_2 = x_3 \equiv x$

$$0 = \frac{dw_2^{\,o}}{d_x} - \frac{dw_3^{\,o}}{d_x} + \gamma_1 \tau_o + \gamma_2 \frac{d^2\tau_o}{d_x^{\,2}} + \gamma_3 \phi_2 + \gamma_4 \phi_3 + \gamma_5 \frac{d^2\phi_2}{d_x^{\,2}}$$

$$+ \gamma_6 \frac{d^2\phi_3}{d_x^{\,2}} + \gamma_7 \frac{d\sigma_o}{d_x} + \gamma_8 \tau_{u_2} + \gamma_9 \frac{d^2\tau_{u2}}{d_x^{\,2}} + \gamma_{10} \tau_{L_3}$$

$$+ \gamma_{11} \frac{d^2 L_3}{d_x^{\,2}} + \gamma_{12}(x) - \eta\, \alpha_a \frac{d(\Delta T)}{d_x} - \eta\, \beta_a \frac{dm}{d_x} \qquad (9)$$

$$0 = U_2^{\,o} - U_3^{\,o} + \frac{h_2}{2} \frac{dw_2^{\,o}}{d_x} + \frac{h_3}{2} \frac{dw_3^{\,o}}{d_x} + \bar{\gamma}_1 \tau_o + \bar{\gamma}_2 \frac{d^2\tau_o}{d_x^{\,2}}$$

$$+ \bar{\gamma}_3 \phi_2 + \bar{\gamma}_4 \phi_3 + \bar{\gamma}_5 \frac{d^2\phi_2}{d_x^{\,2}} + \bar{\gamma}_6 \frac{d^2\phi_3}{d_x^{\,2}} + \bar{\gamma}_7 \frac{d\sigma_o}{d_x}$$

$$+ \bar{\gamma}_8 \tau_{u_2} + \bar{\gamma}_9 \frac{d^2\tau_{u_2}}{d_x^{\,2}} + \bar{\gamma}_{10} \tau_{L_3} + \bar{\gamma}_{11} \frac{d^2\tau_{L_3}}{d_x^{\,2}} + \bar{\gamma}_{12}(x) \qquad (10)$$

where the γ_i and $\bar{\gamma}_i$ are given in Reference 21, as well as the intermediate steps in the derivation. Thus, using equations (1) - (6), (9) and (10) we can easily analyze all the joints of Figures 2-6, for dissimilar or identical composite material adherends as well as for metallic adherends. Because of space limitations the solutions for the algebraically simpler, identical isotropic metallic adherends will be treated herein. More generalized solutions are treated in Reference 1.

V. SINGLE LAP JOINT SUBJECTED TO IN-PLANE LOADS, UNIFORM TEMPERATURE AND MOISTURE CONTENT

Consider the configuration shown in Figure 2. The adherends can be divided into components 1 through 4 employing (1) through (6) to describe each assuming that in components 1 and 4 there are no surface normal or shear loads, in component 2 no σ_u, and component 3 no σ_L. In element 2, σ_L and τ_L are σ_o and τ_o; and in element 3, σ_u and τ_u are σ_o and τ_o of the adhesive.

Hence for the four components, (1) through (6) are used four times with appropriate subscripts, and along with (9) and (10) are used to determine the adhesive stresses σ_o and τ_o. The result is a set of 26 equations, 26 unknowns and 26 boundary conditions.

The solutions for all quantities are found to be:

For component 1

$$N_{x_1} = P \cos\theta; \quad Q_{x_1} = -P \sin\theta \tag{12,13}$$

$$\phi_1 = \phi_4 = -\frac{P \sin\theta}{K_5} \tag{14}$$

$$M_{x_1} = -P x_1 \sin\theta \tag{15}$$

$$u_1^o = \left[\frac{P\cos\theta}{K} + \frac{N^T + N^m}{K}\right] x_1 + C_{22} \tag{16}$$

where $K = Eh/(1-\nu^2)$ for an isotropic adherend

and $N^T = \int_{-h/2}^{h/2} E\alpha\,\Delta T\,dz$, $N^m = \int_{-h/2}^{h/2} E\beta\, m\,dz$

$$w_1^0 = \left(\frac{P \sin\theta}{D}\right) \frac{x_1^3}{6} + C_{13} x_1 + C_{14} \tag{17}$$

For component 2

$$N_{x2} = \frac{C_{14} e^{\alpha x}}{(\alpha^2+\beta^2)} (\beta \sin\beta x + \alpha \cos\beta x) + \frac{C_{15} e^{\alpha x}}{(\alpha^2+\beta^2)} (\alpha \sin\beta x - \beta \cos\beta x)$$

$$+ \frac{C_{16} e^{-\alpha x}}{(\alpha^2+\beta^2)} (\beta \sin\beta x - \alpha \cos\beta x) - \frac{C_{17} e^{-\alpha x}}{(\alpha^2+\beta^2)} (\alpha \sin\beta x + \beta \cos\beta x) + C_{24} \tag{18}$$

$$Q_{x2} = \frac{C_{10} e^{\alpha x}}{(\alpha^2+\beta^2)} (\beta \sin\beta x + \alpha \cos\beta x) + \frac{C_{11} e^{\alpha x}}{(\alpha^2+\beta^2)} (\alpha \sin\beta x - \beta \cos\beta x)$$

$$+ \frac{C_{12} e^{-\alpha x}}{(\alpha^2+\beta^2)} (\beta \sin\beta x - \alpha \cos\beta x) - \frac{C_{13} e^{-\alpha x}}{(\alpha^2+\beta^2)} (\alpha \sin\beta x + \beta \cos\beta x) + C_{25} \tag{19}$$

$$\phi_2 = \frac{3}{4Gh} \left[\frac{C_{10} e^{\alpha x}}{(\alpha^2+\beta^2)} (\beta \sin\beta x + \alpha \cos\beta x) + \frac{C_{11} e^{\alpha x}}{(\alpha^2+\beta^2)} (\alpha \sin\beta x - \beta \cos\beta x) \right.$$

$$\left. + \frac{C_{12} e^{-\alpha x}}{(\alpha^2+\beta^2)} (\beta \sin\beta x - \alpha \cos\beta x) - \frac{C_{13} e^{-\alpha x}}{(\alpha^2+\beta^2)} (\alpha \sin\beta x + \beta \cos\beta x) + C_{25} \right] \tag{20}$$

$$M_{x2} = \frac{C_{10} e^{\alpha x}}{(\alpha^2+\beta^2)^2} \left[2\alpha\beta \sin\beta x + (\alpha^2-\beta^2) \cos\beta x \right]$$

$$+ \frac{C_{11} e^{\alpha x}}{(\alpha^2+\beta^2)^2} \left[(\alpha^2-\beta^2) \sin\beta x - 2\alpha\beta \cos\beta x \right]$$

$$- \frac{C_{12} e^{-\alpha x}}{(\alpha^2+\beta^2)^2} \left[2\alpha\beta \sin\beta x - (\alpha^2-\beta^2) \cos\beta x \right]$$

$$+ \frac{C_{13} e^{-\alpha x}}{(\alpha^2+\beta^2)^2} \left[(\alpha^2-\beta^2) \sin\beta x + 2\alpha\beta \cos\beta x \right] + C_{25} x \ldots\ldots$$

$$-\frac{h}{2}\frac{1}{(\alpha^2+\beta^2)}\Big[C_{14}e^{\alpha x}(\beta \sin\beta x+\alpha\cos\beta x)+C_{15}e^{\alpha x}(\alpha\sin\beta x-\beta\cos\beta x)$$

$$+C_{16}e^{-\alpha x}(\beta\sin\beta x-\alpha\cos\beta x)-C_{17}e^{-\alpha x}(\alpha\sin\beta x+\beta\cos\beta x)\Big]$$

$$+C_{26}$$

(21)

$$u_2^{\circ}=\frac{C_{14}e^{\alpha x}}{K(\alpha^2+\beta^2)^2}\Big[2\alpha\beta\sin\beta x+(\alpha^2-\beta^2)\cos\beta x\Big]$$

$$+\frac{C_{15}e^{\alpha x}}{K(\alpha^2+\beta^2)^2}\Big[(\alpha^2-\beta^2)\sin\beta x-2\alpha\beta\cos\beta x\Big]$$

$$+\frac{C_{16}e^{-\alpha x}}{K(\alpha^2+\beta^2)^2}\Big[-2\alpha\beta\sin\beta x+(\alpha^2-\beta^2)\cos\beta x\Big]$$

$$+\frac{C_{17}e^{-\alpha x}}{K(\alpha^2+\beta^2)^2}\Big[(\alpha^2-\beta^2)\sin\beta x+2\alpha\beta\cos\beta x\Big]+\frac{C_{24}x}{K}$$

$$-\frac{(1-\nu)h^2}{4G}\Big[C_{10}e^{\alpha x}(\alpha\cos\beta x-\beta\sin\beta x)+C_{11}e^{\alpha x}(\alpha\sin\beta x+\beta\cos\beta x)$$

$$+C_{12}e^{-\alpha x}(-\alpha\cos\beta x-\beta\sin\beta x)+C_{13}e^{-\alpha x}(-\alpha\sin\beta x+\beta\cos\beta x)\Big]$$

$$+\frac{\nu}{4G}\frac{1}{(\alpha^2+\beta^2)}\Big[C_{10}e^{\alpha x}(\beta\sin\beta x+\alpha\cos\beta x)+C_{11}e^{\alpha x}(\alpha\sin\beta x-\beta\cos\beta x)$$

$$+C_{12}e^{-\alpha x}(\beta\sin\beta x-\alpha\cos\beta x)-C_{13}e^{-\alpha x}(\alpha\sin\beta x+\beta\cos\beta x)+C_{25}\Big]$$

$$-\frac{3}{640}\frac{h^4}{K}\Big\{C_{14}e^{\alpha x}\Big[(\alpha^2-\beta^2)\cos\beta x-2\alpha\beta\sin\beta x\Big]$$

$$+C_{15}e^{\alpha x}\Big[(\alpha^2-\beta^2)\sin\beta x+2\alpha\beta\cos\beta x\Big]$$

$$+C_{16}e^{-\alpha x}\Big[(\alpha^2-\beta^2)\cos\beta x+2\alpha\beta\sin\beta x\Big]$$

$$+C_{17}e^{-\alpha x}\Big[(\alpha^2-\beta^2)\sin\beta x-2\alpha\beta\cos\beta x\Big]\Big\}\ \ldots\ldots$$

$$+ \frac{h^2}{24K} \frac{(2+\nu)}{(1-\nu)} \left(C_{14} e^{\alpha x} \cos \beta x + C_{15} e^{\alpha x} \sin \beta x \right.$$

$$\left. + C_{16} e^{-\alpha x} \cos \beta x + C_{17} e^{-\alpha x} \sin \beta x \right)$$

$$- \frac{h^3}{24K} \Big[C_{10} e^{\alpha x} (\alpha \cos \beta x - \beta \sin \beta x)$$

$$+ C_{11} e^{\alpha x} (\alpha \sin \beta x + \beta \cos \beta x)$$

$$- C_{12} e^{-\alpha x} (\alpha \cos \beta x + \beta \sin \beta x)$$

$$+ C_{13} e^{-\alpha x} (- \alpha \sin \beta x + \beta \cos \beta x) \Big]$$

$$+ C_{34} + N_2^T + N_2^m \tag{22}$$

$$w_2^c = \frac{1}{D(\alpha^2+\beta^2)^4}\Big\{ -C_{10}e^{\alpha x}\Big[4\alpha\beta(\alpha^2-\beta^2)\sin\beta x + (\alpha^4-6\alpha^2\beta^2+\beta^4)\cos\beta x\Big]$$

$$-C_{11}e^{\alpha x}\Big[(\alpha^4-6\alpha^2\beta^2+\beta^4)\sin\beta x - 4\alpha\beta(\alpha^2-\beta^2)\cos\beta x\Big]$$

$$-C_{12}e^{-\alpha x}\Big[-4\alpha\beta(\alpha^2-\beta^2)\sin\beta x + (\alpha^4-6\alpha^2\beta^2+\beta^4)\cos\beta x\Big]$$

$$-C_{13}e^{-\alpha x}\Big[(\alpha^4-6\alpha^2\beta^2+\beta^4)\sin\beta x + 4\alpha\beta(\alpha^2-\beta^2)\cos\beta x\Big]\Big\}$$

$$+\frac{C_{25}x^3}{6}$$

$$+\frac{h}{2D}\frac{1}{(\alpha^2+\beta^2)^3}\Big\{C_{14}e^{\alpha x}\Big[\beta(3\alpha^2-\beta^2)\sin\beta x + \alpha(\alpha^2-3\beta^2)\cos\beta x\Big]$$

$$+C_{15}e^{\alpha x}\Big[\alpha(\alpha^2-3\beta^2)\sin\beta x + \beta(\beta^2-3\alpha^2)\cos\beta x\Big]$$

$$+C_{16}e^{-\alpha x}\Big[\beta(3\alpha^2-\beta^2)\sin\beta x + \alpha(3\beta^2-\alpha^2)\cos\beta x\Big]$$

$$+C_{17}e^{-\alpha x}\Big[\alpha(\alpha^2-3\beta^2)\sin\beta x - \beta(\beta^2-3\alpha^2)\cos\beta x\Big]\Big\}$$

$$-\frac{C_{28}x^2}{2D}$$

$$+\frac{34}{2440}\frac{(1-\nu)h}{G}\Big(C_{10}e^{\alpha x}\cos\beta x + C_{11}e^{\alpha x}\sin\beta x$$

$$+C_{12}e^{-\alpha x}\cos\beta x + C_{13}e^{-\alpha x}\sin\beta x\Big)\ \ldots$$

$$+ \frac{3}{20} \frac{(8+5\nu)}{(\alpha^2+\beta^2)^2 Gh} \Big\{ C_{10} e^{\alpha x} \left[2\alpha\beta \sin\beta x + (\alpha^2-\beta^2) \cos\beta x \right]$$

$$+ C_{11} e^{\alpha x} \left[(\alpha^2-\beta^2) \sin\beta x - 2\alpha\beta \cos\beta x \right]$$

$$+ C_{12} e^{-\alpha x} \left[-2\alpha\beta \sin\beta x + (\alpha^2-\beta^2) \cos\beta x \right]$$

$$+ C_{13} e^{-\alpha x} \left[(\alpha^2-\beta^2) \sin\beta x - 2\alpha\beta \cos\beta x \right] \Big\}$$

$$+ \frac{3}{20} \frac{(8+5\nu)}{Gh} C_{25} x$$

$$+ \frac{17 h^5}{26880 D} \Big[C_{14} e^{\alpha x} (\alpha \cos\beta x - \beta \sin\beta x)$$

$$+ C_{15} e^{\alpha x} (\alpha \sin\beta x + \beta \cos\beta x)$$

$$- C_{16} e^{-\alpha x} (\alpha \cos\beta x + \beta \sin\beta x)$$

$$+ C_{17} e^{-\alpha x} (-\alpha \sin\beta x + \beta \cos\beta x) \Big]$$

$$- \frac{(4+\nu)\, h^3}{(1-\nu)\, 240 D (\alpha^2+\beta^2)} \Big[C_{14} e^{\alpha x} (\beta \sin\beta x + \alpha \cos\beta x)$$

$$+ C_{15} e^{\alpha x} (\alpha \sin\beta x - \beta \cos\beta x)$$

$$+ C_{16} e^{-\alpha x} (\beta \sin\beta x - \alpha \cos\beta x)$$

$$- C_{17} e^{-\alpha x} (\alpha \sin\beta x + \beta \cos\beta x) \Big]$$

$$+ C_{30} x + C_{31} \tag{23}$$

For component 3,

$$N_{x3} = -\frac{C_{14} e^{\alpha x}}{(\alpha^2+\beta^2)} (\beta \sin\beta x + \alpha \cos\beta x) - \frac{C_{15} e^{\alpha x}}{(\alpha^2+\beta^2)} (\alpha \sin\beta x - \beta \cos\beta x) \cdots$$

$$- \frac{C_{16}\, e^{-\alpha x}}{(\alpha^2+\beta^2)} (\beta \sin\beta x - \alpha \cos\beta x)$$

$$+ \frac{C_{17}\, e^{-\alpha x}}{(\alpha^2+\beta^2)} (\alpha \sin\beta x + \beta \cos\beta x) + C_{24} \tag{24}$$

$$Q_{x3} = - \frac{C_{10}\, e^{\alpha x}}{(\alpha^2+\beta^2)} (\beta \sin\beta x + \alpha \cos\beta x) - \frac{C_{11}\, e^{\alpha x}}{(\alpha^2+\beta^2)} (\alpha \sin\beta x - \beta \cos\beta x)$$

$$- \frac{C_{12}\, e^{-\alpha x}}{(\alpha^2+\beta^2)} (\beta \sin\beta x - \alpha \cos\beta x) + \frac{C_{13}\, e^{-\alpha x}}{(\alpha^2+\beta^2)} (\alpha \sin\beta x + \beta \cos\beta x) + C_{27} \tag{25}$$

$$\phi_3 = \frac{3}{4Gh} \frac{1}{(\alpha^2+\beta^2)} \Big[-C_{10}\, e^{\alpha x} (\beta \sin\beta x + \alpha \cos\beta x) - C_{11}\, e^{\alpha x} (\alpha \sin\beta x - \beta \cos\beta x)$$
$$- C_{12}\, e^{-\alpha x} (\beta \sin\beta x - \alpha \cos\beta x) + C_{13}\, e^{-\alpha x} (\alpha \sin\beta x + \beta \cos\beta x) + C_{27} \Big] \tag{26}$$

$$M_{x3} = \frac{1}{(\alpha^2+\beta^2)^2} \Big\{ - C_{10}\, e^{\alpha x} \big[2\alpha\beta \sin\beta x + (\alpha^2-\beta^2) \cos\beta x \big]$$
$$- C_{11}\, e^{\alpha x} \big[(\alpha^2-\beta^2) \sin\beta x - 2\alpha\beta \cos\beta x \big]$$
$$+ C_{12}\, e^{-\alpha x} \big[2\alpha\beta \sin\beta x - (\alpha^2-\beta^2) \cos\beta x \big]$$
$$- C_{13}\, e^{-\alpha x} \big[(\alpha^2-\beta^2) \sin\beta x + 2\alpha\beta \cos\beta x \big] \Big\} + C_{27} x$$

$$- \frac{h}{2(\alpha^2+\beta^2)} \Big[C_{14}\, e^{\alpha x} (\beta \sin\beta x + \alpha \cos\beta x) + C_{15}\, e^{\alpha x} (\alpha \sin\beta x - \beta \cos\beta x)$$
$$+ C_{16}\, e^{-\alpha x} (\beta \sin\beta x - \alpha \cos\beta x) - C_{17}\, e^{-\alpha x} (\alpha \sin\beta x + \beta \cos\beta x) \Big]$$

$$+ C_{24}$$

$$u_3^{\circ} = - \frac{1}{K(\alpha^2+\beta^2)^2} \Big[C_{14}\, e^{\alpha x} \big[2\alpha\beta \sin\beta x + (\alpha^2-\beta^2) \cos\beta x \big] \tag{27}$$
$$+ C_{15}\, e^{\alpha x} \big[(\alpha^2-\beta^2) \sin\beta x - 2\alpha\beta \cos\beta x \big] \cdots\cdots$$

$$+ C_{16} e^{-\alpha x} \left[-2\alpha\beta \sin\beta x + (\alpha^2-\beta^2)\cos\beta x \right]$$

$$+ C_{17} e^{-\alpha x} \left[(\alpha^2-\beta^2)\sin\beta x + 2\alpha\beta\cos\beta x \right] \Big\} + \frac{C_{26}\, x}{K}$$

$$+ \frac{(1-\nu)h^2}{96G} \Big[C_{10} e^{\alpha x}(\alpha\cos\beta x - \beta\sin\beta x) + C_{11} e^{\alpha x}(\alpha\sin\beta x + \beta\cos\beta x)$$

$$- C_{12} e^{-\alpha x}(\alpha\cos\beta x + \beta\sin\beta x) + C_{13} e^{-\alpha x}(-\alpha\sin\beta x + \beta\cos\beta x) \Big]$$

$$- \frac{\nu}{4G(\alpha^2+\beta^2)} \Big[C_{10} e^{\alpha x}(\beta\sin\beta x + \alpha\cos\beta x) + C_{11} e^{\alpha x}(\alpha\sin\beta x - \beta\cos\beta x)$$

$$+ C_{12} e^{-\alpha x}(\beta\sin\beta x - \alpha\cos\beta x) - C_{13} e^{-\alpha x}(\alpha\sin\beta x + \beta\cos\beta x) - C_{27} \Big]$$

$$+ \frac{3h^4}{640K} \Big\{ C_{14} e^{\alpha x}\left[(\alpha^2-\beta^2)\cos\beta x - 2\alpha\beta\sin\beta x\right]$$

$$+ C_{15} e^{\alpha x}\left[(\alpha^2-\beta^2)\sin\beta x + 2\alpha\beta\cos\beta x\right]$$

$$+ C_{16} e^{-\alpha x}\left[(\alpha^2-\beta^2)\cos\beta x + 2\alpha\beta\sin\beta x\right]$$

$$+ C_{17} e^{-\alpha x}\left[(\alpha^2-\beta^2)\sin\beta x - 2\alpha\beta\cos\beta x\right]$$

$$- \frac{h^2(2+\nu)}{24(1-\nu)} \left(C_{14} e^{\alpha x}\cos\beta x + C_{15} e^{\alpha x}\sin\beta x + C_{16} e^{-\alpha x}\cos\beta x + C_{17} e^{-\alpha x}\sin\beta x \right)$$

$$+ N_3^T + N_3^m + C_{35} \tag{28}$$

In (28), the thermal resultant and hygroscopic resultant are both included for completeness, because in a "quasi-isotropic" polymer matrix adherend, both terms are important.

$$w_3^0 = \frac{1}{D(\alpha^2+\beta^2)^4}\Big\{C_{10}e^{\alpha x}\left[4\alpha\beta(\alpha^2-\beta^2)\sin\beta x + (\alpha^4-6\alpha^2\beta^2+\beta^4)\cos\beta x\right]$$

$$+ C_{11}e^{\alpha x}\left[(\alpha^4-6\alpha^2\beta^2+\beta^4)\sin\beta x - 4\alpha\beta(\alpha^2-\beta^2)\cos\beta x\right]$$

$$+ C_{12}e^{-\alpha x}\left[-4\alpha\beta(\alpha^2-\beta^2)\sin\beta x + (\alpha^4-6\alpha^2\beta^2+\beta^4)\cos\beta x\right]$$

$$+ C_{13}e^{-\alpha x}\left[(\alpha^4-6\alpha^2\beta^2+\beta^4)\sin\beta x + 4\alpha\beta(\alpha^2-\beta^2)\cos\beta x\right]\Big\}$$

$$+ \frac{C_{27}x^3}{6}$$

$$+ \frac{h}{2D(\alpha^2+\beta^2)^3}\Big\{C_{14}e^{\alpha x}\left[\beta(3\alpha^2-\beta^2)\sin\beta x + \alpha(\alpha^2-3\beta^2)\cos\beta x\right]$$

$$+ C_{15}e^{\alpha x}\left[\alpha(\alpha^2-3\beta^2)\sin\beta x + \beta(\beta^2-3\alpha^2)\cos\beta x\right]$$

$$+ C_{16}e^{-\alpha x}\left[\beta(3\alpha^2-\beta^2)\sin\beta x + \alpha(3\beta^2-\alpha^2)\cos\beta x\right]$$

$$+ C_{17}e^{-\alpha x}\left[\alpha(\alpha^2-\beta^2 3)\sin\beta x - \beta(\beta^2-3\alpha^2)\cos\beta x\right]\Big\}$$

$$- \frac{C_{24}x^2}{2D} - \frac{34(1-\nu)h}{2240\,G}\Big[C_{10}e^{\alpha x}\cos\beta x + C_{11}e^{\alpha x}\sin\beta x$$

$$+ C_{12}e^{-\alpha x}\cos\beta x + C_{13}e^{-\alpha x}\sin\beta x\Big]$$

$$- \frac{3(8+5\nu)}{20Gh(\alpha^2+\beta^2)^3}\Big\{C_{10}e^{\alpha x}\left[2\alpha\beta\sin\beta x + (\alpha^2-\beta^2)\cos\beta x\right]$$

$$+ C_{11}e^{\alpha x}\left[(\alpha^2-\beta^2)\sin\beta x - 2\alpha\beta\cos\beta x\right]$$

$$+ C_{12}e^{-\alpha x}\left[-2\alpha\beta\sin\beta x + (\alpha^2-\beta^2)\cos\beta x\right]$$

$$+ C_{13}e^{-\alpha x}\left[(\alpha^2-\beta^2)\sin\beta x - 2\alpha\beta\cos\beta x\right]\Big\} - \frac{3(8+5\nu)}{20Gh}C_{27}x$$

$$+ \frac{17h^5}{26{,}880D}\Big[C_{14}e^{\alpha x}(\alpha\cos\beta x - \beta\sin\beta x) + C_{15}e^{\alpha x}(\alpha\sin\beta x + \beta\cos\beta x)$$

$$- C_{16}e^{-\alpha x}(\alpha\cos\beta x + \beta\sin\beta x) + C_{17}e^{-\alpha x}(-\alpha\sin\beta x + \beta\cos\beta x)\Big]$$

. . . .

$$-\frac{(4+\nu)\,h^3}{(1-\nu)\,240D\,(\alpha^2+\beta^2)}\Big[C_{14}e^{\alpha x}(\beta\sin\beta x+\alpha\cos\beta x)$$
$$+C_{15}e^{\alpha x}(\alpha\sin\beta x-\beta\cos\beta x)$$
$$+C_{16}e^{-\alpha x}(\beta\sin\beta x-\alpha\cos\beta x)$$
$$+C_{17}e^{-\alpha x}(\alpha\sin\beta x+\beta\cos\beta x)\Big]+C_{32}x+C_{33} \qquad (29)$$

For component 4:

$$N_{xy}=P\cos\theta\,;\quad Q_{xy}=-P\sin\theta \qquad (30,31)$$

$$\phi_y=-\frac{P\sin\theta}{K_s} \qquad (32)$$

$$M_{xy}=P(L_y-x_y)\sin\theta \qquad (33)$$

$$u_y^{\,o}=\left[\frac{P\cos\theta}{K}+\frac{N^T+N^m}{K}\right]x_y+C_{23} \qquad (34)$$

$$w_y^{\,o}=\left[\frac{P\sin\theta}{D}\right]\left[\frac{x_y^3}{6}-\frac{L_y x_y^2}{2}\right]+C_{20}x_y+C_{21} \qquad (35)$$

For the adhesive:

$$\sigma_o=C_{10}e^{\alpha x}\cos\beta x+C_{11}e^{\alpha x}\sin\beta x+C_{12}e^{-\alpha x}\cos\beta x+C_{13}e^{-\alpha x}\sin\beta x \qquad (36)$$

$$\tau_o=C_{14}e^{\alpha x}\cos\beta x+C_{15}e^{\alpha x}\sin\beta x+C_{16}e^{-\alpha x}\cos\beta x+C_{17}e^{-\alpha x}\sin\beta x \qquad (37)$$

In the above, the values of α and β are determined from the roots of the following equation

$$\left\{ \frac{3\eta(1-\nu^2)}{2rc} - \frac{E}{E_a}\left[(1-\nu) + \frac{\eta}{h}\right]\right\} \frac{d^4\sigma_o}{dx^4} + \frac{24(1+\nu)}{5h^2}\frac{d^2\sigma_o}{dx^2} + \frac{24(1-\nu^2)}{h^4}\sigma_o \tag{38}$$

wherein $\sigma_o = e^{(\alpha+i\beta)x}$

Also in the above equation all C_{ij} are determined by the boundary conditions for this problem. For ease of comparison, the numbered subscripts shown correspond to those used in Reference 1. The boundary condition for this problem are:

$$a: X_1 = 0; \quad U_1^o(0) = 0; \quad w_1^o(0) = 0; \quad M_{x1}(0) = 0 \tag{39}$$

at $X_1 = L_1$ and $X_2 = 0$;

$$\begin{aligned} w_1^o(L_1) &= w_2^o(0) & Q_1(L_1) &= Q_2(0) \\ \phi_1(L_1) &= \phi_2(0) & U_1^o(L_1) &= U_2^o(0) \\ M_1(L_1) &= M_2(0) & N_{x1}(L_1) &= N_{x2}(0) \end{aligned} \tag{40}$$

at $X_2 = L_2$

$$N_{x2}(L_2) = 0; \quad M_{x2}(L_2) = 0; \quad Q_{x2}(L_2) = 0 \tag{41}$$

at $X_3 = 0$

$$N_{x3}(0) = 0; \quad M_{x3}(0) = 0; \quad Q_{x3}(0) = 0 \tag{42}$$

at $X_3 = L_3$ and $X_4 = 0$

$$w_3^o(L_3) = w_4^o(0) \qquad Q_3(L_3) = Q_4(0)$$

$$\phi_3(L_3) = \phi_4(0) \qquad U_3^o(L_3) = U_4^o(0)$$

$$M_3(L_3) = M_4(0) \qquad N_{x3}(L_3) = N_{x4}(0) \tag{44}$$

When (39) and (44) are used in (16) and (17), it is found that

$$C_{22} = C_{19} = 0 \tag{45}$$

The remaining boundary conditions that are used result in an 18 x 18 set of equations as given below which are easily solved by machine computation for a given geometry and set of material properties. The boundary conditions listed in (40) through (43) are in order:

$$\frac{P\sin\theta L_1^3}{6D} + C_{18}L_1 = \frac{1}{D(\alpha^2+\beta^2)^4}\Big[-C_{10}(\alpha^4-6\alpha^2\beta^2+\beta^4)$$

$$+4C_{11}\alpha\beta(\alpha^2-\beta^2) - C_{12}(\alpha^4-6\alpha^2\beta^2+\beta^4) - 4C_{13}\alpha\beta(\alpha^2-\beta^2)\Big]$$

$$+\frac{h}{2D(\alpha^2+\beta^2)^3}\Big[C_{14}\alpha(\alpha^2-3\beta^2) + C_{15}\beta(\beta^2-3\alpha^2)$$

$$+C_{16}\alpha(3\beta^2-\alpha^2) - C_{17}\beta(\beta^2-3\alpha^2)\Big]$$

$$+\frac{39(1-\nu)h}{2240G}\left[C_{10}+C_{12}\right]$$

$$+\frac{3(8+5\nu)}{206h(\alpha^2+\beta^2)^2}\Big[C_{10}(\alpha^2-\beta^2) - 2C_{11}\alpha\beta + C_{12}(\alpha^2-\beta^2) - 2C_{13}\alpha\beta\Big] \quad \cdots$$

$$+\frac{17\,h^5\beta}{26{,}880\,D}\left[-C_{14}+C_{15}-C_{16}+C_{17}\right]$$

$$+\frac{(4+\nu)\,h^3}{(1-\nu)240\,D\,(\alpha^2+\beta^2)}\left[-C_{14}\alpha+C_{15}\beta+C_{16}\alpha+C_{17}\beta\right]$$

(46)

$$-\frac{P\sin\theta}{K_s}=\frac{3}{4Gh(\alpha^2+\beta^2)}\left[C_{10}\alpha-C_{11}\beta-C_{12}\alpha-C_{13}\beta+C_{25}(\alpha^2+\beta^2)\right]$$

$$-PL_1\sin\theta=\frac{1}{(\alpha^2+\beta^2)^2}\left[C_{10}(\alpha^2-\beta^2)-2C_{11}\alpha\beta+C_{12}(\alpha^2-\beta^2)+2C_{13}\alpha\beta\right] \quad (47)$$

$$-\frac{h}{2(\alpha^2+\beta^2)}\left(C_{14}\alpha-C_{15}\beta-C_{16}\alpha-C_{17}\beta\right)+C_{28} \quad (47a)$$

$$-P\sin\theta=\frac{1}{(\alpha^2+\beta^2)}\left(C_{10}\alpha-C_{11}\beta-C_{12}\alpha-C_{13}\beta\right)+C_{25} \quad (48)$$

$$\frac{(P\cos\theta+N^T+N^m)}{K}L_1=\frac{1}{K(\alpha^2+\beta^2)^2}\left[C_{14}(\alpha^2-\beta^2)-2C_{15}\alpha\beta+C_{16}(\alpha^2-\beta^2)+2C_{17}\alpha\beta\right]$$

$$-\frac{(1+\nu)\,h^2}{384\,G}\left(C_{10}\alpha+C_{11}\beta-C_{12}\alpha+C_{13}\beta\right)$$

$$+\frac{\nu}{4G(\alpha^2+\beta^2)}\left[C_{10}\alpha-C_{11}\beta-C_{12}\alpha-C_{13}\beta+(\alpha^2+\beta^2)\,C_{25}\right]$$

$$-\frac{qh^4}{1920K}\left[C_{14}(\alpha^2-\beta^2)+2\alpha\beta\,C_{15}+(\alpha^2-\beta^2)C_{16}-2\alpha\beta\,C_{17}\right]$$

$$-\frac{h^2}{12K}\left[3-\frac{(1+\nu)}{(1-\nu)}\right](C_{14}+C_{16}) \quad \cdots$$

$$-\frac{h^3}{24K}\left(C_{10}\alpha + C_{11}\beta - C_{12}\alpha + C_{13}\beta \right) \tag{49}$$

$$P\cos\theta = \frac{1}{(\alpha^2+\beta^2)}\left(C_{14}\alpha - C_{15}\beta - C_{16}\alpha - C_{17}\beta \right) + C_{24} \tag{50}$$

$$\begin{aligned} 0 = \frac{1}{(\alpha^2+\beta^2)}\Big[& C_{14}e^{\alpha L_2}(\beta \sin\beta L_2 + \alpha\cos\beta L_2) \\ & + C_{15}e^{\alpha L_2}(\alpha\sin\beta L_2) - \beta\cos\beta L_2) \\ & + C_{16}e^{-\alpha L_2}(\beta\sin\beta L_2 - \alpha\cos\beta L_2) \\ & - C_{17}e^{-\alpha L_2}(\alpha\sin\beta L_2 + \beta\cos\beta L_2) + C_{24} \end{aligned}$$

$$\begin{aligned} 0 = \frac{1}{(\alpha^2+\beta^2)^2}\Big\{ & C_{10}e^{\alpha L_2}\left[2\alpha\beta\sin\beta L_2 + (\alpha^2-\beta^2)\cos\beta L_2\right] \\ & + C_{11}e^{\alpha L_2}\left[(\alpha^2-\beta^2)\sin\beta L_2 - 2\alpha\beta\cos\beta L_2\right] \\ & - C_{12}e^{-\alpha L_2}\left[2\alpha\beta\sin\beta L_2 - (\alpha^2-\beta^2)\cos\beta L_2\right] \\ & + C_{13}e^{-\alpha L_2}\left[(\alpha^2-\beta^2)\sin\beta L_2 + 2\alpha\beta\cos\beta L_2\right]\Big\} + C_{25}L_2 \end{aligned} \tag{51}$$

$$\begin{aligned} -\frac{h}{2(\alpha^2+\beta^2)}\Big[& C_{14}e^{\alpha L_2}(\beta\sin\beta L_2 + \alpha\cos\beta L_2) \\ & + C_{15}e^{\alpha L_2}(\alpha\sin\beta L_2 - \beta\cos\beta L_2) \\ & + C_{16}e^{-\alpha L_2}(\beta\sin\beta L_2 - \alpha\cos\beta L_2) \\ & - C_{17}e^{-\alpha L_2}(\alpha\sin\beta L_2 + \beta\cos\beta L_2) + C_{28} \end{aligned}$$

(52)

$$0 = C_{10} e^{\alpha L_2}(\beta \sin \beta L_2 + \alpha \cos \beta L_2) + C_{11} e^{\alpha L_2}(\alpha \sin \beta L_2 - \beta \cos \beta L_2)$$

$$+ C_{12} e^{-\alpha L_2}(\beta \sin \beta L_2 - \alpha \cos \beta L_2) - C_{13} e^{-\alpha L_2}(\alpha \sin \beta L_2 + \beta \cos \beta L_2)$$

$$+ C_{25}(\alpha^2 + \beta^2) = 0 \tag{53}$$

$$0 = -C_{14}\alpha + C_{15}\beta + C_{16}\alpha + C_{17}\alpha + C_{26}(\alpha^2 + \beta^2) \tag{54}$$

$$0 = \frac{1}{(\alpha^2+\beta^2)^2}\left[C_{10}(\beta^2-\alpha^2) + 2C_{11}\alpha\beta + C_{12}(\beta^2-\alpha^2) - 2C_{13}\alpha\beta\right]$$

$$- \frac{h}{2(\alpha^2+\beta^2)}(C_{14}\alpha - C_{15}\beta - C_{16}\alpha - C_{17}\beta) + C_{29} \tag{55}$$

$$0 = -C_{10}\alpha + C_{11}\beta + C_{12}\alpha + C_{13}\beta + C_{27}(\alpha^2 + \beta^2) \tag{56}$$

$$\frac{1}{D(\alpha^2+\beta^2)^4}\Big\{C_{10} e^{\alpha L_3}\left[4\alpha\beta(\alpha^2-\beta^2)\sin\beta L_3 + (\alpha^4-6\alpha^2\beta^2+\beta^4)\cos\beta L_3\right]$$

$$+ C_{11} e^{\alpha L_3}\left[(\alpha^4-6\alpha^2\beta^2+\beta^4)\sin\beta L_3 - 4\alpha\beta(\alpha^2-\beta^2)\cos\beta L_3\right]$$

$$+ C_{12} e^{-\alpha L_3}\left[-4\alpha\beta(\alpha^2-\beta^2)\sin\beta L_3 + (\alpha^4-6\alpha^2\beta^2+\beta^4)\cos\beta L_3\right]$$

$$+ C_{13} e^{-\alpha L_3}\left[(\alpha^4-6\alpha^2\beta^2+\beta^4)\sin\beta L_3 + 4\alpha\beta(\alpha^2-\beta^2)\cos\beta L_3\right] + \frac{C_{27} L_3^3}{6}$$

$$+ \frac{h}{2D(\alpha^2+\beta^2)^3}\Big\{C_{14} e^{\alpha L_3}\left[\beta(3\alpha^2-\beta^2)\sin\beta L_3 + \alpha(\alpha^2-3\beta^2)\cos\beta L_3\right]$$

$$+ C_{15} e^{\alpha L_3}\left[\alpha(\alpha^2-3\beta^2)\sin\beta L_3 + \beta(\beta^2-3\alpha^2)\cos\beta L_3\right]$$

$$+ C_{16} e^{-\alpha L_3}\left[\beta(3\alpha^2-\beta^2)\sin\beta L_3 + \alpha(3\beta^2-\alpha^2)\cos\beta L_3\right]$$

$$+ C_{17} e^{-\alpha L_3}\left[\alpha(\alpha^2-3\beta^2)\sin\beta L_3 - \beta(\beta^2-3\alpha^2)\cos\beta L_3\right]\Big\} \quad \text{.....}$$

$$- \frac{C_{24} L_3^2}{2D} - \frac{34(1-\nu)}{2240} \frac{h}{G} \left[C_{10} e^{\alpha L_3} \cos\beta L_3 - C_{11} e^{\alpha L} \sin\beta L_3 + C_{12} e^{-\alpha L_3} \cos\beta L_3 + C_{13} e^{-\alpha L_3} \sin\beta L_3 \right]$$

$$- \frac{3(8+5\nu)}{20Gh(\alpha^2+\beta^2)^2} \Big\{ C_{10} e^{\alpha L_3} \left[2\alpha\beta \sin\beta L_3 + (\alpha^2-\beta^2) \cos\beta L_3 \right]$$

$$+ C_{11} e^{\alpha L_3} \left[(\alpha^2-\beta^2) \sin\beta L_3 - 2\alpha\beta \cos\beta L_3 \right]$$

$$+ C_{12} e^{-\alpha L_3} \left[-2\alpha\beta \sin\beta L_3 + (\alpha^2-\beta^2) \cos\beta L_3 \right]$$

$$+ C_{13} e^{-\alpha L_3} \left[(\alpha^2-\beta^2) \sin\beta L_3 - 2\alpha\beta \cos\beta L_3 \right] \Big\}$$

$$- \frac{3(8+5\nu)}{20Gh} C_{27} L_3$$

$$+ \frac{17h^5}{26{,}880\, D} \Big[C_{14} e^{\alpha L_3} (\alpha \cos\beta L_3 - \beta \sin\beta L_3)$$

$$+ C_{15} e^{\alpha L_3} (\alpha \sin\beta L_3 + \beta \cos\beta L_3)$$

$$- C_{16} e^{-\alpha L_3} (\alpha \cos\beta L_3 + \beta \sin\beta L_3)$$

$$+ C_{17} e^{-\alpha L_3} (-\alpha \sin\beta L_3 + \beta \cos\beta L_3) \Big]$$

$$+ \frac{(4+\nu) h^3}{(1-\nu)\, 240 D (\alpha^2+\beta^2)} \Big[-C_{14} e^{\alpha L_3} (\beta \sin\beta L_3 + \alpha \cos\beta L_3)$$

$$- C_{15} e^{\alpha L_3} (\alpha \sin\beta L_3 + \beta \cos\beta L_3)$$

$$- C_{16} e^{-\alpha L_3} (\beta \sin\beta L_3 - \alpha \cos\beta L_3)$$

$$+ C_{17} e^{-\alpha L_3} (\alpha \sin\beta L_3 + \beta \cos\beta L_3) \Big]$$

$$+ C_{32} L_3 = 0 \qquad (57)$$

$$\frac{3}{4Gh(\alpha^2+\beta^2)}\Big[-C_{10}e^{\alpha L_3}(\beta \sin\beta L_3+\alpha\cos\beta L_3)+C_{11}e^{\alpha L_3}(\alpha\sin\beta L_3-\beta\cos\beta L_3)$$
$$-C_{12}e^{-\alpha L_3}(\beta\sin\beta L_3-\alpha\cos\beta L_3)+C_{13}e^{-\alpha L_3}(\alpha\sin\beta L_3+\beta\cos\beta L_3)$$
$$+C_{27}\Big]=-\frac{P\sin\theta}{K_5} \tag{58}$$

$$\frac{1}{(\alpha^2+\beta^2)^2}\Big\{-C_{10}e^{\alpha L_3}\left[2\alpha\beta\sin\beta L_3+(\alpha^2-\beta^2)\cos\beta L_3\right]$$
$$-C_{11}e^{\alpha L_3}\left[(\alpha^2-\beta^2)\sin\beta L_3-2\alpha\beta\cos\beta L_3\right]$$
$$+C_{12}e^{-\alpha L_3}\left[2\alpha\beta\sin\beta L_3-(\alpha^2-\beta^2)\cos\beta L_3\right]$$
$$-C_{13}e^{-\alpha L_3}\left[(\alpha^2-\beta^2)\sin\beta L_3+2\alpha\beta\cos\beta L_3\right]+C_{25}L_3$$
$$-\frac{h}{2}\frac{1}{(\alpha^2+\beta^2)}\Big[C_{14}e^{\alpha L_3}(\beta\sin\beta L_3+\alpha\cos\beta L_3)$$
$$+C_{15}e^{\alpha L_3}(\alpha\sin\beta L_3-\beta\cos\beta L_3)$$
$$+C_{16}e^{-\alpha L_3}(\beta\sin\beta L_3-\alpha\cos\beta L_3)$$
$$+C_{17}e^{-\alpha L_3}(\alpha\sin\beta L_3+\beta\cos\beta L_3)\Big]$$
$$+C_{29}=PL_4\sin\theta \tag{59}$$

$$\frac{1}{(\alpha^2+\beta^2)}\Big[C_{10}e^{\alpha L_3}(\beta\sin\beta L_3+\alpha\cos\beta L_3)$$
$$-C_{11}e^{\alpha L_3}(\alpha\sin\beta L_3-\beta\cos\beta L_3)$$
$$-C_{12}e^{-\alpha L_3}(\beta\sin\beta L_3-\alpha\cos\beta L_3)$$
$$+C_{13}e^{-\alpha L_3}(\alpha\sin\beta L_3+\beta\cos\beta L)\Big]$$
$$+C_{27}=-P\sin\theta \tag{60}$$

$$
\begin{aligned}
&- \frac{\quad}{\quad} \Big\{ C_{14} e^{\alpha L_3} \left[2\alpha\beta \sin\beta L_3 - (\alpha^2-\beta^2) \cos\beta L_3 \right] \\
&\qquad - C_{15} e^{\alpha L_3} \left[(\alpha^2-\beta^2) \sin\beta L_3 - 2\alpha\beta \cos\beta L_3 \right] \\
&\qquad - C_{16} e^{-\alpha L_3} \left[-2\alpha\beta \sin\beta L_3 + (\alpha^2-\beta^2) \cos\beta L_3 \right] \\
&\qquad + C_{17} e^{-\alpha L_3} \left[(\alpha^2-\beta^2) \sin\beta L_3 + 2\alpha\beta \cos\beta L_3 \right] \Big\} + \frac{C_{26} L_3}{K}
\end{aligned}
$$

$$
\begin{aligned}
&+ \frac{(1-\nu^2) h^2}{384(1-2\nu) G} \Big[C_{10} e^{\alpha L_3} (\alpha \cos\beta L_3 - \beta \sin\beta L_3) \\
&\qquad + C_{11} e^{\alpha L_3} (\alpha \sin\beta L_3 + \beta \cos\beta L_3) \\
&\qquad - C_{12} e^{-\alpha L_3} (\alpha \cos\beta L_3 + \beta \sin\beta L_3) \\
&\qquad + C_{13} e^{-\alpha L_3} (-\alpha \sin\beta L_3 + \beta \cos\beta L_3) \Big]
\end{aligned}
$$

$$
\begin{aligned}
&- \frac{\nu}{4G} \frac{1}{(\alpha^2+\beta^2)} \Big[C_{10} e^{\alpha L_3} (\beta \sin\beta L_3 + \alpha \cos\beta L_3) \\
&\qquad + C_{11} e^{\alpha L_3} (\alpha \sin\beta L_3 - \beta \cos\beta L_3) \\
&\qquad + C_{12} e^{-\alpha L_3} (\beta \sin\beta L_3 - \alpha \cos\beta L_3) \\
&\qquad - C_{13} e^{-\alpha L_3} (\alpha \sin\beta L_3 + \beta \cos\beta L_3) - C_{27} (\alpha^2+\beta^2) \Big]
\end{aligned}
$$

$$
\begin{aligned}
&+ \frac{4 h^4}{1920 K} \Big\{ C_{14} e^{\alpha L_3} \left[(\alpha^2-\beta^2) \cos\beta L_3 - 2\alpha\beta \sin\beta L_3 \right] \\
&\qquad + C_{15} e^{\alpha L_3} \left[(\alpha^2-\beta^2) \sin\beta L_3 + 2\alpha\beta \cos\beta L_3 \right] \\
&\qquad + C_{16} e^{-\alpha L_3} \left[(\alpha^2-\beta^2) \cos\beta L_3 + 2\alpha\beta \sin\beta L_3 \right] \\
&\qquad + C_{17} e^{-\alpha L_3} \left[(\alpha^2-\beta^2) \sin\beta L - 2\alpha\beta \cos\beta L_3 \right] \Big\}
\end{aligned}
$$

$$
\begin{aligned}
&- \frac{h^2(2+\nu)}{24(1-\nu)} \Big(C_{14} e^{\alpha L_3} \cos\beta L_3 + C_{15} e^{\alpha L_3} \sin\beta L_3 \\
&\qquad + C_{16} e^{-\alpha L_3} \cos\beta L_3 + C_{17} e^{-\alpha L_3} \sin\beta L_3 \Big)
\end{aligned}
$$

$$
+ N_3^T + N_3^m + C_{35} = 0 \tag{61}
$$

$$- \frac{\quad}{\quad} - C_{16} e^{\alpha L_3} (\beta \sin \beta L_3 + \alpha \cos \beta L_3)$$

$$+ C_{16} e^{\alpha L_3} (\alpha \sin \beta L_3 - \beta \cos \beta L_3)$$

$$+ C_{16} e^{-\alpha L_3} (\beta \sin \beta L_3 - \alpha \cos \beta L_3)$$

$$- C_{17} e^{-\alpha L_3} (\alpha \sin \beta L_3 + \beta \cos \beta L_3)$$

$$+ C_{26} = P\cos\theta \tag{62}$$

With the evaluation of all the constants above, the solution is complete, and parametric, design, and analytic studies may be undertaken with the aid of a computer utilizing this analytical solution.

VI. SINGLE LAP JOINT WITH END TABS SUBJECTED TO IN-PLANE LOADS, UNIFORM TEMPERATURE AND MOISTURE CONTENT

Consider the configuration shown in Figure 3. Here, the single lap joint construction utilizes end tabs, the same thickness as the adherends bonded onto the adherends such that the in-plane loads have the resultant at the center of the adhesive and $\theta=0^{\circ}$. This is typical for test pieces used in laboratory evaluation of the adhesive properties.

Again the joint adherends can be divided into four components as shown. Again (1) through (6) may be used four times with appropriate subscripts, and along with (9) and (10) are used to determine the adhesive stresses σ_o and τ_o. Also, the coefficients α and β are determined from (38). The result is a set of 26 equations, 26 unknowns and 26 boundary conditions.

The solutions are found to be:

For component 1:

$$N_{x_1} = P; \quad Q_{x_1} = 0; \quad \phi_1 = 0 \tag{63,64,65}$$

$$M_{x_1} = -\frac{P}{2}(h + \eta \tag{66}$$

$$U_1^{o} = \left(\frac{P + N^T + N^m}{X}\right) X_1 + C_{40} \tag{67}$$

$$w_1^{o} = \frac{P}{2D}(h + \eta)\, X_1^{\,2} + C_{41}\, X_1 + C_{42} \tag{68}$$

For components 2 and 3, equations (18) through (29) can be used. For computational reasons, the reader may wish to change the numbers of the subscripts of the constants C, because they will have differing values for each of the problems considered herein.

For component 4:

$$N_{x_4} = P; \quad Q_{x_4} = 0; \quad \phi_4 = 0 \tag{69,70,71}$$

$$M_{x_4} = +\frac{P}{2}(h + \eta) \tag{72}$$

$$U^{o}_4 = \left(\frac{P+N^T+N^m}{K}\right) X_4 + C_{45} \tag{73}$$

$$w^{o}_4 = -\frac{P}{2D}(h + \eta)\, X_4^{\,2} + C_{43}\, X_4 + C_{44} \tag{74}$$

Again, for the adhesive, Equations (36) and (37) may be used, with changed subscripts, if preferred, for this problem. Also, the roots α and β are determined from Equation (38). The boundary conditions for this problem, see Figure 3, are:

$$\text{at } X_1 = 0;\ U^o{}_1(0) = 0;\ w^o{}_1(0) = 0;\ \phi_1(0) = 0 \tag{75}$$

at $X_1 = L_1$ and $X_2 = 0$; **Same as (40)**

at $X_2 = L_2$; **Same as (41)**

at $X_3 = 0$; **Same as (42)**

at $X_3(L_3)$, $X_4 = 0$ **Same as (43)**

$$\text{at } X_4 = L_4;\quad N_{x_4}(L_4) = P;\quad X_x(L_4) = 0;\quad \phi_x(L_4) = 0 \tag{76}$$

When (75) and (76) are used in (67) and (68),

$$C_{40} = C_{42} = 0 \tag{77}$$

Again for the boundary conditions to determine the pertinent C_{ij} an 18 x 18 set of equations must be solved. They can be written as the following:

$$\frac{1}{2D}(h + \eta) L_1^2 + C_{41} L_1 = \text{right hand side of (46)} \tag{78}$$

$$0 = \text{right hand side of (47)} \tag{79}$$

$$\frac{-P}{2}(h + \eta) = \text{right hand side of (47a)} \tag{80}$$

$$0 = \text{right hand side of (48)} \tag{81}$$

$$\left(\frac{P+N^T+N^m}{K}\right) L_1 = \text{right hand side of (49)} \tag{82}$$

$$P = \text{right hand side of (50)} \tag{83}$$

The three boundary conditions at $X_2 = L_2$ and the three at $X_3 = 0$ are identical to (51) through (56).

$w_3(L_3) = w_4(0)$ is the same as (57).

$$\text{left hand side of (58)} = 0 \tag{84}$$

$$\text{left hand side of (59)} = \frac{P}{2}(h + \eta) \tag{85}$$

$$\text{left hand side of (60)} = 0 \tag{86}$$

$U_3(L_3) = U_4(0)$ is the same as (61)

Left hand side of (62) = I (87)

With the evaluation of all of the constants above, the solution is complete, and parametric, design and analytic studies may be undertaken with the aid of a computer utilizing this analytical solution.

VII. DOUBLE LAP JOINT SUBJECTED TO IN-PLANE LOADS, UNIFORM TEMPERATURE AND MOISTURE CONTENT

Consider the configuration shown in Figure 4. The double lap joint with identical adherends can be modelled as in Figure 2, with four components if there is a symmetry in geometry and loads in each of the four quadrants of the structure. In a composite adherend construction this means that a $[\ \ ]_{x5}$ construction is required where X is an even number of magnitude 4 or greater in the thicker adherend and X is an even number of magnitude 2 in the thinner ones. For isotropic adherends the geometric symmetry exists automatically. Again, 26 equations, 26 unknowns and 26 boundary conditions result. The coefficients α and β are determined from (38), where for this problem h is replaced by h/2 in (38) and all other pertinent equations.

The solutions are:

For component 1:

$$N_{x_1} = P/2; \quad Q_{x_1} = 0; \quad \phi_{x_1} = 0; \quad M_{x_1} = 0 \qquad (88,89,90,91)$$

$$U_1^{\circ} = \frac{(P/2+N^T+N^m)}{K} X_1 + C_{70} \qquad (92)$$

$$w_1(X_1) = C_{71} X_1 + C_{72} \tag{93}$$

For component 2, equations (18) through (23) can be used, but for computational reasons the numbers used for subscripts may be changed to avoid confusion with the other solutions.

Looking at Figure 4, it is seen that the midsurface of the adherend at the right must remain straight due to symmetry. Since the adherend is thin, i.e., $h \ll L_3$ and $h \ll L_4$, it is therefore accurate to make the following approximations for components 3 and 4, and (24) and (28) are used for N_{x_3} and U_3^o

$$w_3(X) = w_4(X_4) = \phi_{x_3}(X) = \phi_{x_4} = 0$$

$$M_{x_3}(X) = M_{x_4}(X_4) = Q_{x_3}(X) = Q_{x_4}(X_4) = 0 \tag{94}$$

$$N_{x_4} = P/2; \; U_{o_4} = \frac{(P/2+N^T+N^m)}{K} X_4 + C_{75} \tag{95,96}$$

Again for the adhesive, (36) and (37) may be used, changing the subscripts if preferred. The boundary conditions for this problem, depicted in Figure 4 are:

at $X_1 = 0$; Same as (75)

at $X_1 = L_1$ and $X_2 = 0$; Same as (40)

at $X_2 = L_2$; Same as (41)

at $X_3 = 0$; Same as (42)

at $X_3 = L_3$ and $X_4 = 0$; Same as (43)

at $X_4 = L_4$; $N_{x_4} = P/2$; $Q_{x_4}(L_4) = 0$; $\phi_{x_4}(L_4) = 0$ (97)

When (75) is substituted into (92) and (93),

$$C_{70} = C_{72} = 0 \tag{98}$$

For the boundary conditions used to determine the remaining non-zero C_{ij}, a 12 x 12 set of equations must be solved. They can be written as follows:

$C_{71}L_1$ = right hand side of (46) (99)

$\phi_1(L_1) = \phi_2(0)$, Same as (79)

0 = right hand side of (47a) (100)

$Q_1(L_1) = Q_2(0)$, Same as (81)

$$\frac{(P/2+N^T+N^m)}{K} L_1 = \text{right hand side of (49)} \tag{101}$$

$P/2$ = right hand side of (50) (102)

The three boundary conditions at $X_2 = L_2$ are identical (51) through (53) and $N_{x_3}(0) = 0$ identical to (54).

at $X_3 = L_3$ and $X_4 = 0$;

$$\text{left hand side of (61)} = C_{75} \tag{103}$$

$$\text{left hand side of (62)} = P/2 \tag{104}$$

With the evaluation of all the constants above, the solution is complete, and parametric, design and analytical studies may be undertaken.

VIII. DOUBLE DOUBLER JOINT SUBJECTED TO IN-PLANE LOADS, UNIFORM TEMPERATURE AND MOISTURE CONTENT

Consider the configuration shown in Figure 5. The double doubler with identical adherends can be modelled as in Figure 2, with four components if there is a symmetry in geometry and loads in each of the four quadrents of the structure. In a composite adherend construction this that a $[\ \ ]_{x5}$ construction is required where X is an even number of magnitude 4 or greater in the adherends and 2 or greater in the doublers. For isotropic adherends the geometric symmetry exists automatically. Again there are 26 equations, unknowns and boundary conditions. The coefficients α and β are determined from (38), where in this problem h is replaced by h/2 in (38) and all other pertinent equations.

For component 1:

$$N_{x_1} = P/2; \quad Q_1(X_1) = 0; \quad \phi_1(X_1) = 0 \qquad (105,106,107)$$

$$M_{x_1}(X_1) = C_{100} \qquad (108)$$

$$U_{o_1}(X_1) = \frac{(P/2+N^T+N^m)}{K} \qquad (109)$$

$$w_1(X_1) = -\frac{C_{100}\, X_1^2}{2D} + C_{101}\, X_1 + C_{102} \qquad (110)$$

For component 2, (18) through (23) may be used, but for computational reasons the numbers used for subscripts may be changed to avoid confusion with other solutions. For components 3 and 4, (94) through (96) may be used, and (27) and (28) used for N_{x_3} and U_3^o.

Again for the adhesive, (36) and (37) can be used. The boundary conditions for this problem, see Figure 5, are :

$$\text{at } X_1 = 0; \quad Q_{x_1}(0) = 0; \quad \phi_x(0) = 0; \quad U_1^o(0) = 0 \qquad (111)$$

at $X_1=L_1$ and $X_2=0$, at $X_2=L_2$, at $X_3=0$, and at $X_3=L_3$ and $X_4=0$, the boundary conditions are identical to (40) through (43).

at $X_4 = L_4$; Same as (97)

When (111) is substituted into (109) and (110),

$$\bar{C} = 0 \tag{112}$$

Again the boundary conditions to determine the pertinent C_{ij}'s a 14 x 14 set of equations must be solved. They may be written as follows:

$$\frac{C_{100}L_1^{\,2}}{2} + C_{101}L_1 + C_{102} = \text{right side of (46)} \tag{113}$$

Same as (79)

$$C_{100} = \text{right hand side of (47a)} \tag{114}$$

Same as (81)

Same as (101)

Same as (102)

The three boundary conditions at $X_2=L_2$ and the three at $X_2=0$ are identical to (51) through (53) and $N_{x_3}(0) = 0$ identical to (54).

at $X_3=L_3$ and $X_4 = 0$

$$\text{left hand side of (61)} - C_{105} \tag{115}$$

Same as (104)

Upon evaluating the constants above, the solution is complete and can be used for parametric, design and analytical studies.

IX. SINGLE DOUBLER JOINT SUBJECTED TO IN-PHASE LOADS, UNIFORM TEMPERATURE AND MOISTURE CONTENT

Consider the configuration shown in Figure 6. The single doubler joint with identical adherends can be modelled as in Figure 2, with four components if there is a symmetry in geometry and loads in each of the four quadrants of the structure. In a composite adherend construction this means midplane symmetry in both adherends and doubler. For isotropic adherends the symmetry in geometry exists automatically. Again 26 equations, unknowns and boundary conditions are required. The coefficients α and β are determined from (38).

The solutions are:

For component L:

$$N_{x_1} = P; \; Q_{x_1} = 0; \; \phi_1 = 0 \tag{116}$$

$$M_{x_1} = C_{130} \tag{117}$$

$$U_{o_1} = \frac{(P+N^T+N^m)}{K} X_1 + \bar{\bar{C}} \tag{118}$$

$$w_1(X_1) = -\frac{C_{130}X_1^2}{2D} + C_{131} X_1 + C_{132} \tag{119}$$

For components 1 and 3, equations (18) through (29) can be used. For computational reasons, the user may wish to change numbered subscripts to prevent confusion with solutions to the other problems.

For component 4: Use (69) through (71) and (73)

$$M_{x_4} = C_{133} \tag{120}$$

$$w_4^{\,o} = -\frac{C_{133}\, X_4^{\,2}}{2D} + C_{134}\, X_4 + C_{135} \tag{121}$$

Again, the adhesive solutions are given by (36) and (37). The coefficients α and β are found by solving for the roots of (38).

The boundary conditions for this problem are:

at $X_1=0$: Use (111)

At $X_1=L_1$ and $X_2=0$, at $X_2=L_2$, at $X_3=0$ and $X_3=L_3$ and $X_4=0$ the boundary conditions are identical to (40) through (43)

at $X_4=L_4$; Use (76).

From the boundary conditions at $X_1=0$, $\bar{\bar{C}} = 0$.

For the remaining boundary conditions the determination of the C_{ij} require solutions to the solutions of an 18 x 18 set of equations as shown below:

$$\frac{-C_{130}L_1^{\,2}}{2} + C_{131}\, L_1 + C_{132} = \text{right hand side of (46)} \tag{122}$$

$$C_{130} = \text{right hand side of (47a)} \tag{123}$$

Same as (79), (81), (82), (83)

The three boundary conditions at $h_1 = L_1$ and the three at $h_1 = [illegible]$ are identical to (51) through (56).

$$\text{left hand side of (57)} = C_{135} \tag{124}$$

Same as (84), (86), (87)

$$\text{left hand side of (59)} = C_{133} \tag{125}$$

$$\text{left hand side of (61)} = C_{135} \tag{126}$$

With the evaluation of all constants above the solution is complete. Parametric, design and analytical studies can be undertaken for design and optimization.

X. CONCLUSION

Through the above, many practical adhesive bond configurations can be designed, analyzed and optimized, and various configurations can be compared. In essence, one good computer program, utilizing the above analytical solutions, can efficiently detail stresses, and deformations throughout the adhesive film and the adherends in each of the five configurations studied.

Although the most elementary solutions have been shown explicitly herein (i.e., isotropic adherends, constant temperature and humidity), solutions of a very general anisotropy of the adherends, transient temperature and humidity profiles varying in both the axial and thickness directions, time dependent in-plane mechanical loads, and lateral

pressures can be obtained using the Wetherhold-Vinson model[illegible]. The some of these will be found in an unabridged report[illegible] to be published shortly.

REFERENCES

1. Zumsteg, J.R. and Vinson, J.R., "On the Analysis and Design of Several Configurations of Adhesive Joints in Structures of Composite Materials", MAE TR 222, University of Delaware, July 1979.

2. Volkersen, O., "Die Niet Kraftverteilung in Zugbeanspruchten Nietverbindungen mit Konstantan Laschenquerschnitten", Luftfahrtforschungen, 15, pp. 41-47, 1938.

3. DeBruyne, N.A., "The Strength of Glued Joints", Aircraft Engineering, 16, pp. 115-118, 1944.

4. Goland, M., and Reissner, E., "Stresses in Amented Joints", ASME Journal of Applied Mechanics, 11, pp. A17-A27, 1944.

5. Szepe, F., "Strength of Adhesive-Bonded Lap Joints with Respect to Change of Temperature and Fatigue", Experimental Mechanics, 6, pp. 280-286, 1966.

6. Kutscha, D., and Hofer, K.E. Jr., "Feasibility of Joining Advanced Composite Flight Vehicle Structures", AFML-TR-68-391, January, 1969 (AD 690616).

7. Lehman, G.M., and Hawley, A.V., "Investigation of Joints in Advanced Fibrous Composites for Aircraft Structures", AFFDL-TR-69-43, Vol. 1, June 1969.

8. Dickson, J.N., Hsu, T.M. and McKinney, J.M., "Development of an Understanding of the Fatigue Phenomenon of Bonded and Bolted Joints in Advanced Filamentary Composite Materials, Vol. 1, Analysis Methods", AFFDL-TR-72-64, June 1972 (AD 750 132).

9. Grimes, G.C. et. al., "The Development of Nonlinear Analysis Methods for Bonded Joints in Advanced Filamentary Composite Structures", AFFDL-TR-72-97, September 1972 (AD 905 201).

10. Hart-Smith, L.J., "The Strength of Adhesive Bonded Single-Lap Joints", Douglas Aircraft Company IRAD Technical Report MDC-JD472, April 1970.

11. Hart-Smith, L.J., "Adhesive-Bonded Single Lap Joints", NASA CR-112236, January, 1973.

12. Renton, W.J. and Vinson, J.R., "The Analysis and Design of Anisotropic Bonded Joints, Report No. 2", AFOSR-TR-75-0125, August, 1974.

13. Renton, W.J. and Vinson, J.R., "The Analysis and Design of Composite Material Bonded Joints Under Static and Fatigue Loadings", AFOSR-TR-73-1027, August, 1973.

14. Renton, W.J. and Vinson, J.R., "Analysis of Adhesively Bonded Joints Between Panels of Composite Materials", ASME Journal of Applied Mechanics, pp. 101-106, April, 1977.

15. Srinivas, S., "Analysis of Bonded Joints", NASA TN D-7855, April, 1975 (N 75 - 21673).

16. Oplinger, D.W., "Stress Analysis of Composite Joints", Fourth Army Materials Technology Conference - Advances in Joining Technology, September, 1975.

17. Liu, A.T., "Linear Elastic and Elasto-Plastic Stress Analysis for Adhesive Lap Joints", University of Illinois T & AM Report No. 410, July, 1976.

18. Allman, D.J., "A Theory for Elastic Stresses in Adhesive Bonded Lap Joints", Quarterly Journal of Mechanics and Applied Mathematics, Vol. XXX, pt. 4, 1977.

19. Humphreys, E.A. and Herakovich, C.T., "Nonlinear Analysis of Bonded Joints With Thermal Effects", Virginia Polytechnic Institute and State University Report VPI-E-77-19, June, 1977.

20. Sharpe, W.N. Jr., and Muha, T.J. Jr., "Comparison of Theoretical and Experimental Shear Stress in the Adhesive Layer of a Lap Joint Model, U.S. Army AMMRC MS-74-8 pp. 23-44, (AD 786 543) September, 1974.

21. Wetherhold, R.L. and Vinson, J.R., "An Analytical Model for Bonded Joint Analysis in Composite Structures Including Hygrothermal Effects", AFOSR TR 78-1337, February, 1977.

22. Hart-Smith, L.J., "Adhesive-Bonded Double-Lap Joints", NASA CR-112235, January, 1973.

23. Hart-Smith, L.J., "The Strength of Adhesive Double-Lap Joints", Douglas Aircraft Company IRAD Technical Report MDC - J036F, November, 1969.

24. Keer, L.M. and Chantaramungkorn, K., "Stress Analysis for a Double Lap Joint, ASME Paper 75-APM-7, June, 1975.

25. Sen, J.K., "Stress Analysis of Double-Lap Joints Bonded with a Viscoelastic Adhesive", PhD Dissertation, Southern Methodist University, May, 1977.

26. Vinson, J.R. and Chou, T.W., "Composite Materials and Their Use in Structures", Applied Science Publishers, London, 1975 (available in the U.S.A. through Halsted Press, John Wiley and Sons, New York).

27. Renton, W.J. and Vinson, J.R., "Shear Property Measurements of Adhesives in Composite Material Bonded Joints", ASTM STP 580, pp. 119-132, 1975.

28. Flaggs, D.L., and Vinson, J.R., "Shear Properties of Promising Adhesives for Bonded Joints in Composite Material Structures", AIAA Journal of Aircraft, January, 1979.

29. Pipes, R.B., Vinson, J.R. and Chou, T.W., "On the Hygrothermal Response of Laminated Composite Systems", Journal of Composite Materials, 10, pp. 130-148, April, 1976.

XII. PUBLICATIONS

To date, one publication has emanated from this year of sponsored research. That is AIAA Paper No. 79-0798, "Analysis of Bonded Joints in Composite Materials Structures Including Hygrothermal Effects", by J. R. Vinson and J. R. Zumsteg, University of Delaware, Newark, Delaware, 19711.

It was presented at the 20th AIAA/ASME Structures, Structural Dynamics and Materials Conference, St. Louis, April 1979.

It has not been published in an archival journal to date, awaiting the completion of the Master's thesis of J. R. Zumsteg, in order that parametric study results can be incorporated. The thesis should be completed later in 1981

XIII. PERSONNEL

The research performed under this Contract was done by Dr. J. R. Vinson, H. Fletcher Brown, Professor of Mechanical and Aerospace Engineering, and Mr. James R. Zumsteg, Research Assistant, who is continuing his Master's thesis research while being employed by Lockheed Palo Alto Research Laboratories, Palo Alto, California.

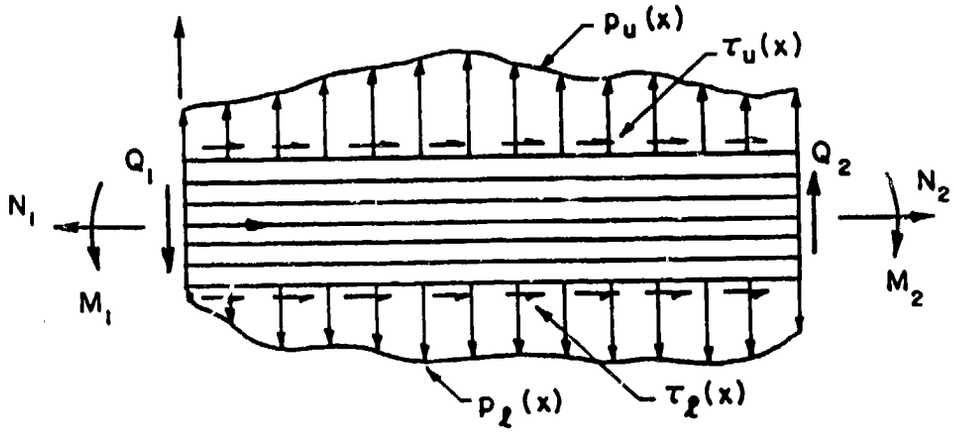

Figure 1. The Wetherhold-Vinson Model

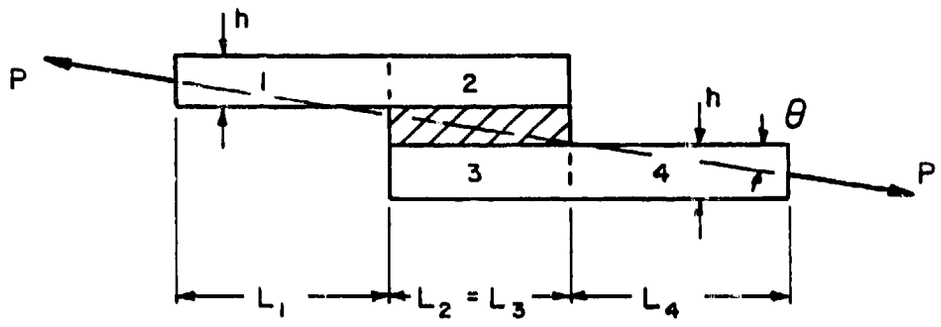

Figure 2. The Single Lap Joint

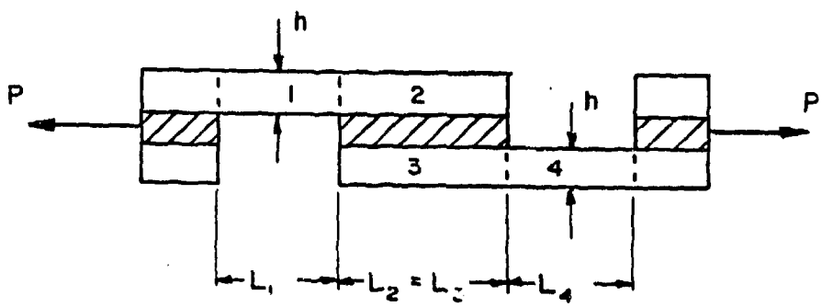

Figure 3. The Single Lap Joint with End Tabs

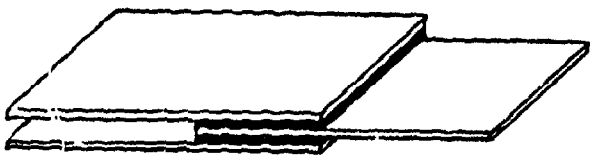

Figure 4. The Double Lap Joint

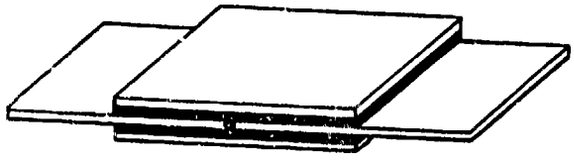

Figure 5. The Double Doubler Joint

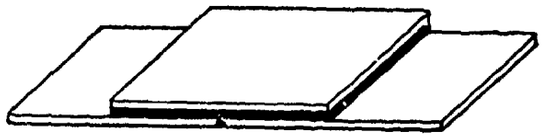

Figure 6. The Single Doubler Joint