AD-A102 223 DAVID W TAYLOR NAVAL SHIP RESEARCH AND DEVELOPMENT CE--ETC F/G 13/10
POWERING PERFORMANCE FOR A NAVAL AUXILIARY OILER (AO 177) USING--ETC(U)
JUN 81 G A HAMPTON
UNCLASSIFIED DTNSRDC/SPD-0544-20 NL

1 OF 1
AD A
102223

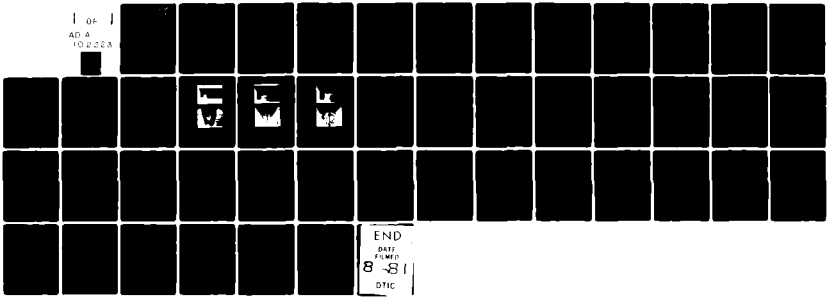

LEVEL II

12

DAVID W. TAYLOR NAVAL SHIP RESEARCH AND DEVELOPMENT CENTER

Bethesda, Maryland 20084

AD A102223

DTNSRDC/SPD-0544-20

POWERING PERFORMANCE FOR A NAVAL AUXILIARY OILER (AO 177) USING VARIOUS STERN FIN CONFIGURATIONS WITH MODEL 5326-1

POWERING PERFORMANCE FOR A NAVAL AUXILIARY OILER (AO 177) USING VARIOUS STERN FIN CONFIGURATIONS WITH MODEL 5326-1

GARY A. HAMPTON

DISTRIBUTION UNLIMITED
APPROVED FOR PUBLIC RELEASE

SHIP PERFORMANCE DEPARTMENT REPORT

JUNE 1981

DTNSRDC/SPD-0544-20

NDW-DTNSRDC 5602/30 (2-80)
(supersedes 3960/46)

MAJOR DTNSRDC ORGANIZATIONAL COMPONENTS

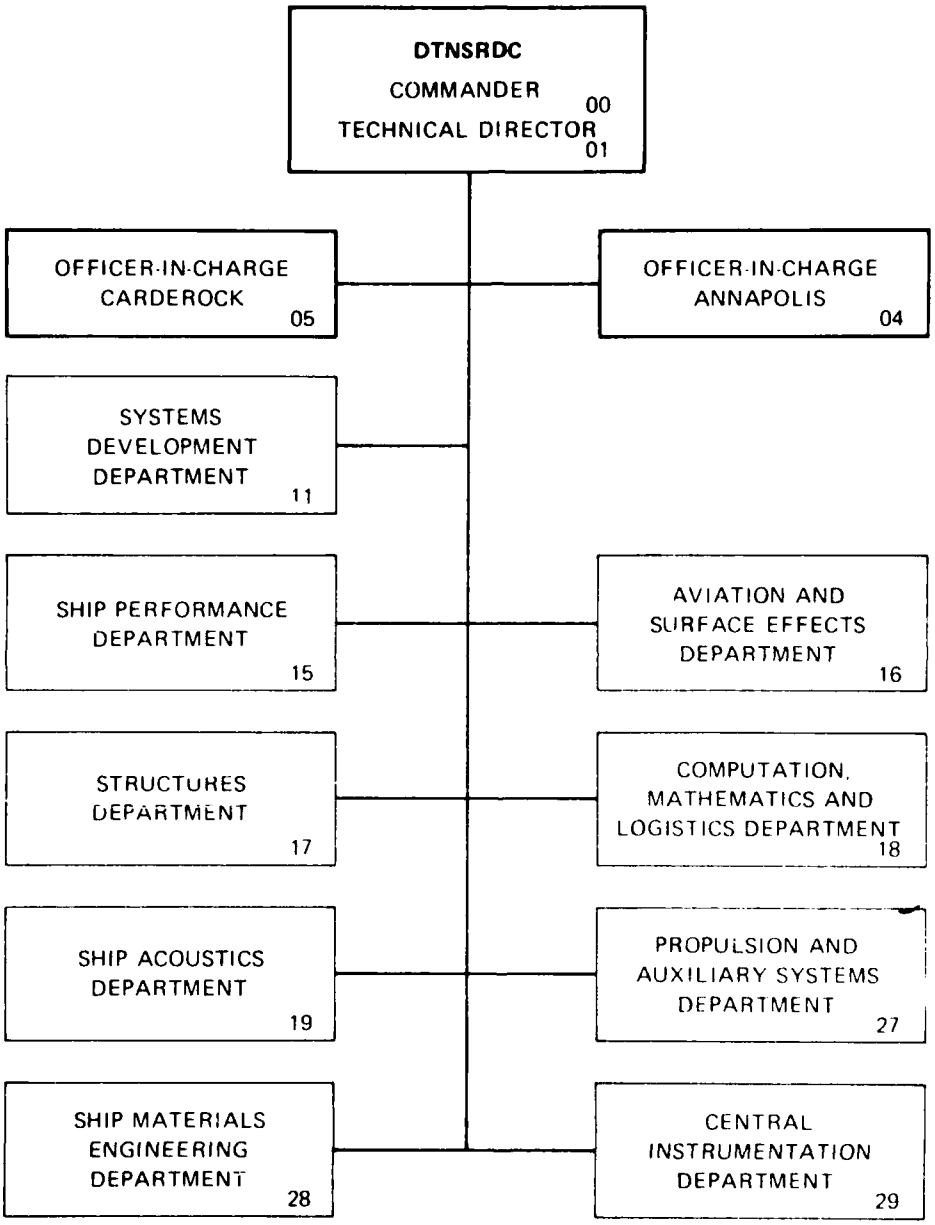

UNCLASSIFIED

SECURITY CLASSIFICATION OF THIS PAGE (When Data Entered)

14

REPORT DOCUMENTATION PAGE

READ INSTRUCTIONS BEFORE COMPLETING FORM

1. REPORT NUMBER: DTNSRDC/SPD-0544-20

2. GOVT ACCESSION NO.: AD A102223

3. RECIPIENT'S CATALOG NUMBER:

6

4. TITLE (and Subtitle): POWERING PERFORMANCE FOR A NAVAL AUXILIARY OILER (AO 177) USING VARIOUS STERN FIN CONFIGURATIONS WITH MODEL 5326-1

5. TYPE OF REPORT & PERIOD COVERED: FINAL

6. PERFORMING ORG. REPORT NUMBER:

10

7. AUTHOR(s): GARY A. HAMPTON

8. CONTRACT OR GRANT NUMBER(s): WR20182, 1-1532-116-55

9. PERFORMING ORGANIZATION NAME AND ADDRESS: DAVID TAYLOR NAVAL SHIP R&D CENTER, SHIP PERFORMANCE DEPT., BETHESDA, MD 20084

10. PROGRAM ELEMENT, PROJECT, TASK AREA & WORK UNIT NUMBERS:

11. CONTROLLING OFFICE NAME AND ADDRESS: NAVAL SEA SYSTEMS COMMAND (3213), WASHINGTON, D. C. 20362

12. REPORT DATE: JUN[redacted]981

13. NUMBER OF PAGES: 44

14. MONITORING AGENCY NAME & ADDRESS (if different from Controlling Office): 12 45

15. SECURITY CLASS. (of this report): UNCLASSIFIED

15a. DECLASSIFICATION/DOWNGRADING SCHEDULE:

16. DISTRIBUTION STATEMENT (of this Report):

DISTRIBUTION UNLIMITED
APPROVED FOR PUBLIC RELEASE

17. DISTRIBUTION STATEMENT (of the abstract entered in Block 20, if different from Report):

18. SUPPLEMENTARY NOTES:

19. KEY WORDS (Continue on reverse side if necessary and identify by block number):

TUNNEL-FIN
ACCELERATING-FIN
PROPULSION
RESISTANCE
TRIM

20. ABSTRACT (Continue on reverse side if necessary and identify by block number):

Resistance and propulsion experiments were conducted with Model 5326-1 to aid in the resolution of the propeller cavitation and airborne noise problem experienced by the Auxiliary Oiler AO 177 and to validate possible remedies. The experimental program involved the evaluation of two tunnel-fin configurations and one accelerating-fin configuration fitted to the stern of the model. The results of the resistance and propulsion experiments show that the addition of the fins did not significantly change the propulsion performance.

DD FORM 1 JAN 73 1473 EDITION OF 1 NOV 65 IS OBSOLETE
S/N 0102-LF-014-6601

UNCLASSIFIED

SECURITY CLASSIFICATION OF THIS PAGE (When Data Entered)

34694

TABLE OF CONTENTS

LIST OF FIGURES

LIST OF FIGURES (CONTINUED)

LIST OF TABLES

NOTATION

C_A	Correlation allowance
D	Propeller diameter
J_T	Advance coefficient based on thrust identity
K_Q (KQ)*	Torque coefficient of propeller, $Q/\rho n^2 D^5$
K_T (KT)	Thrust coefficient of propeller, $T/\rho n^2 D^4$
n	Revolutions per second
P_D	Delivered power
P_E	Effective power
Q	Torque
RPM	Revolutions per minute
T	Thrust
1-t (1-THDF)	Thrust deduction factor
V_A	Speed of advance of propeller
$1-w_Q$ (1-WFTQ)	Taylor wake fraction determined from torque identity
$1-w_T$ (1-WFTT)	Taylor wake fraction determined from thrust identity
η_D (ETAD)	Propulsive efficiency
η_H (ETAH)	Hull efficiency $(1-t)/(1-w_T)$
η_O (ETAO)	Propeller efficiency in open water $(T\ V_A/2\pi\ Qn)$
η_R (ETAR)	Relative-rotative efficiency
ρ	Mass density

*Symbols in parentheses are computer-compatible notation used in computer generated tables.

ABSTRACT

Resistance and propulsion experiments were conducted with Model 5326-1 to aid in the resolution of the propeller cavitation and airborne noise problem experienced by the Auxiliary Oiler AO 177 and to validate possible remedies. The experimental program involved the evaluation of two tunnel-fin configurations and one accelerating-fin configuration fitted to the stern of the model. The results of the resistance and propulsion experiments show that the addition of the fins did not significantly reduce the propulsion performance.

ADMINISTRATIVE INFORMATION

This work was funded by the Naval Sea Systems Command (NAVSEA 3213), and was carried out under NAVSEA Work Request Number WR20182, and David Taylor Naval Ship R&D Center (DTNSRDC) Work Unit Number 1-1532-116-55.

INTRODUCTION

At the request of the Naval Sea Systems Command (NAVSEA 3213), a model experimental program was carried out at the David Taylor Naval Ship R&D Center (DTNSRDC) to assist in the resolution of the propeller cavitation and airborne noise problem experienced by the Auxiliary Oiler AO 177.

The AO 177 has a very fine, thin stern providing a highly reduced longitudinal velocity in the vicinity of the top of the propeller plane. Such a phenomenon is likely to cause unsteady cavitation of the propeller blades, which in turn may cause excessive noise and local vibration problems in the stern area of the ship. One proposed remedy was to improve the flow into the propeller by fins installed at the stern of the ship. It was considered that the fins will guide more flow into the propeller plane, reducing or diffusing the severe nonuniformity of the wake distribution.

Four fin configurations were designed and an experimental program was carried out to validate their effectiveness. The experiments for these fins involved visual flow observations and wake survey experiments, the results of which are reported in references 1 and 2*. This report describes the results of the resistance and propulsion experiments using three of the four fin configurations. One of the fin configurations was found to be unacceptable during the flow visualization experiments and was therefore eliminated from the resistance and propulsion phase of the experimental program.

---

*References are listed on page 4.

MODEL DESCRIPTION

Model 5326-1 representing the Auxiliary Oiler AO 177 was previously constructed to a scale ratio of 25.682. The model was appended with bilge keels and rudder.

Two tunnel-fin designs were constructed and fitted to an existing model (Model 5326-1) of the AO 177, according to plans furnished by NAVSEA, entitled, "Flow Improvement Fin," and designated Configuration 1(NAVY) (SK 3213-0026), and Configuration 3(NAVY) (SK 3213-0028). An accelerating-fin was constructed by the Swedish Center for Maritime Research (SSPA) according to plans entitled, "U.S. Navy Fleet Oiler Proposal to Stern Fins," File No. 2564. The accelerating-fin is designated as Configuration 4(SSPA). Illustrations of the fins are shown in Figure 1 (Configuration 1), Figure 2 (Configuration 3), and Figure 3 (Configuration 4). Fitting room photographs of the fins attached to the model are presented in Figures 4 through 6.

EXPERIMENTAL PROCEDURES

Two equivalent ship displacements of 26,390 tons (26 810 tonnes) and 17,270 tons (17 550 tonnes) were investigated at trims of 1.0 ft (0.31 m) by the bow and 3.75 ft (1.14 m) by the stern respectively. Increase in effective horsepower was also investigated by rotating fin Configuration 3(NAVY) 2.5 degrees, leading edge raised 0.75 inches (1.91 cm) model scale.

All calculations were made using the ITTC friction line and a correlation allowance of 0.0005. It was determined from previous experiments that turbulence stimulation was not necessary. Pertinent ship values for each fin configuration are given in Table 1.

Propeller 4677 representing a 21 ft (6.4 m) full scale propeller was used during the model propulsion experiments. Open water characteristics and other model propeller information are given in Appendix A. Table 2 is a listing of all the experimental configurations with the corresponding ship values for the propeller tip position in relation to the ship hull and water surface.

EXPERIMENTAL RESULTS

Propulsion experiments were conducted at an equivalent ship displacement of 26,390 tons (26 810 tonnes), trimmed 1.0 ft (0.31 m) by the bow. A comparison of power, RPM, and propulsive coefficient curves with Fins 1(NAVY) (Exp. 8), Fins 3 (NAVY) (Exp. 10) and Fins 4(SSPA) (Exp. 14) are presented in Figure 7. The powering coefficients are given in Figure 8. A comparison of power, RPM, and propulsive coefficient curves for the without Fins condition (Exp. 2) and with Fins 4(SSPA)

(Exp. 14) are presented in Figure 9. The powering coefficients are given in Figure 10.

Resistance experiments were conducted with tunnel-fin Configuration 3(NAVY) rotated up 2.5 degrees (Exp. 11). The effective horsepower for this experiment is compared with Fins 3(NAVY) as normally attached to the model. These results are presented in Figure 11.

A graph is presented in Figure 12 showing the increase in power when corrected for the additional air drag of the above-water portion of the ship. The method used for this correction is given in Reference 3.

Propulsion experiments were conducted at an equivalent ship displacement of 17,270 tons (17 550 tonnes), trimmed 3.75 ft (1.14 m) by the stern. A comparison of power, RPM, and propulsive coefficient curves for with Fins 1(NAVY) (Exp. 6) and Fins 4(SSPA) (Exp. 16) are presented in Figure 13. The powering coefficients are given in Figure 14. A comparison of power, RPM, propulsive coefficient curves for the without fins configuration (Exp. 4) and with Fins 4(SSPA) (Exp. 16) are presented in Figure 15. The powering coefficients are given in Figure 16.

A comparison of the ship sinkage at various ship speeds is given for all fin configurations. Table 3 gives the sinkage at the equivalent ship displacement of 26,390 tons (26 810 tonnes) and Table 4 gives the sinkage at the equivalent ship displacement of 17,270 tons (17 550 tonnes).

A listing of the predicted powering performance for each model configuration is given in Tables 5 through 12.

DISCUSSION OF RESULTS

For the 26,390 ton (26 810 tonne) displacement at 24,000 shaft horsepower (17 900 kilowatts) the speed loss with Fins 1(NAVY) and Fins 4(SSPA) is approximately 0.2 knots from 21.8 knots for without fins. With Fins 3(NAVY) the speed loss is about 0.4 knots. Raising the leading edge 2.5 degrees increased the effective horsepower for Fins 3(NAVY) about 6 percent.

For the 17,270 ton (17 550 tonne) displacement at 20,000 shaft horsepower (14 900 kilowatts) the speed increased with Fins 1(NAVY) and Fins 4(SSPA) by approximately 0.2 knots from 21.8 knots for without fins.

Sinkage data showed minimal change with the addition of fins at both displacements. The results of the resistance and propulsion experiments show that the addition of fins did not significantly change the propulsion performance.

REFERENCES

1. Hampton, Gary A., "Investigations of Underwater Flow Patterns for Three Tunnel-Fin Configurations for the Naval Auxiliary Oiler (AO 177) Represented by Model 5326-1", DTNSRDC Report SPD-0544-17 (Feb 1981).

2. Hampton, Gary A., "Analysis of Wake Survey for Tunnel-fin and Accelerating-fin Configurations for the Naval Auxiliary Oiler (AO 177) Represented by Model 5326-1", DTNSRDC Report DTNSRDC/SPD-0544-18 (Apr 1981).

3. Wilson, C.J., and Roddy, R.R., "Estimating the Wind Resistance of Cargo Ships and Tankers", DTNSRDC Report 3355 (May 1970).

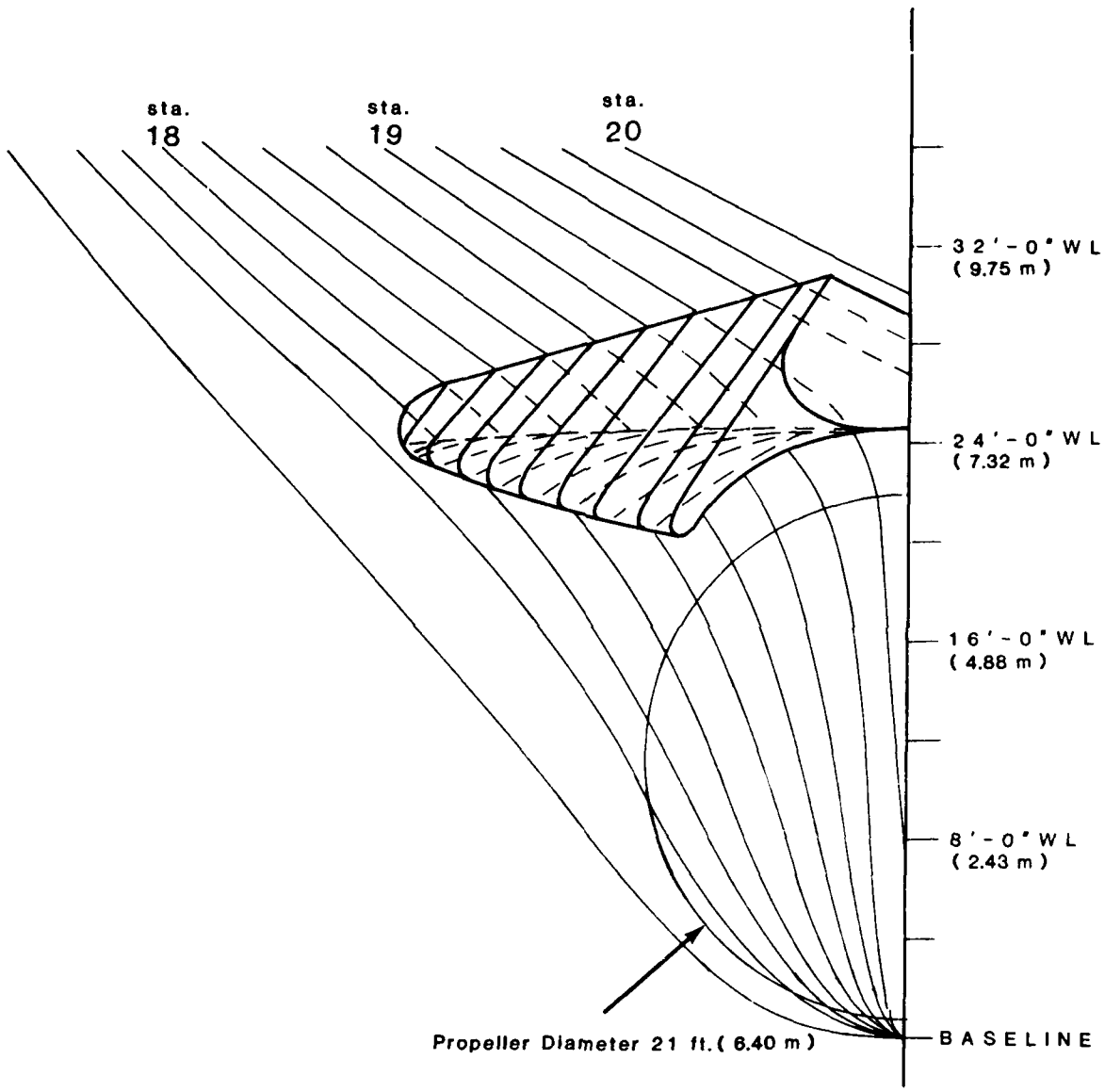

Figure 1 - Illustration of Tunnel-Fin Configuration 1(NAVY)

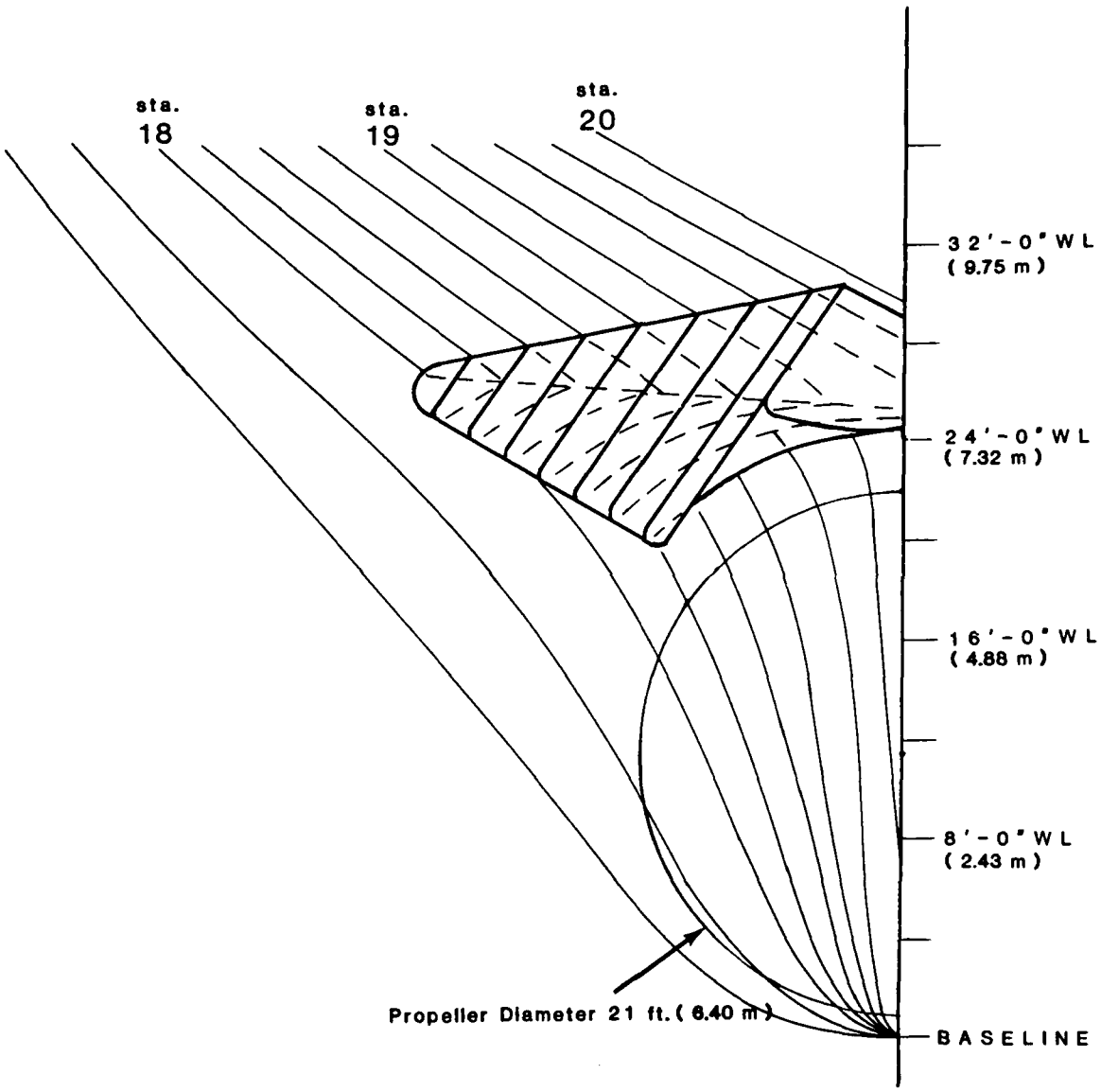

Figure 2 - Illustration of Tunnel-Fin Configuration 3(NAVY)

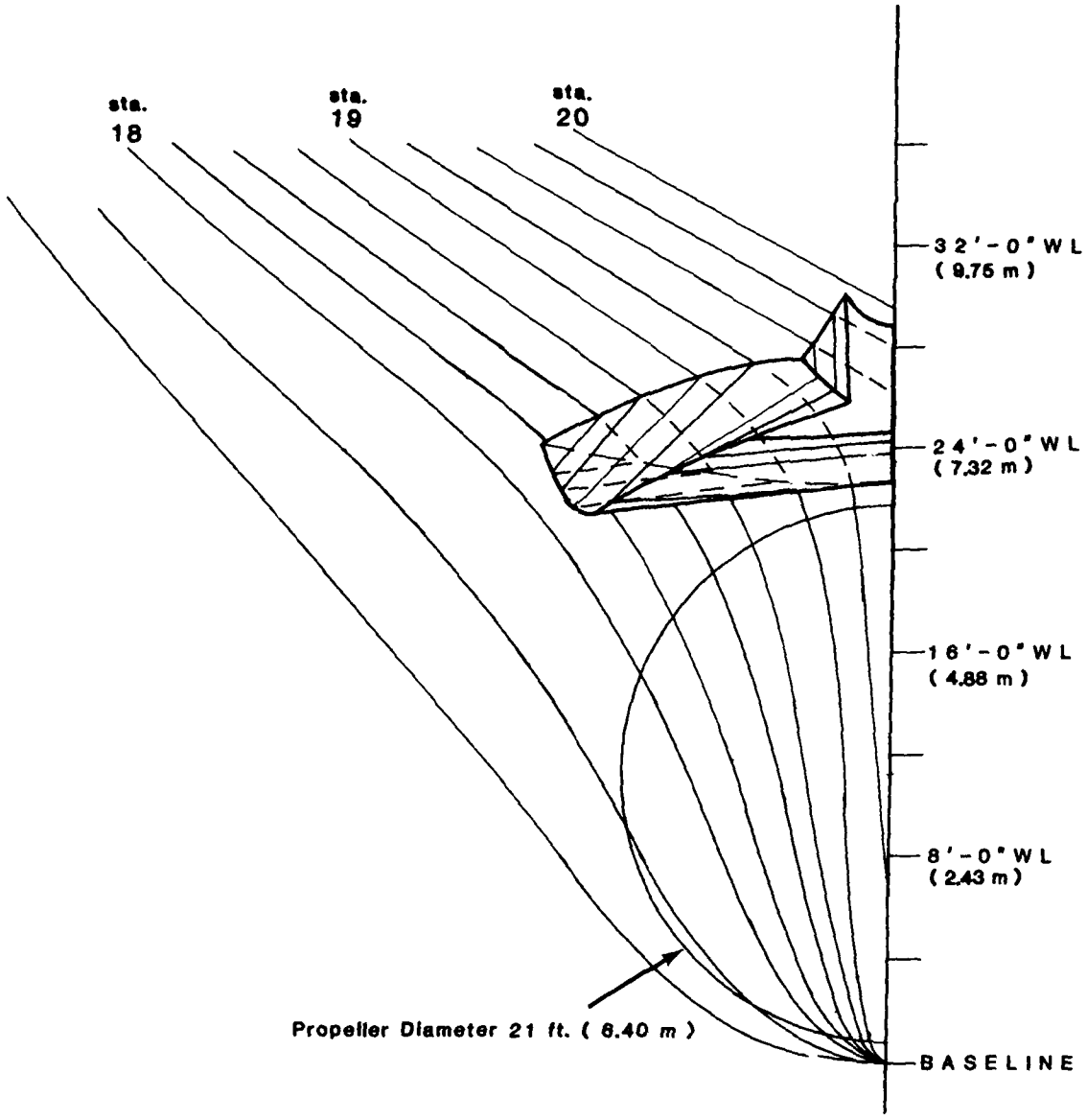

Figure 3 - Illustration of Accelerating-Fin Configuration 4(SSPA)

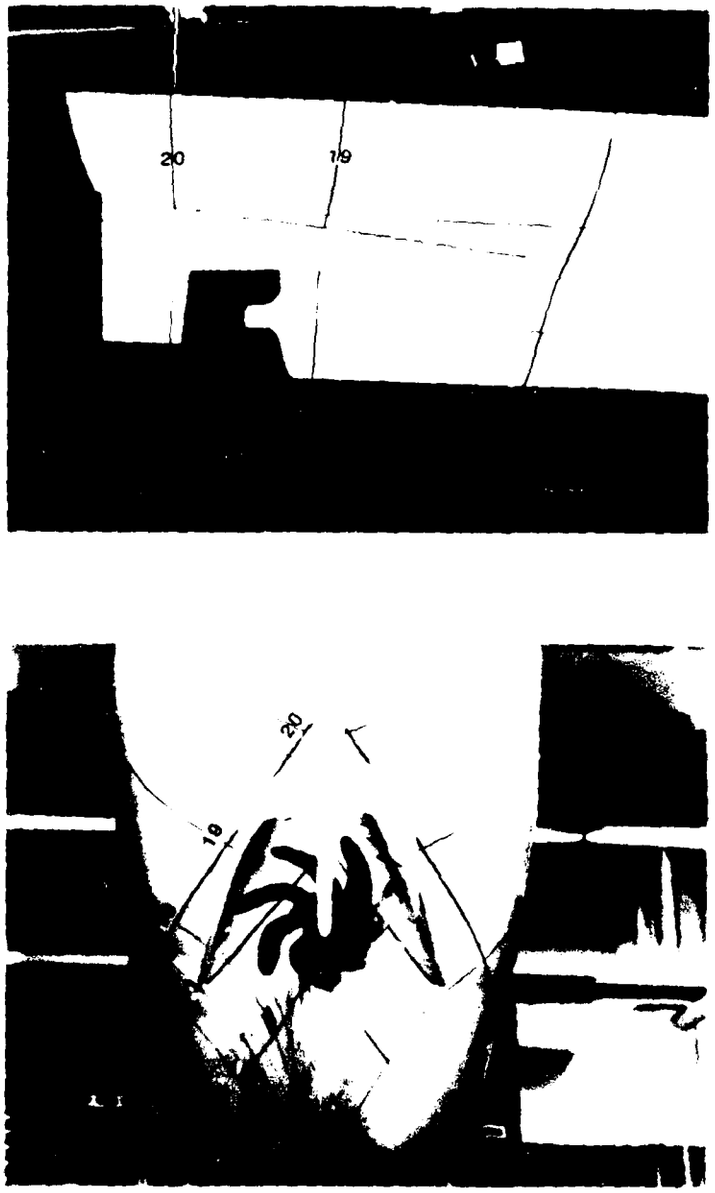

Figure 4 - Fitting Room Photographs of Tunnel-Fin Configuration 1(XX)
Attached to Model

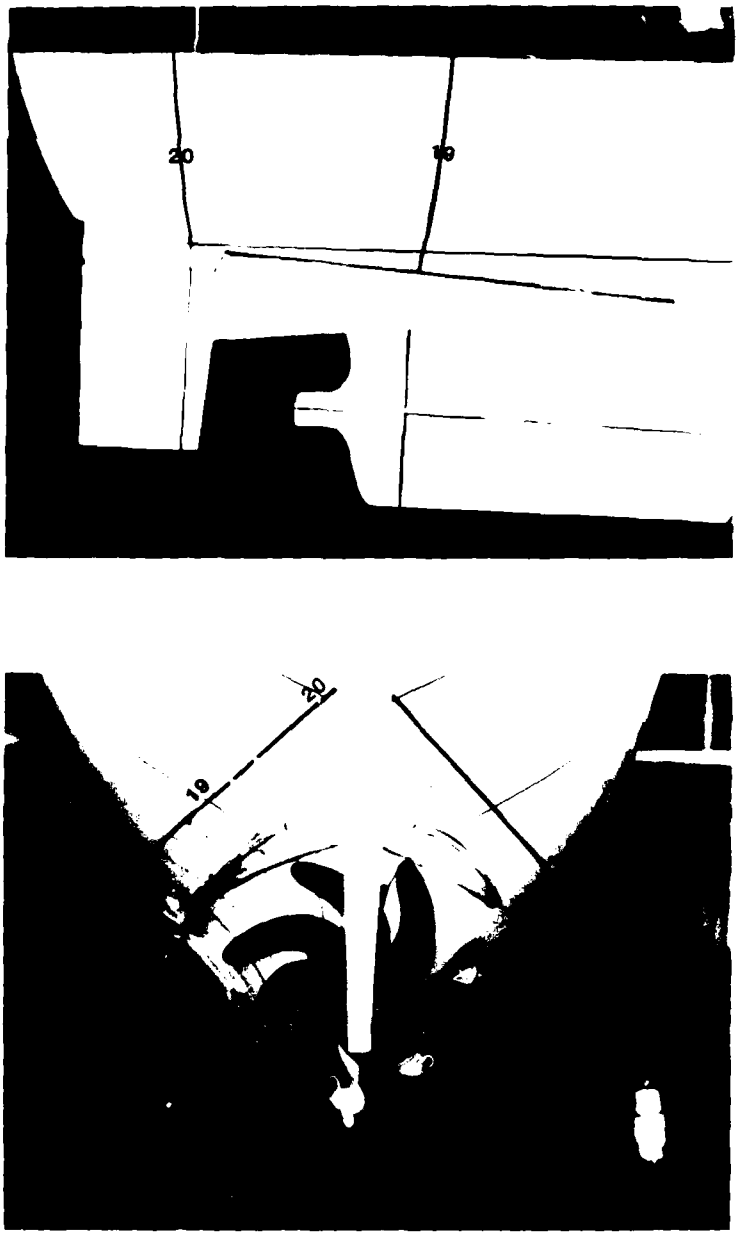

Figure 5 - Fitting Room Photographs of Tunnel-Fin Configuration 3(NAVY) Attached to Model

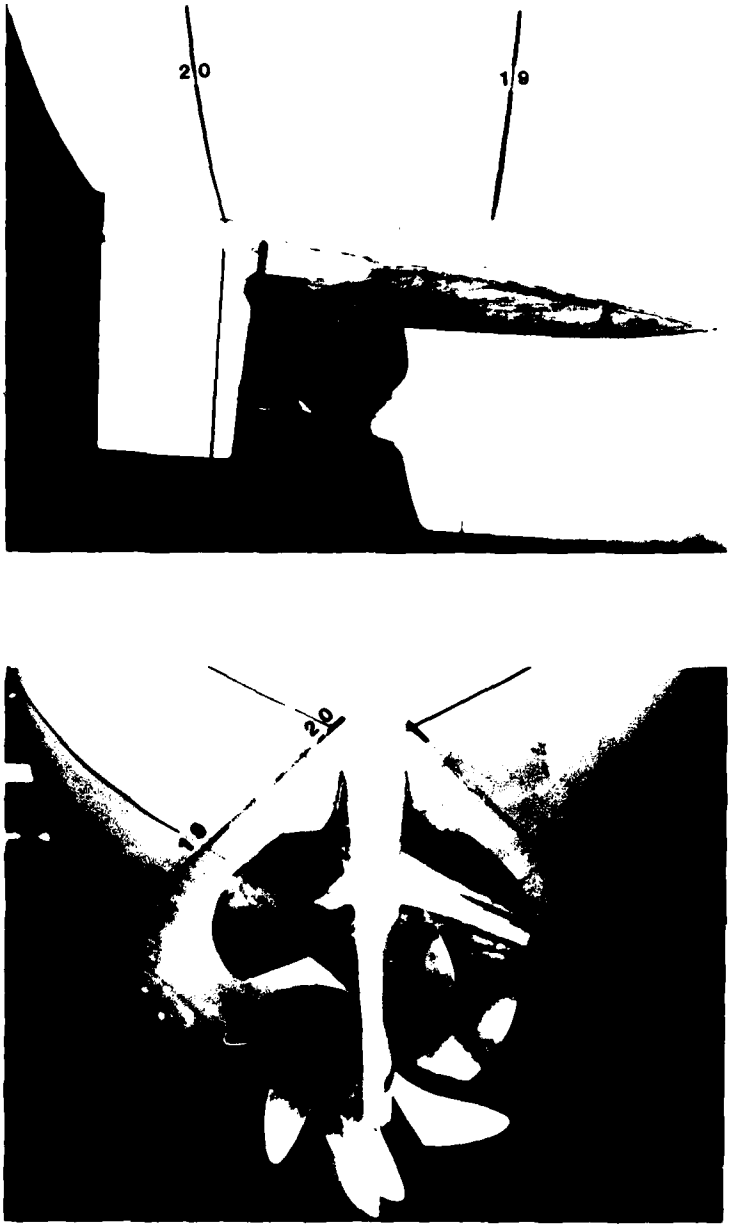

Figure 6 - Fitting Room Photographs of Accelerating-Fin Configuration 4 (SSPA) Attached to Model

Displacement 26,390 tons 26 810 tonnes
Trim 1.0 ft x bow 0.31 m

ITTC Friction Line
$C_A = 0.0005$

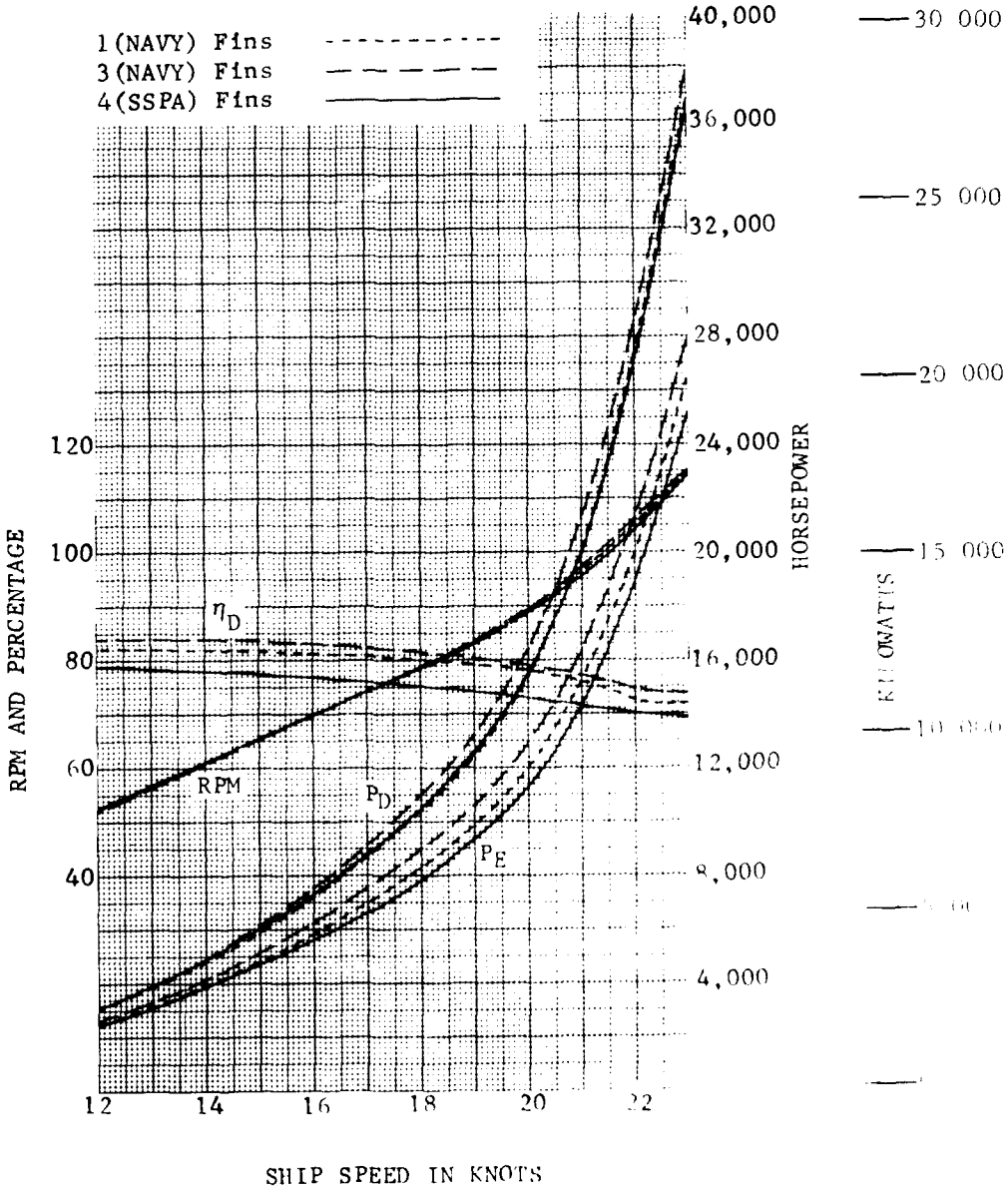

Figure 7 - Comparison of Power, RPM, and Propulsive Coefficient Curves for Fins 1(NAVY) (Exp. 8) Fins 3(NAVY) (Exp 10) and Fins 4(SSPA) (Exp. 14)

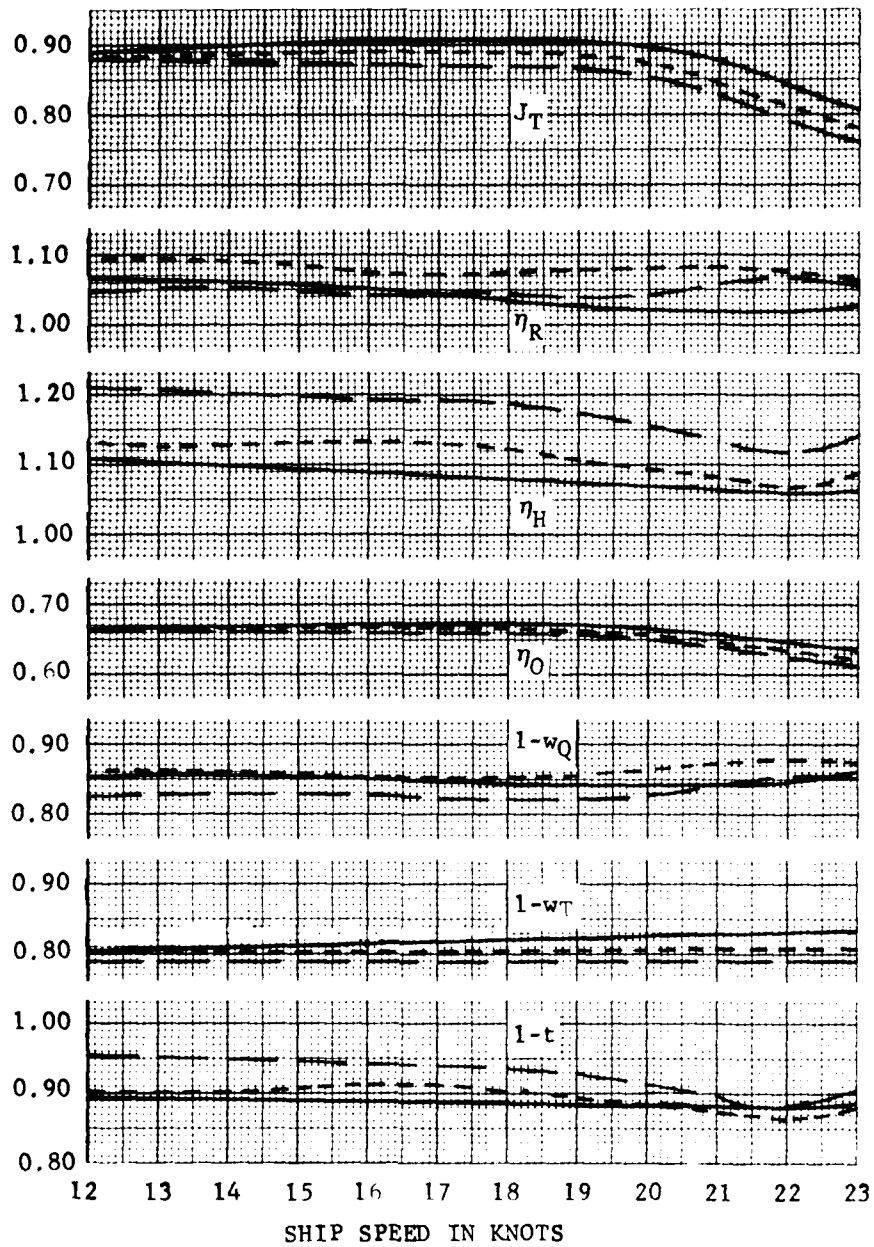

1(NAVY) Fins - - - - - - - - -
3(NAVY) Fins — — — — —
4(SSPA) Fins ————————

Displacement	26,390 tons	26 810 tonnes
Trim	1.0 ft x bow	0.31 m

Figure 8 - Comparison of Derived Powering Coefficients for Fins 1(NAVY) (Exp. 8) Fins 3(NAVY) (Exp. 10) and Fins 4(SSPA) (Exp. 14)

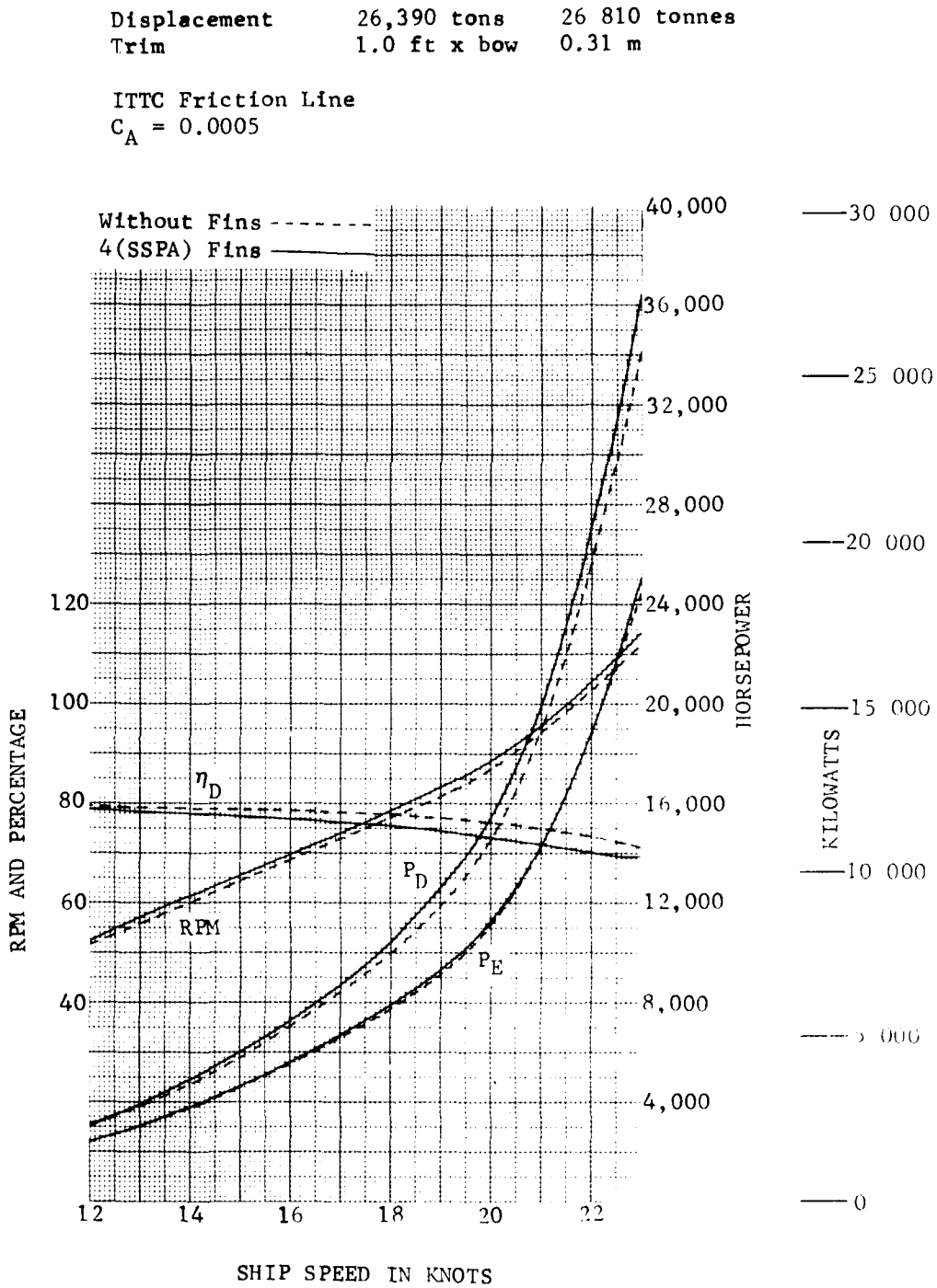

Figure 9 - Comparison of Power, RPM, and Propulsive Coefficient Curves for without Fins (Exp. 2) and with Fins 4(SSPA) (Exp. 14)

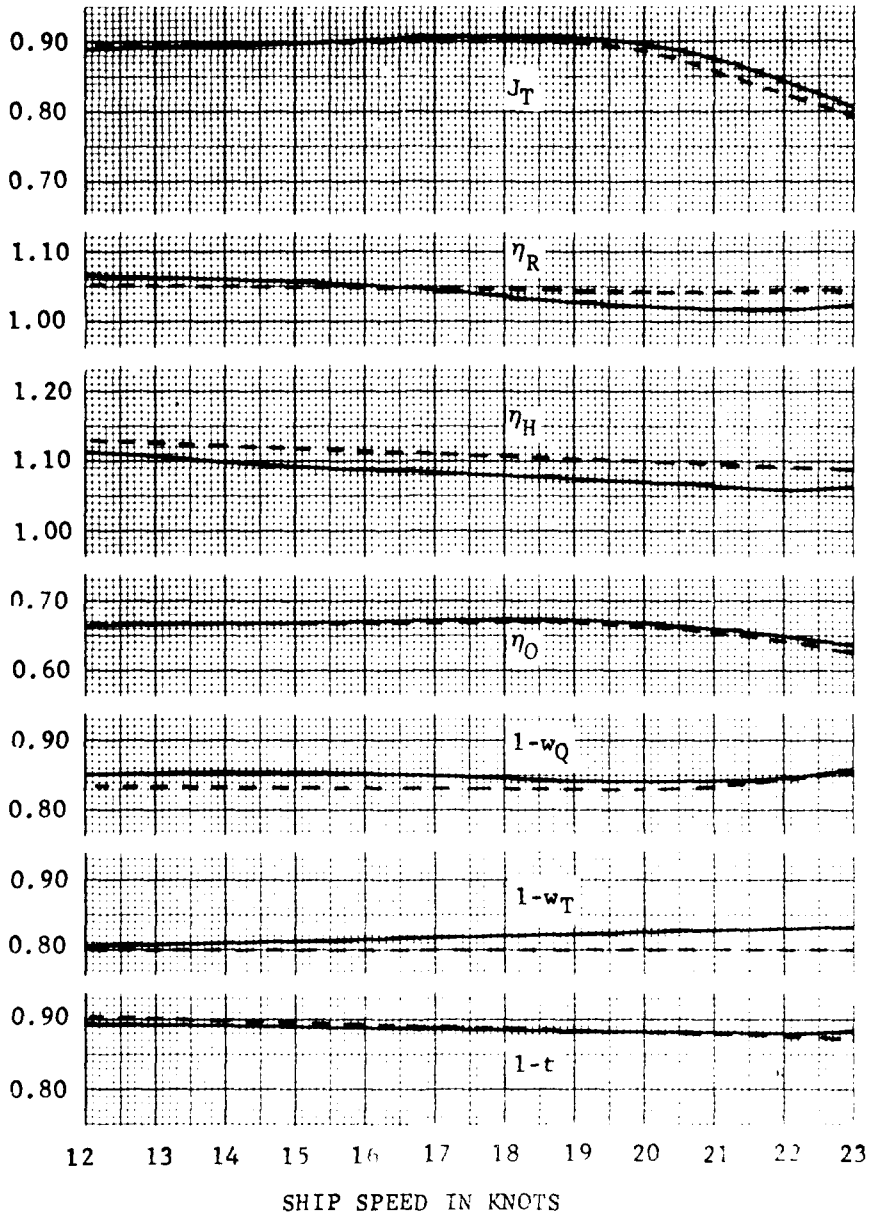

Without Fins - - - - - - - -
4(SSPA) Fins ————————

Displacement	26,390 tons	26 810 tonnes
Trim	1.0 ft x bow	0.31 m

Figure 10 - Comparison of Derived Powering Coefficients for without Fins (Exp. 2) and with Fins 4(SSPA) (Exp. 14)

Displacement 26,390 tons 26 810 tonnes
Trim 1.0 ft x bow 0.31 m

ITTC Friction Line
$C_A = 0.0005$

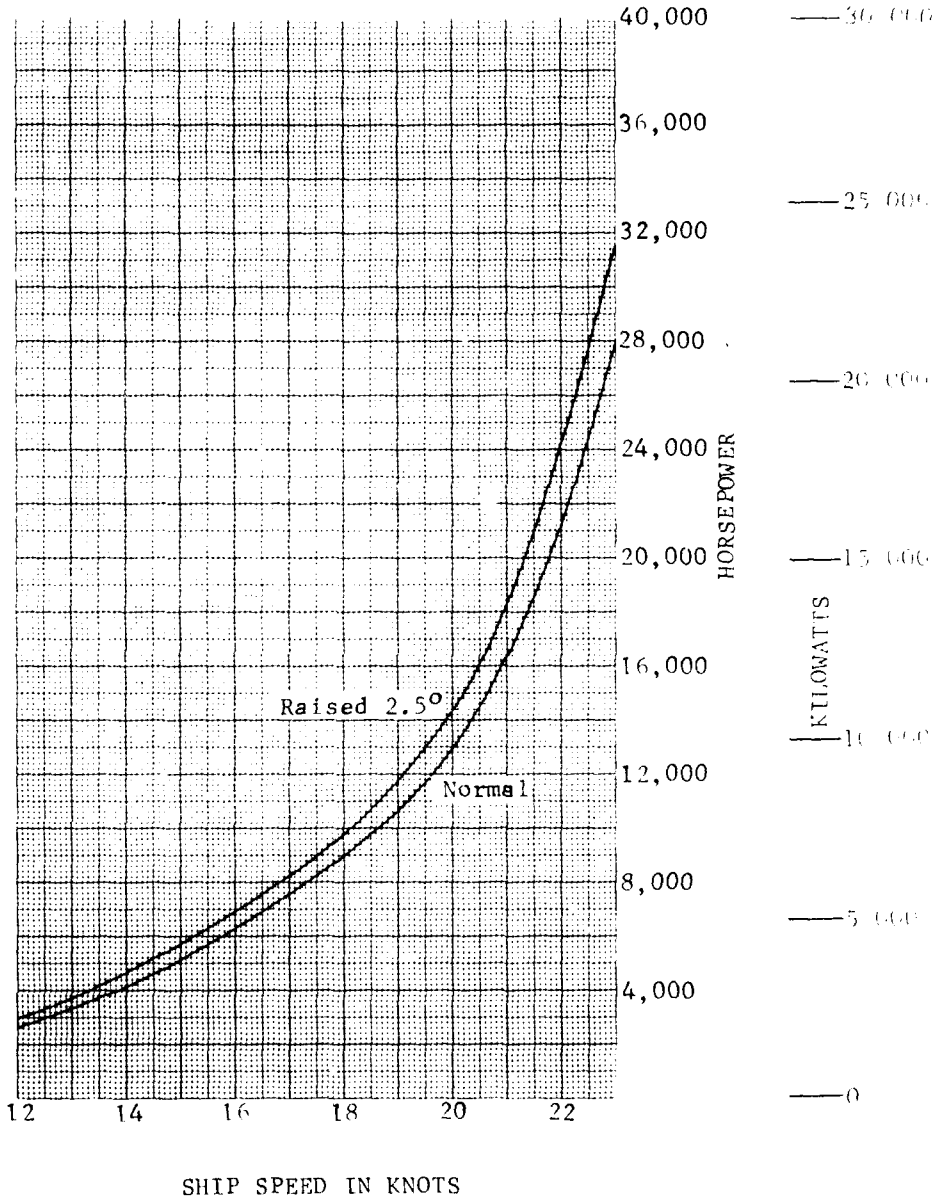

Figure 11 - Comparison of Effective Power Curves for Fins 3(NAVY) (Exp. 10) and Fins 3(NAVY) with Leading Edge Raised 2.5 Degrees (Exp. 11)

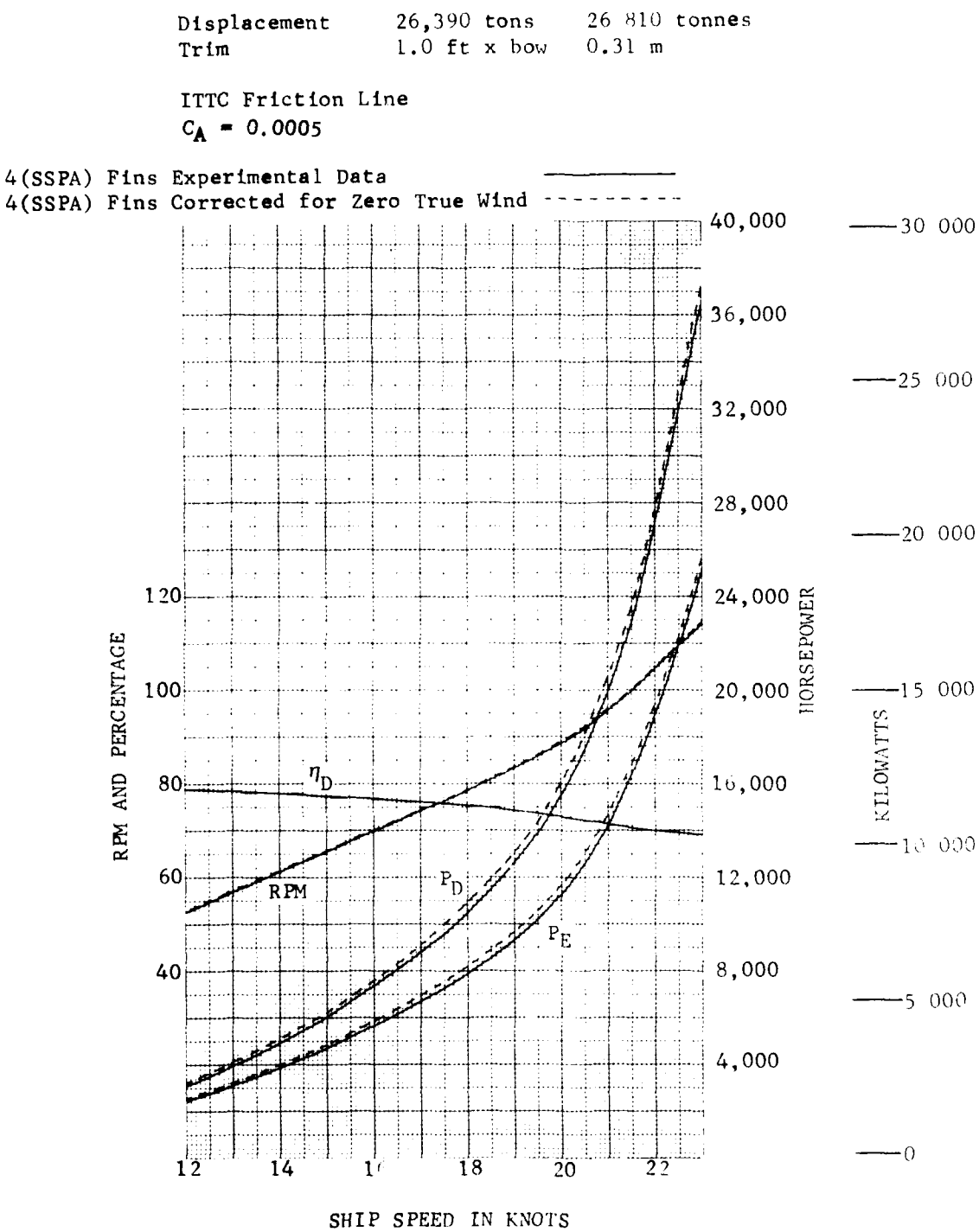

Figure 12 - Power, RPM, and Propulsive Coefficient Curves for Fins 4(SSPA) Corrected for Zero True Wind

Displacement	17,270 tons	17 550 tonnes
Trim	3.75 ft x stern	1.14 m

ITTC Friction Line
$C_A = 0.0005$

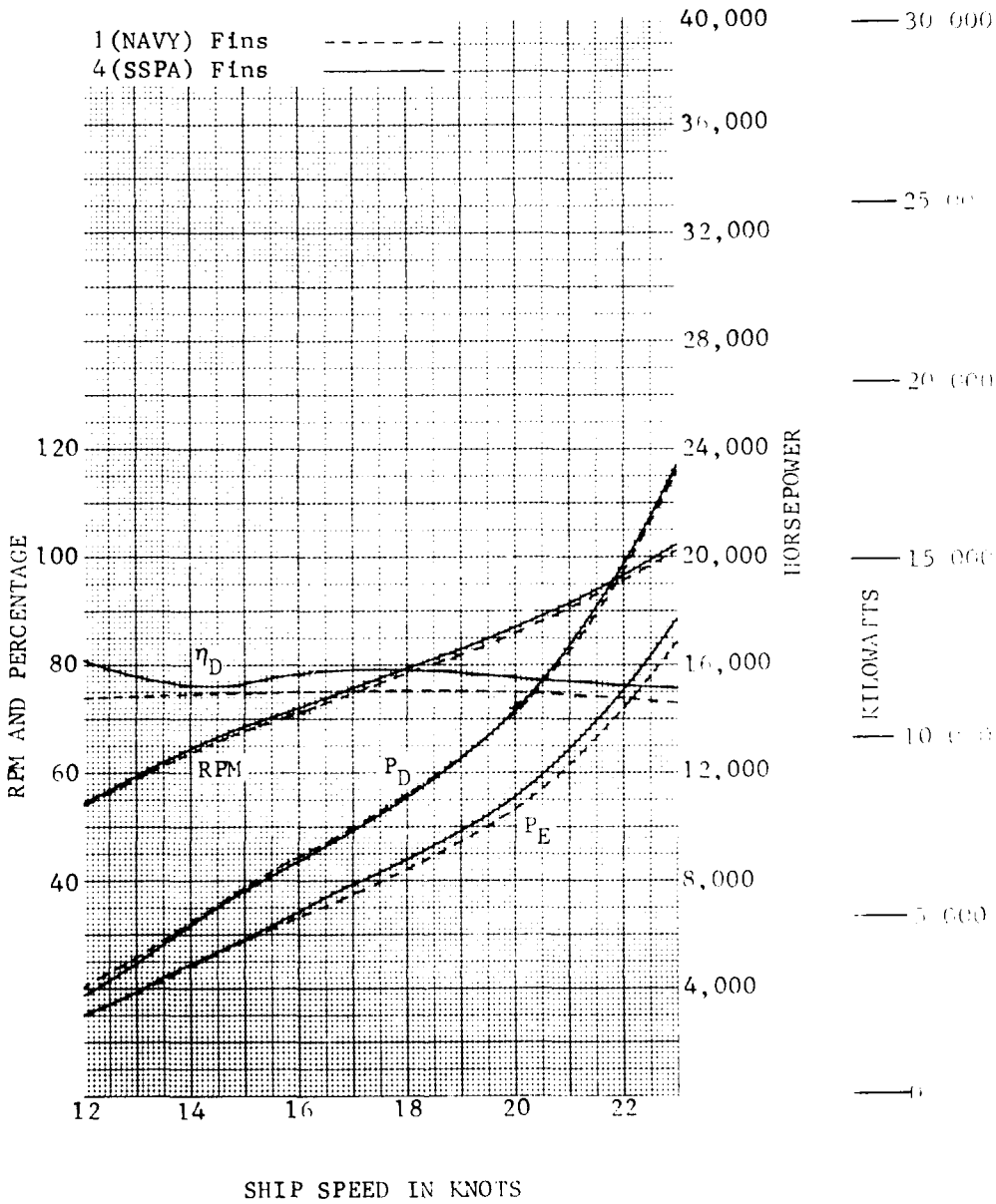

Figure 13 - Comparison of Power, RPM, and Propulsive Coefficient Curves for Fins 1(NAVY) (Exp. 6) and Fins 4(SSPA) (Exp. 16)

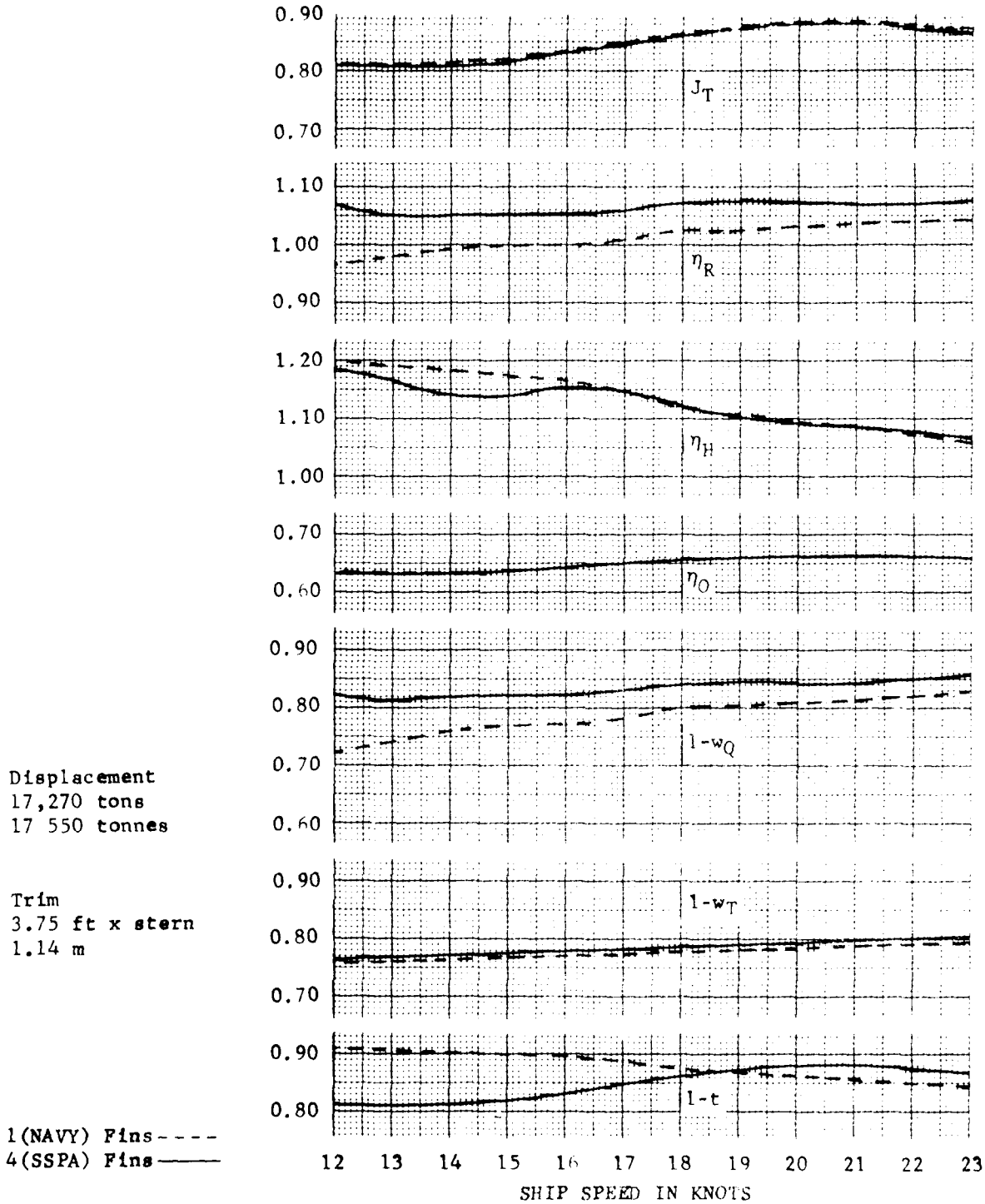

Figure 14 - Comparison of Derived Powering Coefficients for Fins 1(NAVY) (Exp. 6) and Fins 4(SSPA) (Exp. 16)

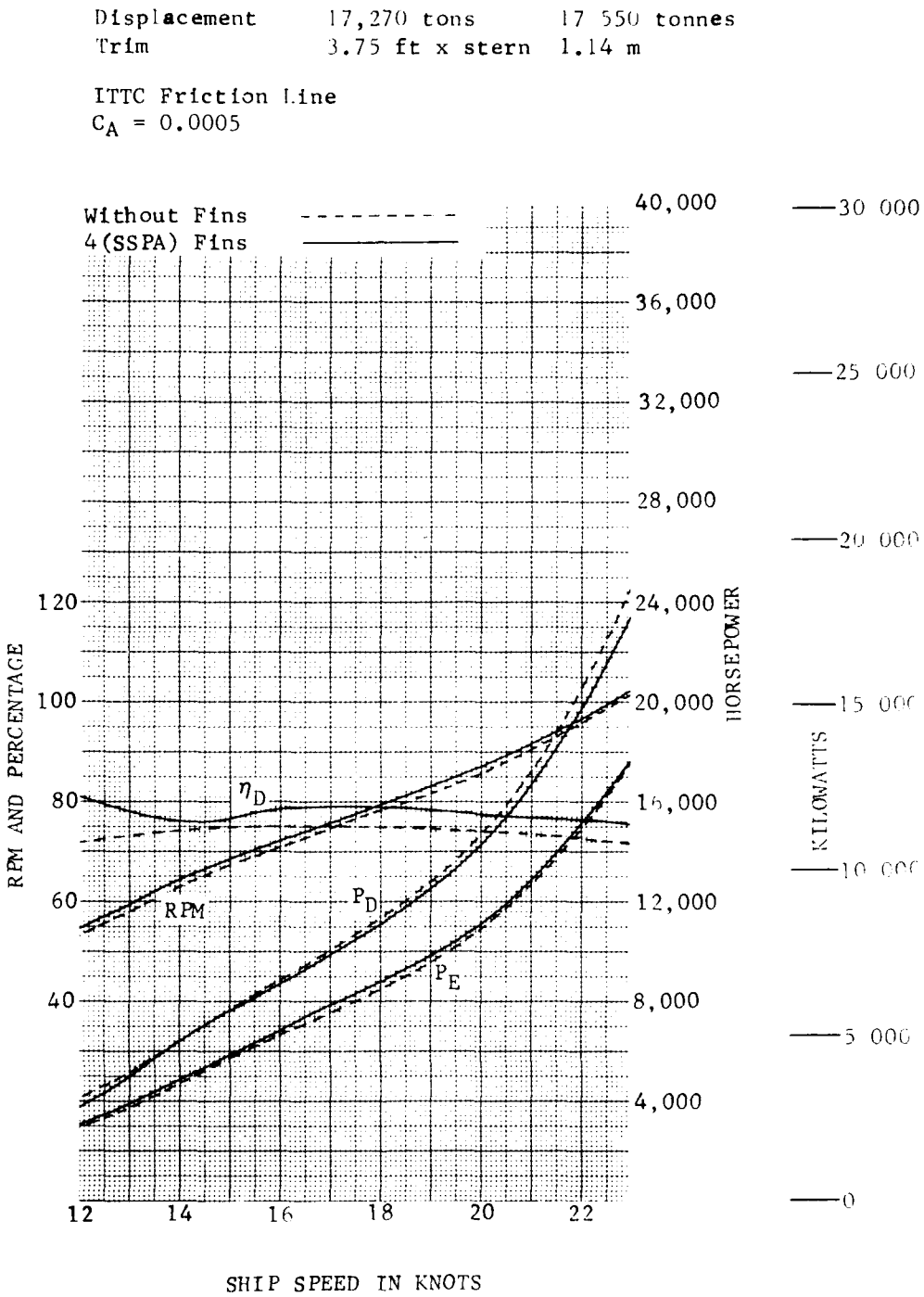

Figure 15 - Comparison of Power, RPM, and Propulsive Coefficient Curves for without Fins (Exp. 4) and with Fins 4(SSPA) (Exp. 16)

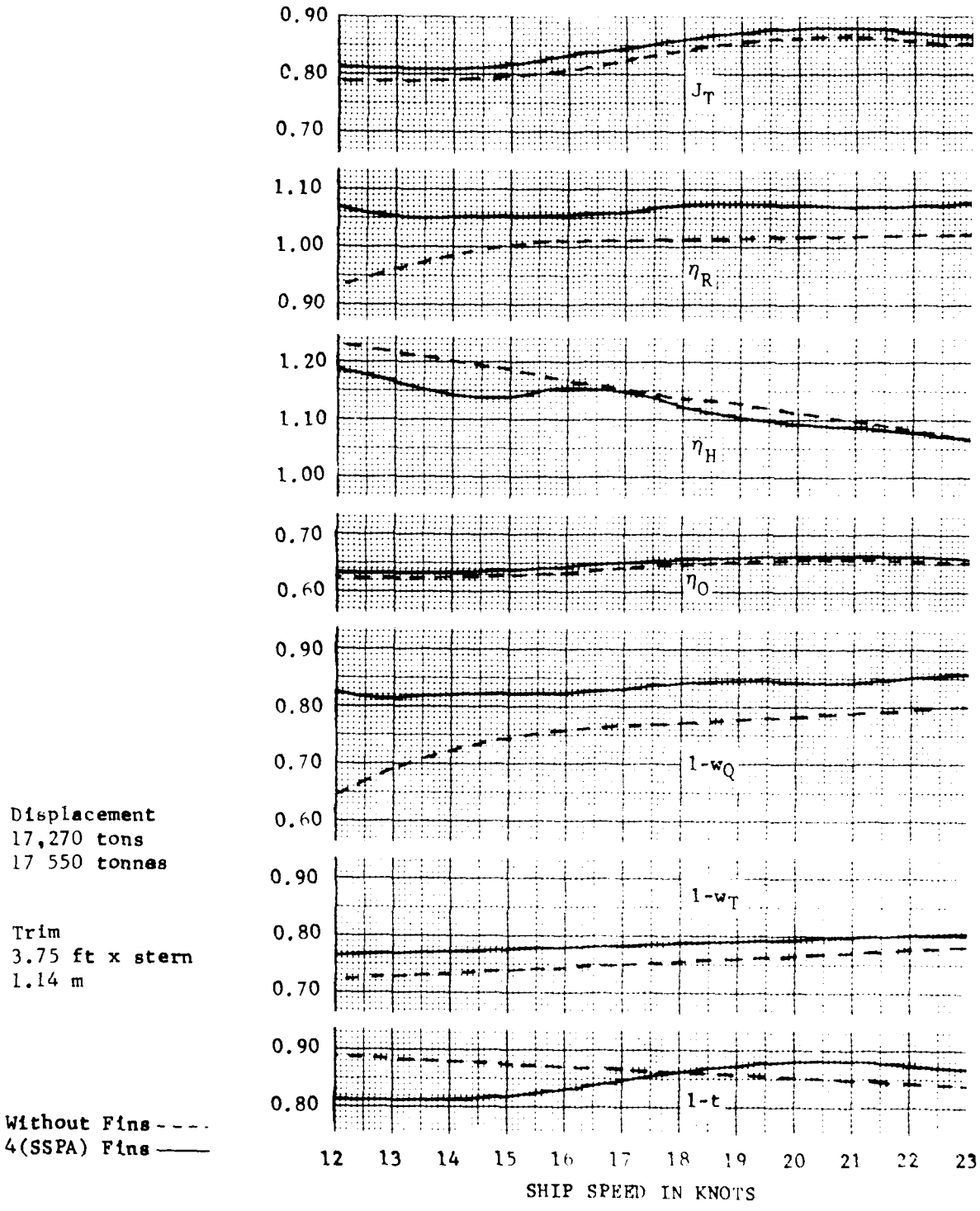

Figure 16 - Comparison of Derived Powering Coefficients for without Fins (Exp. 4) and with Fins 4(SSPA) (Exp. 16)

TABLE 1 - EXPERIMENTAL CONFIGURATIONS AND CORRESPONDING SHIP VALUES

Experiment Number	Fins	Displacement tons	Displacement tonnes	Trim ft	Trim m	Wetted Surface ft^2	Wetted Surface m^2	Draft ft	Draft m
2	none	26,390	26 810	1.0 x bow	0.31	62,187	5777	31.5	9.6
4	none	17,270	17 550	3.75 x stern	1.14	49,955	4641	22.0	6.7
6	1 (Navy)	17,270	17 550	3.75 x stern	1.14	50,231	4667	22.0	6.7
8	1 (Navy)	26,390	26 810	1.0 x bow	0.31	63,573	5906	31.5	9.6
10	3 (Navy)	26,390	26 810	1.0 x bow	0.31	63,382	5888	31.5	9.6
11	3 (Navy)*	26,390	26 810	1.0 x bow	0.31	63,382	5888	31.5	9.6
14	4 (SSPA)	26,390	26 810	1.0 x bow	0.31	63,204	5872	31.5	9.6
16	4 (SSPA)	17,270	17 550	3.75 x stern	1.14	50,896	4728	22.0	6.7

Length	560 ft	170.7 m
Beam	88 ft	26.8 m
Propeller Diameter	21.0 ft	6.40 m

*Leading edge raised 2.5 degrees

TABLE 2 - EXPERIMENTAL CONFIGURATIONS AND CORRESPONDING SHIP VALUES FOR PROPELLER TIP POSITIONS

Experiment Number	Fins	Displacement		Propeller Tips Below Waterline		Propeller Tip Clearance	
		tons	tonnes	ft	m	ft	m
2	none	26,390	26 810	10.2	3.10	6.3	1.92
4	none	17,270	17 550	3.0	0.91	6.3	1.92
6	1 (Navy)	17,270	17 550	3.0	0.91	2.5	0.76
8	1 (Navy)	26,390	26 810	10.2	3.10	2.5	0.76
10	3 (Navy)	26,390	26 810	10.2	3.10	2.6	0.79
11	3 (Navy)*	26,390	26 810	(resistance experiment)			
14	4 (SSPA)	26,390	26 810	10.2	3.10	2.4	0.73
16	4 (SSPA)	17,270	17 550	3.0	0.91	2.4	0.73

*Leading edge raised 2.5 degrees

TABLE 3 - COMPARISON OF SHIP SINKAGE AT A DISPLACEMENT OF 26,390 TONS (26 810 TONNES), TRIMMED 1.0 FT (0.31 m) BY THE BOW

Fins	Without Fins				4(SSPA) Fins				1(NAVY) Fins			
	Bow		Stern		Bow		Stern		Bow		Stern	
V_S	ft	m	ft	m	ft	m	ft	m	ft	m	ft	m
12	0.6	0.18	0.4	0.12	0.7	0.21	0.4	0.12	0.5	0.15	0.3	0.09
13	0.8	0.24	0.4	0.12	0.8	0.24	0.4	0.12	0.6	0.18	0.3	0.09
14	0.9	0.27	0.4	0.12	0.9	0.27	0.4	0.12	0.8	0.24	0.3	0.09
15	1.0	0.30	0.5	0.15	1.0	0.30	0.5	0.15	0.9	0.27	0.4	0.12
16	1.2	0.37	0.5	0.15	1.1	0.34	0.6	0.18	1.1	0.34	0.5	0.15
17	1.4	0.43	0.6	0.18	1.3	0.40	0.6	0.18	1.3	0.40	0.6	0.18
18	1.5	0.46	0.7	0.21	1.5	0.46	0.7	0.21	1.5	0.46	0.7	0.21
19	1.7	0.52	0.8	0.24	1.6	0.49	0.8	0.24	1.7	0.52	0.8	0.24
20	1.9	0.58	0.9	0.27	1.8	0.55	1.0	0.30	1.9	0.58	1.0	0.30
21	2.1	0.64	1.1	0.34	2.0	0.61	1.2	0.37	2.1	0.64	1.2	0.37
22	2.3	0.70	1.3	0.40	2.2	0.67	1.4	0.43	2.3	0.70	1.4	0.43
23	2.6	0.79	1.7	0.52	2.3	0.70	1.7	0.52	2.6	0.79	1.7	0.52

TABLE 3 - (Continued) COMPARISON OF SHIP SINKAGE AT A DISPLACEMENT OF 26,390 TONS (26 810 TONNES), TRIMMED 1.0 FT (0.31 m) BY THE BOW

Fins	3(NAVY) Fins				3(NAVY) Fins*			
	Bow		Stern		Bow		Stern	
V_S	ft	m	ft	m	ft	m	ft	m
12	0.8	0.24	0.4	0.12	0.9	0.27	0.4	0.12
13	0.8	0.24	0.4	0.12	1.0	0.30	0.3	0.09
14	0.9	0.27	0.4	0.12	1.1	0.34	0.3	0.09
15	1.0	0.30	0.4	0.12	1.2	0.37	0.3	0.09
16	1.2	0.37	0.4	0.12	1.3	0.40	0.3	0.09
17	1.4	0.43	0.5	0.15	1.4	0.43	0.4	0.12
18	1.6	0.49	0.6	0.18	1.6	0.49	0.5	0.15
19	1.8	0.55	0.8	0.24	1.8	0.55	0.5	0.15
20	2.0	0.61	0.9	0.27	2.0	0.61	0.6	0.18
21	2.2	0.67	1.0	0.30	2.2	0.67	0.7	0.21
22	2.3	0.70	1.2	0.37	2.4	0.73	0.8	0.24
23	2.4	0.73	1.4	0.43	2.6	0.79	1.0	0.30

*Leading edge raised 2.5 degrees.

TABLE 4 - COMPARISON OF SHIP SINKAGE AT A DISPLACEMENT OF 17,270 TONS (17 550 TONNES), TRIMMED 3.75 FT (1.14 m) BY THE STERN

Fins	Without Fins				4(SSPA) Fins				1(NAVY) Fins			
	Bow		Stern		Bow		Stern		Bow		Stern	
V_S	ft	m	ft	m	ft	m	ft	m	ft	m	ft	m
12	0.4	0.12	0.6	0.18	0.4	0.12	0.5	0.15	0.4	0.12	0.5	0.15
13	0.4	0.12	0.6	0.18	0.3	0.09	0.5	0.15	0.4	0.12	0.5	0.15
14	0.4	0.12	0.7	0.21	0.3	0.09	0.6	0.18	0.4	0.12	0.5	0.15
15	0.4	0.12	0.8	0.24	0.4	0.12	0.7	0.21	0.5	0.15	0.6	0.18
16	0.5	0.15	0.9	0.27	0.4	0.12	0.8	0.24	0.6	0.18	0.7	0.21
17	0.5	0.15	1.1	0.34	0.5	0.15	1.0	0.30	0.7	0.21	0.8	0.24
18	0.6	0.18	1.2	0.37	0.5	0.15	1.1	0.34	0.8	0.24	0.9	0.27
19	0.7	0.21	1.4	0.43	0.6	0.18	1.3	0.40	0.9	0.27	1.0	0.30
20	0.8	0.24	1.6	0.49	0.7	0.21	1.5	0.46	1.0	0.30	1.2	0.37
21	0.9	0.27	1.8	0.55	0.9	0.27	1.7	0.52	1.1	0.34	1.4	0.43
22	1.0	0.30	2.0	0.61	1.0	0.30	2.0	0.61	1.3	0.40	1.5	0.46
23	1.2	0.37	2.2	0.67	1.1	0.34	2.4	0.67	1.5	0.46	1.7	0.52

Table 5 - PREDICTED POWERING PERFORMANCE FOR WITHOUT FINS (Exp. 2)

Displacement	**26,390 tons**	**26 810 tonnes**
Wetted Surface	**62,187 ft^2**	**5777 m^2**
Trim	**1.0 ft x bow**	**0.31 m**

ITTC Friction Line
C_A = 0.0005

SHIP SPEED (KNOTS)	(M/SEC)	EFFECTIVE POWER(PE) (HORSE-POWER)	(KILO-WATTS)	DELIVERED POWER(PD) (HORSE-POWER)	(KILO-WATTS)	PROPELLER REVOLUTIONS PER MINUTE
12.0	6.17	2380.	1780.	3000.	2240.	51.7
13.0	6.69	3010.	2250.	3800.	2840.	56.0
14.0	7.20	3720.	2780.	4710.	3520.	60.2
15.0	7.72	4550.	3390.	5770.	4310.	64.4
16.0	8.23	5490.	4090.	6980.	5200.	68.6
17.0	8.75	6550.	4880.	8370.	6240.	72.9
18.0	9.26	7750.	5780.	9960.	7430.	77.2
19.0	9.77	9130.	6810.	11840.	8830.	81.6
20.0	10.29	11100.	8280.	14570.	10860.	87.0
21.0	10.80	14370.	10720.	19160.	14290.	94.4
22.0	11.32	18860.	14060.	25690.	19160.	103.0
23.0	11.83	24450.	18230.	34290.	25570.	112.1

SHIP SPEED (KNOTS)	EFFICIENCIES(ETA) ETAD	ETAO	ETAH	ETAR	THRUST DEDUCTION AND WAKE FACTORS 1-THDF	1-WFTT	1-WFTQ	ADVANCE COEF. ADVC
12.0	0.795	0.665	1.130	1.055	0.905	0.800	0.840	0.895
13.0	0.790	0.670	1.125	1.055	0.900	0.800	0.835	0.895
14.0	0.790	0.670	1.125	1.050	0.900	0.800	0.835	0.900
15.0	0.790	0.670	1.120	1.050	0.895	0.800	0.835	0.900
16.0	0.785	0.670	1.115	1.055	0.895	0.800	0.835	0.900
17.0	0.780	0.670	1.115	1.050	0.890	0.800	0.835	0.900
18.0	0.780	0.670	1.110	1.050	0.890	0.800	0.830	0.900
19.0	0.770	0.670	1.105	1.045	0.885	0.800	0.830	0.900
20.0	0.760	0.665	1.100	1.040	0.880	0.800	0.830	0.885
21.0	0.750	0.655	1.100	1.045	0.880	0.800	0.835	0.860
22.0	0.735	0.640	1.095	1.045	0.875	0.800	0.845	0.835
23.0	0.715	0.625	1.090	1.045	0.870	0.800	0.845	[illegible]

Table 6 - PREDICTED POWERING PERFORMANCE FOR FINS 1(NAVY) (Exp. 8)

Displacement	**26,390 tons**	**26 810 tonnes**
Wetted Surface	**63,573 ft^2**	**5906 m^2**
Trim	**1.0 ft x bow**	**0.31 m**

ITTC Friction Line
C_A = 0.0005

SHIP SPEED (KNOTS)	SHIP SPEED (M/SEC)	EFFECTIVE POWER(PE) (HORSE-POWER)	EFFECTIVE POWER(PE) (KILO-WATTS)	DELIVERED POWER(PD) (HORSE-POWER)	DELIVERED POWER(PD) (KILO-WATTS)	PROPELLER REVOLUTIONS PER MINUTE
12.0	6.17	2480.	1850.	3010.	2240.	52.3
13.0	6.69	3150.	2350.	3830.	2860.	56.1
14.0	7.20	3920.	2930.	4790.	3570.	61.0
15.0	7.72	4820.	3600.	5900.	4400.	65.3
16.0	8.23	5860.	4370.	7210.	5370.	69.5
17.0	8.75	7030.	5240.	8690.	6480.	74.0
18.0	9.26	8350.	6230.	10420.	7770.	78.6
19.0	9.77	9860.	7350.	12450.	9280.	83.3
20.0	10.29	12000.	8950.	15390.	11470.	89.1
21.0	10.80	15260.	11380.	20080.	14970.	96.5
22.0	11.32	19960.	14880.	27450.	20470.	105.6
23.0	11.83	26410.	19700.	36790.	27430.	114.9

SHIP SPEED (KNOTS)	EFFICIENCIES(ETA) ETAD	ETAO	ETAH	ETAR	THRUST DEDUCTION AND WAKE FACTORS 1-THDF	1-WFTT	1-WFTQ	ADVANCE COEF. ADVC
12.0	0.825	0.665	1.130	1.095	0.905	0.800	0.865	0.835
13.0	0.820	0.665	1.125	1.100	0.900	0.800	0.865	0.835
14.0	0.820	0.665	1.125	1.095	0.905	0.800	0.865	0.835
15.0	0.820	0.665	1.130	1.085	0.910	0.800	0.860	0.840
16.0	0.815	0.665	1.140	1.075	0.915	0.800	0.850	0.850
17.0	0.810	0.665	1.135	1.075	0.910	0.805	0.850	0.850
18.0	0.800	0.665	1.120	1.075	0.900	0.805	0.855	0.885
19.0	0.790	0.665	1.110	1.075	0.890	0.805	0.855	0.835
20.0	0.780	0.660	1.095	1.080	0.880	0.805	0.860	0.870
21.0	0.760	0.650	1.085	1.080	0.875	0.805	0.870	0.815
22.0	0.725	0.635	1.070	1.070	0.860	0.805	0.875	0.810
23.0	0.720	0.620	1.090	1.060	0.880	0.815	0.875	0.780

Table 7 - PREDICTED POWERING PERFORMANCE FOR FINS 3(NAVY) (Exp. 10)

Displacement	**26,390 tons**	**26 810 tonnes**
Wetted Surface	**63,382 ft^2**	**5888 m^2**
Trim	**1.0 ft x bow**	**0.31 m**

ITTC Friction Line
C_A = 0.0005

SHIP SPEED (KNOTS)	SHIP SPEED (M/SEC)	EFFECTIVE POWER(PE) (HORSE-POWER)	EFFECTIVE POWER(PE) (KILO-WATTS)	DELIVERED POWER(PD) (HORSE-POWER)	DELIVERED POWER(PD) (KILO-WATTS)	PROPELLER REVOLUTIONS PER MINUTE
12.0	6.17	2610.	1950.	3110.	2330.	51.9
13.0	6.69	3330.	2480.	3960.	2950.	56.4
14.0	7.20	4170.	3110.	4970.	3710.	60.8
15.0	7.72	5140.	3840.	6150.	4580.	65.2
16.0	8.23	6270.	4680.	7550.	5630.	69.8
17.0	8.75	7550.	5630.	9170.	6830.	74.2
18.0	9.26	9000.	6710.	11020.	8220.	78.8
19.0	9.77	10660.	7950.	13270.	9900.	83.5
20.0	10.29	12980.	9680.	16440.	12250.	89.4
21.0	10.80	16420.	12250.	21270.	15860.	97.1
22.0	11.32	21310.	15890.	28570.	21300.	106.1
23.0	11.83	27960.	20850.	37880.	28250.	115.2

SHIP SPEED (KNOTS)	EFFICIENCIES(ETA) ETAD	ETAO	ETAH	ETAR	THRUST DEDUCTION AND WAKE FACTORS 1-THDF	1-WFTT	1-WFTQ	ADVANCE COEF. ADVC
12.0	0.840	0.660	1.210	1.045	0.955	0.790	0.825	0.800
13.0	0.840	0.660	1.205	1.050	0.955	0.790	0.830	[illegible]
14.0	0.840	0.660	1.205	1.055	0.950	0.790	0.830	[illegible]
15.0	0.835	0.660	1.200	1.055	0.950	0.790	0.830	[illegible]
16.0	0.830	0.660	1.195	1.055	0.945	0.790	0.830	[illegible]
17.0	0.825	0.660	1.195	1.045	0.945	0.790	0.825	[illegible]
18.0	0.815	0.660	1.185	1.045	0.940	0.790	0.825	[illegible]
19.0	0.805	0.655	1.175	1.040	0.930	0.790	0.820	[illegible]
20.0	0.790	0.650	1.160	1.045	[illegible]	0.790	[illegible]	[illegible]
21.0	0.770	0.640	1.135	1.060	[illegible]	0.790	[illegible]	[illegible]
22.0	0.745	0.625	1.120	1.065	[illegible]	0.790	[illegible]	[illegible]
23.0	0.740	0.610	1.140	1.055	0.900	0.790	[illegible]	[illegible]

Table 8 - PREDICTED POWERING PERFORMANCE FOR FINS 4(SSPA) (Exp. 14)

Displacement	**26,390 tons**	**26 810 tonnes**
Wetted Surface	**63,204 ft^2**	**5872 m^2**
Trim	**1.0 ft x bow**	**0.31 m**

ITTC Friction Line
C_A = 0.0005

SHIP SPEED (KNOTS)	SHIP SPEED (M/SEC)	EFFECTIVE POWER(PE) (HORSE-POWER)	EFFECTIVE POWER(PE) (KILO-WATTS)	DELIVERED POWER(PD) (HORSE-POWER)	DELIVERED POWER(PD) (KILO-WATTS)	PROPELLER REVOLUTIONS PER MINUTE
12.0	6.17	2450.	1830.	3100.	2320.	52.4
13.0	6.69	3090.	2300.	3950.	2940.	56.8
14.0	7.20	3830.	2850.	4910.	3660.	61.1
15.0	7.72	4670.	3490.	6030.	4500.	65.5
16.0	8.23	5630.	4200.	7330.	5460.	69.8
17.0	8.75	6700.	5000.	8820.	6570.	74.1
18.0	9.26	7910.	5980.	10510.	7840.	78.5
19.0	9.77	9360.	6990.	12610.	9410.	83.2
20.0	10.29	11320.	8440.	15510.	11570.	88.6
21.0	10.80	14300.	10600.	19970.	14890.	95.5
22.0	11.32	18930.	14120.	27050.	20170.	104.4
23.0	11.83	25210.	18800.	36430.	27160.	114.3

SHIP SPEED (KNOTS)	EFFICIENCIES(ETA) ETAD	ETAO	ETAH	ETAR	THRUST DEDUCTION AND WAKE FACTORS 1-THDF	1-WFTT	1-WFTQ	ADVANCE COEF. ADVC
12.0	0.790	0.665	1.110	1.065	0.895	0.805	0.850	[illegible]
13.0	0.785	0.665	1.105	1.065	0.895	0.810	0.855	[illegible]
14.0	0.780	0.670	1.100	1.060	0.890	0.810	0.850	[illegible]
15.0	0.775	0.670	1.095	1.060	0.890	0.815	0.850	[illegible]
16.0	0.770	0.670	1.090	1.055	0.890	0.815	0.850	[illegible]
17.0	0.760	0.670	1.085	1.045	0.890	0.820	0.850	[illegible]
18.0	0.755	0.670	1.080	1.040	0.885	0.820	0.845	[illegible]
19.0	0.740	0.670	1.075	1.030	0.885	0.820	0.845	[illegible]
20.0	0.730	0.670	1.070	1.020	0.880	0.825	0.840	[illegible]
21.0	0.715	0.660	1.065	1.015	0.880	0.830	0.840	[illegible]
22.0	0.700	0.650	1.060	1.020	0.880	0.830	0.845	[illegible]
23.0	0.690	0.635	1.065	1.025	0.885	0.830	0.860	[illegible]

Table 9 - PREDICTED POWERING PERFORMANCE FOR FINS 4(SSPA) (Exp. 14)
WITH ZERO TRUE WIND CORRECTION

Displacement	**26,390 tons**	**26 810 tonnes**
Wetted Surface	**63,204 ft^2**	**5872 m^2**
Trim	**1.0 ft x bow**	**0.31 m**

ITTC Friction Line
C_A = 0.0005

SHIP SPEED (KNOTS)	SHIP SPEED (M/SEC)	EFFECTIVE POWER(PE) (HORSE-POWER)	EFFECTIVE POWER(PE) (KILO-WATTS)	DELIVERED POWER(PD) (HORSE-POWER)	DELIVERED POWER(PD) (KILO-WATTS)	PROPELLER REVOLUTIONS PER MINUTE
12.0	6.17	2530.	1890.	[illegible]	2390	52.9
13.0	6.69	3100.	2380.	4070.	3040.	57.3
14.0	7.20	[illegible]	2950.	5070.	[illegible]	[illegible]
15.0	7.72	[illegible]	3600.	[illegible]	[illegible]	[illegible]
16.0	8.23	[illegible]	4330.	7570.	5640.	[illegible]
17.0	8.75	[illegible]	5160.	9110.	6790.	[illegible]
18.0	9.26	8100.	6100.	10630.	8100.	[illegible]
19.0	9.77	9670.	7210.	13020.	9720.	[illegible]
20.0	10.29	11690.	8710.	16010.	11940.	[illegible]
21.0	10.80	14720.	10970.	20650.	15320.	[illegible]
22.0	11.32	19410.	14420.	27730.	20600.	[illegible]
23.0	11.83	25760.	19210.	[illegible]	[illegible]	[illegible]

SHIP SPEED (KNOTS)	EFFICIENCIES(ETA) ETAD	ETAO	ETAH	ETAR	THRUST DEDUCTION AND WAKE FACTORS 1-T/AF	1-WFTT	1-WFTQ	ADVANCE COEF. J/D
12.0	0.790	0.660	1.110	1.070	[illegible]	0.805	0.855	[illegible]
13.0	0.785	0.663	1.105	1.070	0.890	0.810	0.855	[illegible]
14.0	0.780	0.665	1.100	1.065	0.890	0.810	0.860	[illegible]
15.0	0.775	0.665	1.095	1.060	0.890	0.815	0.855	[illegible]
16.0	0.770	0.665	1.090	1.055	0.890	0.815	[illegible]	[illegible]
17.0	0.760	0.670	1.085	1.060	[illegible]	[illegible]	[illegible]	[illegible]
18.0	0.755	0.670	1.080	[illegible]	[illegible]	0.820	0.850	[illegible]
19.0	0.740	0.670	1.075	1.055	[illegible]	0.820	0.845	0.805
20.0	0.730	0.665	1.070	1.025	0.900	0.825	0.845	[illegible]
21.0	0.715	0.650	1.065	1.020	[illegible]	0.830	0.845	0.870
22.0	0.700	0.645	1.060	1.000	0.880	0.830	0.850	[illegible]
23.0	0.690	0.630	1.055	1.030	0.885	0.830	0.865	[illegible]

Table 10 - PREDICTED POWERING PERFORMANCE FOR WITHOUT FINS (Exp. 4)

Displacement	**17,270 tons**	**17 550 tonnes**
Wetted Surface	**49,955 ft^2**	**4641 m^2**
Trim	**3.75 ft x stern**	**1.14 m**

ITTC Friction Line
C_A = 0.0005

SHIP SPEED (KNOTS)	SHIP SPEED (M/SEC)	EFFECTIVE POWER (HORSE-POWER)	EFFECTIVE POWER (KILO-WATTS)	DELIVERED POWER (HORSE-POWER)	DELIVERED POWER (KILO-WATTS)	PROPELLER REVOLUTIONS PER MINUTE
12.0	6.17	2940.	2200.	4110.	3060.	53.2
13.0	6.69	3780.	2820.	5100.	3860.	58.0
14.0	7.20	4740.	3530.	6380.	4760.	62.8
15.0	7.72	5740.	4280.	7660.	5720.	67.3
16.0	8.23	6640.	4950.	8850.	6600.	71.8
17.0	8.75	7560.	5630.	10060.	7500.	74.5
18.0	9.26	8530.	6360.	11370.	8480.	78.2
19.0	9.77	9580.	7150.	12790.	9540.	81.7
20.0	10.29	10890.	8120.	14680.	10940.	85.0
21.0	10.80	12690.	9460.	17240.	12850.	90.6
22.0	11.32	14950.	11150.	20590.	15350.	95.0
23.0	11.83	17680.	13180.	24690.	18410.	101.0

SHIP SPEED (KNOTS)	EFFICIENCIES (ETA) ETAD	ETAO	ETAH	ETAR	THRUST DEDUCTION AND WAKE FACTORS 1-THDF	1-WFTT	1-WFTQ	ADVANCE COEF. ADVC
12.0	0.715	0.625	1.230	0.935	0.890	0.725	0.645	0.730
13.0	0.730	0.625	1.215	0.965	0.885	0.730	0.690	0.780
14.0	0.740	0.625	1.200	0.990	0.880	0.735	0.720	0.790
15.0	0.750	0.630	1.185	1.005	0.875	0.740	0.745	0.795
16.0	0.750	0.635	1.170	1.010	0.870	0.745	0.755	0.810
17.0	0.750	0.640	1.155	1.015	0.865	0.750	0.765	0.825
18.0	0.750	0.645	1.135	1.020	0.860	0.755	0.775	0.840
19.0	0.750	0.655	1.125	1.020	0.860	0.760	0.775	0.855
20.0	0.740	0.655	1.110	1.020	0.850	0.765	0.780	0.865
21.0	0.735	0.655	1.100	1.020	0.850	0.770	0.790	0.865
22.0	0.725	0.655	1.085	1.025	0.845	0.780	0.795	0.860
23.0	0.715	0.650	1.075	1.025	0.840	0.780	0.800	0.850

Table 11 - PREDICTED POWERING PERFORMANCE FOR FINS 1(NAVY) (Exp. 6)

Displacement	17,270 tons	17 550 tonnes
Wetted Surface	50,231 ft^2	4667 m^2
Trim	3.75 ft x stern	1.14 m

I ITTC Friction Line
C_A = 0.0005

SHIP SPEED (KNOTS)	SHIP SPEED (M/SEC)	EFFECTIVE POWER(PE) (HORSE-POWER)	EFFECTIVE POWER(PE) (KILO-WATTS)	DELIVERED POWER(PD) (HORSE-POWER)	DELIVERED POWER(PD) (KILO-WATTS)	PROPELLER REVOLUTIONS PER MINUTE
12.0	6.17	2990.	2230.	4050.	3020.	54.0
13.0	6.69	3840.	2870.	5180.	3860.	58.8
14.0	7.20	4810.	3590.	6440.	4810.	63.6
15.0	7.72	5790.	4320.	7740.	5770.	67.8
16.0	8.23	6650.	4950.	8850.	6600.	71.3
17.0	8.75	7520.	5600.	9990.	7450.	74.9
18.0	9.26	8440.	6290.	11210.	8360.	78.6
19.0	9.77	9440.	7040.	12560.	9360.	82.9
20.0	10.29	10650.	7940.	14200.	10590.	85.4
21.0	10.80	12310.	9180.	16510.	12310.	90.5
22.0	11.32	14410.	10740.	19560.	14540.	95.6
23.0	11.83	16930.	12620.	23220.	17320.	101.2

SHIP SPEED (KNOTS)	EFFICIENCIES(ETA) ETAD	ETAO	ETAH	ETAR	THRUST DEDUCTION AND WAKE FACTORS 1-THDF	1-WFTT	1-WFTQ	ADVANCE COEF. ADVC
12.0	0.740	0.635	1.200	0.965	0.910	0.760	0.735	0.815
13.0	0.740	0.635	1.190	0.990	0.910	0.760	0.740	0.810
14.0	0.745	0.635	1.180	0.995	0.905	0.765	0.760	0.815
15.0	0.750	0.640	1.170	1.000	0.900	0.770	0.770	0.820
16.0	0.750	0.645	1.165	1.030	0.900	0.770	0.770	0.835
17.0	0.750	0.650	1.145	1.010	0.890	0.775	0.785	0.850
18.0	0.755	0.655	1.120	1.025	0.875	0.780	0.800	0.865
19.0	0.750	0.660	1.110	1.025	0.870	0.785	0.805	0.875
20.0	0.750	0.665	1.095	1.030	0.860	0.795	0.810	0.885
21.0	0.745	0.665	1.085	1.035	0.855	0.790	0.815	0.875
22.0	0.740	0.660	1.070	1.040	0.850	0.790	0.825	0.880
23.0	0.730	0.660	1.060	1.045	0.840	0.795	0.830	0.875

Table 12 - PREDICTED POWERING PERFORMANCE FOR FINS 4(SSPA) (Exp. 16)

Displacement	17,270 tons	17 550 tonnes
Wetted Surface	50,896 ft^2	4728 m^2
Trim	3.75 ft x stern	1.14 m

ITTC Friction Line
C_A = 0.0005

SHIP SPEED (KNOTS)	SHIP SPEED (M/SEC)	EFFECTIVE POWER(PE) (HORSE-POWER)	EFFECTIVE POWER(PE) (KILO-WATTS)	DELIVERED POWER(PD) (HORSE-POWER)	DELIVERED POWER(PD) (KILO-WATTS)	PROPELLER REVOLUTIONS PER MINUTE
12.0	6.17	3840.	2260.	3750.	2800.	54.4
13.0	6.69	3880.	2890.	4990.	3720.	59.5
14.0	7.20	4830.	3600.	6340.	4730.	64.4
15.0	7.72	5850.	4370.	7650.	5710.	68.7
16.0	8.23	6850.	5110.	8730.	6510.	72.2
17.0	8.75	7830.	5840.	9860.	7370.	75.8
18.0	9.26	8780.	6540.	11110.	8280.	79.5
19.0	9.77	9840.	7340.	12550.	9360.	83.1
20.0	10.29	11100.	8270.	14280.	10650.	87.0
21.0	10.80	12880.	9600.	16730.	12470.	91.6
22.0	11.32	15100.	11260.	19780.	14750.	96.8
23.0	11.83	17760.	13250.	23490.	17520.	102.4

SHIP SPEED (KNOTS)	EFFICIENCIES(ETA) ETAD	ETAO	ETAH	ETAR	THRUST DEDUCTION AND WAKE FACTORS 1-THDF	1-WFTT	1-WFTQ	ADVANCE COEF. ADVC
12.0	0.810	0.635	1.190	1.070	0.910	0.765	0.825	0.815
13.0	0.780	0.635	1.165	1.055	0.895	0.770	0.815	0.810
14.0	0.760	0.635	1.140	1.050	0.880	0.770	0.820	0.810
15.0	0.765	0.640	1.140	1.055	0.885	0.775	0.825	0.820
16.0	0.785	0.645	1.155	1.055	0.900	0.780	0.825	0.835
17.0	0.790	0.650	1.150	1.060	0.900	0.785	0.830	0.845
18.0	0.790	0.655	1.125	1.075	0.885	0.785	0.845	0.860
19.0	0.785	0.660	1.110	1.075	0.875	0.790	0.845	0.870
20.0	0.775	0.660	1.095	1.070	0.870	0.795	0.845	0.880
21.0	0.770	0.660	1.090	1.070	0.865	0.795	0.845	0.880
22.0	0.765	0.660	1.075	1.075	0.860	0.800	0.850	0.875
23.0	0.755	0.660	1.065	1.080	0.855	0.800	0.860	0.870

APPENDIX A

Open Water Characteristics

and

Model Propeller Information

for

Propeller 4677

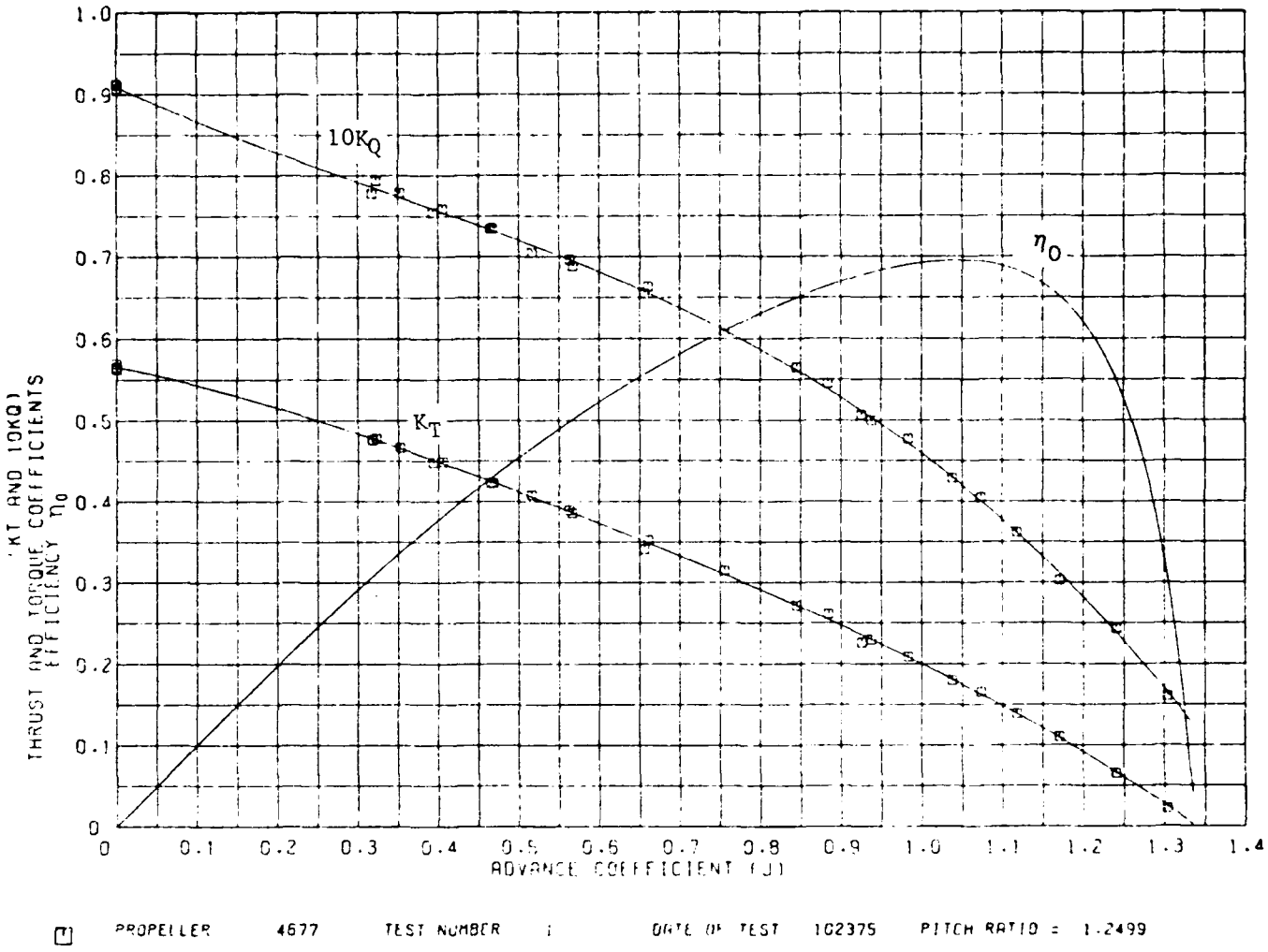

Figure A1 Open Water Characteristics of Propeller 4677

PROPELLER 4677

Number of Blades	7	Diameter	9.812 in (249.22 mm)
Exp. Area Ratio	0.771	Pitch at 0.7 R	12.265 in (3056.74 mm)
MWR	0.216	Rotation	R.H.
BTF	0.062	Designed by	DTNSRDC
P/D at 0.7 R	1.250	Reference	P-4677

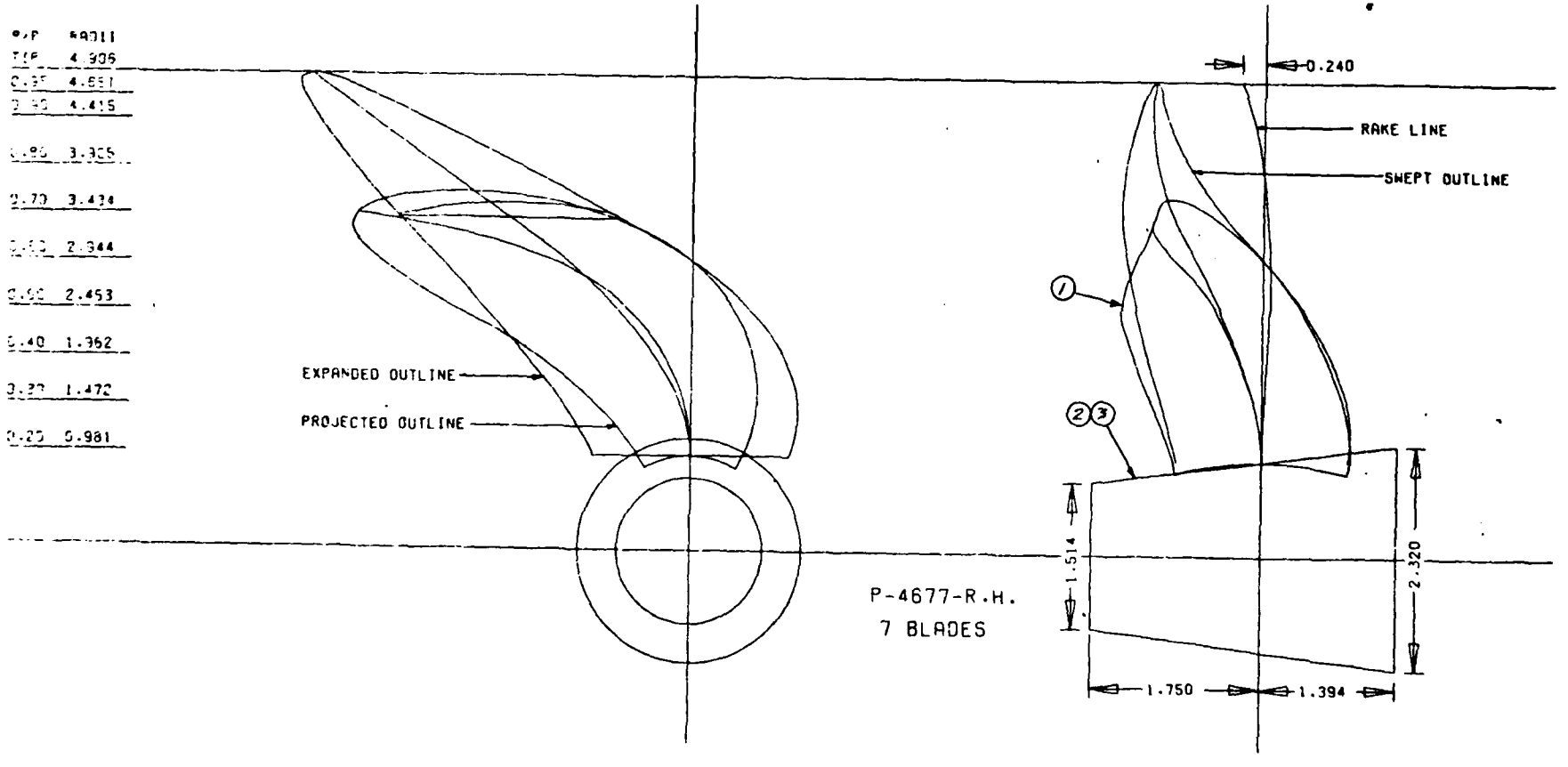

Figure A2 Drawing of Propeller 4677

TABLE A1

FAIRED OPEN WATER COEFFICIENTS FOR PROPELLER 4677

EXPERIMENT NO. 1 OCT. 1975

J	KT	10KQ	η_o
0.000	.565	.909	0.000
.050	.555	.887	.050
.100	.543	.866	.100
.150	.530	.847	.149
.200	.515	.828	.198
.250	.500	.810	.246
.300	.483	.792	.291
.350	.466	.774	.335
.400	.448	.757	.377
.450	.430	.739	.417
.500	.412	.720	.455
.550	.392	.701	.490
.600	.373	.681	.523
.650	.353	.660	.553
.700	.333	.637	.582
.750	.312	.613	.607
.800	.291	.587	.631
.850	.269	.559	.652
.900	.247	.528	.669
.950	.224	.495	.683
1.000	.200	.459	.692
1.050	.175	.420	.695
1.100	.148	.378	.688
1.150	.121	.332	.667
1.200	.092	.282	.620
1.250	.060	.228	.527
1.300	.027	.170	.331
1.339	0.000	.121	0.000

DTNSRDC ISSUES THREE TYPES OF REPORTS

1. DTNSRDC REPORTS, A FORMAL SERIES, CONTAIN INFORMATION OF PERMANENT TECHNICAL VALUE. THEY CARRY A CONSECUTIVE NUMERICAL IDENTIFICATION REGARDLESS OF THEIR CLASSIFICATION OR THE ORIGINATING DEPARTMENT.

2. DEPARTMENTAL REPORTS, A SEMIFORMAL SERIES, CONTAIN INFORMATION OF A PRELIMINARY, TEMPORARY, OR PROPRIETARY NATURE OR OF LIMITED INTEREST OR SIGNIFICANCE. THEY CARRY A DEPARTMENTAL ALPHANUMERICAL IDENTIFICATION.

3. TECHNICAL MEMORANDA, AN INFORMAL SERIES, CONTAIN TECHNICAL DOCUMENTATION OF LIMITED USE AND INTEREST. THEY ARE PRIMARILY WORKING PAPERS INTENDED FOR INTERNAL USE. THEY CARRY AN IDENTIFYING NUMBER WHICH INDICATES THEIR TYPE AND THE NUMERICAL CODE OF THE ORIGINATING DEPARTMENT. ANY DISTRIBUTION OUTSIDE DTNSRDC MUST BE APPROVED BY THE HEAD OF THE ORIGINATING DEPARTMENT ON A CASE-BY-CASE BASIS.

F

8