AD-A099 894 VOUGHT CORP DALLAS TX F/G 10/2
POWER SYSTEM CONTROL STUDY. PHASE I. INTEGRATED CONTROL TECHNIQ--ETC(U)
MAR 81 D E LAUTNER, A J MAREK, J R PERKINS F33615-78-C-2018
UNCLASSIFIED AFWAL-TR-80-2129 NL

1 OF 5
AD
A099894

AFWAL-TR-80-2129

LEVEL II

AD A099894

POWER SYSTEM CONTROL STUDY
PHASE I – INTEGRATED CONTROL TECHNIQUES
PHASE II – SYSTEM MODELING

VOUGHT CORPORATION
AN LTV COMPANY
DALLAS, TEXAS

MARCH 1981

TECHNICAL REPORT AFWAL-TR-80-2129
FINAL REPORT FOR PERIOD 15 JUNE 1978 - 15 SEPTEMBER 1980

Approved for public release;distribution unlimited

AERO-PROPULSION LABORATORY

AIR FORCE WRIGHT AERONAUTICAL LABORATORIES
AIR FORCE SYSTEMS COMMAND
WRIGHT-PATTERSON AIR FORCE BASE, OHIO 45433

NOTICE

When Government drawings, specifications, or other data are used for any purpose other than in connection with a definitely related Government procurement operation, the United States Government thereby incurs no responsibility nor any obligation whatsoever; and the fact that the government may have formulated, furnished, or in any way supplied the said drawings, specifications, or other data, is not to be regarded by implication or otherwise as in any manner licensing the holder or any other person or corporation, or conveying any rights or permission to manufacture use, or sell any patented invention that may in any way be related thereto.

This report has been reviewed by the Office of Public Affairs (ASD/PA) and is releasable to the National Technical Information Service (NTIS). At NTIS, it will be available to the general public, including foreign nations.

This technical report has been reviewed and is approved for publication.

DUANE G. FOX
Project Engineer
Power Systems Branch
Aerospace Power Division

PAUL R. BERTHEAUD
Technical Area Manager
Power Systems Branch
Aerospace Power Division

FOR THE COMMANDER

JAMES D. REAMS
Chief, Aerospace Power Division
Aero Propulsion Laboratory

"If your address has changed, if you wish to be removed from our mailing list, or if the addressee is no longer employed by your organization please notify AFWAL/POOS-2 *W-PAFB, OH 45433 to help us maintain a current mailing list".*

Copies of this report should not be returned unless return is required by security considerations, contractual obligations, or notice on a specific document.

AIR FORCE/56780/29 May 1981 — 150

SECURITY CLASSIFICATION OF THIS PAGE (When Data Entered)

REPORT DOCUMENTATION PAGE

READ INSTRUCTIONS BEFORE COMPLETING FORM

1. REPORT NUMBER: AFWAL-TR-80-2129

2. GOVT ACCESSION NO.: AD-A099 894

3. RECIPIENT'S CATALOG NUMBER:

4. TITLE (and Subtitle): POWER SYSTEM CONTROL STUDY. PHASE I: INTEGRATED CONTROL TECHNIQUES. PHASE II: DETAIL DESIGN AND SYSTEM MODELING.

5. TYPE OF REPORT & PERIOD COVERED: Final rept. 15 June 1978 to 15 Sept 1980

6. PERFORMING ORG. REPORT NUMBER:

7. AUTHOR(s): D.E. Lautner, D.F. Sellers, A.J. Marek, J.R. Perkins

8. CONTRACT OR GRANT NUMBER(s): F33615-78-C-2018

9. PERFORMING ORGANIZATION NAME AND ADDRESS: Vought Corporation, P.O. Box 225907, Dallas, Texas 75265

10. PROGRAM ELEMENT, PROJECT, TASK AREA & WORK UNIT NUMBERS: Project 3145, Task 314529, Work Unit 3145 2954

11. CONTROLLING OFFICE NAME AND ADDRESS: Aero Propulsion Laboratory (AFWAL/POOS), Wright Patterson Air Force Base, Ohio 45433

12. REPORT DATE: March 1981

13. NUMBER OF PAGES: 428

14. MONITORING AGENCY NAME & ADDRESS (if different from Controlling Office): Air Force Wright Aeronautical Laboratories (AFSC)

15. SECURITY CLASS. (of this report): Unclassified

15a. DECLASSIFICATION/DOWNGRADING SCHEDULE:

16. DISTRIBUTION STATEMENT (of this Report): Approved for Public Release; Distribution Unlimited

17. DISTRIBUTION STATEMENT (of the abstract entered in Block 20, if different from Report):

18. SUPPLEMENTARY NOTES:

19. KEY WORDS (Continue on reverse side if necessary and identify by block number):
Advanced Aircraft Electrical Systems (AAES)
Trade Studies
Integrated Control
EMUX Power Distribution
Computer Modeling

20. ABSTRACT (Continue on reverse side if necessary and identify by block number):

This report documents the Phase I and Phase II results of a two phase study program which addresses the integration of advanced power system control technologies into a reliable and fault tolerant system. The advanced control technologies integrated include electric engine start, automatic load management, microprocessor control implementations, design techniques for providing "no-gap" power and an all "solid state" electric power distribution system. Electric system performance requirements are established and preliminary

DD FORM 1 JAN 73 1473 EDITION OF 1 NOV 65 IS OBSOLETE

S/N 0102-LF-014-6601

92990

SECURITY CLASSIFICATION OF THIS PAGE (When Data Entered)

designs of an integrated "baseline" control system for single and multiengine aircraft for the 1990 operational time period are presented. Finally, a detail design was performed for a single and a multiple engine electric system. Analytical models and computer programs were developed for the IDG and VSCF implemented electrical systems. A users guide for each of the programs was prepared. Simulation runs of typical electrical system operations were made on the computer graphics system and included in the final engineering report.

FOREWORD

This technical report describes the effort conducted by Vought Corporation, Electronics Design Group, Dallas, Texas, under Contract F33615-78-C-2018. The effort was sponsored by Duane Fox (AFWAL/POOS) of the Air Force Aero Propulsion Laboratory, Air Force Wright Aeronautical Laboratories, Wright-Patterson Air Force Base, Ohio.

The work reported herein was performed during the period 15 June 1978 to 15 September 1980 under the technical direction of J.R. Perkins (Vought Corporation), Project Engineer. The report was prepared by A.J. Marek, D.E. Lautner, and D.F. Sellers; and submitted in March 1981.

Sundstrand, General Electric and Westinghouse were retained under subcontract to provide pertinent data, information and consultations on the program primarily in the areas of power generation and control, and system computer modeling.

This report covers Phase I and Phase II of a planned two phase program concerning power system control technology. Phase I scope was directed toward evolving power system configurations for single and multi-engine aircraft for the 1980 to 1990 time period. Phase II addresses developing detail designs, preparing analytical models and performing stability analysis on the single and multi-engine electrical systems.

TABLE OF CONTENTS

LIST OF ILLUSTRATIONS

LIST OF ILLUSTRATIONS
(Continued)

LIST OF ILLUSTRATIONS
(Continued

LIST OF ILLUSTPATIONS
(Continued)

LIST OF ILLUSTRATIONS
(Continued)

LIST OF ILLUSTRATIONS
(Continued)

LIST OF ILLUSTRATIONS
(Concluded)

LIST OF TABLES

LIST OF TABLES
(Continued)

LIST OF TABLES
(Continued)

LIST OF TABLES
(Continued)

LIST OF TABLES
(Concluded)

SECTION I

INTRODUCTION

1.1 BACKGROUND

As aircraft capabilities continue to expand and the cost of manned aircraft systems rapidly escalate, the electrical system is called upon to provide higher quality and more reliable power at lower cost. This has arisen because more flight critical equipments are implemented with electronic systems. In addition, the number of electrical/electronic systems and the total power requirements have increased. Additionally, the aircraft sophistication requires controls which tax the capabilities of crew members. To alleviate the crew workload problem, the trend has been toward automation of control functions. Consequently, the electrical system has become highly advanced and complex with the use of solid state switching components in conjunction with computer control technology. A computer controlled solid state distribution system known as EMUX (Electrical Multiplexing) has been developed and implemented on a large aircraft (B-1). This system does not, however, control the generators or main bus contactors. Integration of these control functions can become complex and the total system may have instabilities which could lead to failures and even total loss of electrical power if not applied correctly.

Solid state power controllers have been developed and this technology is now considered off-the-shelf. However, additional efforts[3] are being made to improve performance and to lower the life cycle cost of these components.

Advanced electrical power generator/starter systems have been developed. One starter/generator concept utilizes rare earth permanent magnet solid rotors along with solid state electronics to generate three-phase 400 Hz power and

provide engine start capability. Another concept known as Integrated Starter Drive (ISD) utilizes a modified CSD configuration to provide a hydrostatic drive capability.

Other advanced technologies include microprocessor implementation of generator control functions, automatic load management via EMUX, hybrid bus controllers and static inverters which enhance the capability for providing an uninterrupted power bus.

1.2 PROGRAM OBJECTIVES

The objective of this program was to evolve a reliable, fault tolerant electrical system through the integration of advanced generator control, regulation and protection functions; and through the application of advanced power distribution, bus control and protection techniques. More specifically, the objective was to evolve and apply technology for yielding a cost effective electrical generation and control system which will not sustain cascading type faults that might lead to complete loss of electrical power. This objective was to be accomplished with emphasis placed on utilizing advanced technologies such as the electrical multiplex system (EMUX) for control functions, the permanent magnet VSCF and advanced IDG starter/generators, microprocessor control of generator and buses, and solid state power control and protection components.

1.3 METHOD OF APPROACH

The study is divided into two phases. In general, during Phase I various integrated control techniques which have application in aircraft electrical power systems were studied, and an assessment of their stability and cost

effectiveness was made. Electrical control system performance requirements were established, design philosophies for the application of these systems in advanced technology aircraft were established, and a conceptual design of an integrated control system was made. During Phase II, this conceptual design was formulated for a single engine and multi-engine aircraft to add sufficient detail for systems performance analysis. Finally, a stability analysis was conducted on each of the two designs to verify their performance capability.

More specifically, the approach that was taken in each phase to meet the program objectives are as follows:

Phase I

- Conduct Technology Survey - This included a review of existing reports, specifications, etc., and to a greater extent a review of data furnished by manufacturers of advanced technology electric systems.
- Establish Electric System Requirements - Performance requirements were established for a single engine and a multi-engine aircraft. These requirements are based on known and projected missions for the 1990 operational time period.
- Conduct Trade Studies - Various trade studies were conducted. These include power generating concepts (VSCF, CFG, IDG, CSD), generator control concept (Microprocessor, EMUX), electric engine start concepts, EMUX processor redundancy requirements and power bus arrangements.
- Develop Conceptual Designs - A conceptual design was developed for a single engine and a multi-engine (4) electrical systems. The designs were based on results of the trade studies, data supplied by electric power system manufacturers and evaluated control concepts which were determined to be the best for meeting the established system requirements.

Phase II

- Perform Detail Design - The conceptual designs developed during Phase I were advanced in detail to include power distribution component characteristics and feeder sizes.
- Obtain Data for Analytical Modeling - Data required to perform system modeling and stability analysis was obtained from equipment manufacturers.
- Perform Computer Modeling and Stability Analysis - Computer programs were prepared for electrical system models encompassing the IDG and VSCF generating concepts. System stability of the two designs was analyzed for normal and abnormal operation.

SECTION II

SUMMARY

In this study, advanced system concepts were examined. Such concepts include the use of (1) solid state switching in areas of power generation and control, bus and load switching, and signal sensing; (2) engine electric start implementation; (3) smart terminal (microprocessor controllers) applications in the areas of the GCU, Universal Multiplex Terminal, and integrated load management center designs; (4) dynamic load management and generator control via the EMUX sensory and data processing capabilities, (5) distributed load management; (6) automated and continuous Built-In-Test; and (7) MIL-STD-1553 compatible multiplexing using TSP (Twisted-Shielded Pair) data busing techniques. In addition, fundamental electrical system considerations as governed by MIL-STD-704 and AFSC DH 2-3 were examined. Emphasis was placed on utilizing new technologies in deriving an advanced electrical system which provides improved performance and higher quality power primarily in the areas of reduced voltage transients and power interruptions, than is presently achievable in conventional systems as defined by MIL-STD-704.

Two power generating concepts (cycloconverter VSCF and IDG) were determined to be the best for the 1980-1990 time period electric systems. Electric engine start provides advantages over the more conventional self start concepts under certain conditions. The EMUX controlled power distribution system offers definite advantages over the conventionally implemented distribution system. Providing a true "gapless power" AC bus is not practical although the power interruption time can be significantly reduced over that allowed by MIL-STD-704. Solid state and hybrid bus controllers are practical for certain applications.

Computer programs were developed to model electrical systems applicable to single and multi-engine aircraft. The programs are structured in sufficient detail to allow simulation of various operating and fault conditions. The programs are written for a specified system rating (60 KVA), however, systems with other ratings can be modeled by simply ratioing the system constants up or down as needed. The models address the power generation and distribution systems including parallel operation.

In modeling the system, both functional block diagrams and analytical transfer functions are developed. Sample computer runs are included for various operating conditions and compared with hardware test results to verify the validity of the developed programs.

SECTION III

ELECTRIC SYSTEM REQUIREMENTS

This section establishes the electric system performance requirements for a single and a multi-engine electric system. The requirements establish a framework or baseline for subsequent analysis of control concepts and candidate systems. The rationale was to first establish system requirements and then update or modify the requirements for a specific mission. It is intended that this modification can be implemented without changing the basic power system control philosophy established for either the single engine or the multi-engine aircraft electric system.

3.1 SINGLE ENGINE AIRCRAFT

The single engine aircraft in the 1990 time frame is visualized as a multi-mission vehicle which can be reconfigured to meet a mission of reconnaissance, ground support, electronic-warfare, or fighter. The basic equipment complement includes data processors, navigation and flight controls (fly-by-wire), actuators, communication and weapon systems. The approximate power source requirement is 60 KVA. Performance requirements established for the electrical system are categorized as follows:

a. No single failure shall cause the loss of all electric power or be hazardous to flight safety.

b. The electric system shall provide sufficient power to permit safe recovery of the aircraft with the main power source inoperative.

c. The auxiliary power source shall operate independent of the engine.

d. Physical and electrical isolation shall be maintained between major power management centers.

e. No single feeder fault shall cause the complete loss of power to any power management/distribution center.

f. A "gapless" power bus with sufficient capacity to supply power to loads which are sensitive to power interruptions shall be provided (power interruptions, if present, shall not exceed 20 milliseconds).

g. The electric system shall provide sufficient continuous ground power independent of the engines to operate all maintenance and/or ground related loads.

h. An engine self-start capability shall be provided.

i. The electric system shall contain provisions for the automatic application and removal of loads in groups not exceeding 25 percent of main power source rating.

j. The predicted reliability of the electric power system in providing power to the bus and to <u>all</u> utilization equipment required for the safe return of the aircraft shall not be less than 0.9998 and 0.998 respectively.

k. The predicted reliability of the electric power system in providing power to the bus and to <u>all</u> utilization equipment required for completion of a specified mission shall not be less than 0.995 and 0.990 respectively.

3.2 MULTI-ENGINE AIRCRAFT

The multi-engine aircraft is a four-engine vehicle with a multi-mission capability for use in the 1990 time period. The basic equipment complement includes data processors, navigation and flight controls (fly-by-wire),

actuators, motors, communication equipment and weapon systems. The approximate power source requirement is 90 KVA. The performance requirements are categorized as follows:

a. No single failure shall cause the permanent loss of more than one generating channel nor prevent the aircraft from completing its mission.

b. Any combination of two failures shall not cause complete loss of power.

c. The electric system shall support safe recovery of the aircraft with all main generating channels inoperative. The auxiliary power source shall operate independent of the engines.

d. Physical and electrical isolation shall be maintained between major power management centers.

e. A single feeder fault shall not cause the loss of rated power to any power distribution center.

f. Any combination of two feeder faults shall not cause the loss of all power to any power distribution center.

g. The normal mode of operation shall be "synchronized and isolated". Parallel operation capability may be required for specific missions.

h. A "gapless" power bus with capacity sufficient to support continuously those loads which are sensitive to power interruptions shall be provided (power interruptions, if present, shall not exceed 20 milliseconds).

i. The electric system shall provide sufficient continuous ground power independent of the engines to operate all maintenance and/or ground related loads.

j. An engine self start capability shall be provided.

k. The electric system shall contain provisions for the application and removal of loads in groups not exceeding 25 percent of one generating channel rating.

l. The predicted reliability of the electric power system in providing power to the bus and to all utilization equipment required for the safe return of the aircraft shall not be less than 0.99995 and 0.991 respectively.

m. The predicted reliability of the electric power system in providing power to the bus and to all utilization equipment required for completion of a specified mission shall not be less than 0.9998 and 0.980 respectively.

SECTION IV

SYSTEM DESIGN

The following paragraphs define "baseline" electric system concepts for a single engine aircraft and a multi-engine aircraft. These concepts were established to meet the study objectives and proposed system requirements given in Sections I and III, and were derived from trade studies and data supplied by generator system manufacturers. This section also discusses a macro-design for each of the electrical system building blocks and presents component/subsystem details applicable to the computer modeling effort discussed in Section VI. It should be noted that the defined concepts may or may not apply for all aircraft weapon systems. Definition and evaluation of specific weapon system mission and performance requirements will dictate which of the electric system features are to be implemented.

4.1 SINGLE ENGINE AIRCRAFT

The electric system for a single engine aircraft is defined to consist of the following:

a. One main AC generating channel rated for 60 KVA with a microprocessor implemented GCU for improved logic control and self test capability.

b. Engine electric self start capability.

c. One APU rated for total essential AC load, maintenance AC load or engine start load, whichever is greater.

d. One static inverter rated for total "gapless power" load.

e. One battery rated to provide gapless power to all loads requiring no power interruption. The battery powers loads during the time after main generator shutdown and prior to APU start-up.

f. Five Load Management Centers (LMC's), each center supplied power with a main AC (30) feeder and an auxiliary AC (30) feeder.

g. Normal mode of operation of inverter is "standby" and synchronized to the main AC bus. Time required to switch to "standby" bus is 20 milliseconds maximum.

h. Solid state load controllers are used to control and protect load power circuits.

i. Control of power to individual loads is by EMUX. The EMUX system consists of the following:

   - Two Processors
   - Approximately 11 MUX/DEMUX (Universal) Terminals of 64 channel capacity each
   - One Maintenance Panel
   - One Control Panel
   - A Redundant Data Bus

j. System contains capability of sequentially removing individual loads in accordance with a preset priority for load management.

A block diagram of the single engine power control system is shown in Figure 1. The system consists essentially of a main and emergency power source interlocked through the bus management subsystem. A limited capacity battery powered inverter provides power during transition from the main to the auxiliary source. Additionally, an external power source provision (receptacle) is available for ground maintenance and engine starting power. The auxiliary generator is rated at the same capacity (60 KVA) as the main generator for two reasons: (1) To utilize common generator hardware and (2) to provide sufficient capacity for engine starting. Both the main and the auxiliary generator utilize dedicated generator control units with multiplex bus ports for communication with EMUX.

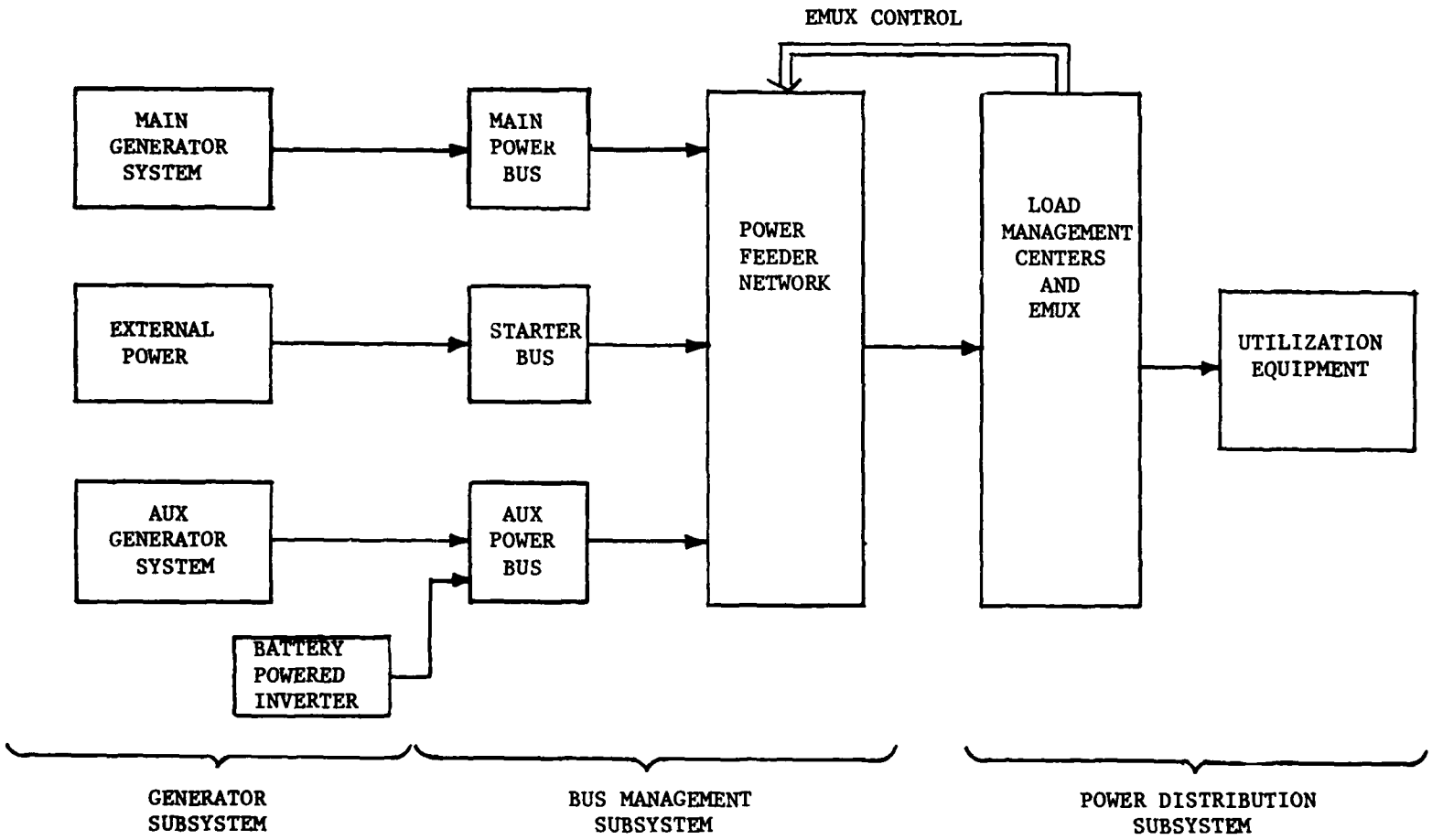

FIGURE 1

BLOCK DIAGRAM - SINGLE ENGINE AIRCRAFT ELECTRICAL SYSTEM

A power feeder network consisting of EMUX controlled Remote Control Circuit Breakers (RCCBs) and power wiring routes electrical power to six distributed LMC's through redundant paths. The EMUX link to the feeder RCCBS monitor the trip status at the circuit breaker and automatically resets the breaker (one reset attempt) after tripping.

Each of the six distributed LMC's contain one three phase power bus connected to two independent power sources. All load controllers within a LMC are connected to this one three phase power bus. EMUX then establishes the priority for powering the various aircraft utilization equipments. Load management trade-off for single vs. dual internal power buses is discussed in 4.1.4. In order to establish a worst-case stability condition, the total power demand of the utilization equipment was adjusted to equal the power source capacity (60 KVA) under steady conditions. Real world aircraft would not, however, fully load the generator.

Figure 2 is a functional schematic of the defined electrical system for a single engine aircraft. Figure 3 addresses in expanded block diagram form, the major construction elements of the single engine electrical power system computer model. Refer to Appendix A and section VI for additional details of the electrical power system modeling.

4.1.1 POWER GENERATION

The primary power system consists of an advanced technology generating system which employs either the IDG or VSCF (cycloconverter) concepts to provide high quality AC power. Table 1 and Figure 4 delineate the basic performance requirements for the generators. Generator control consists of an advanced

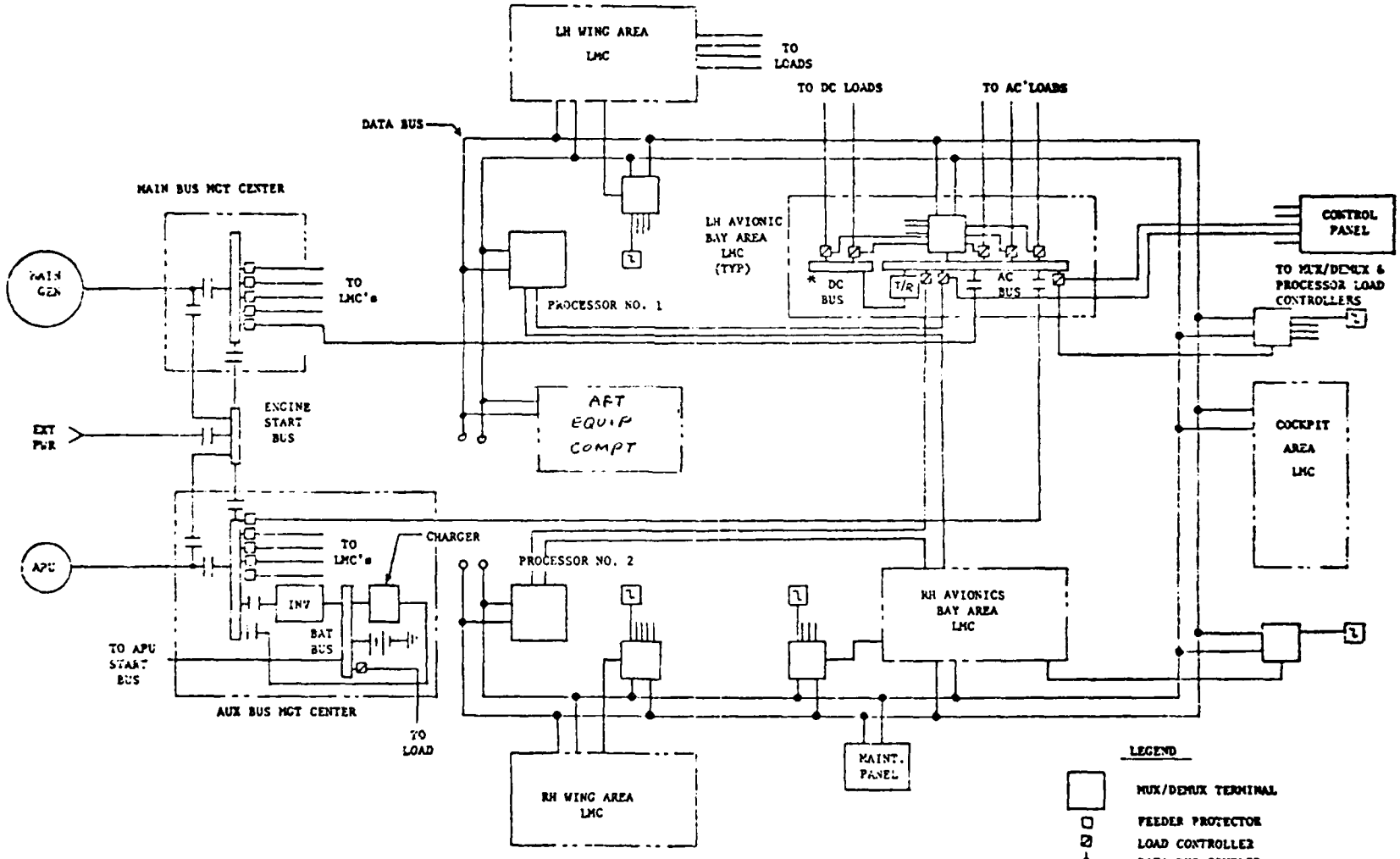

FIGURE 2 ADVANCED TECHNOLOGY ELECTRIC CONTROL SYSTEM - SINGLE ENGINE AIRCRAFT

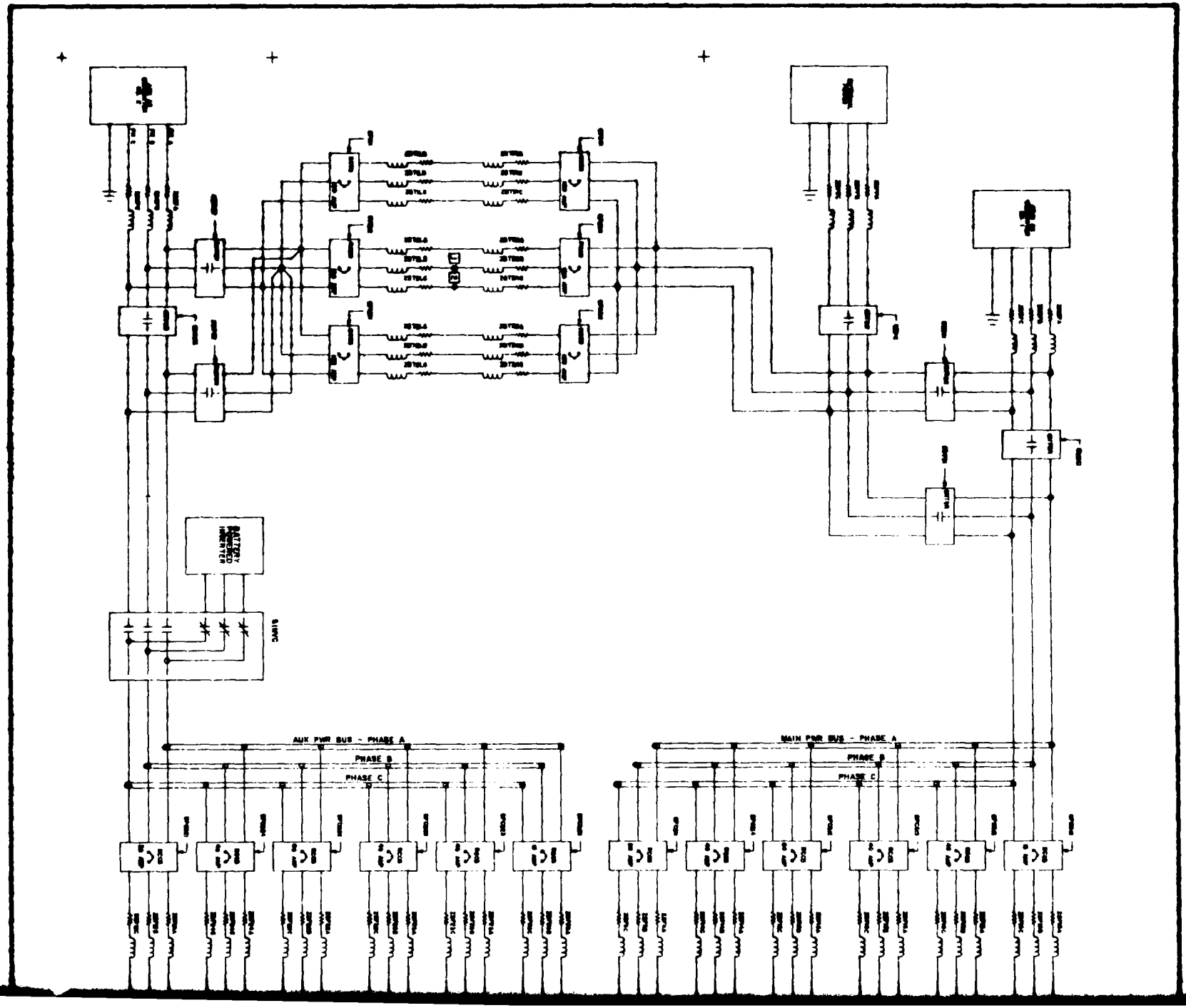
BATTERY
INVERTER
SWITCH
AUX PWR BUS - PHASE A
PHASE B
PHASE C
MAIN PWR BUS - PHASE A
PHASE B
PHASE C

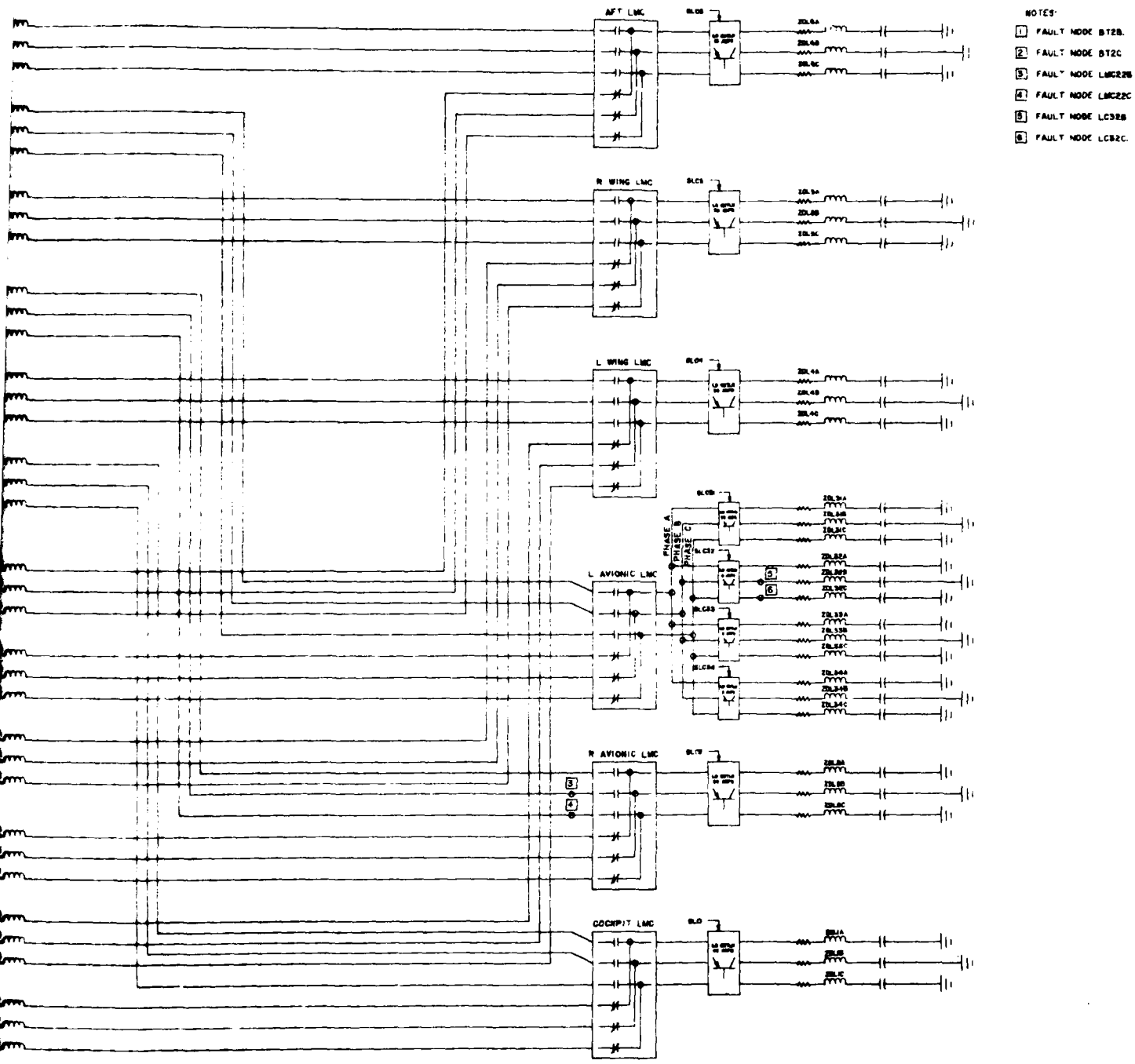

FIGURE 3 SINGLE ENGINE POWER CONTROL SYSTEM

TABLE 1

GENERATOR CHARACTERISTICS

Technology Type	IDG	VSCF
System Rating (KVA)	60	60
Voltage at Point of Regulation (VAC)	115/200	115/200
Rated Current - Continuous (Amps/Phase)	174	174
Overload Rating		
5 Minutes (Amps/Phase)	174	174
2 Minutes (Amps/Phase)	295	-
5 Seconds (Amps/Phase)	305	350
Short Circuit Current 5 Seconds (Amps/Phase)	305	350
Voltage Regulation - Line-to-Neutral (Volts)	115±1	115±1
Voltage Transient Limits	Figure 4	Figure 4
Voltage Waveform		
Crest Factor	1.41±.07	1.41±.07
Distortion (%)	2	4
DC Content (Volts)	0	.05
Frequency Regulation (%)	±1.0	±0.1
Frequency Transients (Hz)	±20	0
Phase Displacement - Balanced Loads	$120^{\circ}\pm3.5^{\circ}$	$120^{\circ}\pm2.5^{\circ}$
Speed Range (rpm)	12,000-24,000	22,000-27,000
System Weight (Lbs) (Cooling not included)	80	124
System Efficiency (%)		
24,000 rpm	78	80
18,000 rpm	81	81
12,000 rpm	80	82

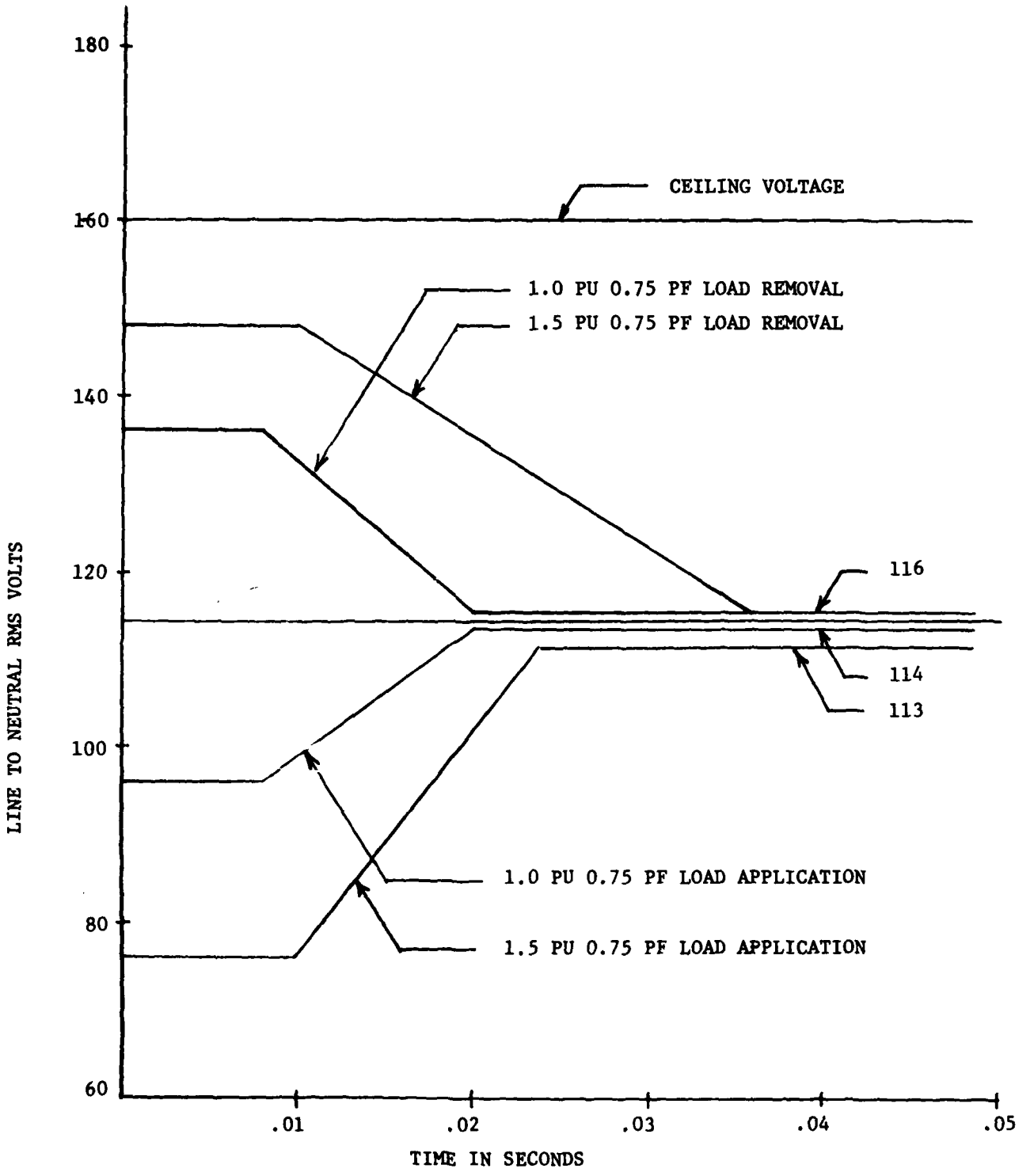

FIGURE 4 VOLTAGE TRANSIENT LIMITS

technology Generator Control Unit (GCU) which contains all the circuitry necessary to perform the voltage regulation, control, and protection functions of the generating system. In addition, Built-In-Test circuitry is included to aid in on-aircraft fault isolation. Identical GCU's are employed for the engine and APU driven systems. A microprocessor is used within the GCU to provide extensive BIT capability with minimal increase in hardware complexity. In this application area the software element is also minimal as (1) it will reside as firmware and (2) it should undergo very few revisions. The microprocessor implemented GCU interfaces with the EMUX system via the MIL-STD-1553 data bus. This EMUX interface allows corrective action to be taken by the automatic load shedding system when the GCU shows such action will prevent a system shutdown. No pilot action is required. The GCU also interfaces with a maintenance panel via the data bus where data is stored to assist maintenance personnel. This may be either a panel dedicated for EMUX or a CITS (Central Integration Test System) interface.

The line bus controller function is implemented with an electromechanical contactor. Similarly, external power switching and bus tie functions are implemented with electromechanical devices. Contactor details are discussed in Paragraph 4.1.3.

The emergency AC power system consists of an advanced technology generator, GCU and an electromechanical bus controller. The generator is driven by an APU and is interfaced with EMUX similar to the primary AC system to provide automatic corrective action in the event of imminent generator failure. The data is also stored to assist maintenance personnel in accomplishing corrective maintenance actions. The APU driven generator is rated for total maintenance load, total essential load or engine start load, whichever is greater; and operates as a generator only (no motoring capability).

A battery powered static inverter is used to supply power to loads in the event of momentary power loss and is rated to supply power to those loads which are sensitive to power interruptions. The capacity of the battery/inverter source is sufficient to power flight essential loads for a duration needed to recover the aircraft if both the main and auxiliary power sources become inoperative. The inverter and battery characteristics are given in Tables 2 and 3, and Figures 5 and 6. The inverter is switched to the bus by a solid state or hybrid bus controller to limit the power interruption time to less than 20 milliseconds.

Feeder voltage drop limits are shown in Figure 7. These limits were set to meet MIL-STD-704 requirements and to be compatible with available power distribution hardware.

The impedance of power feeders between the generator and point of regulation is defined by a 3 X 3 impedance matrix. This matrix defines the impedance associated with each power phase and the mutual reactance coupling between phases.

$$Z_{abc} = \begin{bmatrix} Z & M & M \\ M & Z & M \\ M & M & Z \end{bmatrix}$$

$$Z = (2Z_1 + Z_o)/3$$

$$M = (Z_o \text{ and } Z_1)/3$$

where Z_o and Z_1 are the zero and positive sequence impedances

The positive and zero sequence equations were calculated for the single-engine feeder requirements using the technique defined in Reference 7. Table 4 identifies the generator feeder parameters and resulting impedance matrix elements.

TABLE 2

INVERTER CHARACTERISTICS

Technology Type	Solid State (static)
Input Power	
Voltage	24±8 volts dc
Current (at 24 VDC)	245 amperes
Output Power	
Rating	5 KVA
Voltage at point of regulation	115/200 VAC
Current ratings - continuous	14.5 Amps/Phase
Overload rating	
2 Minutes	22 Amps/Phase
2 Seconds	28 Amps/Phase
Short circuit - 5 Seconds	28 Amps/Phase
Voltage regulation	115±1 volt ac
Frequency regulation	400±1 Hz
Voltage modulation	1 Volt (p-p)
Frequency modulation	2.0 Hz
Voltage waveform	
Crest factor	1.41±0.07
Harmonic content	4%
DC content	0.05 Volts
Extraneous frequency	±10 db from 1 vrms
Phase displacement - balance load	$120^{\circ} \pm 1^{\circ}$
Reactive load unbalance	5%
System efficiency at rated output	85%
Voltage transients	See Figure 5

TABLE 3

BATTERY CHARACTERISTICS

Technology Type	Nickel-Cadmium
Electrical Characteristics	
Rating	66 Amps-Hours
Voltage-rated load	28 Volts dc
Rated current - 15 minutes	250 Amps
Voltage - Current - Time characteristics	See Figure 6
Weight	175 Lbs.

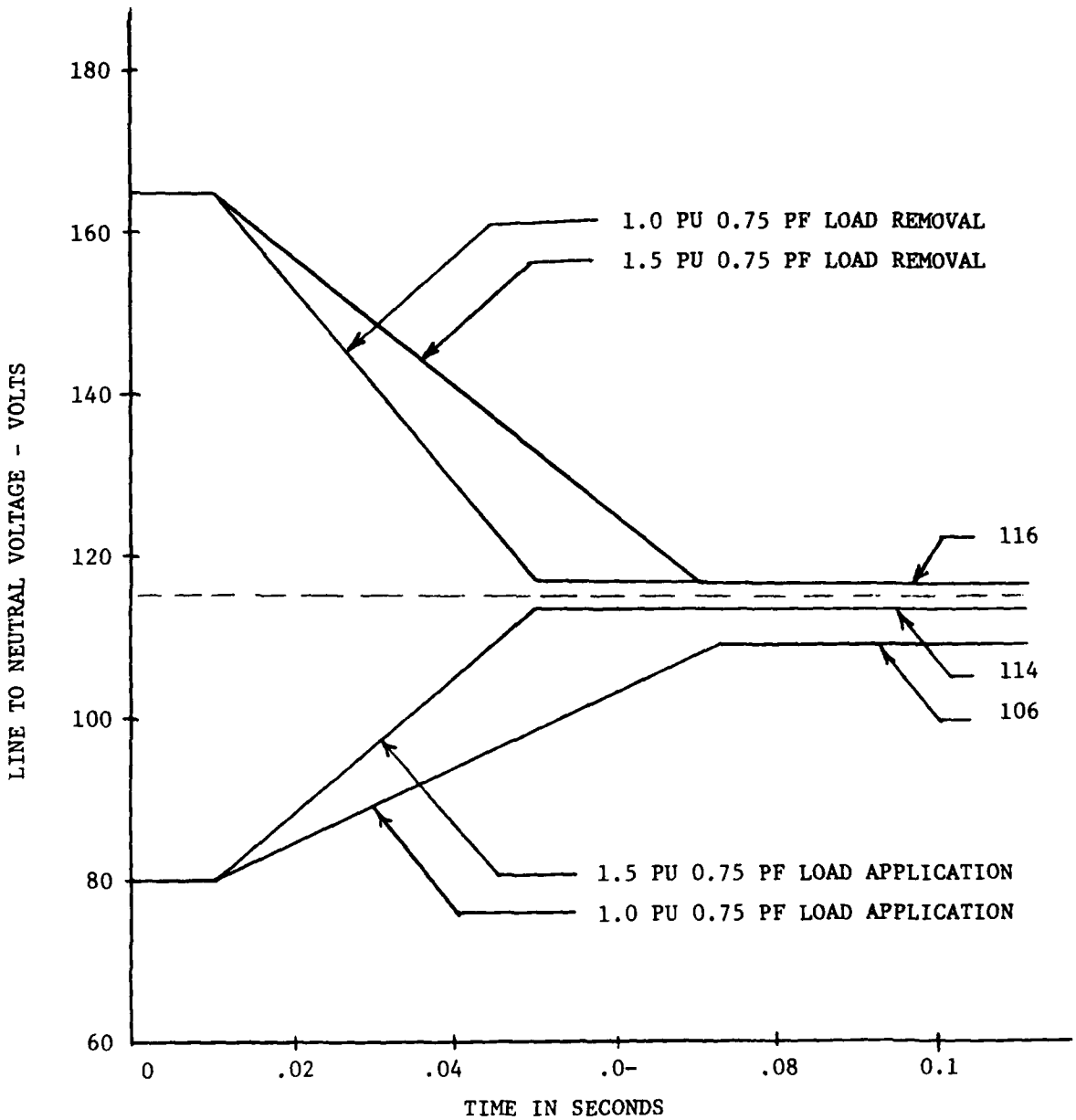

FIGURE 5 VOLTAGE TRANSIENT LIMITS
(STATIC INVERTER)

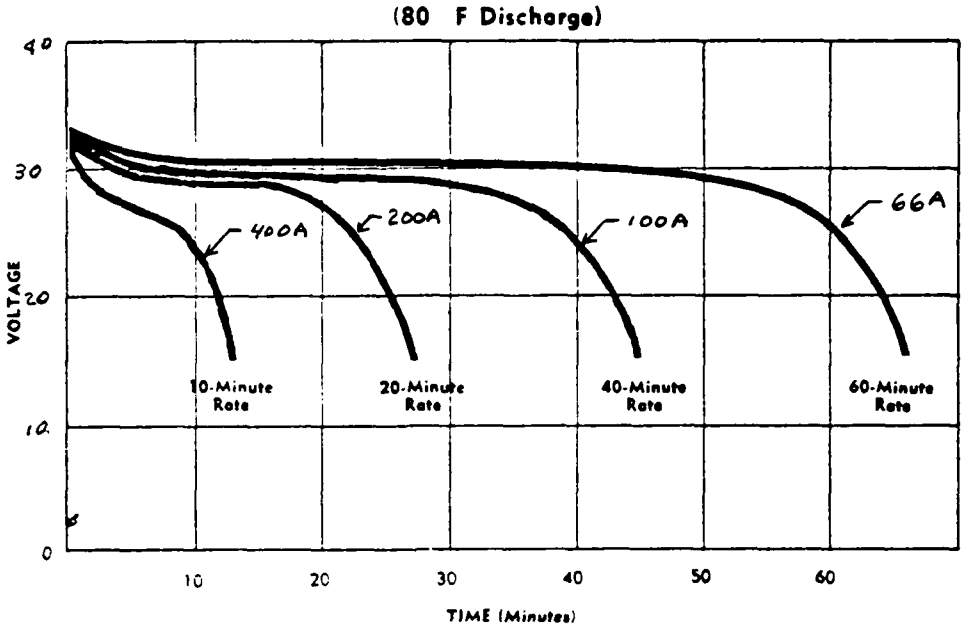

NI-CAD BATTERY - 66AH

FIGURE 6

TYPICAL DISCHARGE VOLTAGE CHARACTERISTICS

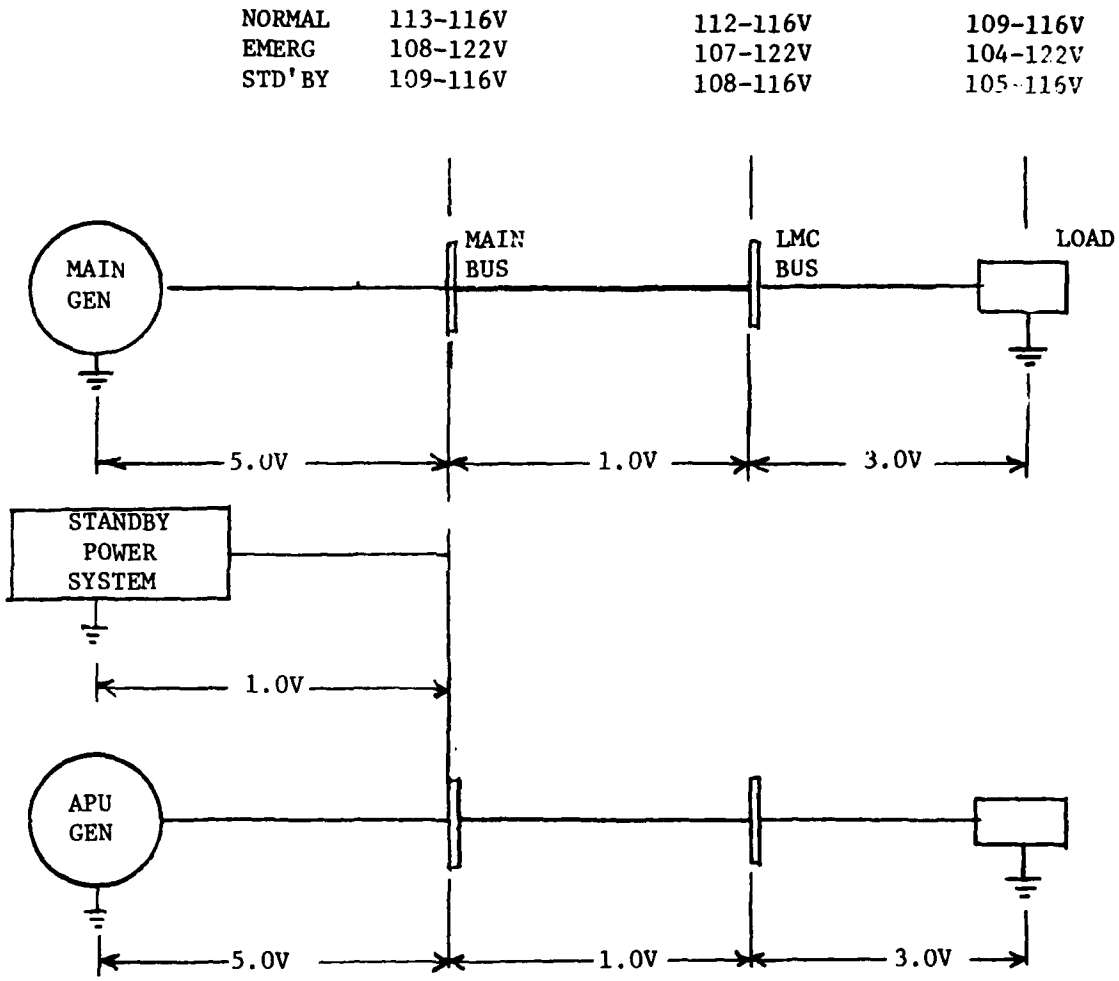

FIGURE 7 VOLTAGE DROP LIMITS

TABLE 4

GENERATOR FEEDER DATA (PER PHASE)

ITEM	FEEDER FROM	FEEDER TO	FEEDER LENGTH (FT)	RATING (AMPS/PH)	FEEDER SIZE (AWG)	FEEDER CONFIG	IMPEDANCE TERMS Z	IMPEDANCE TERMS M	LINE DROP (VOLTS)	3Ø WEIGHT (LBS)
1	Main Gen	Main Bus	20	174	2	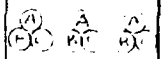	.00536+j.0094	.0016+j.0094	.97	14.34
2	Aux Gen	Aux Bus	10	174	2	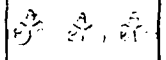	.00268+j.0047	.0008+j.00265	.48	7.17
3	Ext Pwr	Main Bus	15	174	2	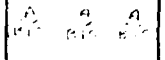	.00402+j.0071	.0012+j.004	.72	10.76
4	Inverter	Aux Bus	0*	15	18		0	0	0	0

*Inverter feeders will have negligible impedance since the inverter is installed inside the auxiliary bus center (i.e., feeder length insignificant).

DC power is not generated or distributed by the power system. A goal was set to standardize on one power characteristic for the entire aircraft. This simplifies the power bus management system and reduces the number of types of power switching hardware. Conventional aircraft typically generate and distribute 28 volts dc and 26 volts ac in addition to 115/200 VAC. The low voltage distributed power is a carry-over from pre-jet engine aircraft designs and is maintained simply because of existing utilization equipment.

There are only a few applications where 28 volts dc may be preferable to 115 VAC and no applications where 26 VAC is preferable. Distributed dc has advantages when used for supplying low power level buses from batteries during emergency or peculiar ground operations. Batteries are a good back-up power storage medium. Utilizing this power directly is more efficient than converting the dc to an ac characteristic. The other advantage of dc appears when a two-state electromechanical component is required. DC powered electromagnetic devices are simpler and/or more reliable than ac energized devices.

When analyzing the trade-offs at the system level of the number of power types, the advantages of selecting one power source characteristic outweighs the disadvantages. Whether the selected power type is ac or dc becomes a complicated issue dating back to the Tom Edison/George Westinghouse debate. Both ac and dc have advantages and disadvantages. It is felt that for the short term, a high voltage dc system would have more impact on utilization hardware and power switching hardware than an ac system. The primary disadvantages of the ac system are:

a. Lack of feasibility for providing a no-gap power system.

b. Three phases of power are required to furnish the same relative amount of power/unit weight as a high voltage dc system. The three power phases therefore requires three times the number of switching devices as the single "phase" dc system.

c. Paralleling ac systems is more complicated than dc systems.

4.1.2 ENGINE ELECTRIC START

Engine electric start is a viable option with either the VSCF and IDG generating system concepts. In the cycloconverter VSCF system, motor action is accomplished with either a wound rotor or permanent magnet rotor machine. However, it is more difficult with a wound rotor machine since excitation power must be transferred to the rotor even at zero speed. To overcome this problem, a control concept is employed which allows the machine to operate as a wound rotor induction motor in the start mode and as a synchronous machine in the generate mode. This problem is non-existent with the Permament Magnet Rotor Machine (PMG) since it supplies its own excitation. The PMG system can provide start torque with the machine operating either as a synchronous motor or a brushless DC motor. The DC motor equivalent is preferred because of better torque characteristics.

Electric engine start in an IDG system is implemented by initially operating the machine as an induction motor. This is done with very little load on the motor by maintaining the variable displacement pump of the drive at approximately zero stroke. When the motor is near rated speed, motor operation is electrically changed to that of a synchronous motor. The drive hydraulic pump units are controlled by a servo-valve to provide sufficient engine cranking torque needed to overcome the engine inertia. Once ignition occurs, the engine becomes self-sustaining but cranking torque is maintained

until starter cut-out speed is reached to minimize the acceleration time. When the engine reaches the underspeed point, the servo-valve returns to the generating system mode of governing the speed of rotation and the machine operates as a generator.

4.1.3 POWER BUS MANAGEMENT

The power bus management subsystem is designed at two levels. The first addresses the switching and protection necessary to establish the "point of regulation" for each generator system. This portion of the bus management system is referred to as the Main and Auxiliary Bus Management Centers. These centers are located in general proximity to the associated power source.

The second level consists of the interface between the bus management and power distribution systems. This interface is established by the number of Load Management Centers (LMCs) optimum (from a weight and vulnerability criteria) for the power distribution system. The bus management circuitry routes (and protects) power to the LMCs from the main and auxiliary bus centers. Figure 8 depicts these two levels of bus management.

The power contactors at the top level of bus management (i.e., contactors which establish the point of regulation buses) are controlled by the dedicated generator control units based on logic inputs from the aircrew. For example, the Main Line Contactor (MLC1) is energized by the main generator's control electronics if the cockpit main generator switch is positioned to "ON", and generator characteristics are within specification limits. Current transformers are interconnected in the generator feeder network as illustrated in Figure 9 to feed differential current information to the control electronics for feeder and generator protection. Contactors are commanded

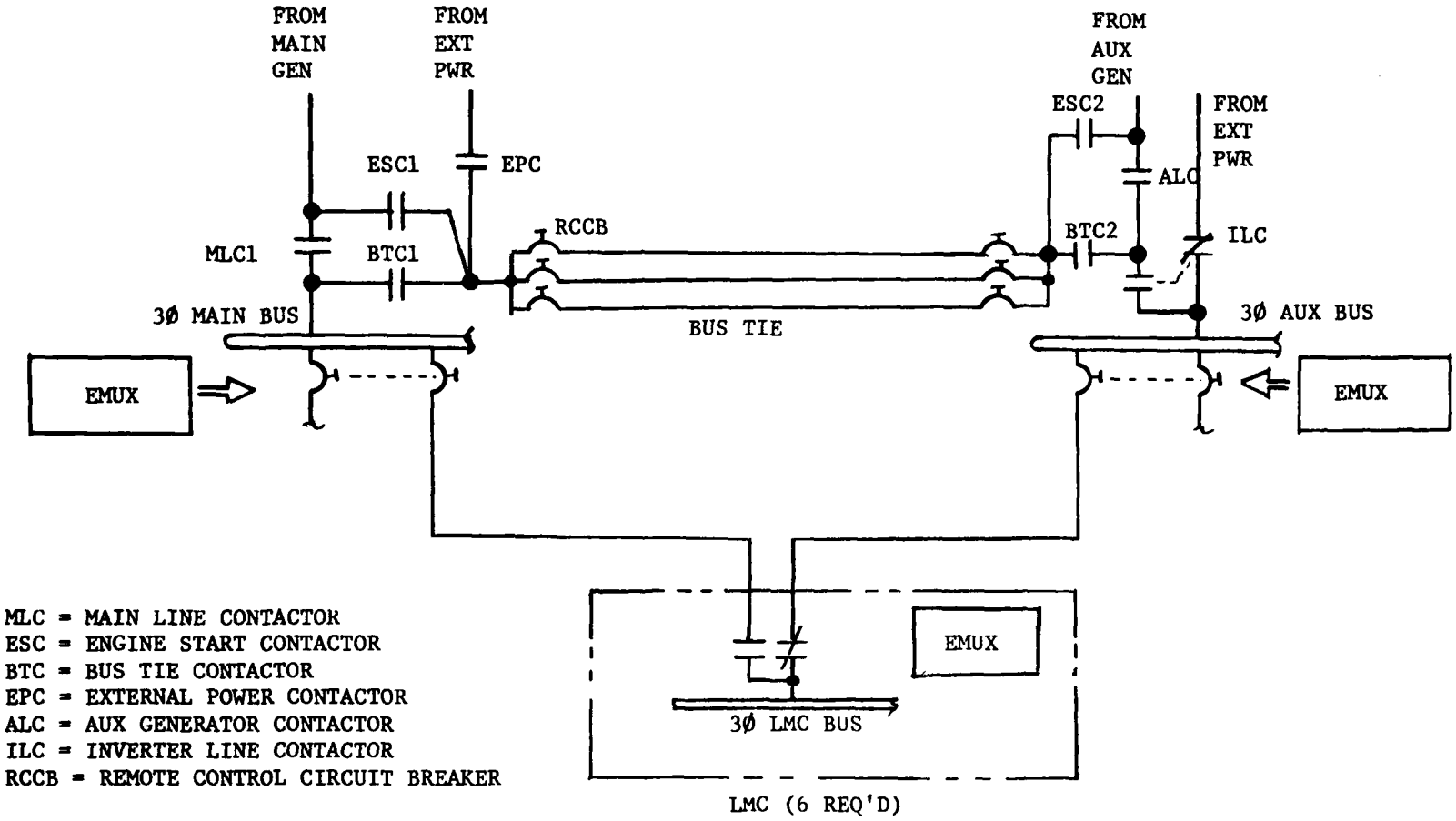

MLC = MAIN LINE CONTACTOR
ESC = ENGINE START CONTACTOR
BTC = BUS TIE CONTACTOR
EPC = EXTERNAL POWER CONTACTOR
ALC = AUX GENERATOR CONTACTOR
ILC = INVERTER LINE CONTACTOR
RCCB = REMOTE CONTROL CIRCUIT BREAKER

FIGURE 8 BUS MANAGEMENT SUBSYSTEM

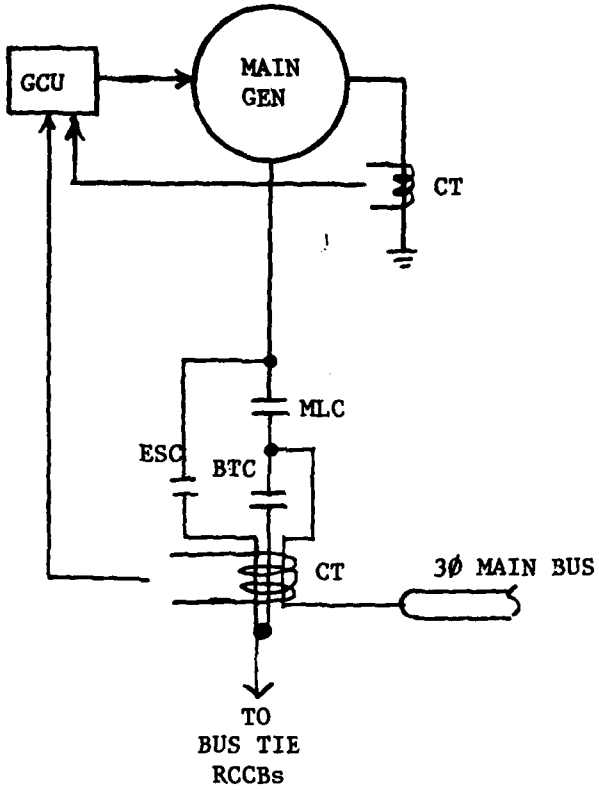

FIGURE 9

DIFFERENTIAL CURRENT PROTECTION

"opened" if a fault condition appears. The current transformer interconnection scheme affords protection during normal operation (power through main contactor to 3 phase bus), engine starting mode (BTC and MLC opened and ESC closed) and bus tie mode (MLC and BTC closed and ESC opened). When power is routed from a second source to the main bus, the current transformers shown in Figure 9 are no longer operational. During this operating mode, current transformers associated with the second power source (not shown) provide fault protection.

The main and auxiliary buses are interconnected by a redundant bus tie network. Figure 10 (an expansion of Figure 8) defines the major components of this network. The bus tie network utilizes a common scheme for providing a redundant bus tie while assuring isolation of faults on any one of the bus tie feeders. Each of the Remote Controlled Circuit Breakers (RCCBs) are rated at approximately 1/2 the bus rating (in this case - 1/2 of 174 = 87 amps). In the single engine design, 100 ampere rated 3 phase RCCBs are selected.

If a fault occurs on the feeder shown in Figure 10, the currents will flow in the directions shown by the arrows (assuming auxiliary bus is being fed power from the main bus). In the fault condition shown, RCCB13 will typically trip first. The full fault current will then flow through RCCB23, but only 1/2 the fault current will flow through the other circuit breakers. This splitting of the fault current guarantees that RCCB23 will trip next, thereby totally isolating the faulted feeder. Current flow will then continue to the auxiliary bus through the top two sets of remaining bus tie feeders.

It should be noted that the bus switching and interconnection selected uses a common bus tie network for both engine starting and "normal" bus tie operations. This dual function may result in selecting higher rated RCCB's

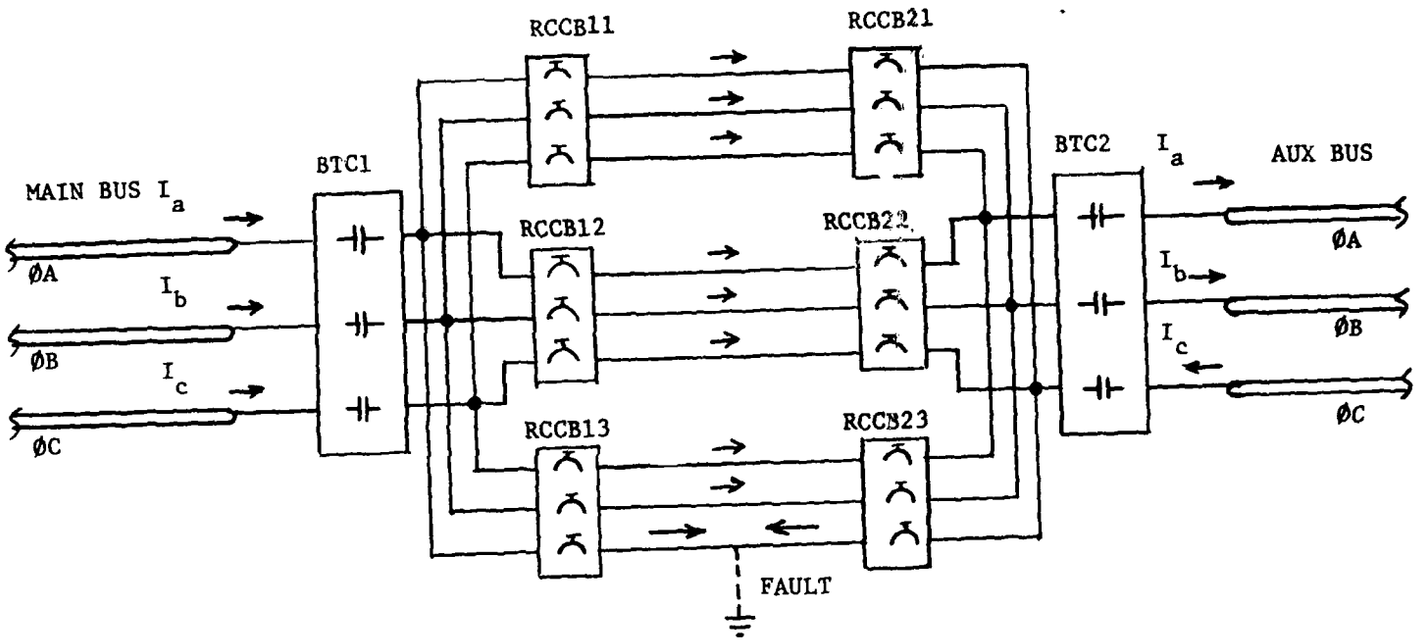

FIGURE 10 BUS TIE NETWORK

for engine starting than would be selected for an inflight bus tie function alone. The reduction in bus tie hardware is, however, worth this non-optimum rating selection.

As illustrated in Figure 8, the auxiliary bus is also powered by a battery powered inverter. This arrangement is expanded in Figure 11. Since the bus tie link will normally be closed in the single engine aircraft, the phase loss detector shown in the figure will be monitoring power from either the main or the auxiliary generators (or external power). If the three power phases are intact, the Inverter Line Contactor (ILC), will be energized, thereby connecting the generators to the auxiliary bus. Simultaneously the battery line contactor will open, unloading the battery and de-energizing the inverter. Loss of any phase from the generators will result in de-energizing the inverter line contactor and closing the battery contactor. An operating inverter will then be connected to the auxiliary power bus. The pilot can override this automatic sequence if desired. This transfer operation will result in power gaps at the auxiliary bus level for approximately 20 milliseconds maximum. Shorter duration power gaps are feasible but reducing the gap time could result in source transfer into a fault before the fault condition is cleared or nuisance transfers could occur during voltage transient conditions. Sufficient time must transpire to assure that the bus management system is responding to a fault condition as opposed to a voltage transient. Due to the oscillating nature of ac power, several cycles (at 2.5 milliseconds each) must be averaged to discriminate between these two conditions. However, several hundred milliseconds may be required for an RCCB to clear a feeder fault. While delaying power transfer until all faulted RCCB's have tripped would be desirable the resulting gap time ($\approx$400 milliseconds) may be unacceptable. In many cases, the fault can be partially isolated by the power source transfer relays in the LMCs within the 20

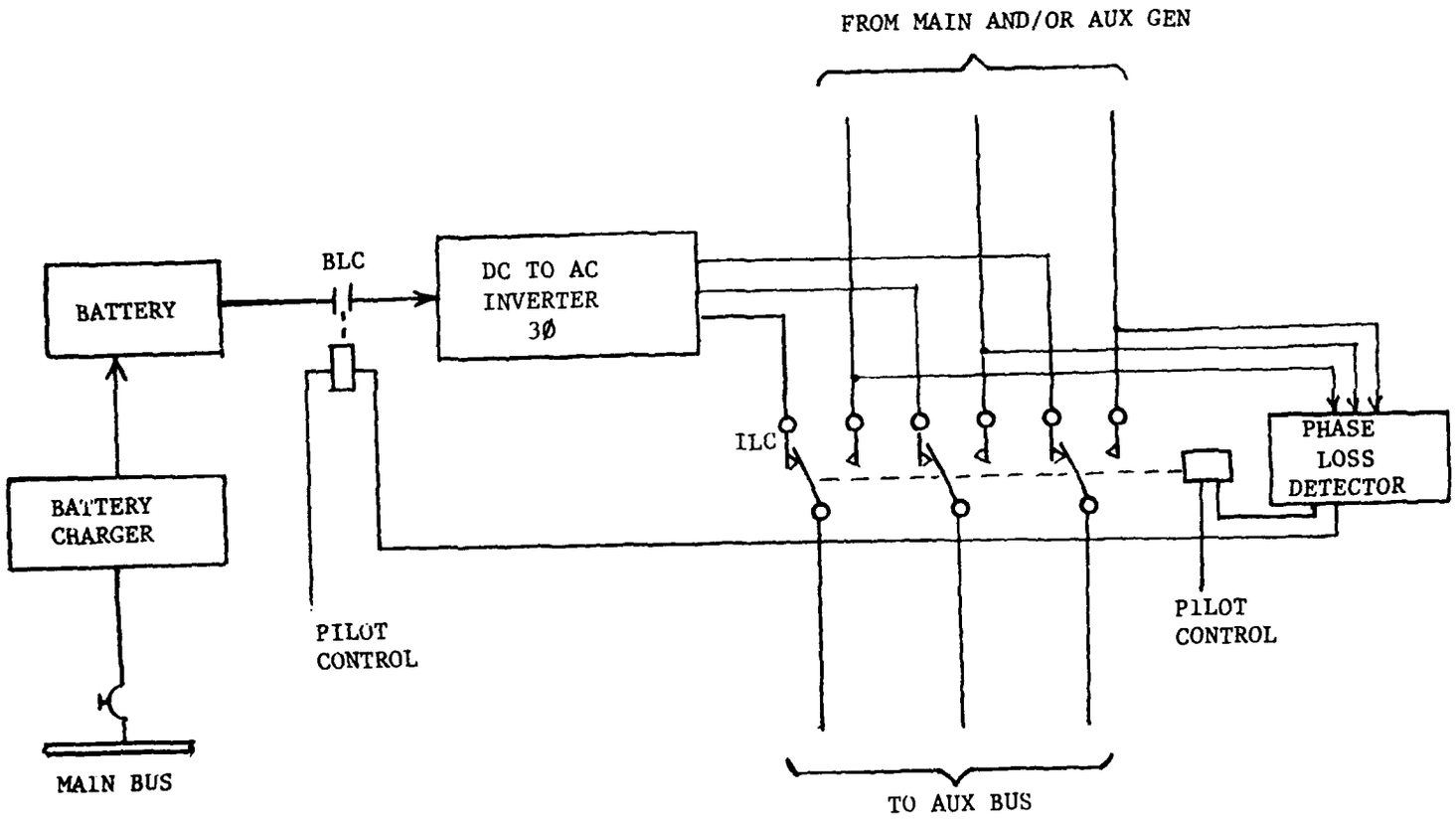

FIGURE 11

INVERTER CONNECTION TO AUXILIARY BUS

millisecond gap period. For this reason, a 20 millisecond maximum power gap goal was established.

Under worst case conditions, meeting the 20 millisecond gap goal requires switching at two levels. The auxiliary bus must be connected to the inverter (the inverter must be energized) and the LMC must transfer to the auxiliary bus feeder. The LMC transfer should ideally occur during the auxiliary bus transfer operation. This simultaneous transfer is feasible since similar but fewer actions are required to complete LMC transfer as are required for auxiliary bus transfer to the inverter.

In order to meet the 20 millisecond maximum power gap, fast response power contactors are necessary. Figure 12 illustrates typical operate and release times of aerospace contactors as a function of contact rating for nominal coil voltages. The time diagram of Figure 13 concludes that contactor response times should be:

Device	Operate	Release
LMC Transfer Relay	12.5ms	12.5ms
Battery Line Contactor	4 ms	15 ms
Inverter S Line Contactor	12.5ms	12.5ms

These response times are faster than conventional contactors. In addition, hybrid contactors (electromechanical relay with solid state contact shunt) could meet the operate time as long as the contact configuration is "single throw". The operate time for a "double throw" hybrid configuration (normally closed and normally opened contacts) is the same as the operate time of the embedded electromechanical relay, and therefore no response time improvement results from selecting the hybrid configuration. The LMC Transfer Relay and Inverter Line Contactor require the double throw function, therefore an

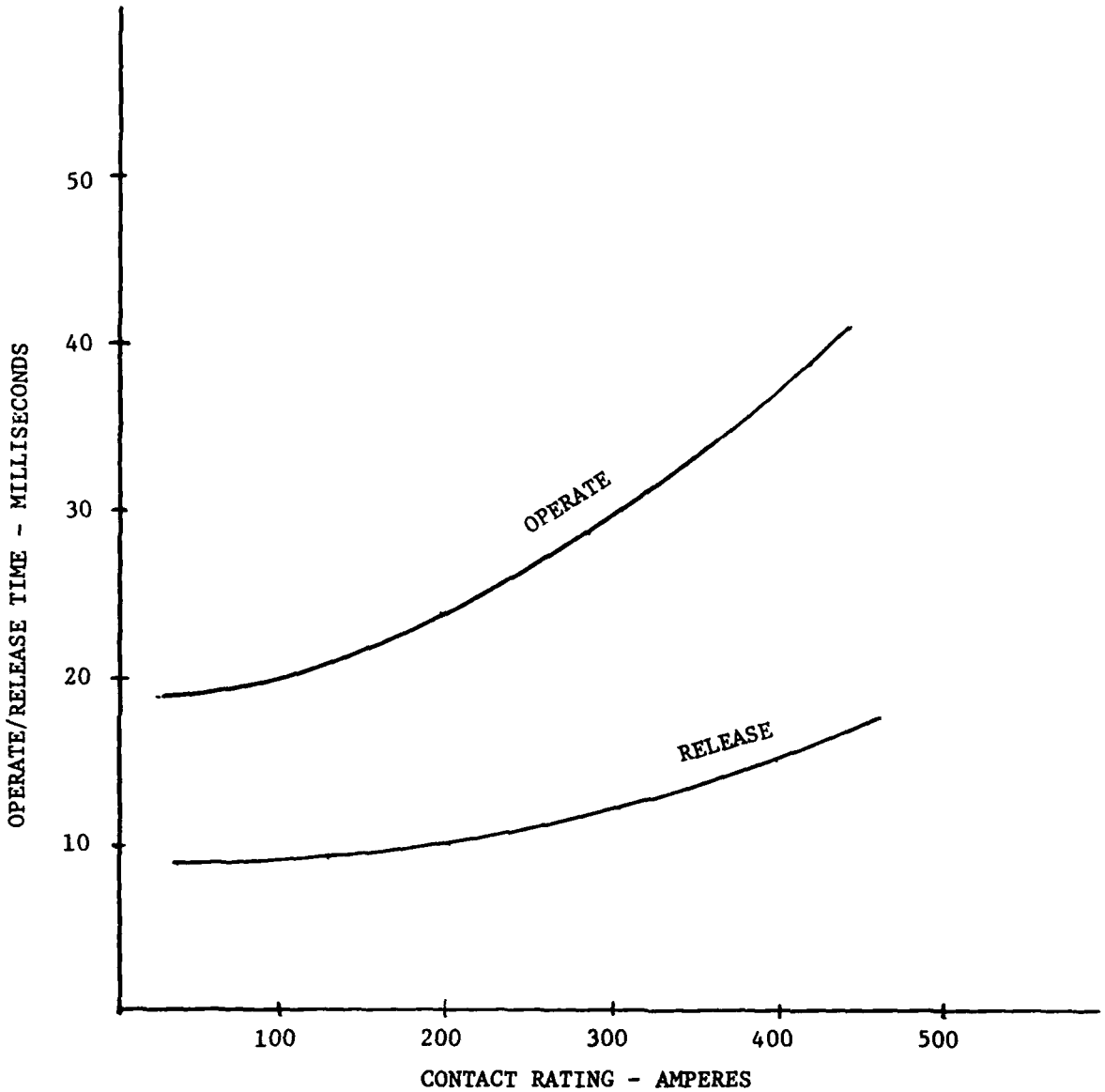

FIGURE 12

CONTACTOR RESPONSE TIME VS. RATING

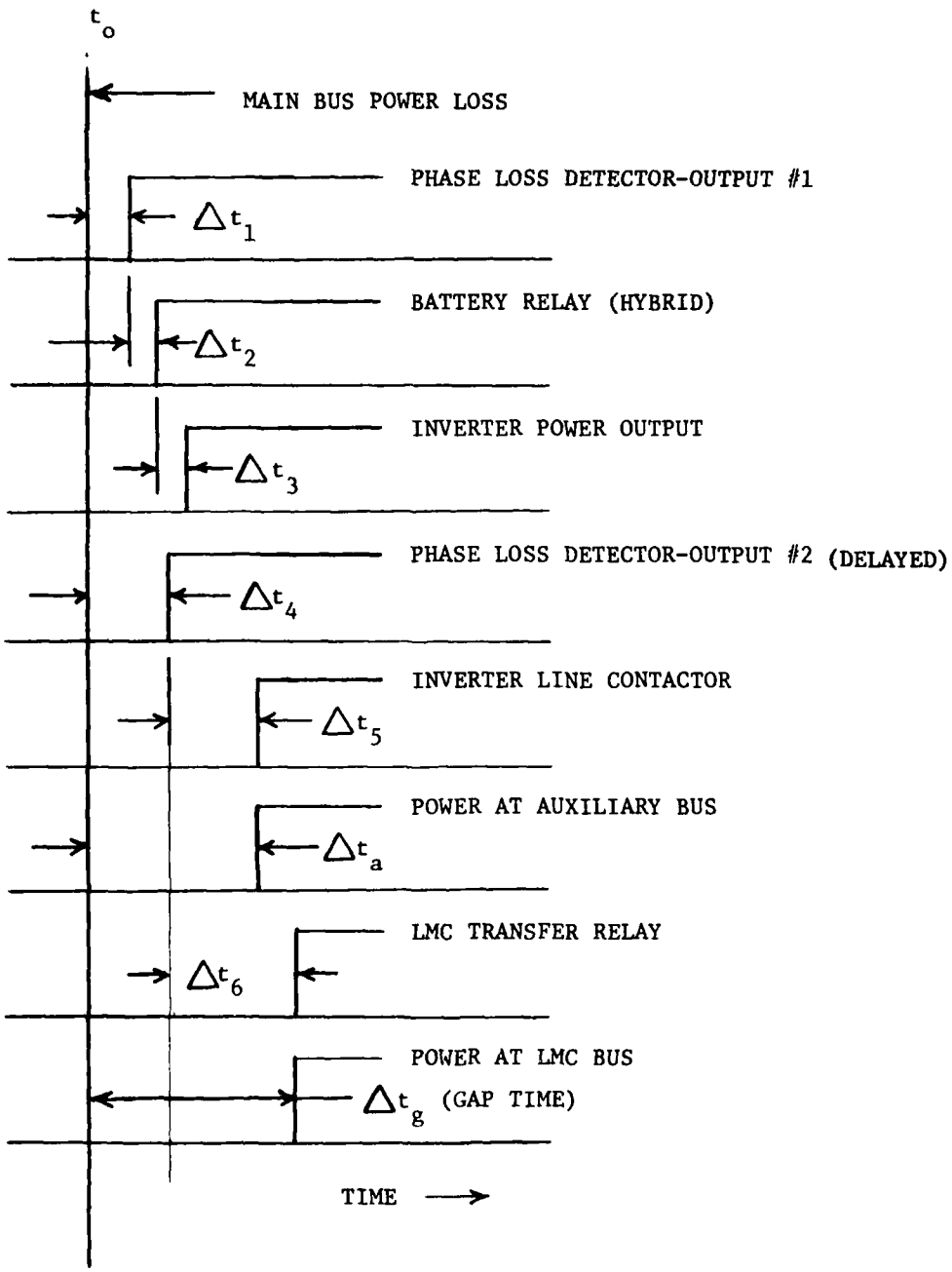

$$\Delta t_a \gg \Delta t_1 + \Delta t_2 + \Delta t_3 \text{ or } \Delta t_4 + \Delta t_5$$

$$\Delta t_g \gg \Delta t_a \text{ or } \Delta t_4 + \Delta t_6$$

FIGURE 13 POWER GAP TIMING DIAGRAM

electromechanical contactor is used for these two functions. The battery line contactor requires a single throw, normally opened switching function and a hybrid device is used to accelerate power up of the inverter.

Short of designing a special purpose relay to serve the LMC transfer and inverter contactor functions, another option is available to improve response time of conventional relays. This option requires that the phase loss detector produce a variable voltage output to drive the two relays. Figure 14 depicts the general waveshape of this relay driver output. Figures 15 and 16 illustrate typical operate and release time characteristics as a function of the ratio of applied coil voltage to coil operate and release voltage ratings. The figures define the general shape of the operate/release time function and should not be used as actual design curves since each relay will have different specific voltage and time values.

It is assumed for this study that an appropriate value for the Figure 14 voltages can be determined from experimental tests of the specific power contactor to be used. The phase bus detector circuit is then designed to produce those voltage values.

The steady-state generated power is divided among the six LMCs as defined in Table 5 for nominal levels. Due to transient load conditions, the actual design rating may be different as is noted in the table. Tables 6 and 7 lists the power switching and protection hardware required to implement the bus management subsystem. The 3 phase remote controlled circuit breakers listed in Table 7 are controlled automatically via EMUX. The control interface of the MIL-C-83383 RCCB is modified slightly for compatibility with EMUX remote terminal and is designed such that a "normally closed" function is provided. The trip characteristics of these RCCB's are illustrated in Figure 17. The EMUX interface provides three functions:

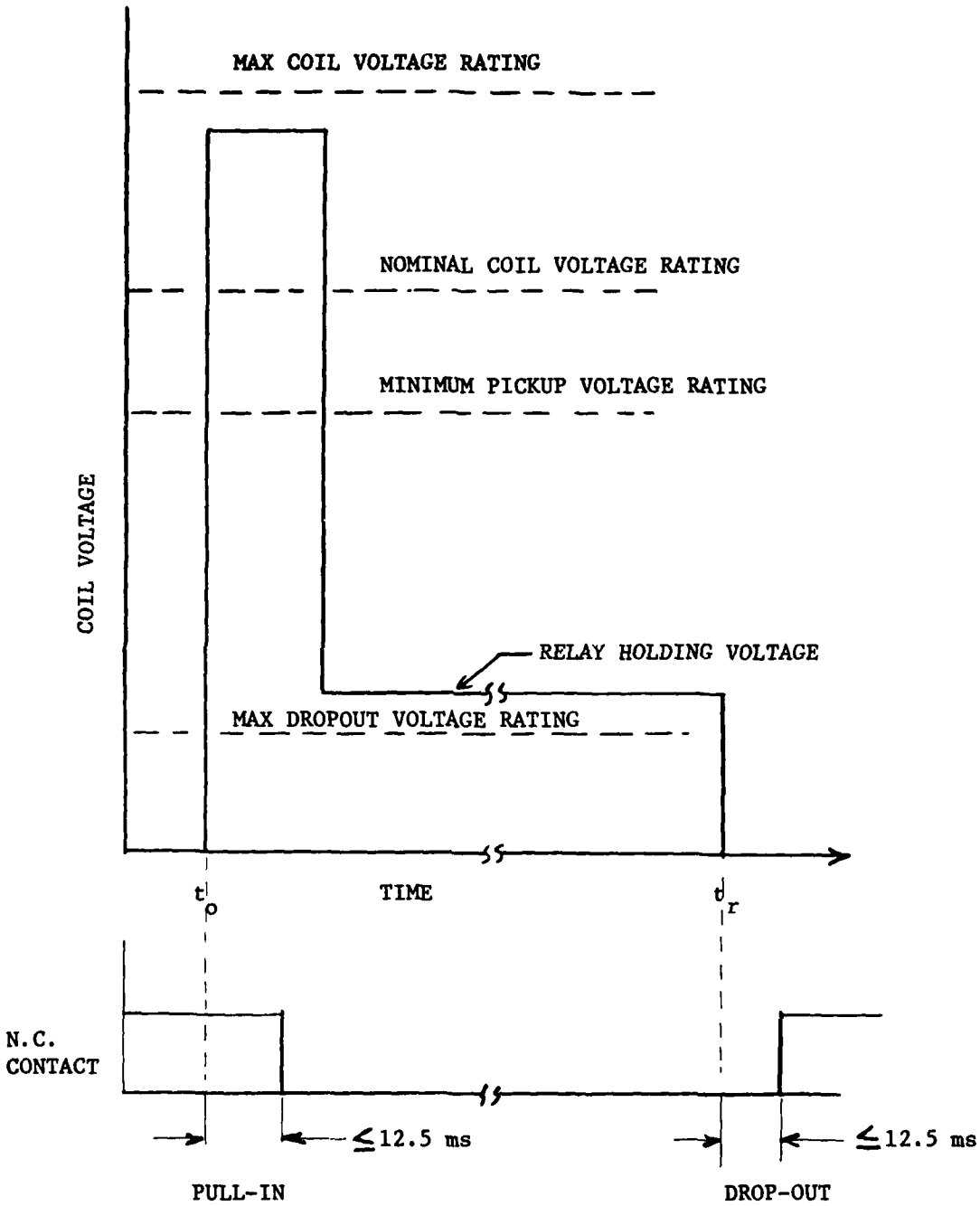

FIGURE 14 RELAY DRIVER CHARACTERISTICS

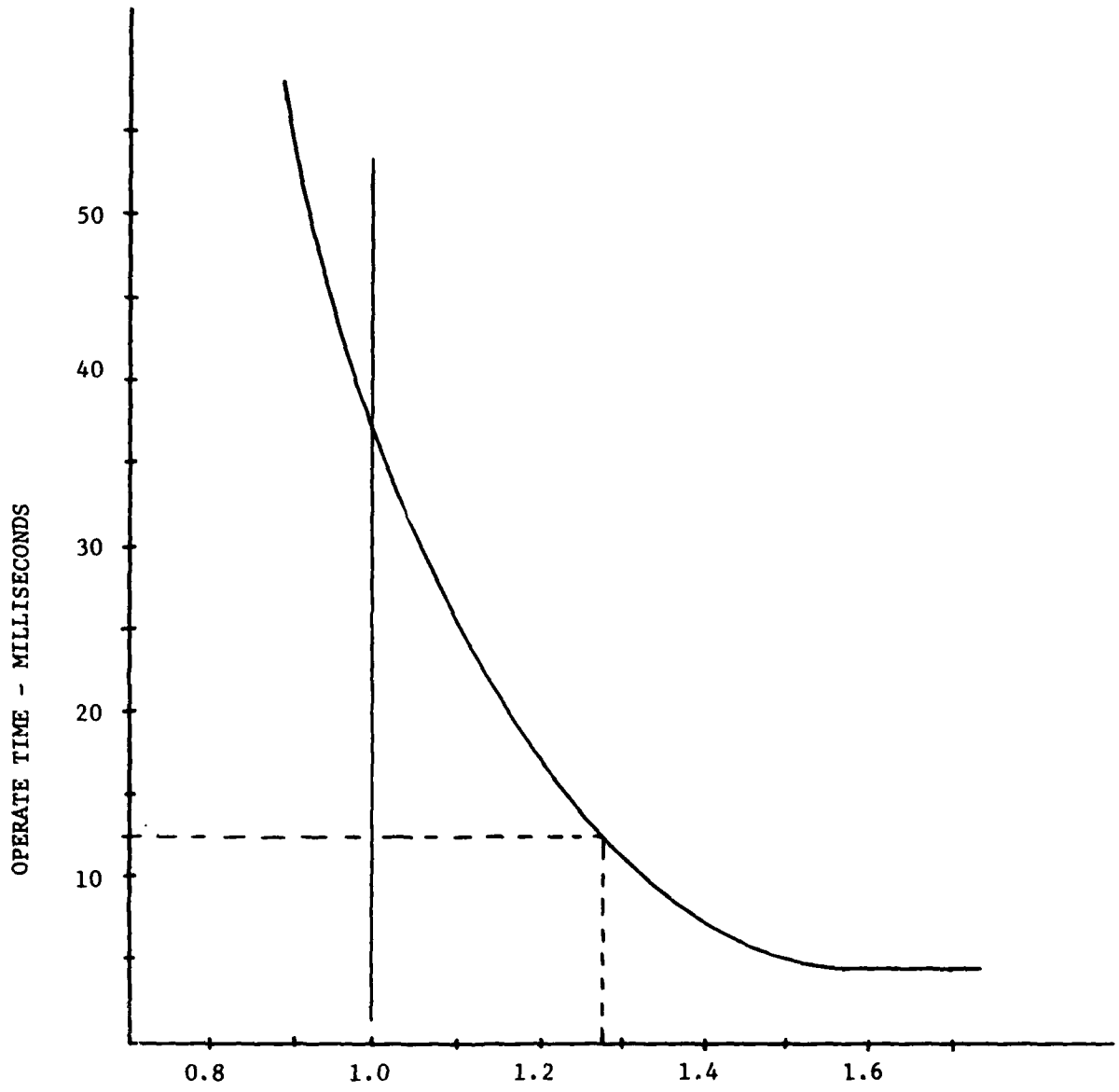

FIGURE 15

TYPICAL OPERATE TIME CHARACTERISTICS

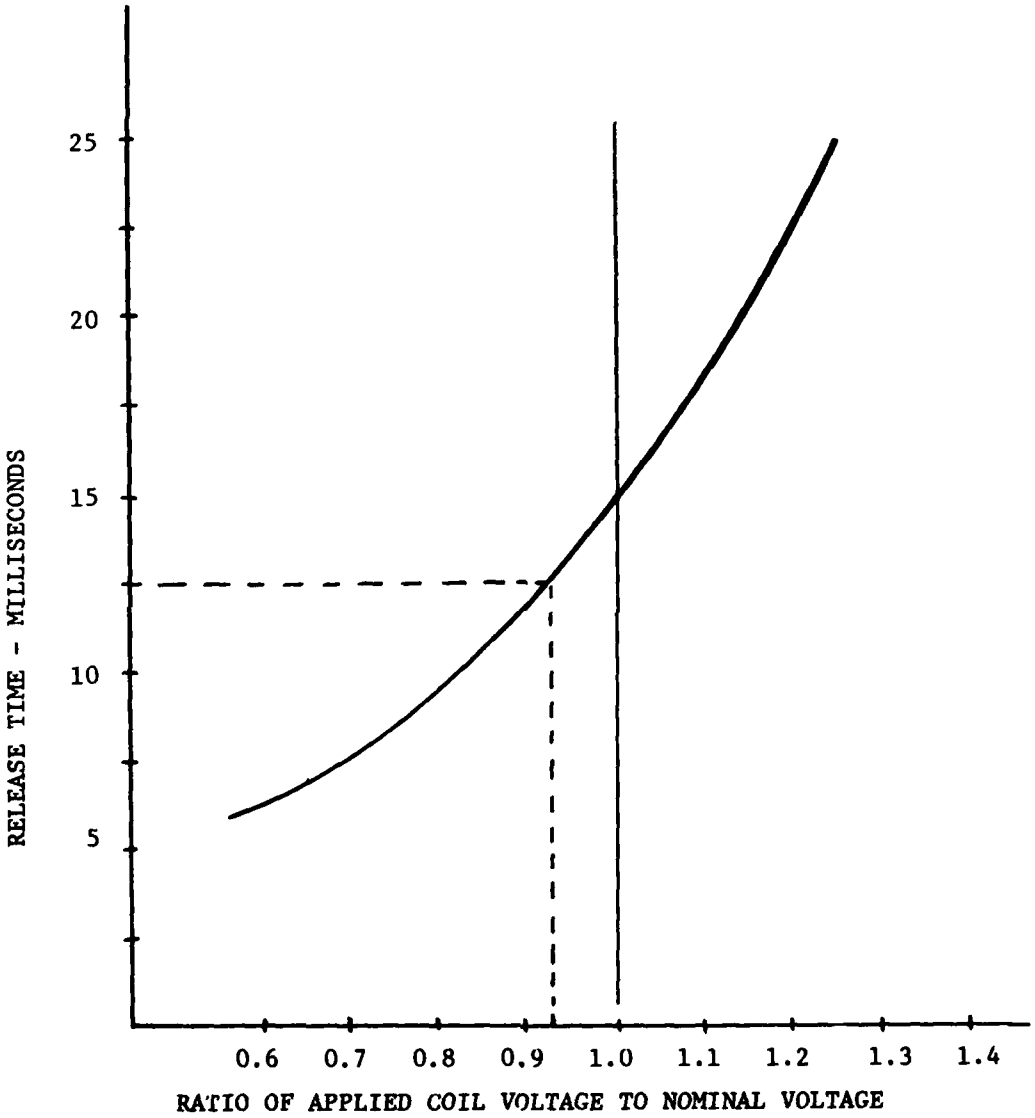

FIGURE 16

TYPICAL RELEASE TIME CHARACTERISTICS

TABLE 5

LOAD MANAGEMENT CENTER RATINGS

LMC LOCATION	CONTINUOUS LOAD LEVEL (3 PHASE KVA)		RCCB RATING	
	NOMINAL RATING	ACTUAL DESIGN	AMPS/PHASE	3 PHASE KVA
Cockpit	13.2	13.8	50	17.25
RH Electronic Bay	15	15.5	60	20.7
LH Electronic Bay	10.8	10.7	40	13.8
RH Wing Stations	9.0	9.0	40	13.8
LH Wing Stations	9.0	9.0	40	13.8
Aft Equipment	3.0	3.1	15	5.175

TABLE 6

BUS MANAGEMENT SWITCHING HARDWARE

DEVICE FUNCTION	DEVICE TYPE	PART NUMBER (*SIMILAR TO)
Main Generator Line Contactor	Power Contactor, 200A	*BA-104AA (Hartman)
Auxiliary Generator Line Contactor	Power Contactor, 200A	*BA-104AA (Hartman)
External Power Line Contactor	Power Contactor, 200A	*BA-104AA (Hartman)
Engine Start Contactor No. 1	Power Contactor, 200A	*BA-104AA (Hartman)
Engine Start Contactor No. 2	Power Contactor, 200A	*BA-104AA (Hartman)
Bus Tie Contactor No. 1	Power Contactor, 200A	*BA-104AA (Hartman)
Bus Tie Contactor No. 2	Power Contactor, 200A	*BA-104AA (Hartman)
Battery Line Contactor	Power Contactor, Hybrid	*MS24184-D1 Hybrid Contacts
Inverter Line Contactor	Power Contactor, 80A	*B-123J (Hartman)
LMC Transfer Contactor - Ckpt	Power Contactor, 100A	*B-233B (Hartman)
LMC Transfer Contactor - LH E1	Power Contactor, 50A	*M6106/16-003
LMC Transfer Contactor - RH E1	Power Contactor, 100A	*B-233B (Hartman)
LMC Transfer Contactor - LH Wng	Power Contactor, 50A	*M6106/16-003
LMC Transfer Contactor - RH Wng	Power Contactor, 50A	*M6106/16-003
LMC Transfer Contactor - Aft	Power Contactor, 25A	*MS27743-22

TABLE 7

FEEDER PROTECTOR HARDWARE

DEVICE FUNCTION	PART NUMBER (*SIMILAR TO)
Main Bus to Cockpit LMC Feeder	MIL-C-83383/4A-09*
Aux Bus to Cockpit LMC Feeder	MIL-C-83383/4A-09*
Main Bus to RH Electr LMC Feeder	MIL-C-83383/4A-10*
Aux Bus to RH Elect LMC Feeder	MIL-C-83383/4A-10*
Main Bus to LH Electr LMC Feeder	MIL-C-83383/4A-08*
Aux Bus to LH Electr LMC Feeder	MIL-C-83383/4A-08*
Main Bus to RH Wing LMC	MIL-C-83383/4A-08*
Aux Bus to RH Wing LMC	MIL-C-83383/4A-08*
Main Bus to LH Wing Bus	MIL-C-83383/4A-08*
Aux Bus to LH Wing Bus	MIL-C-83383/4A-08*
Main Bus to Aft LMC	MIL-C-83383/4A-04*
Aux Bus to Aft LMC	MIL-C-83383/4A-04*
LH Bus Tie - Section 1, 2 & 3	MIL-C-83383/4A-13* (150 Amp)
RH Bus Tie - Section 1, 2 & 3	MIL-C-83383/4A-13* (150 Amp)

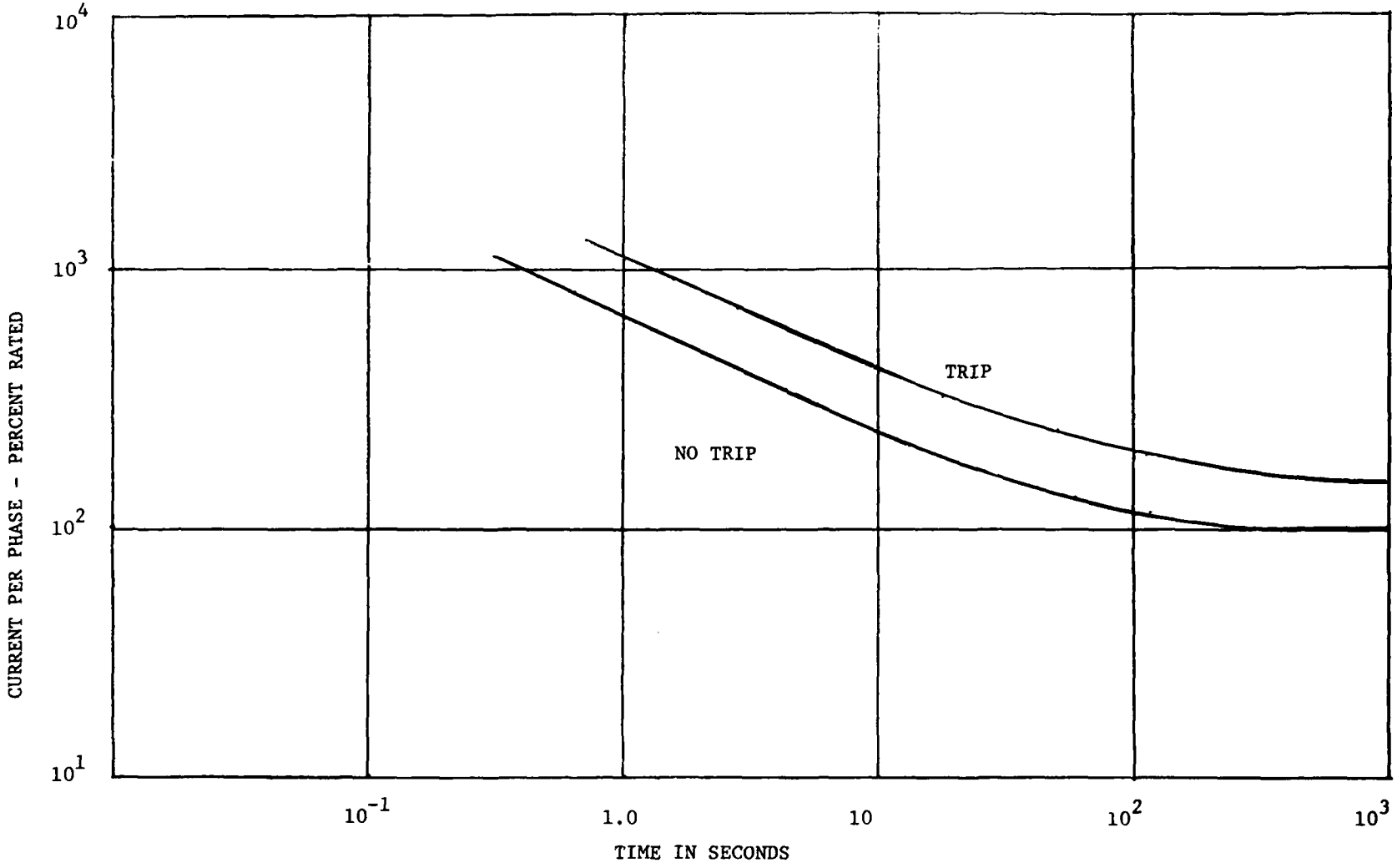

FIGURE 17 RCCB TRIP CHARACTERISTICS

a. RCCB status monitoring

b. Auto-reset of RCCB trips via EMUX subroutines

c. Manual override of RCCB state by aircrew

The impedance of the bus management system power feeders is defined by a 3 x 3 impedance matrix Z_{abc} similar to the generator system feeder impedances. Table 8 identifies these feeder characteristics.

Each LMC is supplied power from both the main and auxiliary power buses through dedicated feeders and feeder protectors (RCCBs). Inside the LMC, power transfer circuitry selects the power input from the main bus for connection to the LMC bus if the power available is within allowable voltage limits. Figure 18 illustrates these LMC internal functions. The phase loss detector circuitry functions similar to that discussed for the inverter line contactor control. If 3 phase power is available from the main power bus feeders and each phase voltage is above a minimum value, the transfer relay will be energized by the phase loss detector's relay driver.

Within 20 milliseconds of loss of any phase (or abnormally low voltage), the transfer relay will de-energize and connect the auxiliary bus feeders to the LMC bus. The EMUX terminal shown in Figure 18 monitors the status of power from the main bus via the phase loss detector. This monitor function provides an input to the load management routine resident in the EMUX processor. In addition, the EMUX terminal interfaces with the load controllers for utilization equipment power control. The load controller, load management and EMUX systems are discussed in more detail in Section 4.1.4.

Finally, Figures 19A through 19E illustrate power flow from sources to the various buses for the various aircraft operating modes.

TABLE 8

BUS MANAGEMENT FEEDER DATA (PER PHASE)

ITEM	FEEDER FROM	FEEDER TO	FEEDER LENGTH (FT)	RATING (AMPS/PH)	FEEDER SIZE (AWG)	CONFIG	IMPEDANCE TERMS** Z	IMPEDANCE TERMS** M	LINE DROP (VOLTS)	3Ø WEIGHT (LBS)
1	BUS TIE*			174	-	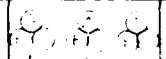	-	-	-	6.0
1a	Main Bus	Aux Bus	10	87	8		.0064+j.0085	.002+j.0062	.43	2.0
1b	Main Bus	Aux Bus	10	87	8		.0064+j.0085	.002+j.0062	.43	2.0
1c	Main Bus	Aux Bus	10	87	8		.0064+j.0085	.002+j.0062	.43	2.0
2	Main Bus	Cockpit LMC	25	40	8		.019+j.0163	.0016+j.011	.74	4.8
3	Main Bus	RH Elect LMC	10	45	10		.012+j.007	.00063+j.0047	.51	1.1
4	Main Bus	LH Elect LMC	10	31	12		.0194+j.0073	.00063+j.0048	.59	0.7
5	Main Bus	RH Wing LMC	30	26	8		.0234+j.0185	.0024+j.012	.57	5.7
6	Main Bus	LH Wing LMC	30	26	8		.0234+j.0185	.0024+j.012	.57	5.7
7	Main Bus	Aft Equip LMC	5	9	18		.0325+j.004	.0003+j.0027	.29	0.2
8	Aux Bus	Cockpit LMC	20	8	40		.0153+j.013	.0013+j.0085	.59	3.8
9	Aux Bus	PH Elec LMC	5	45	12		.0097+j.0037	.0003+j.0024	.43	.4
10	Aux Bus	LH Elec LMC	5	31	14		.015+j.0039	.0003+j.0026	.46	.25

* The redundant bus tie feeder data assumes that only 2 of the 3 bus tie links are operational.

TABLE 8

BUS MANAGEMENT FEEDER DATA (PER PHASE) (CONTINUED)

ITEM	FEEDER FROM	FEEDER TO	FEEDER LENGTH (FT)	RATING (AMPS/PH)	FEEDER SIZE (AWG)	FEEDER CONFIG	IMPEDANCE TERMS** Z	IMPEDANCE TERMS** M	LINK DROP (VOLTS)	3Ø WEIGHT (LBS)
11	Aux Bus	RH Wing LMC	30	26	8		.0234+j.0185	.0024+j.0117	.57	5.7
12	Aux Bus	LH Wing LMC	30	26	8		.0234+j.0185	.0024+j.0117	.57	5.7
13	Aux Bus	Aft Equip LMC	10	9	18		.065+j.0083	.0006+j.005	.58	.25

$$** \quad \left[Z_{abc} \right] = \begin{vmatrix} Z & M & M \\ M & Z & M \\ M & M & Z \end{vmatrix}$$

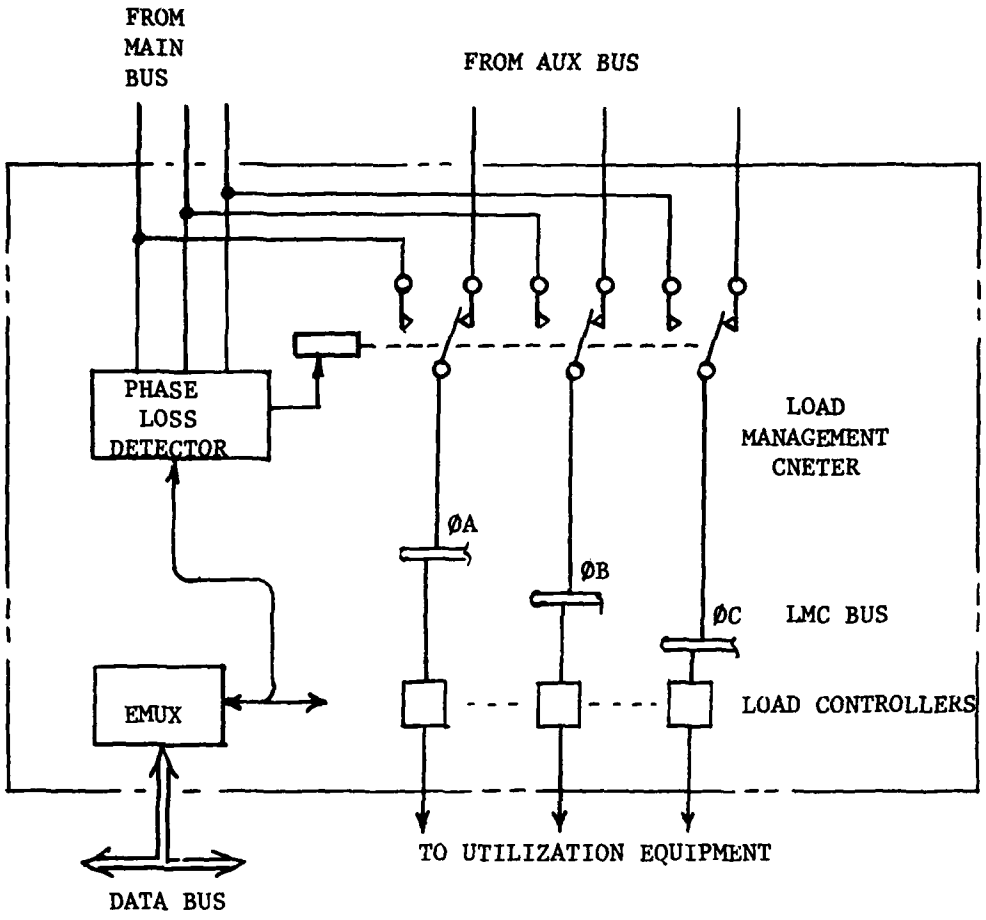

FIGURE 18

LOAD MANAGEMENT CENTER POWER TRANSFER

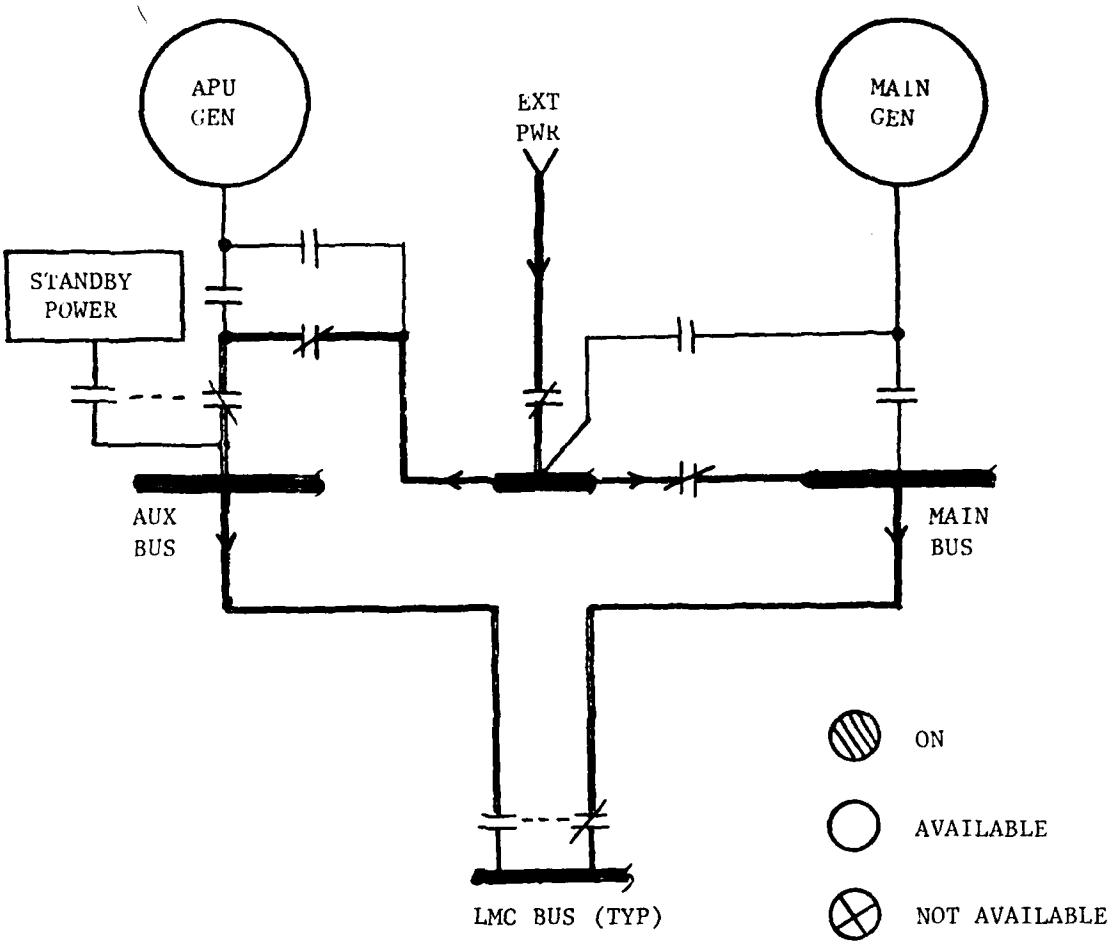

FIGURE 19A EXTERNAL POWER

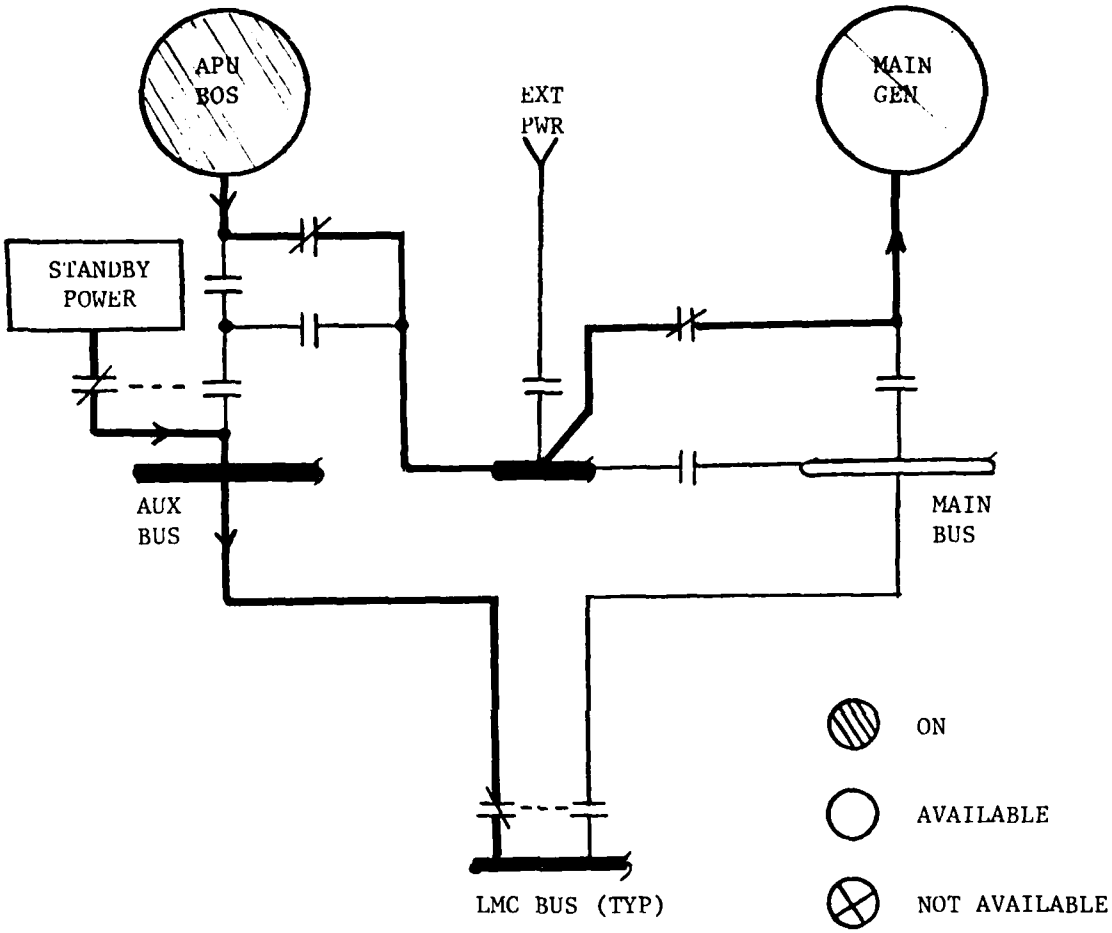

FIGURE 19B ENGINE START

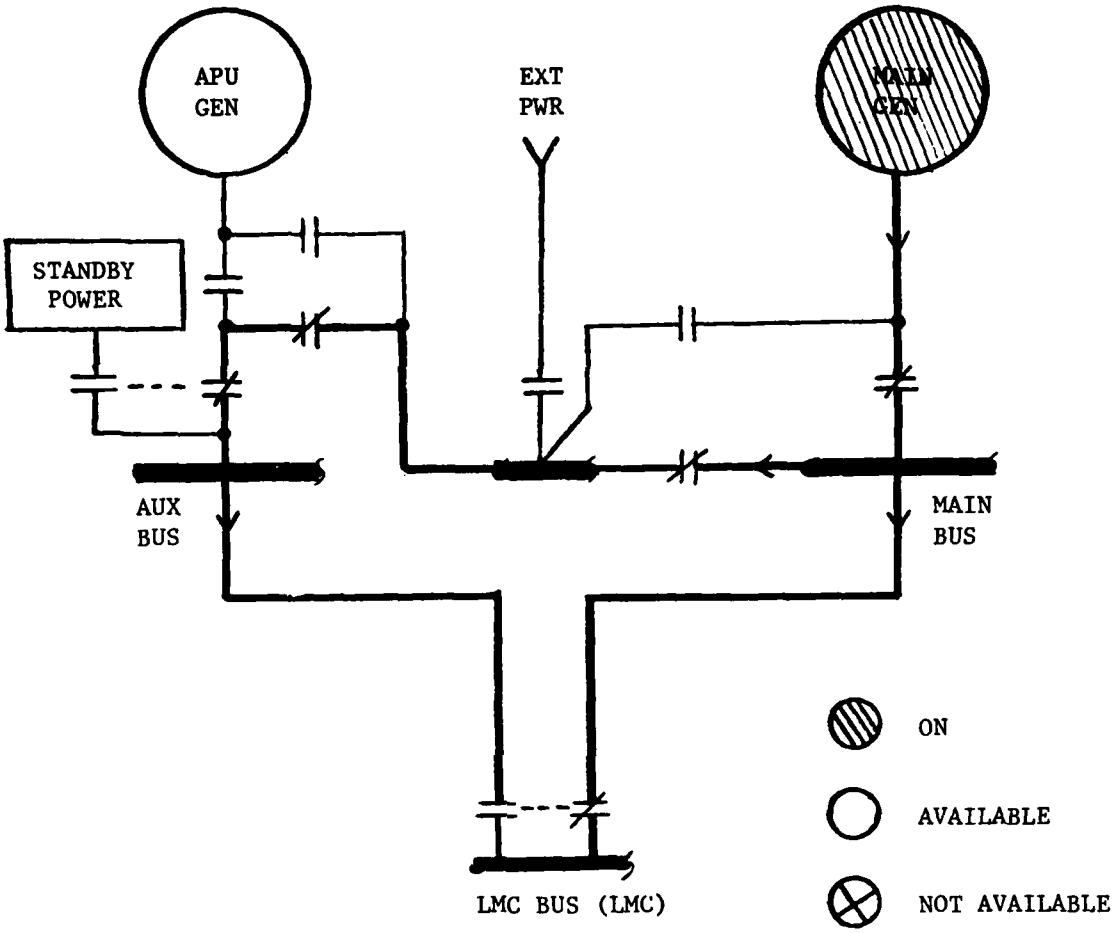

FIGURE 19C NORMAL FLIGHT

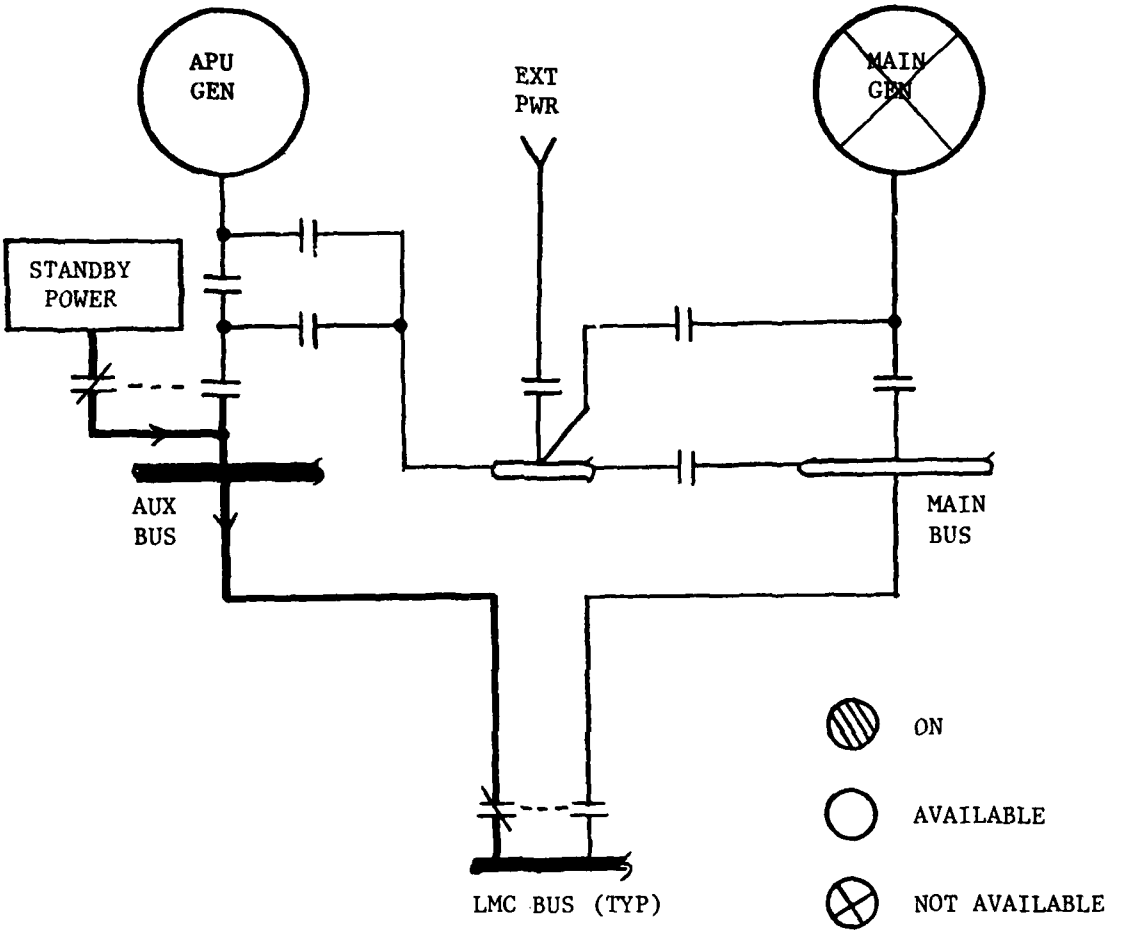

FIGURE 19D STANDBY POWER

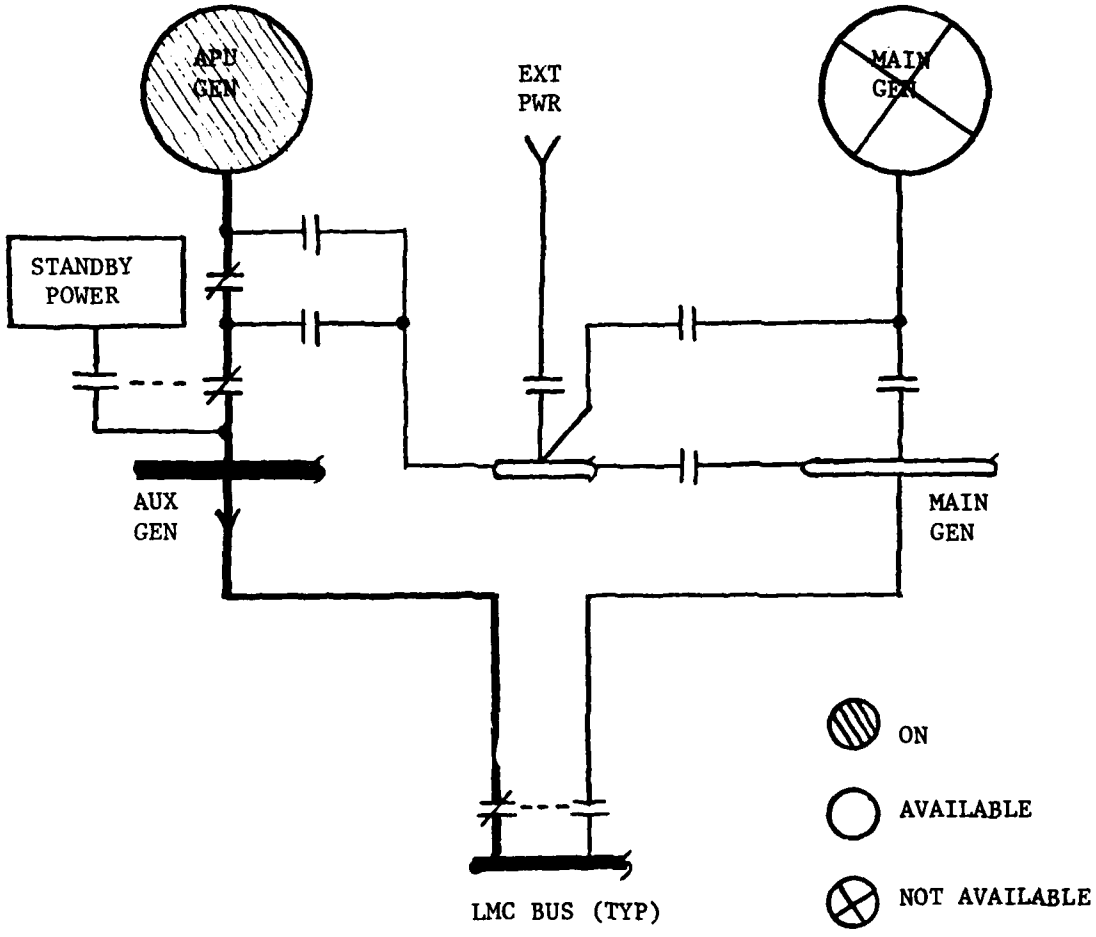

FIGURE 19E APU GENERATOR

Figure 19A represents power flow during ground operation from external power. The standby system (inverter) is available as a power source bus is de-energized. Likewise, the APU and main generators can be brought on line in a parallel synchronized operation if desired (providing APU and engine are operating).

Power flow during engine starting is illustrated in Figure 19B. In this mode, the limited set of utilization equipment required during starting is powered by the inverter while the APU (or external) power source energizes the starter mode of the main generator. After engine start and the main generator comes on line, the power flow is established as shown in Figure 19C. This flow is maintained for normal flight. The bus tie link is utilized during normal operation to minimize power interruption in the event of faults on one of the feeders between the main bus and a LMC. When this occurs, the LMC transfer function will select the auxiliary bus feeder.

In the event of loss of the main generator, the inverter will be connected to the auxiliary bus and hence to each LMC through the LMC transfer relay (see Figure 19D). At the same time, the EMUX system will switch into a load management mode and shed non-essential loads until the APU generator can be brought on line. It should be noted that start-up of the APU requires a source of power - electrical, hydraulic, pneumatic, etc. If the electrical power is used for APU start-up, it will likely require a battery separate from the battery which powers the inverter. As long as electrical power necessary for APU starting is limited to control functions (i.e., low power) the standby power source can be shared between essential equipment and APU starting. This study assumes the latter condition.

With the APU generator operating, power is routed to LMC buses as indicated in Figure 19E. An alternate path (not shown) to the LMC is through the bus tie link to the main bus and down the associated feeder to the LMC.

4.1.4 POWER DISTRIBUTION AND CONTROL

The Power Distribution System (PDS) controls the allocation of power from the remote LMCs to the utilization equipment. In addition to controlling and rationing (when required) the electrical power, the PDS provides self-protection against smoke, fire and shock hazards to limit damage from component failures, maintenance errors and battle damage. Various levels of control and protection can be established, but manned military aircraft are generally (if not always) designed such that all circuitry is fault protected and flight essential circuits are redundant. These design requirements are imposed for aircrew safety and to increase the probability of returning a vehicle which is more expensive than a missile or RPV for example.

Additionally, the protection function is typically implemented such that any fault in the distribution system will be limited to one circuit or system. This goal results in individual circuit protection devices dedicated to individual systems. Related to this design goal is the desire to be able to reset the fault clearing device in-flight in the event of a "nuissance trip" or an intermittent fault. Protective devices are located in the cockpit in conventional aircraft to enable manual resetting the circuit protectors. Single engine and especially single crewman vehicles have insufficient cockpit space to implement the reset capability, plus the increased weight of the distribution system detracts from its feasibility.

With the advent of electromechanical remote controlled circuit breakers, the feasibility of adding a reset capability improved but the weight of the control function is still difficult to justify for a severely space restricted aircraft. This is especially true when one considers that additional switching hardware for on/off control must be added.

Due to these issues (and others), it is apparent that an integrated approach to the control/protection function is desirable.

By installing a logic box which computes the control functions and reset logic, the RCCB could implement the on/off control as well as protection function. This approach reduces the power switching hardware (large components) to a minimum while implementing all logic manipulations at very low power levels (and hence small components).

When considering the hundreds of circuits/systems on a typical military aircraft, the number of inputs and outputs interfacing with the hypothetical "logic box" would be so large as to be unmanageable especially when one considers redundancy aspects. To alleviate the I/O handling problem, the I/O interface can be physically separated from the logic computation box and I/O data transmitted between the interface and logic units by a multiplexed data bus. In addition, the interface unit can be split into multiple units, each of which are installed in the vicinity of a group of I/O's being serviced. To provide redundancy at the logic calculation level, multiple logic processors can be connected to the data bus. This PDS implementation scheme is referred to as the Electrical Multiplex (EMUX) system.

The EMUX implemented system consists of signal sources (solid-state transducers), EMUX control and solid-state power controllers. This minimizes both the signal and power wire lengths needed to interconnect the system. The signal source provides input stimulus to a MUX/DEMUX terminal of the EMUX system in response to a mechanical movement (toggle switch action), pressure change, temperature change, etc. Signal adapters are used to convert "black box" signals for compatibility with the input requirements of the MUX/DEMUX terminal. The signal source configuration which offers certain advantages in terms of being all solid-state, not requiring supplemental power and providing a level of built-in-test is a "switched impedance" type shown in Figure 20. The output characteristics are defined in terms of impedance levels. A fixed impedance value is assigned for a NORMAL ON state and another value is given for a NORMAL OFF state. Fault modes exist when the impedance value is either above or below the normal values. To detect the impedance values, the MUX/DEMUX terminal provides a constant current (10 ma) to the impedance resulting in voltage levels across the input to the MUX/DEMUX unit which are proportional to the impedance levels.

Power switching between the power bus and the load is performed by solid-state load controllers. For a single engine aircraft, approximately 350 controllers are installed in five LMCs. The trip characteristics for ac power controllers are shown in Figure 21. Typical ac load controller distribution by current rating is given in Table 9.

The built-in-test technique described for the signal source is also included in the controller (Figure 20). This greatly enhances maintainability while minimizing the interconnect wiring needed between the multiplex/demultiplex terminals and controllers. Fault data is provided when the following conditions exist.

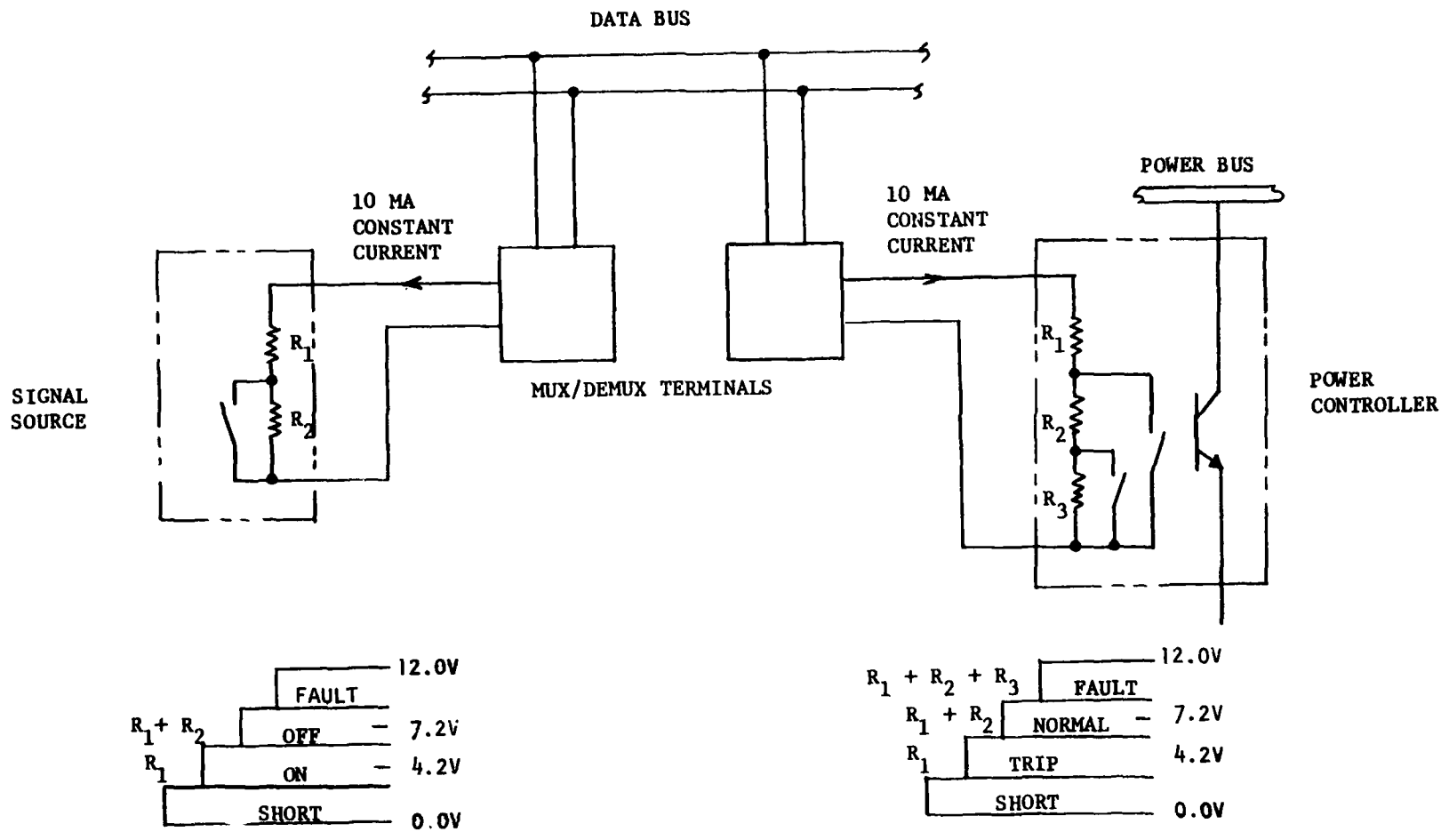

FIGURE 20 CONTROL SIGNAL INTERFACE - SINGLE ENGINE AIRCRAFT

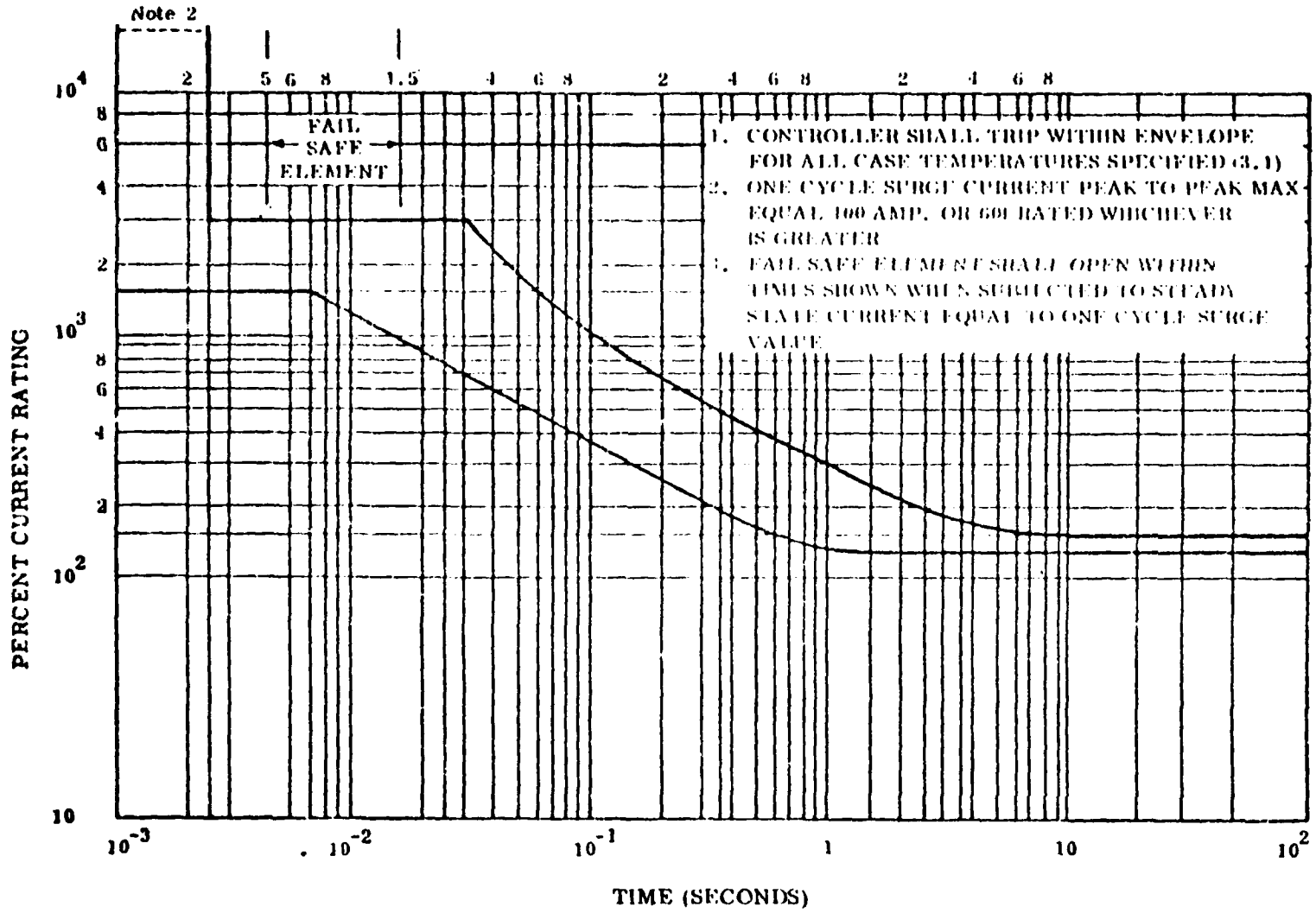

FIGURE 21 – TRIP CHARACTERISTICS FOR AC POWER CONTROLLERS

a. An ON command signal is present and no load current is present.

b. An OFF command signal is present and load current is upplied to the load.

TABLE 9

LOAD CONTROLLER QUANTITIES

DEVICE RATING (AMPS RMS)	NUMBER REQUIRED
0.5A	196
1 A	65
2.5A	50
5 A	21
10 A	18

This signifies a faulted controller and permits a fault sensing circuit internal to the controller to indicate:

a. An open load controller (power switch or fusible link).

b. An open circuit between the controller and load.

c. A dead bus.

d. A shorted controller.

e. A faulted control circuit (open or shorted).

All load controllers are installed within six LMCs. The allocation of device ratings among the six LMCs is shown in Table 10. In addition to the SSPC's, each center contains heatsinks, bus tie switch gear, mounting hardware, connectors, EMUX multiplex/demultiplex (Universal) terminals and an enclosure. The LMC is enclosed to protect against physical damage. The SSPC mounting structure also serves as the heatsink. The LMC is a critical area

TABLE 10

LOAD CONTROLLER ALLOCATION TO LMC

LMC LOCATION	CONTROLLER RATING (AC)					TOTAL
	1/2A	1A	2.5A	5A	10A	
Cockpit*	78	26	13	3	0	120
RH Electronics Bay	37	13	5	3	0	58
LH Electronics Bay	41	6	8	6	0	61
RH Wing Stations	10	6	9	0	9	34
LH Wing Stations	10	6	9	0	9	34
Aft Equipment Compartment	20	8	6	9	0	43
TOTALS	196	65	50	21	18	350

* Function of the type of display hardware incorporated in the cockpit.

(somewhat similar to that of the EMUX processor) because it is a focal point where a single "hit" or battle damage can result in significant loss of capability. From this viewpoint, the LMC is even more critical than the processor since it does not have the "complete and separate" level of redundancy. At the same time, it is burdened with the operational and implementation requirements of high heat dissipation and large quantities of signal-power interface points for the distribution and control of power to the many loads within the aircraft. These requirements dictate that the LMC hardware (load controllers, demultiplex terminals and the interconnect-wire system) be very small so that the LMC can be placed behind the avionic equipment. Although placing the LMC behind the utilization equipment is not an essential requirement, it is very desirable because of the survivability criteria. Consequently, the areas usually selected for the LMC's are typically very space limited. For this reason, it is a high priority requirement to minimize the size of the LMC equipment. However, the operational and implementation methods used for the load control and protection functions impose limits on the level of miniaturization that can be achieved. These reside primarily in: (1) The number of wire interfaces (signal and power), (2) the intelligence level of the individual controllers, and (3) the power dissipation per controller module combined with the electronic components needed in the controller to achieve its control functions.

The load requirements for the aircraft utilization equipment can vary considerably as a function of the aircraft mission and complexity. Table 11 depicts this range of power requirements. The top portion of the table represents a reasonable set of core systems required for most single engine military aircraft. This core load is approximately 10.3 KVA.

TABLE 11

UTILIZATION EQUIPMENT POWER REQUIREMENTS

CONFIGURATION	SYSTEM	LOAD (KVA)
BASIC CORE	Comm/Nav/Platform	2.15
	Stores Management	0.35
	Flight Control/Display	1.5
	Propulsion Control/Display	0.3
	Environmental	2.1
	Fuel Control	0.3
	Lighting	0.6
	Utilities	0.5
	Radar	2.5
	Subtotal	10.3
MISSION SENSITIVE	ECM	3.0 to 30.0
	Weapons	0.3 to 15.0
	Radar*	0.0 to 3.0
	Target Acquisition	0.0 to 8.4
	Subtotal	3.3 to 56.4
	TOTAL	13.6 to 66.7

* Addn. requirements above core system

The bottom half of Table 11 presents the range of loads expected for most single engine aircraft.

Since these loads vary with the aircraft's mission configuration, the total load requirements cover a broad range (i.e., 13.6 to 66.7 KVA) as the equipment mix varies. The ECM equipment complement can range from on-board jammer and Radar Homing Warning (RHAW) systems to external mounted (on wing pylons) jammer pods. Weapons mix can vary from dumb bombs to active guidance "smart" missiles. More sophisticated (or longer range) radars may be required to support more complex weapons. In addition, target acquisition systems such as infrared TV may be required. From a practical standpoint, simultaneous installation of the mission sensitive equipments at each maximum rating would not occur. For example, installation of the pylon mounted high power ECM jammers would reduce the number of weapons which could be carried and thus reduce the power requirements for weapons.

For purposes of PDS design, the mission sensitive equipment mix was assumed to be that shown in Table 12. This loading (39 KVA) results in reasonable growth capacity for the 60 KVA system rating. (Normal design goal for new aircraft is to size the generator system for approximately 150 percent of the initial design power requirements). It should be noted, however, that for purposes of the power system computer modeling, the PDS load is set near 60 KVA to represent a worst case generator loading. This worst case loading is more representative of an aircraft which has been in service for several years and has been retrofitted with new or additional systems.

In order for EMUX to compute conditions for control of the load controllers, input signals must be routed to the EMUX processor. These input commands are intercepted by EMUX remote terminals distributed throughout the aircraft or

TABLE 12

ASSUMED MISSION SENSITIVE LOAD MIX

(COMBAT 'CONTINUOUS' LOAD)

SYSTEM	LOAD (KVA)
Basic Core	10.3
ECM	15.6
o 1 jammer pod	
o Internal RHAW	
Weapons	4.7
o 6 IR Maverick missiles	
o 2 Sidewinders	
o 1 30 MM gun pod	
Target Acquisition	8.4
o Forward Looking IR	
TOTAL	39

enter the EMUX processor through an avionics multiplex interface such as DAIS. Based on early studies,[3,4] approximately two output signals (average) are generated by each input signal. This ratio is to some extent determined by the fact that three output signals are generated in order to energize a three phase load. This ratio yields approximately 175 inputs from manually activated signal sources, from black boxes, or from mechanical transducers.

Most of the manually activated signals originate from the cockpit through EMUX terminals, while the signals eminating from black boxes reach the EMUX processor through a DAIS (or similar) data bus interface. The mechanical transducers (pressure, temperature, etc.) are distributed throughout the aircraft and also enter EMUX at an EMUX remote terminal.

The EMUX system basically consists of hardware similar to that defined for the B-1 airplane. The main difference is the configuration of the multiplexer and demultiplexer terminals. An advanced design uses a common terminal to perform both the multiplex and demultiplex functions, i.e., a "universal terminal". In the universal terminal, any channel can be used for interfacing either a signal source or a power controller. EMUX as generally defined, uses separate terminals to perform the multiplex and demultiplex functions. The common configuration improves design flexibility and reduces logistic support requirements.

The processor, multiplex/demultiplex terminal and maintenance panel hardware and functions are briefly described in the following paragraphs for a single engine aircraft implementation. Also discussed are the Built-In-Test (BIT) capability and criteria or methods for powering-up the EMUX system.

4.1.4.1 PROCESSOR

Two processors are provided for redundancy, i.e., either processor controls the entire data handling process. One processor operates in stand-by (passively receiving data on the data bus and solving system control equations) and is automatically switched into operation upon failure of the operating unit. Each processor contains a nondestruct memory in which are stored all control instructions and the switching equations associated with the control of power to each individual load. The control instructions and equations are programmed into the processor through a software program. Thus, changes in control logic can be accomplished by reprogramming the processor with a paper or magnetic tape, thereby minimizing wiring changes which need to be made in the airplane upon incorporation of a modification. Parity check and monitor circuits within the processor provide a continuous BIT capability.

4.1.4.2 MULTIPLEX/DEMULTIPLEX TERMINALS

Typically eleven multiplex/demultiplex universal terminals are located throughout the airplane to collect control data, and to operate load controllers and special solid-state power switches (signal buffers). The multiplex/demultiplex terminal is internally redundant and can perform both the multiplex and demultiplex functions. Each terminal has a control capacity of 63 inputs or 63 outputs or combinations of 63 inputs and outputs plus one channel for BIT. The terminals are connected to the processor by a data bus transmission line. The data line is redundant, consisting of a twisted-shielded pair of wires, and operates in a half-duplex mode at a nominal one megabit rate. The data bus can also be implemented with fiber optics. The multiplex subsystem configuration/operation is in accordance with MIL-STD-1553.

4.1.4.3 EMUX MAINTENANCE PROVISIONS

Maintenance provisions on a large airplane will typically consist of CITS (Central Integration Test System). In absence of CITS, a maintenance panel might be provided; especially for a smaller, single engine airplane. The dedicated maintenance panel will typically consist of a printer and associated electronics to print BIT information required by maintenance personnel. A simplified maintenance panel provides inhibit-reset and input-output data display. All failures detected by the EMUX are recorded in the maintenance panel. Each failure is identified by LRU (Line Replaceable Unit) equipment, its location in the aircraft and time of failure. The quantity of data printed is a compromise between the quantity of data required by the maintenance personnel and the ability of the airborne unit to store and print the data in real time.

The displays on the panel consist of a lamp which is illuminated when a channel is inhibited and turned off when the inhibit is reset. A second lamp is provided for data display. Selecting a terminal and channel on the thumbwheel switches causes the lamp to be illuminated if the channel is ON (Logic 1). The lamp remains OFF if the channel is a Logic "O". A switch is included to test the two lamps. Two switches on the panel are associated with the printer control. The ON-OFF switch controls input power. A three position switch provides for tape advance and tape set.

4.1.4.4 BUILT-IN-TEST (BIT)

BIT is a significant capability, although it does not constitute a subsystem or even identifiable added equipment with the EMUX system. The area covered by

BIT includes all of the EMUX, the signal sources and the power controllers including the interconnecting wiring. An important factor contributing to the signal source and power controller BIT is the switched impedance control signal interface illustrated in Figure 20. The BIT includes both circuit functional checks and data monitoring. An example of a circuit test is the power supply voltage tolerance, i.e., an out of tolerance condition results in automatic switch-over to the redundant power supply circuit. Other basic test techniques used with the data handling system are command and response, parity, digital intergration and circulating test bit.

4.1.4.5 EMUX SYSTEM POWER-UP

All the EMUX system components (processors, multiplex/demultiplex terminals maintenance panel) are supplied power from the AC bus. The EMUX system is effectively "hardwired" to the bus and is powered automatically whenever the bus is powered. The primary processor is redundantly powered from AC buses located in separated LMCs to enhance reliability and invulnerability. Similarly, the secondary processor is powered from separate AC buses.

4.1.5 FLY-BY-WIRE SYSTEM

Critical electrical systems, such as fly-by-wire systems, can only be tailored after aircraft system performance characteristics have been defined. Additional levels of redundancy in the areas of power sources, feeders, power distribution circuits, sensory circuits and EMUX hardware to obtain additional levels of reliability and vulnerability must be designed into the basic system. A second engine driven generator may be required on a single engine aircraft. Zero power interruptions can only be accomplished in DC systems with batteries used as back-up power sources. Power interruptions in AC

systems can be reduced as discussed in paragraph 5.7 but never completely eliminated upon loss of the primary system.

4.2 MULTI-ENGINE AIRCRAFT

The multi-engine aircraft electric system is defined to consist of the following:

- Four main AC generating channels, each rated for 90 KVA. Each generator is controlled by a dedicated microprocessor implemented GCU and includes extensive self-test capability.
- Engine electric self-start capability.
- One APU driven generator rated for 90 KVA.
- Two static inverters, each rated for total "gapless power" load.
- Two batteries, each rated for total "gapless power" load. The battery powers loads through the static inverters.
- Nine LMCs for final distribution of power to utilization equipment. Each center is supplied three phase ac power from two of the four main power buses and from one of the two inverter buses.
- The inverter normally operates in a standby mode, synchronized to the main AC buses. Time required to switch to the "standby" or inverter bus is 20 milliseconds maximum.
- Control and protection of power flow to utilization equipment is provided by solid state load controllers.
- The load controllers are controlled by an EMUX system consisting of:
  - Four Processors
  - 32 Universal (Multiplex/Demultiplex) EMUX Terminals

- One Maintenance Panel (shared with other on-board maintenance systems)
- One EMUX Control Panel (cockpit)
- A Split Dual Data Bus System

o Control signals to EMUX utilize the "switched impedance" concept.

o The power generation system normally operates in a split bus mode with all channels isolated but synchronized.

o All power generating channels are capable of parallel operation.

o The EMUX system can sequentially remove individual loads as determined by an established load management priority.

A block diagram of the multi-engine power control system is shown in Figure 22. The power generation portion of this system consists essentially of four main 90 KVA power sources, one emergency (auxiliary) 90 KVA power source and two 5 KVA battery powered inverters interlocked through the bus management subsystem. The 5 KVA standby inverter system supplies power to essential or gapless power sensitive equipments during transition between power sources. In addition to the sources listed above, provisions for external power connection is available for ground maintenance and engine starting power. A 90 KVA rated generator was selected for the APU driven auxiliary power source for hardware commonality with the four main generators. This rating selection is also required to allow engine start from an APU electric power source. As in the single engine design, each generator system contains a dedicated Generator Control Unit (GCU) with an internal MIL-STD-1553 multiplex port for data communication with EMUX.

A power feeder network is implemented with Remote Controlled Circuit Breakers (RCCBs) to supply power to the nine LMCs. An EMUX link to these RCCBs permits monitoring of RCCB status and automatic reset on RCCB tripout.

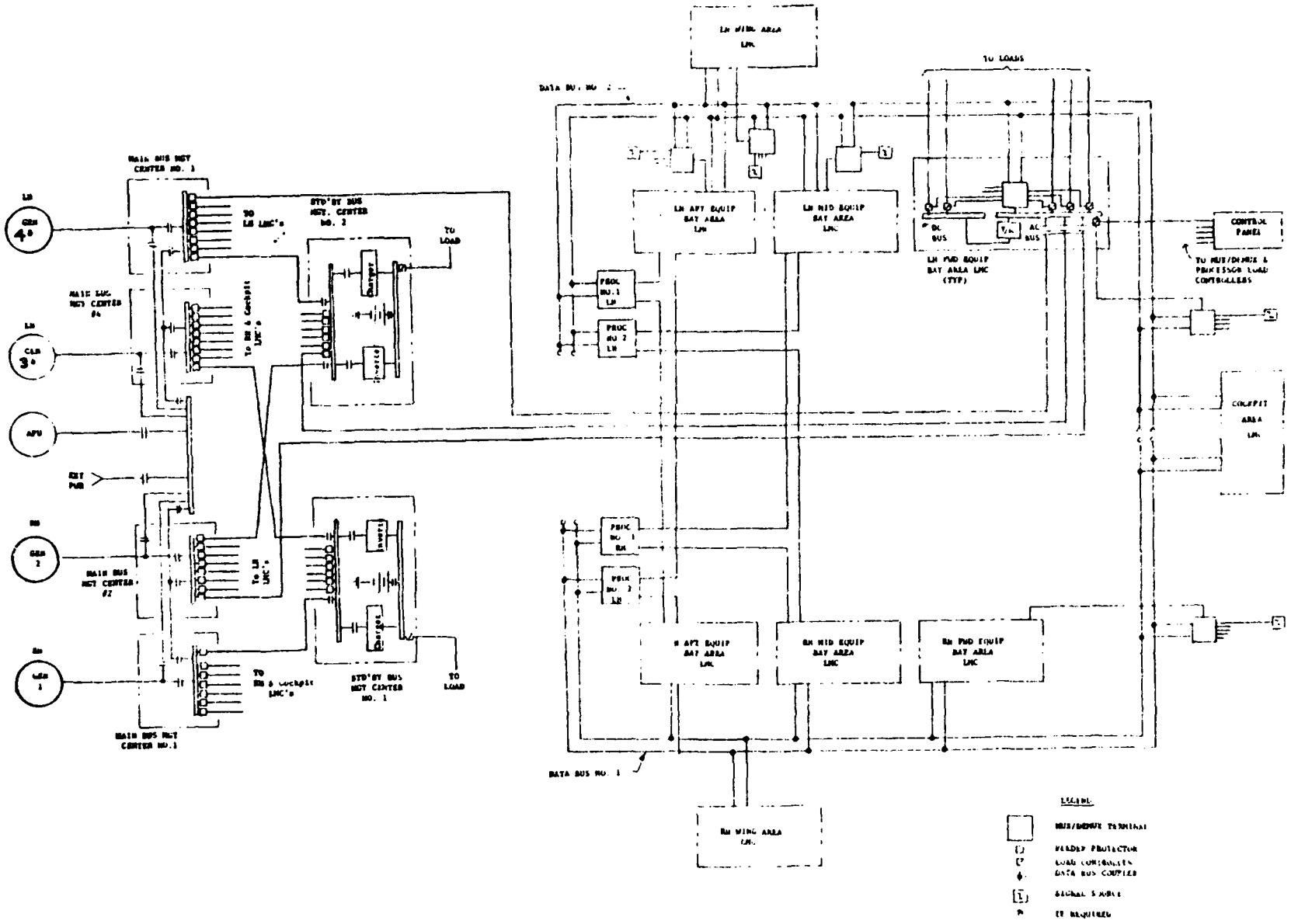

FIGURE 22 ADVANCED TECHNOLOGY ELECTRIC CONTROL SYSTEM MULTI-ENGINE AIRCRAFT

Each of the nine LMCs are connected to three power buses (two main buses and one inverter or standby bus). All load controllers within a specific LMC are connected to a common three phase ac bus. By connecting all load controllers to the common LMC bus, EMUX can establish power priority to equipments.

Trade studies for many of system design details selected are presented in Section V of this report. The paragraphs which follow expand the discussion for each of the major power system functions.

4.2.1 POWER GENERATION SYSTEM

The power generation system discussion will include the main AC system, the auxiliary AC system and the standby system.

Main AC System

The primary AC system consists of four advanced tehnology power generating channels (cycloconverter VSCF or IDG) which may be operated either isolated, split parallel or full parallel. Synchronism between all four channels is automatically maintained in all operating modes whether isolated or parallel, consequently, no beat frequencies are present. System logic control is performed with microprocessors contained within each GCU. The GCU logic control provides the following capability:

- Each generator automatically comes on the line following engine start.
- Automatic load bus transfer upon a generator failure.
- Automtic lockout of faulted bus.
- Automatic lockout if output power is out of specified limits.

- Automatic protection for underspeed, under/over voltage, under/over frequency, out of synchronization, overcurrent, DC current, waveform distortion and zero sequence voltage.

An interface to the EMUX system is provided for obtaining data to improve operation (automatic load shedding) and maintenance, similar to that discussed for the single engine system. Additionally, integrated control techniques are employed through use of microprocessor implemented GCU and EMUX for providing generator and bus control functions.

The data in Table 13 summarizes the characteristics of each of the four main generators and the APU generator.

Standby Power System

Each of the two "standby" power systems are implemented with a static inverter, nickel-cadmium battery, battery charger, standby control unit and bus controller to supply AC power to flight critical equipment sensitive to power interruptions. Tables 2 and 3 list the characteristics of the inverters and batteries.

The standby bus controller is driven by the Standby Control Unit (SCU). The SCU design ensures that power interruptions on the standby bus do not exceed 20 milliseconds. Figure 23 illustrates a representative implementation for the standby power module.

Contactors K1 and K2 are controlled by the SCU as a function of voltage characteristics of sources A and B. These relays can also be controlled via EMUX commands to permit aircrew override of automatic operation. The battery

TABLE 13

MAIN GENERATOR CHARACTERISTICS

Technology Type	IDG	VSCF
System Rating - Per Channel (KVA)	90	90
Voltage at Point of Regulation (VAC)	115/200	115/200
Rated Current - Continuous (Amps/Phase)	260	260
Overload Rating (Amps/Phase)		
5 Minutes	390	390
2 Minutes	442	-
5 Seconds	455	520
Short Circuit - 5 Seconds - Current Limit (Amps/Phase)	455	520
Voltage Resolution (Volts)	115 ± 1	115 ± 1
Voltage Transients	See Figure 4	
Voltage Waveform		
Crest Factor	$1.41 \pm .07$	$1.41 \pm .07$
Distortion (%)	2	4
DC Content (Volts)	0	.05
Frequency Regulation (%)	± 1.0	± 0.1
Frequency Transients (Hz)	± 20	0
Phase Displacement - Balanced Loads	$120^\circ \pm 3.5^\circ$	$120^\circ \pm 2.5^\circ$
System Weight (Lbs) (Cooling not included)	117	165
Speed Range (rpm)	12,000-24,000	22,000-27,000
System Efficiency (%)		
24,000 rpm	78	83
18,000 rpm	81	84
12,000 rpm	80	85

AD-A099 894 VOUGHT CORP DALLAS TX F/G 10/2

POWER SYSTEM CONTROL STUDY. PHASE I. INTEGRATED CONTROL TECHNIQ--ETC(U)

MAR 81 D E LAUTNER, A J MAREK, J R PERKINS F33615-78-C-2018

UNCLASSIFIED AFWAL-TR-80-2129 NL

2 of 5

AD
A099894

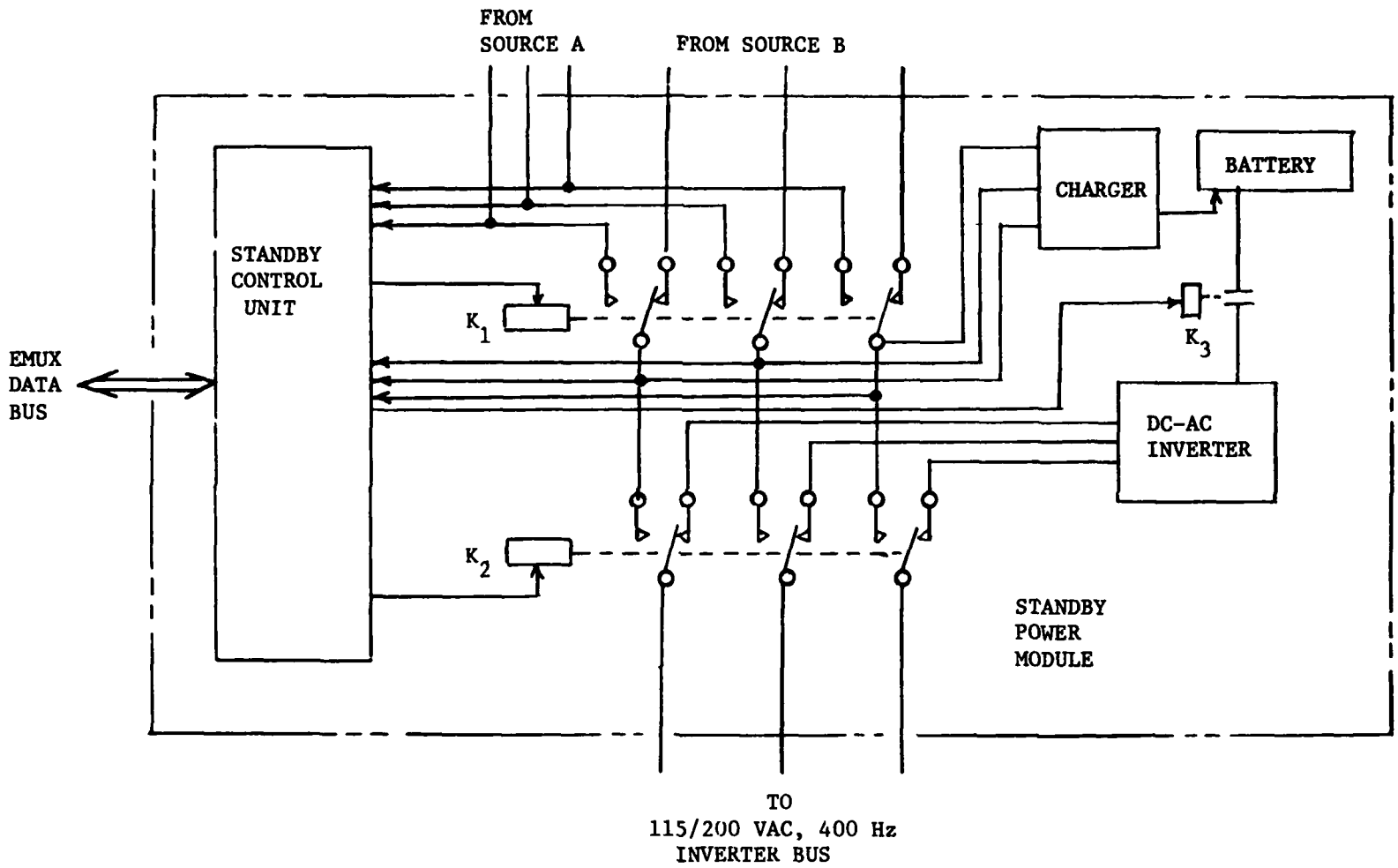

FIGURE 23 STANDBY POWER BUS CENTER

contactor K3 is implemented with a hybrid contactor concept. By using a hybrid contactor, the operate time can be accelerated sufficiently so that the battery does not need to be continuously connected to the inverter in order to meet the 20 millisecond no power gap goal.

This standby power module has one operational difference from the unit used in the single engine design. Since this module receives main AC power from two sources, a double power gap will occur during transfer from source "A" to source "B". During normal operation, the standby bus will be energized from source "A" through closed contactors K1 and K2. If power is lost on source "A", contactor K3 will close and K2 will open such that the standby bus will be energized by the inverter. During the same transition period, contactor K1 will be returning to its "normally closed" position for connection of source "B" to the open contacts of K2 relay. If the SCU immediately reactivates K2 relay a 15 millisecond power gap will occur on the standby bus followed within a few milliseconds by another power gap of approximately 2 milliseconds. By delaying the K2 reactivation signal from the SCU for a couple of seconds, utilization equipment will have sufficient time to have recovered from the first 15 millisecond gap. However, even without the SCU delay, the total power gap will be less than 20 milliseconds but will be spread over a period greater than 20 milliseconds.

Auxiliary Power System

An auxiliary power unit supplies sufficient electrical power to operate all ground and flight-essential loads. In addition, the APU generator rating is sufficient to supply engine starting power. In the interest of minimizing logistics cost, the generator system selected for the main AC system is also installed on the APU. This selection supplies sufficient power to energize

the main starter/generators and more than sufficient power for maintenance and flight critical loads.

4.2.2 POWER BUS MANAGEMENT

The power bus management system routes power from the four main power centers, the starter bus and the two inverter buses to nine power distribution centers located in various aircraft areas. In addition, the bus management system supplies a bus tie function for interconnecting buses and/or generators during fault conditions or for parallel generator operation.

Figure 24 depicts the bus interconnection scheme as well as contactors, feeders and feeder protectors. Each device in the figure has a 4 to 6 character designator which correlates to hardware characteristics listed in Table 14 through 16. Table 14 depicts contactor characteristics while Table 15 itemizes RCCBs.

Finally, feeder impedance data is defined in Table 16. These impedance values are based on allocating the 90 KVA per channel power to the various load management (power distribution) centers. The impedance data tabulated is inserted into the following matrix to define voltage/current relationships for the feeders:

$$\underbrace{\begin{bmatrix} V_a - V_a' \\ V_b - V_b' \\ V_c - V_c' \end{bmatrix}}_{\text{Feeder voltage drop}} = \underbrace{\begin{bmatrix} R_s+j\omega L_s) & (R_a+j\omega M_n) & (R_m+j\omega M_n) \\ R_n+j\omega M_n) & (R_s+j\omega L_s) & (R_n+j\omega M_n) \\ R_n+j\omega M_n) & (R_n+j\omega M_n) & (R_s+j\omega L_s) \end{bmatrix}}_{R_s,\ L_s,\ R_n \text{ and } M_n \text{ values defined in Table 16}} \times \underbrace{\begin{bmatrix} I_a \\ I_b \\ I_c \end{bmatrix}}_{\text{Feeder current}}$$

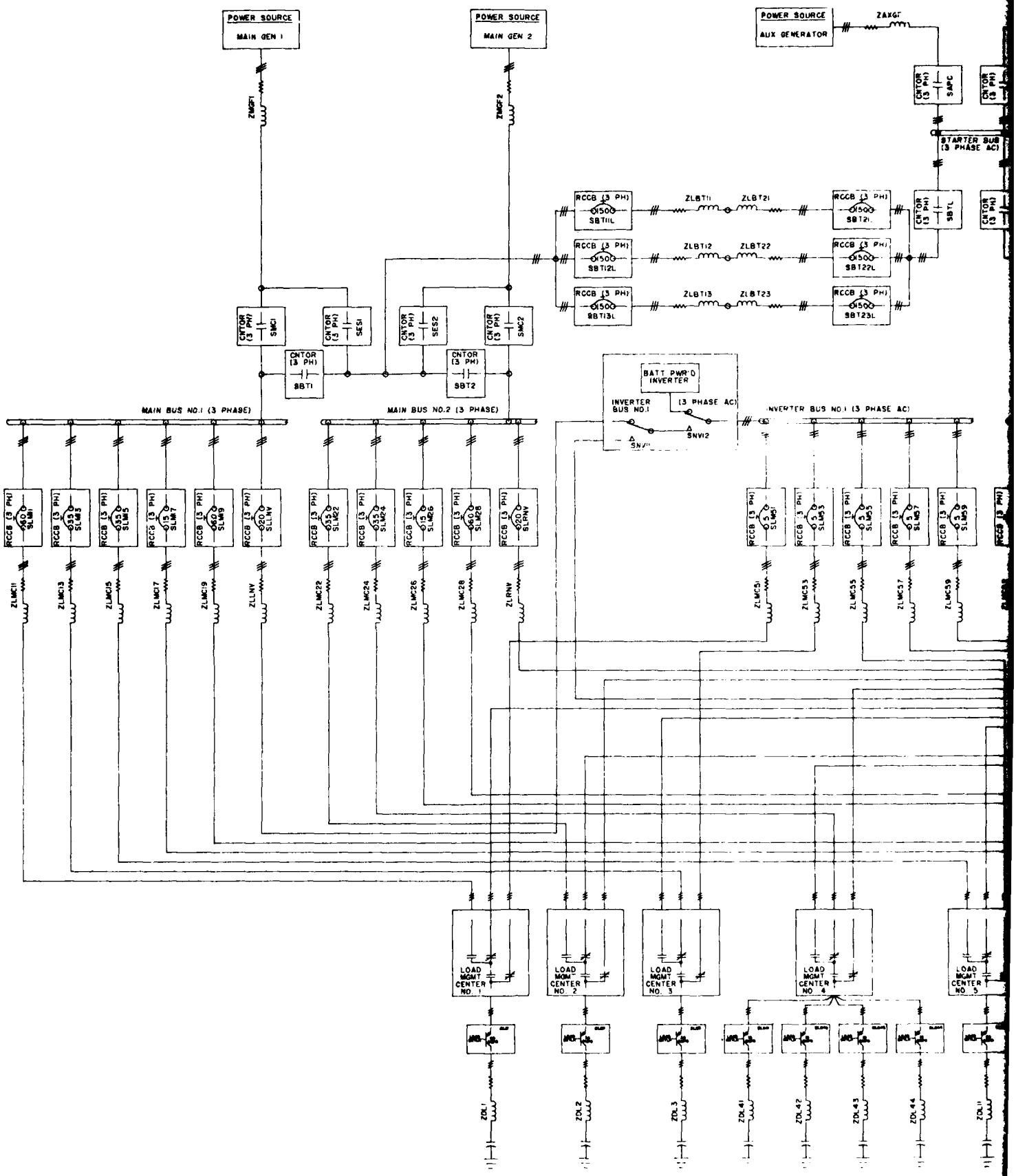
POWER SOURCE
MAIN GEN 1
POWER SOURCE
MAIN GEN 2
POWER SOURCE
AUX GENERATOR
ZAXGT
ZMGF1
ZMGF2
CNTOR (3 PH)
SAPC
STARTER BUS (3 PHASE AC)
RCCB (3 PH)
SBTIIL
SBTI2L
SBTI3L
SBT21L
SBT22L
SBT23L
ZLBTI1
ZLBTI2
ZLBTI3
ZLBT21
ZLBT22
ZLBT23
SBTL
SMC1
SES1
SES2
SMC2
SBT1
SBT2
BATT PWR'D INVERTER
INVERTER BUS NO.1
(3 PHASE AC)
SNVI2
MAIN BUS NO.1 (3 PHASE)
MAIN BUS NO.2 (3 PHASE)
INVERTER BUS NO.1 (3 PHASE AC)
SLMI1
SLMI3
SLMI5
SLMI7
SLMI9
SLLNV
SLMI2
SLMI4
SLMI6
SLMI8
SLRNV
SLMI51
SLMI53
SLMI55
SLMI57
SLMI59
ZLMCI1
ZLMCI3
ZLMCI5
ZLMCI7
ZLMCI9
ZLLNV
ZLMCI22
ZLMCI24
ZLMCI26
ZLMCI28
ZLRNV
ZLMCI51
ZLMCI53
ZLMCI55
ZLMCI57
ZLMCI59
LOAD MGMT CENTER NO. 1
LOAD MGMT CENTER NO. 2
LOAD MGMT CENTER NO. 3
LOAD MGMT CENTER NO. 4
LOAD MGMT CENTER NO. 5
ZDL1
ZDL2
ZDL3
ZDL41
ZDL42
ZDL43
ZDL44
ZDL11

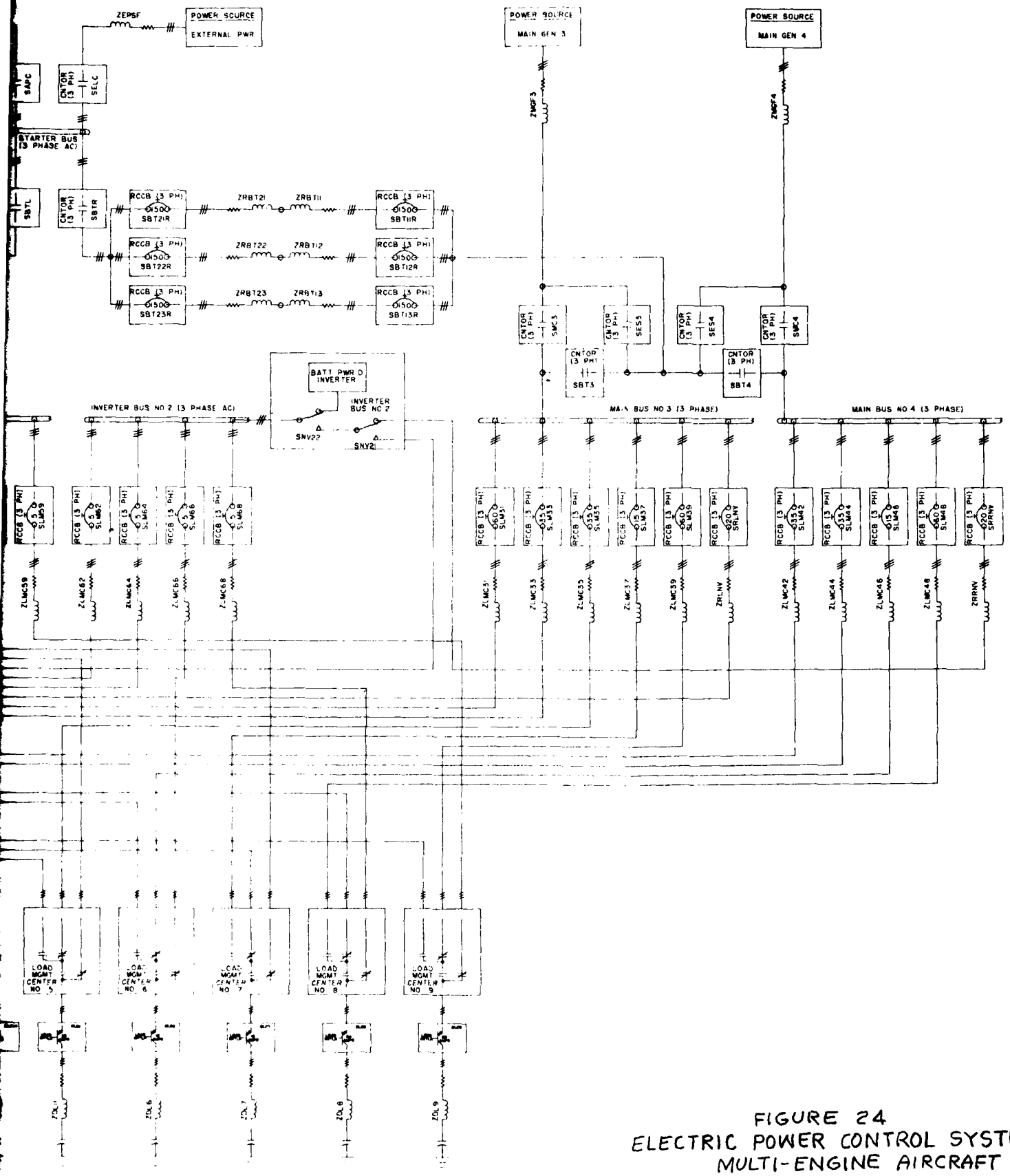

FIGURE 24
ELECTRIC POWER CONTROL SYSTEM
MULTI-ENGINE AIRCRAFT

TABLE 14

BUS MANAGEMENT CONTACTORS

DEVICE FUNCTION	CHARACTERISTICS
Main Generator #1 Line Contactor (SMC1)	115/200 VAC, 300 Amps
Main Generator #2 Line Contactor (SMC2)	115/200 VAC, 300 Amps
Main Generator #3 Line Contactor (SMC3)	115/200 VAC, 300 Amps
Main Generator #4 Line Contactor (SMC4)	115/200 VAC, 300 Amps
Engine #1 Starting Contactor (SES1)	115/200 VAC, 500 Amps
Engine #2 Starting Contactor (SES2)	115/200 VAC, 500 Amps
Engine #3 Starting Contactor (SES3)	115/200 VAC, 500 Amps
Engine #4 Starting Contactor (SES4)	115/200 VAC, 500 Amps
Generator #1 Bus Tie Contactor (SBT1)	115/200 VAC, 300 Amps
Generator #2 Bus Tie Contactor (SBT2)	115/200 VAC, 300 Amps
Generator #3 Bus Tie Contactor (SBT3)	115/200 VAC, 300 Amps
Generator #4 Bus Tie Contactor (SBT4)	115/200 VAC, 300 Amps
Left Starter Bus Tie Contactor (SBTL)	115/200 VAC, 500 Amps
Right Starter Bus Tie Contactor (SBTR)	115/200 VAC, 500 Amps
Auxiliary Generator Line Contactor (SAPC)	115/200 VAC, 500 Amps
External Power Line Contactor (SEPC)	115/200 VAC, 500 Amps

TABLE 15

BUS MANAGEMENT FEEDER PROTECTORS

DEVICE FUNCTION	CHARACTERISTICS (MIL-C-83383) (3 Phase)
Main Bus X to LMC #1 (SLM11, SLM31)	115/200 VAC, 60 Amps
Main Bus X to LMC #2 (SLM22, SLM42)	115/200 VAC, 35 Amps
Main Bus X to LMC #3 (SLM13, SLM33)	115/200 VAC, 35 Amps
Main Bus X to LMC #4 (SLM24, SLM44)	115/200 VAC, 35 Amps
Main Bus X to LMC #5 (SLM15, SLM35)	115/200 VAC, 35 Amps
Main Bus X to LMC #6 (SLM26, SLM46)	115/200 VAC, 15 Amps
Main Bus X to LMC #7 (SLM17, SLM37)	115/200 VAC, 15 Amps
Main Bus X to LMC #8 (SLM28, SLM48)	115/200 VAC, 60 Amps
Main Bus X to LMC #9 (SLM19, SLM39)	115/200 VAC, 60 Amps
Main Bus X to Inverter Bus (SLLNV, SLRNV)	115/200 VAC, 20 Amps
Main Bus X to Inverter Bus (SRLNV, SRRNV)	115/200 VAC, 20 Amps
Inverter Bus X to LMC #1 (SLM51)	115/200 VAC, 5 Amps
Inverter Bus X to LMC #2 (SLM62)	115/200 VAC, 5 Amps
Inverter Bus X to LMC #3 (SLM53)	115/200 VAC, 5 Amps
Inverter Bus X to LMC #4 (SLM64)	115/200 VAC, 5 Amps
Inverter Bus X to LMC #5 (SLM55)	115/200 VAC, 5 Amps
Inverter Bus X to LMC #6 (SLM66)	115/200 VAC, 5 Amps
Inverter Bus X to LMC #7 (SLM57)	115/200 VAC, 5 Amps
Inverter Bus X to LMC #8 (SLM68)	115/200 VAC, 5 Amps
Inverter Bus X to LMC #9 (SLM59)	115/200 VAC, 5 Amps
Bus Tie Feeder Protectors (SBT11L, SBT12L, SBT13L, SBT21L, SBT22L, SBT23L, SBT11R, SBT12R, SBT13R, SBT21R, SBT22R, SBT23R)	115/200 VAC, 150 Amps

TABLE 16

FEEDER IMPEDANCE COMPONENTS

VARIABLE NAME	R_s (OHMS x 10^{-3})	L_s (HENRIES x 10^{-6})	R_n (OHMS x 10^{-3})	M_n (HENRIES x 10^{-6})
ZMGF1	7.40	4.18	1.50	2.98
ZMGF2	5.45	2.25	0.77	1.66
ZMGF3	7.40	4.18	1.50	2.98
ZMGF4	5.45	2.25	0.77	1.66
ZAXGF	5.54	1.17	0.727	0.867
ZEPSF	5.45	2.25	0.77	1.66
ZLBT11 and 12	5.57	3.25	1.16	2.37
ZLBT21 and 22	5.57	3.25	1.16	2.37
ZLBT31 and 32	5.57	3.25	1.16	2.37
ZRBT11 and 12	5.57	3.25	1.16	2.37
ZRBT21 and 22	5.57	3.25	1.16	2.37
ZRBT31 and 32	5.57	3.25	1.16	2.37
ZLLNV	27.1	2.73	11.2	2.36
ZLRNV	54.2	5.46	22.4	4.72
ZRRNV	27.1	2.73	11.2	2.36
ZRLNV	54.2	5.46	22.4	4.72
ZLMC11	15.1	7.37	1.90	4.73
ZLMC13	34.9	8.34	1.90	5.62
ZLMC15	38.9	8.19	1.27	6.23
ZLMC17	77.7	11.85	2.53	7.92
ZLMC19	22.3	4.64	5.87	3.28
ZLMC22	29.1	6.92	1.58	4.65
ZLMC24	29.2	4.44	0.95	2.97
ZLMC26	68.0	10.37	2.22	6.93
ZLMC28	23.5	3.71	1.52	2.57
ZLMC31	15.1	7.37	1.90	4.73
ZLMC33	29.1	6.92	1.52	4.65
ZLMC35	29.2	4.44	0.95	2.97
ZLMC37	68.0	10.37	2.22	6.93
ZLMC39	23.5	3.71	1.52	2.57
ZLMC42	34.9	8.34	1.90	5.62
ZLMC44	38.9	8.19	1.27	6.23
ZLMC46	77.7	11.85	2.53	7.92
ZLMC48	22.3	4.64	5.87	3.28
ZLMC51	122.0	13.1	2.13	8.94
ZLMC53	193.0	13.7	2.13	9.29
ZLMC55	97.4	5.21	0.80	3.48
ZLMC57	168.0	12.0	1.87	7.76
ZLMC59	153.0	15.0	3.17	10.2
ZLMC62	193.0	13.7	2.13	9.29
ZLMC64	97.4	5.21	0.80	3.48
ZLMC66	168.0	12.0	1.87	7.76
ZLMC68	153.0	15.0	3.17	10.2

The impedance values were calculated in the same manner as for the single engine system. These values are based on the nominal allocation of power to each LMC as shown in Table 17 and the voltage drop allocations of Figure 7.

Bus Operation

Figures 25A through 25J illustrate power flow from sources to typical LMCs for various operating modes.

Figure 25A depicts aircraft power-up from the APU (or external power sources). The APU generator energizes the start bus. From the start bus, power is routed through bus tie contactors and RCCBs to each of the main power buses and from there to the LMCs.

During engine starting (Figure 25B), the bus tie contactors are opened and LMCs are powered by the standby buses (inverters). The APU generator then supplies power to the starter/generator associated with engine to be started. Since the LMCs are supplied power from the inverters, the power to loads is not distorted by starting transients on the starter bus.

After start-up of the first engine, the LMCs can be powered from the engine generator while the APU starts up the remaining engines (see Figures 25C and 25D). This permits continuation of isolation between the LMC power source and the source used for engine starting.

Once all engines have been started, the power source connections shown in Figure 25E apply. In this mode, the aircraft load is divided between generators 1 and 4. The other generators are operating in standby and not connected to the associated main buses. The APU is not operating. This mode applies to normal flight conditions.

TABLE 17

LOAD MANAGEMENT CENTER RATINGS

LOAD MANAGEMENT CENTER		3 PHASE RATING
NO.	LOCATION	(VA)
1	Cockpit/Nose	17250
2	LH Fwd Electronics Bay	8700
3	RH Fwd Electronics Bay	8700
4	LH Mid Electronics Bay	8700
5	RH Mid Electronics Bay	8700
6	LH Aft Electronics Bay	3450
7	RH Aft Electronics Bay	3450
8	LH Weapon Stations	15525
9	RH Weapon Stations	15525
	TOTAL	90000

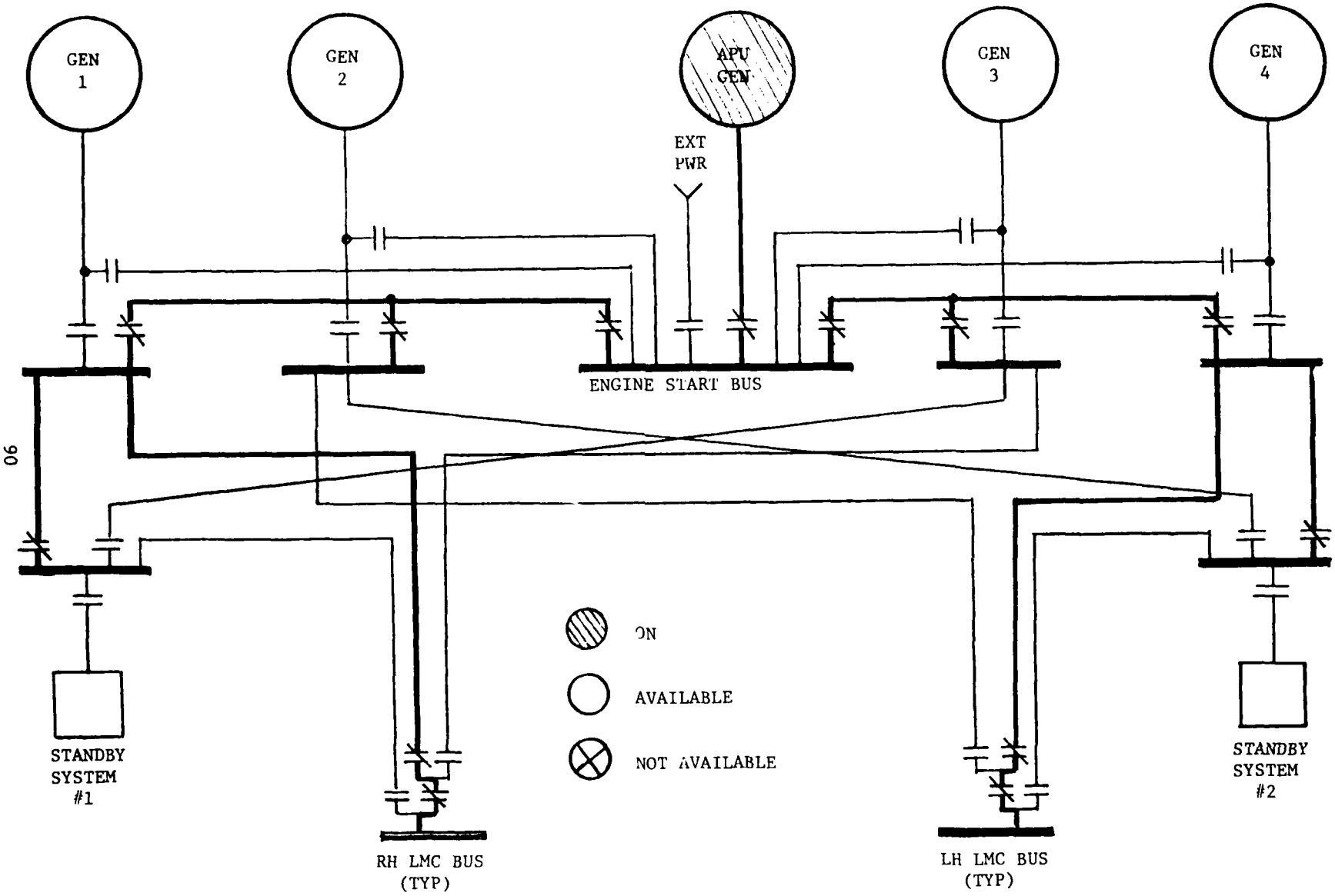

FIGURE 25A GROUND OPERATION (APU OR EXT PWR)

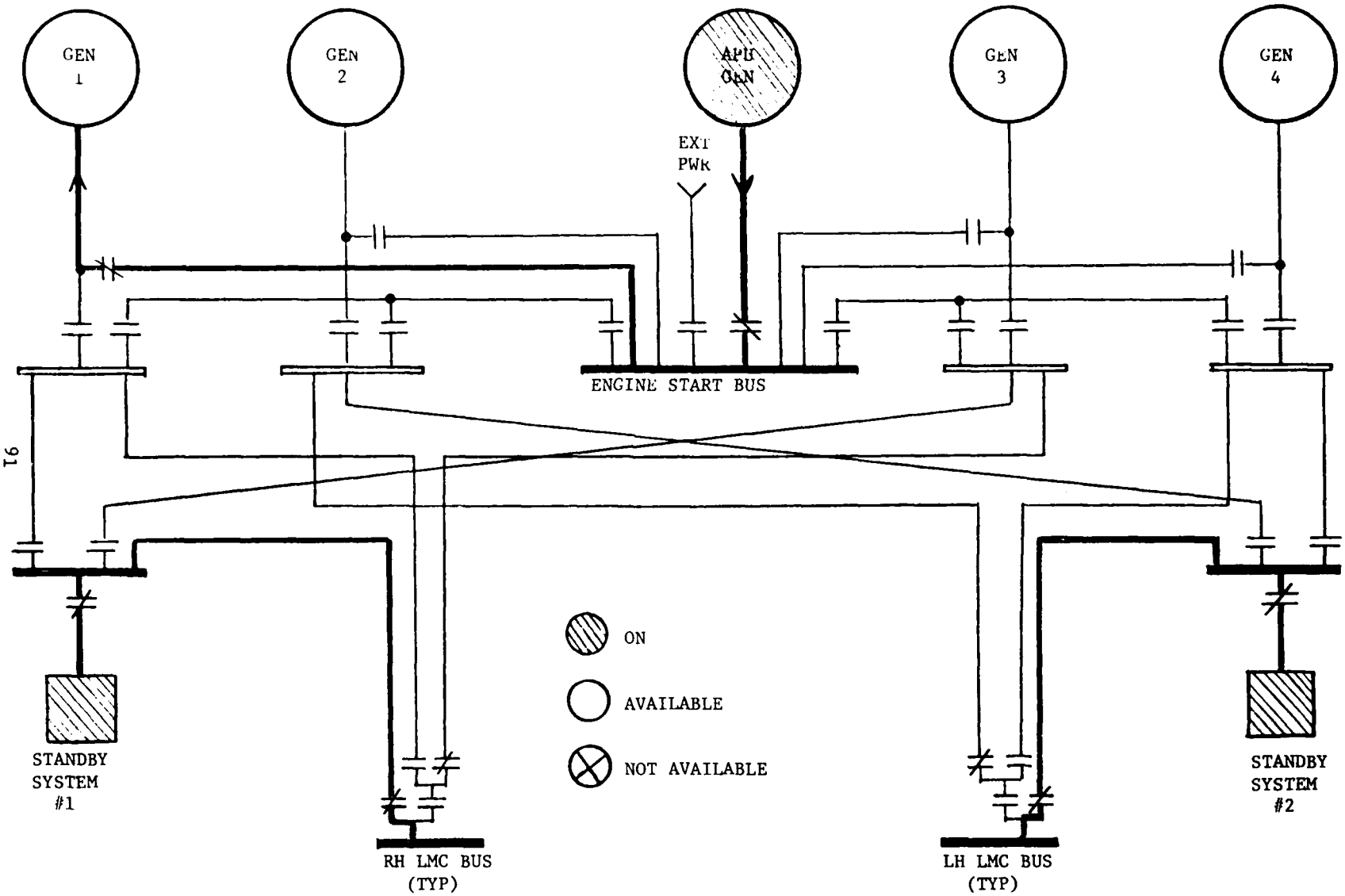

FIGURE 25B ENGINE NO. 1 START (FIRST ENGINE)

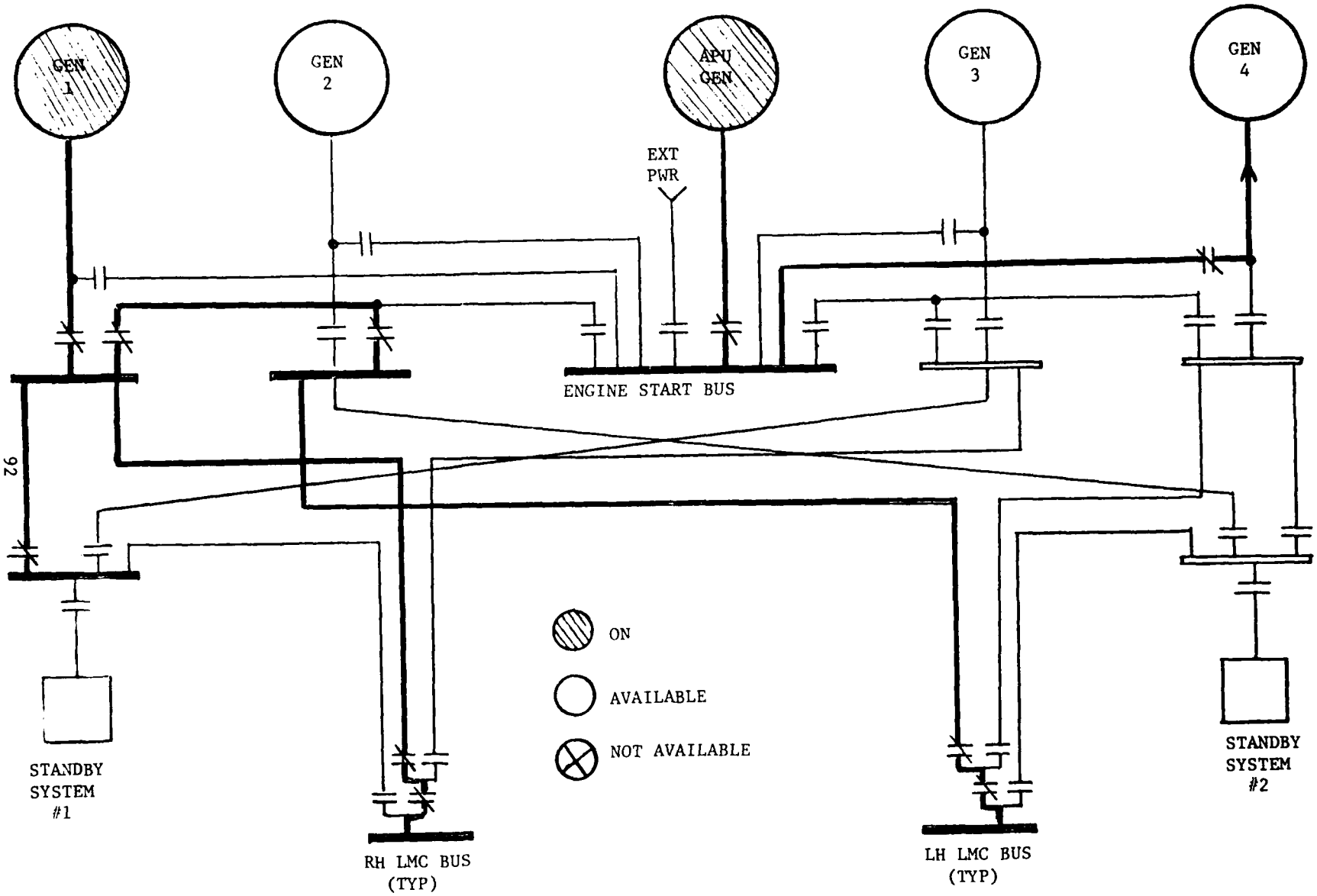

FIGURE 25C ENGINE NO. 4 START (SECOND ENGINE)

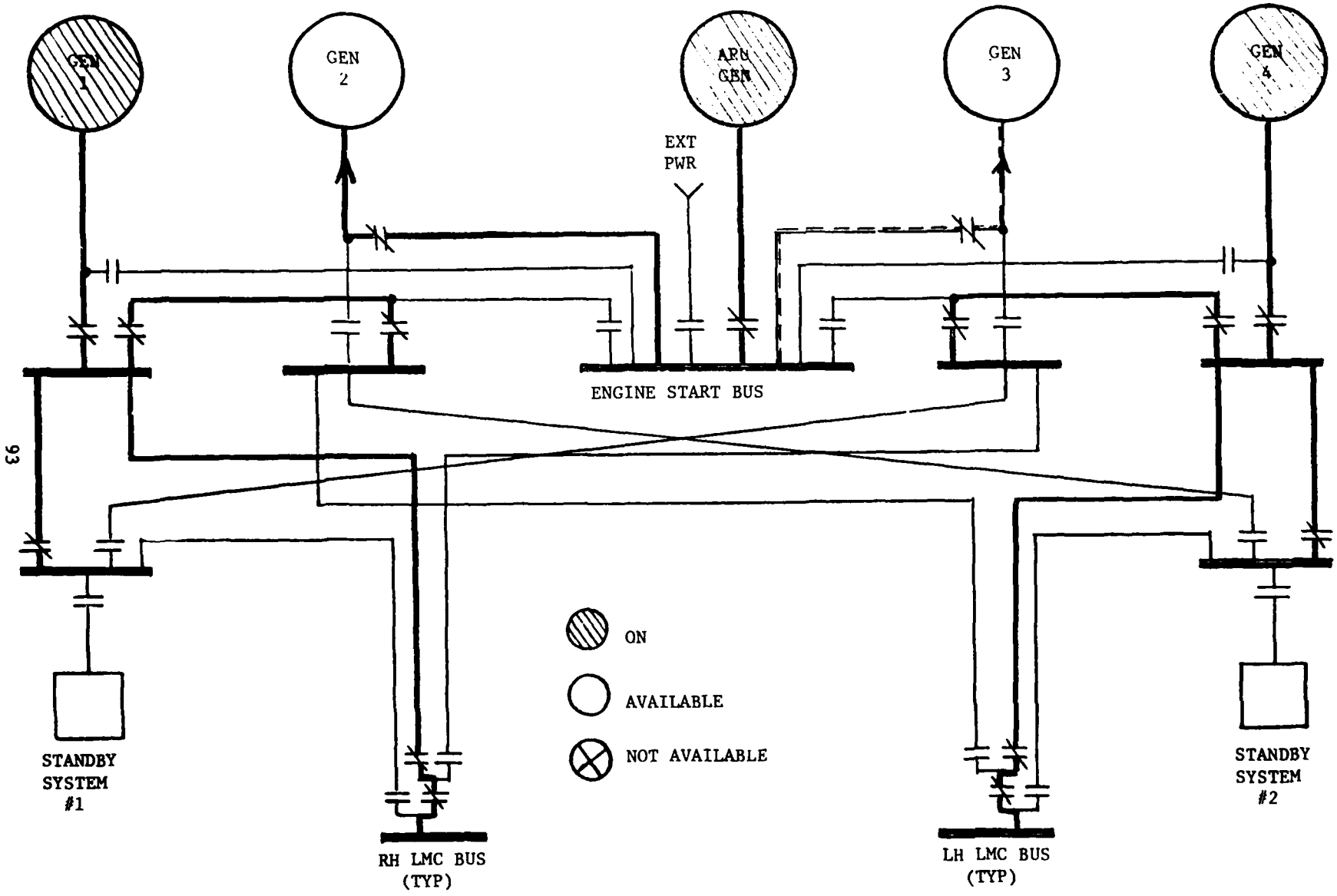

FIGURE 25D NO. 2 & NO. 3 ENGINE START

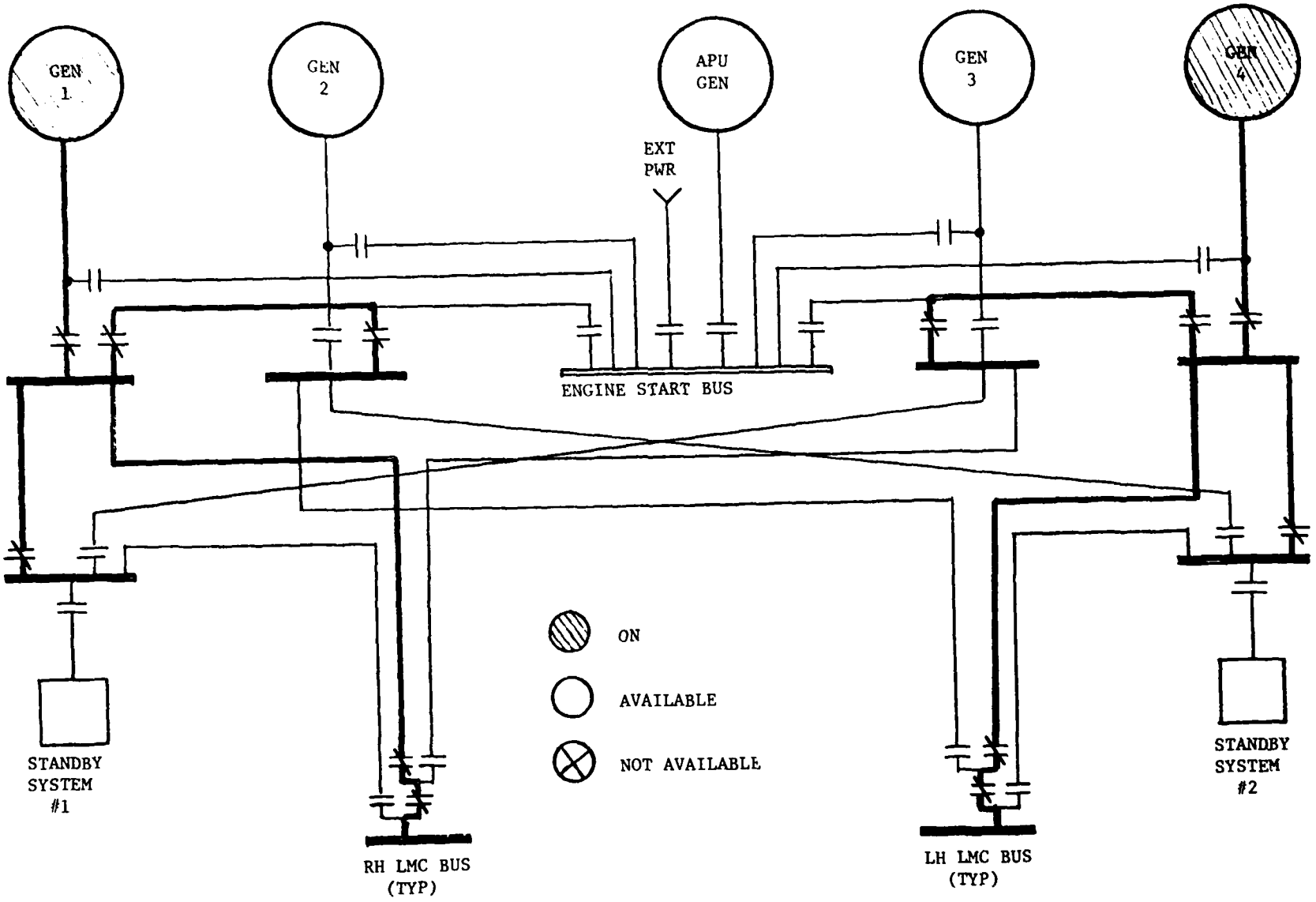

FIGURE 25E NORMAL FLIGHT

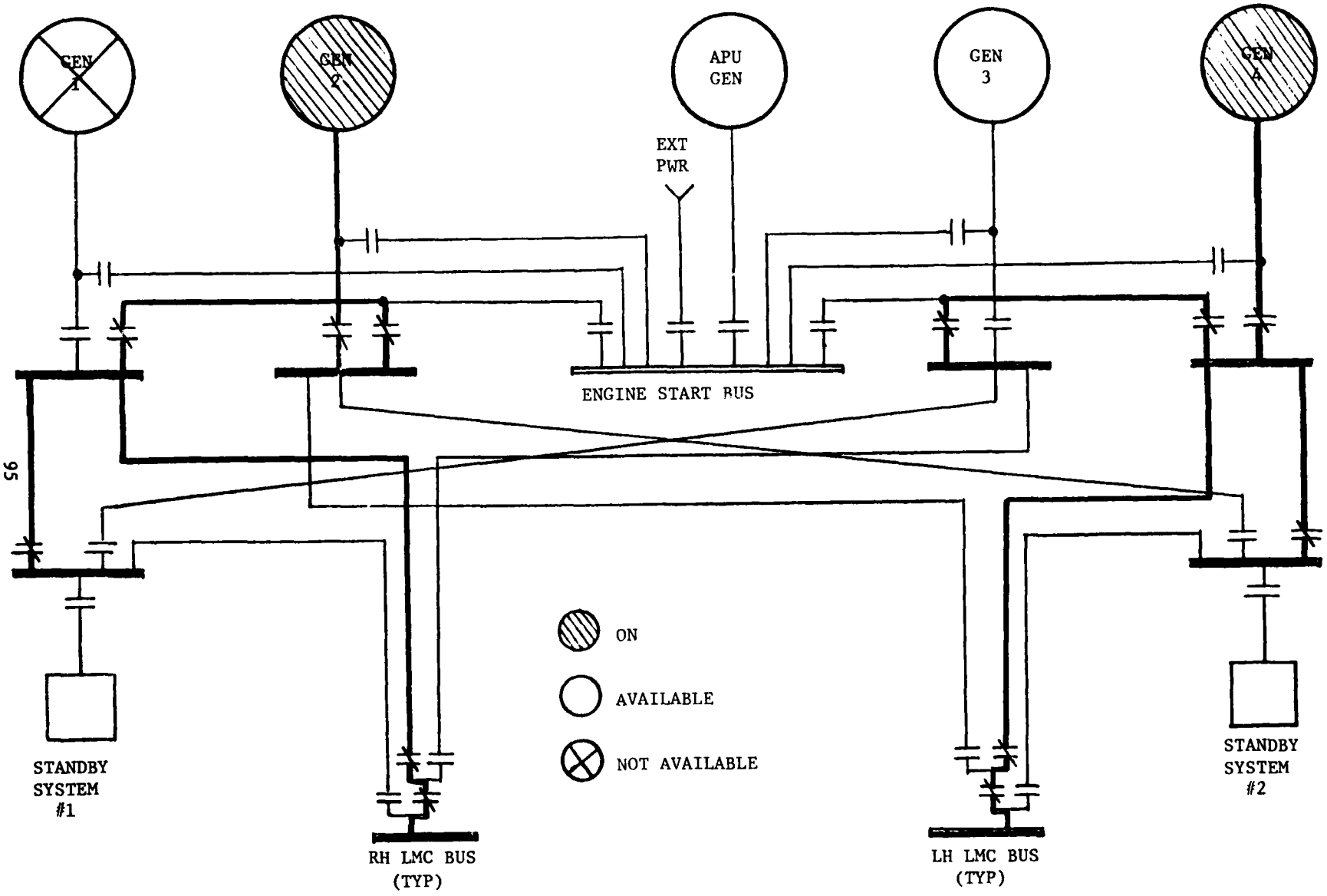

FIGURE 25F ONE GENERATOR OUT

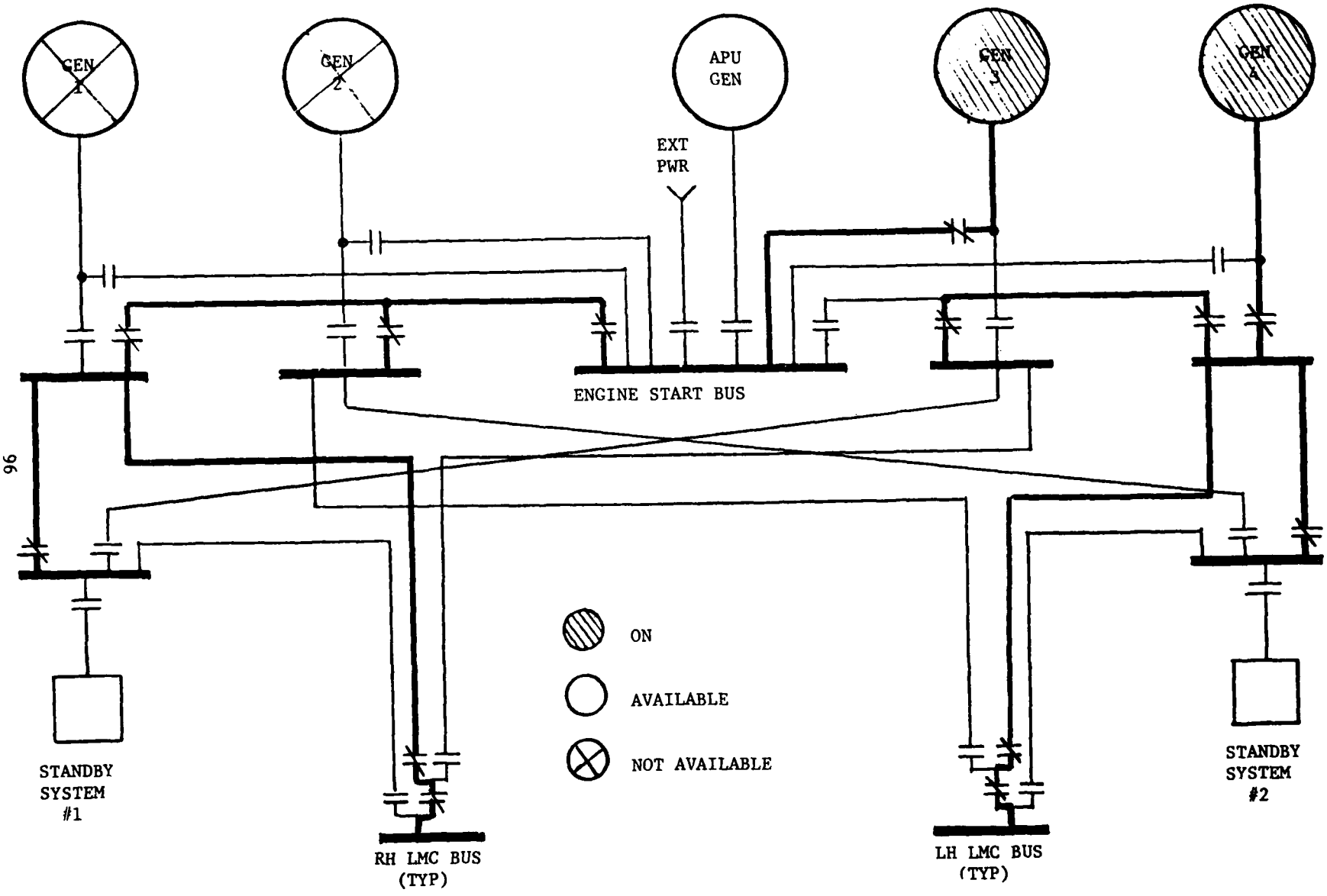

FIGURE 25G TWO GENERATORS OUT

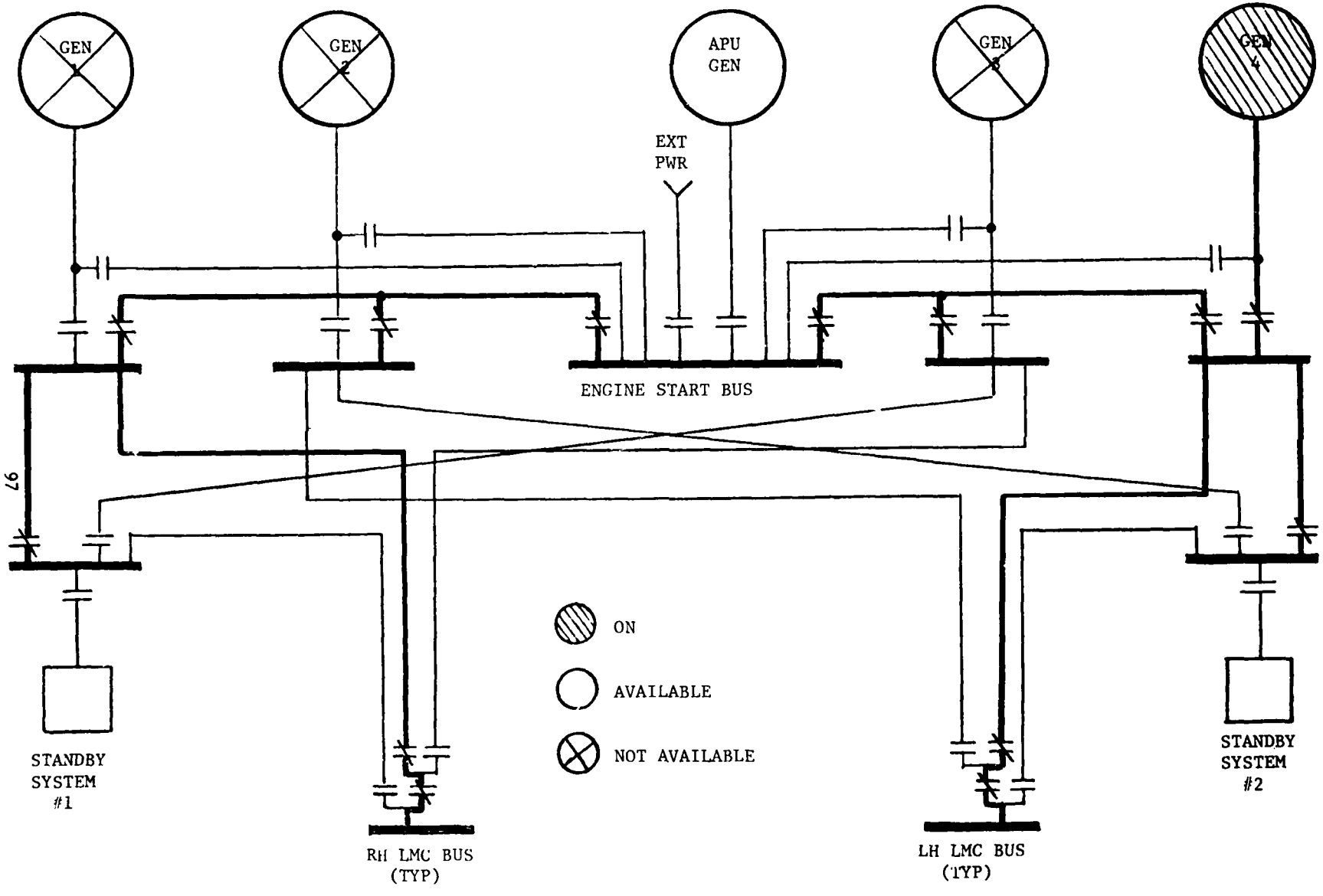

FIGURE 25H THREE GENERATORS OUT

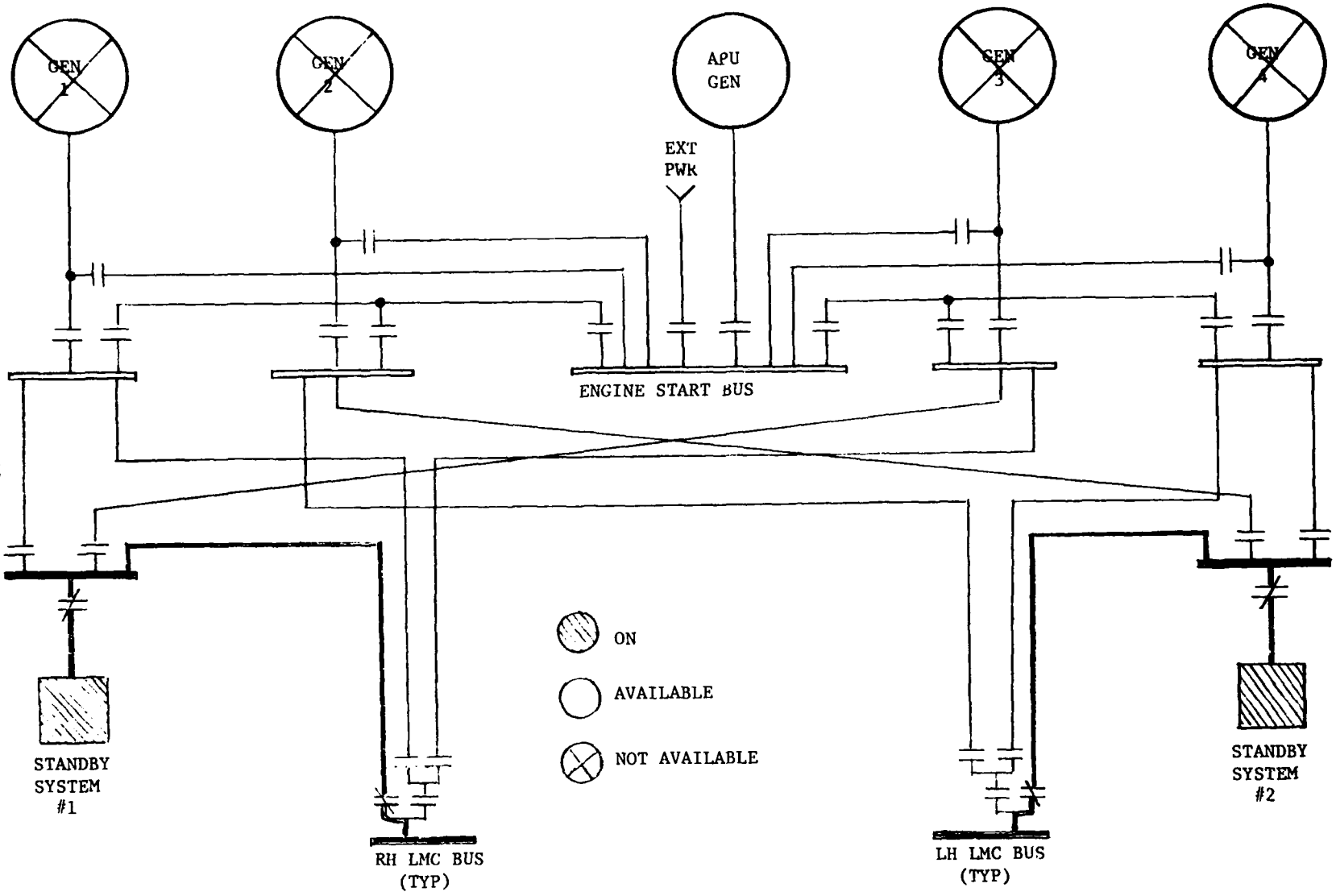

FIGURE 25J ALL GENERATORS OUT

The bus tie and LMC feeder system permits all LMCs to be powered as various combinations of generators fail. Several of these conditions are shown in Figures 25F through 25H.

With all generators non-operational, the LMCs are energized from the inverter or standby buses while the EMUX system allocates power to equipment through individual power controllers (see Figure 25J). This mode is operational until aircraft recovery or until start-up of the APU driven generator.

4.2.3 POWER DISTRIBUTION SYSTEM

The power distribution system consists of signal sources, solid state power controllers and a data processing and multiplex system similar to the EMUX system discussed for the single engine system. With this hardware, the power flow from the load management (or power distribution) centers to individual utilization equipments is controlled and protected. In addition, power is rationed in instances of power shortages.

Signal Sources

Approximately 320 signal sources or transducers will interface directly with the EMUX system. This count assumes liberal use of multi-function DAIS displays in the aircrew stations. The source count also assumes that a three member flight crew will be assigned to the aircraft.

The signal sources utilize the switched impedance interface in order to maximize BIT coverage while minimizing external wire interface points. As discussed for the single engine aircraft power distribution system, the prime advantage of the switched impedance concept is the transfer of several information items down a common pair of wires.

Power Controllers

Solid state power controllers designed to the requirements of MIL-P-81653 are used for control and fault protection of power flow to individual utilization equipments or components. Approximately 1000 power controllers are required for power distribution control. These devices are single phase 115 VAC modules rated between 1/2 and 10 amperes. Devices rated above 10 amperes will use MIL-C-83383 remote controlled circuit breakers designed with an EMUX BIT control interface. Table 18 depicts a representative allocation of controller ratings to the nine LMCs.

Electrical Multiplex System

An EMUX system similar to that used in the single engine electrical system controls the flow of power to individual utilization equipments. In order to sample all electrical system input signals and control all output devices, 32 universal multiplex/demultiplex terminals are required. This terminal count supplies approximately 30% spare channels for future system expansion.

To enhance system survivability and accommodate over 80 terminations to the EMUX data buses, the split bus architecture discussed in Section 5.3 is utilized. This architecture is illustrated in Figure 26.

Each of the two data bus networks consists of a redundant bus with two central EMUX processors connected (total of 4 processors on aircraft). The split EMUX system is essentially divided between equipments installed in the left verses right side of the aircraft. Flight critical systems are energized from both the left and right systems (EMUX systems A and B). This left/right division is comparable to the power generation system division for powering left and right side LMCs.

TABLE 18

CONTROLLER ASSIGNMENT TO LMCs

LOAD MANAGEMENT CENTER NO.	MIL-P-81653 RATING (AMPS)				MIL-C-83383 20.0 AMPS
	0.5	2.0	5.0	10.0	
1	56	27	15	18	6
2	46	27	7	9	2
3	44	32	5	8	2
4	44	32	10	8	1
5	48	34	12	10	2
6	24	15	10	2	0
7	24	15	10	3	0
8	88	58	15	17	4
9	110	51	26	18	4
SUBTOTALS	484	291	110	93	22
TOTAL	1000				

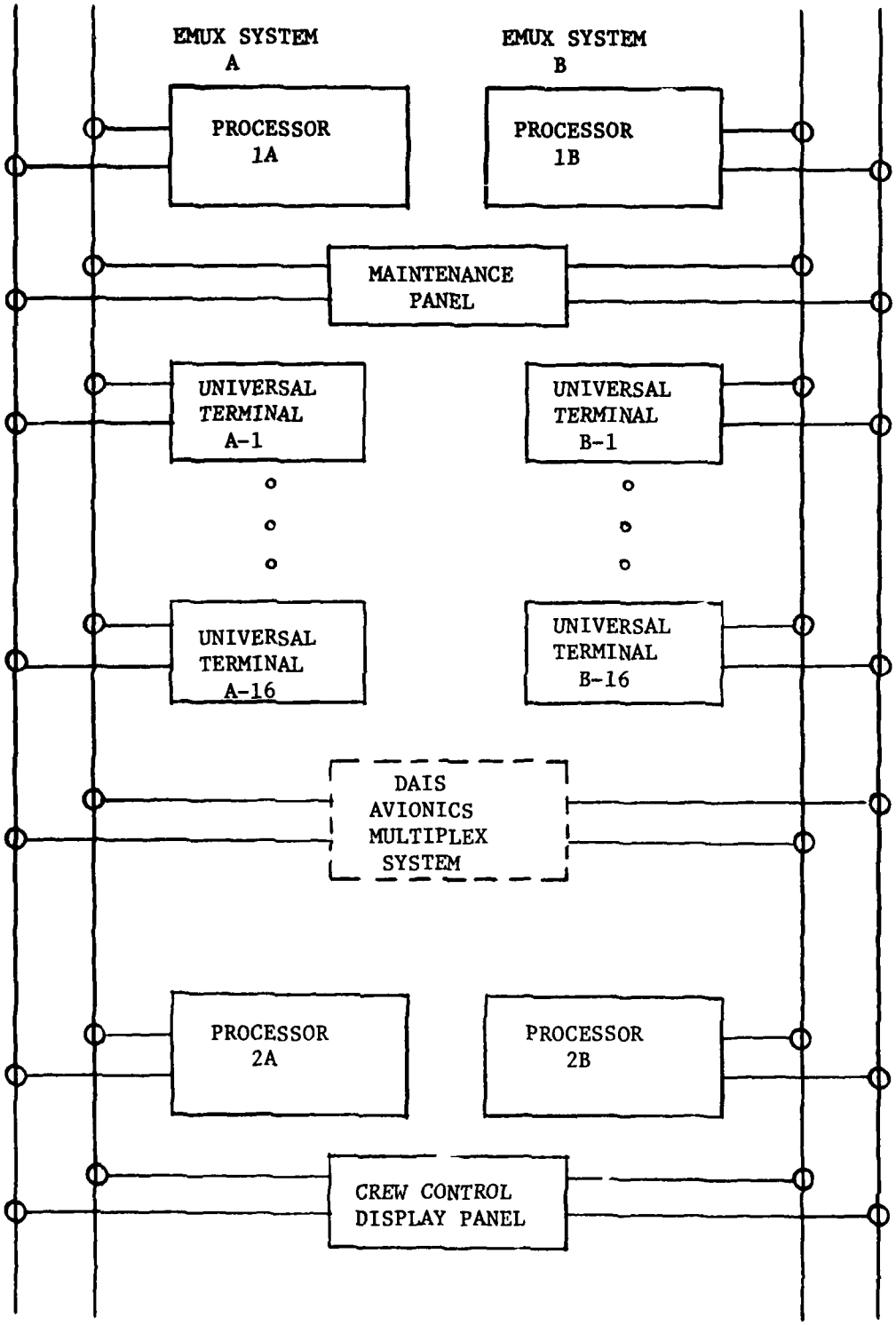

FIGURE 26

SELECTED EMUX ARCHITECTURE MULTI-ENGINE SYSTEM

Common hardware or systems such as maintenance panels, cockpit EMUX displays and avionic multiplex system interconnects monitor all four EMUX data buses. These common points will not, however, degrade system isolation since all bus connections are through transformer coupled long stub data bus couplers (MIL-STD-1553).

While twisted-shielded pair (twinax) data bus implementation is proposed, a fiber optic system is also acceptable. Trading off fiber optic vs. TSP data buses shows no clear advantage of one system over the other for a general application. It is plausible that the fiber optic system is less susceptible to EMI/EMP than TSP. When one considers that the remaining EMUX system is electrical vs. optical and that the data word transfer contains transmission error detection features, the "improvement" of fiber optics is not likely significant.

SECTION V

TRADE STUDIES

Trade studies and relative assessments were made of various electric system capabilities that can provide significant benefits to aircraft electrical systems in the 1990 time period. Summaries are tabulated in Table 19. Generalized advantages and disadvantages may or may not apply to specific aircraft applications. Additional studies include power generating system trades, a reliability assessment on the power system, a reliability assessment on EMUX processor redundancy, EMUX integrated power control concepts and a weight evaluation of engine electric self start capability. These studies were conducted to support selection of preliminary designs for a single engine and a multi-engine aircraft.

5.1 POWER GENERATING SYSTEM STUDY

A trade study was conducted on the contending advanced technology generating concepts. The concepts include the VSCF (cycloconverter and DC link), CSD and IDG systems. Trade parameter data was received from generating system manufacturers in the form of a response to Vought's "Request for Data Questionnaire". Table 20 lists the questions submitted by Vought and the manufacturers response to each question. It should be noted that the questions and responses are generalized. Actual numerical values will vary in a specific aircraft application due to design constraints imposed by the prime aircraft developer. For this reason, direct comparison of the numerical data must be made cautiously.

The conclusion is that generating system requirements for the 1990 time period aircraft can be met with either the IDG or the VSCF (cycloconverter) concept.

TABLE 19

ELECTRIC SYSTEM CAPABILITIES

FUNCTION	ADVANTAGES	DISADVANTAGES
Electric Engine Start (Starter/ Generator)	1. Eliminates the need for a separate starter on each engine. 2. Engine frontal area is reduced since conventional starter is eliminated. 3. Some of starter weight can be in avionics bay (converter) rather than on the engine. (Not applicable to integrated VSCF concept.) 4. Does not require quality electric power, i.e., supply voltage can droop at the beginning of the start cycle. 5. Savings in weapon system realiability and cost are anticipated over the separate starter concept.	1. Does not in itself provide "self start" capability. 2. 400 HZ power must be available. 3. Use of battery/inverter for "self start" capability is not practical due to large quantity of power required. 4. Power supply output may be distorted by the starter during starting mode and may not be suitable for use by aircraft avionic loads during the start cycle. (Not applicable to IDG systems.) 5. Increases generator system weight approximately 12% per channel due to additional controls required. 6. Will increase electric system failure rate due to added control complexity and added stress on the system. 7. Redesign of existing external power cart is required. 8. Generating system rating is usually dictated by start requirements rather than electric load requirements. (Approx. 90 KW or greater is required to start most engines)

ELECTRIC SYSTEM CAPABILITIES (Continued)

FUNCTION	ADVANTAGES	DISADVANTAGES
Electric Power Under Engine Windmilling Conditions	1. May eliminate the need for a separate emergency power source. 2. Approximately 12% of generator rating can be converted to 28 VDC at 25% of max. rated engine speed.	1. Adds approx. 8% to generating system weight due to the added controls required. 2. Only "variable frequency" power can be generated, i.e., AC power not suitable for most aircraft loads (an inverter is required) 3. Does not take the place of an APU (Does not provide ground power) 4. Must be disabled for certain failure modes.
Paralleling Capability	1. Provides a stiffer power source, consequently lower transients are generated during heavy load switching. 2. Can provide an uninterrupted power bus during bus switching or in the event of a generator channel failure. Power is interrupted only for certain channel failure modes.	1. Adds approx. 3% to generating system weight per channel due to additional controls required. 2. "Stiffer" power source not likely required with load management, but may be required for a specific load. 3. Control of system stability is more complex. 4. All parallel busses interrupted or disturbed for fault clearing or certain channel failure modes.
Automatic Load Management	1. Prevents possible loss of generating system due to a malfunction or component degradation 2. Can be provided by EMUX with essentially no weight or cost penalty.	1. May not be needed in a multi-channel system due to the redundancy provided. 2. Control of system stability is more complex. 3. Decrease in system reliability due to added complexity.

ELECTRIC SYSTEM CAPABILITIES (Continued)

FUNCTION	ADVANTAGES	DISADVANTAGES
Automatic Load Management (Cont'd.)	3. Appropriate for use on an APU to provide optimum use of available power since APU rating varies with altitude, cooling, etc. 4. Predominate advantage in multi-channel system results from improvement in mission completion capability during multiplex failures. 5. Reduces level of step power changes in loads, resulting in lower voltage transients. 6. Can possibly reduce generator system rating, thus reduce weight. 7. Can be used to limit load on APU during ground operations and to automatically "safe" specific loads during ground checkout.	
Perform GCU Function in EMUX	1. A weight savings is realized over systems having GCU as a separate assembly. 2. Simplifies interface wiring in multi-channel systems, i.e., paralleling, synchronizing, load division requirements, etc. 3. Provides all control data at central location.	1. GCU function in VSCF systems is performed within converter. Minimal weight savings is realized with removal of GCU functions. 2. EMUX "response time" is not compatible with realtime generator performance requirements. 3. Possible loss of effective quad redundancy in a four channel system. 4. Complicates and increases control power requirements for system start-up. (Power for GCU function must be derived from a separate source) 5. Correlation of GCU requirements between two vendors is required (Generator vendor and EMUX vendor)

ELECTRIC SYSTEM CAPABILITIES (Continued)

FUNCTION	ADVANTAGES	DISADVANTAGES
28 VDC Power Supplied Directly From Variable Speed Generator	1. Decrease system weight since T/R magnetic components are small due to high frequency. 2. Loss of regulated AC power does not result in loss of DC power for most channel failure modes (AC converter is in parallel with DC inverter)	1. Separate regulator is required for DC power. 2. Additional contactor is required (between T/R unit and load bus) 3. Certain channel failure modes result in loss of both the AC channel and the T/R associated with it. 4. Provisions must be made for DC when operating with ground power.
Permanent Magnet Rotor Generator	1. Eliminates the need for a field winding and associated cooling requirements. 2. Eliminates the need for rectifiers and associated cooling requirements. 3. Eliminates the need for an auxiliary power supply. 4. Anticipated increase in reliability due to the elimination of windings, rectifiers, and cooling provisions. 5. Total losses are lower than in wound rotor generator. 6. Generator efficiency is higher due to absence of exciter losses and lower windage losses resulting in higher overall efficiency. 7. Simplifies generator/starter design requirements.	1. Generator creates higher voltage variations since field excitation cannot be controlled. 2. Voltage regulation control in converter is more complex. 3. Converter efficiency is lower due to higher losses in despike networks 4. SCR voltage ratings must be higher, consequently more costly. 5. A disconnect (electrical or mechanical) is required to protect from certain failure modes since the generator cannot be de-energized by removing excitation.

ELECTRIC SYSTEM CAPABILITIES (Continued)

FUNCTION	ADVANTAGES	DISADVANTAGES
EMUX Power Control	1. Allows weight reduction in complex electrical systems. 2. Improves maintainability. 3. Decreases life cycle cost. 4. Improves power quality (loads are programmed ON and OFF)	1. Only practical for moderate to very complex (numerous loads) electrical systems. No size and weight advantage for simple systems.

TABLE 20

DATA SURVEY ADVANCED TECHNOLOGY ELECTRIC POWER SYSTEM (SHEET 1 OF 4)

VOUGHT QUESTION	WESTINGHOUSE	GENERAL ELECTRIC	SUNDSTRAND
1 What power generation concept do you envision will best meet the needs of aircraft electric power systems in the 1980 1990 time period?	VSCF (cycloconverter) 115 200 V 400Hz	VSCF (cycloconverted) 115 200 V 400 Hz	Integrated Drive Generator 115 200 V 400 Hz
2 What is weight of the above system (per channel) from engine mount to point of regulation? (point of regulation is 10 ft from power out terminals)	TODAY Rating (kVA) 40 0 60 0 90 0 150 0 Drive Generator 45 0 52 0 67 0 95 0 Converter 40 0 55 0 65 0 80 0 GCU 5 0 5 0 5 0 5 0 CT's 0 8 1 0 1 25 1 6 Feeders 8 3 12 8 20 0 33 0 QAD 3 0 4 0 4 0 4 0 Oil Cool Prov 10 0 11 0 12 7 16 0 Other Total (lb) 112 1 140 8 174 9 134 6 PROJECTED (1990) Rating (kVA) 40 0 60 0 90 0 150 0 Drive Generator 40 0 47 0 60 0 85 0 Converter 35 0 50 0 60 0 75 0 GCU 5 0 5 0 5 0 5 0 CT's 0 8 1 0 1 25 1 6 Feeders 8 3 12 0 20 0 33 0 QAD 2 8 3 8 3 8 3 8 Oil Cool Prov 9 5 10 5 12 0 15 0 Other Total (lb) 101 4 130 1 162 0 218 4 Cycloconverter cooling not included Feeders Established by Vought Gen Cooling Includes Cooler and Coolant Pump	TODAY Rating (KVA) 40 0 60 0 90 0 150 0 Drive Generator 49 0 65 0 85 0 110 0 Converter 45 0 57 0 75 0 96 0 GCU CT's 1 0 1 0 1 0 1 0 Feeders 8 3 12 8 20 0 33 0 QAD 1 0 1 0 1 0 1 0 Oil Cool Prov Other Total (lb) 104 3 136 8 182 0 241 0 PROJECTED (1990) Rating (KVA) 40 0 60 0 90 0 150 0 Drive Generator 42 0 59 0 78 0 103 0 Converter 40 0 50 0 65 0 85 0 GCU CT's 1 0 1 0 1 0 1 0 Feeders 8 3 12 8 20 0 33 0 QAD 1 0 1 0 1 0 1 0 Oil Cool Prov Other Total (lb) 92 3 123 8 165 0 223 0 Feeders Established by Vought Converter Cooling Not Included GCU Included in Converter Gen Cooling Shared With Gearbox	TODAY Rating (kVA) Drive 34 0 40 0 57 0 105 0 Generator 22 5 33 5 53 0 74 0 Generator 22 5 33 5 53 0 74 0 Converter GCU 4 5 4 5 4 5 4 5 GCU 0 82 0 82 1 3 1 3 Feeders 8 3 12 8 20 0 33 QAD 4 1 4 1 4 1 4 1 Oil Cool Prov 0 8 1 0 1 2 1 65 Other Total (lb) 75 0 96 7 141 1 223 5 PROJECTED (1990) Rating (kVA) Drive 32 0 36 0 51 0 94 0 Generator 17 5 25 0 38 6 54 0 Converter GCU 3 0 3 0 3 0 3 0 CT's 0 5 0 5 0 75 0 75 Feeders 8 3 12 8 20 0 33 0 QAD 2 0 2 0 2 0 2 0 Oil Cool Prov 0 8 1 0 1 2 1 65 Other Total (lb) 64 1 80 3 116 6 188 4 Feeders Established by Vought
3 Does system have capability of supply electric power under engine windmilling conditions? If "yes", define output power vs engine rpm	Yes output power is 115 200 V Today / Projected 10% max rated rpm 0% / 0% 20% max rated rpm 0% / 0% 30% max rated rpm 0% / 0% 50% max rated rpm 100% / 100%	Yes output power is 30 V dc Today / Projected 10% / 20% 20% / 25% 25% / 25% 25% / 25%	Yes output is assumed to be converted to 28 V dc Today / Projected 0% / 0% 42% / 42% 65% / 65% 100% / 100%
4 Does system provide engine start capability? If "yes", (a) How much weight (in %) is added to the basic system? (b) What are torque/rpm characteristics?	*No (being studied)*	Yes (a) Add 10% basic system weight (b) Similar to dc machine	Yes (a) 40 kva 6 5 lb 60 kva 7 5 lb 90 kva 8 0 lb 150 kva 15 lb (b) Per torque speed curve
5 What magnetic material is used for the generator?	HYPERCO 27 Today HYPERCO 50 Projected (1990)	Permendur Today Projected	Cobalt vanadium iron Today Cobalt vanadium iron Projected
6 What is recommended speed? (assume 2 to 1 range)	26 000 RPM Today 26 000 RPM Projected (1990)	22 000 27 000 Today 24 000 36 000 Projected	18 000 rpm Today 24 000 rpm Projected

TABLE 20

DATA SURVEY ADVANCED TECHNOLOGY ELECTRIC POWER SYSTEM (SHEET 2 OF 4)

VOUGHT QUESTION	WESTINGHOUSE	GENERAL ELECTRIC	SUNDSTRAND
7 What is system efficiency to point of regulation? At min speed rated speed max speed	Today / Projected KVA 40 0 60 0 90 0 150 0 / 40 0 60 0 90 0 150 0 76 8 79 7 82 6 84 5 / 77 8 80 6 83 5 85 4 70 1 73 9 77 8 81 6 / 71 0 74 9 78 7 82 6 63 4 68 2 73 0 77 8 / 65 3 69 1 73 9 78 7 Does not include feeder losses	Today / Projected KVA 40 0 60 0 90 0 150 0 / 40 0 60 0 90 0 150 0 80 0 82 0 84 0 85 0 / 82 0 84 0 85 0 86 0 79 0 81 0 83 0 84 0 / 80 0 82 0 84 0 86 0 78 0 80 0 82 0 83 0 / 79 0 81 0 83 0 84 0 Does not include feeder losses	Today / Projected KVA 80 0 80 0 80 0 80 0 / 80 0 80 0 80 0 80 0 81 0 81 0 81 0 81 0 / 81 0 81 0 81 0 81 0 77 8 77 8 77 8 77 8 / 77 8 77 8 77 8 77 8 Does not include feeder losses
8 Does system have parallel operation capability? If "yes" how much weight (in percentage) is added to the basic system?	Yes Approx 3 lb	Yes Approx 3 lb	Yes Approx 1 0 lb per channel
9 What overload capability does the system provide for 5 minutes, 2 minutes 5 seconds?	1 5 PU for 5 minutes 2 0 PU for 5 second or whatever is required	1 5 PU for 5 minutes 2 0 PU for 5 seconds	1 5 PU for 5 minutes 1 7 PU for 2 minutes 1 75 PU for 5 seconds Can provide "whatever is needed" at some increase in weight
10 Is power quality better than Mil Std 704? If "yes" in what areas and how much? (a) Voltage Regulation (b) Voltage Transients (c) Distortion (d) Frequency Regulation (e) Frequency Drift (f) Frequency Transients (g) Overvoltage Transients (h) Undervoltage Transients (i) Phase Voltage Balance	Yes Today / Projected +0 8% Recovery in 10ms Less than 5% +0 1% +0 1% None 160 VRMS 90 VRMS +1 5V (120+2 5)	Yes Today / Projected +1 0 V / +1 0 V See Mil E 23001B 4% / 4% 1 0 Hz / 1 0 Hz 1 0 Hz / 1 0 Hz None / None See Mil E 23001B See Mil E 23001B Individual Phase Voltage Reg	Yes Today / Projected +1 0 V / Meet or Recovery in 15 ms / exceed requirements 2 - / of Mil G 21480 +4 0 / & Mil Std 704 None +20 Hz 135 V 15 90 vrms 3 5 - 2 3 0 0 PU
11 Is microprocessor used in the GCU to improve capability? If "yes" what improvements are expected?	Today No Projected Yes Microprocessor will improve self test and provide flexibility Will not improve power quality	Today No Projected Yes Microprocessor will improve maintainability	Today Yes Projected Yes Microprocessor improves self test capability and provides better steady state regulation
12 Is DC component of voltage present on the 400 HZ bus? If "yes" how much?	Yes Less than 50mv	Yes Less than 50mv	No
13 To what extent can built in test and fault isolation be provided? What parameters should be monitored?	Any reasonable level of built in test can be provided Can provide fault isolation to LRU	Fault isolation to LRU	Automatic sates conditions and intermittent faults in IDG GCU BCU feeders buses and control wiring independent of circuit reliability
14 What is minimum service life between overhaul? For drive generator converter GCU	Today / Projected On Condition / On Condition 2 000 hours / On Condition On Condition / On Condition	Today / Projected On Condition / On Condition On Condition / On Condition On Condition / On Condition	Today / Projected On Condition / On Condition On Condition / On Condition On Condition / On Condition
15 What type of cooling system is used for the drive? Generator? Converter?	Drive / Gen / Conv Type of Coolant: Oil / Oil Coolant Temp: 250 F / 176 F Coolant Flow (gpm): 2 7 / 2 10 Coolant Pressure (psi): 50 250 / 200 Coolant Capacity: 0 75 pt / 1 3 qt *Depends upon KVA rating	Drive / Gen / Conv Type of Coolant: Oil / Oil Air Coolant Temp: 125 C / 71 C Coolant Flow: 50 gpm / 50 gpm Coolant Pressure: 100 psi / 100 psi Coolant Capacity: 2 qt / 2 qt	Drive / Gen / Conv Type of Coolant: Oil / Oil Coolant Temp (F): 65-300 / 65-300 Coolant Flow (gpm): 8 / 2 7 Coolant Pressure (psi): 60 / 60 Coolant Capacity (qts): 3

TABLE 20

DATA SURVEY ADVANCED TECHNOLOGY ELECTRIC POWER SYSTEM (SHEET 3 OF 4)

VOUGHT QUESTION	WESTINGHOUSE	GENERAL ELECTRIC	SUNDSTRAND
16 Would the same coolant system be used independent of generator system ratings?	Yes	Yes *2 GPM depending on rating	Yes
17 What type of technology is recommended for the bus controller (line contactor) function? Solid state electromechanical or hybrid?	Electromechanical	Electromechanical	Electromechanical
18 What control power characteristics (voltage & current) are recommended for the bus controller?	8 to 20 vdc 4 to 16 watts	28 vdc 2.0 amps	15 to 56 volts 2 to 15 amps
19 Will system meet requirements of Mil Std 461?	Yes	Yes	Today Yes Projected Yes
20 What is MTBF and MTTR for?	MTBF (hours) Today / Projected Drive Generator 12 000 / 24 000 Converter 5 200 / 10 000 GCU 30 000* / 33 000* MTTR (hour)** Today / Projected Drive Generator 8 / 8 Converter 3 / 2.7 GCU 2 / 1.8 **Performed at depot *Improved LSI parts	MTBF (Hours) Today / Projected Drive Generator 15 000 / 30 000 Converter 10 000 / 20 000 GCU MTTR (hours) Today / Projected Drive Generator 7 / 5 Converter 3 / 2 GCU	MTBF (hours) Today / Projected Drive 5 200 / 20 000 Generator 13 000 / 20 000 Converter GCU 4 000 / 10 000 MTTR (hours)** Today / Projected Drive 20 / 10 Generator 6 / NA Converter GCU 4 / 3 **Performed at depot includes drive and generator as one package
21 Does system have capability of operating isolated and synchronized? If "yes" (a) What is weight penalty for this feature? (b) What is the practical maximum no. of generating channels which can be synchronized?	Yes (a) None (b) Eight	Yes (a) 1% of basic system weight (b) Unlimited	Yes (a) One pound per channel (b) No limit
22 What is the maximum fault current (% rated) and time duration prior to gen trip?	2 PU current for 10 seconds (can be designed to meet any requirement)	3 PU current for 5 seconds	3 to 4 PU current for 10 seconds
23 Is it feasible to reduce fault current levels prior to opening the bus controller? (To prevent the bus controller from having to interrupt high fault currents) If "yes" will this control be sufficiently reliable to permit the use of a smaller bus controller?	Yes (a) Yes, this type of control is presently employed in cycloconverters to limit current	Yes (a) Yes	Yes
24 What is the projected "optimum" nominal voltage level and frequency of the generating system for the 1980-1990 time period? (i.e. 115/200 V, 400 Hz, 800 Hz, 230/400 V, 400 Hz, 270 V dc, other)	115/200 V, 400 Hz 800 Hz is too high for converter 230/400 V is too high for SCR to be used in converter 270 V dc not practical for near future because of development work needed	115/200 v ac, 400 Hz	115/200 V ac 400 Hz 230/400 V ac 400 Hz

TABLE 20

DATA SURVEY ADVANCED TECHNOLOGY ELECTRIC POWER SYSTEM (SHEET 4 OF 4)

VOUGHT QUESTION	WESTINGHOUSE	GENERAL ELECTRIC	SUNDSTRAND
25 In a four generator system should each generator be operated (partially loaded) continuously or should some generators be held in standby (no load but rotating)? What is relationship between MTBF and loading as a percent of rated load? What is relationship between efficiency and loading as a percent of rated load	Operate each generator continuously At full load MTBF is approx 75% of MTBF at half load Rate of no load losses to full load losses increases with increase in speed	Very feasible Very little effect with VSCF Highest efficiency at rated load Half load is three points less at quarter load 14 points less	Operate all channels under load As it will provide balanced life reliability and smaller voltage transients At cruise speed the efficiency at ½ rated load is approx 11% less than at rated load The efficiency at ¼ load is approx 5½% less than at ½ load
26 Do generator system failure modes frequently occur which permit the generator to deliver power but reduced level? If yes what generator parameters could be monitored to detect these conditions?	Generally no however open field diode limits overload rating and shorted field diode limits loads to 25% rated load Same effect for shorten and open leads in exciter armature	No	No
27 Should multichannel system load division be controlled by the associated GCU's or by a separate load division controller?	Within each cycloconverter	Associated GCU's	Associated GCU's
28 What percent of generator failure rate can be attributed to rotation alone? That is what is the difference in MTBF between a standby generator operating in a no load but rotating condition vs operating in a nonrotating condition? If the MTBF difference is significant, is a mechanical clutch which would permit connection of a generator to a rotating engine pad output feasible? How much weight and MTBF penalty would such a clutch impose on gen?	60% of failure rate is attributed to gen rotation Mechanical clutch is feasible It would add 8% of gen weight to system MTBF on clutch is not available	20% for wound rotor and 5% for solid rotor Yes in a few years Adds 3 to 5 lbs of weight Approx 15% reduction in MTBF MTBF is dependent upon the no of actuators	55% of gen failures is attributed to rotation Clutch is feasible but is very unreliable and heavy
29 What is recommended design implementation for providing no gap or minimal gap power under conditions of primary system failure and stand by or emerg power systems not operating? What is recommended maximum allowable gap based on GCU & hardware response?	Operate systems in parallel However a single fault could impact all systems Sense failure open controller to isolate fault sense bus and close bus controller	Supply dc power to critical loads	Sense fault, transfer to standby source startup alternate source, transfer to alternate source
30 What advantage disadvantages are projected for an integrated engine gen system? Is a permanent magnet gen a prerequisite for this type design? Will this dictate a preferred type of power (ac dc high freq ac etc	Feasibility not known at this time If feasible a weight saving should be realized Time & cost of servicing would increase Permanent magnet gen not prerequisite	Feasible with permanent magnet gen Not dictated by type of power	Feasible with either wound rotor or permanent magnet Permanent magnet preferred because of high reliability, however quick automatic disconnect req'd to limit fault current
31 Based on the advanced power generation concept system recommended it is believed to be feasible to have the EMUX system perform the GCU functions? What is the max transport delay allowable in the EMUX for providing an error correction signal in response to a sensed error signal for voltage and frequency regulation fault clearing etc?	Using EMUX to perform GCU function is not practical EMUX delay of less than 5 milliseconds is required	Not feasible	Feasible if EMUX transport delay is less than 100 micro seconds

Specific aircraft requirements will generally establish the concept to be used. An advanced IDG design offers some advantages over the cycloconverter VSCF system in the areas of size and weight. A weight comparison of typical systems is shown in Figure 27. It is noted that the data submitted for the IDG are for 1.75 P.U. overload rated systems. A 2.0 PU rating will result in some increase in weight, although it still will be below the VSCF weight. The IDG system also provides a high degree of confidence in terms of low technical risk since it is a design of mature technology. The cycloconverter VSCF system offers some improvements in power quality (precise frequency, no frequency transients, short duration voltage transients) and a potential for higher reliability, weight reduction and lower life cycle costs. These attributes are primarily in the converter area where frequency conversion and voltage regulation are performed with solid state components. Manufacturer supplied data (see Figure 27) also indicates a smaller weight increase per KVA as system ratings increase. Lowering power dissipation and improving semiconductor cooling techniques are the key to optimizing the VSCF system since semiconductor reliability is highly influenced by temperature.

The CSD (drive separate from generator) is not considered a candidate system for new aircraft designs even though these systems are operating on present day aircraft. The CSD system does not provide the desired low weight of either the IDG or VSCF systems. Also, the DC link VSCF concept has not progressed enough to be considered a viable candidate system for the 1990 time period. The High Voltage DC (HVDC) generating system was not evaluated as a candidate system in this study as this technology is currently being evaluated under on-going Navy R&D programs. However, it should be noted that HVDC (270 volts) may offer high quality power at the lowest life cycle cost since neither a drive nor a converter is required (assuming all loads are HVDC). Other advantages of HVDC are ease of paralleling multiple power sources, ease

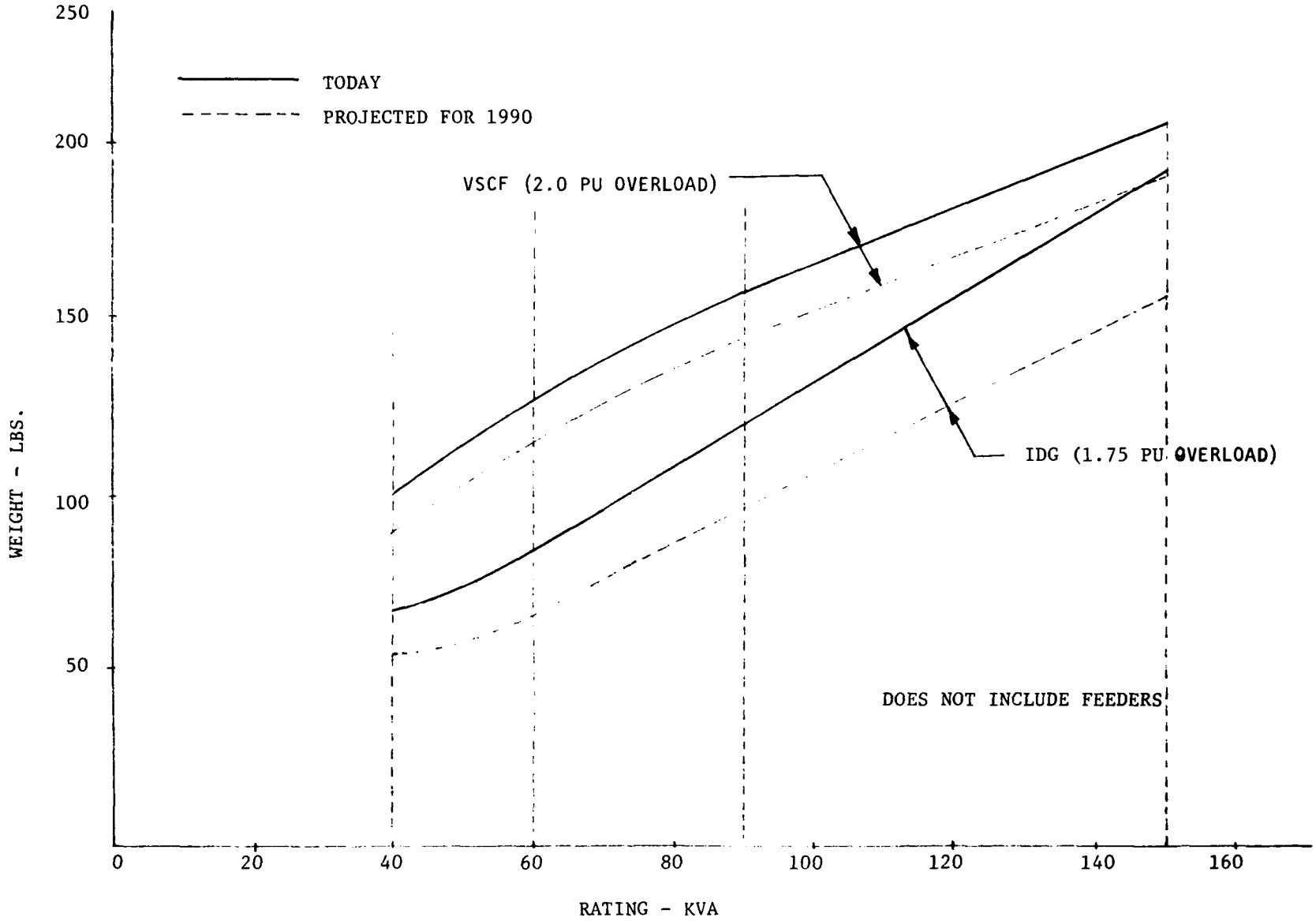

FIGURE 27 TYPICAL GENERATING SYSTEM WEIGHT COMPARISON

of providing true "gapless" power and ease of implementing the feeder fault isolation function by use of rectifiers. Two HVDC problem areas are the difficulty in clearing faults (severe arcing with electromechanical components) and the unavailability of HVDC utilization equipment.

The PMG system offers size and weight reductions over the wound rotor generating system with an improvement in reliability resulting from its relative simplicity. The PMG technology also allows design simplification in implementing the starter/generator function since the excitation problem associated with wound rotor systems (especially at zero speed) is eliminated. The PMG system also has its drawbacks. Since field excitation is uncontrolled, severe fault currents, as high as 15 PU rating, can be generated. To prevent possible damage to the prime mover or to the PMG system and for safety reasons, a quick means for disconnecting with reset capability should be provided.

The losses in a PMG system differ from those in a wound rotor system. In a wide speed range application the iron losses in a wound rotor system are essentially constant over the speed range since the voltage is regulated to stay constant. Also, the iron losses increase with an increase in load because the flux increases. In the PMG system, the iron losses increase with speed since the voltage is not regulated, and decreases with an increase in load since the flux level is reduced by armature reaction. The total losses (windage, excitation, iron) are less for a PMG system than for a wound rotor system.

Low voltage DC power (28 VDC) was the primary electrical power source on early aircraft. As utilization equipment power demand increased, the demand for 28 VDC power relative to AC power has diminished to a level than an all AC system

can be projected for the 1990's. Some 28 VDC power will likely still be required in the 1990's for "special" load conditions. These special loads can be supplied more efficiently on a limited basis than on a system-wide basis. Typically, this can be accomplished as follows:

In the first approach, a conventionally hardwired power connection can be provided from a battery to the appropriate load such as a communication set "black box". The power wire would be protected by a "normally closed" solid state power controller. This permits delivery of power independent of EMUX while allowing control of the SSPC after EMUX is powered up. The battery used as the power source is the same battery used to start the APU and to provide a short term "uninterrupted" power bus.

The second approach is to use self contained (within the utilization equipment) batteries for a backup power source. In this concept, a small rechargeable battery is installed in (or adjacent to) the associated black box. When available, bus power is supplied to the equipment from the EMUX controlled source. This self-contained battery approach is acceptable as long as the number of loads requiring backup power is small and other operational requirements do not dictate installation of a large battery.

A third concept is to install transformer rectifier units within selected LMCs to power "localized" DC loads. Here again, it is assumed the DC load demand is low.

An aircraft with either fly-by-wire or engine self-starting (or both) will virtually ensure the installation of a reliable, instantaneously "energized"

backup power source. These characteristics are difficult to achieve unless the source is DC. However, it is advantageous from an overall system integration viewpoint to convert this power to AC.

By standardizing all bus management and power distribution hardware on either AC or DC, significant savings can be achieved in electrical system life cycle costs. These cost savings result from:

- Lower system weight by eliminating secondary power converters, feeders, buses and switching hardware.
- Increased reliability and reduced maintenance actions, through elimination of the above equipments.
- Lower logistic cost by eliminating the secondary power hardware and reducing the number of different load controller types.
- Standardization of load controllers to simplify the Integrated Load Management Center concept.

These benefits can be achieved by standardizing on either 115 or 230 volts AC or on a 270 volt DC voltage level.

The potential advantages to standardization on DC power lie predominately in lower avionic power supply weights and simplified power source isolation and paralleling. Acceptance of high voltage DC at this time, however, is limited by industry confidence in low technical risks. Since minimal risks are foreseen from selection of an AC standard, an AC system is selected for the preliminary design.

The major power generation subsystem question which still remains is the impact of fly-by-wire reliability and vulnerability requirements. These requirements can only be tailored once the aircraft system performance characteristics have been defined. At this point, the best study approach is

to define the level of reliability available with the selected power system and provide options for improvement if the levels are considered insufficient.

5.2 RELIABILITY ASSESSMENT OF POWER SYSTEM

A study was conducted to determine the significant parameters which impact the electrical system reliability. This was done by allocating the system failure rate among three major subsystems; power generation, bus configurations and power distribution. It should be noted that the requirements given in Sections 3.1 and 3.2 for mission completion and safe return of aircraft were goals to be achieved. Furthermore, the requirements should be considered as typical since specific aircraft missions will dictate specific reliability requirements.

The reliability requirements (see 3.1 and 3.2) for delivering power to a bus and to all utilization equipment on a single and a multiple engine aircraft summarized as follows:

	Probability of Success	
	Single Engine	Multi-Engine
Aircraft Safe Return - Bus	.9998	.99995
- All Equip	.998	.991
Mission Completion - Bus	.995	.9998
- All Equip	.990	.980

5.2.1 POWER TO BUS

A reliability assessment was made on several power generating system configurations to establish the minimum number of generating channels

required on a multi-engine (four) aircraft to meet the required reliability goals. Since the number of channels is primarily influenced by mission completion requirements, the assessment provides insight into an optimum arrangement. Figure 28A through 28H depict reliability block diagrams for the significant (failure prone) hardware of eight configurations for a four engine aircraft. The block diagrams illustrate the primary AC and, when applicable, secondary DC portions of the main power system. The top reliability block of each diagram represents a series connection of the turbofan engine (MTBF 600 hours) and the AC generator (MTBF 1000 hours) for an equivalent primary power source MTBF of 375 hours. The 600 hour MTBF for the turbofan engine represents failures resulting in maintenance action. While very few of these maintenance related failures would result in loss of generator rotation, use of the 600 hour rate yields very conservative reliability predictions. Furthermore, accurate determination of a failure rate from loss of engine rotation was beyond the scope of this study. Tables 21 and 22 summarize the probability of mission success, the effective failure rate and the effective MTBF fdor the primary and secondary subsystems in the eight multi-engine configuration options. These values are based on a six hour mission time. As shown in Table 20, transition from a four generator system to a three generator system results in increasing the failure rate (decreasing reliability) by an approximate factor of 60. However, the reliability of the three channel system is still very high (0.999996). The two generator system suffers a two to three order-of-magnitude increase in failure rate of the four channel system and yields a reliability of 0.999748 which is below the 0.9998 goal established. For this reason, the two channel power system was dropped from further consideration.

Table 22 compares the reliability parameters for various secondary (DC) subsystem options. This table reveals that for a three or four T/R unit

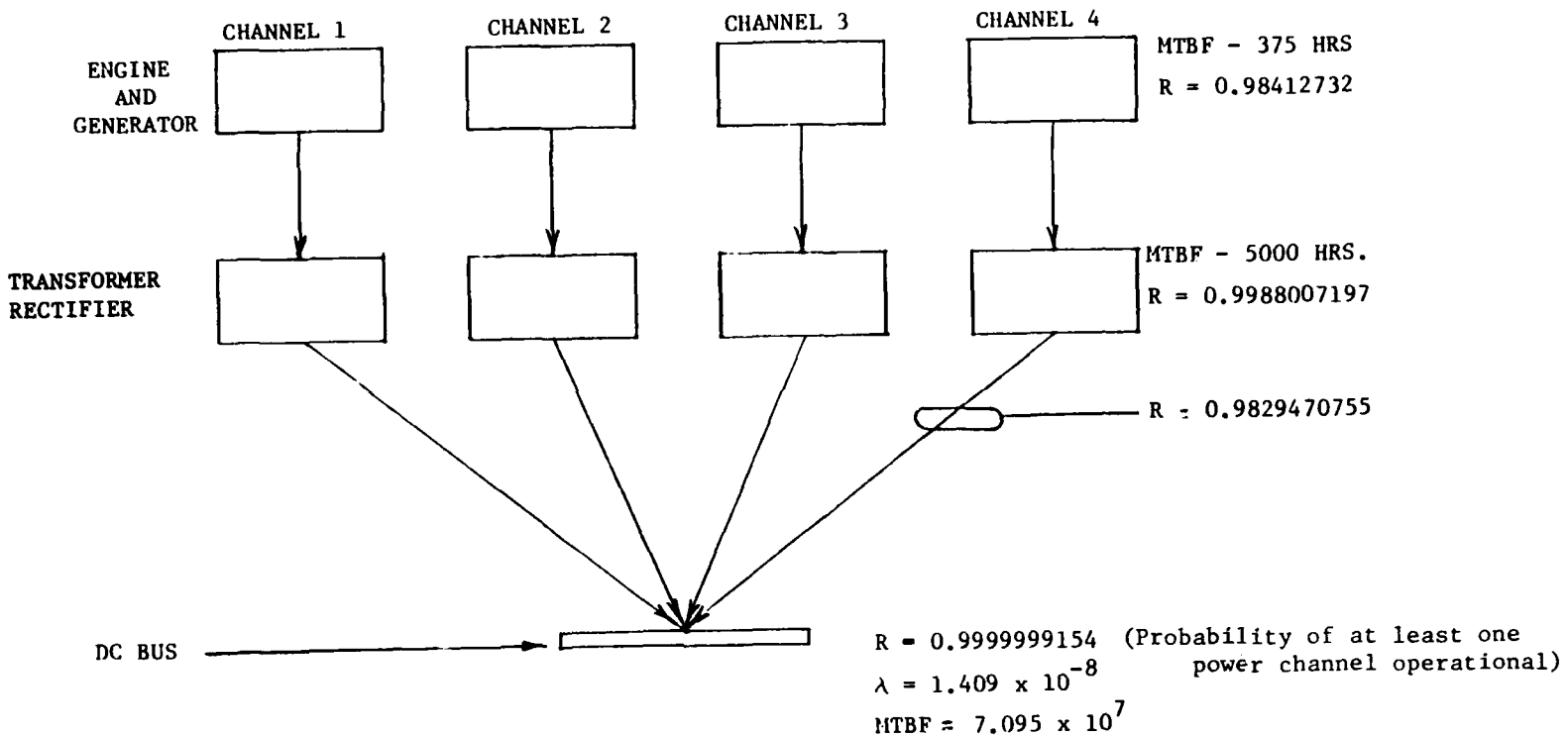

FIGURE 28A - MAIN POWER SYSTEM - OPTION 1 - FOUR GENERATORS, FOUR T/R UNITS , NO AC CROSS-STRAPPING

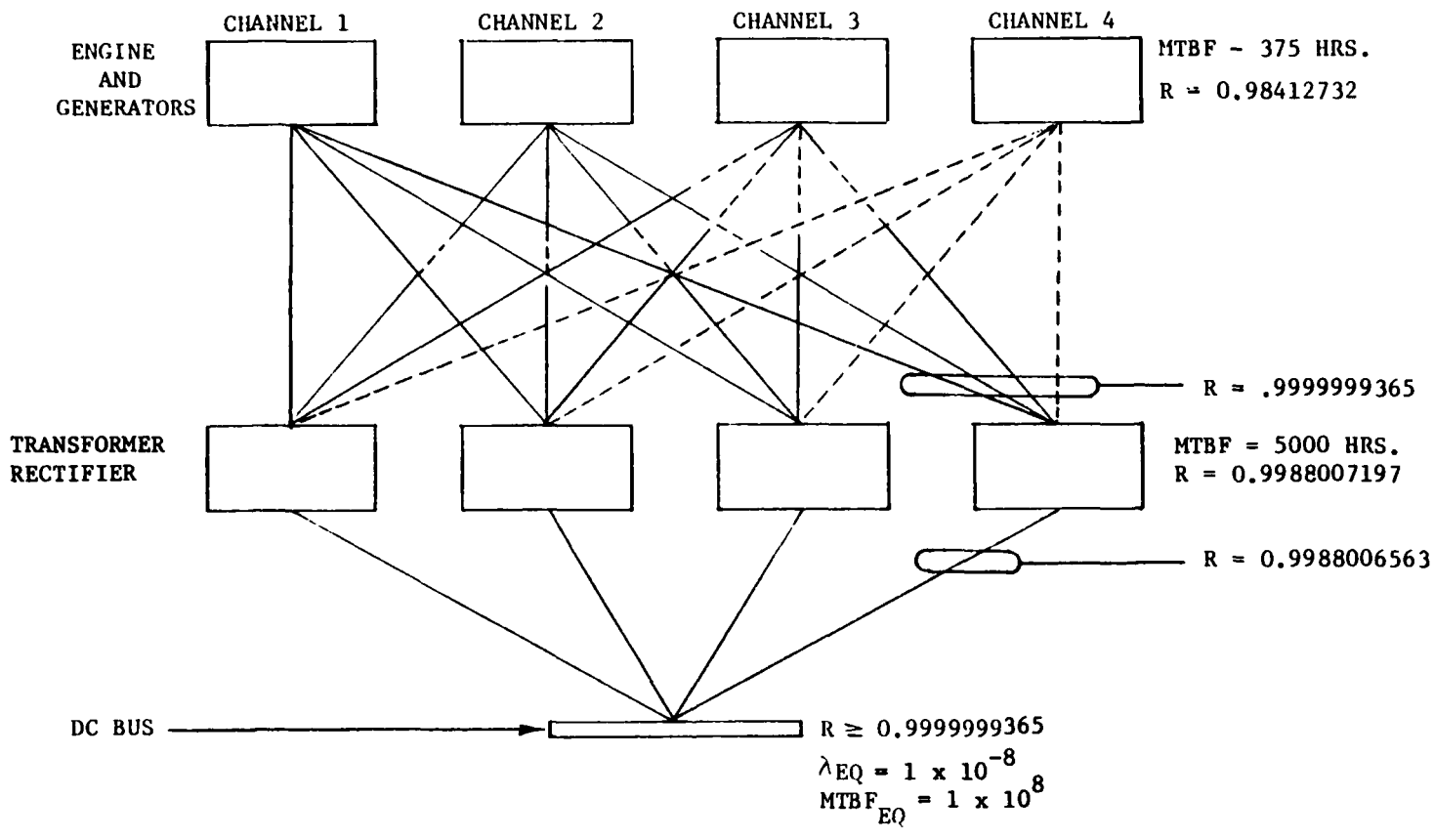

FIGURE 28B - MAIN POWER SYSTEM - OPTION 2, FOUR GENERATORS, FOUR T/R UNITS, AC CROSS-STRAPPING

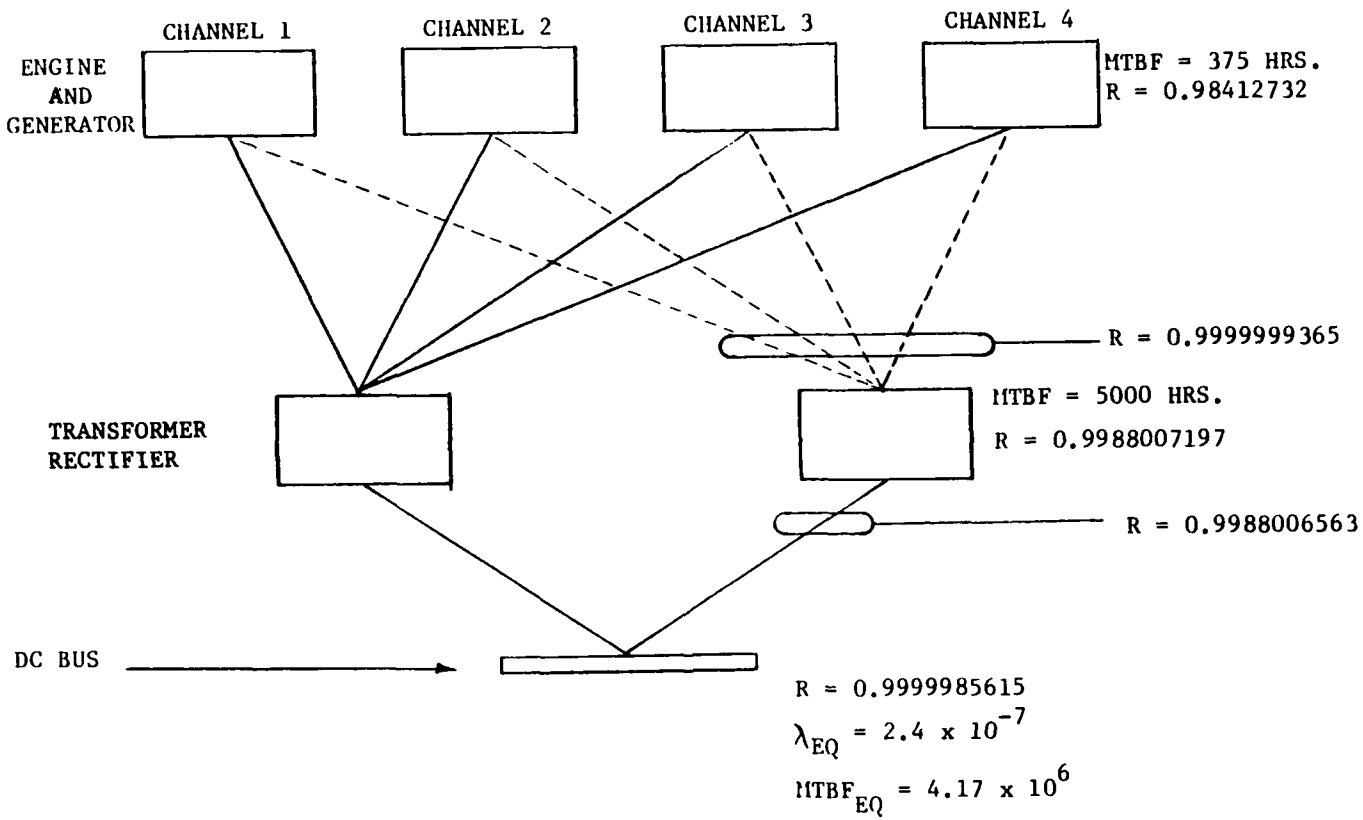

FIGURE 28C - MAIN POWER SYSTEM - OPTION 3 ~ FOUR GENERATORS, TWO T/R UNITS, AC CROSS-STRAPPING

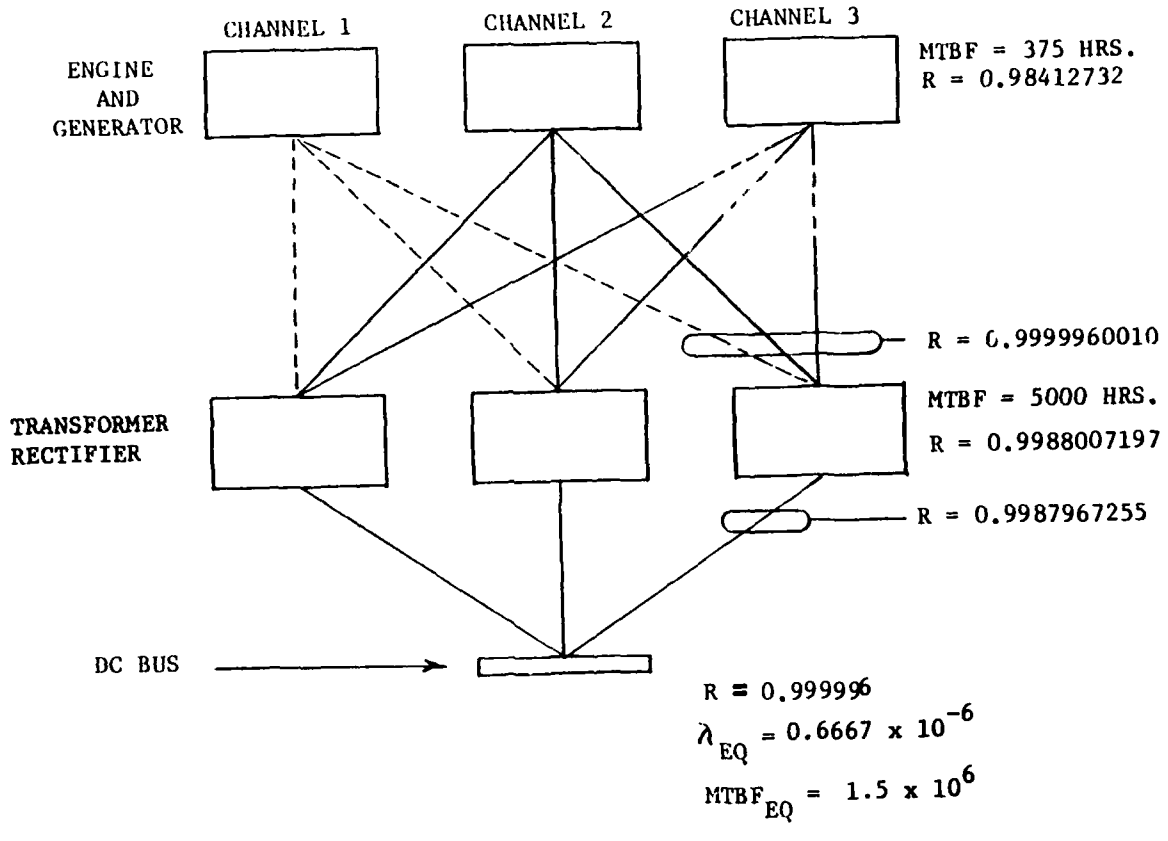

FIGURE 28D - MAIN POWER SYSTEM - OPTION 4 ~ THREE GENERATORS, THREE T/R UNITS, AC CROSS-STRAPPING

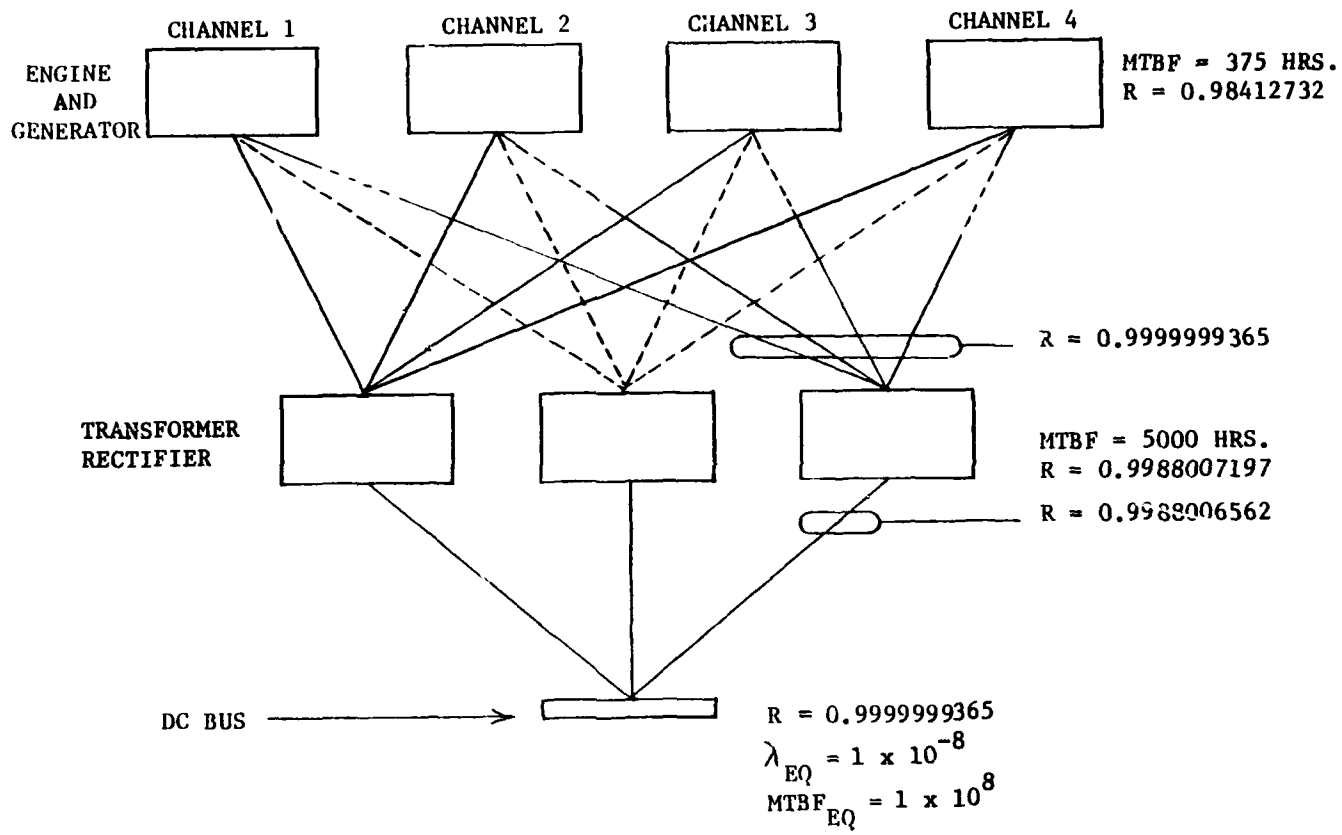

FIGURE 28E - MAIN POWER SYSTEM - OPTION 5 - FOUR GENERATORS, THREE T/R UNITS, AC CROSS-STRAPPING

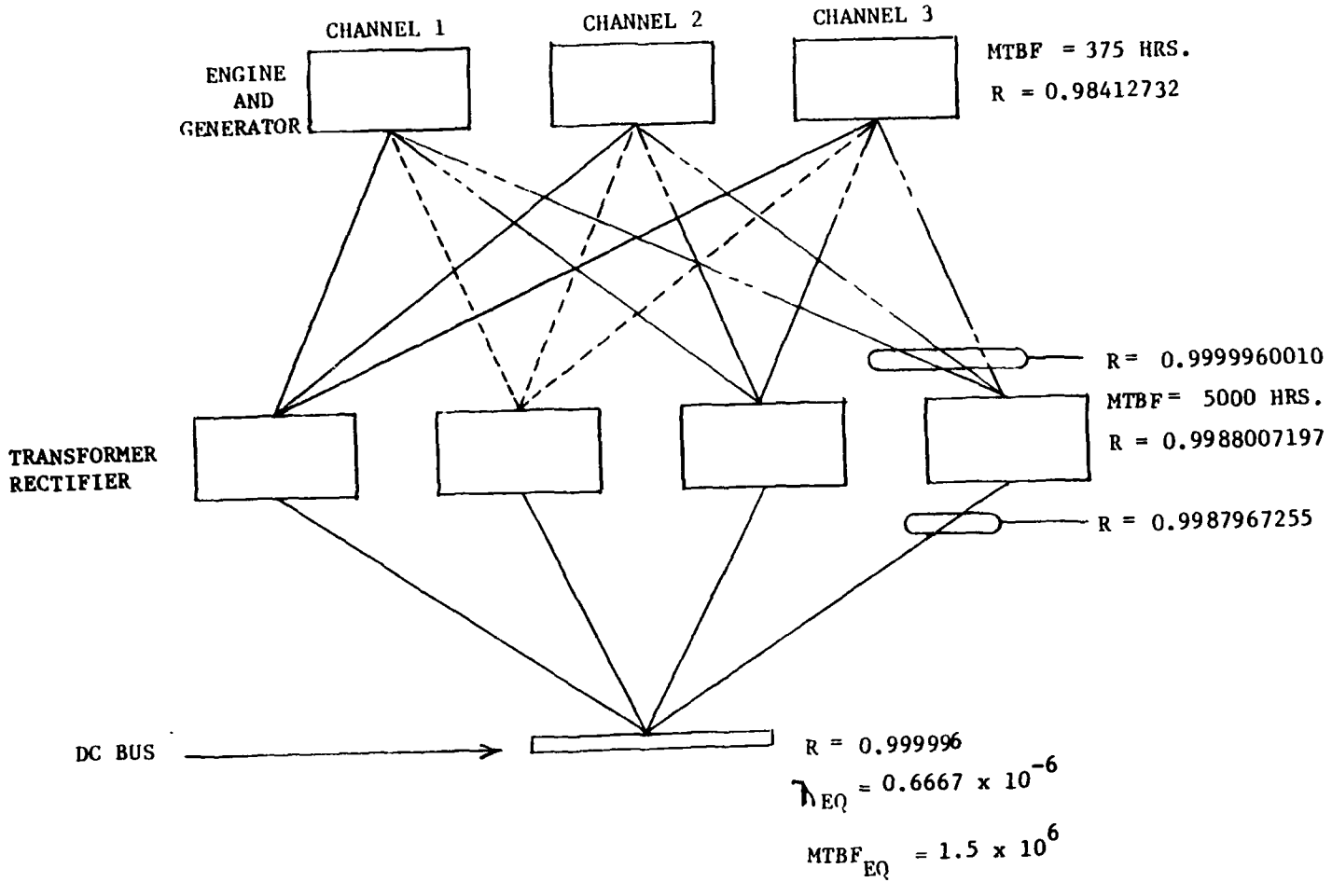

FIGURE 28F MAIN POWER SYSTEM - OPTION 6
THREE GENERATORS, FOUR T/R UNITS, AC CROSS-STRAPPING

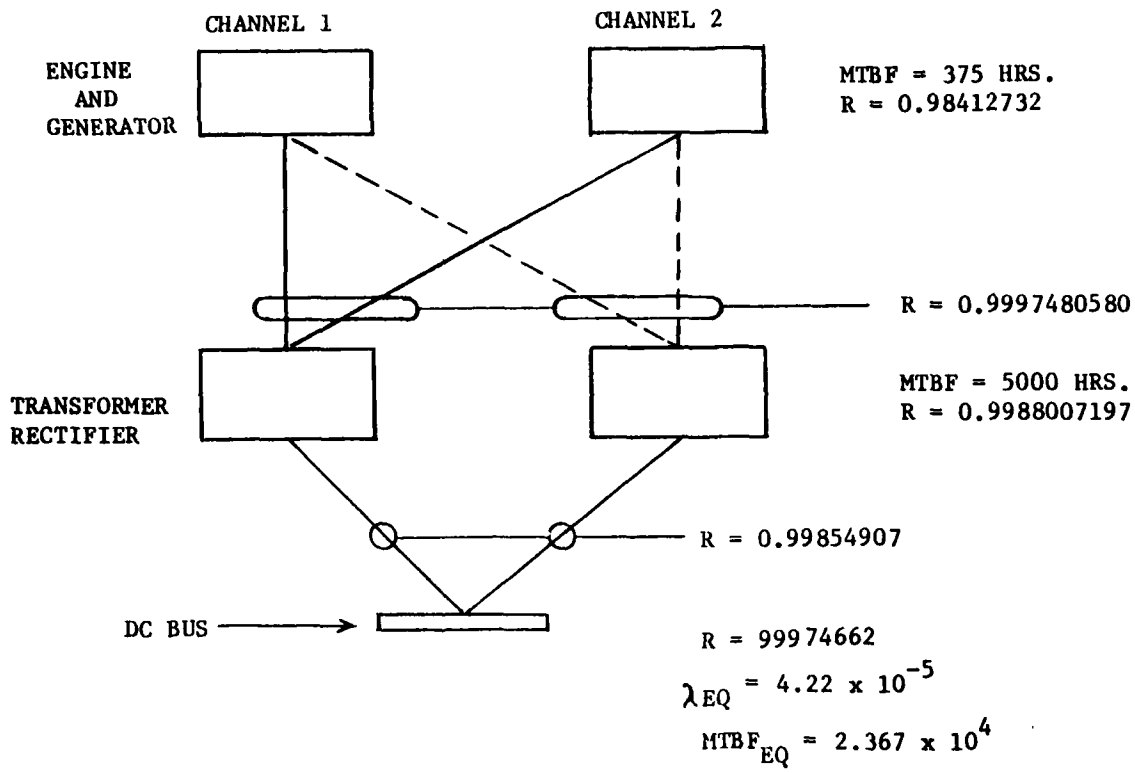

FIGURE 28G - MAIN POWER SYSTEM - OPTION 7
TWO GENERATORS, TWO T/R UNITS, AC CROSS-STRAPPING

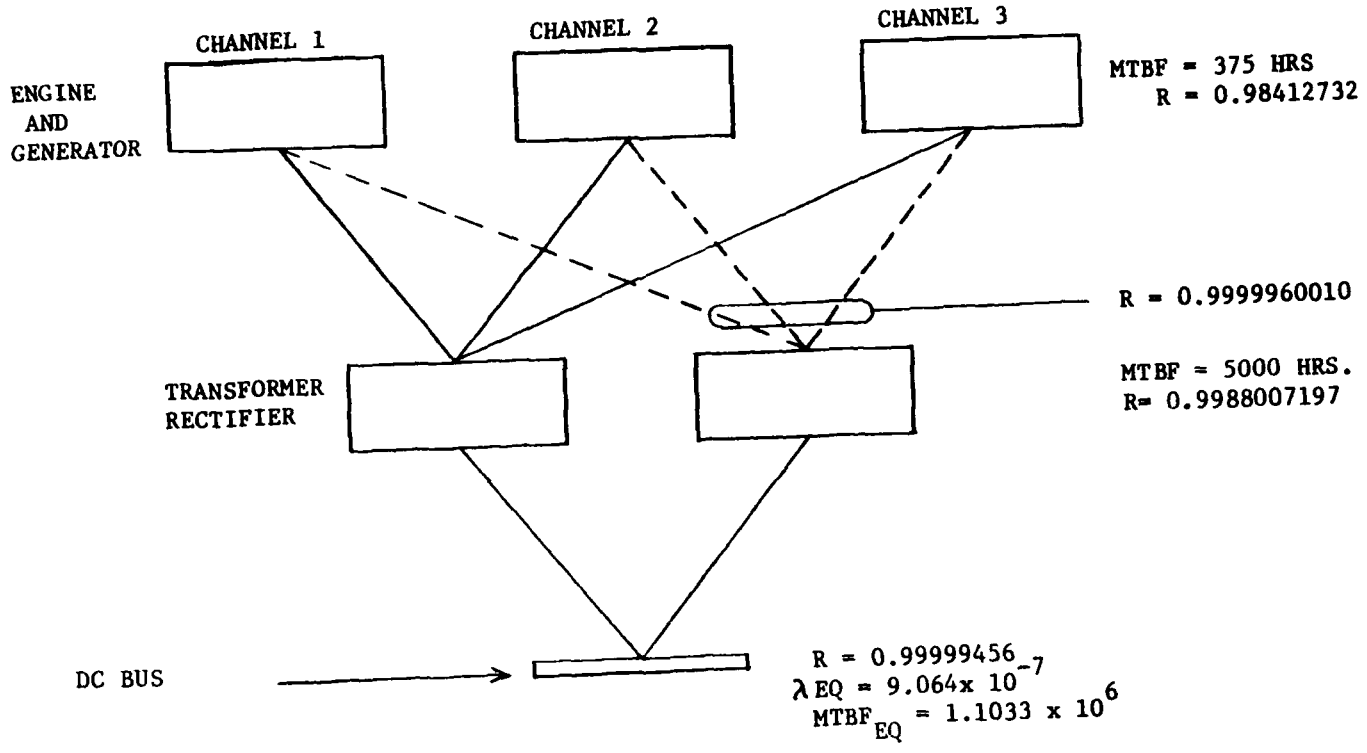

FIGURE 28H - MAIN POWER SYSTEM - OPTION 8
THREE GENERATORS, TWO T/R UNITS, AC CROSS-STRAPPING

TABLE 21

MAIN PRIMARY (AC) POWER SYSTEM
RELIABILITY MATRIX

(INCLUDING ENGINE FAILURES)

OPTION	SYSTEM ARRANGEMENT	RELIABILITY PARAMETERS		
		PROB OF MISSION SUCCESS	λ EQUIV. (FAILURES/10^6 HOURS)	MTBF EQUIV (HOURS)
1	4 GEN, NO AC CROSS-STRAPPING	0.9999999365	0.01058	9.45×10^7
2, 3, 5	4 GEN, AC CROSS-STRAPPING	0.9999999365	0.01058	9.45×10^7
4, 6, 8	3 GEN, AC CROSS-STRAPPING	0.9999960010	0.6665	1.50×10^6
7	2 GEN, AC CROSS-STRAPPING	0.9997480580	42.	2.38×10^4

system, the DC system reliability is determined virtually by the AC power system reliability and not by the power conversion hardware. When a two T/R unit secondary system is selected, an approximate 50 percent difference in overall power system reliability occurs. This difference becomes more prominent as the primary power system reliability improves. Figure 29 depicts this trend by plotting the DC power bus equivalent MTBF versus generator system MTBF. As shown at the 1000 hour MTBF used for the generator, a bus MTBF for the two T/R unit system is approximately 70 percent of the three T/R system MTBF. At 10,000 hour generator MTBF, the two T/R system MTBF decreases to 45 percent of the three T/R system. A similar relationship of increasing degradation would occur as the engine MTBF is increased from the 600 hour assumed base.

To maximize the improvement in bus reliability due to primary power system reliability improvement, a three T/R power conversion system is preferred over the dual T/R system.

Complete elimination of the secondary power busses should, however, be pursued.

Based solely on reliability trades, the main power system shown in Figure 30 is the best for the four engine aircraft and easily meets the nominal mission completion probability of 0.9998. Significantly higher or lower mission completion requirements from those assumed will influence the recommended configuration for any specific aircraft application. It is noted that the mission completion probability of 0.999996 is conservative in comparison with other critical aircraft subsystems such as fuel transfer, hydraulics, propulsion, structures, etc. Finally, the number of channels used on a four engine aircraft is influenced by factors other than reliability. The reliability requirement, however, does establish the lower limit on generator

TABLE 22

MAIN SECONDARY (DC) POWER SYSTEM
RELIABILITY MATRIX

(INCLUDING ENGINE FAILURES)

OPTION	SYSTEM ARRANGEMENT	RELIABILITY PARAMETERS		
		PROB OF MISSION SUCCESS	λ EQUIV (FAILURES/10^6 HRS.)	MT BF EQUIV (HOURS)
1	4 GEN, 4 T/R UNITS NO AC CROSS-STRAPPING	0.9999999154	.01409	7.095×10^7
2	4 GEN, 4 T/R UNITS AC CROSS-STRAPPING	0.9999999365	0.01	1×10^8
3	4 GEN, TWO T/R UNITS CROSS-STRAPPING	0.9999985615	0.24	4.17×10^6
4	3 GEN, 3 T/R UNITS CROSS-STRAPPING	0.999996	0.6667	1.5×10^6
5	4 GEN, 3 T/R UNITS CROSS-STRAPPING	0.9999999365	0.01	1.0×10^8
6	3 GEN, 4 T/R UNITS CROSS-STRAPPING	0.999996	0.6667	1.5×10^6
7	2 GEN, 2 T/R UNITS CROSS-STRAPPING	0.99974662	42.2	2.367×10^4
8	3 GEN, 2 T/R UNITS CROSS-STRAPPING	0.99999456	0.906	1.1×10^6

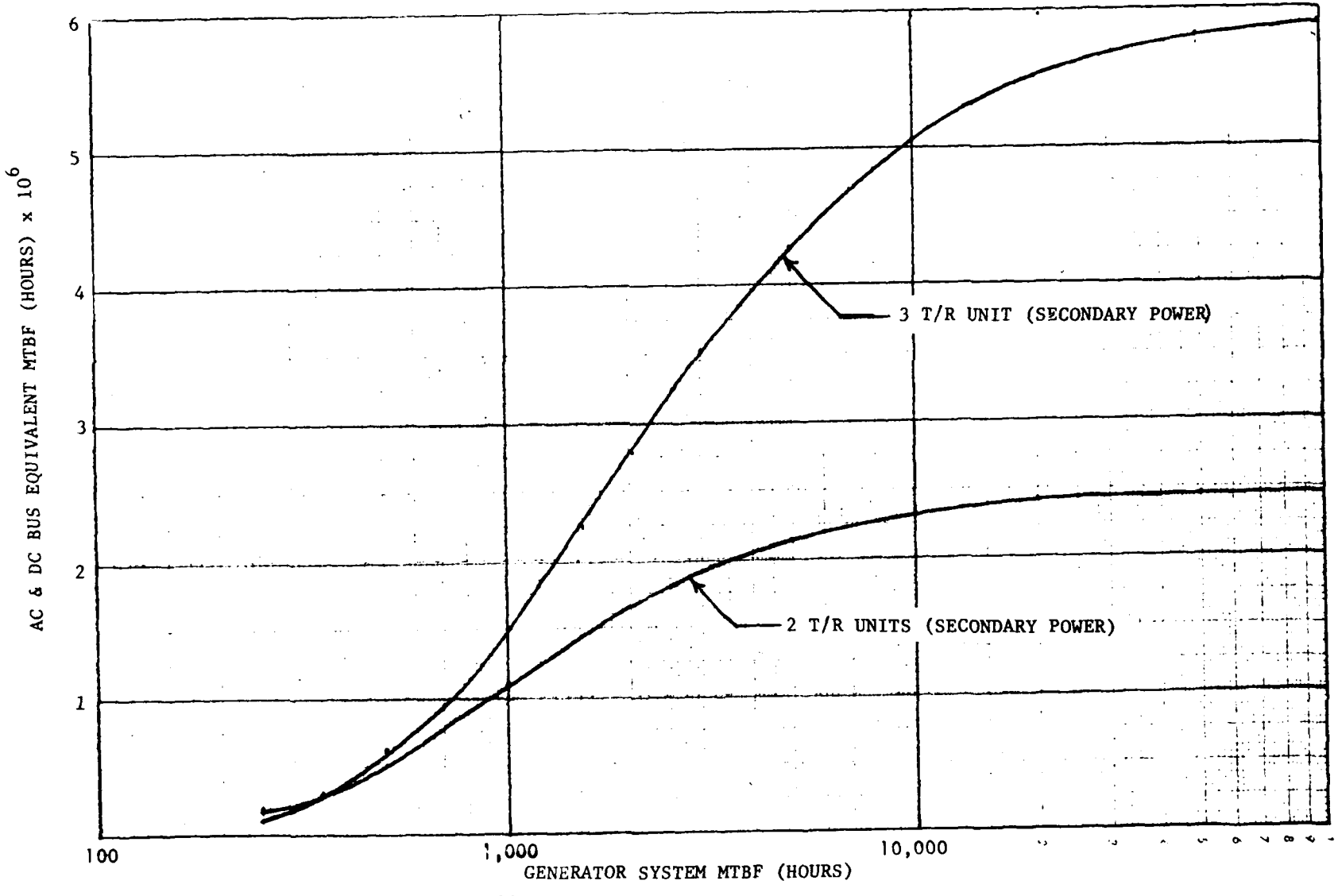

FIGURE 29 POWER BUS MTBF VS GENERATING SYSTEM MTBF

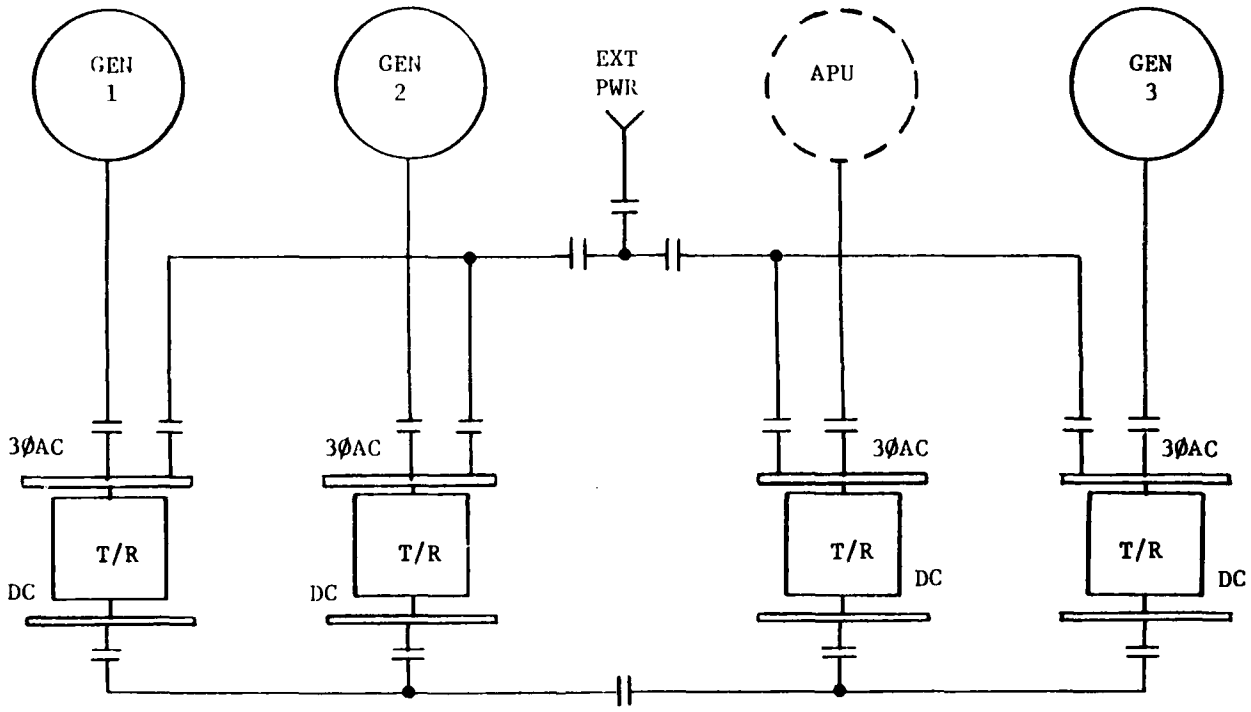

FIGURE 30 - BEST MAIN POWER SYSTEM CONFIGURATION BASED ON RELIABILITY ASSESSMENT

quantities. The upper limit on generator quantities is influenced by such factors as:

- Aircraft weight and balance restrictions.
- Available installation space.
- Type of engine starting system (electric start may imply starter/generator on each engine).
- Electric load

For these reasons, any optimum generating system is subject to change with each specific aircraft application or mission.

Single Engine System

A reliability assessment was also made on a single engine power generation system. Since only one main prime mover (engine) is available in this aircraft class, the number of generator system configurations is minimal. Figure 31 illustrates a reliability block diagram for the only reasonable hardware configuration. This diagram depicts the system interrelationships for both the main and emergency power sources. The top reliability block in each of the two subsystems contains the generator hardware plus the prime mover. The prime mover for the main system is the aircraft engine. This prime mover has an assumed MTBF of 600 hours. The emergency system prime mover is an APU with a 1000 hour MTBF. As shown in the figure, the probability of mission success (main generating system) is slightly short of the 0.995 goal defined in paragraph 3.1. This low reliability is due primarily to the "low" engine MTBF of 600 hours. With this engine MTBF, a generator system MTBF of 7228 hours minimum (likely attainable) is required to meet the 0.995 requirement. Likewise, with a generator MTBF of 1000 hours, the engine MTBF would need to be greater than 1242 hours to provide the 0.995

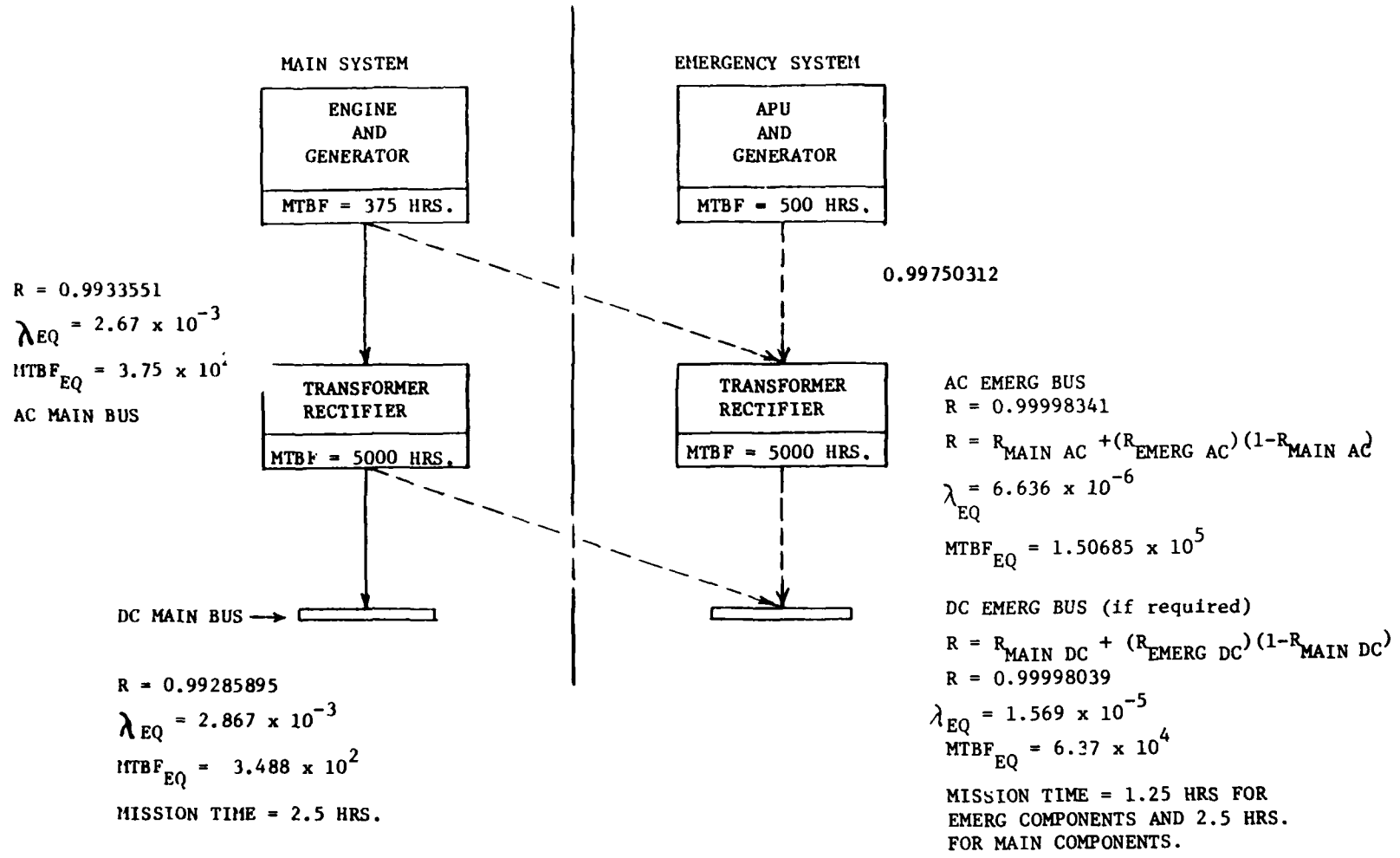

FIGURE 31 MAIN AND EMERGENCY POWER SYSTEM - SINGLE ENGINE AIRCRAFT

reliability. It should also be noted that with a 1000 hour MTBF generating system, the main electrical system reliability is 0.997 when the engine failures are excluded.

As also illustrated in Figure 31, the probability of safe return (emergency system) is well within the 0.9998 goal with an estimated reliability of 0.99998039.

5.2.2 POWER TO UTILIZATION EQUIPMENT

In order to establish the reliability for delivering power to the utilization equipment, the level of reliability degradation imposed by the power distribution system needs to be determined. This degradation, however, is a direct function of the number of systems or circuits required for aircraft safe return and mission completion. A simplified estimate of this degradation is derived by assuming a linear relationship between power distribution failure rate and the number of circuits required. This simplification is reasonable if any failures from common hardware such as EMUX processors, data buses, etc., are accounted for at the bus management level. The linear estimate also assumes that an "average" power distribution circuit can be defined to determine a representative failure rate per circuit. Figure 32 illustrates reliability block diagrams for representative conventional and advanced technology (solid state) power distribution circuits. Figure 33 is a plot of power distribution system reliability versus the quantity of circuits. Estimated circuit quantities required for aircraft safe return and mission completion circuits for a single engine a a multiple (four) engine aircraft are identified on the figure. The point estimates yield the reliability requirements for the power distribution systems shown in Table 23. The probability [illegible] delivering power to loads can now be calculated by

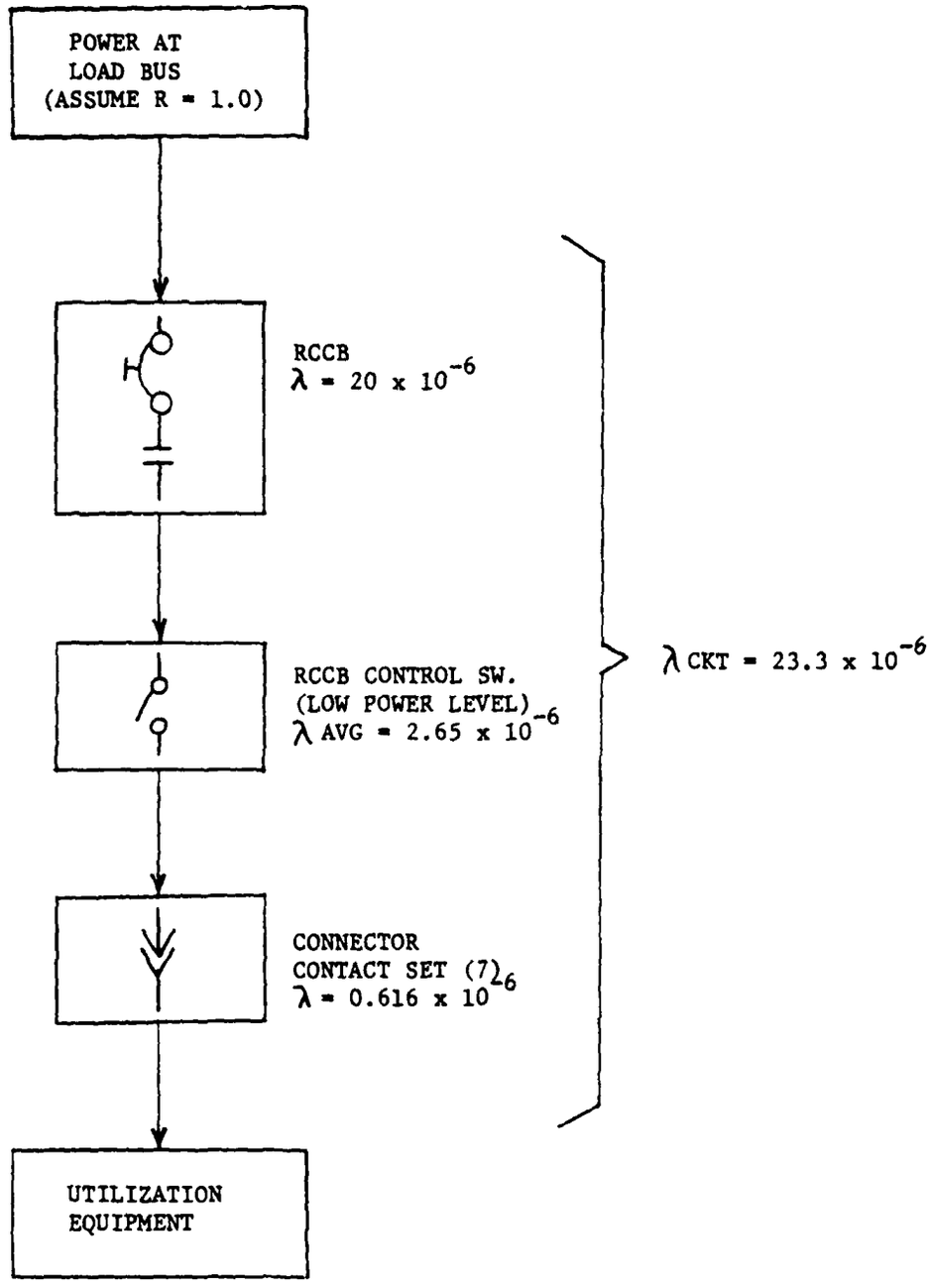

FIGURE 32A RELIABILITY DIAGRAM OF TYPICAL CONVENTIONAL POWER DISTRIBUTION SYSTEM

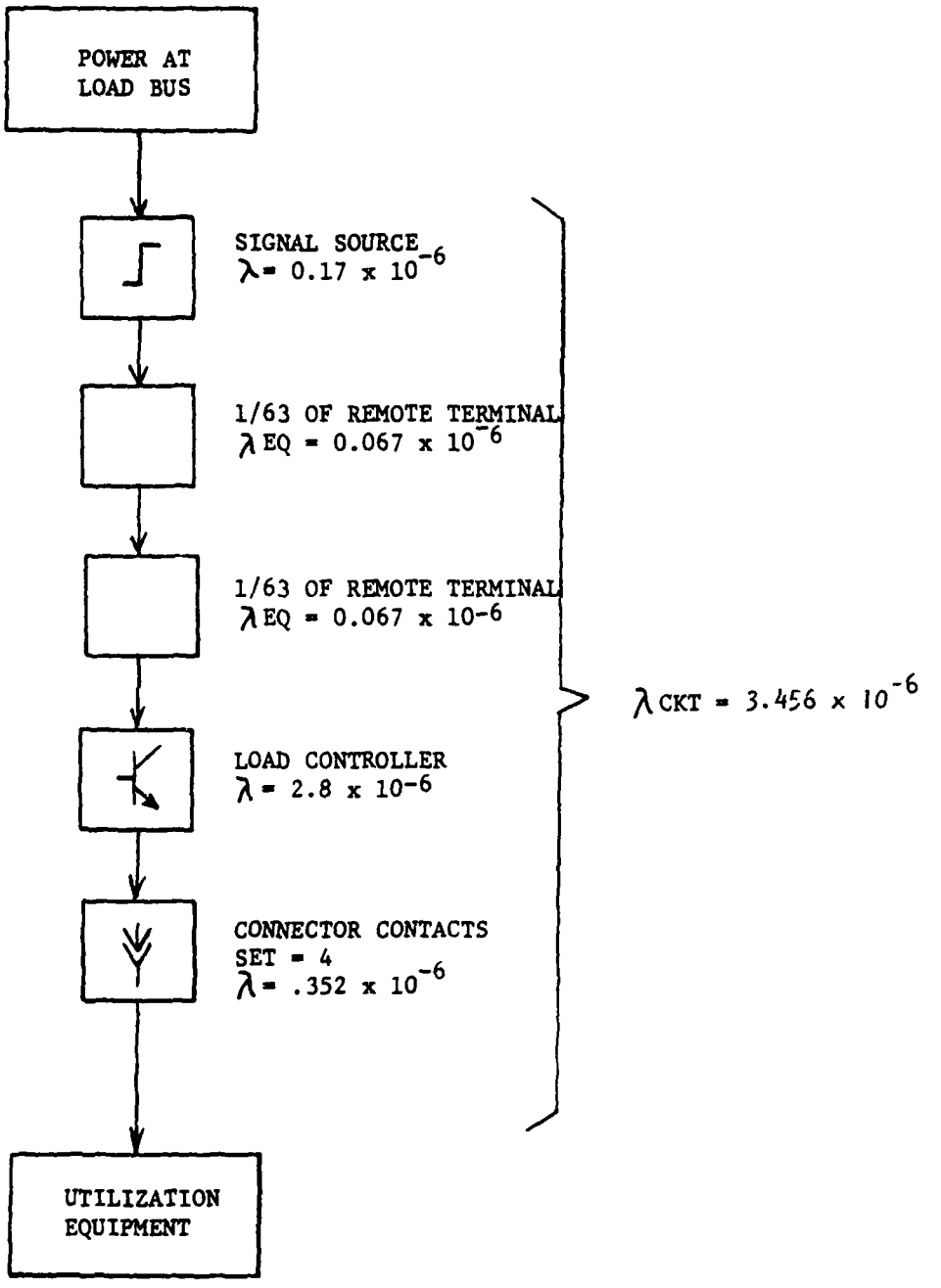

FIGURE 32B RELIABILITY DIAGRAM OF TYPICAL ADVANCED TECHNOLOGY POWER DISTRIBUTION CIRCUIT

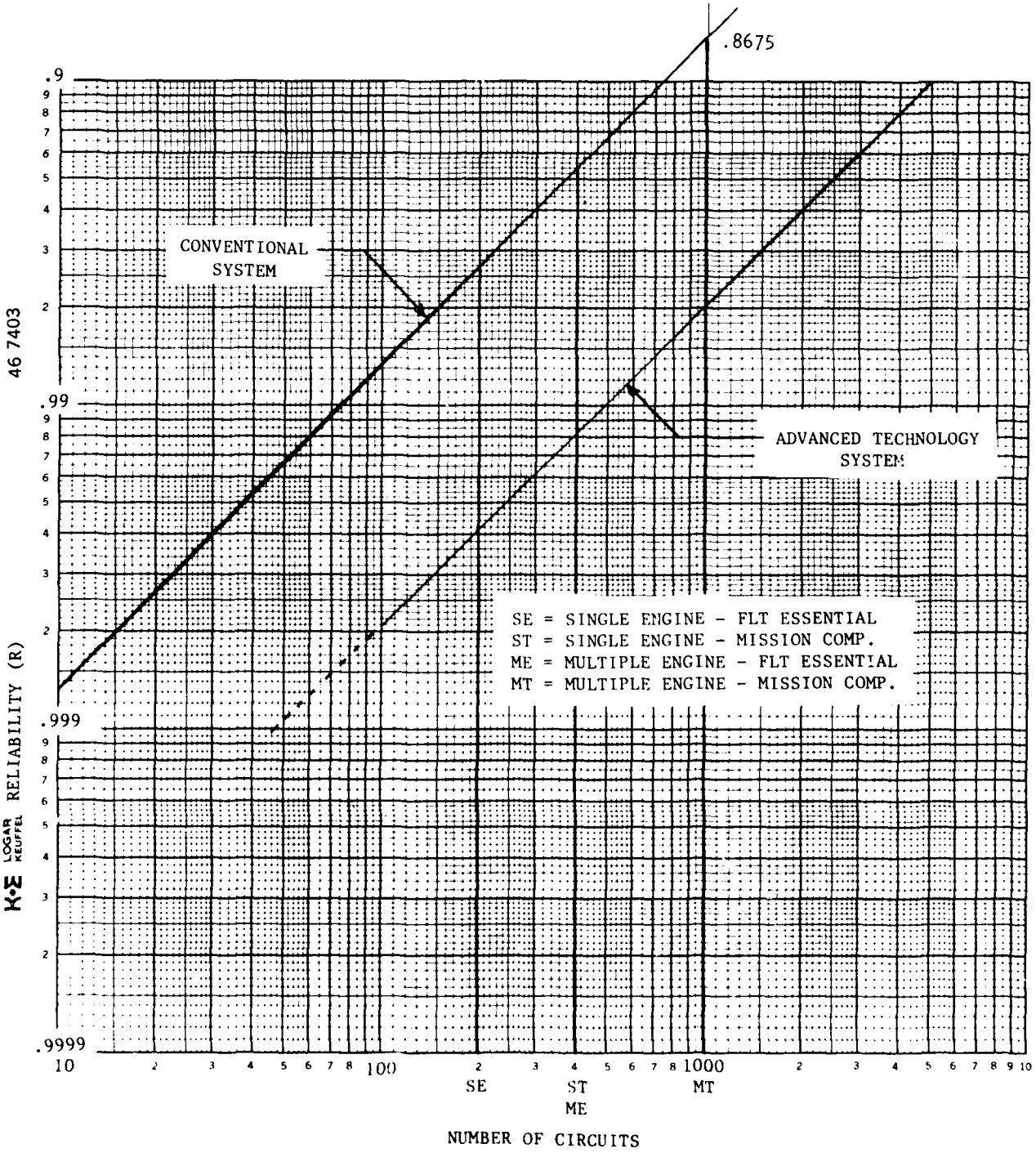

FIGURE 33 POWER DISTRIBUTION SYSTEM RELIABILITY

TABLE 23

POWER SYSTEM RELIABILITY REQUIREMENTS SUMMARY

SYSTEM CONFIGURATION		POWER AT BUSSES(A)	POWER DISTRIBUTION(B)		POWER TO ALL LOADS(C)	
			CONVENTIONAL	ADV. TECH	CONVENTIONAL	ADV. TECH.
SINGLE ENGINE (OPERATE TIME 2.5 HOURS)	SAFE RECOVERY	0.9998	0.9893	0.9984	0.9891	0.9982
	MISSION COMPLETION	0.995	0.9788	0.9967	0.9739	0.9918
MULTIPLE ENGINE (OPERATE TIME 6 HOURS)	SAFE RECOVERY	0.999995	0.9456	0.9915	0.9455	0.9913
	MISSION COMPLETION	0.9998	0.8675	0.9790	0.8673	0.9788

C = A x B

combining the reliability of the distribution system with the reliability of power at the buses. These values are shown in Table 23. It should be emphasized that the reliability values shown in Table 23 apply to supplying power to all the loads. The table also shows the improved reliability of the advanced technology power distribution system over the conventional system, especially when mission time is long as is typical for multi-engine aircraft.

5.2.3 FLY-BY-WIRE SYSTEMS

Fly-by-wire aircraft depend on the electrical power system for flight control which requires higher reliability and much faster transfer to backup power. In general, a power system for a fly-by-wire aircraft consists of:

- Main generator(s) installed on the engine pad with the generator(s) rated for total electrical load.
- An APU driven generator for emergency power.
- A battery power source for the time period between main power loss and start-up of the APU system or for added reliability through redundancy.

A gross analysis of the general level of power system reliability that can be expected from this arrangement for a single engine aircraft is shown in Figure 34. This analysis assumes ballpark component MTBF's of 1000 hours for the generator (including GCUs) and the APU, and an estimated 100,000 hour MTBF for in-flight loss of engine rotation. In addition, a 2.5 hour mission time is assumed for the single engine system. As shown on the figure, electrical power should be available with a probability of 0.99999998. This probability does not account for a momentary power loss which will occur during switchover from main to the APU in the event of a main power loss. The purpose of the battery power source is to maintain power during this switchover period. The

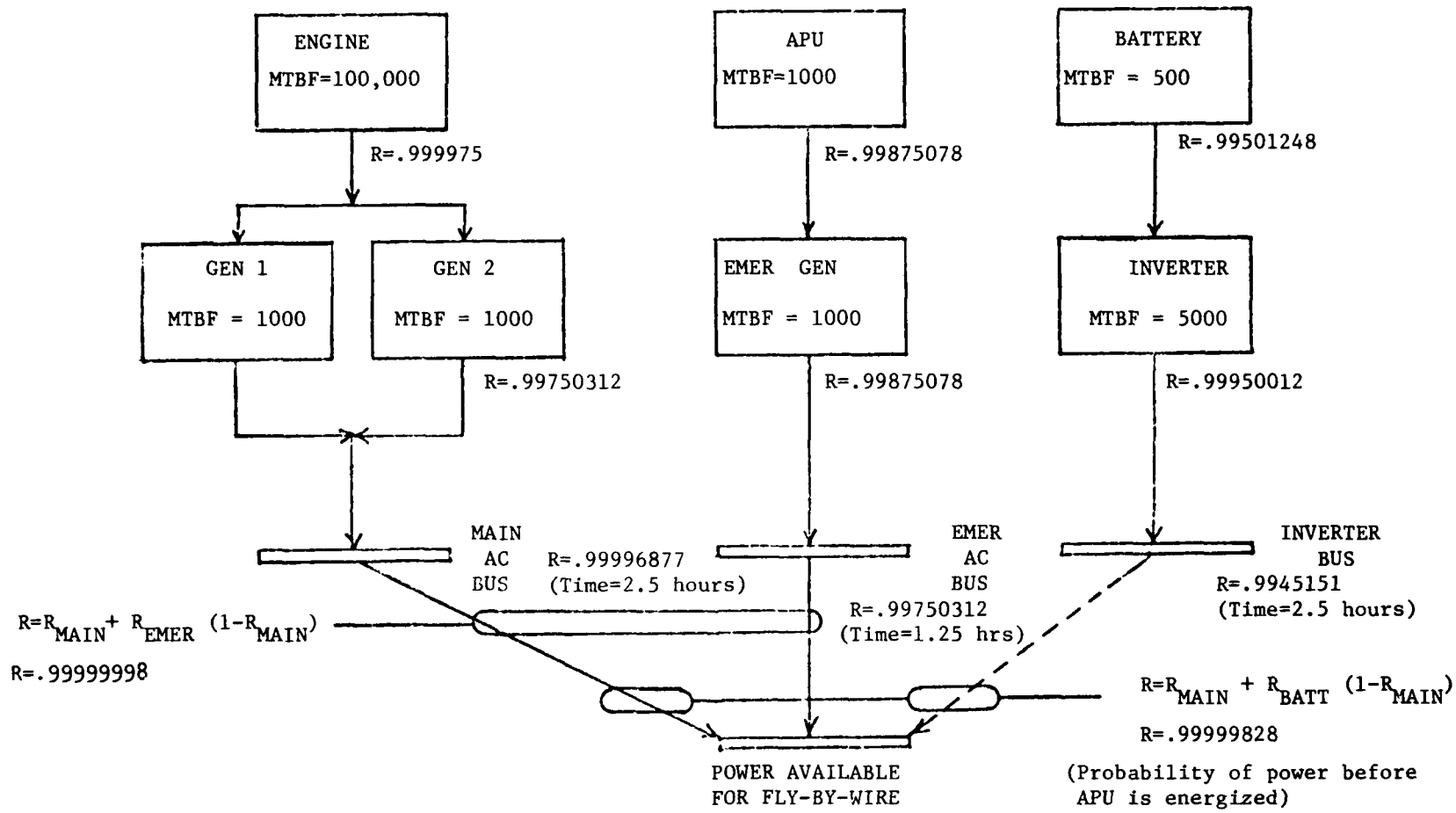

FIGURE 34 RELIABILITY BLOCK DIAGRAM FOR SINGLE ENGINE FLY-BY-WIRE CONFIGURATION

probability that power is available either from the main source or from the battery/inverter source is 0.99999983 as shown in the figure. This probability will reduce if the APU start-up time is extended or if the APU fails to start.

Equating these probabilities to FBW requirements results in the following:

- MIL-F-9490 requires a maximum aircraft loss rate due to flight control system (or supporting subsystem) failures of 100 x 10^{-7} losses per flight hour for MIL-F-8785 Class I, II or IV aircraft. (Most single engine aircraft are Class IV.) This loss rate equates to an equivalent MTBF of 100,000 hours.
- If one assumes that the power system reliability should be at least an order of magnitude higher than the flight control system, then an electrical power equivalent MTBF of 1,000,000 hours is required.
- For the 2.5 hour defined mission time, the 10^6 hour MTBF equates to a power system reliability requirement of 0.9999975. This level is within the 0.999999 probability derived for the system configuration shown in Figure 34.

The FBW reliability requirements for Class III (heavy bombers) aircraft are more stringent. For these multi-engine aircraft, a loss rate of less than 5 x 10^{-7} is required which equates to an equivalent MTBF of 2,000,000 hours. The electrical power for these aircraft requires a 2 x 10^7 hour equivalent MTBF or a reliability of 0.9999997 for a six hour mission. This level is attainable with a four channel system as can be seen in Table 21.

Another technique for improving the reliability and assuring "no-gap" power is shown in Figure 35. Basically, redundant power distribution circuits are

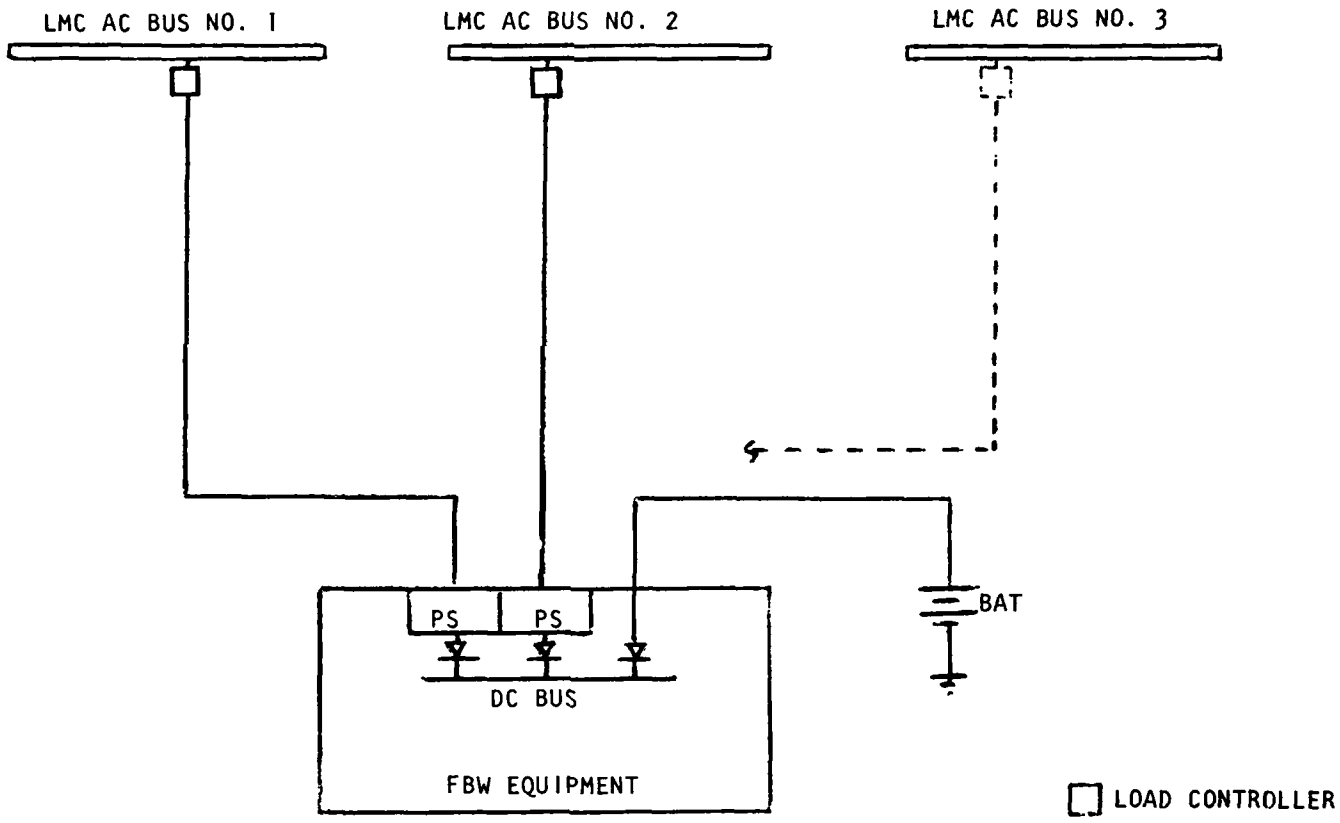

FIGURE 35 POWER DISTRIBUTION CIRCUIT REDUNDANCY

provided from two or more LMCs, depending on the reliability required. The FBW equipment contains an equal number of power supplies with their outputs diode isolated. A battery supply is provided to assure "no-gap" power in the event of momentary AC power interruptions and to assure safe return of aircraft in the event all AC power is lost.

5.3 EMUX PROCESSOR REDUNDANCY

An important factor concerning the electrical system configuration and design is establishing the appropriate level of EMUX processor redundancy required to meet specific requirements. This redundancy not only favorably impacts the probability of mission success and vulnerability but negatively impacts maintenance failure rate, weight, size and hardware cost.

To a large extent, the EMUX processor can be viewed as an equipment item of importance comparable to the electrical power sources. Loss of all EMUX processors results in the inability to deliver power to any load, even though power is available from the source.

The general design philosophy for a four engine aircraft power system can be summarized as:

(a) Mission completion capability is required after loss of one power channel whether due to a random failure or to battle damage.

(b) Safe return of aircraft capability is required after complete loss of the main power system (i.e., all main power channels). This capability is to be provided by an emergency power source independent of the primary power sources.

This design philosophy implies operation under a scenario wherein one power channel is lost due to random failure prior to reaching the target area. The mission can be continued due to the availability of adequate, reliable power from the other main power sources. If additional channels are lost as a result of random failure or battle damage, a decision on aborting the mission would be required. This decision would typically be based on the criticality of the mission and on the reliability and ulnerability of the remaining operational power channel(s) (none, one, two, etc., main power channels plus the emergency power channel).

By applying this same scenario and system design philosophy to the EMUX processors, an architecture is evolved which requires a minimum of three processors. This architecture accommodates two failures with sufficient capability to safely return the aircraft. Two candidate EMUX architectures applicable to a four engine aircraft are shown in Figure 36.

Figure 36A illustrates an integrated bus arrangement where each processor can control all aircraft electrical loads. This approach permits a minimum number of processors to provide the level of reliability required for mission completion and safe return of aircraft. This minimization is possible due to the complete level of operational backup provided by each processor.

In contrast, the split bus system shown in Figure 36B will inherently require more processors to achieve the same reliability level. Since each processor only controls a portion of the total electrical system, each processor does not provide the full system backup provided by the integrated bus implementation.

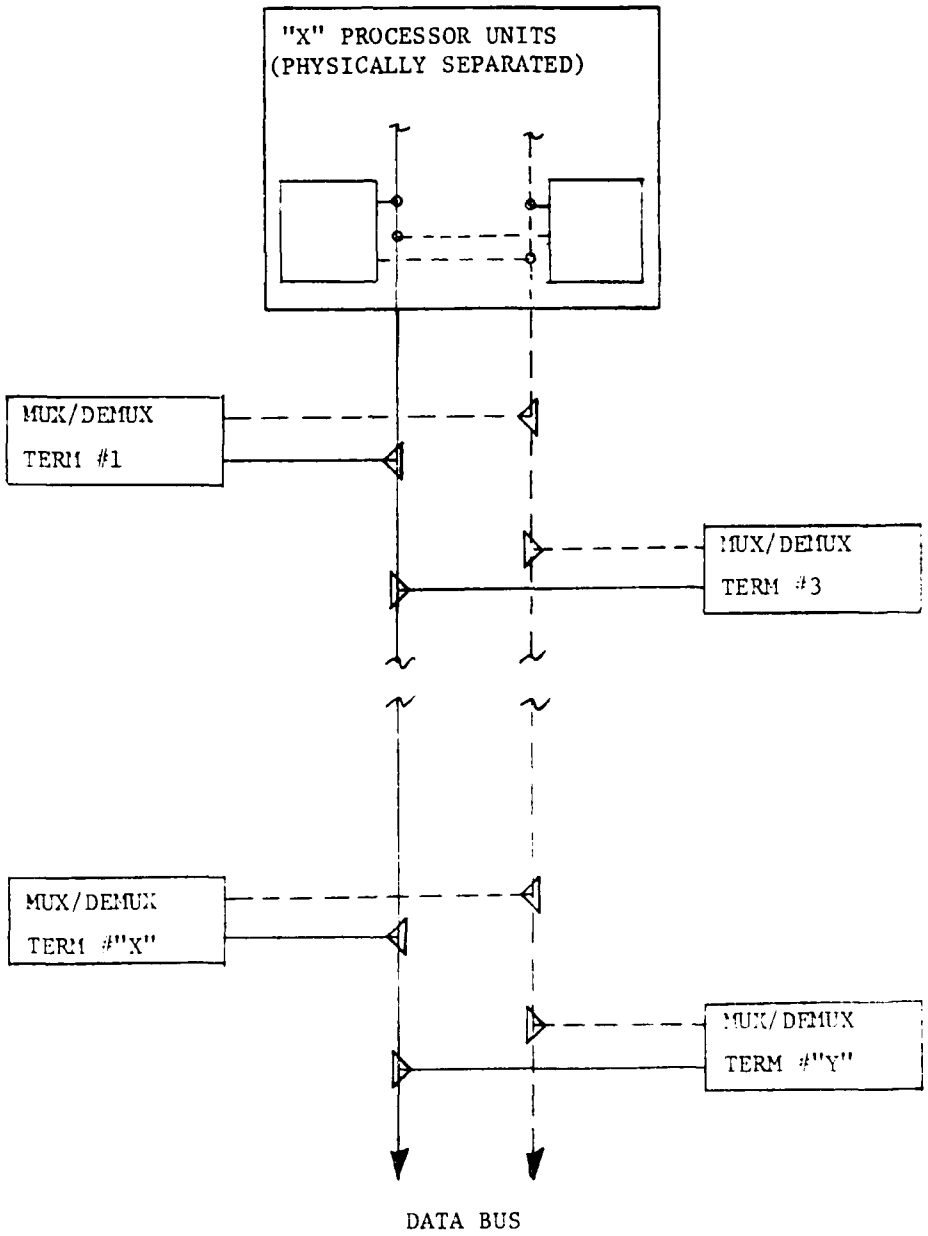

FIGURE 36A EMUX ARCHITECTURE OVERVIEW
INTEGRATED BUS SYSTEM

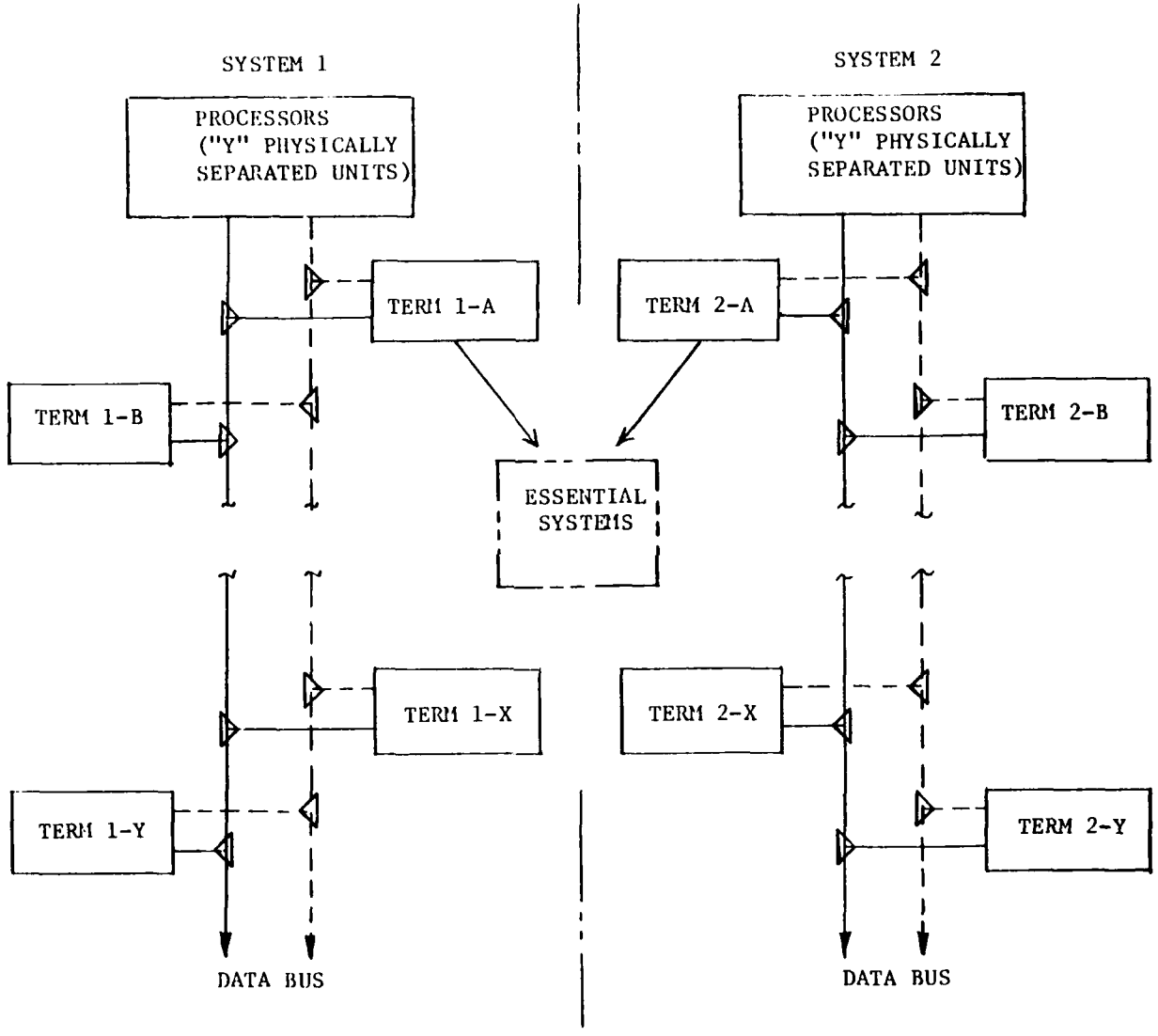

FIGURE 36B EMUX ARCHITECTURE OVERVIEW

SPLIT BUS SYSTEM

To minimize the need for adding additional processors to the split system and to improve the processor "safe return" failure rates, flight essential loads critical to safe return of the aircraft can be redundantly serviced from each of the split systems.

The selection decision between an integrated and a split data bus architecture is also influenced by (1) the number of data bus terminations required for the complete EMUX system and (2) the processor throughput time as impacted by the "work load" imposed on the processor.

The data bus termination quantity is a direct (although non-linear) function of the number of input/output channels available at each remote terminal and of the redundancy level desired for supplying power to critical subsystems. Likewise, the processor work load is a direct function of the number of EMUX controlled loads and of the complexity of this control.

The reliability impact on the EMUX as a function of processor quantities was analyzed for various operational scenarios. The assumptions used in the reliability analysis are:

(a) Operation time of six hours for mission completion. One hour of the six hours is spent in hostile territory.

(b) Operation time of 12 hours from take-off for safe return probabilities.

(c) Operation time of six hours for mission completion plus six hours for safe return.

(d) The effective failure rate of one processor providing proper data communication and processing over at least one of two data buses is 100 failures/10^6 per hour.

(e) Mission is aborted whenever only one processor remains operational.

(f) Battle damage to the processor, if it occcurs, will fail processor as soon as hostile territory is entered (i.e., five hours after take-off).

Figures 37 and 38 depict reliability block diagram overviews for the cases analyzed. Table 24 is a summary of the resulting reliability parameters.

As can be seen in the table, the two processor-integrated data bus system (Figure 36A) is unacceptable due to the zero mission completion probability after one failure. This zero probability is due to a procedural requirement to abort the mission to provide an acceptable level of safe return probability and not due to actual reliability predictions.

Table 25 compares EMUX bus/processor failure rates with the effective failure rate of two candidate main AC power system configurations. Assuming the three generator main power system is selected as the baseline, the three and four processor-integrated bus arrangements have, respectively, a three and four order of magnitude better reliability than the power generation system. A single order of magnitude higher reliability for EMUX is all that is necessary to eliminate any significant degradation of the overall power generation system.

The two processor-split bus configuration is marginal by this "order of magnitude" standard. This EMUX arrangement has a factor of five better reliability than the power generation system rather than the desired factor of ten. However, determination of whether the electrical system MTBF is significantly or sufficiently reduced to warrant a third processor in each of

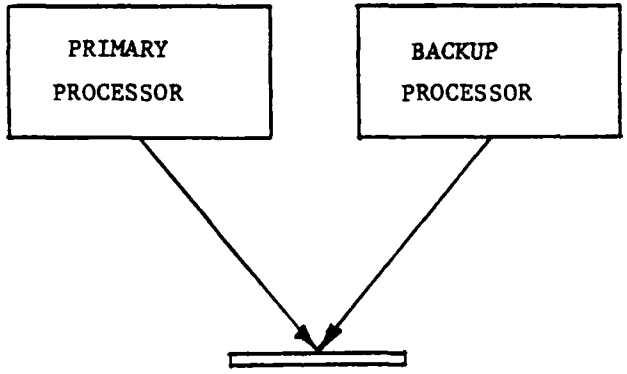

λ_{EFF} = 100 FAILURES/10^6 HRS PER PROCESSOR

P (MISSION COMPLETION/NO BATTLE DAMAGE) = P(2 PROC DURING 6 HOURS) = $(0.9994001799)^2$
= 0.9988007197

P (MISSION COMPLETION/BATTLE DAMAGE) = 0.0

P (SAFE RETURN/NO BATTLE DAMAGE) = P(1 OF 2 PROC DURING 12 HOURS) = 0.99999856

P (SAFE RETURN/BATTLE DAMAGE) = P(1 OF 2 PROC DURING 5 HOURS) $\times$ P(1 PROC DURING 7 HOURS)
= 0.99999975 $\times$ 0.99930025 = 0.9993

FIGURE 37A INTEGRATED BUS ARCHITECTURE - TWO PROCESSOR SYSTEM

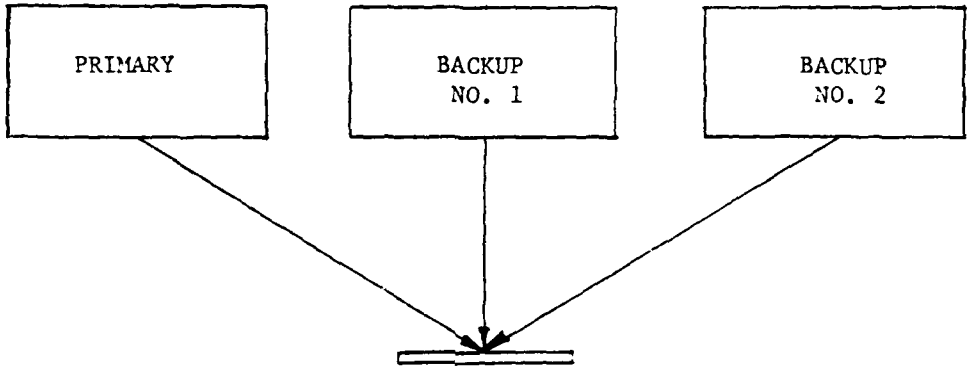

P (MISSION COMPLETION/NO BATTLE DAMAGE) = P(2 OF 3 PROC DURING 6 HOURS)
= 0.9999999982

P (MISSION COMPLETION/BATTLE DAMAGE) = P(2 OF 3 PROC DURING 5 HOURS) x P(2 PROC DURING 1 HOUR)
= 0.99999999990 x 0.9998000199
= 0.9998000189

P (SAFE RETURN/NO BATTLE DAMAGE) = P(1 OF 3 PROC DURING 12 HOURS)
= 0.9999999982

P (SAFE RETURN/BATTLE DAMAGE) = P(2 OF 3 PROC DURING 5 HOURS) x P(1 OF 2 PROC DURING 7 HOURS)
= 0.9999999990 x 0.9999995103
= 0.9999995093

FIGURE 37B INTEGRATED BUS ARCHITECTURE - THREE PROCESSOR SYSTEM

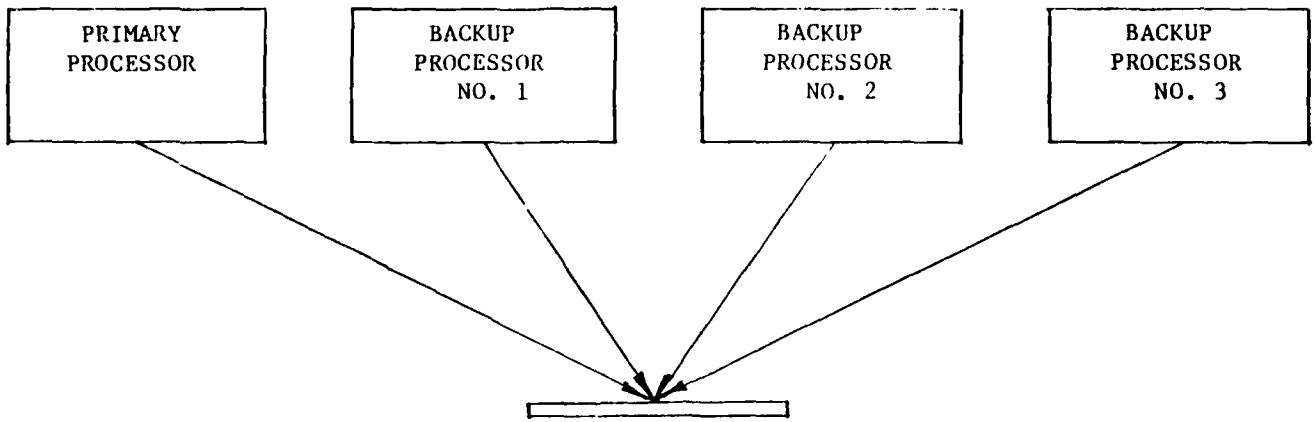

P (MISSION COMPLETION/NO BATTLE DAMAGE) = P(2 OF 4 PROC DURING 6 HOURS)
= 0.9999999999

P (MISSION COMPLETION/BATTLE DAMAGE) = P(3 OF 4 PROC DURING 5 HOURS) × P(2 OF 3 PROC DURING 1 HOUR)
= 0.9999999996 × 0.9999999800
= 0.9999999796

P (SAFE RETURN/NO BATTLE DAMAGE) = P(1 OF 4 PROC DURING 12 HOURS)
= 0.9999999999

P (SAFE RETURN/BATTLE DAMAGE) = P(3 OF 4 PROC DURING 5 HOURS) × P(1 OF 3 PROC DURING 7 HOURS)
= 0.9999999996 × 0.9999999996 = 0.9999999993

FIGURE 37C INTEGRATED BUS ARCHITECTURE - FOUR PROCESSOR SYSTEM

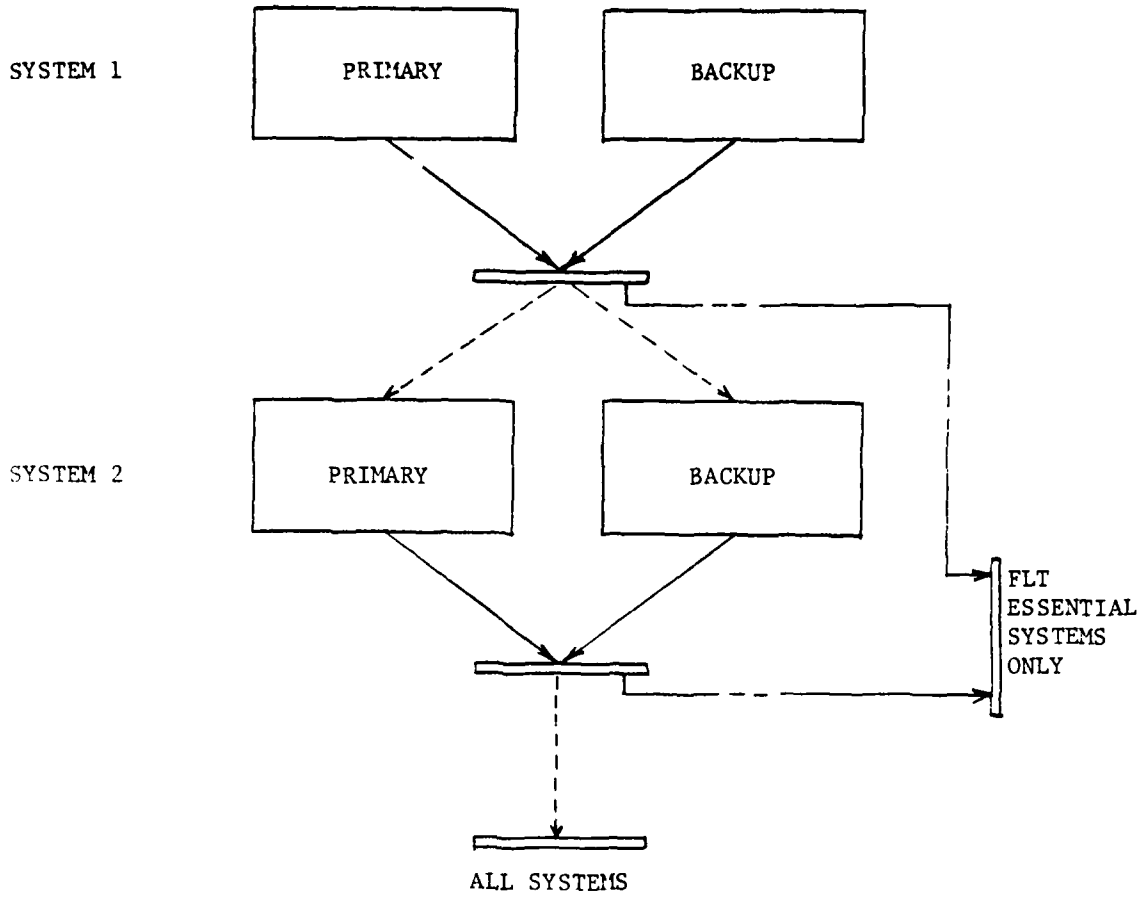

P (MISSION COMPLETION/NO BATTLE DAMAGE) = P(1 OF 2 PROC OF SYS 1 DURING 6 HOURS)
× P(1 OF 2 PROC OF SYS 2 DURING 6 HOURS)
$(0.9999996402)^2 = 0.9999992804$

P (MISSION COMPLETION/BATTLE DAMAGE) = P(1 OF 2 PROC OF SYS 1 DURING 5 HOURS)
× P (1 OF 2 PROC OF SYS 2 DURING 6 HOURS)
× P (1 OF 2 PROC OF SYS 1 DURING 1 HOUR)
× P (1 PROC OF SYS 2 ~ 1 HOUR)
= 0.9990004998 x 0.9999997501 x 0.9999999900 x 0.9999000049
= 0.9989003451

P (SAFE RETURN/NO BATTLE DAMAGE) = P(1 OF 4 PROC DURING 12 HOURS) 0.9999999999

P (SAFE RETURN/BATTLE DAMAGE) = P (1 OF 3 PROC DURING 12 HOURS) = 0.9999999982

FIGURE 38 SPLIT BUS ARCHITECTURE - FOUR PROCESSOR SYSTEM

TABLE 24

EMUX RELIABILITY COMPARISON BUS/PROCESSOR ARCHITECTURE

PROBABILITY FACTOR	INTEGRATED BUS			SPLIT BUS FOUR PROC.
	TWO PROC.	THREE PROC.	FOUR PROC.	
PROBABILITY OF COMPLETING MISSION GIVEN THAT NO BATTLE DAMAGE WILL OCCUR TO PROCESSORS	0.9988007197 (λeff = 0.02 failures/10^6 hours)	0.9999999982 (λeff = 300 failures/10^{12} hours)	0.9999999999 (λeff = 17.0 failures/10^{12} hours)	0.9999992804 (λeff = 0.12 failures/10^6 hours)
PROBABILITY OF COMPLETING MISSION GIVEN THAT BATTLE DAMAGE WILL OCCUR TO ONE PROCESSOR	0.0	0.9998000189 (λeff = 33.3 failures/10^6 hours)	0.9999999796 (λeff = 0.0034 failures/10^6 hours)	0.9989003451 (λeff = 183.4 failures/10^6 hours)
PROBABILITY OF SAFE RETURN GIVEN THAT NO BATTLE DAMAGE WILL OCCUR TO THE PROCESSORS	0.99999856 (λeff = 0.12 failures/10^6 hours)	0.9999999982 (λeff = 150 failures/10^{12} hours)	0.9999999999 (λeff = 8.3 failures/10^{12} hours)	0.9999999999 (λeff = 8.3 failures/10^{12} hours)
PROBABILITY OF SAFE RETURN GIVEN THAT BATTLE DAMAGE WILL OCCUR TO ONE PROCESSOR	0.9993 (λeff = 58 failures/10^6 hours)	0.9999995093 (λeff = 0.041 failures/10^6 hours)	0.9999999993 (λeff = 55.8 failures/10^{12} hours)	0.9999999982 (λeff = 150 failures/10^{12} hours)

TABLE 25

RELIABILITY COMPARISON OF MAIN POWER SOURCE AND PROCESSORS

SYSTEM	RELIABILITY PARAMETERS			MTBF COMPARISON (3 GEN=BASE)
	P (MISSION SUCCESS)	λ_{eff} (Failures/10^6 Hr)	$MTBF_{eff}$ (HOURS)	
FOUR AC GENERATOR SYSTEM	0.9999999365	0.01058	9.45×10^7	63.1
THREE AC GENERATOR SYSTEM	0.999996001	0.6665	1.50×10^6	1.0
THREE PROCESSOR INTEGRATED BUS	0.9999999982	3×10^{-4}	3.3×10^9	2,200
FOUR PROCESSOR INTEGRATED BUS	0.9999999999	17×10^{-6}	5.88×10^{10}	38,200
TWO PROCESSOR/BUS SPLIT BUS	0.9999992804	0.12	8.33×10^6	5.6

the split bus subsystems should be established based on the actual "reliability requirements" for a specific aircraft application. An estimate of the combined reliability of the three generator main power system plus the two processor split bus EMUX arrangement is 0.99999528 for probability of mission completion. This reliability level is sufficient for most applications and is comparable (conservative) to other critical aircraft subsystems.

In summary, for a typical four engine aircraft, either a three processor-integrator bus or a four processor-split bus EMUX system arrangement is sufficient in terms of reliability requirements. Some specific aircraft applications may, of course, require significantly higher mission completion requirements, and in turn result in a different system selection. It is also noted that selection of the three processor integrated bus arrangement would also imply the need for three data buses to meet the criteria that one failure not force aborting the mission. Requiring the processor to interface with three data buses results in a slight weight, volume and maintenance failure rate penalty.

The reliability for a single engine aircraft is that of a two processor system shown in Table 24. Note that there is no probability of completing the mission with the loss of one processor since the loss of the remaining processor would not allow safe return of the aircraft

5.4 ENGINE ELECTRIC START STUDY

A limited trade study was conducted to determine the feasibility of using the power generation system for starting the engine in addition to supplying power to electrical loads. The motor/generator function can be performed with

either the cycloconverter VSCF, DC-link VSCF, IDG or CSD technologies. As previously noted, the DC-link and CSD technologies are not considered viable systems for the 1990 time period, consequently were not evaluated for their engine start capabilities in this study.

5.4.1 CYCLOCONVERTER VSCF SYSTEM

The standard cycloconverter VSCF system can be adapted for the engine start function with the addition of a small amount of control circuits. The circuit modification is primarily in the field excitation area. In the generate mode of operation, the exciter functions as a synchronous generator and provides excitation for the main field. In the motor (start) mode, the exciter is reconnected and the system operates as a wound rotor induction motor. The "dual function" exciter circuit results in a substantial loss of MMF effectiveness and is the prime reason for approximately a 10% increase in system weight.

The system can provide starting torque with the machine operating as a synchronous motor or as a brushless DC motor. The performance of a brushless DC motor is similar to a brush type DC motor. The difference between the brush type DC motor and a synchronous motor is that the angle between field flux and armature current is fixed in the DC machine by the geometric relationship of brushes to the field, while this angle varies as a function of power excitation in the synchronous machine. Maximum power in a synchronous machine occurs when it is on the point of slipping out of synchronism and loss of synchronism results in loss of torque. On the other hand, the DC machine cannot slip out of step because brush position controls the angle. This makes the DC machine practical for operating at optimum torque. A requirement for operating the system equivalent to a brushless DC shunt motor is that the rotor

position must be known. This is accomplished with position sensors which monitor rotor position via the PMG field flux or other means.

A simplification of the system is accomplished by using a permanent magnet rotor machine which always supplies its own excitation. Also, the elimination of rotating rectifiers, rotor cooling components, rotor windings and losses and auxiliary exciters results in a machine with improved reliability and rotor life. The converter package, on the other hand, becomes more complex and results in some added weight. However, the advantages outweigh the disadvantages in applications requiring electric engine start capability. Figure 39 illustrates the comparison in complexity of the two concepts.

A potential application problem of the VSCF starter/generator system is the input power requirement. In the start mode, high currents are required, typically 1/3 higher than in the generate mode. Also the currents are drawn at very low power factors at the beginning of the start cycle and includes large harmonic currents. It is possible that the start power can not be used simultaneously for aircraft loads even with relatively large ground power carts; however, powr distortion of the VSCF starter generator is being reduced by improved circuit design. In aircraft equipped with a VSCF APU system having the same rating as the engine driven system, it may be necessary to inhibit the undervoltage protection circuit during the start mode since both systems will be operating in their overload ratings. Figure 40 shows typical start mode performance characteristics of a 60 KVA system.

5.4.2 IDG SYSTEM

An IDG system has the capability to supply torque in the reverse direction to start a turbine engine with some modification to the standard system. This

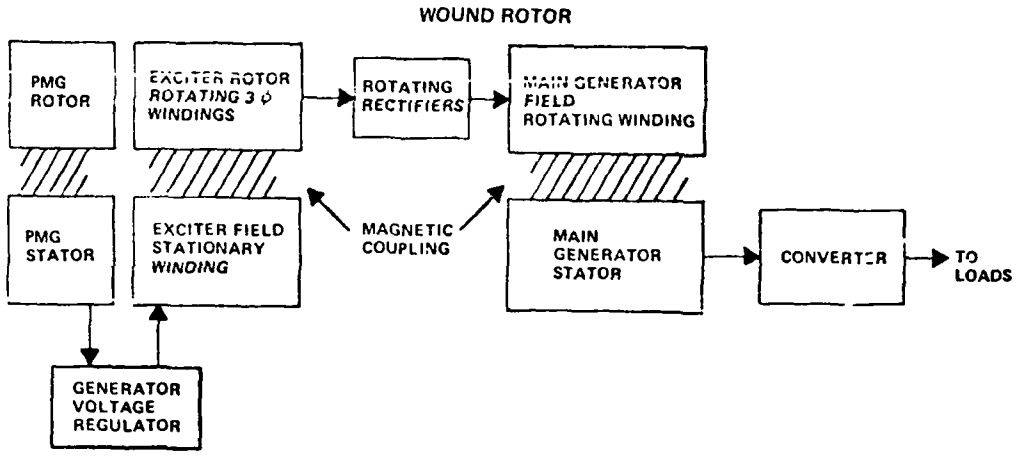

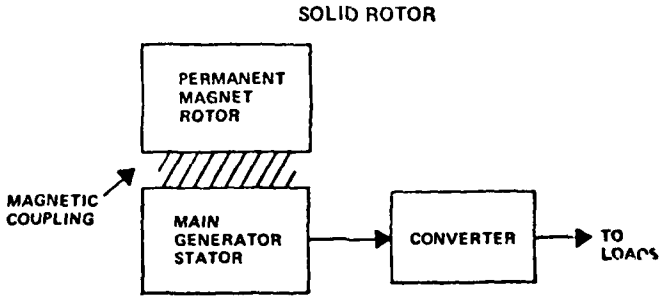

FIGURE 39 WOUND ROTOR VS SOLID ROTOR GENERATOR

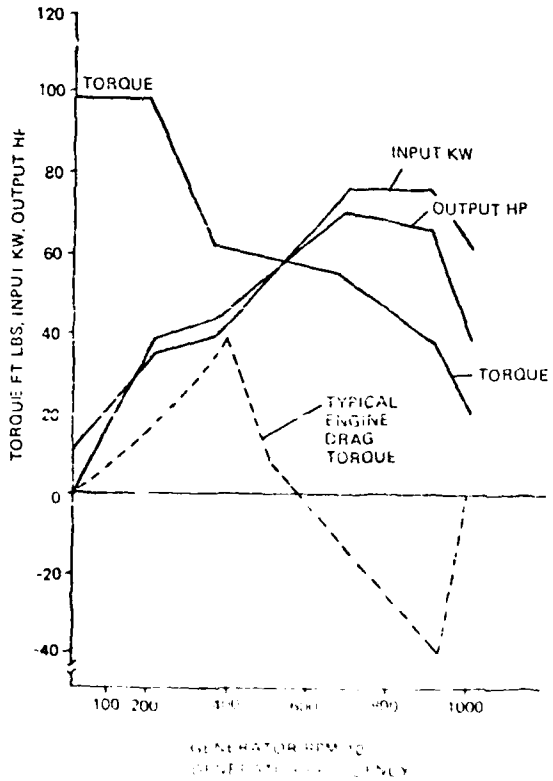

FIGURE 40 TYPICAL PERFORMANCE CHARACTERISTICS OF A 60 KVA VSCF STARTER/GENERATOR SYSTEM.

modification results in a weight penalty of approximately 10% of the basic system weight, i.e., similar to the VSCF system. Basically, the system operates as follows:

During the start cycle, the generator is brought up to speed as an induction motor. During this time, the reversable displacement pump of the drive is maintained at approximately zero stroke so that very little load is applied to the motor. During the time that the machine operates as an induction motor, the field is short circuited to prevent damage to the rectifiers. When the motor reaches rated speed, motor operation is electrically changed to that of a synchronous motor. When operating as a synchronous motor, the servo valve in the drive controls the hydraulic pump to provide constant maximum working pressure to supply the cranking torque. Cranking torque is maintained past the engine self-sustaining speed until starter cut-out speed is reached to minimize the acceleration time. While operating as a synchronous motor, the voltage regulator supplies an excitation level so that the power into the motor is as near to unity power factor as possible. When the underspeed point of the IDG is reached, the excitation is changed to generator operation.

To provide the starting mode operation, the starter/generator contains two additional protective functions over the standard IDG system.

(a) Reverse Current Protection - In the event the starter/generator does not obtain synchronous motor operation 3 to 5 seconds after the initiation of the start, the start is terminated.

(b) Start Sequence Protection - If after initiation of a start, the engine does not reach starter cut-out speed, the start is aborted. Starter cut-out should be reached within 30 to 60 seconds.

The IDG starter/generator system requires a constant frequency source of power for starting the engine. The quality of the electric power source is not distorted during the start cycle and the load imposed on the power source can be controlled in terms of KVA versus time. Since it is assumed the power source rating (APU driven generator or external power source) will be equal to the rating on the engine driven generator, the cranking load can be controlled so that the voltage will be within the limits defined for normal operation by MIL-STD-704. Utilization equipment can be connected to the start bus during the start cycle. It must be recognized that start loads exceeding 1.5 per unit rating (fast start conditions) will cause the voltage to fall below MIL-STD-704 normal limits. Figure 41 shows typical performance characteristics of an IDG starter/generator system.

5.4.3 WEIGHT TRADE-OFF

The quantitative analysis which follows was limited to a weight analysis only. In the interest of minimizing the complexity (and cost) of the analysis, a "standard" set of assumptions for the hardware was established for both the single and multiple engine applications. These assumptions are:

(a) The turbofan engine to be started is a 15,000 pound thrust class engine.

(b) A 60 KVA or larger main generating system is required for the electrical loads.

(c) The APU is rated at 60% (36 KVA) of the main electrical system rating for ground maintenance and emergency flight.

The weight analysis addresses penalties imposed on an aircraft for providing a self-start capability. For comparison purposes, the weight of a standard air turbine starter (non-self-starting) system is also shown.

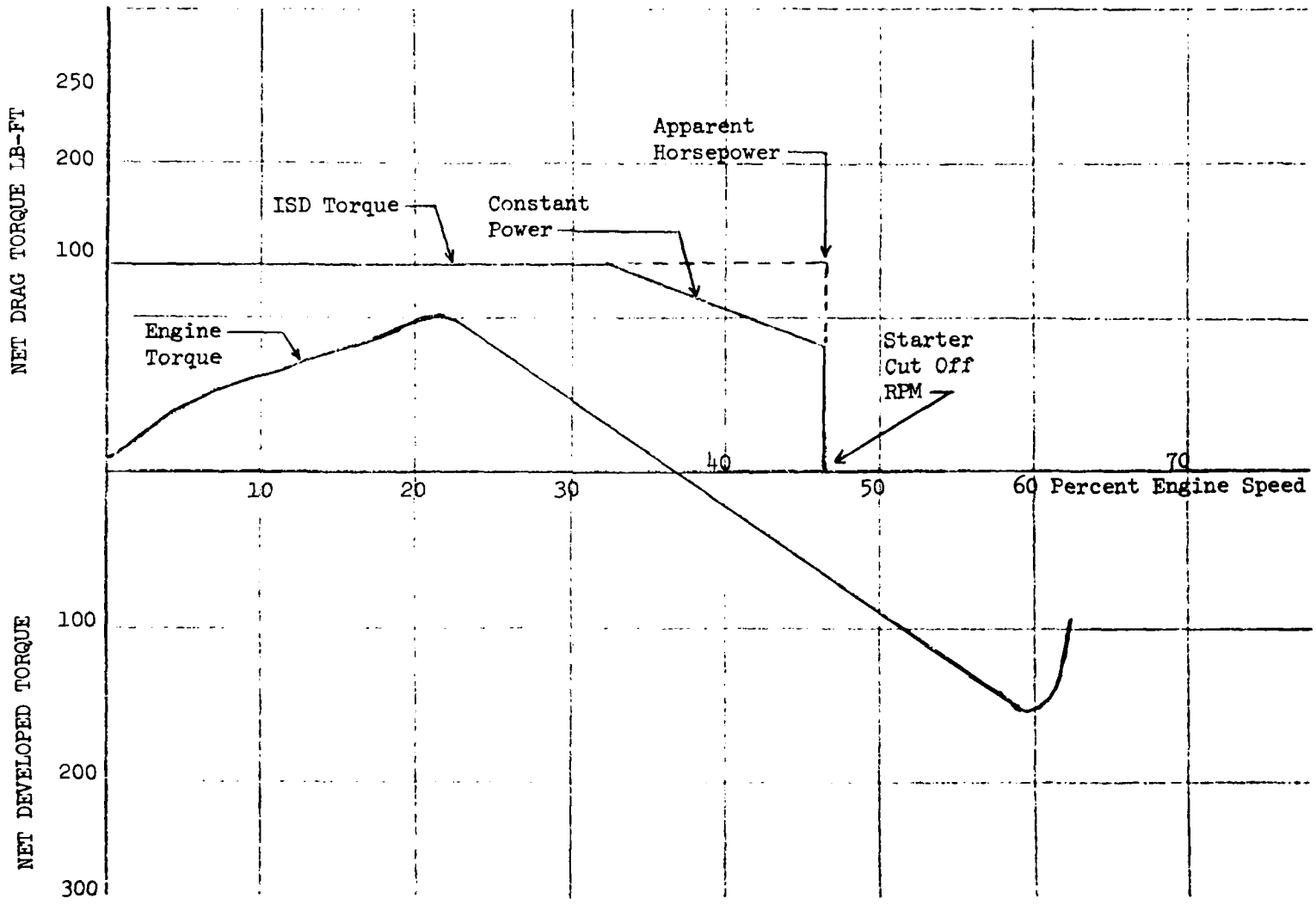

FIGURE 41 TYPICAL PERFORMANCE CHARACTERISTICS OF AN IDG STARTER/GENERATOR SYSTEM.

The weight data for the mechanical self-start option was derived from conventional electrically initiated jet fuel starters. This analysis, however, shouldn't be interpreted as indicating or implying that a jet fuel starter is the "best" mechanical self-starting system. Jet fuel starters, however, been shown in the past to provide a competitive self-start system and for this reason, was selected as a representative non-electrical starting system.

The VSCF and IDG starter/generator systems were assumed to provide the electric start capability with the same weight penalty, i.e., approximately 10% of system weight.

Single Engine Aircraft

Candidate self-starters were first analyzed for the single engine aircraft. The options studied are:

(a) A DC motor initiated jet fuel starter (mechanical start)

(b) A VSCF or IDG starter/generator (electrical start)

(c) An air turbine (non-self-start) starter

These options were analyzed for two aircraft configurations:

(a) Single engine aircraft with no Auxiliary Power Unit (APU). (Emergency power is provided by a battery, a ram air turbine, etc.)

(b) Single engine aircraft with APU for emergency and ground power.

Figure 42 provides a simplified schematic of the mechanical self-start system for a single engine aircraft. In this configuration, a battery supplies power to a starter bus. A DC contactor switches this bus power to a DC motor contained within the Jet Fuel Starter (JFS). The motor rotates the JFS

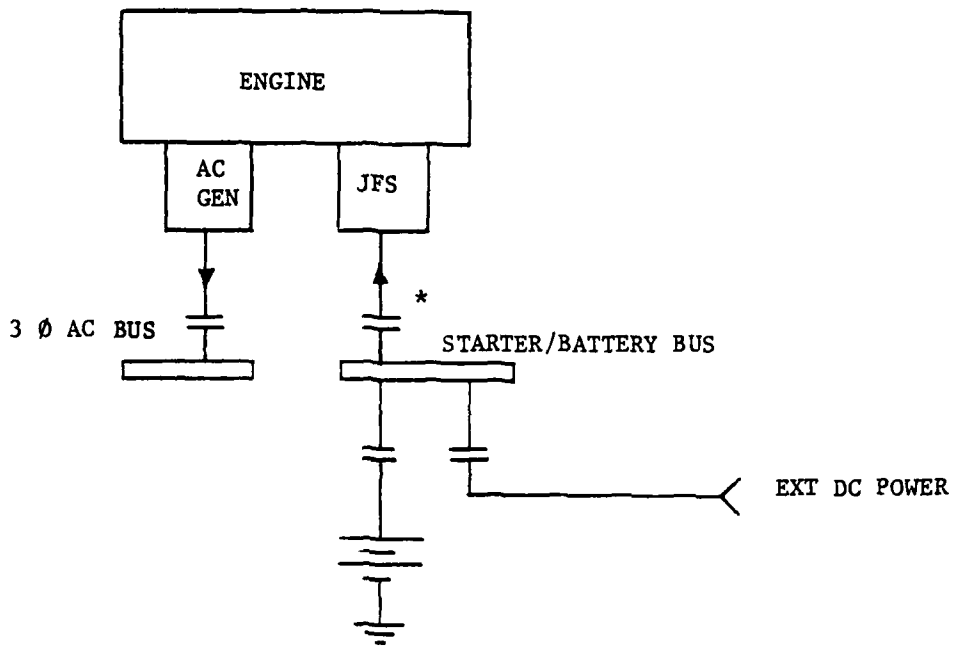

* CONTACTOR ADDED FOR SELF-START CAPABILITY

FIGURE 42 SELF-START FOR AIRCRAFT WITH NO APU DC INITIATED JFS (MECHANICAL)

turbine until JFS ignition occurs. The starter then spins up the engine rotor until a valid start is initiated. The major advantage of the JFS to the electrical system results from the relatively low level of electrical power required to start the engine. In addition, this power can be either AC or DC. The JFS weight and electrical requirements are based on a STU 26/A (military designation) starter. The first option column of Table 26 identifies the weight penalties imposed on a single engine aircraft for providing a "mechanical" (JFS) self-start system.

The electrical self-start system illustrated in Figure 43 is comparable to the JFS implemented self-starter. This alternate system utilizes a combination starter/generator to minimize the impact of adding an electric starter. In the past, this starter/generator combination dictated a DC machine. This occurred because a practical sized AC motor lacks sufficient stall torque (typically, several hundred foot-pounds) to start engine rotor rotation. Since approximately 85 percent of the power on conventional aircraft is distributed as AC power, a large static inverter is required if a DC generator/ starter is used.

With the development of brushless DC motor concepts, particularly as applied to VSCF systems, a combination of "DC motor" and "AC generator" functions can be provided by one machine. Thus, use of an electric starter no longer dictates a DC power generator.

The starter system illustrated in Figure 43 utilizes a VSCF starter/generator which creates AC power via an electronic converter in the generator mode. In the start mode, AC power is chopped and controlled to the various generator windings to effect the equivalent of a brushless DC motor. In the case of an IDG system, the machine is operated as an induction/synchronous motor. The

TABLE 26

ENGINE SELF START WEIGHT COMPARISON (NO APU)

(SINGLE 15,000 LB. THRUST ENGINE ~NO APU)

ITEM	OPTION (WT IN LBS)		
	SELF-START SYSTEM		NO SELF-START
	MECHANICAL (JFS)	ELECTRICAL	AIR TURBINE
GENERATOR △	0	13	0
BATTERY △	33	282	0
STARTER - JFS	92	0	0
AIR TURBINE STARTER (M19557/5)	0	0	23
INVERTER or DRIVE △	0	100	0
CONTACTOR △	2	4	0
TOTAL △	127	399	23 (REF ONLY)
SAVINGS	(68%) 272 LBS		

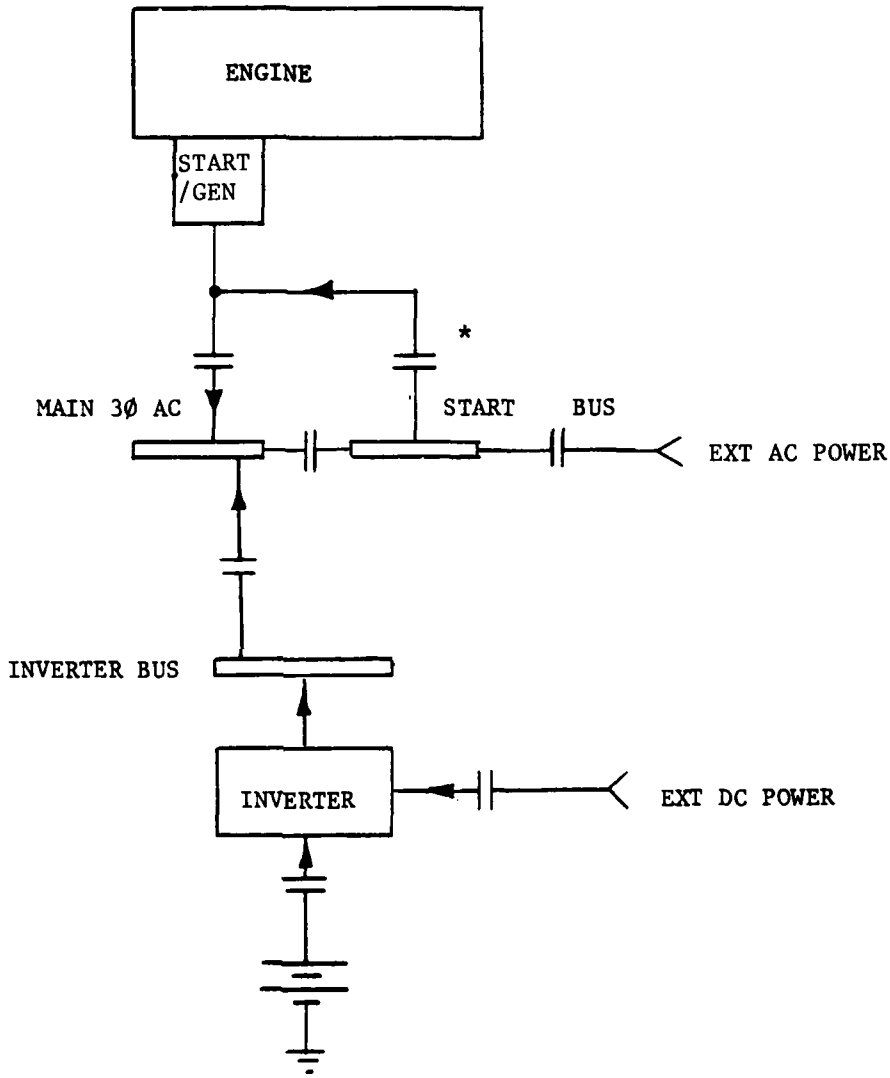

* CONTACTORS ADDED FOR
SELF-START CAPABILITY

FIGURE 43 SELF-START FOR AIRCRAFT WITH NO APU STARTER/GENERATOR (ELECTRICAL)

major disadvantage of both approaches results from requiring AC power of a significant quantity to start the engine. For a true self-start capability, this AC power must be derived from a battery or from an APU. Table 26 addresses the weight penalties resulting from a battery powered electric start system while Table 27 addresses APU sourced starting. The Table 26 data reflects the significant weight penalty imposed not only by the battery but also by the static inverter required to convert DC power to AC power. These two elements impose nearly thirty times the generator weight penalty on the electrical system for adding electric start. The significant contributors to electrical system weight penalty is therefore the supporting hardware and not the starter/generator hardware.

As shown in Table 26, installation of an electric starter on a non-APU equipped single engine aircraft results in a significant weight penalty over the "mechanical" self-start system. Finally, the data listed in the last option column provides a weight comparison baseline for a non-self-starting system derived for an air turbine starter and an external start cart (air compressor). The external start-cart weight is not listed in the table since the cart is not installed in the aircraft. The turbine starter weight is based on a MIL-T-19557/5 turbine.

Table 27 summarizes the major advantages and disadvantages of an electric starter when compared to a mechanical starter for a non-APU equipped single engine aircraft. As shown in Table 26 and 27, this type of an electric starter/generator system is not practical in a single engine aircraft application.

Since the major problem with the single engine electric start system discussed above resulted from starting power source penalties, a second single engine

TABLE 27

ADVANTAGES/DISADVANTAGES OF ELECTRIC SELF-START
VS
MECHANICAL (JFS) SELF-START
FOR
A NON-APU EQUIPPED SINGLE ENGINE AIRCRAFT

ADVANTAGE	DISADVANTAGE
1. Reduce space(frontal area) required at the engine accessory drive.	1. Larger capacity generator required to provide high motoring torque.
2. Reduces maintenance failure rates by eliminating separate starting hardware.	2. Requires installation and maintenance of large batteries and inverters.
3. Improves overall weapon system reliability by reducing parts count.	3. May distort aircraft power quality during start mode to a more severe level than the JFS system.
4. Provides faster starting since the two "gas turbines" of the JFS configuration are not being started sequentially (i.e., JFS turbine starts then engine starts.)	4. Redesign of external ac power cart likely required if external ac power starts are attempted.
5. No additional connections to the engine required other than for the generator.	5. Significantly increases the weight of the electrical system.
6. Not as susceptible to altitude limitations for inflight restart.	6. Cannot start engine in the event of a system failure. An alternate means to start the engine in addition to the start/gen may be desired.

arrangement was investigated. In this second arrangement an APU is installed in the aircraft for emergency and ground maintenance requirements. Figures 44 and 45 depict typical schematics for the mechanical and electrical self-start systems respectively in an APU equipped single engine aircraft. The only difference between these two systems and those defined in Figures 42 and 43 is the elimination of the battery and inverter power source by the APU. The JFS implemented system has a 33 percent lower weight penalty due to battery elimination. The electric start implemented system, however, has a significantly lower weight penalty due to elimination of a much larger battery plus a high surge current rated inverter. Off-setting part of the battery/ inverter weight savings is a weight increase in the APU due to requiring a higher rated APU than that assumed installed in the baseline (non-self-start) aircraft.

Table 28 identifies the weight penalties for the mechanical and electrical self-starting systems. In addition, the non-self-starting system weight is also shown for comparison. As indicated in the table, the electrical starting system imposes a slightly lower weight penalty than the mechanical system.

Overall advantage/disadvantage factors are summarized in Table 29 for the electrical and mechanical self-starters installed in APU equipped single engine aircraft.

In general, the electric starter on an APU equipped, single engine aircraft is marginally "better" than a JFS implemented system. The electric starter is evaluated as marginally better because another mechanical start option is available. However, it does not meet the established requirement of being independent of the engine. This option consists of an APU mounted directly on the engine accessory drive. The APU design is such that engine starting is

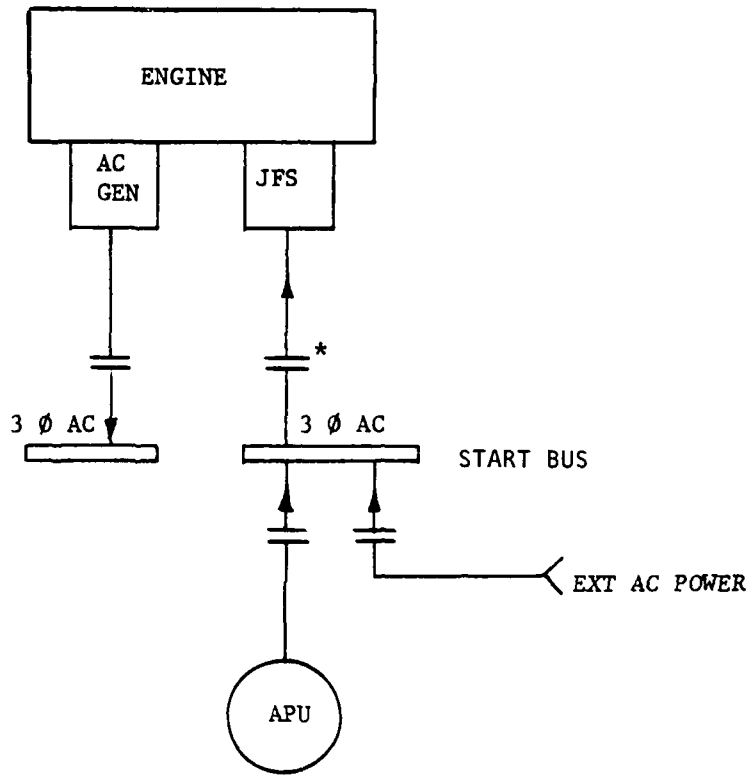

* CONTACTOR ADDED FOR SELF-START CAPABILITY

FIGURE 44 SELF-START FOR APU EQUIPPED AIRCRAFT AC INITIATED JFS (MECHANICAL)

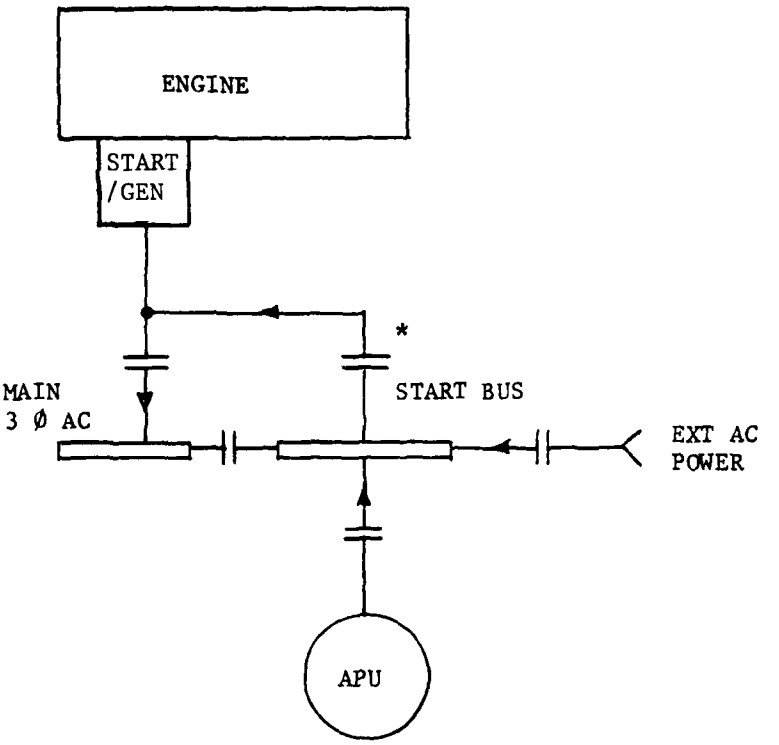

* CONTACTOR ADDED FOR
SELF-START CAPABILITY

FIGURE 45 SELF-START FOR APU EQUIPPED AIRCRAFT
STARTER/GENERATOR (ELECTRICAL)

TABLE 28

ENGINE SELF-START WEIGHT COMPARISON

(SINGLE 15,000 LB. THRUST ENGINE ~ WITH APU)

ITEM	OPTION (WT IN LBS)		
	SELF-START SYSTEM		NON SELF-START
	MECHANICAL (JFS)	ELECTRICAL	AIR TURBINE
GENERATOR △	0	13	0
STARTER (JFS)	92	0	0
AIR TURBINE STARTER	0	0	23
CONTACTOR △	1	1	0
APU △	0	48	0
TOTAL △	93	62	23 (REF ONLY)
SAVINGS		(33%) 31 LBS	

AD-A099 894 VOUGHT CORP DALLAS TX F/G 10/2
POWER SYSTEM CONTROL STUDY. PHASE I. INTEGRATED CONTROL TECHNIQ--ETC(U)
MAR 81 D E LAUTNER, A J MAREK, J R PERKINS F33615-78-C-2018
UNCLASSIFIED AFWAL-TR-80-2129 NL

3 OF 5
AD
A099894

TABLE 29

ADVANTAGES/DISADVANTAGES OF ELECTRICAL VERSUS MECHANICAL SELF-STARTING FOR AN APU EQUIPPED SINGLE ENGINE AIRCRAFT

ADVANTAGE	DISADVANTAGE
1. REDUCES SPACE (FRONTAL AREA) REQUIRED AT THE ENGINE ACCESSORY DRIVE.	1. LARGER GENERATOR CAPACITY REQUIRED TO PROVIDE FOR HIGH MOTORING TORQUES.
2. REDUCES MAINTENANCE FAILURE RATES BY ELIMINATING DEDICATED STARTING HARDWARE.	2. LARGER APU CAPACITY REQUIRED TO PROVIDE STARTING POWER
3. IMPROVES OVERALL WEAPON SYSTEM RELIABILITY BY REDUCING PARTS COUNT.	3. MAY DISTORT ELECTRICAL POWER QUALITY DURING START MODE TO A MORE SEVERE LEVEL THAN WITH A JFS STARTER.
4. PROVIDES FASTER STARTING THAN JFS.	4. REDESIGN OF EXTERNAL AC POWER CART REQUIRED.
5. PROVIDES LOWER WEIGHT PENALTY FOR SELF-STARTING	5. OPTION IS NOT AVAILABLE FOR AN EMERGENCY GROUND START WITH COMPRESSED AIR IN THE EVENT OF SYSTEM FAILURE. AN ALTERNATE MEANS FOR STARTING THE ENGINE MAY BE DESIRABLE IN SOME APPLICATIONS.
6. NO ADDITIONAL CONNECTIONS REQUIRED TO ENGINE AREA.	

provided directly by a mechanical link from the APU. This alternate was not analyzed in detail, but a weight estimate was made with the assuumption that the "initially installed" APU capacity is sufficient to start the engine. This option yields a projected weight penalty of 1 pound versus the 62 pound penalty of an electric starter. This lesser weight penalty not only assumes that the initial APU capacity is sufficient for engine starting, but that the mechanical link to the engine does not impose additional penalties. This second assumption is a function of installation restrictions. In addition, this option assumes that the reduced safe return probability resulting from higher system vulnerability and susceptibility due to single failures is acceptable. Higher vulnerability results from less physical isolation between primary and emergency power sources.

Four Engine Aircraft

Similar trades between mechanical and electrical self-starting systems can be conducted for four engine aircraft. The major impact in transiting from single to multiple (four) engine aircraft is in spreading the "cost" of the self-starting power source over more engines (or more power channels).

Figures 46 and 47 schematically illustrate mechanical (JFS) and electrical self-start systems, respectively, for a four engine aircraft which is not equipped with an APU. These two configurations are comparable to the single engine self-start systems of Figures 42 and 43.

Table 30 identifies the principle weight penalty contributors for both mechanical and electrical systems. As shown in the table, the battery and inverter penalty imposed on the electric start system again indicates a slight advantage in installing the mechanical system as was determined in the single

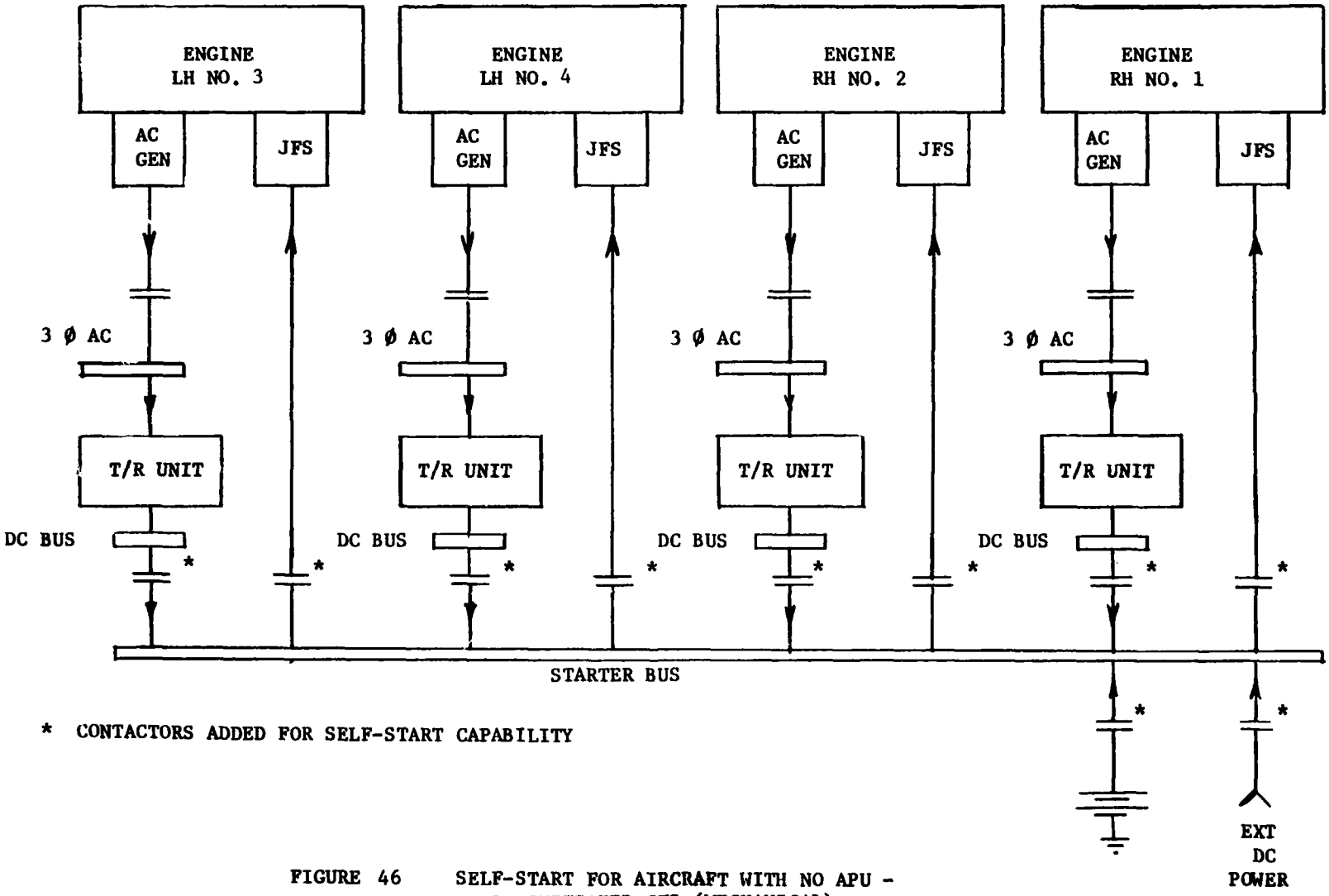

* CONTACTORS ADDED FOR SELF-START CAPABILITY

FIGURE 46 SELF-START FOR AIRCRAFT WITH NO APU - DC INITIATED JFS (MECHANICAL)

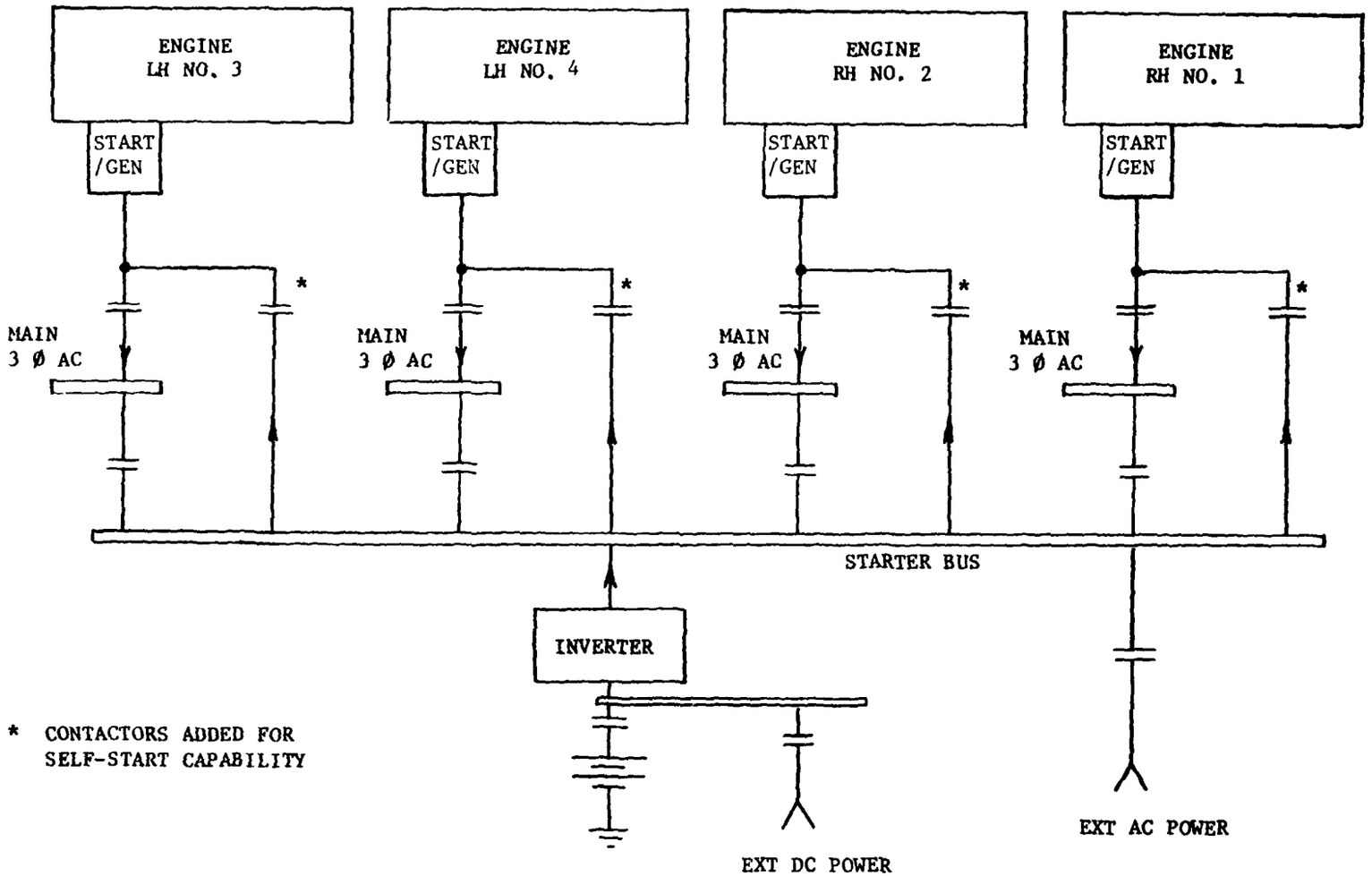

FIGURE 47 SELF-START FOR AIRCRAFT WITH NO APU - STARTER/GENERATOR (ELECTRICAL)

TABLE 30

WEIGHT COMPARISON

(FOUR 15,000 LB. THRUST ENGINES ~ NO APU)

ITEM	OPTIONS (WT IN LBS)		
	SELF-START SYSTEMS		NON SELF-START
	MECHANICAL (JFS)	ELECTRICAL	AIR TURBINE
GENERATOR △	0	52	0
BATTERY △	33	282	0
INVERTER △	0	100	0
STARTER - JFS	368	0	0
AIR TURBINE STARTER	0	0	92
CONTACTOR △	17	8.5	0
TOTAL	418	443	92 (REF ONLY)
SAVINGS	(6%) 25 LBS		

engine application. A summary of advantages and disadvantages for installing an electric starter as opposed to a "mechanical" starter in a four engine (non-APU) aircraft is presented in Table 31.

Figures 48 and 49 illustrate comparable mechanical and electrical self-start systems for APU equipped four engine aircraft. These two systems are equivalent to the single engine configurations of Figures 44 and 45.

As shown in Table 32, a significant weight advantage results from selecting the electric start system for the APU equipped four engine aircraft. When coupled with the advantages listed in Table 33, an electric starter appears as the desirable choice for multi-engine self-starting when an APU is installed. In fact, the weight saved by selecting the electric start system could, in some cases, cancel the entire weight of the installed APU.

In summary, a qualitative comparison of electrical versus mechanical self-starting systems for the four aircraft configurations is shown in Table 34. Although the advantage of electric starters is marginal on some single and multi-engine aircraft applications, an electric starting system should be included in the baseline design for study of its stability impact on the electric power system.

5.5 EMUX INTEGRATED GENERATOR CONTROL CONCEPTS

EMUX integrated generator control concepts were evaluated for the multi-engine aircraft. For this study, it is assumed the electrical system consists of three main generators, one APU driven emergency generator and two battery/inverter power sources. However, the concepts are applicable to any number of generator systems with minimal change.

TABLE 31

ADVANTAGES/DISADVANTAGES FOR ELECTRIC START OVER MECHANICAL START IN A NON-APU-EQUIPPED FOUR ENGINE AIRCRAFT

ADVANTAGES	DISADVANTAGES
1. Reduces space (frontal area) required at engine accessory drive.	1. Larger generator capacity required at each engine to provide the high motoring torques.
2. Reduces maintenance failure rate by eliminating dedicated starting hardware on each engine.	2. Installation and maintenance of large battery and inverter required.
3. Improves overall weapon system reliability due to reduced parts count.	3. Greater electrical power quality distortion during start mode.
4. Provides faster engine start.	4. May require external ac power cart redesign.
5. No additional electrical or fuel line connections required in vicinity of engines.	5. Requires installation of starter/generator on each engine. (Mission completion requirements may only require three generators)
6. Less susceptible to high altitude starting limitations.	6. Emergency ground start with compressed air is not practical if starter fails. An alternate means for starting the engine may be desirable for some applications.
7. Aids in justifying fourth generator for improved mission completion/safe return probabilities.	7. Slight weight penalty (10%).
8. Greater growth capability as result of larger capacity generating system.	

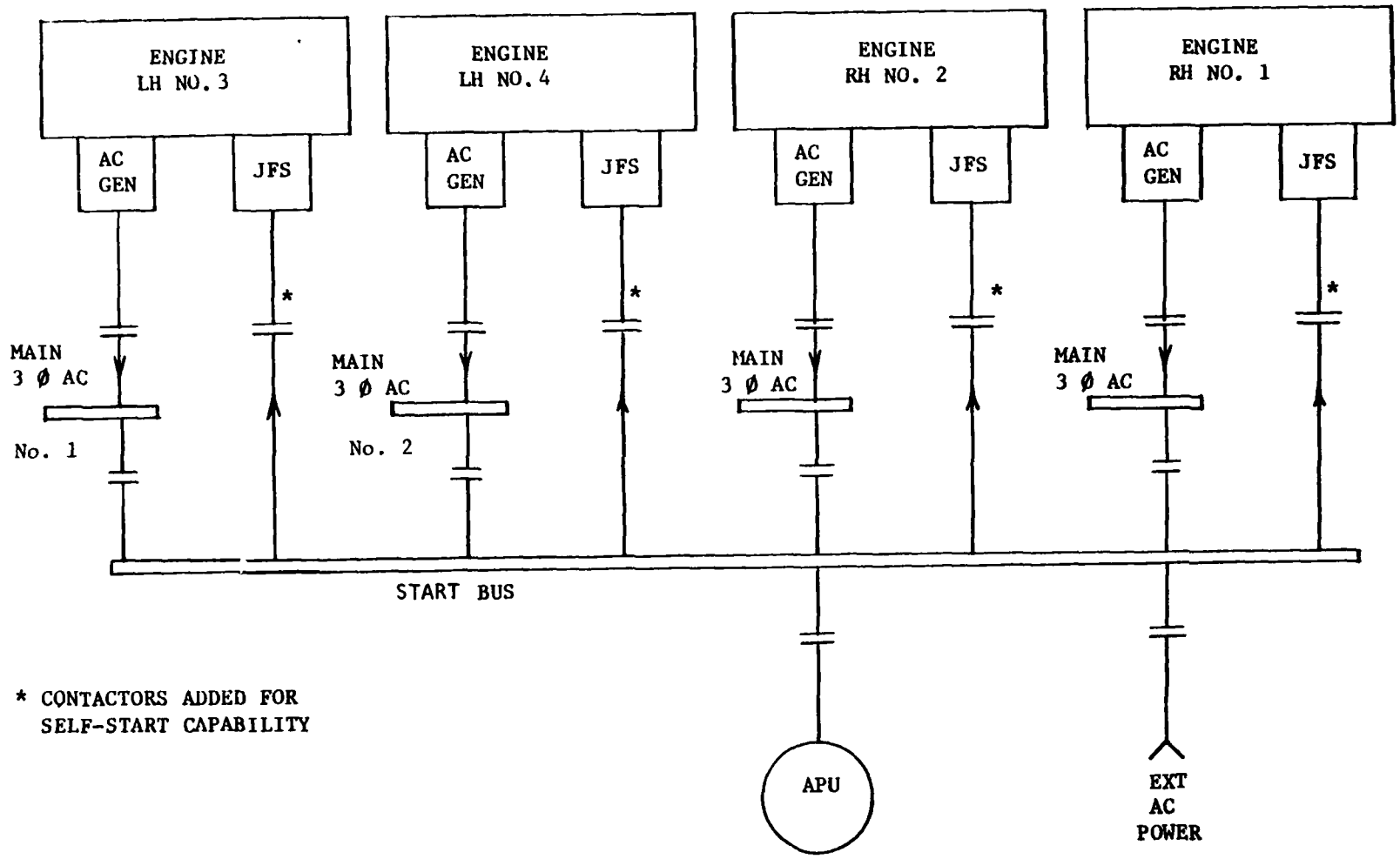

FIGURE 48 SELF-START FOR APU EQUIPPED AIRCRAFT - AC INITIATED JFS (MECHANICAL)

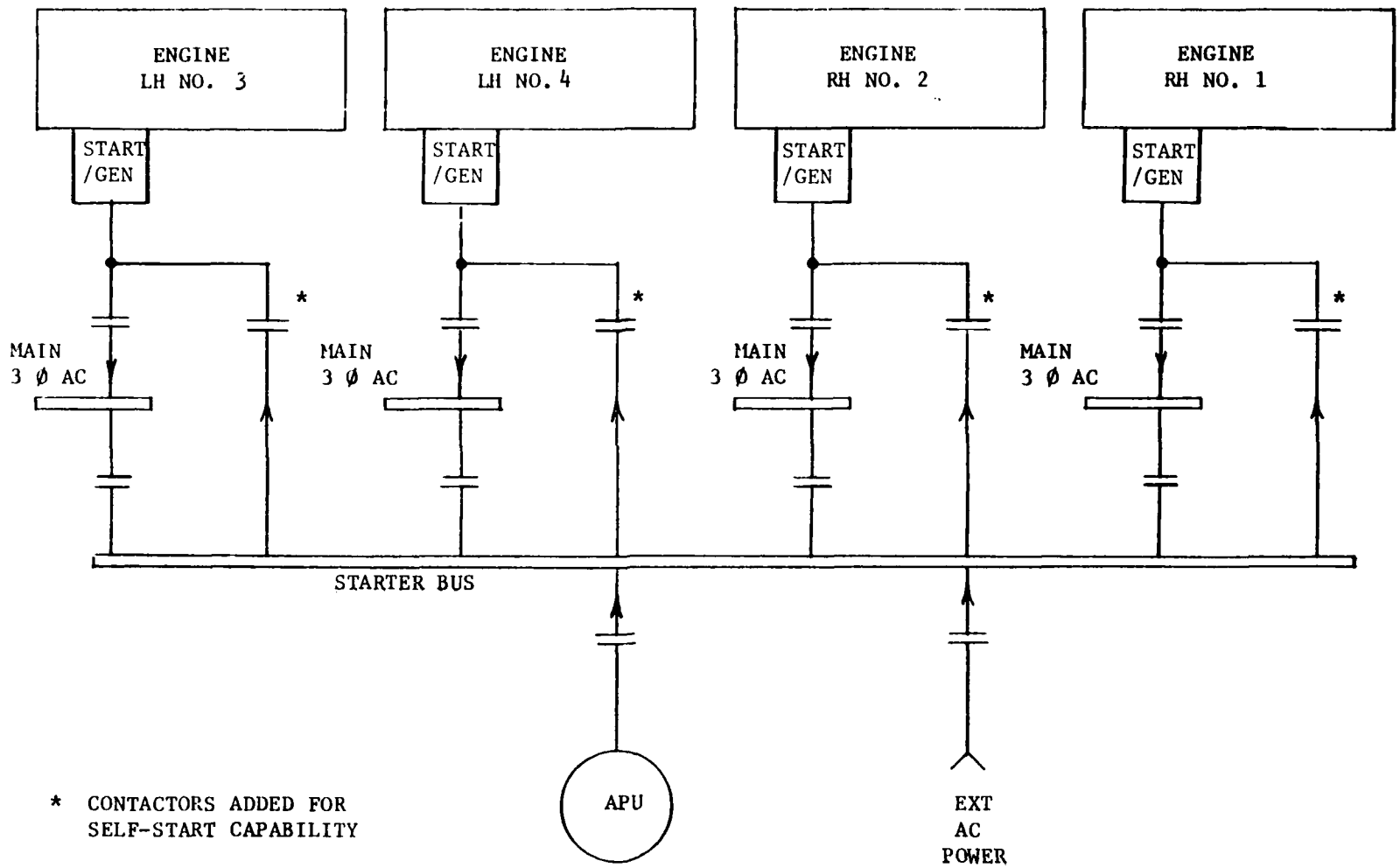

FIGURE 49 SELF-START FOR APU EQUIPPED AIRCRAFT
STARTER/GENERATOR (ELECTRICAL)

TABLE 32

WEIGHT COMPARISON

(FOUR 15,000 LB. THRUST ENGINES - WITH APU)

ITEM	OPTION (WT IN LBS)		
	SELF-START SYSTEMS		NON SELF-START
	MECHANICAL (JFS)	ELECTRICAL	AIR TURBINE
GENERATOR Δ	0	52	0
APU Δ	0	48	0
STARTER - JFS	368	0	0
AIR TURBINE STARTER	0	0	92
CONTACTOR Δ	3	3	
TOTAL	371	103	92 (REF ONLY)
SAVINGS		(72%) 268 LBS	

TABLE 33

ADVANTAGES/DISADVANTAGES OF ELECTRIC START VERSUS MECHANICAL START IN APU EQUIPPED FOUR ENGINE AIRCRAFT

ADVANTAGES	DISADVANTAGES
1. Reduces space (frontal area) required at engine accessory drive.	1. Larger generator capacity required at each engine to provide high motoring torques.
2. Reduces maintenance failure rates by eliminating dedicated starting hardware on each engine.	2. Larger APU capacity required to provide electric starting power.
3. Improves overall weapon system reliability due to reduced parts count.	3. Greater electrical power quality distortion during starting mode.
4. Provides faster engine start than JFS system.	4. Redesign of external ac power cart likely required.
5. No additional electrical or fuel line connections required at the engines.	5. Requires installation of starter/generator on each engine (Mission requirements may only require three generators)
6. Less susceptible to high altitude starting limitations.	6. Emergency ground start with compressed air is not practical if starter fails. Alternate means for starting the engine may be desired for some applications.
7. Aids in justifying fourth generator for improved mission completion/safe return probabilities.	
8. Significant weight savings.	
9. Greater growth capacity as result of larger capacity generating system.	

TABLE 34

SELF-START QUALITATIVE COMPARISON MATRIX

AIRCRAFT CONFIGURATION	MECHANICAL	ELECTRICAL
Single Engine No APU	Significant Advantages	Minimal Advantages
Single Engine With APU	Marginally Advantageous under certain conditions.	Marginally advantageous under certain conditions
Four Engine No APU	Marginally Advantageous under certain conditions	Marginally advantageous under certain conditions.
Four Engine With APU	Minimal Advantages	Significant Advantages

The four control concepts evaluated are summarized by the following characteristics:

(a) Conventional dedicated Generator Control Units (GCUs), Bus Control Units (BCUs), and EMUX power distribution.

(b) EMUX central processor control of GCU and BCU functions in addition to power distribution functions.

(c) GCU and BCU processing at remote EMUX "smart" terminals with supplementary processing at EMUX central processors.

(d) GCU and BCU processing provided by dedicated G/BCU smart terminals with MIL-STD-1553 interface to EMUX.

Figure 50 shows a simple control implementation (concept 1) using conventional generator control architectures. This configuration consists of dedicated GCUs, BCUs, and EMUX hardware. The system arrangement permits real time GCU control of the generator regulation and protective functions as well as real time interface between GCU channels for system paralleling (load division) and synchronizing functions. Also, the dedicated BCU hardware provides real time bus management and bus/feeder protection.

To provide supplementary control and monitoring in the form of automatic load management and BIT data transfer, the dedicated GCUs and BCUs interface with the EMUX central processors through remote EMUX universal terminals. This supplementary control only permits electrical system adjustments after the power generation and bus management systems have stabilized.

A summary of advantages and disadvantages of the concept are given in Table 35. The major disadvantage of the concept is the cascaded subsystem arrangement with no feedback. This cascade arrangement may result in stability limitations.

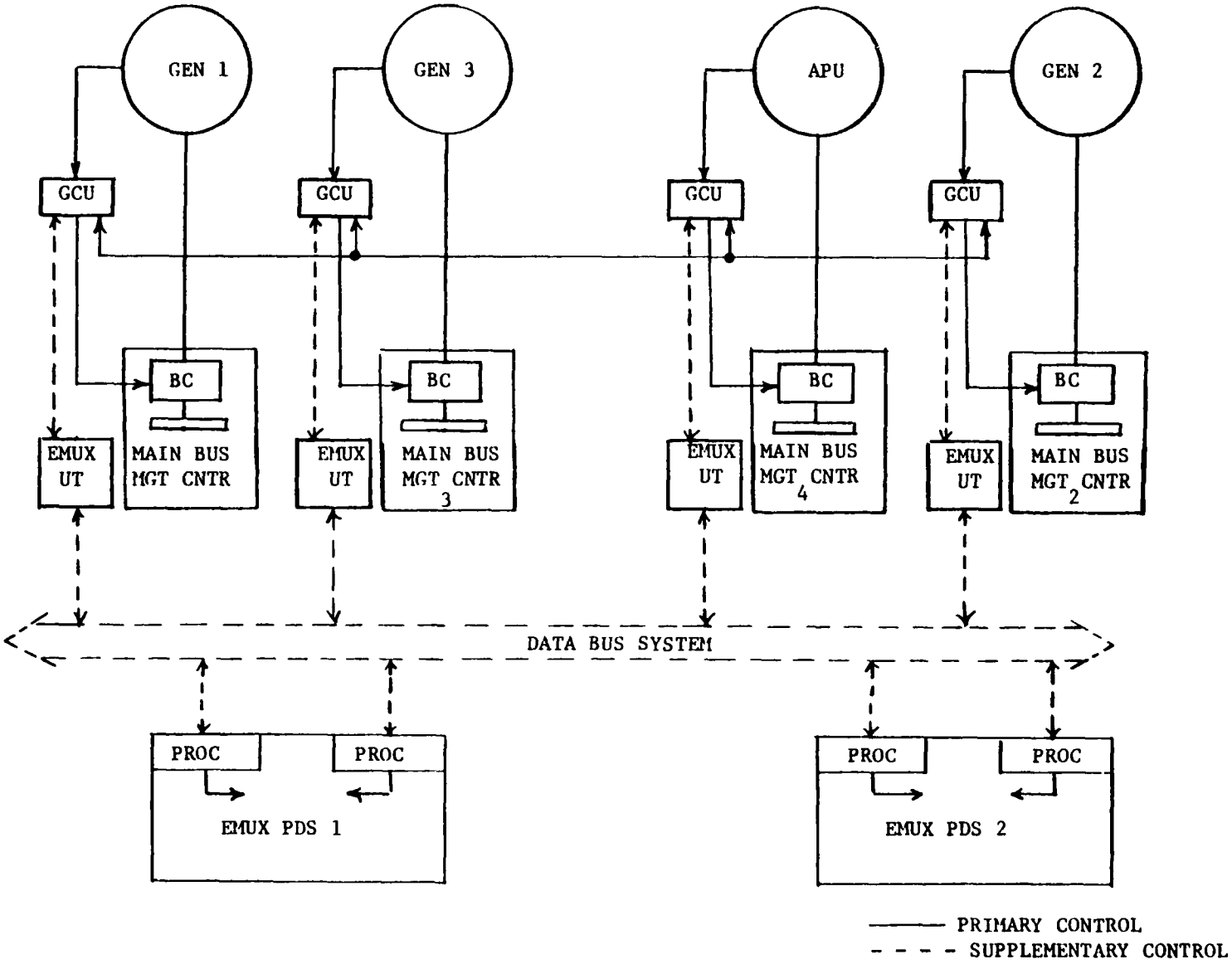

FIGURE 50 EMUX/GENERATOR CONTROL - CONCEPT 1

TABLE 35

EMUX/GENERATOR CONTROL - CONCEPT 1

ADVANTAGES	DISADVANTAGES
1. Dedicated hardware can be optimized for dedicated function.	1. Requires use of EMUX universal terminals to interface GCU and BCU functions with the EMUX processors.
2. Interfaces simplified by minimizing data transfer between subsystems.	2. Cascaded system is essentially open loop with minimal feedback thru EMUX data bus. This decreases overall system stabilities.
3. Minimum redesign of existing hardware required.	3. Response of data transfer loop thru the EMUX processor is too slow to adequately control any action except load management (EMUX thruput time is estimated at 50 milliseconds as opposed to ~50 microseconds generator data transfer requirements.).
4. Since operation is an isolated subsystem, susceptability to failures which completely shutdown the electrical system is very low.	4. Separate dedicated units may result in higher system weight, failure rate and maintenance actions.
5. Direct interface between GCU's permit rapid parallelling and synchronizing response.	
6. GCU and BCU functions can be implemented with μ processors or discrete/MSI/LSI circuitry.	
7. Critical loads can be powered (uncontrolled) even without EMUX operating by using "normally on" load controllers.	

An arrangement (concept 2) which attempts to correct the lack of electrical system feedback by placing all electrical system processing in redundant EMUX central processors is shown in Figure 51. This concept requires sufficient data transfer from the generators through the remote EMUX terminals to permit EMUX processing of generator control and regulation functions. The same EMUX terminal which interfaces with a generator can also interface with the bus management hardware associated with that generator. The critical influence of EMUX operation on the total electrical system is illustrated in Figure 51.

The EMUX terminal located at each main bus management center interfaces with the associated generator to monitor all generator parameters necessary for regulation. Additionally, the terminals generate the proper control signals to implement generator protection. Since all single processing is provided by the central EMUX processors, the EMUX system throughput time limits the response of the generator regulation/protection operation. Projected EMUX throughput time of 20 to 50 milliseconds is several orders of magnitude too slow for proper generator control necessary for high quality power and paralleling capability. This slow response of EMUX is the major disadvantage of using EMUX in a real time generator control loop. A summary of advantages and disadvantages of this concept is presented in Table 36.

An arrangement (concept 3) which alleviates the response time problem is shown in Figure 52. This concept basically is the same as that shown in Figure 51 except that generator/bus control signal processing is performed by remote EMUX "smart" terminals rather than by the central processors. By performing generator control signal processing at local terminals, the data transfer requirements over EMUX buses are minimized. This, in turn, speeds up the system data throughput time. However, the EMUX discrete I/O interface must still be adapted to the generator analog signals. The higher information

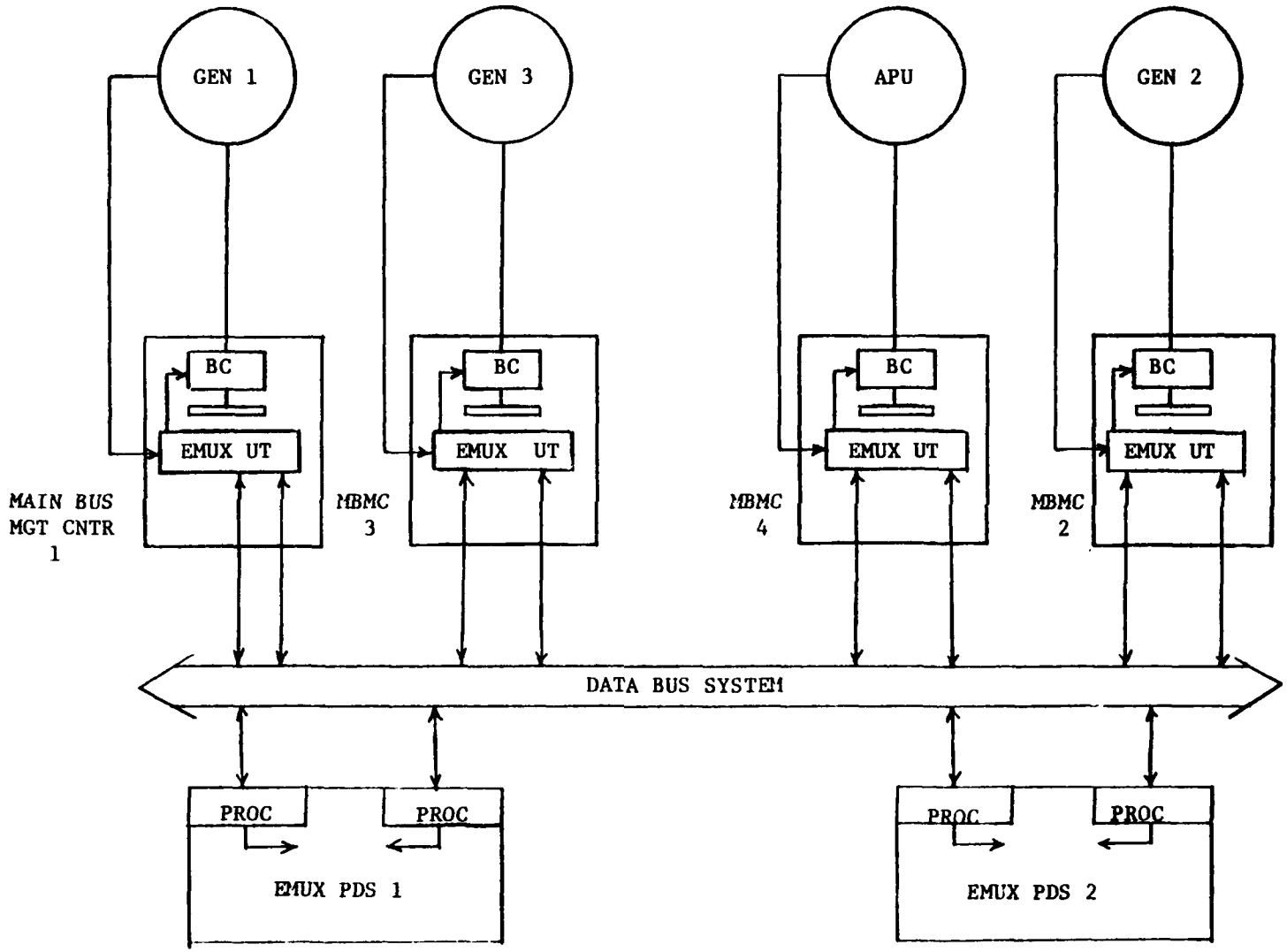

FIGURE 51 EMUX/GENERATOR CONTROL - CONCEPT 2

TABLE 36

EMUX/GENERATOR CONTROL - CONCEPT 2

ADVANTAGES	DISADVANTAGES
1. Complete use of standard hardware for data transfer and I/O interfaces.	1. A/D conversion required at generator and current sensor for data transfer to EMUX. It is not likely that these interfaces would convert to digital if dedicated GCU's were used. Excessive channel requirements may result from A/D conversion.
2. All power control processing would be accomplished at central locations, this would increase overall flexibility and subsystem coordination.	2. Thruput time for EMUX (as presently defined) is insufficient to control/ regulate generators in "real time".
	3. Generator PMG's or alternate continuous power sources are required to power up EMUX prior to regulation and control of the generators. It is estimated that approximately 500 watts (of PMG power) will be required to power-up sufficient EMUX hardware to operate generators.
	4. Not possible to power any loads if EMUX is not operational.
	5. Requires addition of EMUX universal terminals in each main bus center for generator interface.

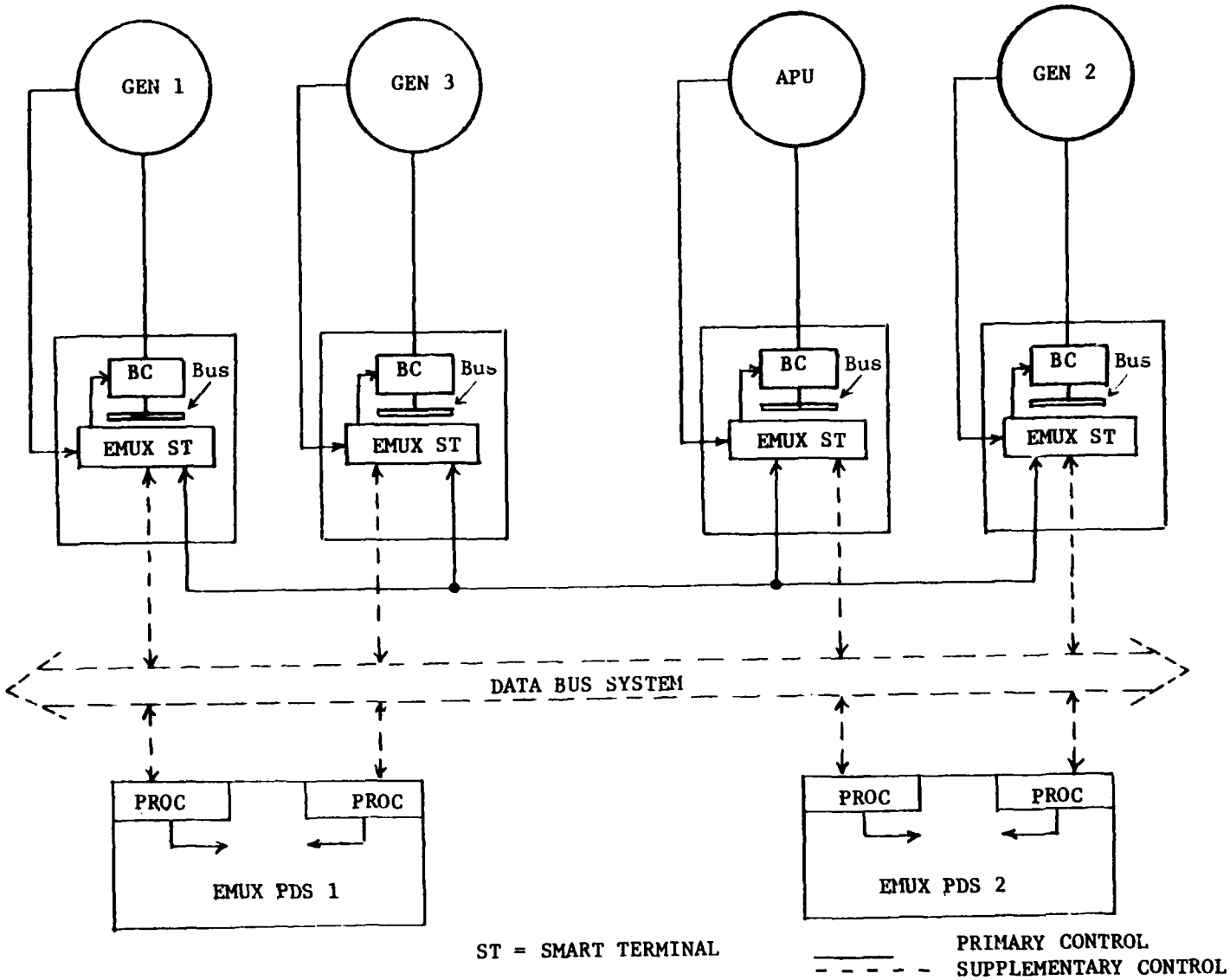

FIGURE 52 EMUX/GENERATOR CONTROL - CONCEPT 3

content of the generator interface I/O data still cannot be effectively handled by a discrete input formatted EMUX remote terminal.

This concept yields a lower vulnerability over the concept shown in Figure 51 since only the remote terminal associated with each generator must be powered by the respective generator PMG. Note that the concept shown in Figure 51 requires the PMG to supply power to the EMUX processors in addition to the remote terminals. The major advantages and disadvantages of the concept shown in Figure 52 are given in Table 37. The major problems to be confronted by this third concept is the attempt to implement generator control through a "standard" EMUX I/O interface and to provide the interface between generators over the "slow" throughput EMUX system. To overcome these problems requires the use of "non-standard" smart data terminals at the main bus centers as shown in Figure 53. The predominant characteristics of this concept is the use of modular smart data terminals to implement the generator and bus control functions. An overview of a possible modular terminal is shown in Figure 53. The blocks shown in dashed lines are part of a "standard" generator/bus control smart terminal. These basic blocks provide the following:

(a) A regulated power supply which converts the relatively poor PMG power to an acceptable power quality for the smart terminal electronics.

(b) A microprocessor and associated memory chips for generator control and regulation, and for bus management.

(c) A "standard" dual EMUX data bus port through which load management, BIT, and miscellaneous control data can pass.

(d) A dual generator/bus control port (either microprocessor configured parallel bus, fiber optic bus or MIL-STD-1553 bus) through which load division, synchronization and power bus status data is exchanged between generator channels.

TABLE 37

EMUX/GENERATOR CONTROL - CONCEPT 3

ADVANTAGES	DISADVANTAGES
1. Localized processing at main bus center EMUX "smart" terminals will minimize data transfer requirements on EMUX bus and speed up generator regulator/control response.	1. A/D conversion required at generator and current sensor interfaces for EMUX terminal I/O compatibility.
2. Complete use of standard hardware for electrical system data transfer and I/O interfaces.	2. Generator regulation and control response will not be "real time", but limited by total smart terminal processing tasks.
3. Each generator PMG would only need to power one EMUX "smart" terminal with an estimated 30 watts power required. The complete EMUX system would not be necessary to control the generators.	3. The large quantity of digital data transferred into the EMUX smart terminal thru the I/O interface could exceed the I/O capability of one terminal, i.e., additional terminals are required.
4. System flexibility and subsystem coordination will be improved since the EMUX processors would have access to all pertinent generator and bus data.	4. Direct data transfer between remote EMUX terminals would be required to fully implement this concept. This data terminal communication concept would require modifying the EMUX architecture.
5. Critical loads can be powered (uncontrolled) without EMUX operating.	5. Software coordination for smart terminals will be required between generator supplier, EMUX supplier and airframe (system) contractor.

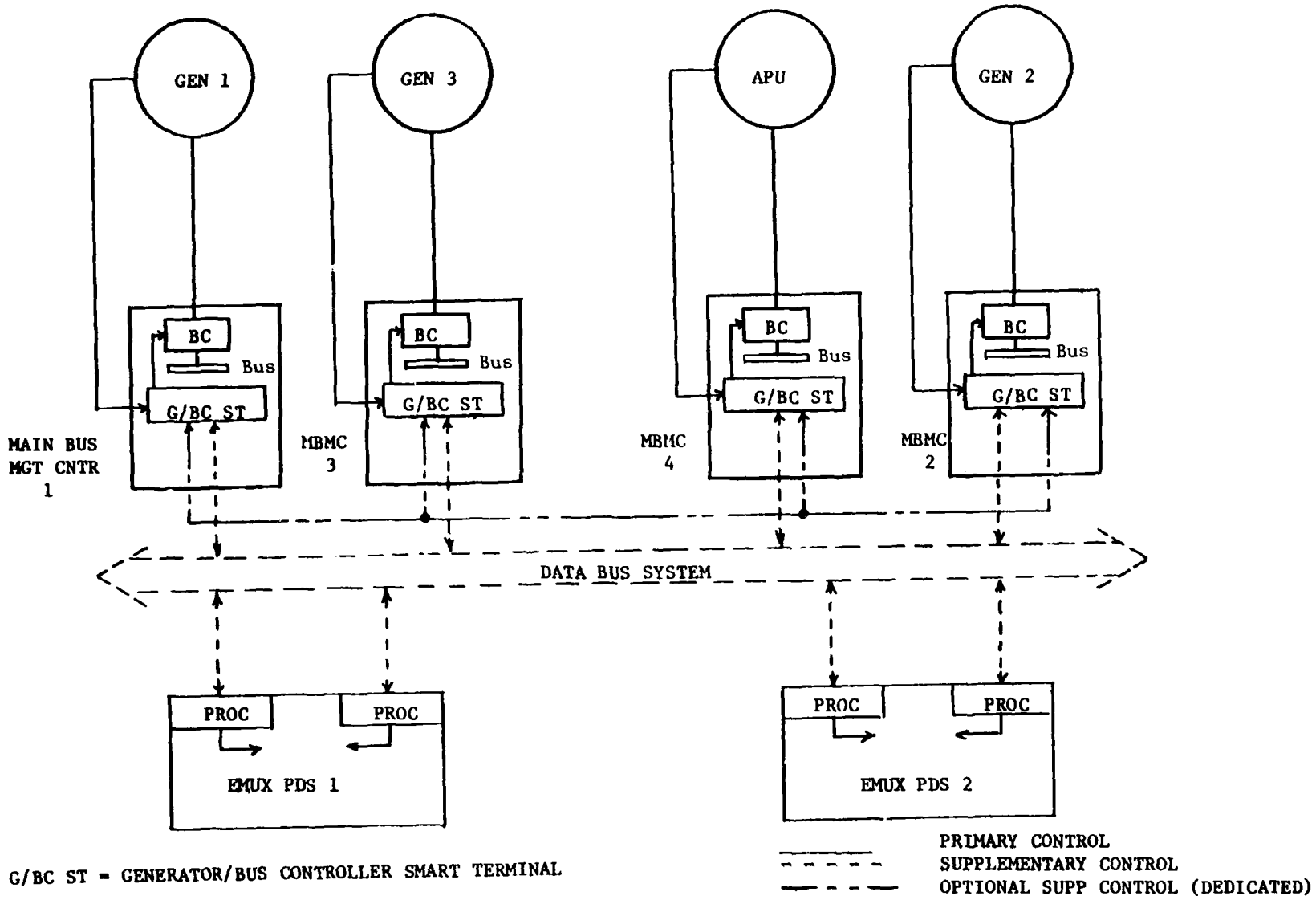

G/BC ST = GENERATOR/BUS CONTROLLER SMART TERMINAL

FIGURE 53 EMUX/GENERATOR CONTROL - CONCEPT 4

To provide the necessary level of customization required between aircraft due to differences in generator types, and bus controller and current sensor quantities, modules are plugged into the generator/bus controller smart terminal.

The customized generator interface module can best be provided by the generator manufacturer along with a software package for terminal software integration of the peculiar generator control/regulation functions.

The custom designed current sensor modules can be provided by various manufacturers. These include manufacturers of generators, generator/bus control terminals, current sensors and aircraft. These modules could possibly be "standard" modules since current sensor operation is easily defined.

The EMUX I/O interface can best be provided by the EMUX manufacturer. Similarily, the basic generator/bus control terminal can be developed by either the EMUX or the generator supplier.

Table 38 summarizes the advantages and disadvantages of this last control concept. The major disadvantages are the need for an additional EMUX terminal development and the continued requirement for A/D and D/A conversion of generator interface signals. Although a new terminal configuration is required, most of the terminal functions can be implemented with MSI/LSI circuits already developed for standard EMUX and AMUX terminals. Also, the requirement for A/D and D/A conversion circuitry to implement the generator interface may not be new. It is not unreasonable to expect that 1990 time period generators will be controlled by microprocessor implemented GCUs. If this becomes a reality, similar A/D and D/A conversion circuitry can be used to implement the customized generator interface module.

TABLE 38

EMUX/GENERATOR CONTROL - CONCEPT 4

ADVANTAGES	DISADVANTAGES
1. Dedicated processing required for generator regulation and control will minimize response slowdown due to EMUX related functions.	1. New development required for generator/bus control smart terminal.
2. Standard G/BC smart terminal can be used with specialized plug-in modules provided by generator supplier for A/D conversion of generator functions.	2. Smart terminal software coordination required between generator supplier and airframe (systems) contractor.
3. Not limited to standard EMUX terminal I/O configuration i.e., analog or serial digital data can be accommodated.	3. A/D conversion required for generator and current sensor data if not already digital.
4. Interface with EMUX bus provides access to BIT data and load management information.	4. Increase in total data bus quantities required to achieve desired response.
5. Dedicated data bus between G/BC smart terminals yields fast channel-channel coordination while not requiring modification of EMUX architecture/operation.	
6. PMG power required from each generator is limited to approximately 30 watts, which is within the present PMG capacity.	
7. Critical loads can be powered (uncontrolled) even without EMUX operation.	

Table 39 tabulates the estimated G/BCU terminal weight and volume by functional blocks shown in Figure 54. The weights and volumes for the listed circuit cards are derived from vendor catalogs and vendor submitted data. The power supply parameters are derived from weight/volume rules-of-thumb for DC-DC converters. Finally, the weight and volume for housing, cooling, external connectors, etc., was derived by determining package size required to enclose the listed electronic components.

The estimated terminal weight of 12.6 pounds is reasonable when compared to dedicated conventional GCU typical weights of 3 to 12 pounds. (The higher GCU weight apply to units with BIT capability.) The G/BCU terminal not only provides GCU functions but also controls bus contactors and feeder protectors/controllers as well as providing a communication link to the EMUX system.

For generator designs which incorporate the GCU function within the main generator housing (e.g., the F-18 VSCF generator), the G/BCU concept can still be maintained. For this case, the generator enclosed GCU can include data bus ports and a small EMUX I/O (discrete) interface module. The remaining modules shown in Figure 54 can be contained in the generator GCU.

Due to the complex interface between generator (and converter) and the associated control/protection circuits, there are advantages to installing the GCU within the generator/converter package. The major advantage lies in reduction of external interface harnessing and associated EMI/RFI problems.

The four control concepts are qualitatively compared in Table 40 to identify those concepts for which additional study is warranted. As indicated in the table, only the first and fourth concepts are particularly feasible. The only significant differences between these two concepts are:

TABLE 39

WEIGHT/VOLUME ESTIMATE
FOR G/BCU TERMINAL

ITEM	VOLUME (IN^3)	WEIGHT (LBS)
BASIC TERMINAL		
o EMUX DATA BUS PORTS	20	0.5
o MICROPROCESSOR AND MEMORY	34	0.85
o G/BCU DATA BUS PORTS	16.5	0.30
o POWER SUPPLY (DC-DC) ~66 WATTS	33	1.0
EMUX I/O INTERFACE MODULE	20	0.5
CURRENT SENSOR MODULE	12	0.3
GENERATOR INTERFACE MODULE	108	2.7
SUB-TOTAL	243.5	6.15
MISCELLANEOUS HOUSING, COOLING, EXTERNAL CONNECTORS, ETC.	130	6.5
TOTAL (EST)	374	12.65

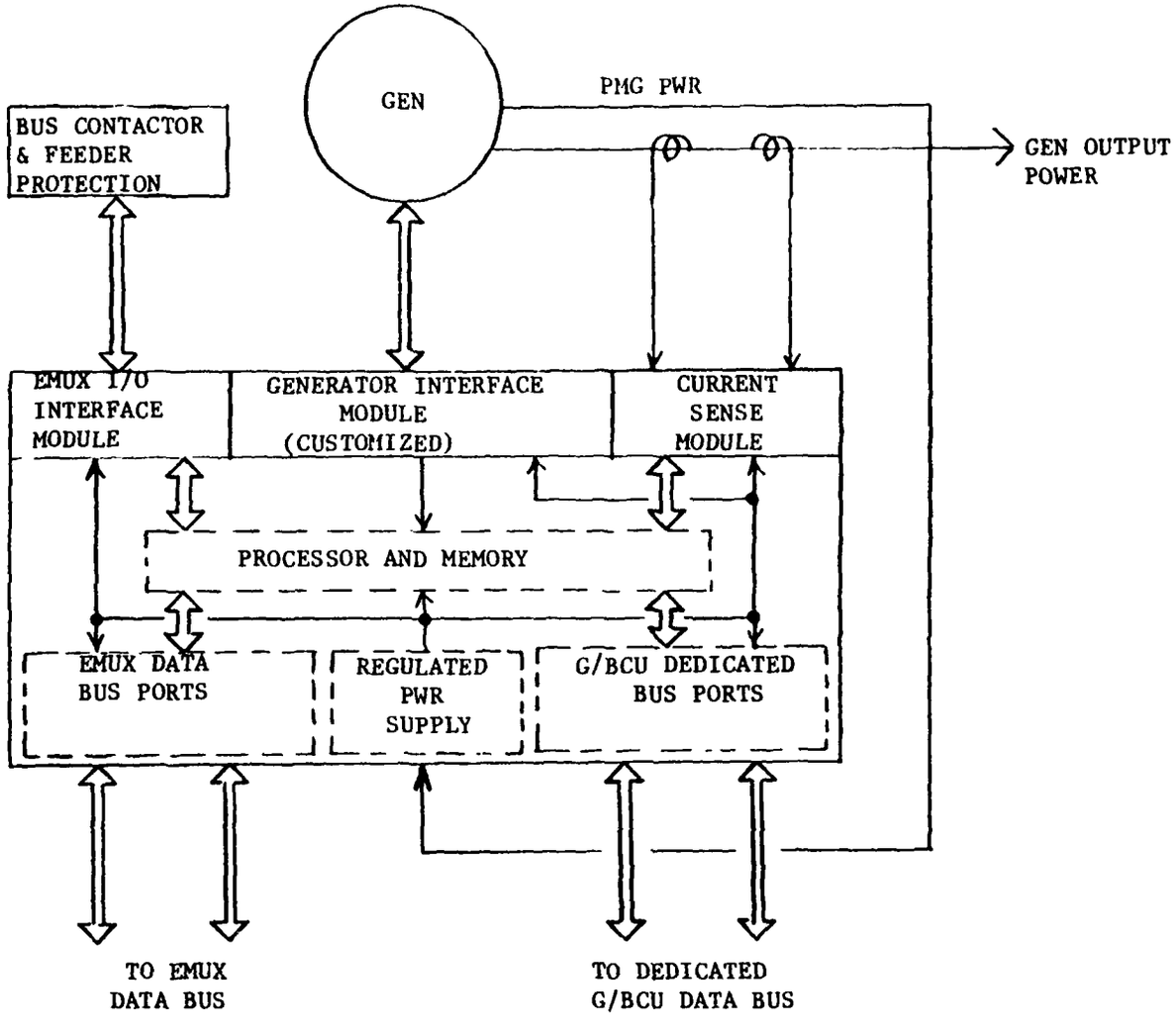

FIGURE 54 MODULAR GENERATOR/BUS CONTROL TERMINAL

TABLE 40

COMPARISON OF GENERATOR CONTROL CONCEPTS

PARAMETER	CONCEPT			
	(1) CONVENTIONAL	(2) STANDARD EMUX	(3) EMUX SMART TERM	(4) GCU SMART TERMINAL
Feasibility	High - System Presently Exists	Low - Not likely to be Implemented	Low - Standard Hardware not Compatible	High - Within State-of-the-Art
System Response	Sufficient	Too slow	Likely too low	Marginal
Interface Compatibility	High (Exists)	-	Low - A/D Conversion Required	Medium - A/D Conversion Desirable
Flexibility to Performance Adaptation	Low Unless Microprocessor Implemented	-	High - Programmable Performance	High - Programmable Performance
Weight	Low	-	Moderate	Low to Moderate
Built-in-Test	Difficult	-	Moderate	Low to Moderate
Reliability	High	-	Moderate	Moderate
Vulnerability	High	-	Moderate	Moderate
Technical Risk	Low	-	High	Moderate

(a) Concept 1 may be implemented without a microprocessor while concept 4 will definitely need a microprocessor.

(b) Concept 4 includes provisions at the generator control unit for direct EMUX bus interface. Concept 1 requires data transfer through an EMUX remote terminal.

If the future equivalent to a conventional GCU is implemented with a microprocessor for flexibility, BIT processing or whatever reason, then the approach defined for concept 4 should be pursued to standardize the interface with other aircraft systems.

Pursuant with this rationale, concepts 1 and 4 are recommended for the preliminary electrical system design. In addition, it is assumed that the G/BCU smart terminal can be contained within the generator housing with bus/feeder protector and load shedding software provided by the aircraft system integrator.

5.6 AC BUS CONTROLLER STUDY

The AC bus controller function can be implemented with an electro-mechanical device, a solid state device or a hybrid (electromechanical and solid state) device. The advantage and disadvantage of each implementation is given in Table 41.

The main advantages of an all solid state bus controller are the relatively fast response during turn-on and turn-off, and the ability of the device to be turned on and off at the zero axis of the sinewave. Both of these advantages contribute to improve power quality. The fast turn-on and turn-off response allows a power bus to be transferred from one power source to another in

TABLE 41

AC BUS CONTROLLER CHARACTERISTICS

CONCEPT	ADVANTAGES	DISADVANTAGES
Electromechanical	1. Low voltage drop (low dissipation) 2. Small size and low weight 3. Low cost 4. Off-the-shelf availability 5. Excellent electric isolation	1. Moderate operating life 2. High EMI, contact bounce and chatter 3. High control power (15 watts typical) 4. Slow response - Turn-on = 20 ms, Turn-off = 10 ms } typical
Solid State	1. Fast response - Turn-on = 1.0 ms, Turn-off = 2.5 ms 2. Low EMI - Turn-on and turn-off at zero crossover of sinewave 3. Long operating life over 1,000,000 cycles 4. High reliability - no moving parts 5. Low control power - typically 1.0 W 6. Excellent shock and vibration characteristics (no contact chatter)	1. High voltage drop - typically 1.5 volts (high pwr. dissipation) 2. Cooling required 3. A failure mode can result in half wave operation, i.e., DC power to load bus 4. Costly due to large SCR's required to accommodate fault current 5. Poor electric isolation typically 5.0 MA leakage 6. Large and heavy (including sink provisions)

TABLE 41 (Continued)

AC BUS CONTROLLER CHARACTERISITCS

CONCEPT	ADVANTAGES	DISADVANTAGES
Hybrid	1. Low voltage drop (low power dissipation) 2. Fast turn-on response, typically 1.0 ms 3. Low EMI - Turn-on and turn-off at zero crossover of sinewave 4. Long operating life typically 1,000,000 cycles 5. Small and low weight 6. No contact bounce or chatter	1. High cost due to redundant switches 2. A failure mode can result in half wave operation (DC power to bus) 3. Poor electric isolation (typical 5.0 MA leakage) 4. Reduced reliability due to added parts 5. High control power - typically 15 watts 6. Slow turn-off response - typically 20 milliseconds

typically 5 milliseconds (one cycle for turn-on and one cycle for turn-off). Electromechanical bus controllers require typically 30 milliseconds for bus transfer (10 milliseconds for turn-on and 20 milliseconds for turn-off). The hybrid device requires typically 22 milliseconds (one cycle turn-on and 20 milliseconds turn-off).

Both the solid state and hybrid concepts have the ability to switching at the zero axis of the sinewave. This capability reduces the switching EMI to a minimum. Furthermore, no contact bounce is experienced which further reduces EMI over the electromechanical device.

Voltage surges resulting from normal load switching are caused by the inherent regulation of the power source. Bus controller switching characteristics has little, if any, impact on the voltage surge characteristics, consequently, all three bus controller implementation concepts are acceptable.

Fault clearing is accomplished best by an all solid state device because the turn-off response is fast. Fault currents below a specified value can be interrupted within one cycle (2.5 ms). This is not possible with either the electromechanical or hybrid concepts.

The over-riding disadvantages of solid state bus controllers is the high power dissipation resulting from the semiconductor voltage drop. This dissipation coupled with the relatively low temperature rating of semiconductor devices (125°C for SCRs) makes cooling an important factor since the inherent reliability of semiconductor devices depends a great deal on using the device within its stated thermal limits. The most reliable cooling means is simply a heat sink or heat dissipator with natural air cooling. However, this mode of cooling is feasible, from a size and weight standpoint, only if the dissipation

is low. Table 42 gives the current values per phase of various generating system ratings. Also given are power dissipations resulting from a typical semiconductor voltage drop of 1.5 volts. The thermal resistance values shown in the table are the heat sink maximum values required to maintain the semiconductor temperature below its rating when operating in an ambient air of 71°C with natural air cooling. Figure 55 is a guide to the volume (surface area) of heat sink that is required to meet a given thermal resistance value and is based on an efficient heat sink design. An efficient design for natural air cooling or forced air cooling consists of a sink with extruded fins. Figure 55 clearly illustrates that below 0.3°C/W, very large increases of volume are necessary for small increments in thermal performance. The implication is that some means other than natural air cooling is required to reduce the volume. Other means include forced air cooling and liquid cooling. Forced air cooling is typically three times more efficient than natural air cooling. Liquid cooling provides the most compact design possible and the efficiency is highly dependent on the type of liquid used for cooling. The bus controller reliability with forced air and liquid cooling is lower than natural air cooling since the reliability of the cooling hardware (fans, pump, etc.) must be included.

Hybrid AC bus controllers may provide longer operating life over than of an electromechanical contactor since the switching is done primarily by the solid state device. Also, fast turn-on time is provided but turn-off time is longer since the time required to open the contactor is added to the time required to open the solid state switch. The primary disadvantages of the hybrid device is the higher cost and the reduced reliability due to the added components. The longer operating life is not a significant advantage in the bus controller application since 100,000 cycles (typical rating of an electromechanical contactor) represent approximately 60 years of aircraft life.

TABLE 42

AC BUS CONTROLLER COOLING CONSIDERATIONS

GENERATOR SYSTEM RATING KVA	CONTROLLER CURRENT PER PHASE AMPS	CONTROLLER POWER DISSIPATION (WATTS)			HEAT SINK THERMAL RESISTANCE °C/W (ΘH)
		PER SCR	PER PHASE	TOTAL	
40	116	87	174	522	0.055
60	174	131	261	783	0.037
90	261	196	391	1173	0.025
150	435	326	652	1956	0.015

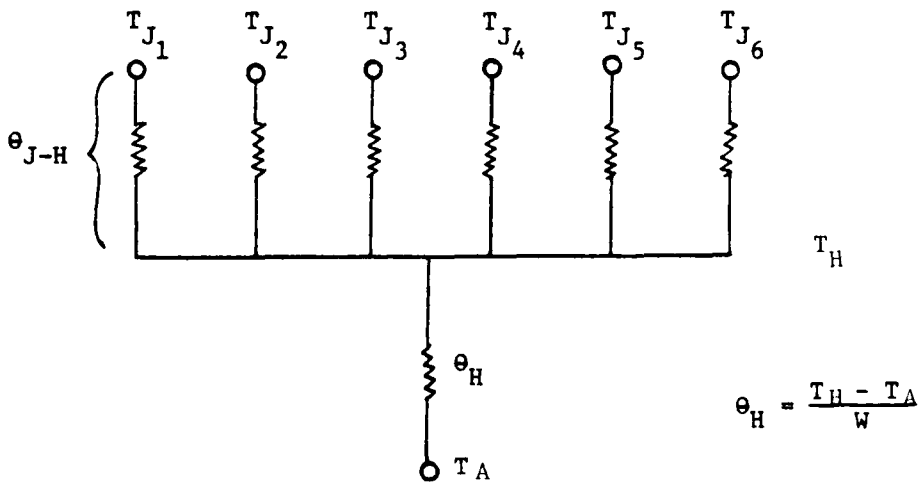

THERMAL RESISTANCE CIRCUIT

Θ_H = Thermal resistance of heat sink

T_H = Temperature of heat sink (100°C)

T_A = Temperature of ambient air (71°C)

W = Controller dissipation (total)

T_J = Temperature of semiconductor (125°C)

Θ_{J-H} = Termal resistance from junction to heat sink

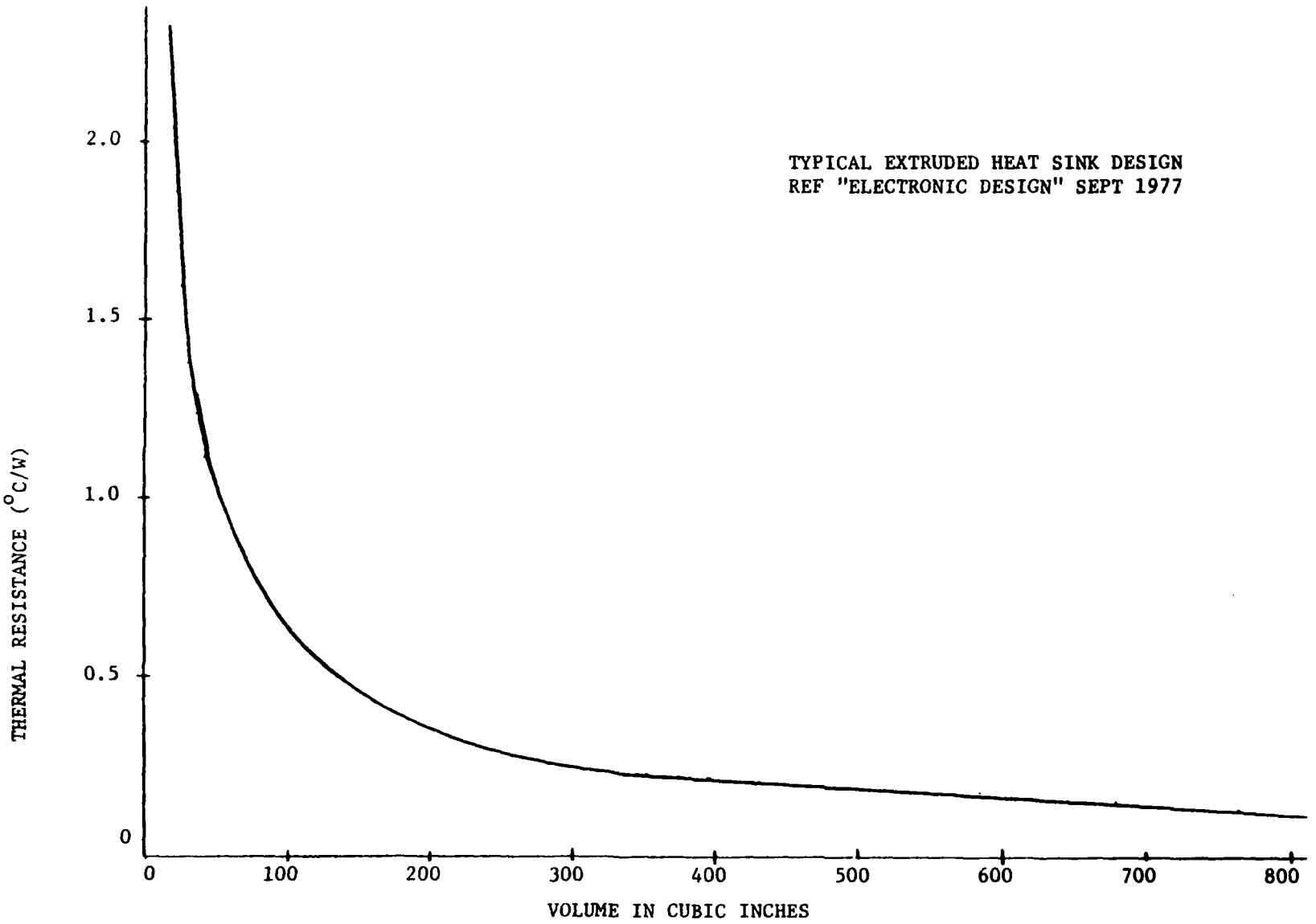

FIGURE 55 THERMAL RESISTANCE VS HEAT SINK VOLUME
FOR NATURAL AIR COOLING

Because of the above concerns, the electromechanical contactor is considered to be the best for the AC bus controller (LINE AND BUS TIE) application.

5.7 GAPLESS POWER BUS STUDY

Power interruptions presently defined by MIL-STD-704 are 50 milliseconds during normal electric system operation and 7.0 seconds during abnormal operating conditions. Normal operation includes switching of loads, changes in engine speeds and switching between operating power sources (synchronized and unsynchronized). Abnormal operating conditions include generator malfunction, fault clearing/isolation and transferring a bus to an alternate operating power source. Power interruptions exceeding 7.0 seconds can occur if the alternate power source is not operating. For example, start-up of an APU can be under the control of the flight crew in which case several seconds may elapse before power is available. These power interruptions become critical to the operation of some equipment such as that used in fly-by-wire systems.

It is not possible to provide an AC bus with no interruptions covering all operating and fault contingencies. However, it is possible to reduce the interruptions below the values allowed by MIL-STD-704.

The 50 millisecond power interruption time defined for normal electric system operation can be reduced to zero (uninterrupted power) in systems having operating synchronous power sources. This includes switching a bus from an external power source or an APU driven power source to the main power source. This requires parallel operation prior to switching. Switching between unsynchronized power sources can be accomplished within the 20 millisecond goal with the use of solid state or hybrid bus controllers. These components

however, are not practical at high current levels as was noted in paragraph 5.6.

The real problem of providing gapless power occurs during fault conditions. Existing components used to provide fault clearing and fault isolation include thermally actuated devices such as time delay fuzes, circuit breakers and electromechanical contactors. It may8 be difficult to meet the 20 millisecond goal with these components although the time can be reduced substantially from the MIL-STD-704 limits with the use of instantaneous trip magnetic breakers and/or rapid fault clearing fuzes operating in conjunction with special electromechanical contactors. Conventional contactors have typical dropout times of 10 milliseconds with DC coils and 40 milliseconds with AC coils. The relatively long drop-out time with AC coils is due to the "slugging effect" of rectifiers used for converting the AC voltage to DC voltage. A design technique can be employed which will eliminate the "slugging effect" and thereby decrease the drop-out time equivalent to that of a DC coil. This design technique typically consists of a semiconductor switch located between the rectifiers and the coil. The possibility of meeting the 20 millisecond time duration becomes more feasible if a solid state bus controller is used in lieu of the electromechanical contactor. Closing and opening time for these devices is typically 2.5 milliseconds respectively. Solid state and hybrid bus controllers are practical in applications requiring relatively low current switching, i.e., a bus of limited capacity. Typically, the limited capacity bus serves power only to those loads which are sensitive to power interruptions. Minimum power interruption is accomplished by transferring the bus to a battery powered inverter. The transfer device is either a solid state or a hybrid bus controller.

A technique for minimizing the possibility of a power loss is to have utilization equipment supplied power from a multiple of sources. The equipment contains redundant power supplies with their outputs diode isolated. This technique does complicate the design of the utilization equipment and requires additional power distribution circuits.

5.8 POWER DISTRIBUTION AND CONTROL STUDY

The Power Distribution and Control Subsystem (PDS) for an advanced aircraft is projected as being centered around the EMUX power control concept. The EMUX implementation is envisioned to exist for all but the very simplest of electrical systems. The "breakeven" point for selecting EMUX over the conventional electrical system architectures varies depending upon life cycle cost contributions from maintainability, reliability, weight and production costs. Figures 56, 57, 58 and 59 illustrate gross trade-offs for mission failure rate, maintenance rate, production costs and weight respectively.

Figure 56 indicates a mission failure rate breakeven point of less than one circuit for preference of EMUX over the conventional PDS. The very low EMUX failure rate is due predominately to the EMUX redundancy and to the low solid-state switchgear failure rates. The failure rates of 0.024 shown in the associated breakeven equation accounts for processor and data bus coupler mission reliabilities.

The maintenance rate for the two PDS concepts is shown in Figure 57 as a function of the number of aircraft circuits. The "staircase" function depicted for the EMUX option results from installation of integral quantities of EMUX remote terminals. These maintenance curves indicate a breakeven point of 20 circuits for preference of EMUX over conventional PDS implementation

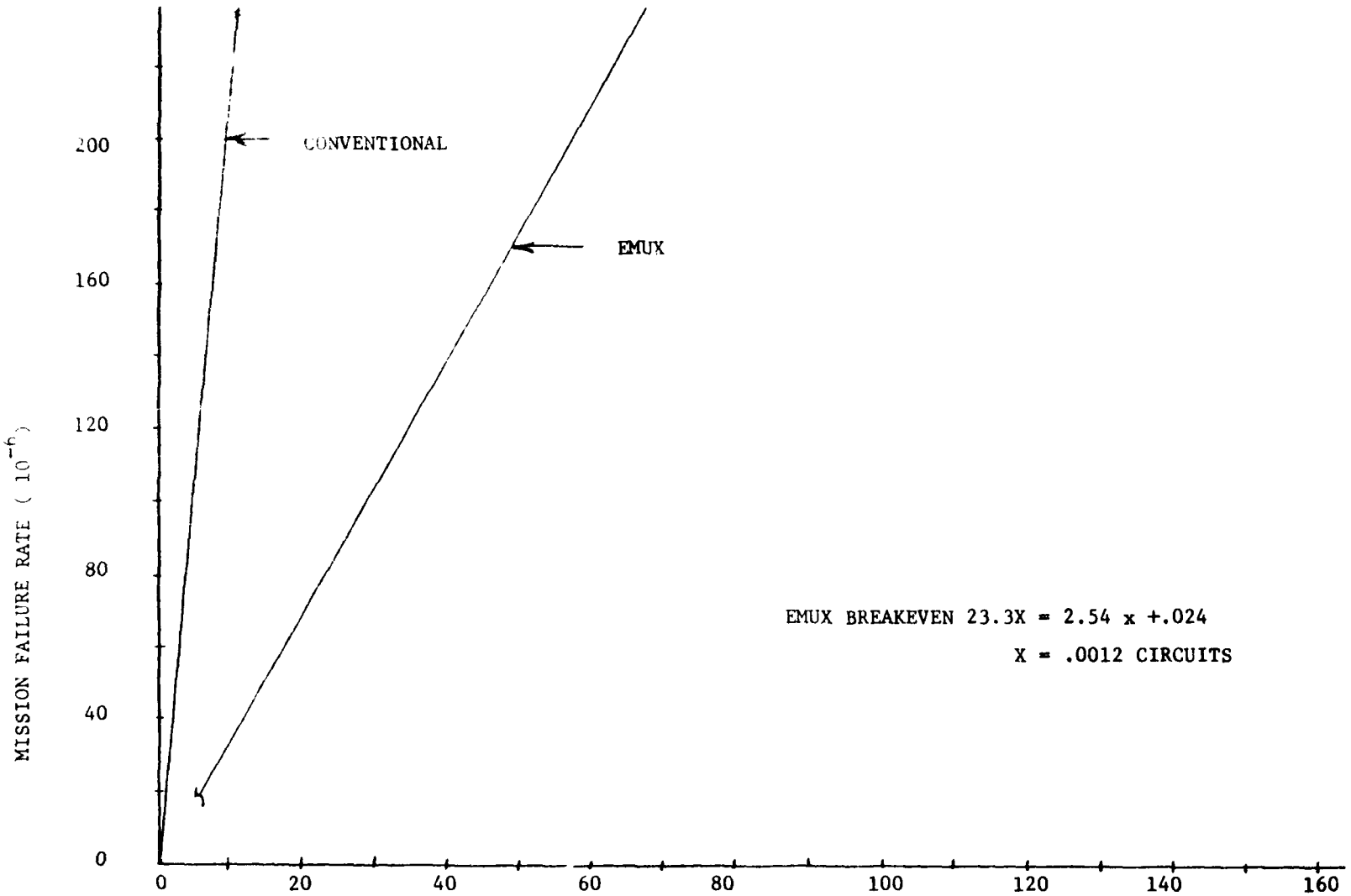

FIGURE 56 POWER DISTRIBUTION MISSION FAILURE RATE VS CIRCUIT QUANTITY

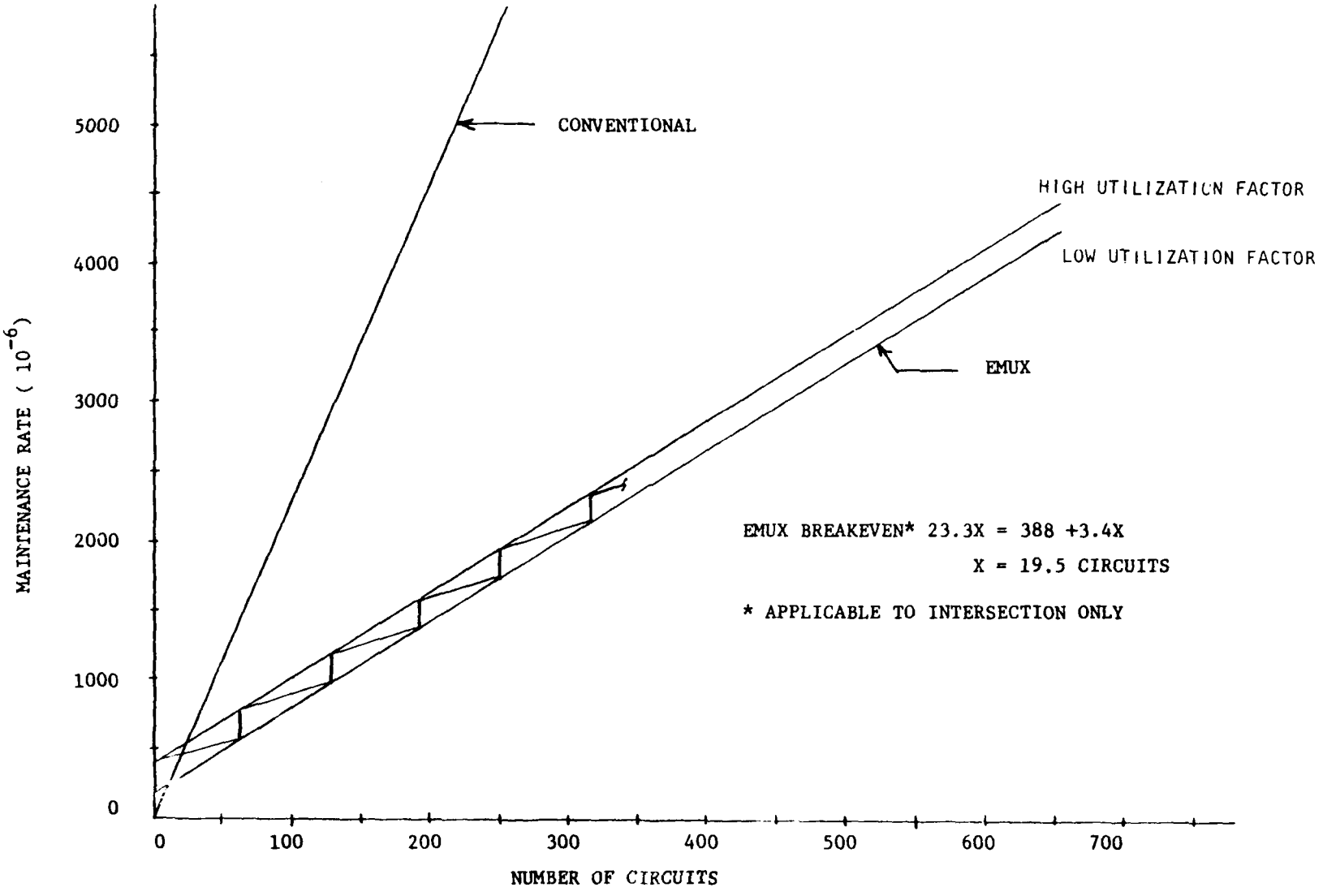

FIGURE 57 POWER DISTRIBUTION MAINTENANCE RATE VS CIRCUIT QUANTITY

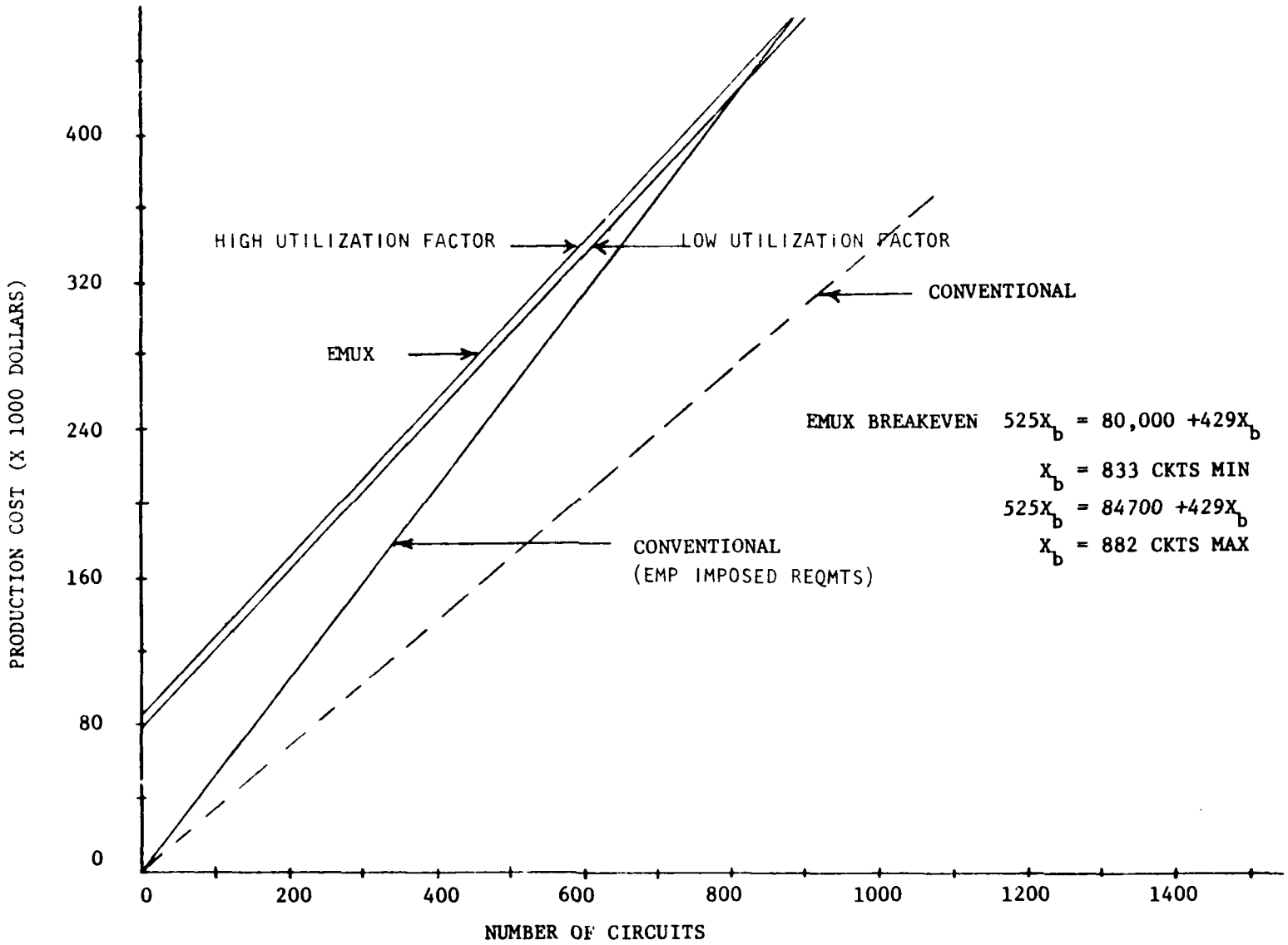

FIGURE 58 PRODUCTION COST VS CIRCUIT QUANTITY

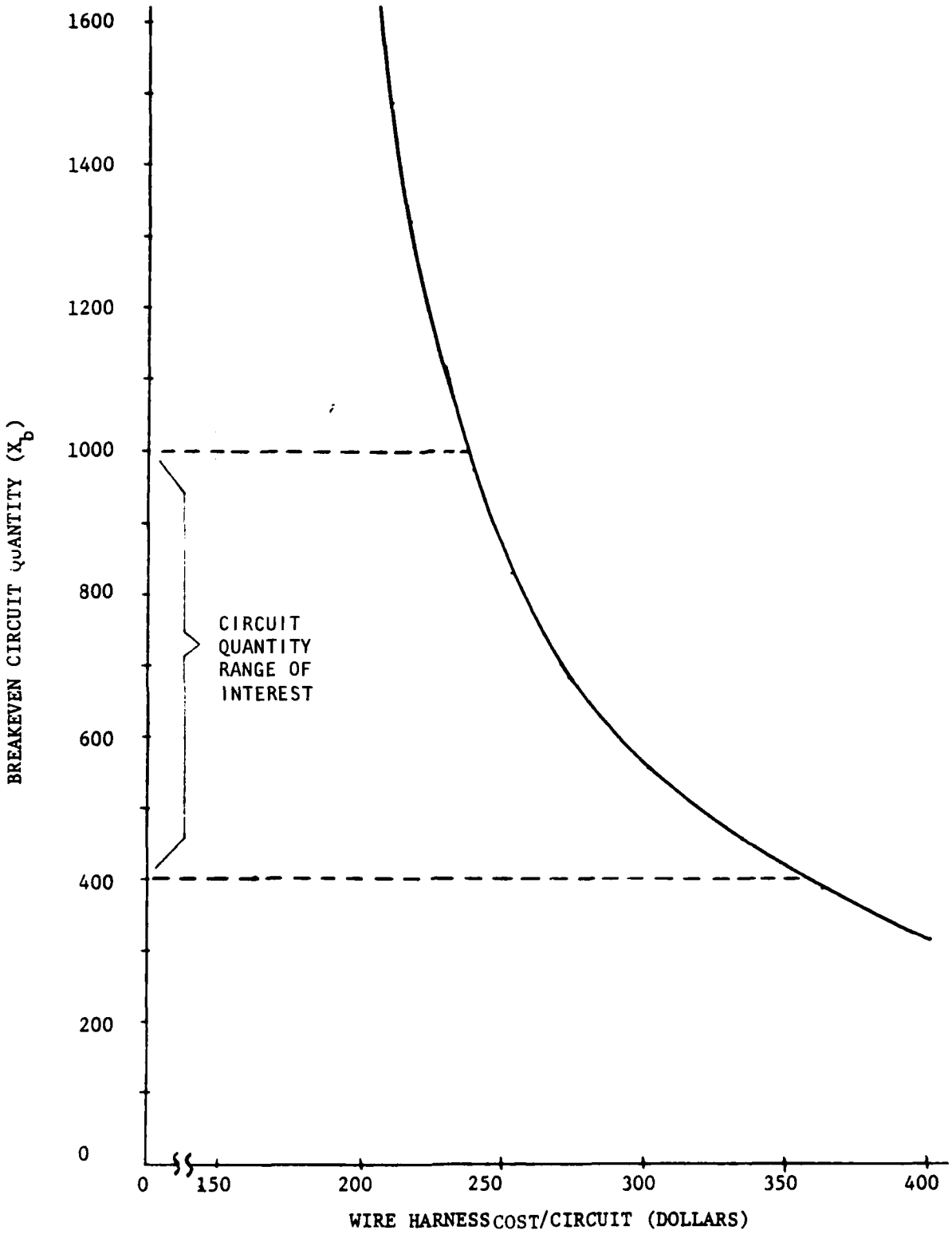

FIGURE 59 PRODUCTION COST BREAKEVEN SENSITIVITY OF EMUX VS CONVENTIONAL SYSTEMS

based solely on maintenance rate. A secondary benefit of EMUX with respect to maintenance activities results from the extensive BIT available for the PDS. The BIT provided by EMUX will significantly improve the manhours/maintenance action for an EMUX based PDS as compared to a conventional PDS. Reference 2 indicated a 27 to 31 percent reduction in average manhours per maintenance action for an EMUX based PDS.

The next life cycle cost factor comparison plot is shown in Figure 58. This figure illustrates projected production costs for the two PDS options. As shown, the EMUX option breakeven occurs between 833 to 882 circuits. The confidence factor for this number is very low, however. The low confidence is due to the high breakeven sensitivity to the difference wire harness costs between conventional and EMUX systems. Figure 59 shows the variation in the breakeven circuit quantity as a function of the harness cost delta between the two PDS concepts. As indicated, the breakeven point is very sensitive to the per circuit harness cost delta in the circuit quantity range of interest. The most important comment that can be made on the plotted data is that unless the conventional system harness cost (per circuit) is at least 235 dollars more expensive than the EMUX system harness cost, the EMUX production cost will be higher than the conventional system. It is not expected that this cost delta would occur on a typical fighter/attack aircraft unless extremely stringent EMP requirements were imposed on the electrical harness.

The dashed line in Figure 58 represents the expected production cost relationship for conventional aircraft with present day design requirements while the solid line represents conventional aircraft with stringent EMP requirements.

The final life cycle cost contributor relationship is illustrated in Figure 60. This figure plots estimated power distribution weight as a function of the total electrical system input and output quantities and were derived from reference 1. The diagonal lines in the figure represent linearized weight growth for EMUX and conventional PDS concepts in aircraft which make extensive use of AMUX.

The relationship between PDS complexity and weight is more clearly visualized when comparing weight savings. The weight savings are shown in Figures 60, 61 and 62 (percentage) and indicate, for example, that an EMUX PDS for a four engine aircraft would yield an approximate 50 percent weight savings over a conventional PDS.

It is possible to assign a dollar value to weight savings for a specific aircraft application. However, since this value is very sensitive to such factors as total weapon system weight, specific fuel consumptions, mission profile (e.g., loiter time, distance to target, climb/descent rates), etc., discussion of specific weight costs for a "typical" single engine and four engine aircraft would have limited value. Recent weight cost values which have appeared in various electrical/electronic system study reports for single and twin engine aircraft range from 300 to 1,200 dollars/pound over the life of one air vehicle. However, a more likely significant use of the saved PDS weight is to permit an increase in the amount of fuel, ordnance of equipment that can be carried on any mission. The cost benefit would then be the value of extended range, increased ordnance delivery, or increased weapon system capability.

To provide a total life cycle cost value for the EMUX and conventional PDS concepts, the relationship (in terms of present value discounted dollars)

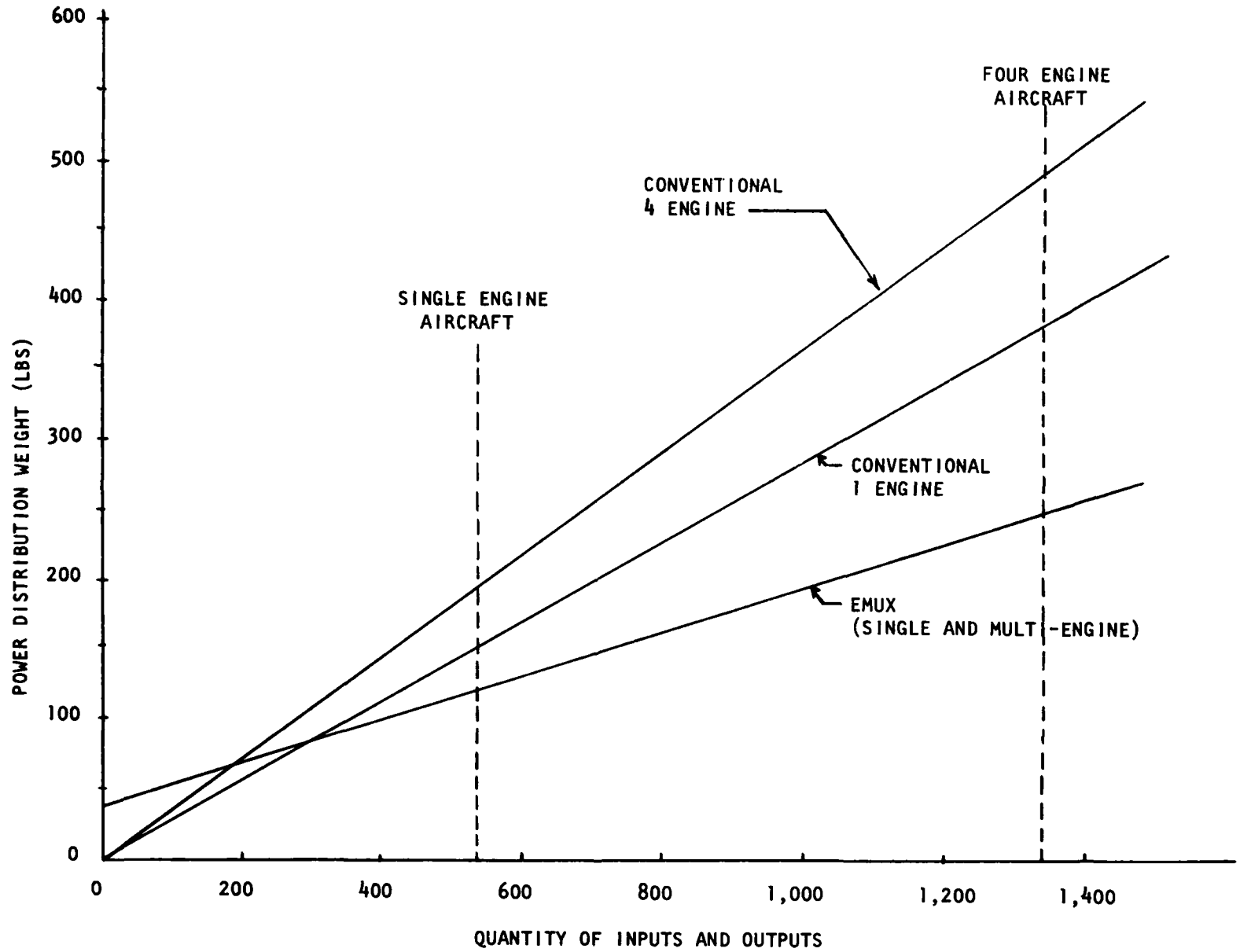

FIGURE 60 POWER DISTRIBUTION WEIGHT VS SYSTEM COMPLEXITY

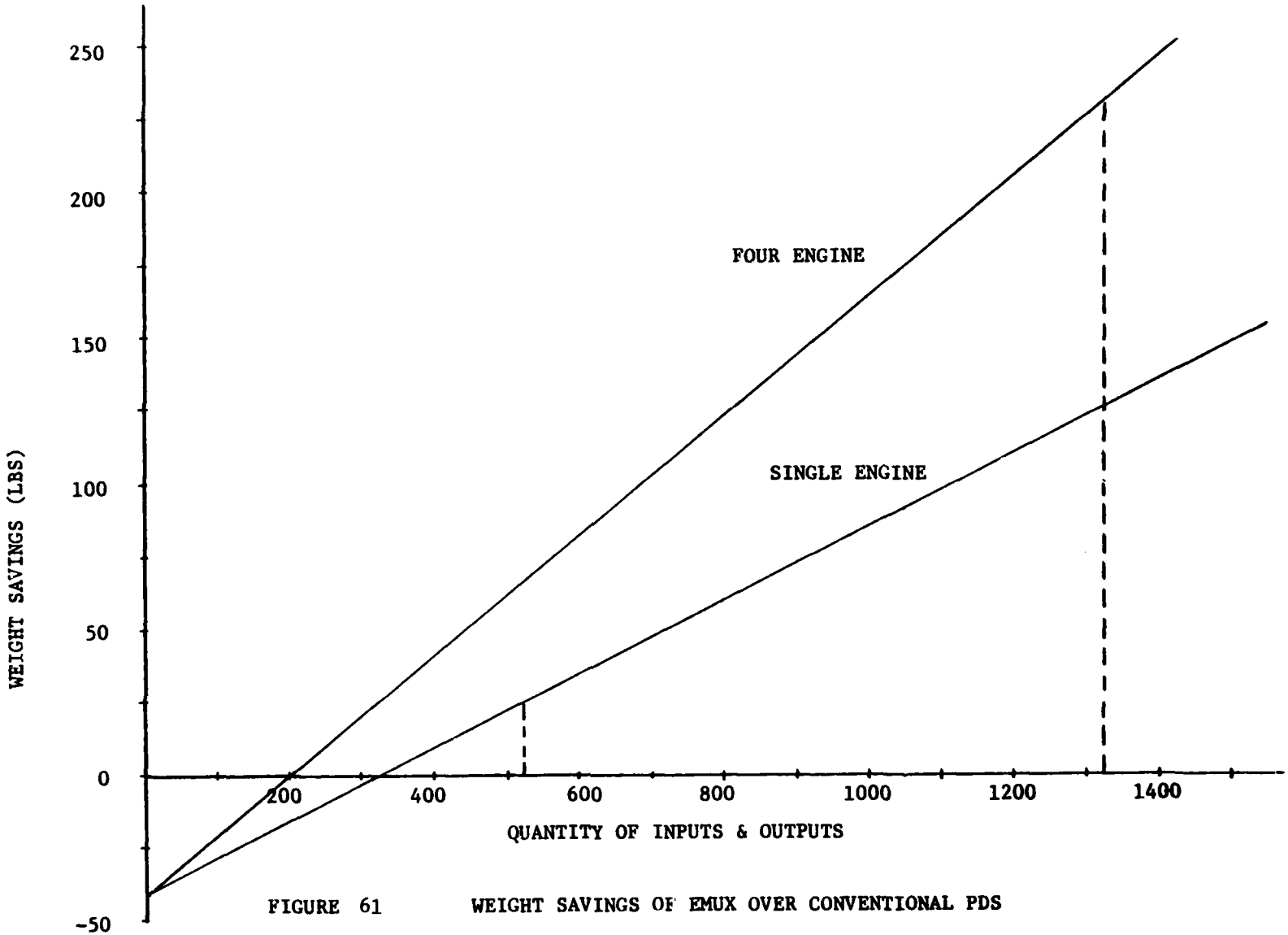

FIGURE 61 WEIGHT SAVINGS OF EMUX OVER CONVENTIONAL PDS

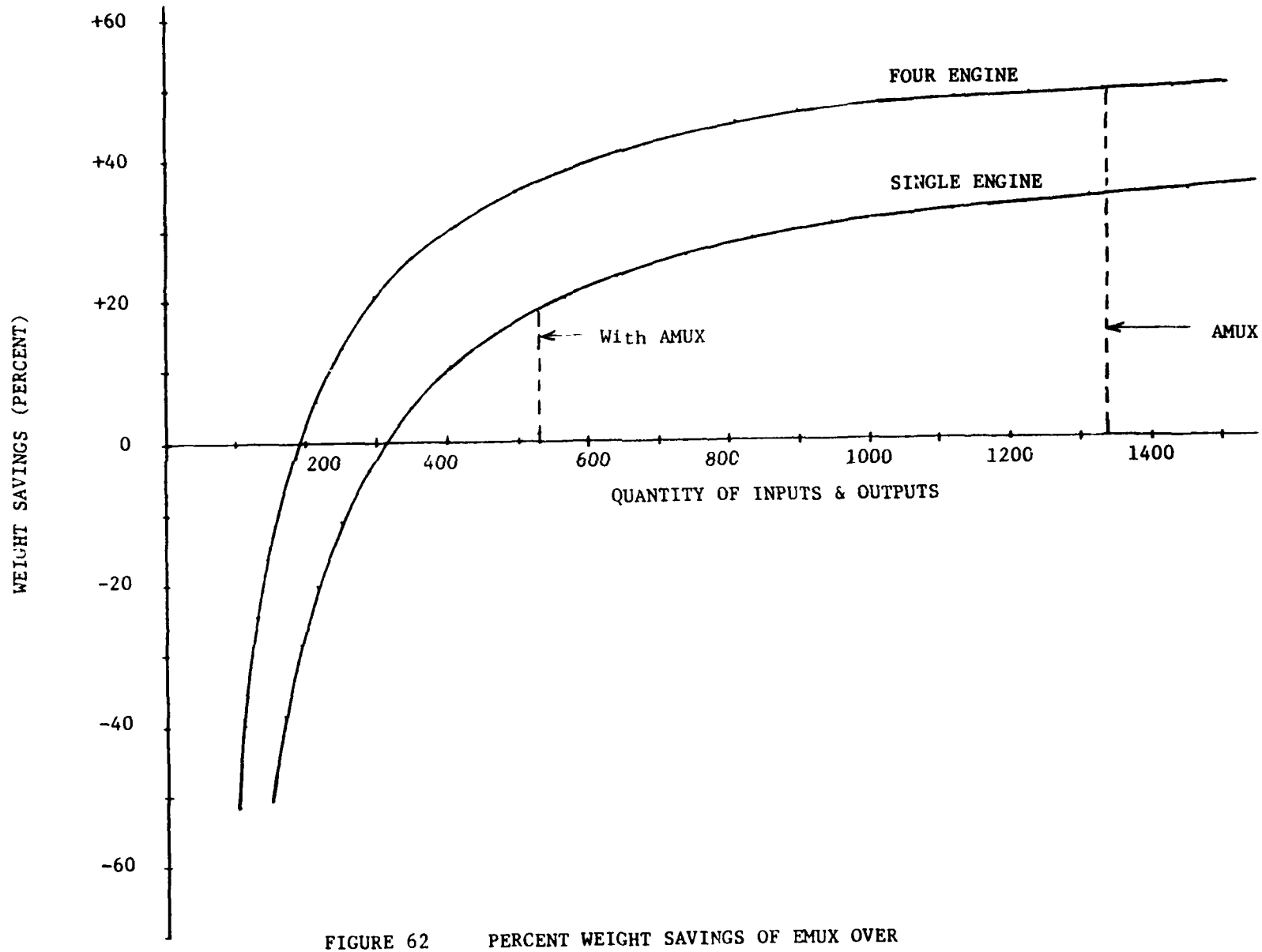

FIGURE 62 PERCENT WEIGHT SAVINGS OF EMUX OVER CONVENTIONAL PDS

between probability of mission success, maintenance, production and weight need to be defined. As implied above, these relative weightings fluctuate widely between aircraft types and mission requirements. As an example, the value of mission completion probability for a B-1 or B-52 on a nuclear weapons delivery run over hostile territory is significantly higher than a similar value for a "training" mission. Unless the ground rules for the LCC analysis are rigorously defined, the dollar result will always be subject to accuracy and debate.

One approach to the LCC analysis would be to define expected values (means) and standard deviations for the respective LCC factor values and calculate an expected LCC along with a standard error and confidence level. The calculations of this approach are fairly straightforward but the data gathering required to produce individual cost factor distributions is beyond the scope of this study.

Although a detailed LCC analysis is unwarranted, a gross comparison of reliability, maintainability, weight and production cost can be achieved and is meaningful in terms of illustrating trends. To accomplish this gross comparison, the following assumptions were made:

- Cost of maintenance manhours = $16/hour
- Average manhours/maintenance action = 2.5 for conventional
  = 1.825 for EMUX
- Flight hours/month/aircraft = 35
- Aircraft life = 10 years
- LCC cost sensitivity to weight = $750/pound
- Cost of mission abort = $7500

A composite cost (C_T) can then be derived by weighting each of the various cost contributors considered. The composite cost equation is of the form:

$$C_T = K_R + K_W W + K_M MR + K_P PC$$

where: = failures (mission)/10^6 hours

W = weight in pounds

MR = maintenance actions (MA)/10^6 hours

PC = production cost

and weighting factors:

- K_R = 3.024×10^7 \$/(failure/10^6 hours)
- K_W = 750 \$/pound
- K_N = 1.23×10^5 \$/(MA/10^6 hours) - EMUX PDS
  = 1.68×10^5 \$/(MA/10^6 hours) - Conventional PDS
- K_p = 1

From Figures 55, 56, 57 and 58, a composite cost equation can be derived for an EMUX and conventional system. These equations (as a function of the number of circuits) are:

$$C_{T(EMUX)} = 3.024 \times 10^7 (2.54 \times +.024) + 750 (.308 \times 39.5) + 1.23 \times 10^5 (3.4 \times 388) + 1 (429 \times +8 \times 10^4)$$

$$= 7.722 \times 10^7 x + 4.856 \times 10^7$$

$$C_{T(CONV)} = 3.024 \times 10^7 (23.3X) + 750 (.647X) + 1.68 \times 10^5 (23.3X) + 1 (525X)$$

$$= 70.851 \times 10^7 X$$

Equating the two composite costs indicate that an EMUX based system would be "cheaper" in all instances.

Closer examination of the two composite cost equations result in the following observations:

(a) For ultra-simple systems (less than 5 circuits) the "fixed" maintenance and reliability costs dominate the composite cost of the EMUX based system.

(b) Weight and production cost factors are totally dominated by the R&M cost factors over the entire range of system complexity.

In a general, generic sense, EMUX encompasses computerized data processing and multiplexed data transfer. When implemented with remotely located multiplex/demultiplex terminals which communicate with central data processors, virtually all electrical system information is transferred as low energy digital data over common data bus(s) rather than as "high energy" electrical flows over dedicated wires. The high energy transfer requirement is therefore simplified. With EMUX delivery of useful power from the power bus to the load is a direct and very short path, routed through a load controller for circuit protection and switching logic control. No intervening logic is required between the load controller and the load. This minimizes wire length, harness complexity and hardware weight while improving system flexibility. In addition, by eliminating high energy logic processing with relays, switches, etc., inherent reliability improvements are possible due to the reduction in the quantity of voltage stressed and thermal stressed logic switching devices (i.e., relays and switches).

The EMUX concept provides flexibility in implementing the power distribution switching/protection functions with either electromechanical or solid state hardware. Table 43 compares the various characteristics of electromechanical and solid state load controllers. The most important parameters are power dissipation since it affects system efficiency, failure rate, weight, volume and cost.

TABLE 43

COMPARISON* OF POWER SWITCHING/PROTECTION HARDWARE

	ELECTROMECHANICAL	SOLID STATE
Power Dissipation (Efficiency)	2.75 watts (0.995)	16 watts (0.975)
Failure Rate	20 failures/10^6 hrs	2.4 to 10 failures/ 10^6 hrs
Weight (Device only)	0.735 lbs.	0.188 lbs.
Volume (Device only)	15 in^3	4.1 in^3
Cost	#250	$50 - 250
Voltage Drop	0.50 volts	3.2 volts max @ -54°C 2.8 volts max @ 100°C
Turn-on Time	30 mx max	1.5 ms max
Turn-off Time	12 ms max	2.0 ms max
Rupture Current**	3600 amperes	>>3600 amperes
Current Limiting	Not practical	270 - 330% (optional)
Turn-on Energy	38 joules max	<< 1 joule
Overload	200%	>> 200%
Leakage Current	∿2μ amperes	>500μ amperes

*Comparison based on 5 ampere rated device operating at 80 percent rating.

Electromechanical data based on MIL-C-83383/20, Solid State data based on MIL-P-81653/4 as modified by NADC-30-TS-7602/3.

**Rupture current is that value of current in a circuit which reflects the capabilities of the power source without the effects of the power switch.

The solid state power controller reliability is very sensitive to the average exposed operating temperature. This relationship is shown in Figure 63. The diagonal lines in the figure define the relationship between the thermal resistance from SSPC case to ambient for various ambient temperatures and the impact on SSPC failure rate. For example, if the SSPC installation design is such that a $1^{\circ}C$/watt thermal resistance from SSPC to ambient air is provided, the SSPC MTBF (at an average ambient temperature of $71^{\circ}C$) will be approximately $.11 \times 10^6$ hours. This yields a failure rate of 9 failures/ 10^6 hours.

Most present generation avionic systems are designed for a maximum ambient of $71^{\circ}C$ (MIL-E-5400 Class 2). For this reason it is not reasonable to use $71^{\circ}C$ as the average ambient temperature, when $71^{\circ}C$ represents the maximum rated temperature. The maximum temperature should be used for establishing design margins for the SSPC. However, use of maximum temperature as the average temperature for the purpose of establishing weapon system reliability projections will result in misleading reliability projections.

It is envisioned that a thermal resistance of between 1 and $2^{\circ}C$/watt can be easily provided. This will yield a range of SSPC failure rates from 2.4 to 10 failures/10^6 hours assuming an <u>average</u> ambient temperature of 25 to $60^{\circ}C$. These failure rates can, of course, be improved by using forced air, liquid or vapor cooling techniques.

In general, load controllers are defined by MIL-P-81653. However, in the interest of minimizing the number of controller types, i.e., ratings, the use of hardware programmable trip settings may be desirable. This would permit stocking only one controller type (part number) for all aircraft controller requirements. The optimum number of trip levels for a programmable controller

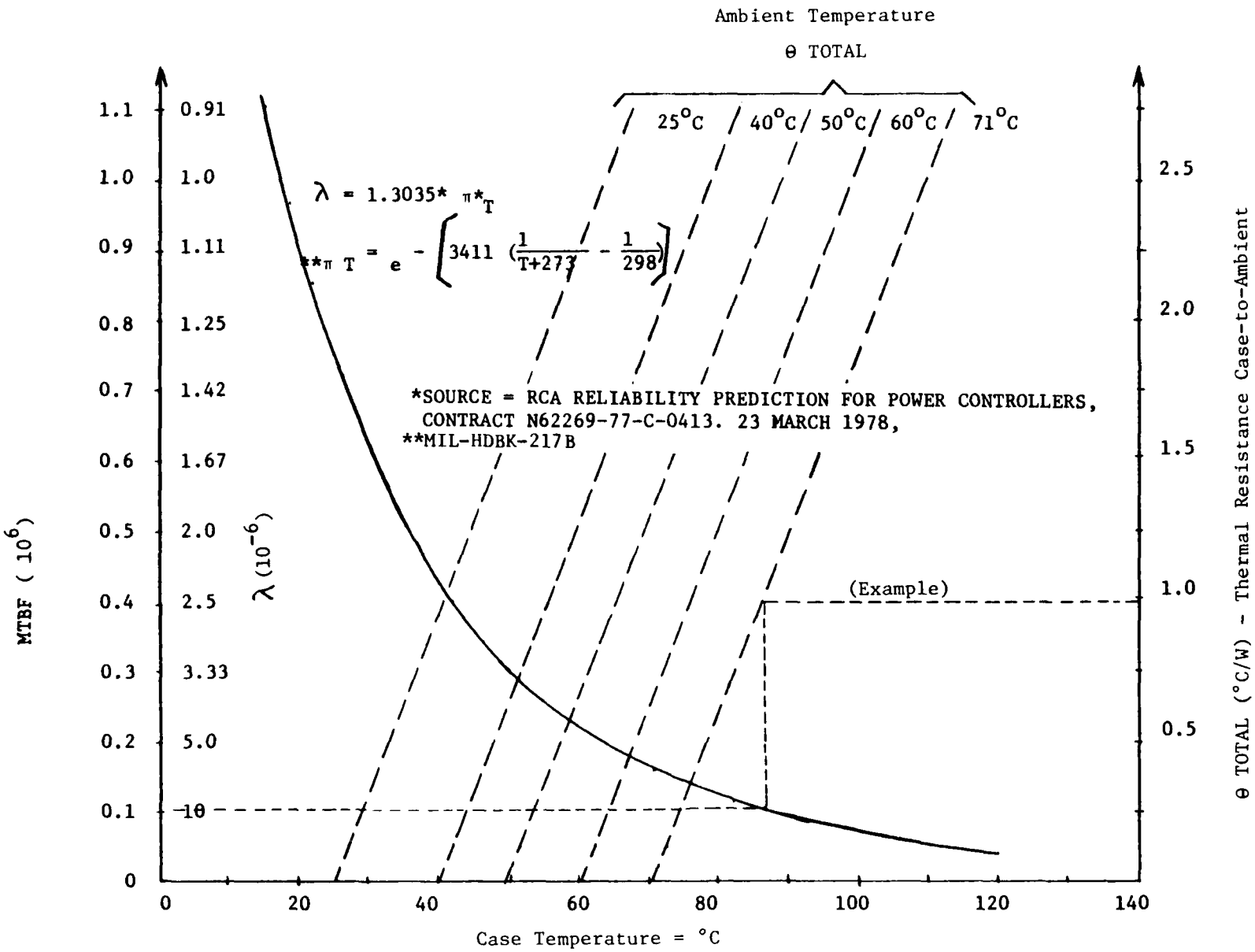

FIGURE 63 RELIABILITY PREDICTION FOR POWER CONTROLLERS

is influenced by several factors. One factor is the number of channels (poles) selected for the controller, i.e., single channel versus multiple channel. The choice of single versus multiple channel is established by the selected LMC concept.

An optional LMC configuration to the conventional LMC configuration integrates the universal terminal with trip level programmable SSPCs. This Integrated Load Management Center (ILMC) is depicted in Figure 64. This approach is only practical if multichannel programmable SSPCs are available. These multichannel SSPCs can be provided as plug-in modular "strips" as illustrated in Figure 64 or as an integrated part of the universal terminal. The use of a removable power output section would be desirable so as to permit configuring the universal terminal as an ILMC terminal or as a general I/O terminal not associated with a LMC.

Whatever approach that is used for SSPC installation, the SSPC failure rate will be anywhere from 12 to 50 percent of the electromechanical controller failure rate of 20 failures per milliin hours.

Use of solid state controllers is recommended over electromechanical controllers for the advanced electrical system for the following major reasons:

- Lower failure rate (12 to 50 percent of EM)
- Lower weight and volume (25 to 27 percent of EM)
- Lower non-recurring cost (20 to 100 percent of EM)
- Lower turn-on/turn-off delays (5 to 16 percent of EM)
- Higher interrupting and overload capacity

These factors override the disadvantages of the slightly lower (2%) efficiency due to voltage drop and the possibility of higher leakage current. It should be noted, however, that SSPC leakage current can be dropped significantly

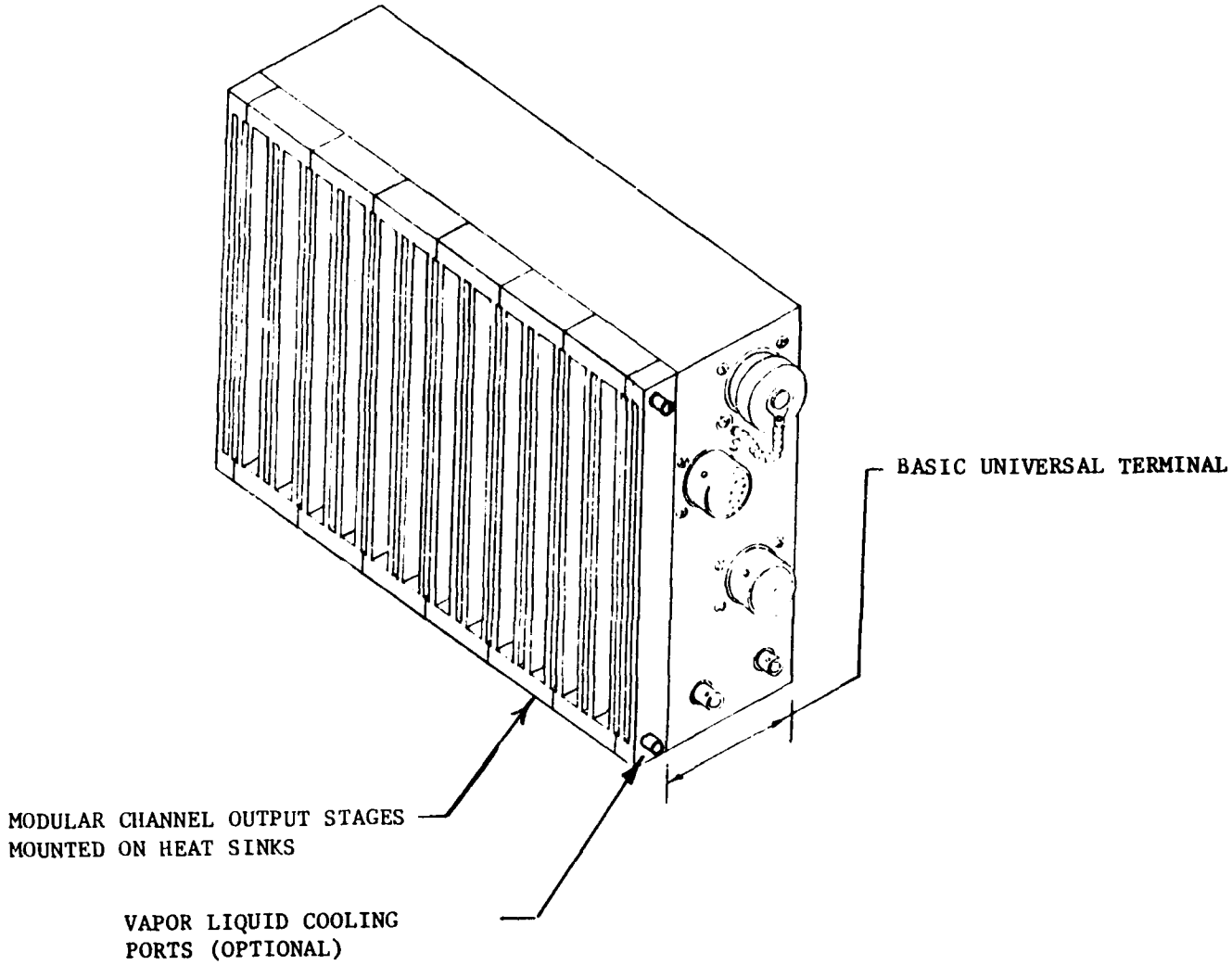

FIGURE 64 INTEGRATED LOAD MANAGEMENT CENTER CONCEPT

below the 500 micro-ampere specification limit by using a clamp circuit inside the SSPC.

Additional investigation of the feasibility of integrating the demultiplexer and load controller functions into a common WRA (Weapon Replaceable Unit) is required. However, as presently envisioned, this LRU consists of a redundant multiplex/control section, a redundant power supply section, and a non-redundant power switch section. This LRU replaces the 64 LRUs presently used to implement the LMC function, i.e., the demultiplexer and 63 power controllers and the interconnect wiring. Functional block diagrams of the two concepts are shown in Figures 65 and 66. This new LRU, therefore, consolidates the control logic functions presently being performed in each of these stand-alone WRAs. It is envisioned that microprocessor or Programmable Logic Assembly (PLA) technology can be effectively used to accomplish the required functions and achieve the desired integration for producing an ILMC.

Significant improvements that are yielded by the ILMC are:

- Reduced electronic complexity - approximately 50 percent of the aggregate electronics of 63 load controller electronics used for the signal level control functions and internal supplied power.
- Simplified signal interface - the elimination of the wire terminations needed to interface the 63 controllers to the demultiplexer.
- Power reduction - reduction in the signal control power presently needed for [illegible] unity which is of the order of 10 watts considering power supply inefficiency.
- Reduced size - consolidation of the 64 individual LRUs into the one LRU eliminates multiple housings, mountings, interconnect wiring and duplicate electronics.

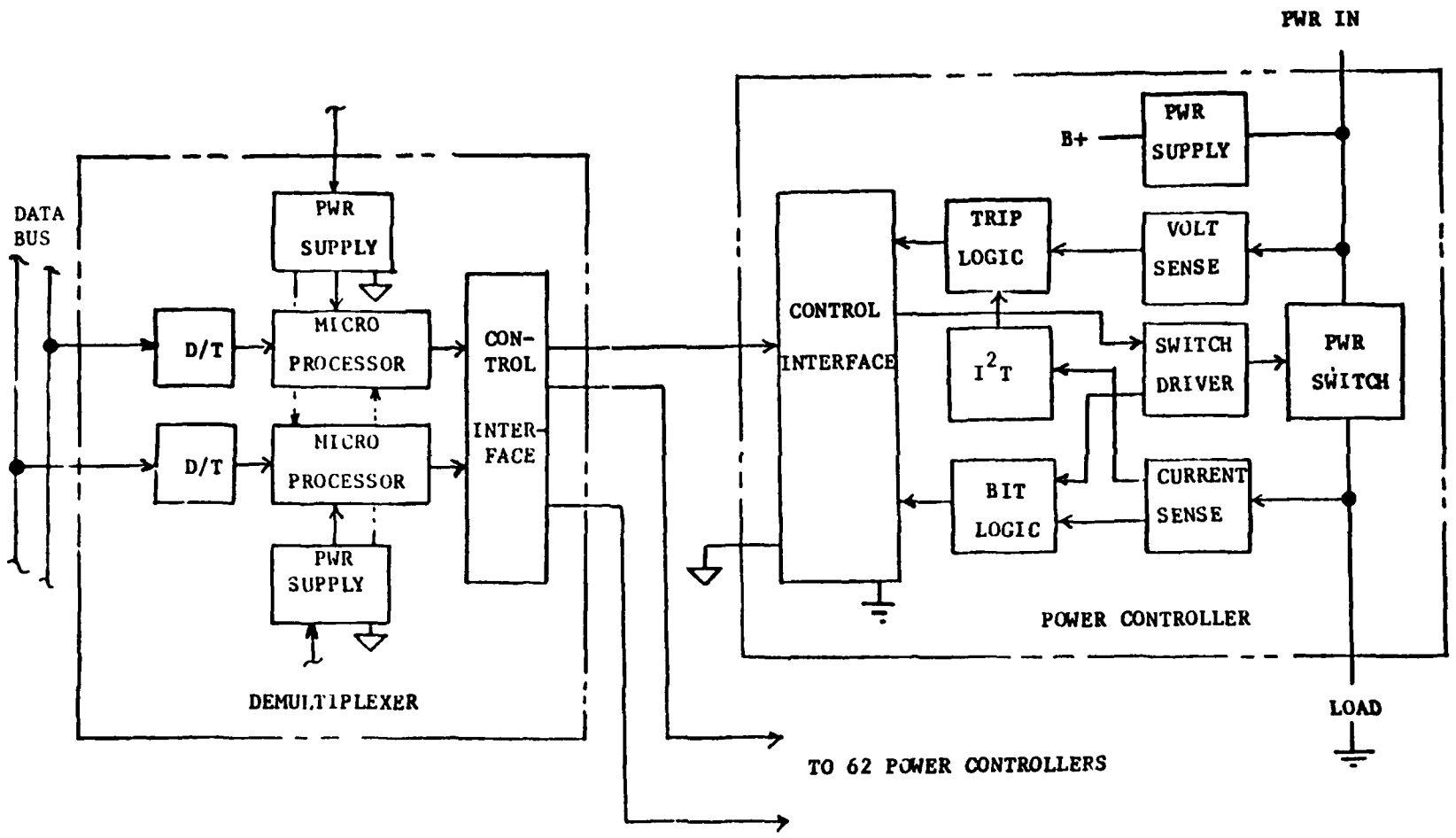

FIGURE 65 EXISTING LOAD MANAGEMENT CENTER CONCEPT

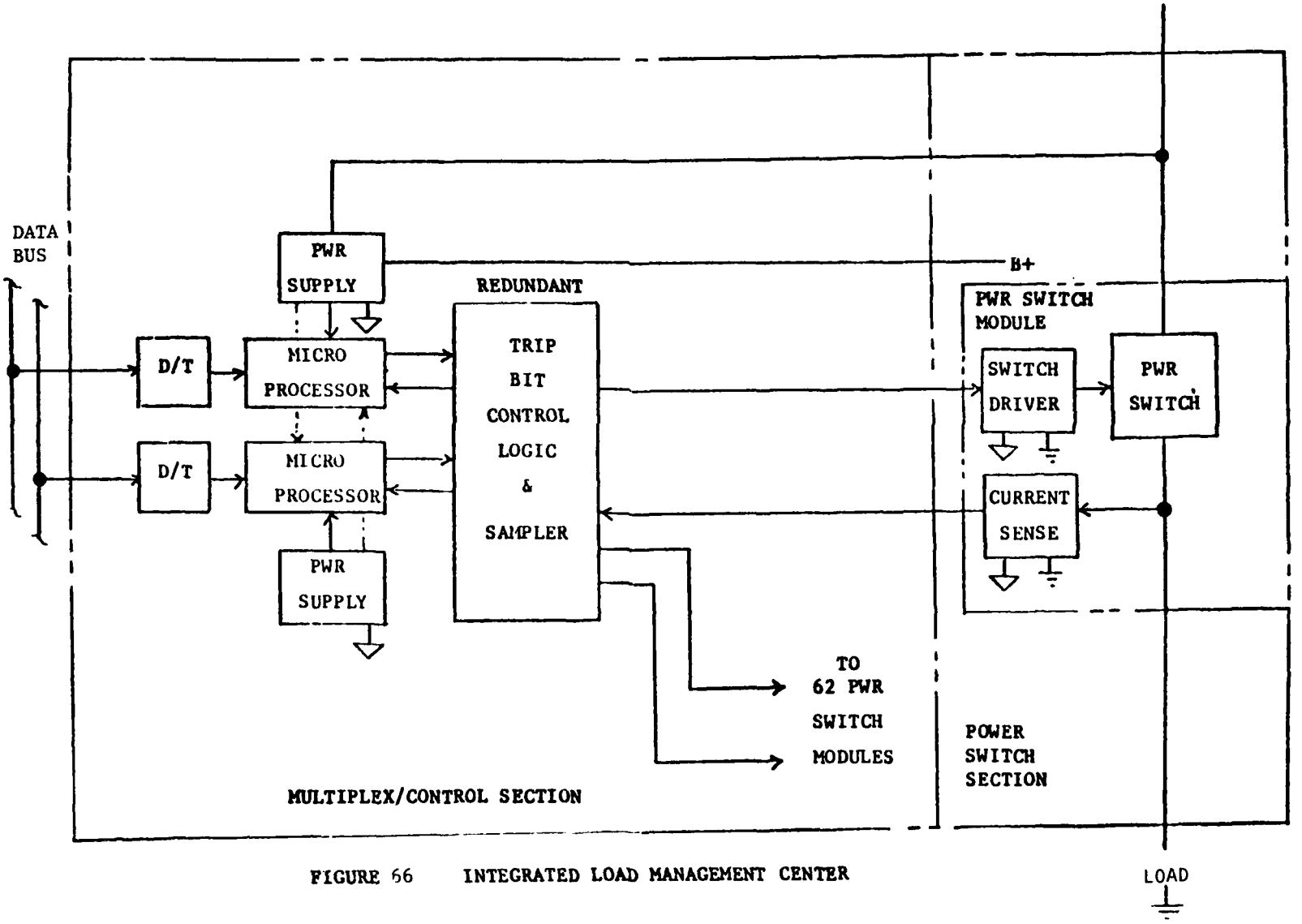

FIGURE 66 INTEGRATED LOAD MANAGEMENT CENTER

- Improved reliability as a result of:
  - Consolidated electronics and power supply functions significantly reduces total parts count.
  - Applying LSI. The ILMC is more conducive and cost effective for applying LSI because it is performed at a higher tier level.
  - Simplified signal interface, i.e., the elimination of the external signal interface and terminations between 63 controllers and demultiplexer.
  - Extended redundancy, i.e., the ILMC has full redundancy except for the individual channel output power stages. This is essentially a "free" improvement since the microprocessor controller and power supply needed for the demultiplexer functions may be used for the load controller logic and power supply functions.
- Improved system flexibility - perhaps the greatest potential benefit is derived by being able to "program" each individual output power channel for the desired current rating, i.e., trip level. This combined with the smaller, more reliable unit allows more versatility in locating the LMC in the optimum locations within the aircraft weapon ssystem.

5.9 POWER BUS ARRANGEMENT STUDY

Previous studies (reference 2) have shown that a distributed LMC bus system minimizes system weight and decreases vulnerability. The level of bus distribution depends on several predominant factors:

- Spatial distribution and installation density of utilization equipment

- Total quantity of equipment, and
- Packaging density limits for load controllers

The level of LMC distribution was studied in some detail in reference 2 and 3 for the A-7D single engine attack aircraft. Results from these studies are summarized below.

LMC locations in aircraft can be established by implementing one of two concepts. The first approach is to install one LMC at the aircraft load centroid. This LMC will service all aircraft loads and would therefore contain the full set of aircraft load controllers. In addition, this centralized LMC will contain the generation system point-of-regulation since no other LMCs exist. With this concept, the bus management system will be very simple since a sub-bus feeder network is not required. The power source feeders will route directly to the LMC rather than to a set of main power bus centers. The major problems with this concept are: (1) high level of vulnerability to battle damage, (2) large concentrated volume required for installation, and (3) total system weight is higher than with distributed LMCs due to the relatively long wires to individual loads.

The distributed LMC concept is the second and more reasonable approach. While this second concept requires establishment of main power bus centers and a sub-bus feeder network, the system vulnerability is significantly improved along with reducing the total weight of the bus management and power distribution subsystems. Figure 67 depicts the results of a weight analysis to determine a "weight optimal" LMC distribution. As shown in the figure, the relative bus management subsystem weight increases as the number of distribution centers increase. The bus management weight includes feeders, feeder protectors and the LMC hardware. As the number of LMCs increase, the

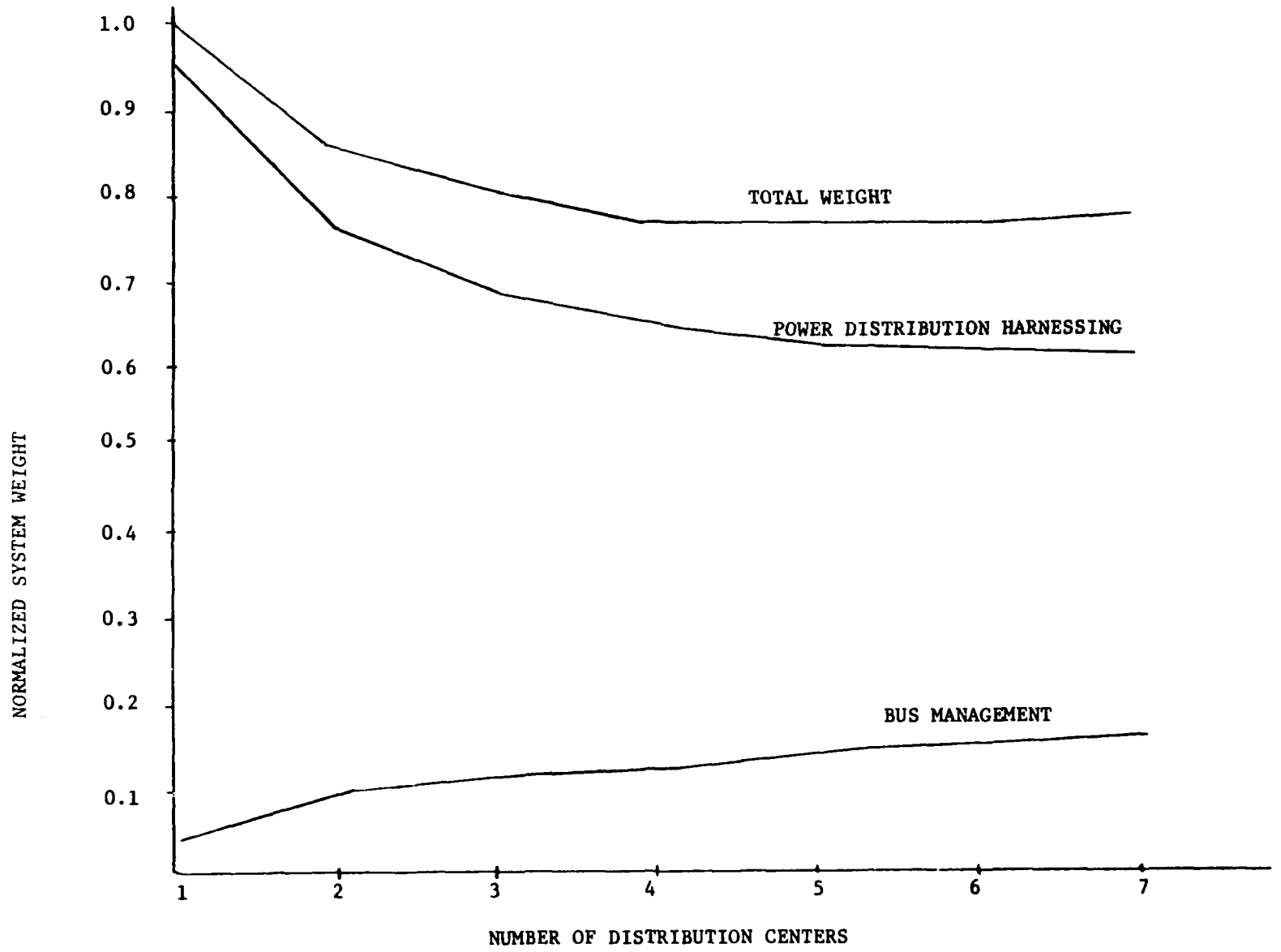

FIGURE 67 NORMALIZED SYSTEM WEIGHT VS DISTRIBUTION CENTERS FOR SINGLE ENGINE AIRCRAFT

number of feeders and feeder protectors increase linearly. In contrast, the LMC weight change is non-linear due to packaging factors for the load controllers and associated hardware. As the number of load controllers in a given LMC decreases, the proportion of LMC housing and sub-bus hardware costs incurred by each controller increases.

While the bus management subsystem weight rises with an increase in LMC quantities, the power distribution harness weight decreases. The harness weight decrease follows the law of diminishing returns. After six distribution centers, the bus management weight increase exceeds the harness weight decrease for each additional LMC. As shown in the figure, however, a selected LMC quantity of between four and seven would have little impact on the system weight. The optimum number of LMCs for the A-7 example is therefore five. This representative bus layout is illustrated in Figure 2.

It should be noted that the bus management and power distribution weight for the distributed bus arrangement is approximately 80 percent of the centralized concept. Simply by changing the bus distribution concept, a 20 percent weight reduction can be achieved while at the same time, improving the system vulnerability. It should also be re-emphasized that the optimum LMC quantities will vary with aircraft specifically due to the distribution of utilization equipment in the aircraft.

5.10 SAFETY DESIGN CRITERIA AND REQUIREMENTS

Safety design criteria was a consideration in the evolvement of the electrical system as implemented using advanced integrated control techniques. In most conventional aircraft, primary flight controls are mechanically actuated, hydraulically powered with adequate aerodynamic stability to permit all flight

phases without electrical power. Criteria applicable to these older or less advanced aircraft basically remains applicable to aircraft employing the advanced integrated control techniques described in this report. The task of compiling a safety design criteria for aircraft advanced electrical systems is influenced by several factors. Until the advent of computer controlled airborne electronic equipment in manned aircraft, electrical system design has been relatively safe. The problems which have arisen have not been associated with difficulties in the operating of the electrical system, but primarily with difficulties in fabrication and installation of that system. Design criteria for aircraft electrical power systems have addressed, for the most part, practices which attempt to reduce or eliminate hazards caused by placing the electrical system within the airframe.

Traditionally, the number of aircraft accidents directly caused by electrical system failures has been much smaller than that caused by other aircraft systems, such as hydraulic and propulsion. There are two means by which an electrical system can threaten the safety of the aircraft. Either the power system fails, resulting in loss of some critical function (e.g., the all attitude instrument system) or the electrical system causes a fire (e.g., wire bundles chaffing against aircraft structure or high pressure hydraulic hoses). Prior efforts that have been expended to insure that these types of failures do not occur apply equally to aircraft using advanced integrated technologies.

In some respects, these problems may be less likely to occur with a solid state system. There are fewer wire bundles, and those that exist are substantially reduced in volume which allows the system to be more ideally installed (location plus protection). There are also fewer connectors and the power controlling units are self contained.

In the future, however, the advent of control by electronic signals commanded by computers will require complex redundancy which implies a growth over present conventional wiring and connectors. The chances for a failure which could lead to loss of power to or fire substantially increases. In addition, the results of power loss become catastrophic. To reduce these hazards, solid state technology should be used. Multiplexing reduces the number of places that wiring failures can occur. Most importantly, the EMUX system can be made to meet the redundancy requirements without complicating and enlarging the overall electrical system. This requirement will become paramount in FWB (Fly-By-Wire) aircraft.

The advanced integrated electrical system offers operational advantages not possible in conventional electrical systems. The advantages are attributed to the BIT and load monitoring functions contained in the EMUX system. In order to take fullest advantage of these capabilities, operational flight phases can be identified and load/equipment priorities established.

5.10.1 SAFETY DESIGN REQUIREMENTS FOR THE ADVANCED AIRCRAFT ELECTRICAL SYSTEMS

The following is a list of safety design requirements applicable to all aircraft electrical systems including systems containing integrated control techniques.

(a) Route wires and locate components so they do not create interference with adjacent systems.

(b) Design systems with an absolute minimum of connections and terminations.

(c) Ensure that primary and redundant system circuits are not supplied from the same power bus or power controller.

(d) Ensure that elements of a redundant system do not pass through the same connector used by elements of the primary system.

(e) Avoid termination of power and signal leads on adjacent pins of connectors.

(f) Provide supports to prevent abrasion or chaffing of wires and cables.

(g) Route wires that are attached to normally moving parts to twist with rather than bend across adjacent moving parts.

(h) Do not allow several critical electrical components to be protected by a single power controller.

(i) Provide electrical shielding whenever it is necessary to suppress radio frequency interference and other sources of spurious energy.

(j) Provide protective devices for primary circuits and equipment to protect from overloads.

(k) Ensure that system operation is not degraded by temperature extremes.

(l) Avoid routine electrical wire bundles adjacent to fuel lines, hot air ducts, or mechanical linkage.

(m) Locate wire bundles away from ejection controls.

(n) Design to enhance protection from lightning strikes.

(o) Provide positive protection for terminal blocks to prevent short circuits resulting from contact with debris or elements of the environment.

(p) Main power ON-OFF switch located on the equipment is clearly labeled (where applicable).

(q) All equipment external parts, surfaces and shields (exclusive of antenna and transmission line terminals) are at ground potential at all times during normal operation.

(r) External or interconnecting cables must have a ground wire in the cable terminated at both ends in the same manner as the other conductors (ground is part of the circuit).

(s) Except for coaxial cables, shields are not used for current-carrying ground connections.

(t) The path to ground from equipment:

(1) Is continuous.

(2) Has ample carrying capacity to conduct any operating or fault current imposed.

(3) Has impedance low enough to limit the potential above ground and facilitate the operation of overcurrent devices in the circuit.

(4) Has inactive wires grounded that are installed in long lines (conduit or cables).

(5) Has sufficient mechanical strength of the material to minimize possibility of ground disconnection.

(u) Shielding on wire or cable is secured to prevent contact with exposed current-carrying parts or grounding to the chassis at any point other than the ground termination.

(v) Shielding on wire or cable ends at sufficient distance from exposed conductors to prevent shorting or aching.

(w) Connectors providing separation of, or connection to, multiple electric circuits that are designed such that it is impossible to insert the wrong plug in a receptacle or other mating unit.

(x) Where the above item is not practical, mating plugs and receptacles are clearly coded or marked to indicate mating connections.

(y) All remotely located assemblies have provisions for safety switches to allow independent disconnect in the associated equipment.

(z) Materials, as installed in the equipment and under service conditions specified in the specific equipment specification, do not liberate gases which combine with the atmosphere to form an acid or corrosive alkali, nor liberate toxic or corrosive fumes which would be detrimental to the performance of the equipment or health of equipment operators.

(aa) Failure of one phase of a three-phase power electrical system does not result in an unsafe condition.

(ab) For those equipments which require both ac and dc, power failure of either dc or ac power source does not result in an unsafe condition.

(ac) Dissimilar metals are not used in intimate contact within electrical systems unless suitable protected against electrolytic corrosion.

(ad) Static ground provisions are made for the discharge of accumulated charges of static electricity by bringing the aircraft to ground potential.

(ae) Electrical equipment is installed with considerations to protection of exposed terminals by orientation or insulating covers and is located below drip points and tube fittings carrying fluids.

(af) The generator is capable of operation at 110 percent of the maximum rated input speed for 5 minutes after having stabilized thermally and while operating at full rated load and minimum input speed.

(ag) Under any normal system operating conditions including initial power up and application and removal of loads, overloads, and faults, nuisance tripping does not occur. Protection from the following malfunctions is provided: Overvoltage, undervoltage,

under frequency, feeder faults, extraneous frequency content, symmetrical component voltage content, generator underspeed.

(ah) Electrical connections are so arranged and wired that not leads are not terminated in pins or other exposed contacts which might be accidentally shorted or touched.

(ai) All electrical components are made explosive proof, i.e., so that units or components cannot cause ignition in an ambient explosive gaseous mixture with air.

(aj) Safety margins for equipment are used if EMC problems may result in catastrophic failures. Unless otherwise specified, safety margins less than 6 db (20 db for explosives) are not used.

(ak) Wiring and cabling are designed to minimize coupling and obtain optimum separation and use of available wiring space. Cable design includes provisions for adequate termination of shielded wires.

(al) The system design includes provisions for protection of personnel from R-F hazards, electromagnetic, electro-static, and shock hazards in accordance with the requirements in MIL-STD-454. When protection by design is not technically feasible, adequate safety precautions are included in operating and maintenance manuals.

(am) Electrical bonding connections are so installed that vibrations, expansion or contraction, or relative movement incident to normal service use will not break the bonding connections nor loosen them so that the resistance will vary during movement.

(an) Bus switching schemes do not allow total electrical failure to occur due to a single point fault within the switching or bus control circuits.

(ao) Interlocks required to control critical subsystem operation are capable of being functionally checked prior to flight, or if that is not practical, the continuity of the control system have provisions for checkout prior to flight.

5.10.2 SURVIVABILITY/VULNERABILITY

Survivability/vulnerability criteria were also considered in the evolvement/application of advanced integrated control techniques. The following paragraphs provide the survivability/vulnerability considerations relevant to comparing conventional electrical systems with advanced control techniques.

Survivability of aircraft electrical/electronic systems can typically be improved by the following methods:

- Vulnerable areas reduced by using smaller components and relocated to less vulnerable locations.
- Existing non-redundant systems are placed with redundant systems. A "black box" which is internally duplicated is not regarded as redundant in terms of survivability. Redundant components must be physically separated so that any one combat hit cannot destroy both components.

The advanced control techniques enhance survivability through reduction of vulnerable areas (especially wire bundles) and through reduction of single-point failure sites by incorporating redundant systems. A review of the design shows the following:

- The multiplex terminals, as well as the processor, are redundant. As a minimum, redundancy is used for system elements which would cause a mission abort. This includes adequate physical

separation as part of the redundancy. Placement of these items are typically governed by space available, but should follow a rule of thumb on placement of components on opposite sides of the aircraft. Use of existing aircraft structure for shielding should also be employed as practicable.

- The multiplexeer data transmission line should be redundant and physically separated. It is noted that a single data bus does not fulfill this requirement, therefore, the redundant data bus used in the recommended design meets the survivability guidelines.
- In general, the control wire (signal source to multiplexer) should be redundant for mission critical items in the samer manner as the transmission line, however, this requirement will not apply if the pair of wires is short and routed to utilize existing protection (cockpit armor, aircraft structure, etc.).
- In the power switching subsystem, the LMCs should be physically protected, wire runs made short, and LMCs be isolated.
- For flight critical systems, e.g., fly-by-wire, completely redundant power channels should be provided.

SECTION VI

STABILITY ANALYSIS AND SYSTEM MODELING

This section discusses the computer simulation programs developed for the IDG and VSCF aircraft electrical systems and describes techniques for establishing the stability of a system.

6.1 Simulation Program Development

The computer simulation programs developed under this contract are structured into four separate modules as follows:

a. GENR

b. GENRDIS

c. PARGEN

d. VSCF

The program names were selected to convey information on the contents of the program. For example, program GENR contains the generator with damper windings and voltage regulation. Program GENRDIS contains the GENR program with the addition of the power distribution system. Program PARGEN adds the effects of parallel operation to the basic GENR program. Finally, program VSCF is the model for the Variable Speed Constant Frequency system. All programs simulate the transient effects on aircraft electrical power systems resulting from load changes and faults, and are useful in determining the stability of the power system. Each program module is a complete program, is written in FORTRAN V, and emphasizes a particular feature of the electrical system. A listing of the features contained in each program is given in Table 44.

TABLE 44

MAIN FEATURES OF THE PROGRAMS

PROGRAM	DAMPER WINDING	CONSTANT SPEED DRIVE	VOLTAGE REGULATOR	ELECTRICAL LOAD	PHASES
GENR	YES	NO	YES	SINGLE, INDUCTIVE	3
GENRDIS	NO	NO	YES	DISTRIBUTION SYSTEM	3
PARGEN	NO	YES	YES	SINGLE, INDUCTIVE	3
VSCF	NO	NO	NO	SINGLE, INDUCTIVE	3

Program GENR is the basic program and contains the model for a three phase, salient pole, synchronous generator with damper windings and a voltage regulator. The constant speed drive is not modeled in program GENR, i.e., the input speed is defined to be a constant. The load is modeled as a single load and consists of a resistor and an inductor. Effects of the CSD and more complex distribution networks are modeled by adding appropriate subsystem models of these elements.

Program GENRDIS contains the basic GENR program and the addition of a power distribution system. The power distribution system which was defined to consist of six feeder networks to the six LMCs is modeled as a three branch network. Four of the feeder-load networks are consolidated into a single lumped load thus making up the three branch network. The program can be easily modified to accommodate a network consisting of additional branches if required.

The effects of parallel operation can be determined by means of program PARGEN. This program contains a model of two separate IDG generating systems operating in parallel. The simulation contains a model of a constant speed drive, a three phase synchronous generator, and the feedback loops that are required to adjust for real and reactive power variation. This program can be used to determine the interaction between the electrical and mechanical transients in the paralleled system.

A variable speed constant frequency generator is modeled in program VSCF. A model of a six phase salient pole generator and a cycloconverter which converts the multiphase, unregulated power to precision 115 VAC, 400 Hz three phase power is included in this program. The distortion in the wave shapes that occur due to the action of the cycloconverter are accurately computed by this program.

6.1.1 Technical Approach

The data used to develop these programs was obtained from a variety of sources. The voltage and torque equations for the IDG generator were obtained from Concordia, reference pp. 8-14, and Appendix B. The equations for the voltage regulator, constant speed drive, and parallel operation were obtained from transfer functions furnished by the Sundstrand Corporation. The model for the cycloconverter is based on a description in Pelly, pp. 287-290 and data furnished by General Electric and Westinghouse.

In all programs, the differential equations are expressed in state variable formulation. That is, they are written as a set of first order, ordinary, simultaneous differential equations. The equations that define the generator contain time varying coefficients. The state variable equations are solved by a fourth order RUNGE KUTTA algorithm with a fixed integration step size.

The subset of equations that define the generator are expressed in matrix form. This allows the coding of the generator equations to take a simple form that requires a small number of program statements. The data that define the coefficients are contained in a separate block that is isolated from the program statements which define matrix manipulations. This makes it easy to follow the flow of the program.

The equations of the distribution system that include the electrical load are embedded in the matrix equations that define the generator and are expressed in terms of mesh currents. This formulation allows the user to easily increase or decrease the size of the distribution system in a simple way. The distribution network is changed by changing the values or location of elements in the matrices. It is not necessary to rewrite any scalar equation. Examples of this are given in Appendix A - Users guide.

The equations for the voltage regulator were obtained from a transfer function block diagram and are coded in the program as scalar equations. All coefficients in these equations are defined as variables. The numerical values of variables are entered as DATA statements.

The equations for simulating two generators operating in parallel were obtained by taking the model of a single generator and adding a constant speed dirve, the computation of shaft torque, and feedback loops to control the real and reactive power division.

The IDG program simulates a three phase generator, a constant speed drive, and a voltage regulator. The VSCF program simulates a six phase generator and a cycloconverter.

6.1.2 Program Structure

All four of the programs are constructed according to the same basic structure. An outline of the program structure is shown in Table 45.

The specification statements are arranged in the order of DIMENSION, COMMON, and DATA and is the same for the main program and the subroutines. The DIMENSION statements declare the size of the arrays for variables that are unique to the program procedure in which they appear. The size of arrays that appear in two or more program procedures are declared in statements named COMMON. The COMMON statement, with one exception, is also used to pass variables between procedures. The exception is subroutine INVERT. This subroutine was obtained from the Vought System Library and is a standard matrix inversion routine. The variables are passed between this routine and the other program procedures by means of an argument list.

The Input/Output statements are placed in the front of the program. Representative output statements are listed in the sample listings of the programs that are contained in this report. These statements can be modified by the user as required. The representative output statements are intended to be directed to a line printer. Many of the examples presented in this report

TABLE 45

PROGRAM STRUCTURE

```
MAIN PROGRAM
     SPECIFICATION STATEMENTS
          DIMENSION
          COMMON
          DATA
     INPUT/OUTPUT STATEMENTS
     FLOW CONTROL STATEMENTS
          SOLVE STATE VARIABLE EQUATIONS BY MEANS OF RUNGE-KUTTA
          ALGORITHM
               CALL MAT
               CALL INVERT
               CALL DEQ
     FORMAT STATEMENTS
     END

SUBROUTINE MAT
     SPECIFICATION STATEMENTS
          DIMENSION
          COMMON
          DATA
     ASSIGNMENT STATEMENTS
          DEFINITION OF ELEMENTS OF XL AND XLD MATRICES
RETURN
END

SUBROUTINE DEQ
     SPECIFICATION STATEMENTS
          DIMENSION
          COMMON
          DATA
     ASSIGNMENT STATEMENTS
          EXPRESSIONS FOR STATE VARIABLE EQUATIONS
RETURN
END

SUBROUTINE INVERT (XL, XLI, N, N, N)
    INVERT "NxN"  MATRIX BY GAUSSIAN ELIMINATION
RETURN
END
```

were obtained from a digital plot. Since digital plotters are site dependent, this report does not contain program listings or instructions for obtaining digital plots. The FORMAT statements are listed at the end of the main program. This is a standard convention to aid the user in locating FORMAT statements within the program.

Flow control statements direct the sequence of operations for solving the state variable differential equations by means of a fourth order RUNGE-KUTTA algorithm. Subroutines MAT, DEQ, and INVERT are called while the RUNGE-KUTTA algorithm is being processed. Subroutine MAT defines the elements of the inductance matrix and the elements of the derivative of the inductance matrix. This subroutine is used in programs GENR, GENRDIS, and PARGEN. These programs contain a model for a three phase generator. Program VSCF contains the model of a six phase generator. In this program, subroutine MAT defines the elements of the inductance matrix and the element of the derivative of the inductance matrix. Subroutine INVERT computes the inverse of the inductance matrix by Gaussian Elimination and is contained in all four programs. The state variable equations are defined in subroutine DEQ. The equations for the generator and the distribution system are written in the form of matrix equations. The equations for the voltage regulator and the constant speed drive are written as scalar equations.

The subroutines are arranged in the same manner as the main program. The specification statements are listed in the order of DIMENSION, COMMON, and DATA; and are followed by the assignment statements. The assignment of names to variables are common to all four programs. For example, the variable T defines the time in units of seconds in all four programs. A list of the variables that are common to the program is shown in Table 46.

These developed programs are written in FORTRAN V. This version allows the use of Block IF type of flow control statement. This feature eliminates the requirement for "Go To Branching" statements with the result that the programs have a top-down structure.

TABLE 46

DEFINITION OF PARAMETERS USED IN PROGRAMS

T - time, seconds
T1 - time, milliseconds
DT - integration step size, seconds
Y - state variables
YD - derivative of y
XL - inductance matrix, hen.
XLD - derivative of XL
XLI - inverse of XL
R - resistance matrix, ohms
V - voltage, volts
M - number of state variables
N - number of state variables associated with generator and distribution system
L - NxN
K2 - counter (no. of print cycles)
K4 - counter (no. of integration cycles between print cycle)

VOLTAGE REGULATOR PARAMETERS

VREF - reference voltage
VR - voltage out of rectifier
VA,VB,VC - phase voltages
B1,B2,C,B4,C1,C2,C3

GENERATOR PARAMETERS

XLAO, XLA2, XLAB0, XLF, XLDD, XLQ, XMQ, XMFO, XMFD
THETA, shaft angle, rad
THDOT, angular velocity of shaft, rad/sec

PARAMETERS USED IN RUNGE KUTTA ALGORITHM

Y1,R1,R2,R3,R4

6.1.3 Numerical Accuracy

The integration step size, DT, has the primary impact on the accuracy of the solutions obtained from these programs. For a fourth order RUNGE-KUTTA algorithm, the error is 0 (DT^5). The smaller the value of DT, the smaller the error. However, decreasing the value of DT will increase the CPU time required to run the simulation. An investigation was made to determine the largest integration step size that would give results of sufficient accuracy. The approach was to conduct several runs with program GENR with different step sizes and compare results. An initial value for DT was chosen to be .01 of a period for the generator frequency. For a generator operating at 400 Hz this yields a .000025 second step size. It was determined that changing the step size from .000025 to .000025 seconds yields the same results to an accuracy of three significant figures. The step size for most of the runs was set at .000025 seconds as a compromise between accuracy and cost of run. The frequency of the VSCF generator can vary from 1200 to 2500 Hz. For runs where the generator frequency was set to 1200 Hz, this integration step size was set at .00000833 seconds.

The integration step size should be chosen to be smaller than the smallest time constant in the system. A salient pole generator is described by linear differential equations with periodic coefficients. Such a system does not have time constants but an approximate value for a time constant can be obtained from the constant part of the self inductance and the load resistance. For the generator used in this program, this gives a time constant of .000463 seconds which is an order of magnitude larger than the value of the integration step size. This presented a problem when modeling the voltage regulator. It is necessary to measure the voltage at the output terminal of the generator to provide feedback to the voltage regulator. This is ordinarily accomplished by placing a large resistor across the output terminals. A value of resistance as low as ten ohms gives an approximate

value of the shortest time constant of .0000463 seconds. Use of this time constant and integration step size in program GENR caused the solution to diverge. Reducing the integration step size by a factor of ten to .0000025 seconds restored the solution to a stable region. However, this in turn had the undesirable effect of increasing the CPU time by a factor of ten. This problem can be avoided by not modeling the terminal resistor. Instead, the voltage at the generator terminal can be computed from the load impedance and the mesh currents through the load. This approach gives a result that is mathematically correct and avoids the introduction of a spurious time constant.

The equation for the elements of the inductance matrix that is contained in CONCORDIA, pg 11, 12, lead to a singular matrix. The numerical data for the elements of the inductance matrix that was furnished by the vendors is slightly different from the values obtained by the equation. The elements of the inductance matrix obtained from the vendors results in a non-singular matrix. This problem is discussed in more depth in the section on the Generator Math Model.

6.1.4 Solution Run Time

The CPU time is determined primarily by the integration step size and the number of steps that are required for a particular problem solution. The electrical transients are relatively short and their effect can be determined by computing the response for several cycles. The effects of mechanical transients through the constant speed drive can take hundreds of generator cycles to stabilize. Various representative runs were made to obtain a measure of CPU time. Although the results that follow are site dependent, they are representative of what might be expected from a similar installation. A list of the central processor time per iteration for the four programs is shown in Table 47. This time does not include CPU time required for graphics. The largest increment of CPU time is that needed to invert the inductance matrix two times per iteration. Tests were made with program GENRDIS in which the inversion was performed one time per iteration.

TABLE 47

COMPARISON OF RUN TIMES

PROGRAM	CPU TIME SECONDS/ITERATION	CORE MEMORY OCTAL WORDS
GENR	.034	57500
GENRDIS	.185	57500
PARGEN	.073	61500
VSCF	.032	61500

For a sample case, this resulted in a forty percent reduction in run time with a slight degradation in accuracy. Therefore, if run time is excessive, it can be substantially reduced by performing the inversion of the inductance matrix one time per iteration.

6.1.5 Array Indices

All arrays that appear in the programs are indexed in one dimension. They are stored in the computer as vectors. The numbering scheme for an NxN array is shown in Table 48. The left hand column is numbered first and the numbering proceeds from the top down. The index for the first element of the second column is Nx1. The numbering proceeds from the top down with the index of the bottom element of the second column being NxN. For an element in the Ith row and Jth column, the index number would be J+N(I-1).

This numbering scheme is particularly convenient for coding to obtain the product of two matrices. A FORTRAN program to obtain the product of an NxN matrix and an Nx1 matrix is shown in Table 49. All of the matrix multiplications used in these programs contain an NxN matrix and a row or column matrix. Notice that the index for A is the format of the general expression for the index number given above.

The matrix inversion operation is performed in subroutine INVERT. This subroutine was obtained from the Vought System Math Library and contains arrays which are indexed in two dimensions. Although the arrays in the other parts of the program are indexed in one dimension, the two methods of indexing are equivalent. That is, a single dimension index of the form J+N(I-1) and a two dimensional index of the form (I, J) will be stored by the computer in the same memory location.

TABLE 48

NUMBERING THE INDICES OF AN NxN ARRAY

1	N+1	2N+1	(N-1)N+1
2	N+2	2N+2	(N-1)N+2
3	N+3	2N+3	(N-1)N+3
.	.	.	.
.	.	.	.
.	.	.	.
N	N+N	2N+N	(N-1)N+N

TABLE 49

FORTRAN PROGRAM TO MULTIPLY TWO MATRICES

```
C           PERFORM THE OPERATION (C) = (A)*(B)
C           (A) IS NxN MATRIX
C           (B) IS Nx1 MATRIX
C           (C) IS Nx1 MATRIX
            D = 0
            DO   200    J=1,N
            DO   100    I=1,N
100         D = D + A (J+N*(J-1))*B(I)
            C(J) = D
200         CONTINUE
```

6.2 IDG Electrical System

The IDG system program is comprised of a constant speed drive (CSD), a generator, a voltage regulator and an electrical distribution system. A block diagram of the IDG system is shown in Figure 68. The CSD mechanically ties the electrical generator to the engine shaft by means of a torque converter and a differential gear train. The CSD maintains the generator at synchronous speed in the presence of engine speed variations and changes in electrical load. The generator is a three phase salient pole machine. The output voltage is controlled by the shaft speed and the field current. Damper windings are included in the model. The distribution system is modeled as six three phase branches, that is, as six load management centers. The voltage regulator model contains a three phase rectifier, a compensation network and the transfer function of the exciter. The following paragraphs contain a description of the math models of the IDG elements which is coded into program GENR.

6.2.1 Generator

The dynamic equations of a salient pole generator is expressed in matrix form. This approach simplifies the coding by reducing the number of lines of code. The generator equations which define the voltage drops around the loop, are expressed in matrix form as follows:

$$(XL)\ (ID) = -(\ (R) + (XLD)\ )\ (I) + (V)$$

where XL is an NxN matrix containing the inductances

XLD is the derivative of L

R is an NxN matrix containing the resistances

V is an Nxl matrix containing voltage sources

I is an Nxl matrix containing currents

ID is the derivative of I

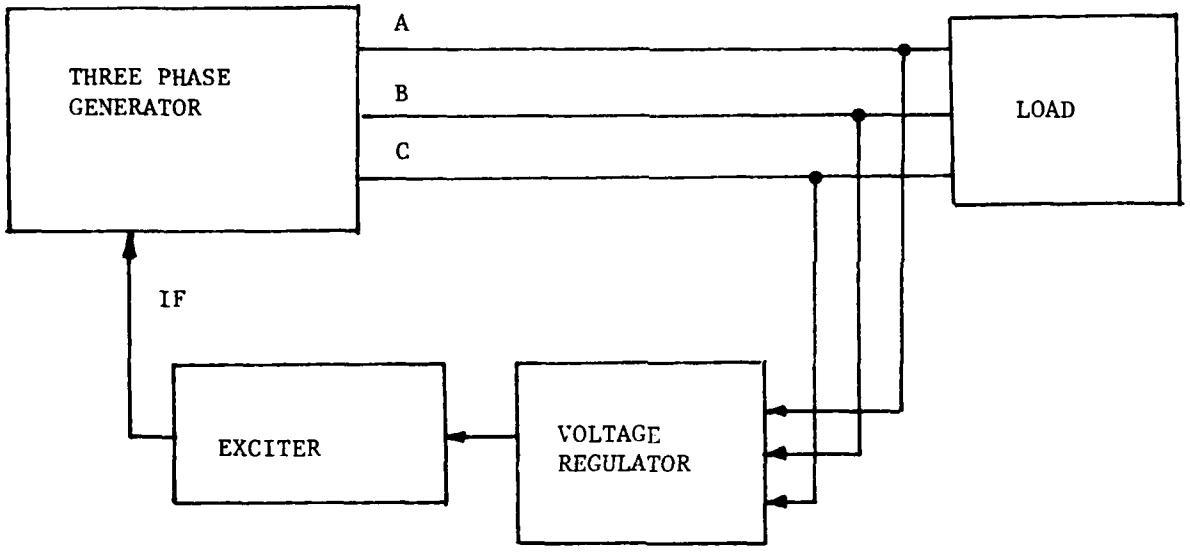

FIGURE 68

BLOCK DIAGRAM IDG SYSTEM

A schematic of a three phase generator is shown in Figure 69. It is desirable to have the field circuit driven by a current source. This is accomplished by placing a shunt resistor across the field coil, as shown in Figure 70. An equivalent circuit, employing a voltage source, is also shown in Figure 70. In the programs, the shunt resistor is combined with the field resistance for a nominal value of 100 ohms. This added resistance has the effect of increasing the dynamic response of the field circuit.

The distribution system is embedded in these equations. To avoid possible confusion, this discussion considers only a single resistive load on each phase. The approach for adding the distribution system to the system model is discussed in a later section.

The formal solutions to these equation is

$$(ID) = (L)^{-1}(((R) + (LD)) (I) + (V))$$

The resulting system is a set of first order linear differential equations with periodic coefficients. Three assumptions are made in defining the coefficients of these equations. The first assumption is that the stator windings are sinusoidally distributed along the air gap as far as all mutual effects with the rotor are concerned. The second assumption is that the stator slots cause no appreciable variation of any of the rotor inductances with rotor angle. The third assumption is that saturation is neglected.

The periodic terms arise from the self and mutual coupling between the coils of the generator. The general form of the equations that define the self and mutual inductances are listed in Table 50. The terms for a three phase generator are listed in Table 51. Nominal values of these terms are listed in Table 52. These are measured values for a 60 KVA generator. Care should be exercised when using the equations listed in Table 51. According to the derivation given in Concordia, the term XLABO has a numerical value that is exactly one-half the value of XLAO. This results in a singular matrix to represent the elements of the inductance matrix. Referring to Table 52, the

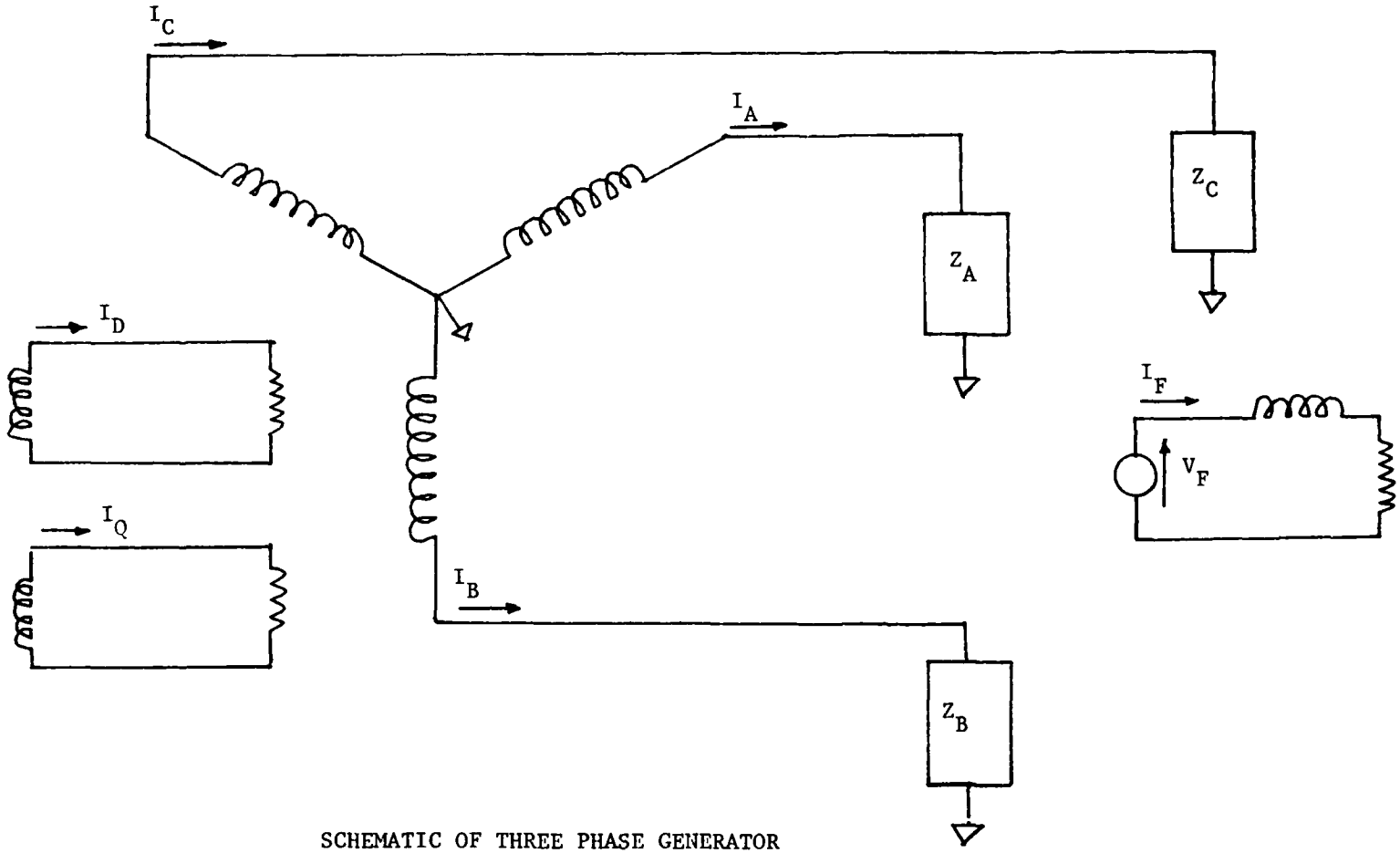

SCHEMATIC OF THREE PHASE GENERATOR

FIGURE 6a

CURRENT SOURCE

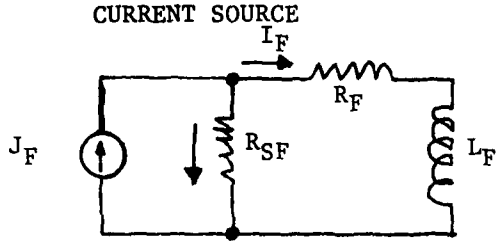

$$J_F = I_F + I_{SF}$$

$$R_{SF}\ I_{SF} = R_F\ I_F + L_F\ \dot{I}_F$$

$$R_{SF}\ J_F = (R_{SF} + R_F) I_F + L_F\ \dot{I}_F$$

EQUIVALENT SOURCE

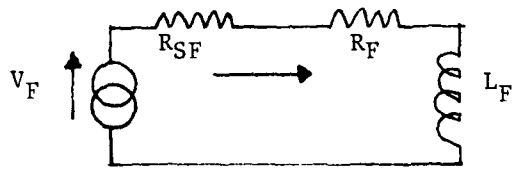

$$V_F = (R_{SF} + R_F) I_F + L_F\ \dot{I}_F$$

FIGURE 70

EQUIVALENT CIRCUIT OF FIELD

TABLE 50

CIRCUIT EQUATIONS FOR SALIENT POLE GENERATOR

$\dot{\psi}_1 = r_1 I_1 + e_1$	Phase A
$\dot{\psi}_2 = r_2 I_2 + e_2$	Phase B
$\dot{\psi}_3 = r_3 I_3 + e_3$	Phase C
$\dot{\psi}_4 = r_4 I_4 + e_4$	Field
$\dot{\psi}_5 = r_5 I_5 + e_5$	Direct Axis
$\dot{\psi}_6 = r_6 I_6 + e_6$	Quad. Axis

$$\psi_1 = XL11I_1 + XL12I_2 + XL13I_3 + XL14I_4 + XL15I_6 + XL16I_6$$

$$\psi_2 = XL21I_1 + XL22I_2 + XL23I_3 + XL24I_4 + XL25I_5 + XL26I_6$$

$$\psi_3 = XL31I_1 + XL32I_2 + XL33I_3 + XL34I_4 + XL35I_5 + XL36I_6$$

$$\psi_4 = XL41I_1 + XL42I_2 + XL43I_3 + XL44I_4 + XL45I_5 + XL46I_6$$

$$\psi_5 = XL51I_1 + XL52I_2 + XL53I_3 + XL54I_4 + XL55I_5 + XL56I_6$$

$$\psi_6 = XL61I_1 + XL62I_2 + XL63I_3 + XL64I_4 + XL65I_5 + XL66I_6$$

ψ - total flux linkage

e - terminal voltage

r - coil resistance

XLNN - self inductance

XLMN - mutual inductance

NOTE: XLMN = XLNM

TABLE 51

DEFINITION OF ELEMENTS OF THE INDUCTANCE MATRIX

Armature self and mutual inductance

$Xnn = XLAO + XLA2 \cos 2 (\theta - \phi(n-1))$

For $n \neq m$

$Xnm = XLABO + XLA2 \cos 2 (\theta + \phi - \frac{\phi}{2} (n+m)$

θ, shaft angle

$\phi = 2\pi/$No. of Phases

Damper and field mutual inductances

$X4n = XAFQ \cos (\theta - \phi(n-1)) \quad n = 1,2,3$

$X5n = XA1D \cos (\theta - \phi (n-1)) \quad n = 1,2,3$

$X6n = -XA1Q \sin (\theta - \phi (n-1)) \quad n = 1,2,3$

All damper and field self inductances are constants.

TABLE 52

PARAMETERS USED TO DEFINE A THREE PHASE SALIENT POLE GENERATOR

PARAMETER	SYMBOL	UNITS	NOMINAL VALUE
ARMATURE RESISTANCE	RA	OHMS	.024
FIELD RESISTANCE	RF	OHMS	100.
DAMPER RESISTANCE	RD	OHMS	.3
LOAD RESISTANCE	RL	OHMS	.75
ARMATURE INDUCTANCE	XLAO	HENRIES	.0003557
	XLA2	HENRIES	.0001752
	XLABO	HENRIES	.0001679
FIELD INDUCTANCE	XLF	HENRIES	.1765
	XMFO	HENRIES	.00761
DAMPER INDUCTANCE	XLDD	HENRIES	.0005
	XLQ	HENRIES	.0005
	XMD	HENRIES	.00025
	XMQ	HENRIES	.00025
	XMFD	HENRIES	.00025

numerical value of XLABO is slightly less than one-half of XLAO. Using the values listed in Table 52, a stable solution is obtained for the program. If the value XLABO is chosen to be exactly one-half of XLAO, the computer solution diverges. The order of the rows is arbitrary. For these programs, the order of the row is determined by the definition of the currents which are defined as follows:

I_1 = Phase A armature current

I_2 = Phase B armature current

I_3 = Phase C armature current

I_4 = Direct axis damper current

I_5 = Quadrature axis damper current

I_6 = Field current

This designation is employed in programs GENR, GENRDIS and PARGEN.

The program is coded to solve these equations by means of a fourth order RUNGE-KUTTA algorithm. The solution is presented as the value of the state variables for each integration step. A caution about sign conventions is in order. These equations are based on the derivation presented in Concordia pp 8-14 and are arranged to have a positive current to correspond to generator action. This is opposite to the convention employed in networks. In developing the programs, the convention employed in networks is used. This convention has the advantage of having the equations of the generator and the distribution system follow a consistent sign convention.

6.2.2 Voltage Regulator

The function of the voltage regulator is to maintain the generator terminal voltage at a constant value under varying load conditions. This is accomplished by providing a feedback circuit that measures the terminal voltage and sends a corrective signal to the field current whenever the load changes. A block diagram of the voltage regulator is shown in Figure 71. The contents of each block are described in the following paragraphs.

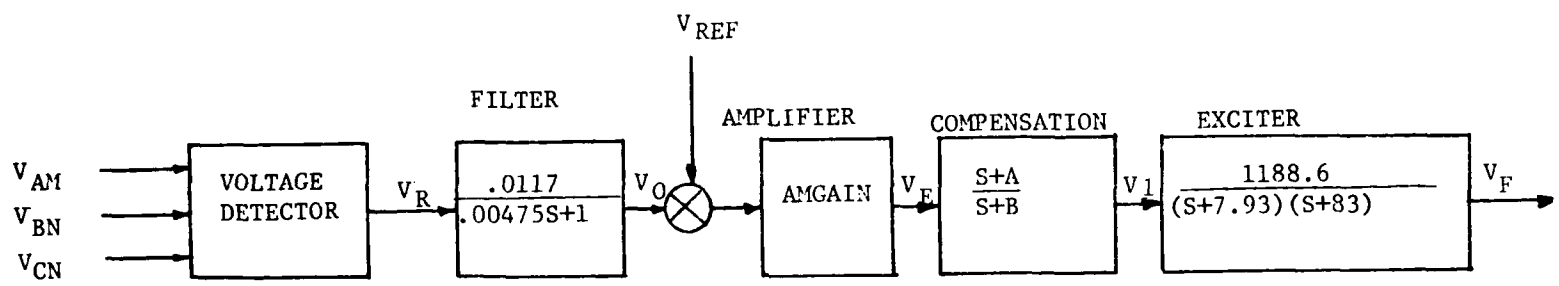

FIGURE 71

VOLTAGE REGULATOR BLOCK DIAGRAM

The voltage detector is comprised of three diodes connected to a common resistor. The function of the voltage detector is to monitor the three line to neutral voltages (V_{an}, V_{bn}, and V_{cn}) and output the voltage that has the highest positive value. The output of the detector, which is identified as V_R, contains an undesirable ripple on the signal.

This ripple is removed by a single pole filter which is shown in the next block. The nominal values of the filter parameters are shown in the block. The program is written to accept the parameters as variables. The output of the filter, which is identified as V_o, is subtracted from a reference signal, V_{ref}, and fed to an amplifier having a nominal gain of four. In the program, it is entered as a data statement with the variable name AMGAIN.

The amplifier output is fed to a compensation network comprised of a lead/lag filter. The purpose of this network is to provide stability to the closed loop regulation. The nominal value of the lead term A is ten and the nominal value of the lag term B is one hundred. The compensation network parameters are entered in the program as data statements. The compensation network output, identified as V_1, is fed to a model of the exciter.

The generator exciter is modeled as a two pole network. The fast response term with a pole at 83 represents the time constant of exciter armature coils. The slow response term with a pole at 7.93 represents the response of the exciter field circuit. These parameters are entered in the program as variable names by means of data statements. The output of the exciter model, I_f, is fed to a resistor R_f. The V_f voltage developed across R_f, provides the voltage to the generator field winding.

The procedure of converting the transfer functions into state variable equations is to replace the Laplace variable, S, with the derivative of the output variable of the transfer functions. When higher derivatives are encountered, new variables are defined so all equations contain first order

derivatives. The number of state variables in a system is equal to the number of energy storage elements that are present. A derivation of state variable equations for the voltage regulator portion, filter and compensation network and exciter of the system is presented as follows:

FILTER:

Transfer Function: $\frac{VO}{VR} = \frac{.0117}{.00475S+1}$

State Variable Equation:

$$.00475\ \dot{VO} = -VO+.0117\ VR$$

$$\dot{VO} = -210.5\ VO+2.46\ VR$$

In the program, this equation is written

```
YD( 7) = -C*Y( 7)+B4*VR
```

The variables C and B4 are entered as data statements.

COMPENSATION:

The compensation network has a pole in the numerator to avoid difficulties in which derivatives appear on the right hand side of the equation; the compensation network is equated to the following electrical circuit:

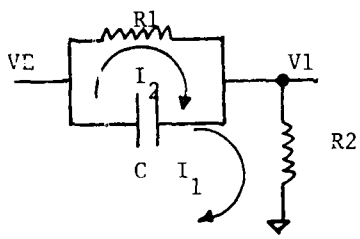

Transfer Function: $\frac{V1}{VE} = \frac{S+A}{S+B}$

The transfer function of this network is

$$\frac{V1}{VE} = \frac{S + \frac{1}{R_1 C}}{S + \frac{1}{C}\left(\frac{1}{R_1} + \frac{1}{R_2}\right)}$$

The loop equations of this network are

$$V_E = V_C + I_1 R_2$$

$$\dot{V}_C = (I_1 - I_2)/C \qquad \text{VC is voltage across C}$$

$$\dot{V}_C = (V_E - V_C)\frac{1}{R_2 C} - \frac{V_C}{R_1 C}$$

$$V_C = \frac{V_E}{R_2 C} - V_C\left[\frac{1}{R_2 C} - \frac{1}{R_1 C}\right]$$

$$V_1 = V_E - V_C$$

AD-A099 894 VOUGHT CORP DALLAS TX F/G 10/2
POWER SYSTEM CONTROL STUDY. PHASE I. INTEGRATED CONTROL TECHNIQ--ETC(U)
MAR 81 D E LAUTNER, A J MAREK, J R PERKINS F33615-78-C-2018
UNCLASSIFIED AFWAL-TR-80-2129 NL

4 of 5
AD
A099894

Comparing the network parameters R_1, R_2 and C with the constants A and B of the transfer function, the state variable equation of the compensation network can be written

$$\dot{VC} = (B-A)\ VE-BVC$$

$$V1 = VE-VC$$

In the program, this equation is entered as

```
YD(8) = B1*AMGAIN*(VREF-Y(7))-B2*Y(8)
```

The variables B1 and B2 are entered as data statements. The variable V1 is introduced into the exciter equations. Notice V1 is not a state variable.

EXCITER:

Transfer Function: $\frac{I_F}{V1} = \frac{1188.6}{S^2+87.95+658.2}$

State variable equation:

$$\dot{I}_F = 87.9\ \dot{I}_F-658.2\ I_F+1188.6\ V1$$

To remove the second derivative, let

$$IFD = \dot{I}_F$$

Then

$$\dot{IFD} = -87.9\ IFD-658.2\ I_F+1188.6\ (AMGAIN(VREF-VO)-VC)$$

$$\dot{I}_F = IFD$$

In the program, these equations are entered as

```
YD(15) = Y(10)

YD(10) = C1*Y(10)-C2*Y(9)+C3*(AMGAIN*(VREF-Y(7))-Y(8))
```

The variables C1, C2, C3 are entered as data statements.

The nominal value of the parameters used in defining the voltage regulator are listed below:

Variable Name	Nominal Value
C	210.5
B4	2.46
AMGAIN	100-500
C1	87.9
C2	658.2
C3	1188.6
B1	10.
B2	100.

The state variables used in program GENR are defined in Table 53.

6.2.3 Constant Speed Drive

The constant speed drive is a hydro-mechanical device coupled between an aircraft engine and an electrical generator. Its function is to maintain the generator shaft at a constant speed. The unit compensates for changes in engine speed and changes in electrical loading. The unit is comprised of a differential gear train, a fixed displacement hydraulic motor and a variable displacement hydraulic pump. The wobble plate angle of the variable displacement pump is in proportion to the difference between generator shaft speed and the referenced command speed. A block diagram of the unit is shown in Figure 72. The disturbances to the system are the electrical load, (EL) and the engine rpm, (ω_E). These disturbances result in three outputs: the generator speed (ω_a), the fixed displacement motor speed (ω_E), and the variable displacement motor speed (ω_f). The generator speed command is subtracted from the frequency command to operate the servo valve. The speed

TABLE 53

DEFINITION OF STATE VARIABLES USED IN PROGRAM GENR

GENERAL STATES

PHASE A ARMATURE CURRENT	Y(1)
PHASE B ARMATURE CURRENT	Y(2)
PHASE C ARMATURE CURRENT	Y(3)
FIELD CURRENT	Y(4)
DIRECT AXIS DAMPER CURRENT	Y(5)
QUAD AXIS DAMPER CURRENT	Y(6)

VOLTAGE REGULATOR STATES

RECTIFIER FILTER OUTPUT	Y(7)
COMPENSATION OUTPUT	Y(8)
EXCITER MODEL OUTPUT	Y(9)
EXCITER MODEL RATES	Y(10)

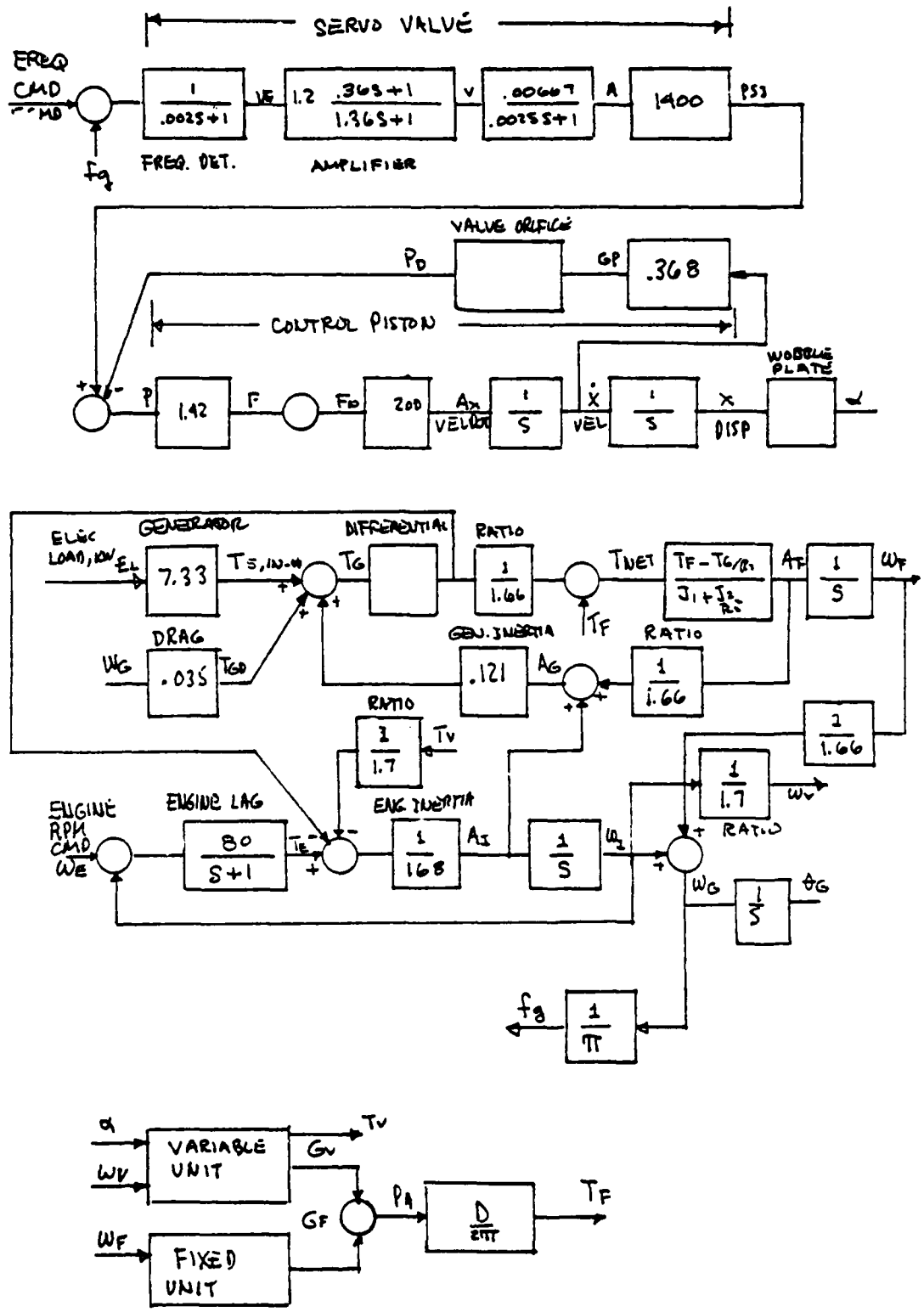

FIGURE 72 BLOCK DIAGRAM - CONSTANT SPEED DRIVE

of the fixed and variable unit, along with the wobble plate angle (ω), determines the output torque of the fixed displacement motor (T_f). The transfer functions that define the CSD have been converted to state variable equations. The conversion procedure is identical to that employed in deriving the state variable equations for the voltage regulator. The Laplace variable (S), is associated with the derivative of a variable. When higher derivatives occur, new variables are introduced so all of the resulting equations are of the first order. The resulting equations are listed in Table 54.

This version of the CSD accurately models the dynamic characteristics. The CSD mode has been simplified yet adequately represents the dominant dynamic characteristics of the system. The reason for using a simplified model is primarily to reduce computer run time. When the detailed CSD model is combined with a generator, voltage regulator, and distribution system, the computer run time can become excessive. The simplified version of the CSD model is used in Program PARGEN, which models parallel operation. A block diagram of the simplified version is shown in Figure 73. The primary contribution to the dynamics is the inertia of the generator identified as J. The hydraulic pump, motor and valve are combined into a single constant R that expresses the change in hydraulic motor torque with a change in speed error.

6.2.4 Electrical Distribution System

The aircraft electrical power distribution system evolved in Section IV is comprised of six parallel load branches per phase, i.e., the six LMC networks. Each branch is modeled as a resistance in series with an inductance. The electrical distribution system is embedded into the inductance and resistance matrices that define the generator parameters. In this manner, it is not necessary to code additional equations to define the distribution system. It is only necessary to provide additional elements to the resistance and inductance matrices because the state variable equations are already coded in matrix form.

TABLE 54

STATE VARIABLE EQUATIONS CONSTANT SPEED DRIVE

$$\dot{T}_E = -T_E + 80*(\omega_E - \omega_I)$$

$$\dot{P}_A = 19519 * \omega_F - 57073*X$$

$$\dot{\omega}_I = .006 * T_E + .00095*\omega_I + .00057*\omega_F + .0162*EL$$

$$\dot{\omega}_F = -173.57 + .693*P_A - .2291*\omega_I - .138\omega_F - 48.16*EL$$

$$\dot{V}_X = -20000*X - .68*(\omega_I - 868.)**1.5 - 11764.*(V**2.) \quad V$$
$$- 5.06*\omega_I - 3.044*\omega_F - 1.4V + 15.9ECMD$$

$$\dot{V} = 11.2XECMD - 3.56*\omega_I - 2.14*\omega_F - 1.3*V$$

$$\theta_G = \omega_I + .6024*\omega_F$$

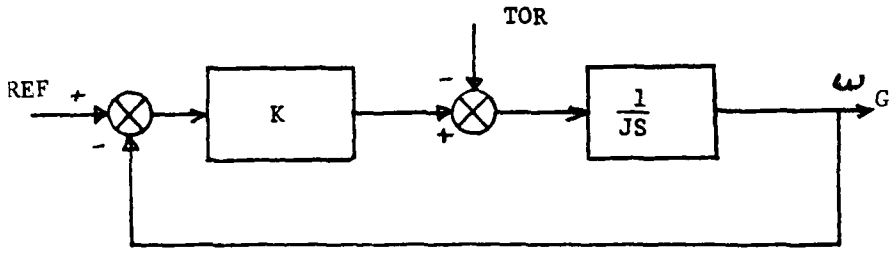

BLOCK DIAGRAM OF SIMPLIFIED VERSION OF CSD

FIGURE 73

The electrical distribution system is coded into Program GENRDIS. This program contains the same definition of a generator and voltage regulator as program GENR.

The additional state variables that are required to define the distribution system require a significant increase in the solution run time. In the GENRDIS program, the six LMCs are simplified to a three branch circuit is modeled in an effort to reduce the run time. This simplification will still allow the user to investigate many cases of interest without incurring excessive costs. For example, the current in one branch resulting from a fault in another branch can be readily modeled. Referring to Table 47, it is seen that even with this simplification, the run time for program GENRDIS is five times the run time for program GENR. The result is primarily due to the increase in the order of the inductance matrix. In the solution, this matrix is inverted every integration step. The number of operations to invert a matrix is proportional to the cube of the order, so the run time may be expected to increase rapidly with an increase in the order of the inductance matrix.

The voltage feedback is customarily achieved by placing a large resistor across the point of regulation. This large resistor will combine with the inductance to form an extraneous pole with a very small time constant. This leads to a numerical instability in the solution unless a very small value is used for the integration step size. An excessively small integration step size in turn leads to excessive solution time. The problem can be circumvented by computing the voltage at the point of regulation. This approach is used in program GENRDIS.

A schematic of the distribution system that is modeled in program GENRDIS is illustrated in Figure 74. The distribution system is defined in terms of mesh equations which are written under each network. The terms e_1, e_2, and e_3 that appear in these equations correspond to the same terms that appear in the generator circuit equations shown in Table 50 and are

PHASE A

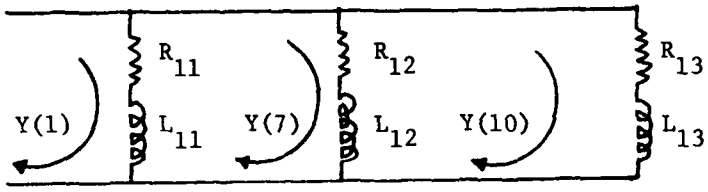

$$e_1 = R_{11}\ Y(1) + L_{11}\ YD(1) - R_{11}\ Y(7) - L_{11}\ YD(7)$$

$$0 = -\ R_{11}\ Y(1) - L_{11}\ YD(1) + (R_{11}+R_{12})\ Y(7) + (L_{11}+L_{12})\ YD(7) - R_{12}\ Y(10) - L_{12}\ Y(10)$$

$$0 = -\ R_{12}\ Y(7) - L_{12}\ YD(7) + (R_{12}+R_{13})\ Y(10) + (L_{12}+L_{13})\ YD(10)$$

PHASE B

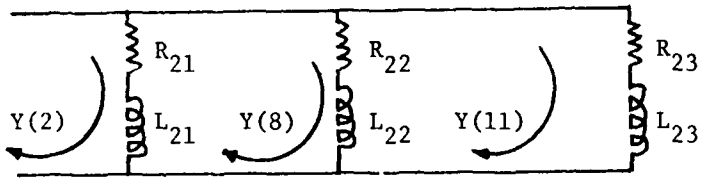

$$e_2 = R_{21}\ Y(2) + L_{21}\ YD(2) - R_{21}\ Y(8) - L_{21}\ YD(8)$$

$$0 = -\ R_{21}\ Y(2) - L_{21}\ YD(2) + (R_{21}+R_{22})\ Y(8) + (L_{21}+L_{22})\ YD(8) - R_{22}\ Y(11) - L_{22}\ YD(11)$$

$$0 = -\ R_{22}\ Y(8) - L_{22}\ Y(8) + (R_{22}+R_{23})\ Y(11) + (L_{22}+L_{23})\ YD(11)$$

PHASE C

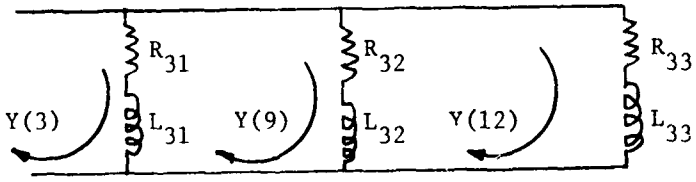

$$e_3 = R_{31}\ Y(3) + L_{31}\ YD(3) - R_{31}\ Y(9) - L_{31}\ YD(9)$$

$$0 = -R_{31}\ Y(3) - L_{31}\ YD(3) + (R_{31}+R_{32})\ Y(9) + (L_{31}+L_{32})\ YD(9) - R_{32}\ Y(12) - L_{32}\ YD(12)$$

$$0 = -R_{32}\ Y(9) - L_{32}\ YD(9) + (R_{32}+R_{33})\ Y(12) + (L_{32}+L_{33})\ YD(12)$$

FIGURE 74

SCHEMATIC - POWER DISTRIBUTION SYSTEM MODEL

embedded in the inductance and resistance matrices. The general arrangement of the elements of these matrices is shown in Table 55. The first three rows contain elements in the circuit equations that define the armature circuits. The fourth row contains elements that define the field current. The fourth and fifth rows contain elements in the equations that define the damper circuits. The last six rows contain elements in the equations that define the distribution system. Each array element corresponds to terms in the circuit equation. For example, the element labled N+8 lies in the eighth row of the matrix. Now refer to the second equation of the Phase B circuits in Figure 73. The coefficients of Y(8) and YD(8) are $-R_{21}$ and $-XL_{21}$ respectively. Therefore, the value of R(N+8) is $-R_{21}$ and the value of XL(N+8) is $-XL_{21}$. A complete listing of the relation between elements of the inductance and resistance matrices is given in Table 56. The definition of the state variables for this program are listed in Table 57 and closely follow the definitions used in Program GENR. The additional state variables (Y(7) through Y(12), represent the currents in the distribution system. The state variables that define the voltage regulator are the last four variables in the group.

6.2.5 Parallel Operation

A parallel system consisting of two IDG generators is coded into program PARGEN. Each IDG generator has the same components as program GENR. The additional elements are the feedback loops that maintain a load balance between the two generators. This difference in real power is fed back to the CSD to balance the mechanical torque changes due to real power changes in the electrical load. The difference in reactive power is fed back to the voltage regulator to adjust the field current. A block diagram of the parallel generator system is shown in Figure 75. The following paragraphs describe the math models used to define this parallel operation system.

TABLE 55

ARRANGEMENT OF L AND R MATRICES

PHASE A	1	N+1	2N+1	3N+1	4N+1	5N+1	6N+1	0	0	0	0	0	Y(1)
PHASE B	2	N+2	2N+2	3N+2	4N+2	5N+2	0	7N+2	0	0	0	0	Y(2)
PHASE C	3	N+3	2N+3	3N+3	4N+3	5N+3	0	0	8N+3	0	0	0	Y(3)
FIELD	4	N+4	2N+4	3N+4	4N+4	5N+4	0	0	0	0	0	0	Y(4)
DAMPER	5	N+5	2N+5	3N+5	4N+5	5N+5	0	0	0	0	0	0	Y(5)
DAMPER	6	N+6	2N+6	3N+6	4N+6	5N+6	0	0	0	0	0	0	Y(6)
	7	0	0	0	0	0	6N+7	0	0	9N+7	0	0	Y(7)
	0	N+8	0	0	0	0	0	7N+8	0	0	10N+8	0	Y(8)
	0	0	2N+9	0	0	0	0	0	8N+9	0	0	11N+9	Y(9)
	0	0	0	0	0	0	6N+10	0	0	9N+10	0	0	Y(10)
	0	0	0	0	0	0	0	7N+11	0	0	10N+11	0	Y(11)
	0	0	0	0	0	0	0	0	8N+12	0	0	11N+12	Y(12)

TABLE 56

RELATION BETWEEN R AND L MATRICES AND CIRCUIT IMPEDANCES

$R(1) = R_{11} + R_a$

$R(6*N+1) = -R_{11}$

$R(7) = -R_{11}$

$R(6*N+7) = R_{11}+R_{12}$

$R(9*N+7) = -R_{12}$

$R(N+8) = -R_{21}$

$R(7N+8) = R_{21}+R_{22}$

$R(10N+8) = R_{22}$

$R(2N+9) = -R_{31}$

$R(8N+9) = R_{31}+R_{32}$

$R(11N+9) = -R_{32}$

$R(6N+10) = -R_{12}$

$R(9N+10) = R_{12}+R_{13}$

$R(7N+11) = -R_{22}$

$R(10N+11) = R_{22}+R_{23}$

$R(8N+12) = -R_{32}$

$R(11N+12) = R_{32} + R_{33}$

$R(N+2) = R_{21} + R_b$

$R(2N+3) = R_{31} + R_c$

$R(7N+2) = -R_{21}$

$R(8N+3) = -R_{31}$

$XL(6N+1) = -XL_{11}$

$XL(7N+2) = -XL_{21}$

$XL(8N+3) = -XL_{31}$

$XL(7) = -XL_{11}$

$XL(9N+7) = -XL_{12}$

$XL(6N+7) = L_{11}+L_{12}$

$XL(N+8) = -XL_{21}$

$XL(7N+8) = XL_{21}+XL_{22}$

$XL(10N+8) = -XL_{22}$

$XL(2N+9) = -XL_{31}$

$XL(8N+9) = XL_{31}+XL_{32}$

$XL(11N+9) = -XL_{32}$

$XL(6N+10) = -XL_{12}$

$XL(9N+10) = XL_{12}+XL_{13}$

$XL(7N+11) = -XL_{22}$

$XL(20N+11) = XL_{22}+XL_{23}$

$XL(8N+12) = -XL_{32}$

$XL(11N+12) = XL_{32}+XL_{33}$

TABLE 57

DEFINITION OF STATE VARIABLES USED IN PROGRAM GENRDIS

PHASE A ARMATURE CURRENT	Y(1)
PHASE B ARMATURE CURRENT	Y(2)
PHASE C ARMATURE CURRENT	Y(3)
FIELD CURRENT	Y(4)
DIRECT AXIS DAMPER CURRENT	Y(5)
QUAD AXIS DAMPER CURRENT	Y(6)
FIRST BRANCH CURRENT IN PHASE A LOAD	Y(7)
FIRST BRANCH CURRENT IN PHASE B LOAD	Y(8)
FIRST BRANCH CURRENT IN PHASE C LOAD	Y(9)
SECOND BRANCH CURRENT IN PHASE A LOAD	Y(10)
SECOND BRANCH CURRENT IN PHASE B LOAD	Y(11)
SECOND BRANCH CURRENT IN PHASE C LOAD	Y(12)
VOLTAGE REGULATOR - RECTIFIER FILTER OUTPUT	Y(13)
VOLTAGE REGULATOR - COMPENSATION OUTPUT	Y(14)
VOLTAGE REGULATOR - EXCITER MODEL RATE	Y(15)
VOLTAGE REGULATOR - EXCITER MODEL OUTPUT	Y(16)

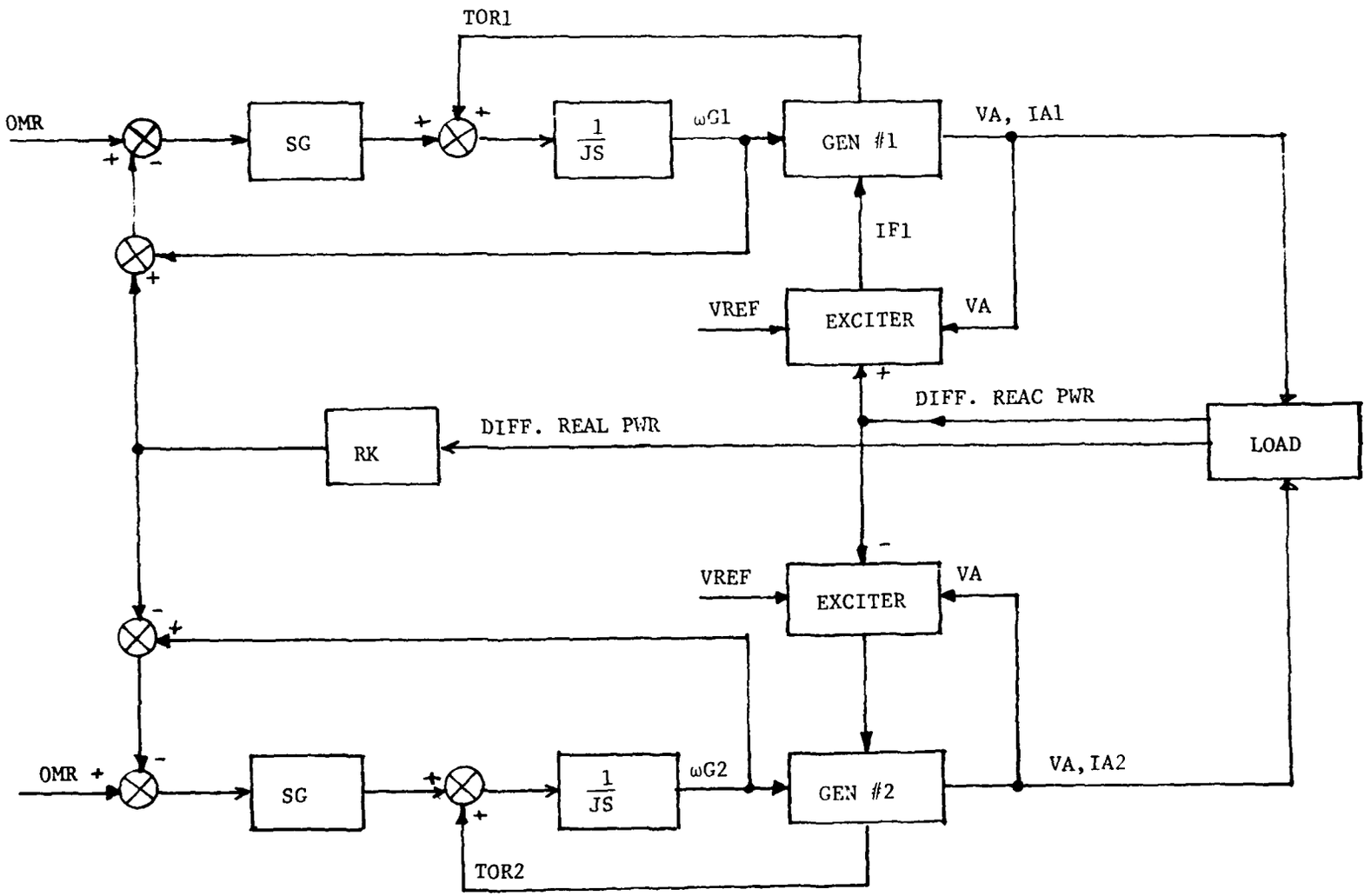

BLOCK DIAGRAM OF IDG SYSTEM PARALLEL OPERATION

FIGURE 75

The generator is a three phase, salient pole, synchronous generator as previously described except, for simplicity, the damper windings have been omitted. In this program, the computation of the shaft torque due to electrical power is required. The formula for shaft torque is equal to the rate of change of energy with respect to shaft angle:

$$T = \frac{\partial \omega}{\partial \theta} (I_A, I_B, I_C, I_F, \theta)$$

$$T = \frac{\partial}{\partial \theta} \left[\int_0^{I_A} \lambda_A \, dI_A + \cdots \int_0^{I_F} \lambda_F \, dI_F \right]$$

where

T = torque, newton-meters

θ = shaft angle, rad

λ_A = XL11 I_A + XL12 I_B + XL13 I_C + XL14 I_F, etc.

The matrix equation for shaft torque is written in Table 58.

The voltage regulator has the same block diagram as the regulator modeled in Program GENR. An additional input is provided to receive a signal proportional to the differential reactive power.

The differential power of each generator is measured according to the relationship

PREAL = VA (IA1-IA2), Real Power

PREAC = VA (IA1-IA2) OMR, Reactive Power

The output of the real power detector is fed to a single pole filter with transfer function.

$$\frac{O}{I} = \frac{1}{\tau s + 1}$$

The filter transfer function is represented by the block labeled RK in Figure 75. The output of the reactive power detector is fed to a similar single pole filter.

TABLE 58

MATRIX EQUATION DEFINING SHAFT TORQUE

$$T = \begin{bmatrix} I_A & I_B & I_C & I_F \end{bmatrix} \begin{bmatrix} X_{aa} & 0 & 0 & 0 \\ X_{ba} & X_{bb} & X_{cb} & 0 \\ X_{ca} & X_{cb} & X_{cc} & 0 \\ X_{FA} & X_{fb} & X_{fc} & 0 \end{bmatrix} \begin{bmatrix} I_A \\ I_B \\ I_C \\ I_F \end{bmatrix}$$

X_{aa} = - XLA2 SIN 2θ

X_{bb} = - XLA2 SIN (2(θ-2.0943))

X_{cc} = - XLA2 SIN (2(θ+2.0943))

X_{ba} = 2XLA2 SIN (2(θ+.5235))

X_{fa} = - XMFO SIN θ

X_{fb} = - XMFO SIN (θ-2.0943)

X_{fc} = - XMFO SIN (θ+2.0943)

X_{cb} = 2XLA2 SIN (2(θ-1.5706))

The Constant Speed Drive has been simplified for this program. The response of the CSD is dominated by the inertia of the generator. A block diagram of the simplified CSD is shown in Figure 76. The equations that define the response are given in Table 59. The error is the difference between the reference frequency (OMR), the sum of the shaft speed (G), and the real power signal (PREALO). This error signal is amplified by SG to produce a torque to drive the generator. This torque is opposed by the generator electrical torque (TOR), and the inertia of the generator shaft.

The load for program PARGEN is modeled as a single resistance and inductance.

The coding of Program PARGEN is patterned after Program GENR with additional requirements satisfied by introducing additional control functions and variables to compute the dynamic response of two generators.

The equations for the generators and the load are written in terms of matrices. There are additional coupling terms present in the case of parallel operation due to currents from two sources flowing through the load. The arrangement of the L and R matrices are shown in Table 60. The relation between the elements of these matrices and circuit impedances are defined in Table 61. The generator inductances are the same as those defined in program GENR.

6.3 VSCF Program Development

The requirements for a program to determine the transient response of a VSCF system are generally the same as those for the IDG system. The model has sufficient detail to determine the transient response of the wave shapes resulting from nominal load changes, unbalanced faults, and other out-of-tolerance conditions. A feature of this model, that has not been provided before, is a representation of the interaction between the generator and the load through the cyclo-converter.

TABLE 59

DEFINITION OF STATE VARIABLES USED IN PROGRAM PARGEN

IA1	PHASE A ARMATURE CURRENT; GEN. #1	Y(1)
IB1	PHASE B ARMATURE CURRENT; GEN. #1	Y(2)
IC1	PHASE C ARMATURE CURRENT; GEN. #1	Y(3)
IF1	FIELD CURRENT; GEN. #1	Y(4)
IA2	PHASE A ARMATURE CURRENT; GEN. #2	Y(5)
IB2	PHASE B ARMATURE CURRENT; GEN. #2	Y(6)
IC2	PHASE C ARMATURE CURRENT; GEN. #2	Y(7)
IF2	FIELD CURRENT; GEN. #2	Y(8)
VO1	VOLTAGE REGULATOR; GEN. #1	Y(9)
VC1	COMPENSATION OUTPUT; GEN. #1	Y(10)
IF1C	EXCITER MODEL OUTPUT; GEN. #1	Y(11)
IFF1C	EXCITER MODEL RATE; GEN. #1	Y(12)
VO2	VOLTAGE REGULATOR; GEN. #2	Y(13)
VC2	COMPENSATION OUTPUT; GEN. #2	Y(14)
IF2C	EXCITER MODEL OUTPUT; GEN #2	Y(15)
IFF2C	EXCITER MODEL RATE; GEN. #2	Y(16)
ωG1	ANGULAR VELOCITY OF GEN. #1 SHAFT	Y(17)
THETA1	ANGULAR POSITION OF GEN. #1 SHAFT	Y(18)
ωG2	ANGULAR VELOCITY OF GEN. #2 SHAFT	Y(19)
THETA2	ANGULAR POSITION OF GEN. #1 SHAFT	Y(20)
PREALO	REAL POWER FILTER	Y(21)
PREACO	REACTIVE POWER FILTER	Y(22)

TABLE 60

PARALLEL OPERATION ARRANGEMENT OF THE L AND R MATRICES

GENR #1	PHASE A	1	N+1	2N+1	3N+1	4N+1	0	0	0	Y(1)
	PHASE B	2	N+2	2N+2	3N+2	0	5N+2	0	0	Y(2)
	PHASE C	3	N+3	2N+3	3N+3	0	0	6N+3	0	Y(3)
	FIELD	4	N+4	2N+4	3N+4	0	0	0	0	Y(4)
GENR #2	PHASE A	5	0	0	0	4N+5	5N+5	6N+5	7N+5	Y(5)
	PHASE B	0	N+6	0	0	4N+6	5N+6	6N+6	7N+6	Y(6)
	PHASE C	0	0	2N+7	0	4N+7	5N+7	6N+7	7N+7	Y(7)
	FIELD	0	0	0	0	4N+8	5N+8	6N+8	7N+8	

TABLE 61

RELATION BETWEEN L AND R MATRICES AND
CIRCUIT IMPEDANCES

R(1) = RA+RI

R(N+2) = RB+RI

R(2N+3) = RC+RI

R(3N+1) = R(7N+8) = RF

R(5) = R(4N+1) = RA

R(N+6) = R(5N+2) = RB

R(2N+7) = R(6N+3) = RC

XL(5) = XL(4N+1) = XL11

XL(N+6) = XL(5N+2) = XL12

XL(2N+7) = XL(6N+3) = XL13

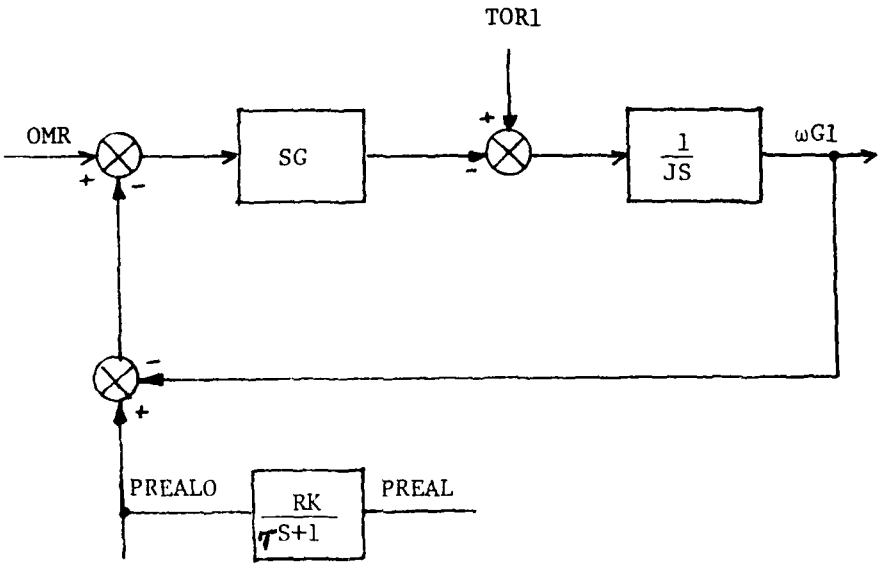

FOR GENERATOR #1

$\dot{\omega}G1 = 1/J\ (-TOR1 + SG^{*}\ (OMR1 - G1))$

$OMR1 = OMR + PREALO$

FOR GENERATOR #2

$\dot{\omega}G2 = 1/J\ (-TOR2 + SG^{*}\ (OMR2 - G2))$

$OMR2 = OMR + PREALO$

REAL POWER FILTER

$\dot{PREALO} = 1/T\ (-PREALO + RK^{*}PREAL)$

NOMINAL VALUES OF PARAMETERS

$1/J = 3.57$ $SG = 14$ $RK = .00942$

SIMPLIFIED IDG USED IN PROGRAM PARGEN

FIGURE 76

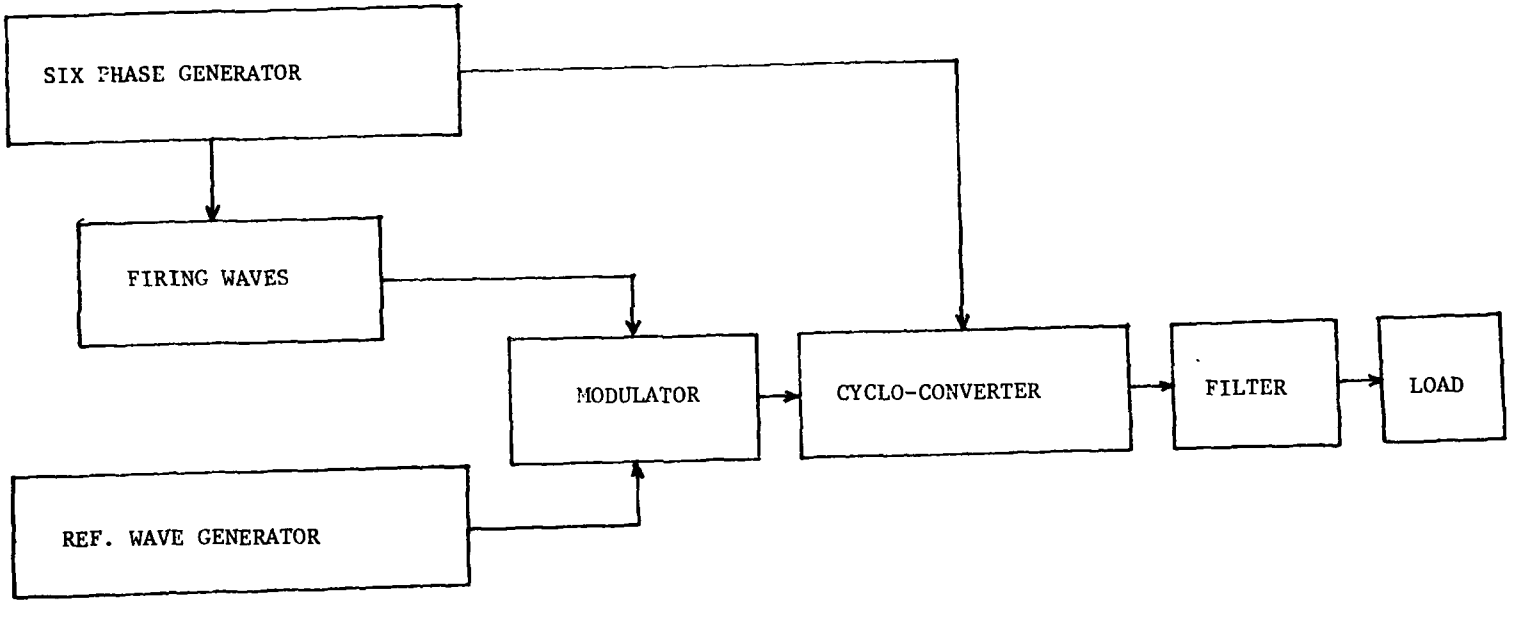

FIGURE 77 BLOCK DIAGRAM - VSCF SYSTEM

A block diagram of a VSCF system is shown in Figure 77. The unit is comprised of a six phase synchronous generator, a reference wave generator, a modulator/cyclo-converter and a filter/load. Feedback control loops are often employed and can be readily added to this model as required.

The characteristics of the elements of this model are described in the following paragraphs.

6.3.1 Technical Approach

The program to compute the transient response of a VSCF system requires several features that have no parallel in the program for the IDG system. The IDG represents a continuous system whereas the VSCF is a system that is changing state in a periodic manner. Each state represents a particular configuration of SCR firing states. The VSCF model that is used for this program contains thirty-six SCR's to switch a six phase generator into a three phase load. In general, this allows for 2^{36} different circuit configurations for which accountability must be provided. Two simplifying assumptions have been made that allow the systems to be represented by six states. Those assumptions and their consequences are:

1) The SCR's are ideal switches. This allows the schematic shown in Figure 78 to be reduced to the schematic shown in Figure 79. In an actual cyclo-converter, the firing logic for the negative bank of SCR's is slightly different from the firing logic for the positive bank. However, the harmonic content of the negative firing bank is the same as the harmonic content of the positive bank. This simplification reduces the number of system states by a factor of two.

2) The output phases are computed in sequence instead of concurrently. That is, when a problem is being run, only a signal output phase is being computed. When all three output phases are required, the problem is run three times and the results are added. This approach is limited to problems in which the internal impedance of the generator is small compared to the load.

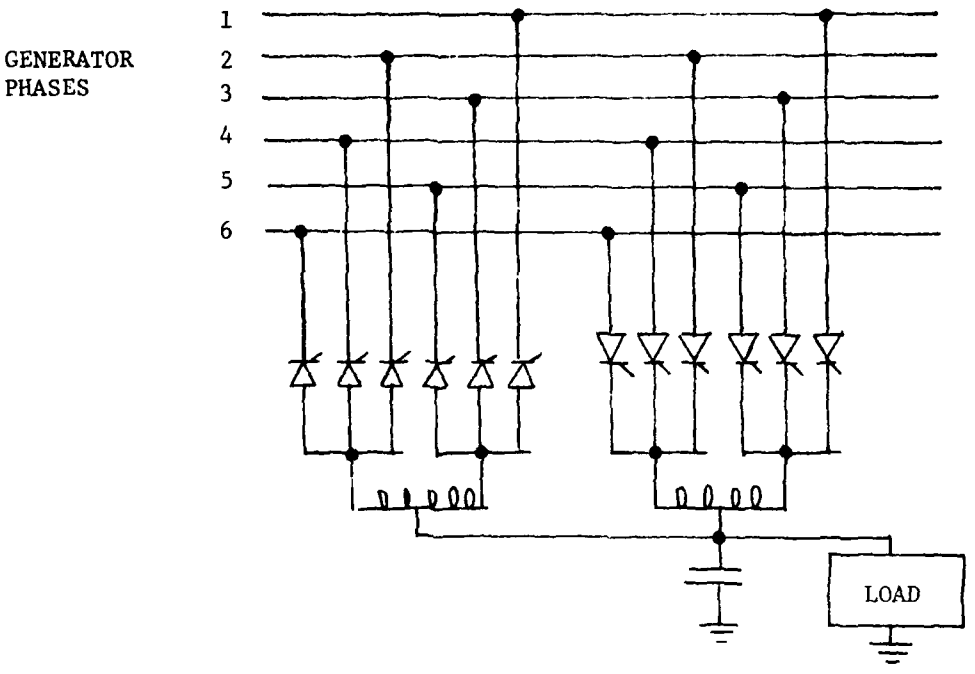

FIGURE 78 SCHEMATIC OF CYCLO-CONVERTER

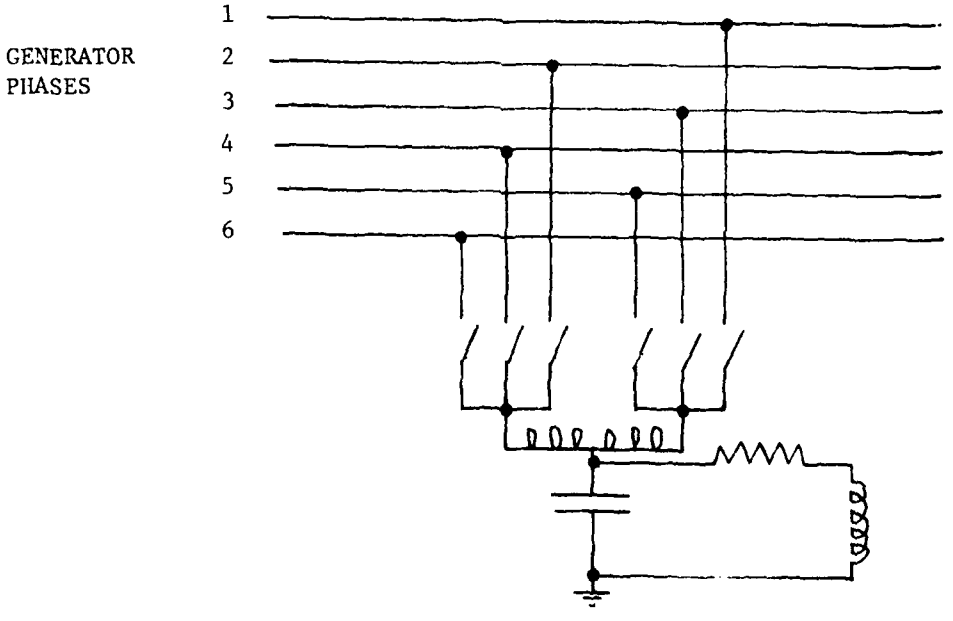

FIGURE 79 MODEL OF CYCLO-CONVERTER USED IN *VSCF PROGRAM*

In practice, this places a lower limit of 0.5 p.u. on the load. This simplyfing assumption, along with the firing sequence that is employed, reduces the total number of system states to six. This is a much more tractable number of states to accommodate. In fact, the solution run time using program VSCF is approximately the same as a similar problem run on the program GENR.

6.3.2 Generator

The VSCF employs a salient pole synchronous generator to provide the electrical power. The number of phases can be either six or nine depending on the generator power rating. For this program, the equations define a six phase generator, although the program can be easily modified to define a nine phase generator. The generator shaft is connected directly to the engine so the frequency of the output can be expected to vary from 1200 Hz to 2500 Hz.

The equations of the generator have been obtained from "Synchronous Machines" by Concordia. In the original derivation, the equations are written for a three phase machine. The appropriate modification to a six phase machine have been made and the result is listed in Table 62. Also, the sign convention has been changed to conform to that employed in circuit equations. The values for the self and mutual inductances are computed from the derivations shown in Table 63. In this representation, damper windings have not been included, although they can be easily added if desired.

It is desirable to express these equations in matrix form. This is done, as shown in Table 64. These are the equations that are coded into the program to define the generator portion of the VSCF. The equations are modified according to a particular load by inserting additional terms into the R and X matrices.

The values of the constants that appear in the equations that define the self and mutual inductances are listed in Table 65.

TABLE 62

CIRCUIT EQUATIONS FOR SIX PHASE GENERATOR

$\dot{\psi}_1 = -r_{1a}I_1 + e_1$ Voltage relations in armature

$\psi_6 = r_{6a}I_6 + e_6$

$\psi_f = r_f I_f + e_f$ Voltage relation in field

ψ_n = total flux linkage in phase n

r_{na} = resistance of armature winding in phase n

e_n = terminal voltage of phase n

The form of ψ_n is

$$\psi_n = X_{n1}I_1 + X_{n2}I_2 + X_{n3}I_3 + X_{n4}I_4 + X_{n5}I_5 + X_{n6}I_6 - X_{nf}I_f$$

The X's are inductances defined by

$$X_{nn} = X_{aao} + X_{aa2} \cos 2\,\theta_n$$

$\theta n = \theta - 60(n-1)$ θ_1 shaft angle, rad

$\theta m = \theta - 60(m-1)$

$$X_{nm} = X_{aao} \cos 60(m-n) + X_{aa2} \cos 2\left(+60-30(n+m)\right) = Xmn$$

$$\psi f = X_{1f}I_1 - X_{2f}I_2 - X_{3f}I_3 - X_{4f}I_4 - X_{5f}I_5 - X_{6f}I_f + X_{ff}I_f$$

$$X_{nf} = X_f \cos \theta n$$

TABLE 63

EQUATIONS FOR SELF AND MUTUAL INDUCTANCES

Armature self and mutual inductances

$$X_{nm} = P_d \cos \theta_n \text{ LOS } \theta_m + P_q \sin \theta_n \sin \theta_n$$

$$= \frac{P_d}{2}\left[\cos(\theta_n+\theta_n) + \cos(\theta_n=\theta_n)\right] + \frac{P_g}{2}\left[\cos(\theta_n-\theta_n) - \cos(\theta_n+\theta_n)\right]$$

$$= \frac{P_d+P_q}{2} \cos(\theta_n-\theta_m) + \frac{P_d-P_q}{2} \cos(\theta n+\theta m)$$

$$\theta_n+\theta_m = \theta-60(n-1) + \theta- 60(m-1) = 2\theta - 60(n+m) +120$$

$$\theta_n-\theta_m = \theta-60(n-1) -\theta + 60(m-1) = 60(m-n)$$

For n = m

$$X_{mn} = \frac{P_d+P_q}{2} + \frac{P_d-P_q}{2} \cos 2\left[\theta - 60(n-1)\right]$$

For $n \neq m$

$$X_{mn} = \frac{P_d+P_q}{2} \cos 60(m-n) + \frac{P_d-P_q}{2}\left[\cos 2\theta+60 - 30(n+m)\right]$$

Let $X_{aao} = \frac{P_d+P_q}{2}$

$X_{aa2} = \frac{P_d-P_q}{2}$

TABLE 64

MATRIX FORMULATION FOR CIRCUIT EQUATIONS

Let $\dot{\psi} = \begin{bmatrix} \psi_1 \\ \psi_2 \\ \psi_3 \\ \psi_4 \\ \psi_5 \\ \psi_6 \\ \psi_f \end{bmatrix} = [X][\dot{I}] + [\dot{X}][I] = -[R] + [e]$

where $[X] = \begin{bmatrix} X_{11} & X_{12} & X_{13} & X_{14} & X_{15} & X_{16} & X_{1f} \\ X_{21} & X_{22} & X_{23} & X_{24} & X_{25} & X_{26} & X_{2f} \\ X_{31} & X_{32} & X_{33} & X_{34} & X_{35} & X_{36} & X_{3f} \\ X_{41} & X_{42} & X_{43} & X_{44} & X_{45} & X_{46} & X_{4f} \\ X_{51} & X_{52} & X_{53} & X_{54} & X_{55} & X_{56} & X_{5f} \\ X_{61} & X_{62} & X_{63} & X_{64} & X_{65} & X_{66} & X_{6f} \\ X_{f1} & X_{f2} & X_{f3} & X_{f4} & X_{f5} & X_{f6} & X_{ff} \end{bmatrix}$, a symmetric matrix

$[\dot{I}] = \begin{bmatrix} \dot{I}_1 \\ \dot{I}_2 \\ \dot{I}_3 \\ \dot{I}_4 \\ \dot{I}_5 \\ \dot{I}_6 \\ \dot{I}_f \end{bmatrix}$, $[I] = \begin{bmatrix} I_1 \\ I_2 \\ I_3 \\ I_4 \\ I_5 \\ I_6 \\ I_f \end{bmatrix}$, $[e] = \begin{bmatrix} e_1 \\ e_2 \\ e_3 \\ e_4 \\ e_5 \\ e_6 \\ e_f \end{bmatrix}$

$[R]$ is a diagonal matrix

TABLE 65

SELF AND MUTUAL INDUCTANCES OF SIX PHASE GENERATOR

Parameter	Value	Units
XXAO	.000123	Henries
XXAD	.0000256	Henries
XFLD	.0001	Henries
XXABO	.000058	Henries
Ra	.058	Ohms

To solve this matrix equation, it is necessary to invert the matrix X. Since this matrix is changing with the position of the generator shaft, or time, this inversion is carried out twice for each integration step. The interaction of the firing logic and this system equation result in a complicated interaction that makes it difficult to call the inversion subroutine during an integration cycle. Accordingly, the inversion subroutine is called only at the beginning of an integration step, resulting in a considerable simplification of the coding. This will not significantly effect the accuracy. Sample runs with and without this simplification have been made. The degradation in accuracy is small.

6.3.3 Cyclo-Converter

The cyclo-converter is comprised of a bank of SCR's, firing logic and an interphase reactor. The firing logic switches the SCR's in such a manner that portions of the waves from the six phase generator are combined in the interphase reactor to produce the desired output wave. In general, a cyclo-converter functions as a power amplifier with no phase shift. An arbitrary, low power, reference wave can be reproduced as a high power wave with the same fundamental frequency component as the reference. For a VSCF application, the generator wave frequency can be expected to vary between 1200 and 2500 Hz. The desired output waves are three phase, 400 Hz.

There are many modulating schemes that may be employed to produce the desired output wave. Manufacturers of VSCF systems, e.g., General Electric and Westinghouse consider their techniques to be proprietary and the details of their schemes are presently not available. As an alternative approach to defining a cyclo-converter modulation scheme, the derivation discussed in "Static Power Frequency Changers" by Polly and Gyugyi is used. This approach does not match any known existing hardware implementation. Instead it represents a generic version of a cyclo-converter that follows the mathematical requirements more closely than the actual hardware implementations. The cyclo-converter model that is presented herein can be readily implemented by employing a microprocessor. The key issue of this approach is the requirement to take the ARC SIN of a function. The modulation scheme that is described in the following paragraphs is based on the presentation in "Static Power Frequency Changer", reference pp 38-43.

The switching cycle is presented in Figure 80. The numbering of the switches is associated with the phase number of the generator. Notice that, at any instant of time, two switches are always "on". For example, at time $t=t_1$, indicated by the vertical dashed line in the figure, switches one and

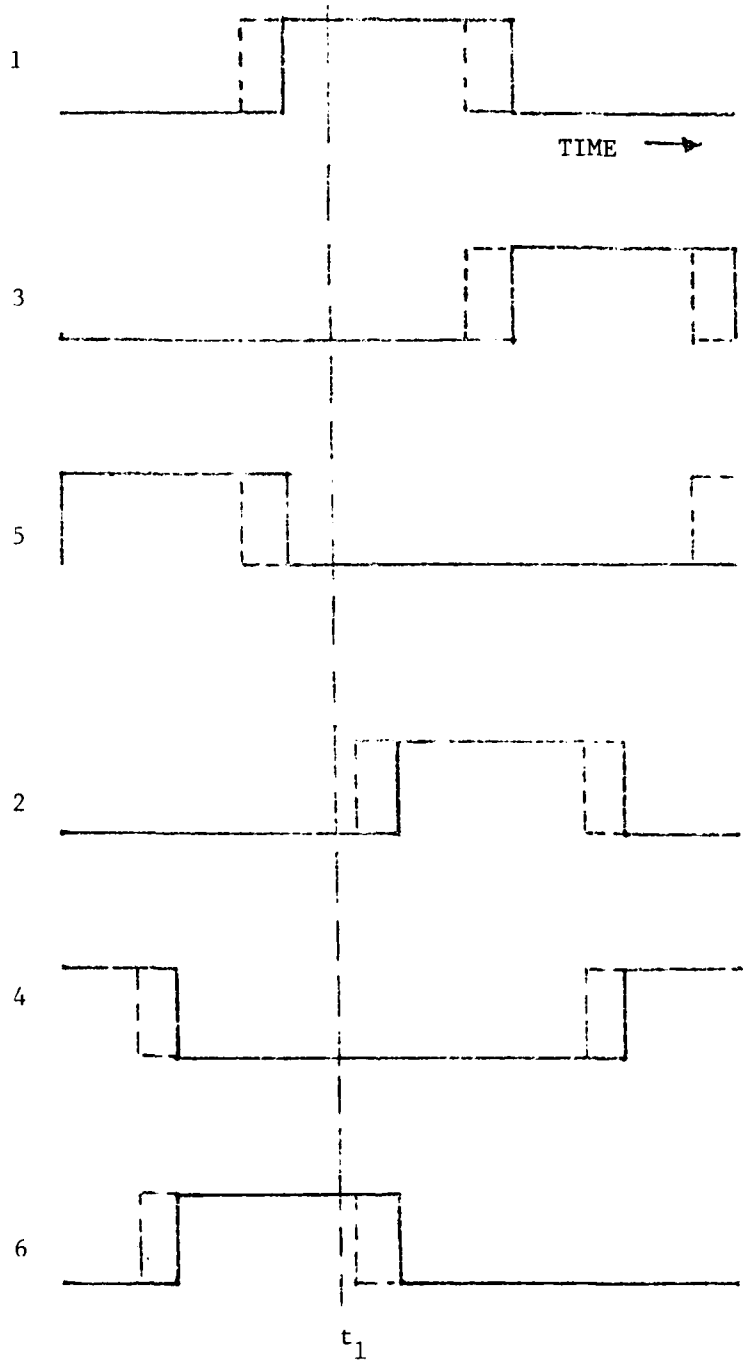

FIGURE 80 SWITCHING CYCLE FOR SIX PHASE SOURCE

six are "on". Also, notice that one of the "on" switches is even numbered and that the other "on" switch is odd numbered. Figures 81 and 82 show the interconnection of the switches between the generator and load. The odd numbered switches are connected to one side of the interphase reactor and the even numbered switches to the other. Therefore, the switching cycle is arranged so that, at any instant of time, two of the generator phases are connected to the interphase reactor and the other four are open. The voltage across the load is the average of the two phase voltages.

The switching cycle shown in Figure 83 is for a zero reference or quiescent condition. The function of the firing logic is to modify the time that the switches change state so the desired output wave is produced. The firing times will be frequency modulated in a manner that responds to the reference wave. These ideas may be placed on an analytical foundation by expressing the switching functions as a Fourier series. These expressions are represented in Figure 83. The fundamental frequency is omega I, the generator frequency. The term, M(t), is the modulating function. In the figure, the solid lines are drawn to represent an M(t) of zero. The dashed line indicates that the phase of the switching functions are shifted when a modulating function is introduced. It is shown by Pelly that when a modulating function is present, the voltage from the generator combines in the interphase reactor to give an expression of the following form:

$$V_o = \frac{3\sqrt{3}}{2\pi} V_I \left(\sin M(t) + \sum_{k=1}^{\infty} \sin \left\{ \frac{6k\omega_1 t + (6k \pm 1) M(t)}{6k \pm 1} \right\} \right)$$

All of the harmonic terms are six times the generator frequency and higher. If the modulating function is defined as:

$$M(t) = \text{ARC SIN} \left[r \sin \omega_o t \right]$$

STATE a		STATE b		STATE c	
1	open	1	open	1	closed
3	open	3	open	3	open
5	closed	5	closed	5	open
2	open	2	open	2	open
4	closed	4	open	4	open
6	open	6	closed	6	closed

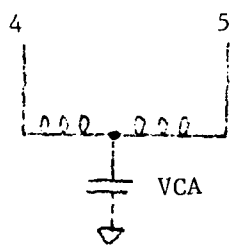

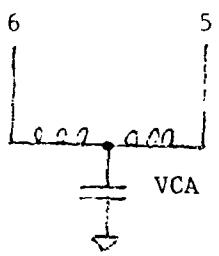

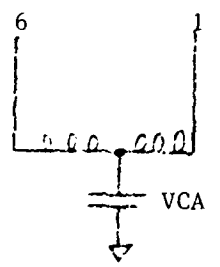

$I_1 = I_3 = I_2 = I_6 = 0$

$L\dot{I}_4 - M\dot{I}_5 + VCA = e_4$

$-M\dot{I}_4 + L\dot{I}_5 + VCA = e_5$

$\dot{VCA} = \frac{1}{C}(I_5 + I_4 - 2_A)$

$L_A\dot{I}_A + R_A I_A = VCA$

$I_1 = I_3 = I_2 = I_4 = 0$

$L\dot{I}_6 - M\dot{I}_5 + VCA = e_6$

$-M\dot{I}_6 + L\dot{I}_5 + VCA = e_5$

$\dot{VCA} = \frac{1}{C}(I_5 + I_6 = I_A)$

$I_3 = I_5 = I_2 = I_4 = 0$

$L\dot{I}_6 - M\dot{I}_1 + VCA = e_6$

$-M\dot{I}_6 + L\dot{I}_1 + VCA = e_1$

$\dot{VCA} = \frac{1}{C}(I_6 + I_1 = I_A)$

FIGURE 81 STATE EQUATIONS

STATE d		STATE e		STATE f	
1	closed	1	open	1	open
3	open	3	closed	3	closed
5	open	5	open	5	open
2	closed	2	closed	2	open
4	open	4	open	4	closed
6	open	6	open	6	open

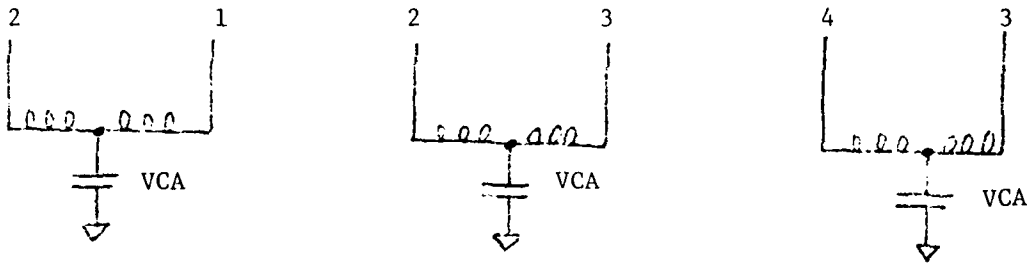

$I_3 = I_5 = I_4 = I_6 = 0$

$L\dot{I}_2 - M\dot{I}_1 + VCA = e_2$

$-M\dot{I}_2 + L\dot{I}_1 + VCA = e_1$

$I_1 = I_5 = I_4 = I_6 = 0$

$L\dot{I}_2 - M\dot{I}_3 + VCA = e_2$

$-M\dot{I}_2 + L\dot{I}_3 + VCA = e_3$

$I_1 = I_5 = I_2 = I_6 = 0$

$L\dot{I}_4 - M\dot{I}_3 + VCA = e_4$

$-M\dot{I}_4 + L\dot{I}_3 + VCA = e_3$

FIGURE 82 STATE EQUATIONS

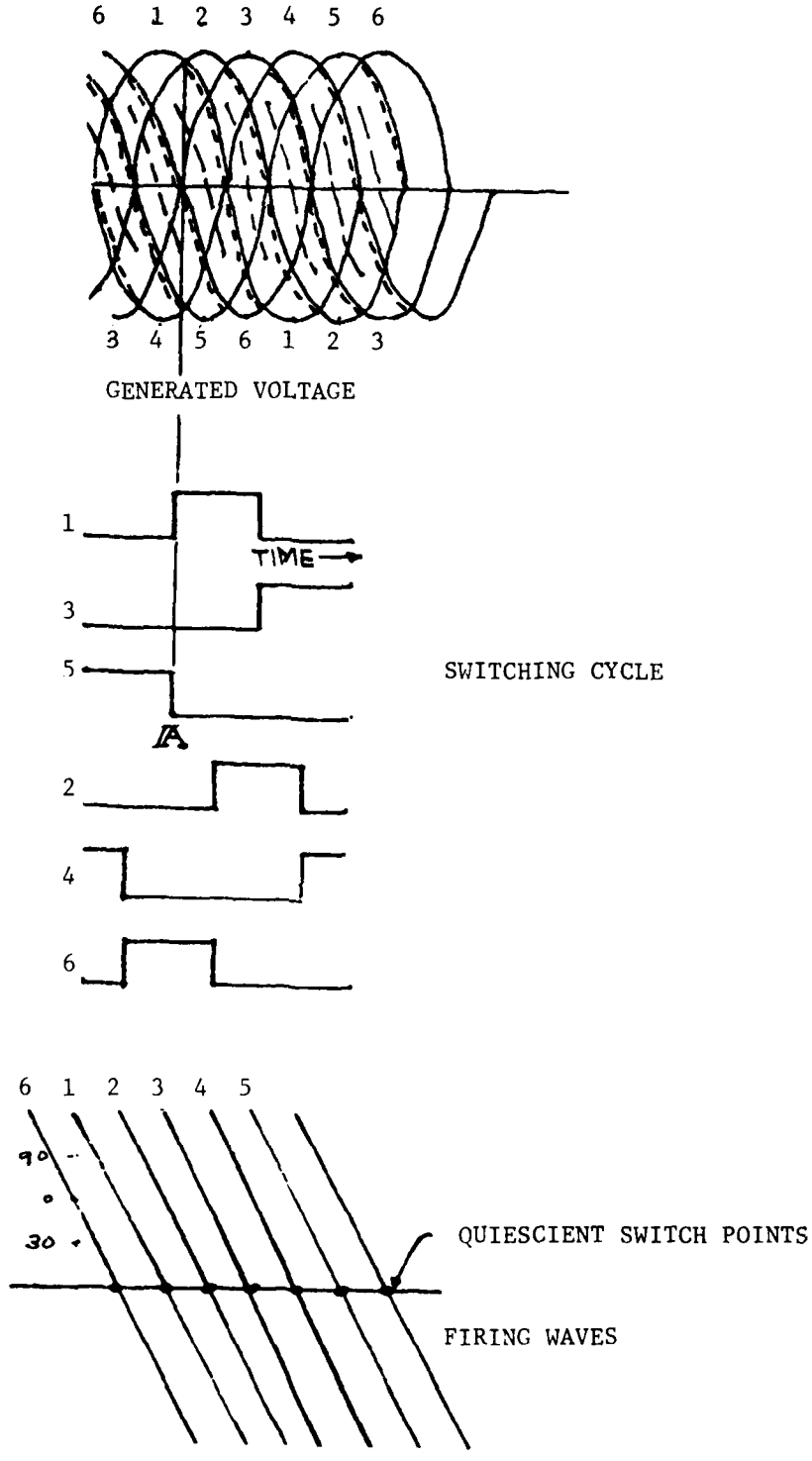

FIGURE 83

FIRING LOGIC - ZERO REFERENCE

then the fundamental component of the output wave is

$$V_o = \frac{3\sqrt{3}}{2\pi} V_I \, r \sin \omega_o t$$

This definition of M(t) allows for the control of the output wave by controlling the magnitude of the parameter r and thus establishes the requirement to compute the ARC SIN function.

6.3.4 Program Logic

Having derived the analytical expression for the modulating function, the remaining task is to define a method of implementing the firing logic. This is accomplished by defining a series of firing waves. A firing wave is associated with each phase of the generator. These firing waves are illustrated as the sloping straight line shown in Figure 84. These lines represent the angular distance from the quiescient switching point. Therefore, the intersection of these firing waves with the modulating function determines the required switching points. In the figure, the modulating functions are represented by the DC reference, as a simple example. This intersection of the DC reference with the firing waves causes the phase of the switching cycle to be shifted, as indicated by the dotted lines in the switching cycle. For example, referring to the vertical line labeled AA, the DC reference intersects firing wave number one at 60°. At this instant, switch 5 goes "off" and switch 1 comes "on". In the figure showing the six phases of the generated voltage, the short dashed lines indicate when a phase is "on". The long dashed lines represent the average of the two "on" phases. Notice that the composite of the long dashed lines produces a signal with a DC average value which is proportional to the DC reference. If the reference is zero, as shown in Figure 82, the average value of the sampled generator wave is zero, as indicated by the long dashed lines.

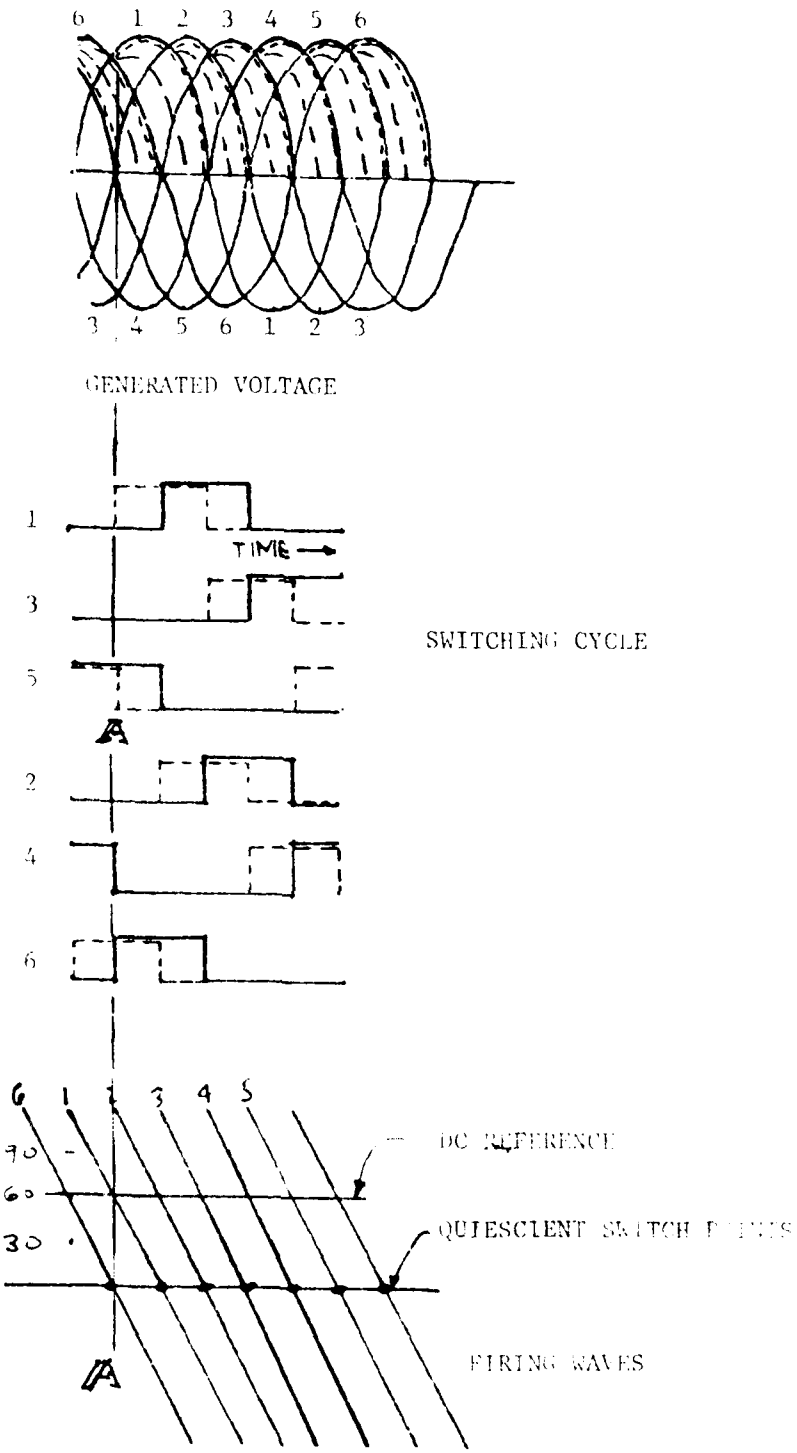

FIGURE 54

FIRING LOGIC - DC REFERENCE

The firing waves and modulating function have been coded into the VSCF transient analysis program and coded in FORTRAN V. This version of FORTRAN allows BLOCK IR structures that eliminate the need for GO TO statements. Extensive use of the BLOCK IR structure was made in writing this code for the firing logic.

After the state of the switches have been determined by the firing logic, it is necessary to write the system equations for that state. This is indicated in Figures 81 and 82. At this point, the saving in programming time that results in requiring only six states to define the operation of the cyclo-converter becomes evident. The coding of a system that simultaneously computes the permutations that occur with three phases is a formidable task. After the state equations are identified, it is necessary to augment the L and R matrices to include the effects of the interphase reactor inductances. These additions, for each state, are shown in Table 66 and 67. The voltage across the filter capacitor, VCA, is proportional to the integral of the sum of the currents from the two generator phases and the load current. The equation for the current through the load is independent of the particular state of the switches. The equations of the system can be represented by the matrix equations.

$$[L][\dot{I}] = [\dot{L}][I] - [R][I] + [V_c]$$
$$\dot{VCA} = \frac{1}{C}[S][I]$$
$$\dot{I}_A = -R_I I_A + VCA$$

The matrix S , appearing in the equation for VCA is a 7 X 1 row matrix consisting of ones and zeros. The value of S for each state is listed in Table 68. The state variables used in program VSCF are defined in Table 69. The elements of L , R , and S change each time the state of the switches change. The program performs the following steps:

TABLE 66

CONSTANT ELEMENTS OF THE X MATRIX

STATE a

$$\begin{vmatrix} 1 & 0 & 0 & 0 & 0 & 0 \\ 0 & 1 & 0 & 0 & 0 & 0 \\ 0 & 0 & 1 & 0 & 0 & 0 \\ 0 & 0 & 0 & L & -M & 0 \\ 0 & 0 & 0 & -M & L & 0 \\ 0 & 0 & 0 & 0 & 0 & 1 \end{vmatrix}$$

STATE b

$$\begin{vmatrix} 1 & 0 & 0 & 0 & 0 & 0 \\ 0 & 1 & 0 & 0 & 0 & 0 \\ 0 & 0 & 1 & 0 & 0 & 0 \\ 0 & 0 & 0 & 1 & 0 & 0 \\ 0 & 0 & 0 & 0 & L & -M \\ 0 & 0 & 0 & 0 & -M & L \end{vmatrix}$$

STATE c

$$\begin{vmatrix} L & 0 & 0 & 0 & 0 & -M \\ 0 & 1 & 0 & 0 & 0 & 0 \\ 0 & 0 & 1 & 0 & 0 & 0 \\ 0 & 0 & 0 & 1 & 0 & 0 \\ 0 & 0 & 0 & 0 & 1 & 0 \\ -M & 0 & 0 & 0 & 0 & L \end{vmatrix}$$

STATE d

$$\begin{vmatrix} L & -M & 0 & 0 & 0 & 0 \\ -M & L & 0 & 0 & 0 & 0 \\ 0 & 0 & 1 & 0 & 0 & 0 \\ 0 & 0 & 0 & 1 & 0 & 0 \\ 0 & 0 & 0 & 0 & 1 & 0 \\ 0 & 0 & 0 & 0 & 0 & 1 \end{vmatrix}$$

STATE e

$$\begin{vmatrix} 1 & 0 & 0 & 0 & 0 & 0 \\ 0 & L & -M & 0 & 0 & 0 \\ 0 & -M & L & 0 & 0 & 0 \\ 0 & 0 & 0 & 1 & 0 & 0 \\ 0 & 0 & 0 & 0 & 1 & 0 \\ 0 & 0 & 0 & 0 & 0 & 1 \end{vmatrix}$$

STATE f

$$\begin{vmatrix} 1 & 0 & 0 & 0 & 0 & 0 \\ 0 & 1 & 0 & 0 & 0 & 0 \\ 0 & 0 & L & -M & 0 & 0 \\ 0 & 0 & -M & L & 0 & 0 \\ 0 & 0 & 0 & 0 & 1 & 0 \\ 0 & 0 & 0 & 0 & 0 & 1 \end{vmatrix}$$

TABLE 67

ELEMENTS OF THE R MATRIX

STATE a

0	0	0	0	0	0
0	0	0	0	0	0
0	0	0	0	0	0
0	0	0	3N+4	0	0
0	0	0	0	4N+5	0
[illegible]	[illegible]	0	0	0	0

STATE b

0	0	0	0	0	0
0	0	0	0	0	0
0	0	0	0	0	0
0	0	0	0	0	0
0	0	0	0	4N+5	0
0	0	0	0		5N+6

STATE c

[illegible]	0	0	0	0	0
0	0	0	0	0	0
0	0	0	0	0	0
0	0	0	0	0	0
0	0	0	0	0	0
0	0	0	0	0	5N+6

STATE d

[illegible]	0	[illegible]	[illegible]	[illegible]	0
0	N+2	[illegible]	[illegible]	[illegible]	0
[illegible]	[illegible]	[illegible]	[illegible]	[illegible]	[illegible]
0	[illegible]	0	[illegible]	0	0
[illegible]	0	[illegible]	0	0	0
0	0	0	0	[illegible]	0

STATE e

[illegible]	[illegible]	[illegible]	0	0	[illegible]
[illegible]	N+2	0	0	0	0
0	0	2N+3	0	0	0
0	0	0	0	0	0
[illegible]	[illegible]	[illegible]	[illegible]	[illegible]	[illegible]
0	0	[illegible]	0	[illegible]	[illegible]

STATE f

0	0	0	0	0	0
0	0	0	0	0	0
0	0	2N+3	0	0	0
0	0	0	3N+4	0	0
0	0	0	0	0	0
[illegible]	0	0	0	0	0

TABLE 68

ELEMENTS OF THE S MATRIX

STATE a							
0	0	0	1	1	0	0	-1
STATE b							
0	0	0	0	1	1	0	-1
STATE c							
1	0	0	0	0	1	0	-1
STATE d							
1	1	0	0	0	0	0	-1
STATE e							
0	1	1	0	0	0	0	-1
STATE f							
0	0	1	1	0	0	0	-1

TABLE 69

DEFINITION OF STATE VARIABLES USED IN PROGRAM VSCF

I1	PHASE 1 ARMATURE CURRENT	Y(1)
I2	PHASE 2 ARMATURE CURRENT	Y(2)
I3	PHASE 3 ARMATURE CURRENT	Y(3)
I4	PHASE 4 ARMATURE CURRENT	Y(4)
I5	PHASE 5 ARMATURE CURRENT	Y(5)
I6	PHASE 6 ARMATURE CURRENT	Y(6)
IF	FIELD CURRENT	Y(7)
VCA	VOLTAGE ACROSS FILTER CAPACITOR	Y(8)
IA	PHASE A LOAD CURRENT	Y(9)

1) Determine the state of the switches from the firing logic.

2) Set the elements of L , R , and S ; knowing the state of the switches.

3) Solve the differential equations that define the system for one integration step.

4) Repeat until the range of the DO loop, K2, is satisfied.

6.4 Stability Analysis

The stability of an electrical power system is effected by feedback loops that have been introduced for control purposes. In presently deployed aircraft electrical systems, the primary feedback loops are voltages fed back to control the field current and differential power feedback to control the input power in parallel operations. In advance aircraft electrical system concepts, consideration has been given to employing microprocessors in control loops. For all of these situations, a stability analysis is required during the design phase to insure satisfactory operation.

The primary analytical tools that are available to determine the stability of a system are restricted to systems that are described by ordinary linear differential equations with constant coefficients. Salient pole generators are described by ordinary linear differential equations with periodic coefficients. Microprocessors introduce transport delays and non-linearities into the signal processing operations. The other approach to determine the stability of a system is to construct a math model of system and obtain a time history of the system response on a computer.

For systems that can be described by ordinary differential equations with constant coefficients, the system stability can be determined by developing characteristic equations in operational form. The roots of the characteristic equation furnish all information necessary to determine the stability of the system. The stability characteristics of a system may be

conveniently illustrated on a Root Locus Plot. This is a plot of the roots of the characteristic equation in the complex plane. Even though this type of analysis is limited, it is useful as an approximation. In systems where the effects of non-linearities are not dominant, the Root Locus gives an approximate picture of the stability situation that is obtained with considerable less effort and expense than a computer program would require.

As an example, consider a salient pole synchronous generator with a voltage regulator. The voltage regulator is comprised of elements that can be described by ordinary differential equations with constant coefficients. The generator, on the other hand, requires ordinary equations with periodic coefficients. As an approximation, the generator response can be described by a single time constant comprised of the self inductance of the armature and resistance of the armature and load. For the generator parameters listed in Table 54, the dominant time constant of the generator is approximately .0004 seconds. This is an order of magnitude smaller than any time constant of the voltage regulator, as illustrated in Table 51.

To compare the effect of the generator response, a Root Locus of a generator/voltage regulator loop was prepared. The voltage regulator is described by the blocks shown in Figure 71. The generator was described by a single gain term with all dynamic terms neglected. The Root Locus plot for this system is shown in Figure 85. The primary branch occurs from the real axis poles located at -83 and -100. The gain for instability is AMGAIN=750. The frequency of instability is 200 rad/sec. From the plot it may be seen that a gain between 100 and 320 would give a satisfactory dynamic response.

This result may be compared with a time history of Program GENR. The result obtained from Program GENR predicts a gain for instability of AMGAIN=1000 and a frequency of instability of 160 rad/sec. This point is indicated by the triangle in Figure 85. The effect of the generator dynamics

CHARACTERISTIC EQUATION

$$1 + \frac{1.85(10)^4 \ (S+10)AMGAIN}{(S+7.93)(S+83)(S+100)(S+210)} = 0$$

0 - CLOSED LOOP POLES

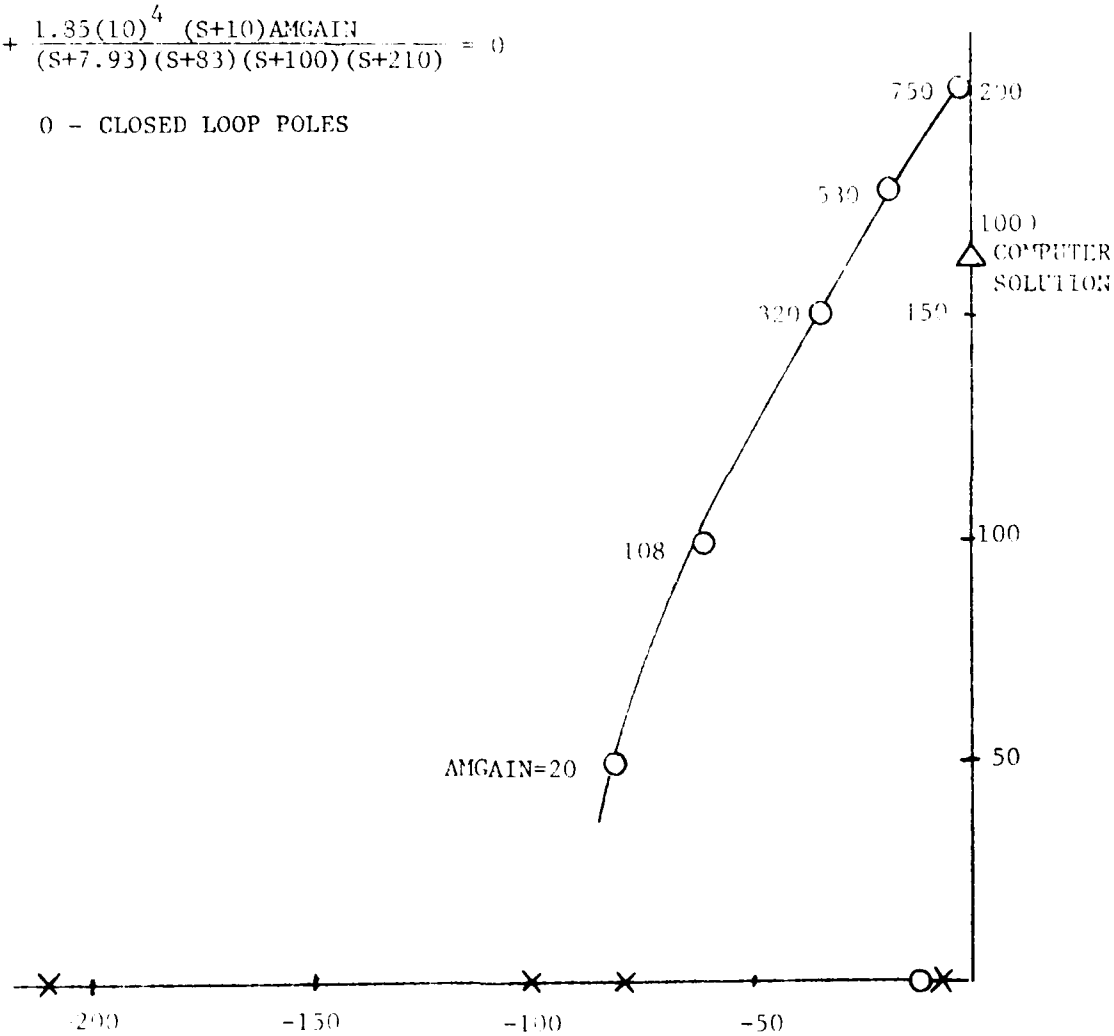

ROOT LOCUS OF GENERATOR/VOLTAGE REGULATOR

FIGURE 85

is to introduce phase lag and attenuation. This is verified by the fact that the prediction of the computer solution places the unstable pole to the right of the locus, which is a region of more phase lag.

From this example, it may be seen that the programs developed under this effort can be used as an effective tool to determine the stability of advanced aircraft electrical systems.

6.5 Validation of Math Model

The ultimate validation of a math model occurs when the output of the model is compared with the output of the system it represents. Another approach to validation is to compare results with another program of similar capability. This will insure that math modeling is the same. The validity of the coefficients that are entered in the program will effect the result. For the case of an electrical generator, these coefficients represent the self and mutual inductances of the generator coils and the resistances of the coils. This data can be verified by performing a check run with the program and comparing the results with a test run on a generator. When test data on an actual system is not available, the model can often be simplified to the point that analytical checks can be made on the output of the model. For this program, the generator coefficients have been furnished by Sundstrand. A check run of the generator transient response simulation has been provided by Sundstrand. This transient response was obtained from a general purpose electrical simulation program called SCEPTRE. The voltage regulator was not included in this simulation. The transient responses obtained from these programs are plotted in Figures 86 through 89. The Vought simulations are shown in Figures 87 and 89. The Sundstrand simulations are shown in Figures 86 and 88. Both responses have initial conditions of zero armature currents. The two responses compare favorably. The Sundstrand data exhibits larger over shoots during the initial transient period. This is due to the fact that the Sundstrand data had thirty amps for the initial field current and the Vought

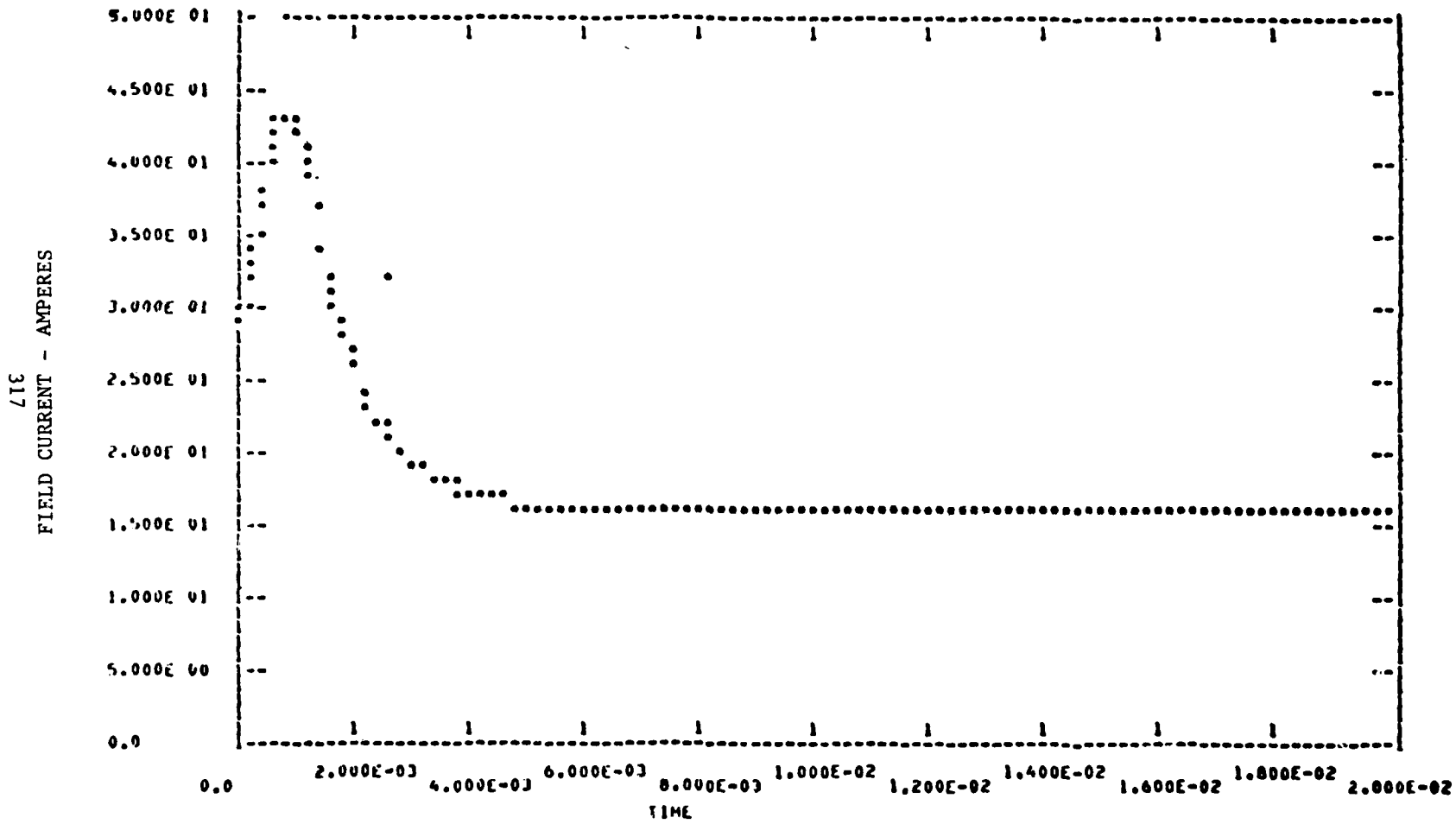

FIGURE 86 FIELD CURRENT RESPONSE - SUNDSTRAND SIMULATION

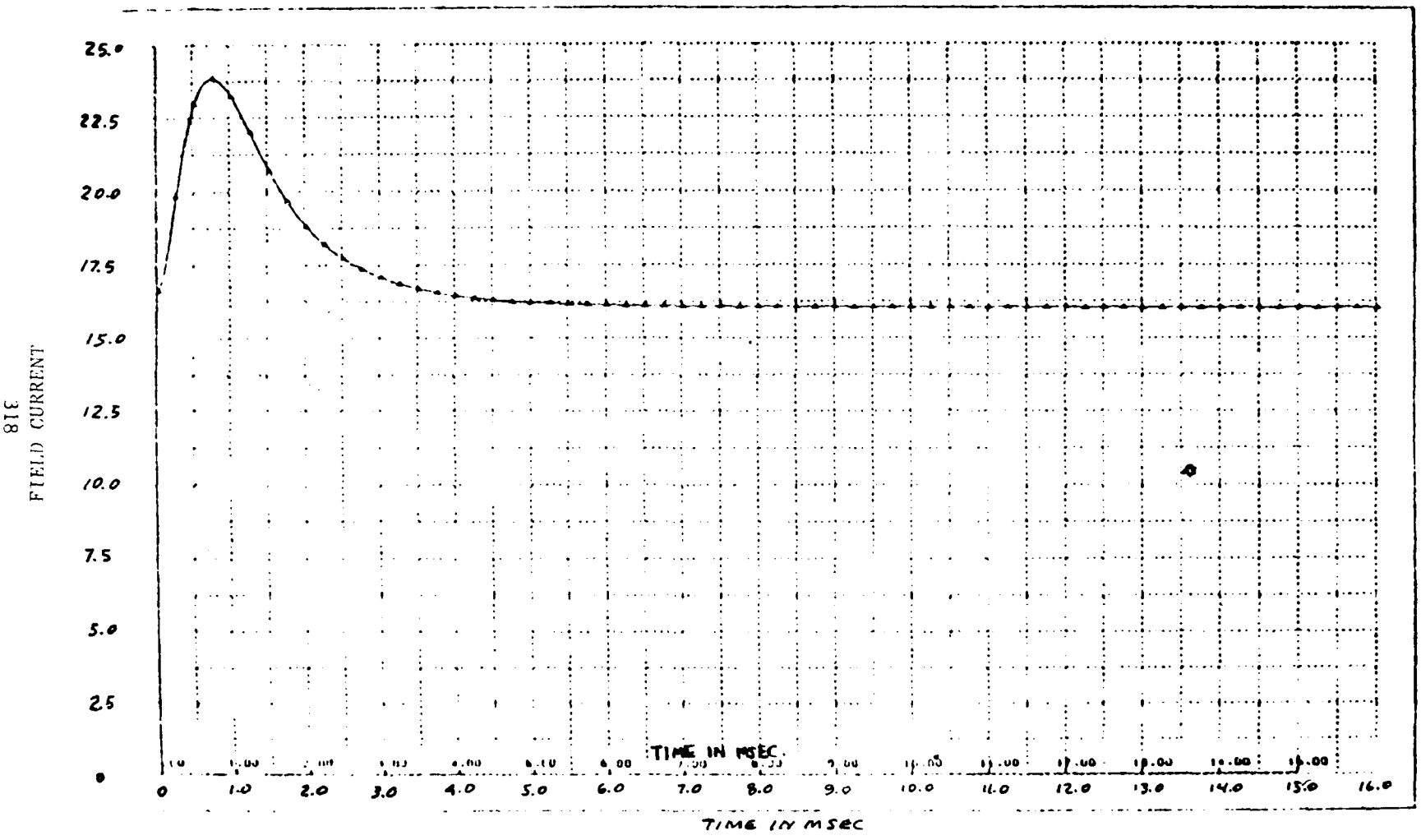

FIGURE 87 FIELD CURRENT RESPONSE - VOUGHT SIMULATION

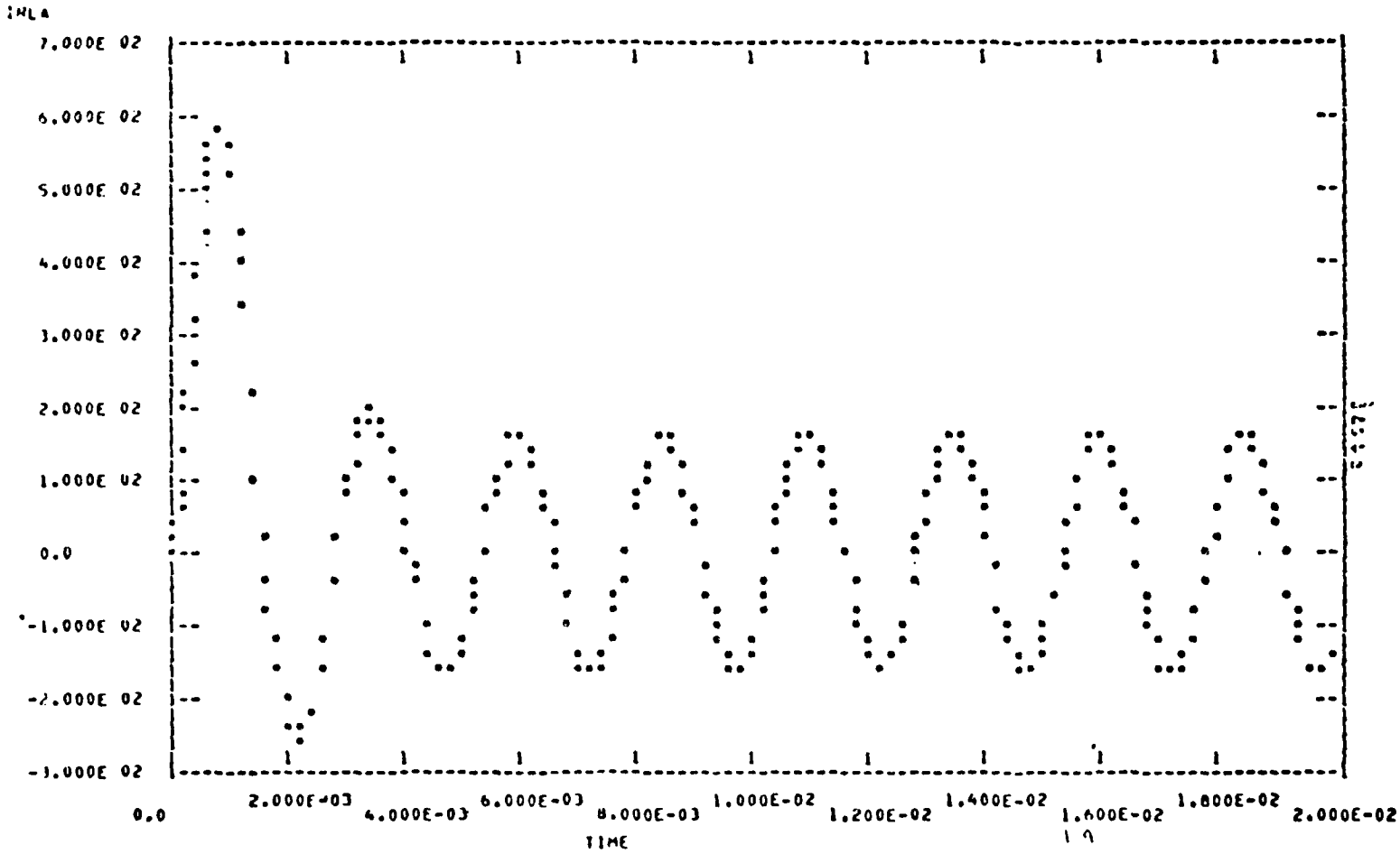

FIGURE 88 OUTPUT VOLTAGE RESPONSE - SUNDSTRAND SIMULATION

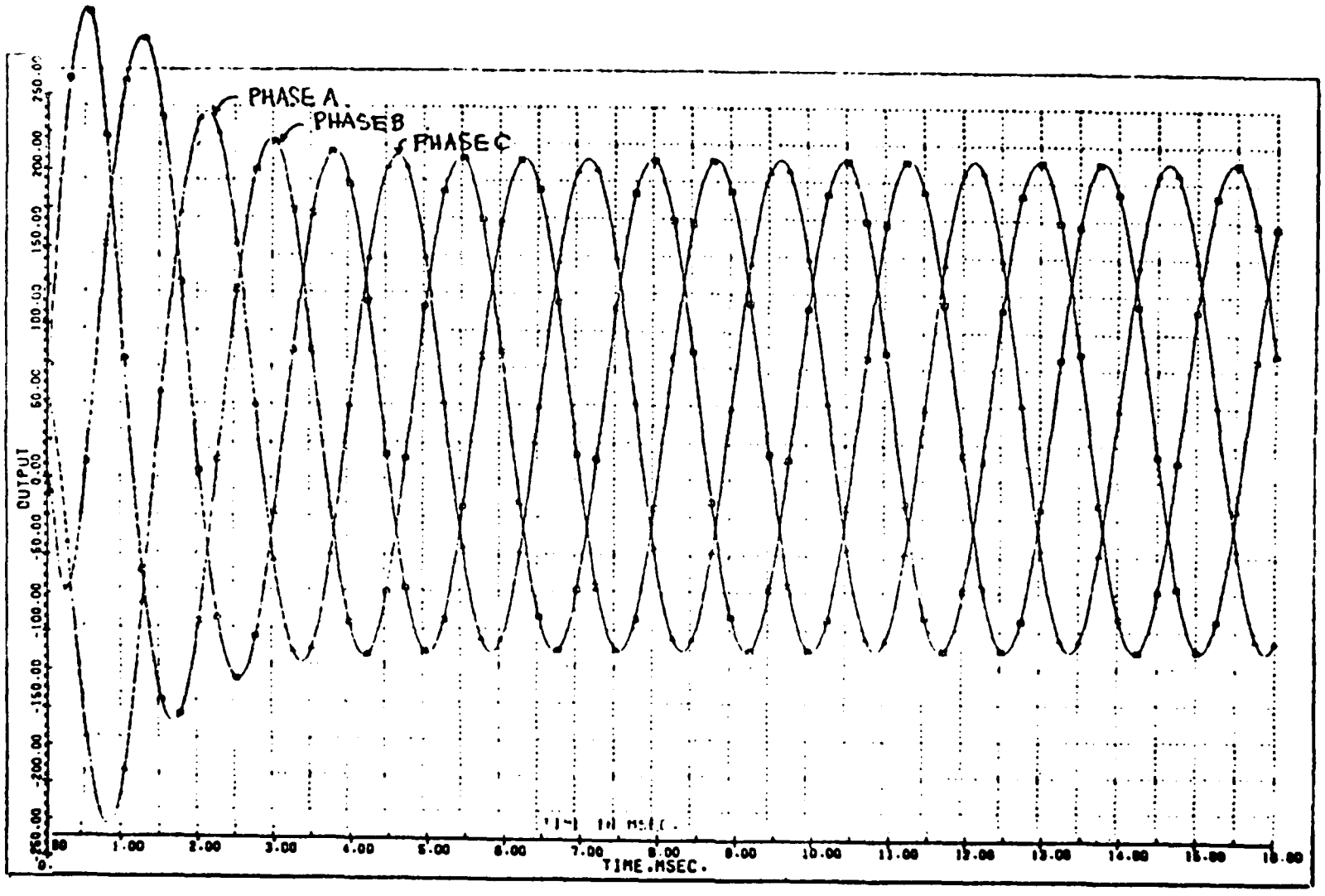

FIGURE 89 OUTPUT VOLTAGE SIMULATION - VOUGHT SIMULATION

data used sixteen amps. (Sundstrand data was received after Vought's simulation was complete.) The steady state results show close agreement.

Another set of simulation runs were furnished by Sundstrand in which the voltage regulator was included. Plots of the simulation are shown in Figures 90 and 91. For each simulation, a step change in load was applied as indicated by the vertical arrow in the figures. The characteristic of the transient is the same for the Vought (Figures 92 and 93) and the Sundstrand simulations. The voltage drops after the application of the load change and then rises back to the original value. The rise time is about 20 milliseconds for each simulation. Referring to the transient on the field current, there is an initial spike due to mutual coupling between the armature and field, followed by a rise in field current with a rise time of about 20 milliseconds.

These results may be compared with a test run performed by Sundstrand in which the load is suddenly changed. A plot of terminal voltage vs. time obtained by test is shown in Figure 94. The general character of the transient is approximately the same as that obtained by the Vought and the Sundstrand simulations. The voltage drops after the load change is applied and recovers with a response time of approximately 15 milliseconds.

These comparisons indicate that the simulation of a generator voltage regulator gives a close approximation of the transient response of an actual IDG generator-voltage regulator system.

As an example of analytical verification, the generator equations can be simplified so that the response can be readily calculated. If all mutual coupling terms and all periodic terms are dropped, the equations become uncoupled and the steady state solution can be immediately written down.The simplified equations are shown in Table 68. The steady state solution is comprised of a simple algebraic expression. For the nominal values of inductances and resistances, the armature current is 259 amps for a load of .75 ohms and a load of .375 ohms gives an armature current of 313.59. The

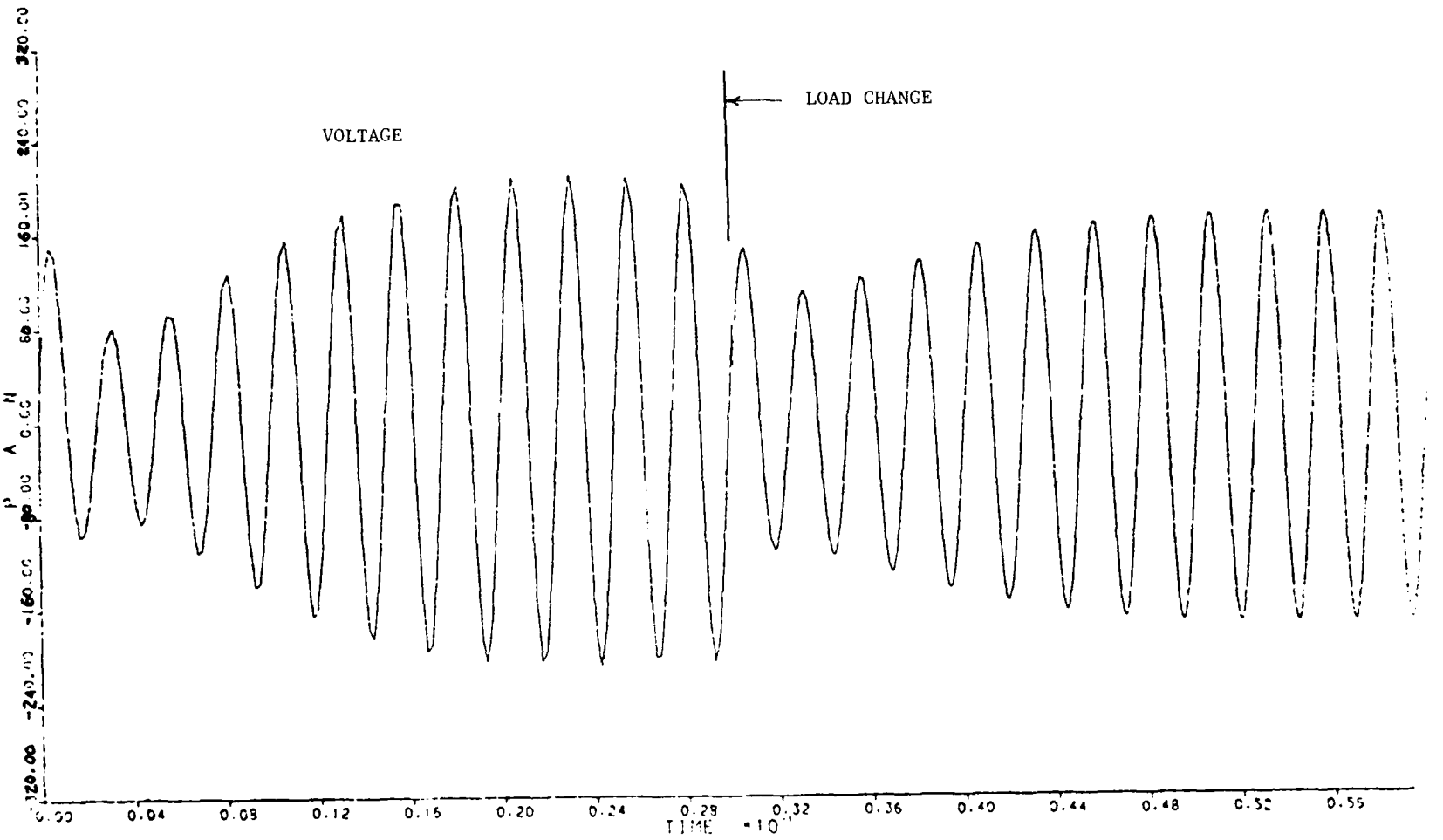

FIGURE 90 ON-LOAD VOLTAGE TRANSIENT - SUNDSTRAND SIMULATION

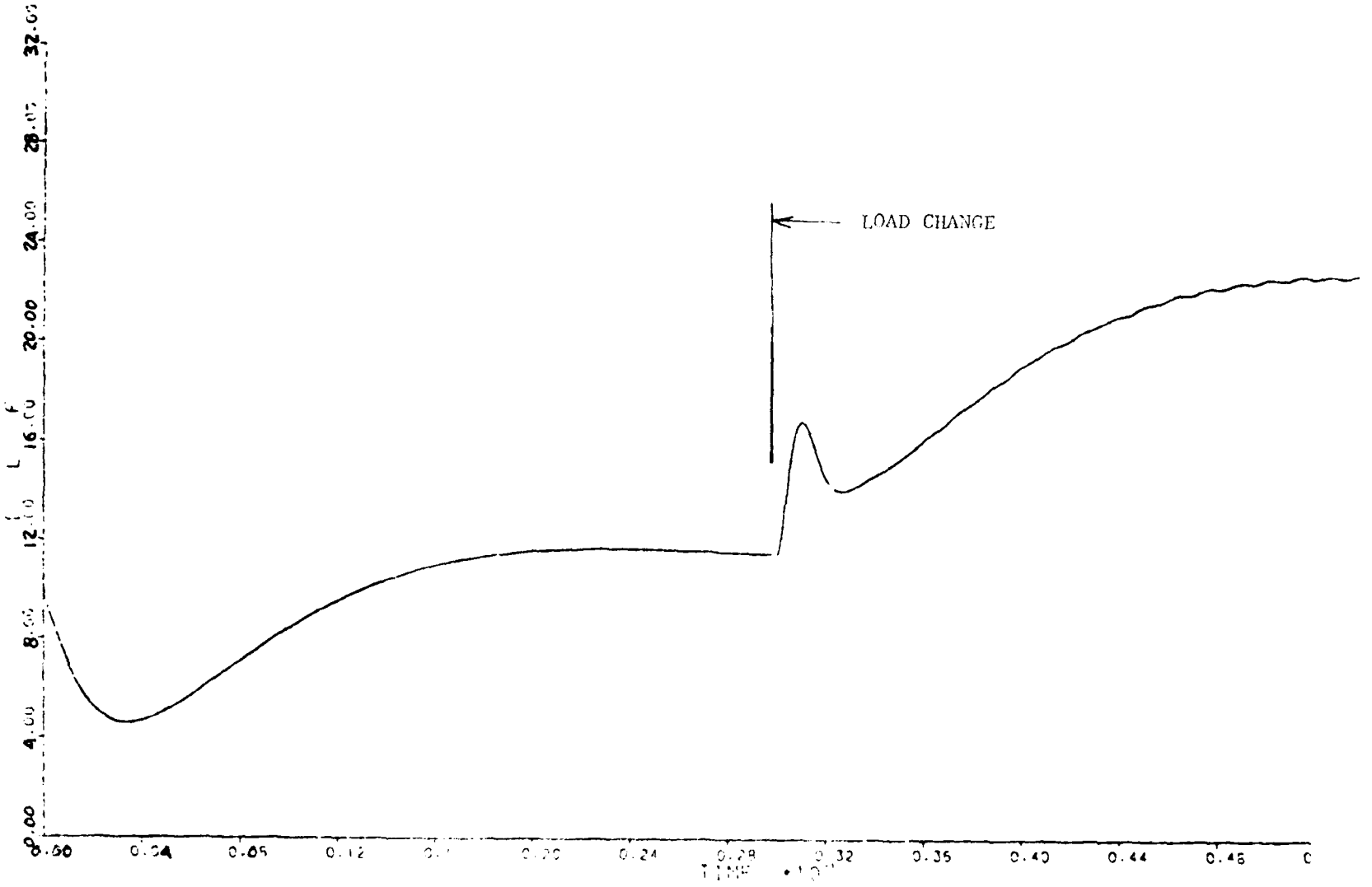

FIGURE 91 ON-LOAD FIELD CURRENT TRANSIENT - SUNDSTRAND SIMULATION

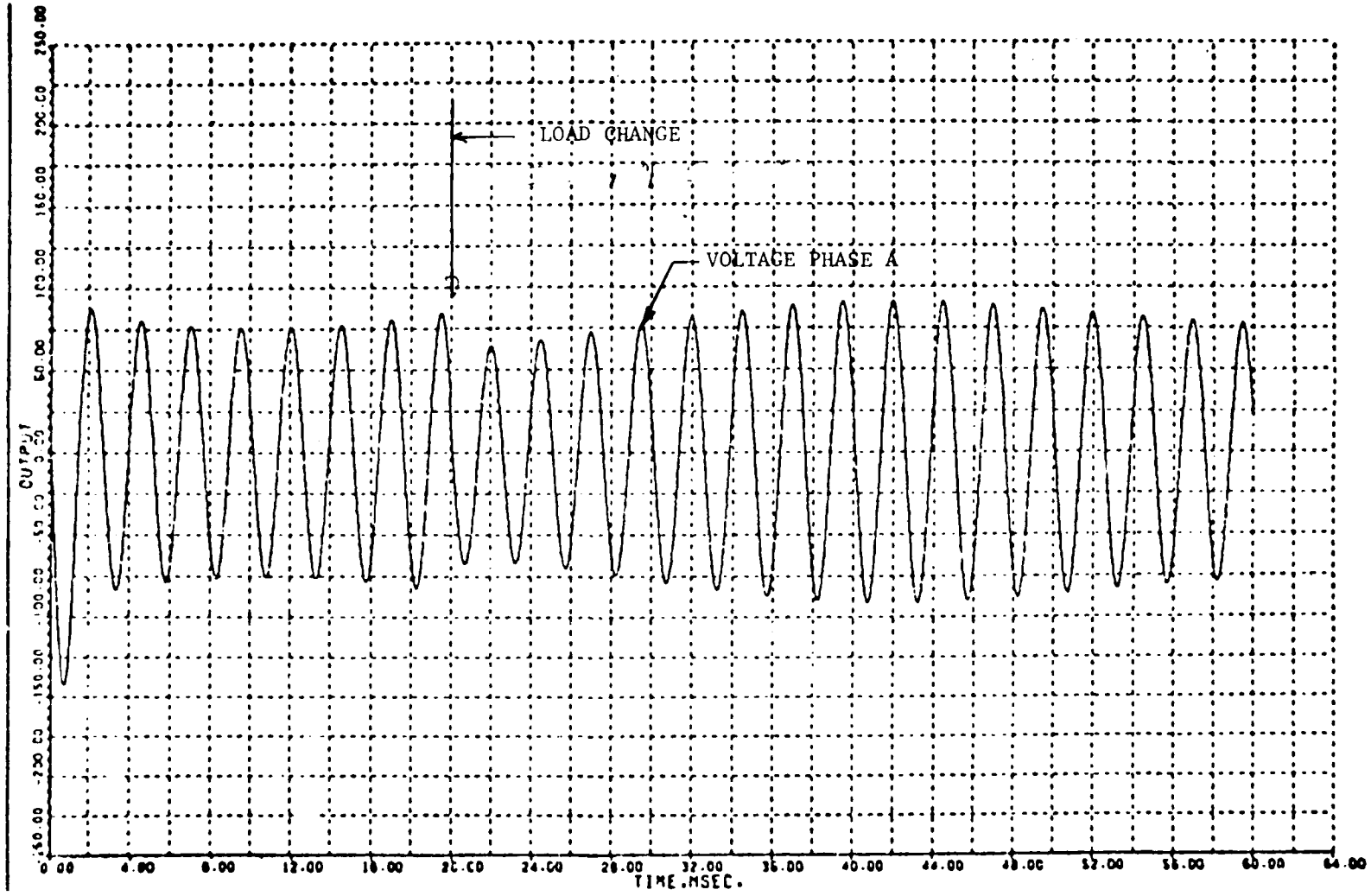

1.0 PU TO 2.0 PU @ 0.8 LAGGING PF AMGAIN = 500

FIGURE 92 ON-LOAD VOLTAGE TRANSIENT - VOUGHT SIMULATION

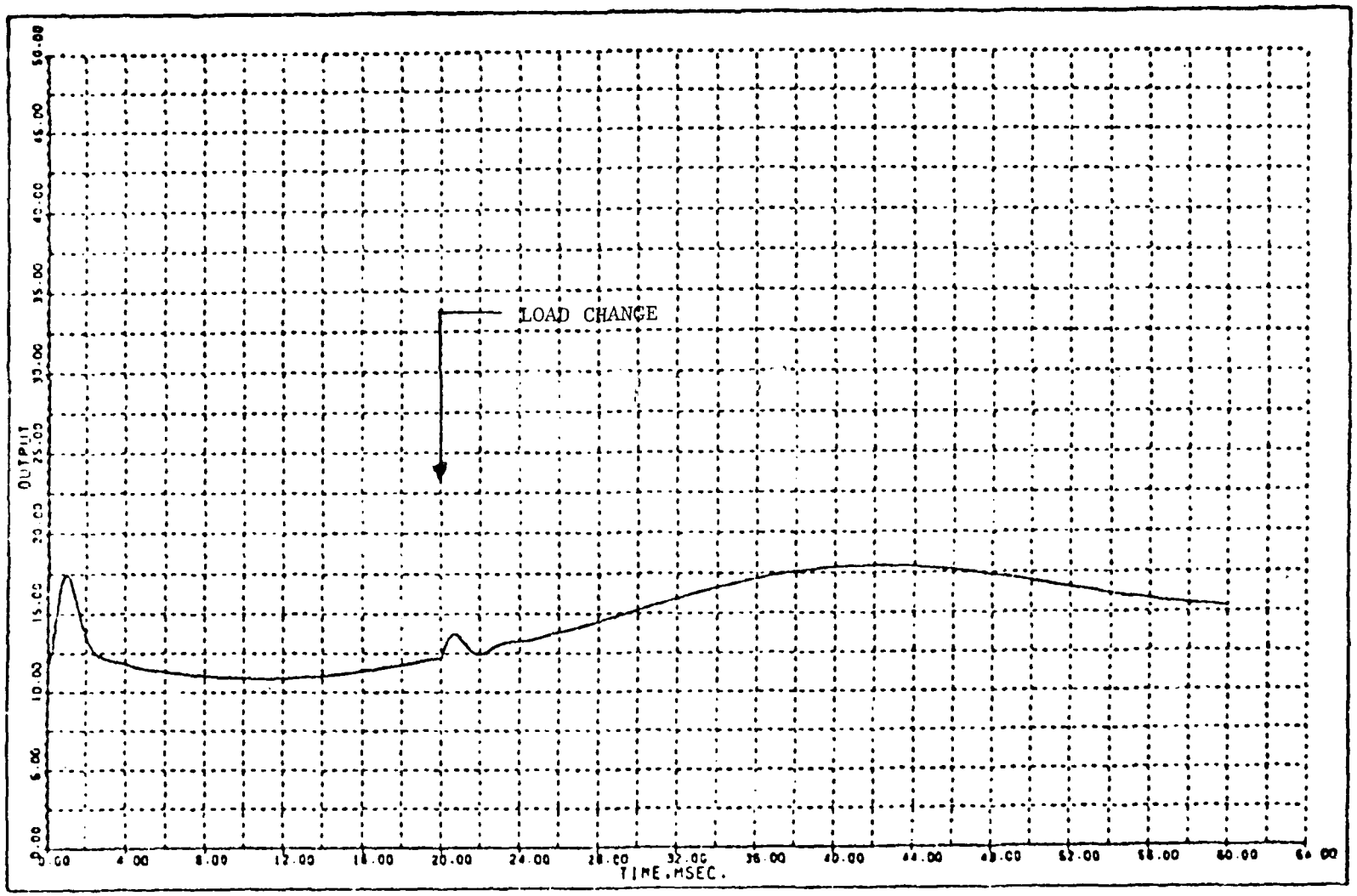

FIGURE 93 ON-LOAD FIELD CURRENT TRANSIENT - VOUGHT SIMULATION

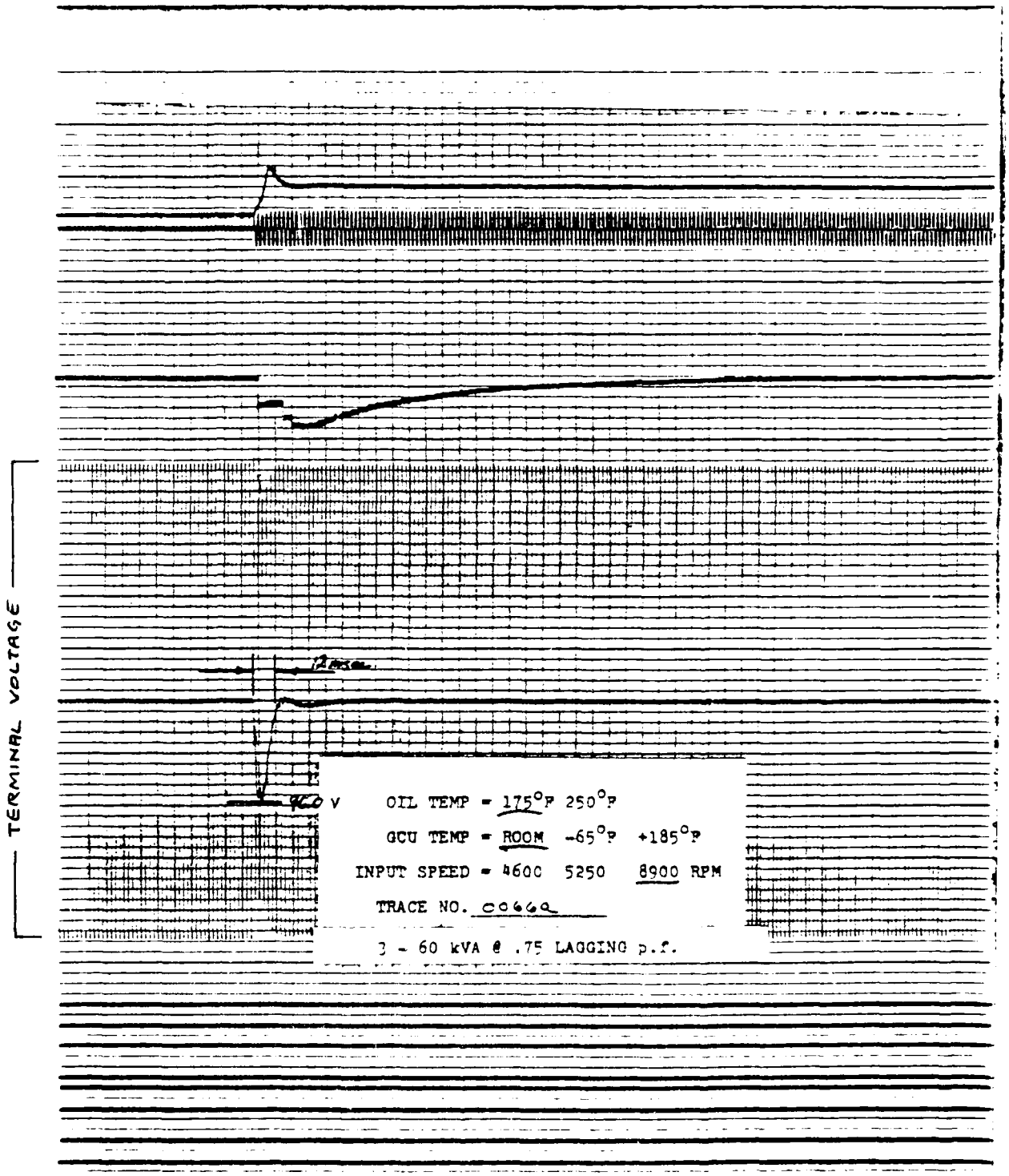

FIGURE 94 ON-LOAD VOLTAGE TRANSIENT - SUNDSTRAND TEST DATA

terminal voltages are 194 and 117 volts respectively for the two cases. The values of current and voltage refer to the amplitude of the waves.

These results may be compared with a time history obtained from program GENR. For these runs the coefficients were set to duplicate the equations listed in Table 70. The voltage regulator loop was suppressed and the field current was held to a constant value of 16 amps. The results are listed in Table 71 for the two cases of .75 ohms and .375 ohms. The peak current is 258 amps and the peak voltage is 194 volts for a load resistance of .75 ohms. For a load resistance of .375 ohms, the peak current is 305 amps and the peak voltage is 115 volts. These results compare favorably with the results obtained from the analytical expression. This indicates that the essential features of the program are performing in the manner intended.

TABLE 70

SIMPLIFIED EQUATIONS OF GENERATOR

$$XLAO\ \dot{I}_A + (R_A + R_L)I_A = XMFO * I_F * THDOT * SIN(THETA)$$

$$XLAO\ \dot{I}_B + (R_A + R_L)I_B = XMFO * I_F * THDOT * SIN(THETA-120)$$

$$XLAO\ \dot{I}_C + (R_A + R_L)I_C = XMFO * I_F * THDOT * SIN\ (THETA-240)$$

$I_F = 16$

STEADY STATE SOLUTION

$$I_A = \frac{XMFO * I_F * TADOT}{SQRT((THDOT * XLAO)^2+(R_A+R_L)^2)}$$

$V_A = I * R_L$

FOR XMFO = .0003557

R_A = .02

R_L = .75

THDOT = 2513

I_F = 16

$$I_A = \frac{.0003557(16)(2513)}{AQRT(.89^2+.77^2)} = 259.46$$

$V_A = (259.46)(.75) = 194.59$

FOR $R_L = .375$

$$I_A = \frac{.0003557(16)(2513)}{SQRT(.89^2+.395^2)} = 313.59$$

$V_A = (313.59)(.375) = 117.59$

TABLE 71

SIMULATION TEST RUNS

T, MSEC	I_A	I_B	I_C	I_F	V_A	V_B	V_C	V_R
0.000	0.	0.	0.	16.	0.	0.	0.	0.
.250	-55.	161.	-106.	16.	-41.	121.	-79.	121.
.500	-167.	241.	-74.	16.	-125.	181.	-56.	181.
.750	-260.	218.	43.	16.	-195.	163.	32.	163.
1.000	-281.	105.	176.	16.	-211.	79.	132.	132.
1.250	-210.	-52.	261.	16.	-157.	-39.	196.	196.
1.500	-67.	-191.	258.	16.	-50.	-143.	193.	193.
1.750	96.	-258.	163.	16.	72.	-194.	122.	122.
2.000	219.	-228.	9.	16.	164.	-171.	7.	164.
2.250	257.	-111.	-146.	16.	193.	-83.	-109.	193.
2.500	196.	48.	-244.	16.	147.	36.	-183.	147.
2.750	59.	189.	-248.	16.	44.	142.	-186.	142.
3.000	-101.	257.	-157.	16.	-75.	193.	-118.	193.
3.250	-222.	227.	-6.	16.	-166.	171.	-4.	171.
3.500	-259.	111.	148.	16.	-194.	83.	111.	111.
3.750	-197.	-48.	245.	16.	-147.	-36.	184.	184.
4.000	-60.	-189.	248.	16.	-45.	-142.	186.	186.
4.250	100.	-257.	157.	16.	75.	-193.	118.	118.
4.500	222.	-227.	6.	16.	166.	-171.	4.	166.
4.750	258.	-111.	-148.	16.	194.	-83.	-111.	194.

$R_L = .75$

T,MSEC	I_A	I_B	I_C	I_F	V_A	V_B	V_C	V_R
0.000	0.	0.	0.	16.	0.	0.	0.	[illegible]
.250	-60.	181.	-122.	16.	-22.	68.	-46.	68.
.500	-196.	305.	-109.	16.	-74.	114.	-41.	114.
.750	-333.	321.	12.	16.	-125.	120.	5.	120.
1.000	-400.	221.	179.	16.	-150.	83.	67.	83.
1.250	-358.	42.	316.	16.	-134.	16.	118.	118.
1.500	-211.	-149.	361.	16.	-79.	-56.	135.	135.
1.750	-9.	-281.	290.	16.	-3.	-105.	109.	109.
2.000	178.	-303.	125.	16.	67.	-114.	47.	67.
2.250	283.	-207.	-75.	16.	106.	-78.	-28.	106.
2.500	269.	-31.	-237.	16.	101.	-12.	-89.	101.
2.750	144.	157.	-301.	16.	54.	59.	-113.	59.
3.000	-42.	287.	-245.	16.	-16.	108.	-92.	108.
3.250	-217.	307.	-91.	16.	-81.	115.	-34.	115.
3.500	-312.	211.	101.	16.	-117.	79.	38.	79.
3.750	-291.	34.	257.	16.	-109.	13.	96.	96.
4.000	-161.	-155.	316.	16.	-60.	-58.	119.	119.
4.250	29.	-285.	256.	16.	11.	-107.	96.	96.
4.500	207.	-306.	99.	16.	78.	-115.	37.	78.
4.750	305.	-210.	-95.	16.	114.	-79.	-35.	114.

$R_L = .375$

SECTION VII

CONCLUSIONS

The Program objectives have been concluded as reported herein. The conclusions are as follows:

7.1 POWER GENERATION

The power generation requirements for the 1990 time period can be met with both the VSCF (cycloconverter) and the IDG concepts. Definition and evaluation of specific weapon system mission and performance requirements will dictate which of the two concepts is optimum. The CSD (drive separate from generator) is not considered a viable system for new electrical system designs, primarily because of the weight penalty imposed by this system.

7.2 ELECTRIC ENGINE START

Electric engine start can be provided by both the VSCF and IDG technologies. Significant advantages for multi-engine aircraft and marginal advantages for single engine aircraft are achieved over conventional self-start concepts under the following conditions:

a. An APU driven generator is provided with rating sufficient to start the engine.

b. A generator is provided on each engine.

c. The rating of the engine mounted generator is established by the utilization equipment load demand plus growth requirement and is sufficient to start the engine.

7.3 EMUX INTEGRATED GENERATOR CONTROL

It is not feasible to perform the GCU functions (regulation and protection) within the EMUX system because of the long throughput time required by EMUX. GCU interface with EMUX for load management and BIT functions is feasible. Implementation of the GCU is quasi-feasible in performing BIT (Built-In-Test) functions and some control functions. Because of response requirements and signal conditioning complexity, it is not recommended that the generator regulation and protection functions be performed with the microprocessor.

7.4 "GAPLESS" POWER

A true "gapless" power bus covering all contingencies is not possible in an AC system. Power interruptions less than 20 milliseconds are possible by establishing a bus of limited power capacity and using solid state or hybrid controllers for bus transfer.

7.5 AC BUS CONTROLLERS

Electromechanical contactors are best for high current bus (line and bus-tie) controller applications. Solid state and hybrid controllers can perform switching functions not possible with electromechanical devices and are recommended for use for low current and other specific applications requiring improved switching speed and overall improved switching performance.

7.6 POWER DISTRIBUTION AND CONTROL

An EMUX implemented power distribution system offers several advantages over the conventionally implemented system. The EMUX system includes signal input stimulus with signal sources, power switching and circuit protection with

power controllers, and computerized control logic implementation. Application of EMUX is recommended for all military aircraft of moderate to high electrical/electronic complexities. Application on low complexity type aircraft may also be desirable or dictated where emphasis is placed on performance and application flexibility or where further development (use of more MSI/LSI to accomplish circuit functions) of EMUX is pursued.

7.7 SYSTEM MODELING

The computer programs developed for modeling the IDG and VSCF electrical systems provide a means for evaluating the dynamic responses of power systems when subjected to various load changes and/or operating conditions. The programs can be used to determine system stability and performance, to provide useful data during basic design and to evaluate a completed design prior to system fabrication and/or testing.

SECTION VIII

RECOMMENDATIONS

It is recommended that the developed computer models of the electric power system be expanded to include the following details:

- Model the condition for electric engine start.
- Model hybrid bus controller components and incorporate into system model.
- Model solid state power controllers and Remote Controlled Circuit Breakers (RCCBs) and incorporate into system model.
- Incorporate effects of transport delays of EMUX into system model.
- Expand the feeder-load network model from a lumped configuration model to correspond to the detail distributed networks for the single engine and multi-engine networks defined in Section IV.

The primary negative impact of adding these functions to the developed programs is increased CPU time. The expanded models will enhance the usefullness and overall acceptance of the programs as a design analysis tool. The electric engine start will add an order of magnitude increase in computation time to program GENR. The hybrid bus controller, power controller, remote controlled circuit breaker and transport delay functions can be inserted into program GENRDIS. A significant increase in CPU time also results. When the number of states become large, the run time can be reduced by employing alogrithms that are specifically developed for large systems. The run time can also be reduced by employing alogrithms with variable integration steps. It is recommended that algorithms designed for sparse matrices and variable step size alogrithms be incorporated into these programs. It is further recommended that a cycloconverter switching concept employing power FETs be modeled. Program linking should also be incorporated

into the programs such that the operator can easily designate or select the model elements to be included in a particular run, i.e., generator alone, generator plus CSD, generator plus CSD plus distribution network, etc. Various operational runs should be made of both normal and failure mode states for the purpose of acquiring a good data base of the systems modeled. The results should be compared to performance and failure data obtained from actual operational systems and hardware as a means of validating and therefore giving a measure of confidence in the models as an analysis tool.

REFERENCES

1. J.R. Perkins, A.J. Marek, J.L. Jones, "SOSTEL Design Matrix, DHS Configuration Control and Technical Consultation", Report No. 2-57110/3R-3131 dated November 1973.

2. J.R. Perkins, A.J. Marek, J.L. Jones, D.E. Lautner, "Advanced Aircraft Electrical System, A-7E Prototype Design", Report NADC-76193-30 dated August 1977.

3. Telephonics Corporation, "Advanced Solid State Power Controller Development, Phase I Study Report", Report No. AFAPL-TR-78-55 dated September 15, 1978.

4. A.W. Schmidt, "Impact of Aircraft Electrical Power Quality on Utilization Equipment", prepared by General Electric Aircraft Equipment Division for Naval Air Station, Patuxent River, MD., July 1970.

5. V.H. Johns, "Advanced Electrical System Studies and Consultation", Report No. 2-53110/2R-2984, Vought Corporation, dated 1972.

6. J.E. Phelips, "Influence of Solid State Electrical Distribution on Aircraft Power Generation Solid State Power Controller Compatibility, AFAPL-TR-74-86.

7. Lee J. Bailey, D.L. LaFuze, "150 KVA Samarium Cobalt VSCF Starter Generator Electrical System Phase I", Report No. AFAPL-TR-76-8, General Electric, dated March 1976.

8. D.L. LaFuze, "VSCF Engine Start Capability", Aircraft Electrical Power Seminar by General Electric on 10-11 May 1977.

9. D.W. Exner and G.H. Singer, Jr., "Impedance Data for 400 Hz Aircraft Distribution Systems", AIEE Transactions, Vol. 71, Part II, 1952, pp. 410-419.

10. Static Power Frequency Changers, L. Gyugyi and B.R. Pelly.

11. Charles Concordia "Synchronous Machines", Wiley, New York, 1951

APPENDIX A

USERS GUIDE FOR DEVELOPED

COMPUTER PROGRAMS

USER'S GUIDE

INTRODUCTION

This section describes the mechanics for setting up the developed programs. The programs are coded in FORTRAN V and are arranged to have the output data sent to a line printer. Each program is similarly structured. All data transfer between subroutines is achieved by means of common statements. All input data is entered by means of DATA statements. Each program requires three basic steps to provide a run. These are:

1. Set the initial conditions.
2. Define the system parameters.
3. Define the control parameters.

The following sections describe the steops required to set up each program. Program listings and sample runs are given.

The instructions are identified by program line number. If the user desires to add or remove lines from the program, the line number will change. The user must document program changes and modify the line numbers in the instructions.

USER'S GUIDE

PROGRAM GENR

Model Description

This program contains a model for a three phase, salient pole generator with damper windings. A voltage regulator achieves control by adjusting the field current according to the average of the three phase terminal voltages. A listing of program GENR is shown in Table A-1. The load in each phase is modeled as a single resistance and inductance.

The program listing that appears in Table A-1 contains representative values for the parameters and the control variables. The programs are written in FORTRAN V.

INPUT DATA

Initial Conditions

The value of each state variable at the initial time must be specified. The initial values are entered as a DATA statement and can appear anywhere after the specification statements in a program unit. In Table A-1, the initial conditions of the state variables are listed in line 130. The definition of the state variables used in program GENR are listed in Table A-2.

Parameters

The parameters used in this program define a specific generator and voltage regulator and are representative of a 60 KVA IDG system. The parameters are entered in DATA statements in SUBROUTINES DEQ and MAT.

The inductances of the generator are entered as DATA statements in SUBROUTINE MAT. In Table A-1c, these statements are listed in lines 1050 through 1080. The definition of the inductance parameters are:

XLAO - Constant part of armature self inductance

XLA2 - Variable part of armature self inductance

TABLE A-1a

LISTING OF PROGRAM GENR

```
      PROGRAM GENR(OUTPUT,TAPE6=OUTPUT)
      DIMENSION R1(20),R2(20),R3(20),R4(20),Y1(20)
      COMMON/SVAR/T,Y(20),YD(20),XL(144),XLD(144),XLI(144),M,N,L
      DATA(Y(I),I=1,10)/0 ,0 ,0 ,16 ,0 ,0 ,0 ,0 ,0 ,0 /
      DATA M,N,L,K2,K4/10,6,36,40,10/
      DATA T,DT/0 ,.000025/
      CALL MAT
      CALL INVERT (XL,XLI,N,N,N)
      DO 100 K1=1,K2
C     WRITE STATEMENTS
      T1=1000 *T
      WRITE(6,900)T1,(Y(I),I=1,6)
      DO 100 K3=1,K4
      CALL DEQ
      DO 10 J=1,M
      R1(J)=YD(J)*DT
      Y1(J)=Y(J)
   10 Y(J)=Y1(J)+ 5*R1(J)
      T=T+ 5*DT
      CALL MAT
      CALL INVERT (XL,XLI,N,N,N)
      CALL DEQ
      DO 20 J=1,M
      R2(J)=YD(J)*DT
   20 Y(J)=Y1 J)+ 5*R2(J)
      CALL DEQ
      DO 30 J=1,M
      R3(J)=YD(J)*DT
   30 Y(J)=Y1(J)+R3(J)
      T=T+ 5*DT
      CALL MAT
      CALL INVERT (XL,XLI,N,N,N)
      CALL DEQ
      DO 40 J=1,M
      R4(J)=YD(J)*DT
   40 Y(J)=Y1(J)+(R1(J)+2 *R2(J)+2 *R3(J)+R4(J))/6
  100 CONTINUE
  900 FORMAT(F10 3,6F10 0)
  190 END
```

TABLE A-1b

LISTING OF PROGRAM GENR SUBROUTINE DEQ

```
490-        SUBROUTINE DEQ
500-        DIMENSION R(144),B(12),V(12),XLT(144)
510-        COMMON/SVAR/T,Y(20),YD(20),XL(144),XLD(144),XLI(144),M,N,L
520-        COMMON/SX/XLL
530-C       VOLTAGE REGULATOR PARAMETERS
540-        DATA B4,C,VREF/2 463,2)0 52,1 0/
550-        DATA AMGAIN,B1,B2/100 ,90 ,100./
560-        DATA C1,C2,C3/87 93,658 2,1188 6/
570-C       ELEMENTS OF THE R MATRIX
580-        DATA RA,RD,RF,RL/ 02, 3,100 , 75/
590-        R(1)=R(N+2)=R(2*N+3)=RA+RL
600-        R(4*N+5)=R(5*N+6)=RD
610-        R(3*N+4)=RE
620-C             PERFORM THE OPERATION [XLT]=-[XLD]-[R]
630-        DO 50 J=1,L
640-        XLT(J)=-XLD(J)-R(J)
650-50      CONTINUE
660-C       PERFORM THE OPERATION YD=[XLI] [XLD][Y] +[V]
670-        D=0 0
680-        DO 200 J=1,N
690-        DO 100 I=1,N
700-100     D=D+XLT(J+N*(I-1))*Y(I)
710-        V(4)=100 *~~Y(15)~~ Y(9)
720-        ~~V(4)=1000~~
730-        B(J) = D+V(J)
740-        D=0 0
750-200     CONTINUE
760-        D=0 0
770-        DO 400 J=1,N
780-        DO 300 I=1,N
790-300     D=D+XLI(J+N*(I-1))*B(I)
800-        YD(J)=D
810-        D=0 0
820-400     CONTINUE
830-C             VOLTAGE REGULATOR EQUATIONS
840-        VA=RL*Y(1)+XLL*YD(1)
850-        VB=RL*Y(2)+XLL*YD(2)
860-        VC=RL*Y(3)+XLL*YD(3)
870-          VR=VC
880-          IF(VA GT VB AND VA GT VC)THEN
890-          VR=VA
900-          ELSE IF(VB GT VC)THEN
910-          VR=VB
920-          END IF
930-        YD(7)=-C*Y(7)+B4*VR
940-        YD(8)=B1*AMGAIN*(VREF-Y(7))-B2*Y(8)
950-        YD(9)=Y(10)
960-        YD(10)=-C1*Y(10)-C2*Y(9)+C3*(AMGAIN*(VREF-Y(7))-Y(8))
970-        RETURN
980-        END
```

TABLE A-1c

LISTING OF PROGRAM GENR SUBROUTINE MAT

```
990-        SUBROUTINE MAT
1000-       COMMON/SVAR/T,Y(20),YD(20),XL(144),XLD(144),XLI(144),M,N,L
1010-C            CONSTANT ELEMENTS OF THE [L] MATRIX
1020-       COMMON/SX/XLL
1030-       DATA XLL/ 000229/
1040-C            GENERATOR PARAMETERS
1050-       DATA XLAO,XLA2,XLABO,XLF/ 0003557, 0001752, 0001679, 1765/
1060-       DATA XLDO,XLQ,XMO,XMQ/ 0005, 0005, 00025, 00025/
1070-       DATA XMFO,XMFD/ 00761, 00025/
1080-       DATA THDOT/2513 2741/
1090-       THETA=THDOT*T
1100-       XL(1)=XLAO+XLA2*COS(2 *THETA)+XLL
1110-       XL(2)=-XLABO-XLA2*COS(2 *(THETA+ 5235))
1120-       XL(N+1)=XL(2)
1130-       XL(3)=-XLABO-XLA2*COS(2 *(THETA+2 6178))
1140-       XL(2*N+1)=XL(3)
1150-       XL(4)=-XMFO*COS(THETA)
1160-       XL(3*N+1)=XL(4)
1170-       XL(5)=-XMO*COS(THETA)
1180-       XL(4*N+1)=XL(5)
1190-       XL(6)=XMQ*SIN(THETA)
1200-       XL(5*N+1)=XL(6)
1210-       XL(N+2)=XLAO+XLA2*COS(2 *(THETA-2 0943))+XLL
1220-       XL(N+3)=-XLABO-XLA2*COS(2 *(THETA-1 5706))
1230-       XL(2*N+2)=XL(N+3)
1240-       XL(N+4)=-XMFO*COS(THETA-2 0943)
1250-       XL(3*N+2)=XL(N+4)
1260-       XL(N+5)=-XMO*COS(THETA-2 0943)
1270-       XL(4*N+2)=XL(N+5)
1280-       XL(N+6)=XMQ*SIN(THETA-2 0943)
1290-       XL(5*N+2)=XL(N+6)
1300-       XL(2*N+3)=XLAO+XLA2*COS(2 *(THETA+2 0943))+XLL
1310-       XL(2*N+4)=-XMFO*COS(THETA+2 0943)
1320-       XL(3*N+3)=XL(2*N+4)
1330-       XL(2*N+5)=-XMO*COS(THETA+2 0943)
1340-       XL(4*N+3)=XL(2*N+5)
1350-       XL(2*N+6)=XMQ*SIN(THETA+2 0943)
1360-       XL(5*N+3)=XL(2*N+6)
1370-       XL(3*N+4)=XLF
1380-       XL(3*N+5)=XMFD
1390-       XL(4*N+4)=XL(3*N+5)
1400-       XL(4*N+5)=XLDO
1410-       XL(5*N+6)=XLQ
1420-C      XLD MATRIX
1430-       XLD(1)=-2 *XLA2*THDOT*SIN(2 *THETA)
1440-       XLD(2)=2 *XLA2*THDOT*SIN(2 *(THETA+ 5235))
1450-       XLD(N+1)=XLD(2)
1460-       XLD(3)=2 *XLA2*THDOT*SIN(2 *(THETA+2 6178))
1470-       XLD(2*N+1)=XLD(3)
1480-       XLD(4)=XMFO*THDOT*SIN(THETA)
1490-       XLD(3*N+1)=XLD(4)
1500-       XLD(5)=XMO*THDOT*SIN(THETA)
1520-       XLD(6)=XMQ*THDOT*COS(THETA)
1530-       XLD(5*N+1)=XLD(6)
1540-       XLD(N+2)=-2 *XLA2*THDOT*SIN(2 *(THETA-2 0943))
1550-       XLD(N+3)=XLA2*2 *THDOT*SIN(2 *(THETA-1 5706))
1560-       XLD(2*N+2)=XLD(N+3)
1570-       XLD(N+4)=XMFO*THDOT*SIN(THETA-2 0943)
1580-       XLD(3*N+2)=XLD(N+4)
1590-       XLD(N+5)=XMO*THDOT*SIN(THETA-2 0943)
1600-       XLD(4*N+2)=XLD(N+5)
1610-       XLD(N+6)=XMQ*THDOT*COS(THETA-2 0943)
1620-       XLD(5*N+2)=XLD(N+6)
1630-       XLD(2*N+3)=-2 *XLA2*THDOT*SIN(2 *(THETA+2 0943))
1640-       XLD(2*N+4)=XMFO*THDOT*SIN(THETA+2 0943)
1650-       XLD(3*N+3)=XLD(2*N+4)
1660-       XLD(2*N+5)=XMO*THDOT*SIN(THETA+2 0943)
1670-       XLD(4*N+3)=XLD(2*N+5)
1680-       XLD(2*N+6)=XMQ*THDOT*COS(THETA+2 0943)
1690-       XLD(5*N+3)=XLD(2*N+6)
1700-       RETURN
1710-       END
```

TABLE A-1d

LISTING OF PROGRAM GENR SUBROUTINE INVERT

```
      SUBROUTINE INVERT(A,R,N,NDA,NDR)
C  INVERTS A MATRIX.
C  CALL INVERT(A,R,N,NDA,NDR,IPRINT,NAME)
C      WHERE -    A - INPUT MATRIX
C                 R - INVERSE OF A
C                 N - ORDER OF MARTICES A AND R
C               NDA - DIMENSIONED ROW SIZE OF MATRIX A
C               NDR - DIMENSIONED ROW SIZE OF MATRIX R
C    PRINT OPTION - IF IPRINT=0,NO PRINT OUT
C                   IF IPRINT≠0,PRINT OUT
C                   NAME-TITLE TO BE PRINTED ABOVE MATRIX(MAX OF
C                        10 CHARACTERS)
C
C         WHEN INVERT IS CALLED, NAME IS PRECEDED BY NH WHERE
C         N = NO  OF CHARACTERS IN NAME.
C         FOR EXAMPLE,
C         CALL INVERT(A,D,2,2,2,1,1HD)
C
C                SUBROUTINES REQUIRED -
C                       (1) PAGE
C                       (2) PRENT
C
C  IF A AND R ARE DIMENSIONED AS VECTORS, THEN NDA = NDR = N
C  LIMITATIONS- MAXIMUM SIZE OF INPUT MATRIX IS 100 X 100
C  PROGRAM STOPS AND A MESSAGE IS PRINTED IF AN ILL-CONDITIONED MATRIX
C  IS DISCOVERED
      DIMENSION A(NDA,1),R(NDR,1),L(100),M(100)
    1 FORMAT(///,8X,48H*************************************************,
     116H****************,/,8X,1H*,62X,1H*,/,8X,20H*  INVERT SUBROUTINE,
     244H MAY HAVE FOUND AN ILL-CONDITIONED MATRIX  *,/,8X,1H*,62X,1H*,/
     3,8X,58H*********************************************************,
     46H******,///)
      DO 3 J=1,N
      DO 3 K=1,N
    3 R(K,J) = A(K,J)
      DO 61  K=1,N
      L(K) = K
      M(K) = K
      PIV = R(K,K)
      DO 19  J=K,N
      DO 19  I=K,N
      IF (ABS(PIV) - ABS(R(I,J))) 16,19,19
   16 PIV = R(I,J)
      L(K) = I
      M(K) = J
   19 CONTINUE
      TEST = 1.0E-30
      IF (ABS(PIV)-TEST) 20,20,21
   20 WRITE (6,1)
```

TABLE A-1d

LISTING OF PROGRAM GENR SUBROUTINE INVERT (CONTINUED)

```
2210-    21 J = L(K)
2220-       IF (J-K)  29,29,22
2230-   22  DO 28 I = 1,N
2240-       FLAC = -R(K,I)
2250-       R(K,I) = R(J,I)
2260-   28  R(J,I) = FLAC
2270-    29 I = M(K)
2280-       IF (I-K)  38,38,31
2290-   31  DO 37 J = 1,N
2300-       FLAC = -R(J,K)
2310-       R(J,K) = R(J,I)
2320-   37  R(J,I) = FLAC
2330-    38 DO 42  I=1,N
2340-       IF (I-K)  40,42,40
2350-   40  R(I,K) = R(I,K) / (-PIV)
2360-    42 CONTINUE
2370-       DO 53  I=1,N
2380-       FLAC = R(I,K)
2390-       DO 53  J=1,N
2400-       DUM = R(I,J)
2410-       IF (I-K)  50,53,50
2420-    50 IF (J-K)  51,53,51
2430-   51  R(I,J) = (FLAC*R(K,J))  + DUM
2440-    53 CONTINUE
2450-       DO 59  J=1,N
2460-       IF (J-K)  58,59,58
2470-   58  R(K,J) = R(K,J) / PIV
2480-    59 CONTINUE
2490-       R(K,K) = 1.0/PIV
2500-    61 CONTINUE
2510-       K = N
2520-    63 K = K - 1
2530-       IF (K)  85,85,65
2540-    65 I = L(K)
2550-       IF (I-K)  75,75,67
2560-   67  DO 74 J = 1,N
2570-       FLAC = R(J,K)
2580-       R(J,K) = -R(J,I)
2590-   74  R(J,I) = FLAC
2600-    75 J = M(K)
2610-       IF (J-K)  83,83,77
2620-   77  DO 83 I = 1,N
2630-       FLAC = R(K,I)
2640-       R(K,I) = -R(J,I)
2650-   83  R(J,I) = FLAC
2660-       GO TO 63
2670-    85 CONTINUE
2680-C  85 IF(IPRINT)1138,1139,1138
2690-C1138 CALL PAGE
2700-C      CALL PRENT(6,R,N,N,NDR,0,NAME)
2710-C1139 RETURN
2720-       RETURN
2730-       END
```

TABLE A-2

DEFINITION OF STATE VARIABLES USED IN PROGRAM GENR

GENERATOR STATES

PHASE A ARMATURE CURRENT	Y(1)
PHASE B ARMATURE CURRENT	Y(2)
PHASE C ARMATURE CURRENT	Y(3)
FIELD CURRENT	Y(4)
DIRECT AXIS DAMPER CURRENT	Y(5)
QUAD AXIS DAMPER CURRENT	Y(6)

VOLTAGE REGULATOR STATES

RECTIFIER FILTER OUTPUT	Y(7)
COMPENSATION OUTPUT	Y(8)
EXCITER MODEL OUTPUT	Y(9)
EXCITER MODEL RATES	Y(10)

XLABO - Constant part of armature mutual inductance

XLF - Field self inductance

XMFO - Armature-field mutual inductance

XLDD, XLQ - Damper self inductance

XMD, XMQ - Damper - Mutual inductance

XMFD - Damper - field mutual inductance

THDOT - Angular velocity of generator, rad/sec

The resistances of the generator are entered as DATA statement in SUBROUTINE DEQ. This statement is on line 580 in Table A-1b. The definition of the parameters are:

RA - Armature Resistance

R_D - Resistance of Damper Coils

R_F - Resistance of Field Coil

R_L - Load Resistance

The inductance of the load is entered as a DATA statement in line 1030. The nominal rated load is .75 ohms. The value of XLL listed in line 1030, is .000229 ohms and gives a lagging power factor of .8 if the generator angular velocity is 2513 rad/sec (400 Hz).

The parameters that define the voltage regulator portion of the system are entered as DATA statements in line 530 through 550. These parameters may be identified by referring to Figure A-1 in which a block diagram of the voltage regulator is shown and to Table A-3 which is a list of the voltage regulator parameters.

Control Parameters

The control parameters are associated with the size of the problem and the number of integration steps that are desired. These parameters are defined in Table A-4. The number of state variables is defined by the parameter M. For Program GENR, this variable has a nominal value of 10. The following arrays

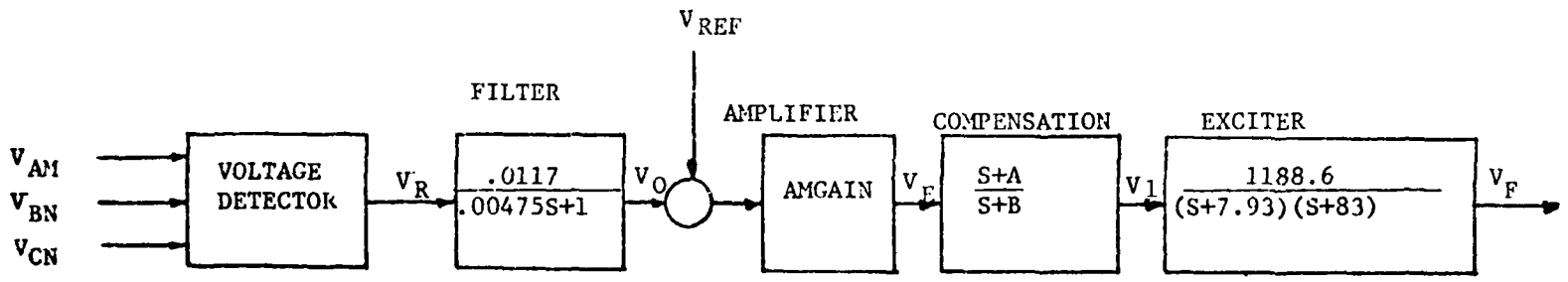

FIGURE A-1

VOLTAGE REGULATOR BLOCK DIAGRAM

TABLE A-3

Definition of Voltage Regulator Parameters

Parameter	Definition
B4	Filter Constant
C	Filter Pole
AMGAIN	Amplifier Gain
B2	Pole of Compensation Network
B2-B1	Lead Term of Compensation Network
C1	Damping Term of Exciter
C2	Denominator Constant of Exciter
C3	Numerator Constant of Exciter
VREF	Reference Voltage

TABLE A-4

Definition of Control Parameters

M - Number of State Variables

N - Number of State Variables Associated with Generator

L - NXN

K2 - Number of Print Cycles

K4 - Number of Integration Steps Between Print Cycles

T - Time

DT - Integration Step Size

must have a dimension that is equal to or greater than M: R1, R2, R3, R4, Y1, Y, and YD. The nominal value of the number of states associated with the generator, N, is six. The dimension of arrays B and V must have a value that is equal to or greater than N. The parameter L is the square of N. The dimension of the arrays R, XL, XLI, XLD, XLT, must be equal to or greater than L.

The number of integration steps is specified by the parameter DT. Trial runs were made for Program GENR in which DT was varied. The objective was to make DT as large as possible and not effect the accuracy of the result. The accuracy was judged to be unaffected when a change in DT did not produce a change from the results obtained from a smaller step size. It was found that a value of DT of .000025 seconds gives results that are accurate to three decimal places. The initial value of time, T, is specified in the DATA statement on line 150. This value is nominally zero.

The output is controlled by the WRITE statement shown on line 210 of Table A-1a. In the listing shown, the WRITE statement specifies that the variable T1, defined on line 200, and the first six state variables are to be printed. The FORMAT statement on line 420, specifies that the variable T1 be placed in a field length of ten and three decimals printed. The first six state variables are placed in field length of ten and zero decimals are printed. The number of times that a line of data is printed is controlled by the parameter K2. In the listing shown in Table A-1a on line 140, the parameter K2 is forty. Therefore, the program output will consist of forty lines of the values of T1, Y(1), Y(2), Y(3), Y(4), Y(5), and Y(6). The number of integration steps between printouts is specified by the parameter K4. On line 140, K4 is specified to be 10. With a DT of .000025 seconds, this means that a printout will occur for increments of .25 milliseconds. The steps required to enter data for Program GENR are summarized in Table A-5.

TABLE A-5

STEPS REQUIRED FOR ENTERING DATA IN PROGRAM GENR

STEP	ACTIVITY	SET PARAMETERS	PROGRAM LINE NO.
1	Establish initial conditions	Y(I)	130
2	Determine number of states	M	140
3	Determine number of states associated with generator	N	140
4	Set L = NXN	L	140
5	Number of print cycles	K2	140
6	Number of steps between print cycles	K4	140
7	Initial time	T	150
8	Integration step size	DT	150
9	Voltage regulator parameters	B4, C, VREF, AMGAIN, B1, B2, C1, C2, C3	540-560
10	Resistances	RA, RD, RF, RL	580
11	Inductances	XLL, XLAO, XLA2, XLABO, XLF, XLDD, XMD, XMQ, XMFO, XMFD, XLL	1030-1070
12	Shaft speed	THDOT	1090

Sample run results of program GENR is shown in Table A-6. The first column listed time increments in milliseconds. The next three columns list the armature currents in phases A, B, and C. The fourth column lists the field current. The last two columns list the currents in the damper coils. This listing is according to the WRITE statement on line 210 of the program. The control variables and parameters are the same as listed in Table A-1a except K2 was 20.

If another output listing is desired, the PRINT statement on line 210 can be changed. The number of lines of solution data is controlled by K2 and K4.

Voltage Regulator

The voltage regulator feedback is introduced in line 710 of the program. In the program listing of Table A-1b, an additional equation is introduced in line 720 to bypass the voltage regulator by sending a fixed voltage to the field circuit. To run the simulation with voltage regulation, line 720 should be deleted.

TABLE A-6

SAMPLE RESULT OF PROGRAM GENR

```
RUN,FTN5
   T1          IA          IB          IC          IF          ID          IG
 0 000          0           0           0          16           0           0
   250        -66         157        -109          19          20         110
   500        -176        109         -59          21          57         123
   750        -242        152          58          22          72         103
 1 000        -231         52         157          23          75          76
 1 250        -155        -51         203          23          72          42
 1 500         -51       -125         184          21          58          13
 1 750          50       -158         119          20          43          -2
 2 000         121       -142          26          19          32          -9
 2 250         145        -81         -61          18          24         -16
 2 500         120          2        -119          18          18         -15
 2 750          55         80        -131          17          13         -15
 3 000         -24        125         -98          17          10         -15
 3 250         -90        123         -28          17           7         -16
 3 500        -120         79          47          16           5         -16
 3 750        -104          8         102          16           2         -15
 4 000         -49        -64         118          16          -0         -13
 4 250          24       -109          88          16          -1         -10
 4 500          87       -110          24          16          -2          -7
 4 750         117        -67         -49          16          -1          -5
   57500 CM STORAGE USED
   1 015 CP SECONDS COMPILATION TIME
CM LWA+1 = 137158, LOADER USED  304000
   END  GENR
   16000 MAXIMUM EXECUTION FL
   7 026 CP SECONDS EXECUTION TIME
```

Program GENRDIS

Model Description

This program contains a model for a three phase salient pole generator with damper windings. A voltage regulator adjusts the field current according to the average of the three phase terminal voltages. This program has the same elements as program GENR with the addition of a distribution system. Each phase has a load comprised of a circuit containing three parallel loads. Each load consists of a resistance in series with an inductance. A listing of program GENRDIS is shown in Table A-7. In this listing, each load element has the same value. Different values may be entered if desired. The program contains a matrix inversion algorithm called Subroutine INVERT. A listing of this subroutine is shown in Tables A-7a through A-7c. The values shown in the listing of Table A-7 are representative of a 60 KVA generator operating into a load of 1.0 PU. The definition of the state variables employed in program GENRDIS are listed in Table A-8.

Input Data

Initial Conditions

The value of each state variable at the initial time must be specified. The initial values are entered as a data statement in line 150 of the program. The definition of the state variables are listed in Table A-8.

Parameters

The parameters used in this program define a specific generator, voltage regulator and distribution system, and are entered in Subroutine DEQ and MAT.

The inductance of the generator are entered in lines 1270-1290 of Subroutine MAT. The definition of the inductance parameters are as follows:

XLAO - Constant part of armature self inductance

XLA2 - Variable part of armature self inductance

XLARO - Variable part of armature mutual inductance

XLF - Field self inductance

XMFO - Armature-Field mutual inductance

XLDD-XLQ - Damper self inductance

XMD-XMQ - Damper - armature mutual inductance

XMFD - Damper - field mutual inductance

The angular velocity of the shaft, THDOT, is entered as a data statement in line 1300.

The resistances of the generator are entered as DATA statements in Subroutine DEQ in line 610-620. The definition of the resistance parameters are:

RA - Armature resistance

R_O - Damper resistance

R_F - Field resistance

The parameters that define the voltage regulator portion of the system are entered as DATA statements in Subroutine DEQ in lines 560-580. The definition of the voltage regulator parameters are:

B4 - Filter constant

C - Filter pole

AMGAIN - Amplifier gain

B2 - Pole of compensation network

B2-B1 - Lead term of compensation network

C1 - Damping term of exciter

C2 - Denominator constant of exciter

C3 - Numerator constant of exciter

VREF - Reference voltage

TABLE A-7a

LISTING OF PROGRAM GENRDIS

```
L,100,CJ

      PROGRAM GENRDIS(OUTPUT,TAPE6=OUTPUT)
      DIMENSION R1(20),R2(20),R3(20),R4(20),Y1(20)
      COMMON/SVAR/T,Y(20),YD(20),XL(144),XLD(144),XLI(144),M,N,L
      COMMON/SX/XLL,T1,VA,VB,VC,VR,VREF,AMGAIN
      COMMON/SY/XL11,XL21,XL31,XLP1,XLP2
      DATA(Y(I),I=1,16)/0.,0.,0.,16.,0.,0.,0.,0.,0.,0.,0.,0.,
     10.,0.,16.,0./
      DATA M,N,L,K2,K4/16,12,144,40,10/
      DATA T,DT/0.,.000025/
      CALL MAT
      CALL INVERT (XL,XLI,N,N,N)
      DO 100 K1=1,K2
C     WRITE STATEMENTS
      T1=1000.*T
      WRITE(6,999)T1,Y(1),VA,Y(4)
      DO 100 K3=1,K4
      CALL DEQ
      DO 10 J=1,M
      R1(J)=YD(J)*DT
      Y1(J)=Y(J)
   10 Y(J)=Y1(J)+.5*R1(J)
      T=T+.5*DT
      CALL DEQ
      DO 20 J=1,M
      R2(J)=YD(J)*DT
   20 Y(J)=Y1(J)+.5*R2(J)
      CALL DEQ
      DO 30 J=1,M
      R3(J)=YD(J)*DT
   30 Y(J)=Y1(J)+R3(J)
      T=T+.5*DT
      CALL MAT
      CALL INVERT (XL,XLI,N,N,N)
      CALL DEQ
      DO 40 J=1,M
      R4(J)=YD(J)*DT
   40 Y(J)=Y1(J)+(R1(J)+2.*R2(J)+2.*R3(J)+R4(J))/6.
  100 CONTINUE
  999 FORMAT(4F10.3)
      END
      SUBROUTINE DEQ
```

TABLE A-7b

LISTING OF PROGRAM GENRDIS SUBROUTINE DEQ

```
.1090
      SUBROUTINE DEQ
      DIMENSION R(144),B(12),V(12),XLT(144)
      COMMON/SVAR/T,Y(20),YD(20),XL(144),XLD(144),XLI(144),M,N,L
      COMMON/SX/XLL,T1,VA,VB,VC,VR,VREF,AMCAIN
      COMMON/Y/XL11,XL21,XL31,XLP1,XLP2
C     VOLTAGE REGULATOR PARAMETERS
      DATA B4,C,VREF/2.463,210.52,1.0/
      DATA AMCAIN,B1,B2/500,90,100/
      DATA C1,C2,C3/87.93,658.2,1188.6/
C     ELEMENTS OF THE R MATRIX
      DATA RP1,RP15,RP2,RP5/2.31,1.539,.915,4.62/
      DATA RA,RB,RC/3*.02/ Rc
      DATA RF/1.21/                                  2.51
      R11=R12=R13=R21=R22=R23=R31=R32=R33=RP1
      R(1)=R11+RA
      R(7)=R(7*N+1)=-R11
      R(6*N+7)=R11+R12
      R(9*N+7)=R(6*N+10)=-R12
      R(7*N+8)=R21+R22
      R(N+8)=R(7*N+2)=-R21
      R(10*N+8)=R(7*N+11)=-R22
      R(2*N+9)=R(6*N+3)=-R31
      R(8*N+9)=R31+R32
      R(11*N+9)=R(8*N+12)=-R32
      R(9*N+10)=R12+R13
      R(10*N+11)=R22+R23
      R(11*N+12)=R32+R33
      R(N+2)=R21+RB
      R(2*N+3)=R31+RC
      R(3*N+4)=RF
          IF(T.GT.0.1)THEN
           RP1=RP2
           XLP1=XLP2
          END IF
C         PERFORM THE OPERATION [XLT]=-[XLD]+[R]
      DO 50 J=1,L
      XLT(J)=-XLD(J)-R(J)
50    CONTINUE
C     PERFORM THE OPERATION YD=[XLI] [XLD][Y] +[V]
      D=0.0
      DO 200 J=1,N
      DO 100 I=1,N
100   D=D+XLT(J+N*(I-1))*Y(I)
      V(4)=100.*Y(15)
      B(J) = D+V(J)
      D=0.0
200   CONTINUE
      D=0.0
      DO 400 J=1,N
      DO 300 I=1,N
300   D=D+XLI(J+N*(I-1))*B(I)
      YD(J)=D
      D=0.0
400   CONTINUE
C           VOLTAGE REGULATOR EQUATIONS
      VA=R11*(Y(1)-Y(7))+XL11*(YD(1)-YD(7))
      VB=R21*(Y(2)-Y(8))+XL21*(YD(2)-YD(8))
      VC=R31*(Y(3)-Y(9))+XL31*(YD(3)-YD(9))
        VR=VC
        IF(VA.GT.VB.AND.VA.GT.VC)THEN
        VR=VA
        ELSE IF(VB.GT.VC)THEN
        VR=VB
        END IF
      YD(13)=-C*Y(13)+B4*VR
      YD(14)=B1*AMCAIN*(VREF-Y(13))-B2*Y(14)
      YD(15)=Y(18)
      YD(16)=-C1*Y(16)-C2*Y(15)+C3*(AMCAIN*(VREF-Y(13))-Y(14))
      RETURN
      END
```

TABLE A-7c

LISTING OF PROGRAM GENRDIS SUBROUTINE MAT

```
      SUBROUTINE MAT
      COMMON/SYMR/T,Y(20),YD(20),XL(144),XLD(144),XLI(144),M,N,L
C          CONSTANT ELEMENTS OF THE [L] MATRIX
      COMMON/SX/XLL,T1,VA,VB,VC,VR,VREF,AMGAIN
      COMMON/SY/XL11,XL21,XL31,XLP1,XLP2
      DATA XLL/ 0/
C          GENERATOR PARAMETERS
      DATA XLA0,XLA2,XLA00,XLF/ 0003557, 0001752, 0001670,.1705/
      DATA XLDD,XLQ,XMD,XMQ/ 0005, 0005,.0, 0/
      DATA XMFD,XMFQ/ 00761, 0/
      DATA THDOT/2513 2741/
      DATA XLP1,XLP15,XLP2,XLP5/ 000887, 000456, 000342,.001374/
      XL11=XL12=XL13=XL21=XL22=XL23=XL31=XL32=XL33=XLP1 ,000687
      THETA=THDOT*T
      XL(7)=XL(6*N+1)=-XL11
      XL(7*N+2)=XL(N+8)=-XL21
      XL(8*N+3)=XL(2*N+9)=-XL31
      XL(9*N+7)=XL(6*N+10)=-XL12
      XL(8*N+7)=XL11+XL12
      XL(7*N+8)=XL21+XL22
      XL(10*N+8)=XL(7*N+11)=-XL22
      XL(8*N+9)=XL31+XL32
      XL(11*N+9)=XL(8*N+12)=-XL32
      XL(9*N+10)=XL12+XL13
      XL(10*N+11)=XL22+XL23
      XL(11*N+12)=XL32+XL33
      XL(1)=XLA0+XLA2*COS(2 *THETA)+XL11
      XL(2)=-XLA00-XLA2*COS(2.*(THETA+ 5235))
      XL(N+1)=XL(2)
      XL(3)=-XLA00-XLA2*COS(2 *(THETA+2 6178))
      XL(2*N+1)=XL(3)
      XL(4)=-XMFO*COS(THETA)
      XL(3*N+1)=XL(4)
      XL(5)=-XMQ*COS(THETA)
      XL(4*N+1)=XL(5)
      XL(6)=-XMQ*SIN(THETA)
      XL(5*N+1)=XL(6)
      XL(N+2)=XLA0+XLA2*COS(2 *(THETA-2 0943))+XL21
      XL(N+3)=-XLA00-XLA2*COS(2 *(THETA-1 5706))
      XL(2*N+2)=XL(N+3)
      XL(N+4)=-XMFO*COS(THETA-2 0943)
      XL(3*N+2)=XL(N+4)
      XL(N+5)=-XMQ*COS(THETA-2 0943)
      XL(4*N+2)=XL(N+5)
      XL(N+6)=XMQ*SIN(THETA-2 0943)
      XL(5*N+2)=XL(N+6)
      XL(2*N+3)=XLA0+XLA2*COS(2.*(THETA+2 0943))+XL31
      XL(2*N+4)=-XMFO*COS(THETA+2 0943)
      XL(3*N+3)=XL(2*N+4)
      XL(2*N+5)=-XMQ*COS(THETA+2 0943)
      XL(4*N+3)=XL(2*N+5)
```

TABLE A-7c

LISTING OF PROGRAM GENRDIS SUBROUTINE MAT (CONTINUED)

```
[illegible]
[illegible]-      XL(2*N+6)=XMQ*SIN(THETA+2 0943)
[illegible]-      XL(5*N+3)=XL(2*N+6)
[illegible]-      XL(3*N+4)=XLF
[illegible]-      XL(5*N+5)=XMQ
[illegible]-      XL(4*N+4)=XL(3*N+5)
[illegible]-      XL(4*N+5)=XLDD
[illegible]-      XL(5*N+6)=XLQ
[illegible]-C     XLD XMATRIX
[illegible]-      XLD(1)=-2 *XLA2*THDOT*SIN(2 *THETA)
[illegible]-      XLD(2)=2 *XLA2*THDOT*SIN(2 *(THETA+ 5235))
[illegible]-      XLD(N+1)=XLD(2)
[illegible]-      XLD(3)=2 *XLA2*THDOT*SIN(2 *(THETA+2 0178))
[illegible]-      XLD(2*N+1)=XLD(3)
[illegible]-      XLD(4)=XMQ*THDOT*SIN(THETA)
[illegible]-      XLD(3*N+1)=XLD(4)
[illegible]-      XLD(5)=XMQ*THDOT*SIN(THETA)
[illegible]-      XLD(4*N+1)=XLD(5)
[illegible]-      XLD(6)=XMQ*THDOT*COS(THETA)
[illegible]-      XLD(5*N+1)=XLD(6)
[illegible]-      XLD(N+2)=-2 *XLA2*THDOT*SIN(2 *(THETA-2 0943))
[illegible]-      XLD(N+3)=XLA2*2 *THDOT*SIN(2 *(THETA-1 5708))
[illegible]-      XLD(2*N+2)=XLD(N+3)
[illegible]-      XLD(N+4)=XMQ*THDOT*SIN(THETA-2 0943)
[illegible]-      XLD(3*N+2)=XLD(N+4)
[illegible]-      XLD(N+5)=XMQ*THDOT*SIN(THETA-2 0943)
[illegible]-      XLD(4*N+2)=XLD(N+5)
[illegible]-      XLD(N+6)=XMQ*THDOT*COS(THETA-2 0943)
[illegible]-      XLD(5*N+2)=XLD(N+6)
[illegible]-      XLD(2*N+3)=-2 *XLA2*THDOT*SIN(2 *(THETA+2 0943))
[illegible]-      XLD(2*N+4)=XMQ*THDOT*SIN(THETA+2 0943)
[illegible]-      XLD(2*N+3)=XLD(2*N+4)
[illegible]-      XLD(2*N+5)=XMQ*THDOT*SIN(THETA+2 0943)
[illegible]-      XLD(4*N+3)=XLD(2*N+5)
[illegible]-      XLD(2*N+6)=XMQ*THDOT*COS(THETA+2 0943)
[illegible]-      XLD(5*N+3)=XLD(2*N+6)
[illegible]-      RETURN
[illegible]-      END
[illegible]-      SUBROUTINE INVERT(A,R,N,NDA,NDR)
```

TABLE A-8

Definition of State Variables Used in Program GENRDIS

PHASE A ARMATURE CURRENT	Y(1)
PHASE B ARMATURE CURRENT	Y(2)
PHASE C ARMATURE CURRENT	Y(3)
FIELD CURRENT	Y(4)
DIRECT AXIS DAMPER CURRENT	Y(5)
QUAD AXIS DAMPER CURRENT	Y(6)
FIRST BRANCH CURRENT IN PHASE A LOAD	Y(7)
FIRST BRANCH CURRENT IN PHASE B LOAD	Y(8)
FIRST BRANCH CURRENT IN PHASE C LOAD	Y(9)
SECOND BRANCH CURRENT IN PHASE A LOAD	Y(10)
SECOND BRANCH CURRENT IN PHASE B LOAD	Y(11)
SECOND BRANCH CURRENT IN PHASE C LOAD	Y(12)
VOLTAGE REGULATOR - RECTIFIER FILTER OUTPUT	Y(13)
VOLTAGE REGULATOR - COMPENSATION OUTPUT	Y(14)
VOLTAGE REGULATOR - EXCITER MODEL RATE	Y(15)
VOLTAGE REGULATOR - EXCITER MODEL OUTPUT	Y(16)

Distribution System Parameters

A schematic of the model of the distribution system is shown in Figure A-2. The resistors are identified by two subscripts. The first subscript identifies the phase. One for phase A, two for phase B and three for phase C. The second subscript refers to the position of the element in the circuit. The inductance elements are identified in the same manner. The values of the resistors are entered in Subroutine DEQ in line 630 of the program. In the program listing, shown in Table A-7b, all resistors have a value of 2.31 ohms. The values of the inductances are entered in Subroutine MAT in line 1320. In the program listing, shown in Table A-7c, all inductances have a value of .000687 henries.

Control Parameters

The control parameters are associated with the size of the problem and the number of integration steps that are desired. These parameters are defined in Table A-9. The number of state variables is defined by the parameter M. For Program GENRDIS, this variable has a nominal value of 16. The following arrays must have a dimension that is equal to or greater than M: R1, R2, R3, R4, Y1, Y, and YD. The nominal value of the number of states associated with the generator, N, is 12. The dimension of arrays B and V must have a value that is equal to or greater than N. The parameter L is the square of N. The dimension of the arrays R, XL, XLI, XLD, XLT, must be equal to or greater than L.

The number of integration steps is specified by the parameter DT. Trial runs were made for Program GENR in which DT was varied. The objective was to make DT as large as possible and not effect the accuracy of the result. The accuracy was judged to be unaffected when a change in DT did not produce a change from the results obtained from a smaller step size. It was found that a value of DT of .000025 seconds gives results that are accurate to three decimal places. The initial value of time, T, is specified in the DATA statement on line 180. This value is nominally zero.

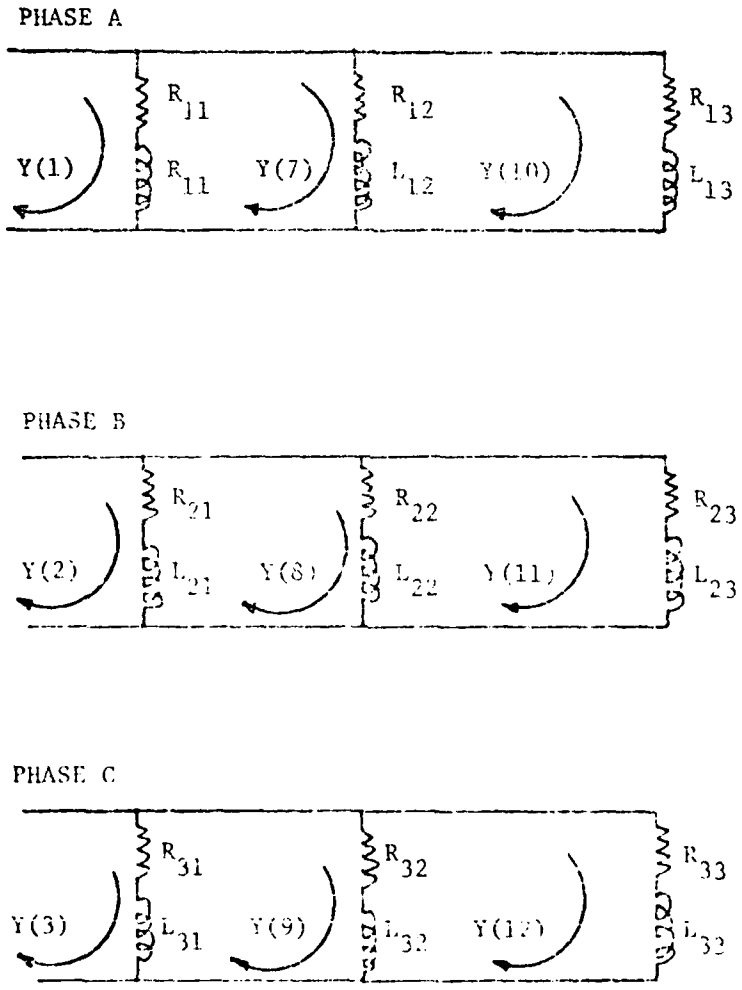

SCHEMATIC OF DISTRIBUTION SYSTEM

FIGURE A-2

TABLE A-9

Definition of Control Parameters

M - Number of State Variables

N - Number of State Variables Associated with Generator

L - NXN

K2 - Number of Print Cycles

K4 - Number of Integration Steps Between Print Cycles

T - Time

DT - Integration Step Size

The output is controlled by the WRITE statement shown on line 240 of Table A-7a. In the listing shown, the WRITE statement specifies that the variable T1, defined on line 230, Y(1), VA, and Y(4) are to be printed. The FORMAT statement on line 480, specifies that the variable T1 be placed in a field length of ten and three decimals are to be printed. The variables Y(1), VA, and Y(4) are also to be placed in a field length of ten and three decimals are to be printed. The number of times that a line of data is printed is controlled by the parameter K2. In the listing shown in Table A-7a on line 170, the parameter K2 is forty. Therefore, the program output will consist of forty lines of the values of T1, Y(1), VA, and Y(4). The number of integration steps between printouts is specified by the parameter K4. On line 170, K4 is specified to be 10. With a DT of .000025 seconds, this means that a printout will occur for increments of .25 milliseconds. The steps required to enter data for Program GENRDIS are summarized in Table A-10.

The result of a sample run of program GENRDIS is shown in Table A-11. The first column lists the time in milliseconds. The next three columns list Y(1), VA, and Y(4).

TABLE A-10

STEPS REQUIRED FOR ENTERING DATA INTO PROGRAM GENRDIS

STEP	ACTIVITY	SET PARAMETERS	PROGRAM LINE NO.
1	Establish initial conditions	Y(I)	150-160
2	Determine number of states	M	170
3	Number of states associated with generator	N	170
4	Set L = NXN		170
5	Number of print cycles	K2	170
6	Number of steps between print cycles	K4	170
7	Initial time	T	180
8	Integration step size	DT	180
9	Voltage regulator parameters	B4, C, VREF, AMGAIN B1, B2, C1, C2, C3	560-580
10	Resistances	R1, RA, RB, RC, RF	600-620
11	Inductances	XLL, XLAO, XLA2, XLABO, XLF, XLDD, XLQ, XMD, XMQ, XMFO, XMFD, XLP1	1250-1310
12	Speeds	THDOT	1300

TABLE A-11

SAMPLE RESULT OF PROGRAM GENRDIS

```
RUN 3 TIME

   57073 CM STORAGE USED
   2.300 CP SECONDS COMPILATION TIME.
CM LWA+1 = 141733, LOADER USED  307008
 0 000       0 000       0 000     10 000
   250     -42 005    -104 813     18 049
   500    -131 894    -182 360     21.307
   750    -201 856    -191 477     23 318
 1 000    -211 159    -137 906     23 592
 1 250    -159 408     -51 537     22 653
 1 500     -70 197      38 091     21 199
 1 750      25 200     100 262     19 751
 2 000      98 617     124 581     18 596
 2 250     129 454     103 031     17 853
 2 500     109 945      43 250     17 514
 2 750      48 486     -32 763     17 447
 3 000     -31 441     -95 334     17 485
 3 250     -99 551    -123 619     17 524
 3 500    -130 219    -104 375     17 564
 3 750    -111 681     -45 313     17.652
 4 000     -50 479      31 586     17 780
 4 250      30 479      97 115     17 900
 4 500     100 558     120 338     17 906
 4 750     133 086     107 680     18.073
 5 000     114 898      47 199     18.218
 5 250      52 142     -32 568     18 409
 5 500     -31 729    -100 864     18 583
 5 750    -104 679    -131 594     18 709
 6 000    -138 566    -112 184     18 820
 6 250    -119 656     -49 289     18 976
 6 500     -54 223      34 028     19 167
 6 750      33 112     105 107     19 332
 7 000     106 895     136 702     19 440
 7 250     143 884     116 241     19 528
 7 500     123 602      50 602     19 658
 7 750      55 999     -35 443     19 822
 8 000     -34 359    -109 641     19 956
 8 250    -112 410    -140 795     20 028
 8 500    -140 113    -119 293     20 078
 8 750    -127 275     -51 505     20 169
 9 000     -57 243      30 502     20 293
 9 250      35 303     111 128     20 385
 9 500     114 810     143 425     20 411
 9 750     150 793     121 021     20 414
   END  GENRDIS
   10273 MAXIMUM EXECUTION FL.
  42 343 CP SECONDS EXECUTION TIME
```

PROGRAM PARGEN

Model Description

This program contains a model of two electrical power generating systems operating in parallel. Each electrical system is comprised of a three phase, salient pole generator and voltage regulator. A simplified model of a CSD is included with each generator. The CSD controls the generator shaft speed in the presence of engine speed variations and electrical load disturbances. The CSD receives a feedback signal that is proportional to the real power generated. A voltage regulator achieves control by adjusting the field current. The voltage regulator receives feedback signals that are proportional to the terminal voltage and the generated reactive power. A listing of program PARGEN is shown in Table A-12. The electrical load in each phase is modeled as a single resistance and inductance. The program is written in FORTRAN V.

Input Data

The value of each state variable at the initial time must be specified. The initial values are entered as a DATA statement. In Table A-12, the initial conditions of the state variables are listed in line 180. The definition of the state variables are listed in Table A-13.

Parameters

The parameters that are used in this program define a specific electrical power generating system. The parameters that appear in the program listing in Figure A.15 were obtained from Sundstrand and are representative of two 60 KVA aircraft systems operating in parallel. The parameters are entered as DATA statements in Subroutines DEQ and MAT. The listing shows only the first four lines of the subroutine INVERT. The complete listing of subroutine INVERT is included in program GENR, Table A-1.

AD-A099 894 VOUGHT CORP DALLAS TX F/G 10/2
POWER SYSTEM CONTROL STUDY. PHASE I. INTEGRATED CONTROL TECHNIQ--ETC(U)
MAR 81 D E LAUTNER, A J MAREK, J R PERKINS F33615-78-C-2018
UNCLASSIFIED AFWAL-TR-80-2129 NL

5 OF 5
AD
A 099894

END
DATE
FILMED
7 81
DTIC

TABLE A-12

LISTING OF PROGRAM PARGEN

```
100=      PROGRAM MAIN(OUTPUT,TAPE6=OUTPUT)
110=C         PFN=PARGEN200,ID=SELLERS
120=      DIMENSION R1(35),R2(35),R3(35),R4(35),Y1(35)
130=      COMMON/SVAR/Y(35),YD(35),XL(324),XLD(324),XLI(324),M,N,L,T
140=      COMMON/SM/TOR,TOR1,TOR2
150=      COMMON/SV/VA,VB,VC,VR
160=      DATA M,N,L,K2,K4/22,8,64,40,50/
170=      DATA T,DT/0.0,.000025/
180=      DATA(Y(I),I=1,22)/0.,0.,0.,6.,0.,0.,0.,6.
190=     1,.53,56.,6.,177.,.53,56.,6.,177.,2513.,0.,2513.,0.,0.,0./
200=      CALL MAT
210=      CALL INVERT(XL,XLI,N,N,N)
220=      DO 100 K1=1,K2
230=      T1=T*1000.
240=C     WRITE STATEMENTS
250=      WRITE(6,999)T1,Y(1),Y(4),VR,Y(9),Y(17),Y(11),Y(19)
260=      DO 200 K3=1,K4
270=      CALL DEQ
280=      DO 10 J=1,M
290=      R1(J)=YD(J)*DT
300=      Y1(J)=Y(J)
310=      Y(J)=Y1(J)+.5*R1(J)
320=10    CONTINUE
330=      T=T+.5*DT
340=      CALL DEQ
350=      DO 20 J=1,M
360=      R2(J)=YD(J)*DT
370=      Y(J)=Y1(J)+.5*R2(J)
380=20    CONTINUE
390=      CALL DEQ
400=      DO 30 J=1,M
410=      R3(J)=YD(J)*DT
420=      Y(J)=Y1(J)+R3(J)
430=30    CONTINUE
440=      T=T+.5*DT
450=      CALL MAT
460=      CALL INVERT(XL,XLI,N,N,N)
470=      CALL DEQ
480=      DO 40 J=1,M
490=      R4(J)=YD(J)*DT
500=      Y(J)=Y1(J)+(R1(J)+2.*R2(J)+2.*R3(J)+R4(J))/6.
510=40    CONTINUE
520=200   CONTINUE
530=100   CONTINUE
540=999   FORMAT(8F10.2)
550=      END
560=      SUBROUTINE DEQ
570=      COMMON/SVAR/Y(35),YD(35),XL(324),XLD(324),XLI(324),M,N,L,T
580=      COMMON/SM/TOR,TOR1,TOR2
590=      COMMON/SV/VA,VB,VC,VR
600=      COMMON/SX/XL11,XL12,XL13
610=      DIMENSION R(324),XLT(324),B(35),V(35)
620=      DATA AJ,OMR,RK,SG/3.57,2513.,.00942,14./
630=      DATA RD/.0043/
640=      DATA RF,RI/100.,.02/
650=      DATA RA,RB,RC/3*.75/
660=      R(1)=R(N+2)=R(2*N+3)=R(4*N+5)=R(5*N+6)=R(6*N+7)=RA+RI
670=      R(3*N+4)=R(7*N+8)=RF
680=      R(5)=R(4*N+1)=RA
690=      R(N+6)=R(5*N+2)=RB
700=      R(2*N+7)=R(6*N+3)=RC
710=      DO 50 J=1,L
720=      XLT(J)=-(R(J)+XLD(J))
730=50    CONTINUE
```

TABLE A-12 (CONTINUED)

```
      D=0.0
      DO 200 J=1,N
      DO 100 I=1,N
      LI=J+N*(I-1)
      D=D+XLT(L1)*Y(I)
100   CONTINUE
      V(4)=100.*Y(11)
      V(8)=100.*Y(15)
      B(J)=D+V(J)
      D=0.0
200   CONTINUE
      D=0.0
      DO 400 J=1,N
      DO 300 I=1,N
      L1= J+N*(I-1)
      D=D+XLI(L1)*B(I)
300   CONTINUE
      YD(J)=D
      D=0.0
400   CONTINUE
C     VOLTAGE REGULATOR EQUATIONS
      DATA C1,C2,C3/87.93,658.2,1188.6/
      DATA B4,C,AMGAIN,B1,B2,VREF/2.46,210.5,101.0,90.0,100.0,1.0/
      VA=R(5)*(Y(1)+Y(5))+XL11*(YD(1)+YD(5))
      VB=R(N+6)*(Y(2)+Y(6))+XL12*(YD(2)+YD(6))
      VC=R(2*N+7)*(Y(3)+Y(7))+XL13*(YD(3)+YD(7))
      VR=VC
      IF(VA.GT.VB.AND.VA.GT.VC)THEN
      VR=VA
      ELSE IF(VB.GT.VC)THEN
      VR=VB
      END IF
C  POWER MEASUREMENTS
      PREAL=VA*(Y(1)-Y(5))
      VA1=VA/OMR
      PREAC=VA1*(YD(1)-YD(5))
C  POWER MEASUREMENT FILTER
      YD(21)=100.*(PREAL-Y(21))
      YD(22)=100.*(PREAC-Y(22))
      OMR1=OMR+RK*Y(21)
      OMR2=OMR-RK*Y(21)
      VREF1=VREF+RQ*Y(22)
      VREF2=VREF-RQ*Y(22)
      YD(9)=-C*Y(9)+VR*B4
      YD(10)=B1*AMGAIN*(VREF-Y(9))-B2*Y(10)
      YD(11)=Y(12)
      YD(12)=-C1*Y(12)-C2*Y(11)+C3*(AMGAIN*(VREF-Y(9))-Y(10))
      YD(13)=-C*Y(13)+VR*B4
      YD(14)=B1*AMGAIN*(VREF-Y(13))-B2*Y(14)
      YD(15)=Y(16)
      YD(16)=-C1*Y(16)-C2*Y(15)+C3*(AMGAIN *(VREF-Y(13))-Y(14))
C     SPEED CONTROL LOOP
      TOR1=TOR1+100.
      YD(17)=AJ*(TOR1+(OMR1-Y(17))*88)
      YD(18)=Y(17)
      YD(19)=AJ*(TOR2+(OMR2-Y(19))*88)
      YD(20)=Y(19)
      RETURN
      END
      SUBROUTINE MAT
      COMMON/SVAR/Y(35),YD(35),XL(324),XLD(324),XLI(324),M,N,L,T
      COMMON/SM/TOR,TOR1,TOR2
      COMMON/SX/XL11,XL12,XL13
      DIMENSION X(36),A(6)
      DATA XLAO,XLA2,XLABO,XLF,XKF0/.0003537,.000172,.0001679
     1,.1765,.00761/
```

TABLE A-12 (CONTINUED)

```
      DATA XL11,XL12,XL13/3*.000229/
      DATA NN/4/
      KK=0
      DO 10 ISTEW=1,2
      KK=KK+1
      IF(KK.EQ.1)THEN
      LL=0
      THETA=Y(18)
      THDOT=Y(17)
      ELSE
      LL=4
      THETA=Y(20)
      THDOT=Y(19)
      END IF
C     XL MATRIX
      XL(1)=XLA0+XLA2*COS(2.*THETA)
      XL(1)=XL(1)+XL11
      XL(2)=-XLABO-XLA2*COS(2.*(THETA+.5235))
      XL(N+1)=XL(2)
      XL(3)=-XLABO-XLA2*COS(2.*(THETA+2.6178))
      XL(2*N+1)=XL(3)
      XL(4)=XMF0*COS(THETA)
      XL(3*N+1)=XL(4)
      XL(N+2)=XLA0+XLA2*COS(2.*(THETA-2.0943))
      XL(N+2)=XL(N+2)+XL12
      XL(N+3)=-XLABO-XLA2*COS(2.*(THETA-1.5706))
      XL(2*N+2)=XL(N+3)
      XL(N+4)=XMF0*COS(THETA-2.0943)
      XL(3*N+2)=XL(N+4)
      XL(2*N+3)=XLA0+XLA2*COS(2.*(THETA+2.0943))
      XL(2*N+3)=XL(2*N+3)+XL13
      XL(2*N+4)=XMF0*COS(THETA+2.0943)
      XL(3*N+3)=XL(2*N+4)
      XL(3*N+4)=XLF
C     XLD MATRIX
      XLD(1)=-2.*XLA2*THDOT*SIN(2.*THETA)
      XLD(2)=2.*XLA2*THDOT*SIN(2.*(THETA+.5235))
      XLD(N+1)=XL(2)
      XLD(3)=2.*XLA2*THDOT*SIN(2.*(THETA+2.6178))
      XLD(2*N+1)=XLD(3)
      XLD(4)=-XMF0*THDOT*SIN(THETA)
      XLD(3*N+1)=XLD(4)
      XLD(N+2)=-2.*XLA2*THDOT*SIN(2.*(THETA-2.0943))
      XLD(N+3)=2.*XLA2*THDOT*SIN(2.*(THETA-1.5706))
      XLD(2*N+2)=XLD(N+3)
      XLD(N+4)=-XMF0*THDOT*SIN(THETA-2.0943)
      XLD(3*N+2)=XLD(N+4)
      XLD(2*N+3)=-2.*XLA2*THDOT*SIN(2.*(THETA+2.0943))
      XLD(2*N+4)=-XMF0*THDOT*SIN(THETA+2.0943)
      XLD(3*N+3)=XLD(2*N+4)
      IF(KK.EQ.2) THEN
C     REARRANGE  ELEMENTS OF GEN NO. 2
      DO 7  J=1,NN
      DO 7  I=1,NN
      L1=I+N*(J-1)
      L2=I+4+N*(J+3)
      XL(L2)=XL(L1)
      XLD(L2)=XLD(L1)
 7    CONTINUE
      END IF
      XL(5)=XL(4*N+1)=XL11
      XL(N+6)=XL(5*N+2)=XL12
      XL(2*N+7)=XL(6*N+3)=XL13
C  CALCULATION OF SHAFT TORQUE.
      X(1)=-XLA2*SIN(2*THETA)
```

TABLE A-12 (CONTINUED)

```
 2050=        X(2)=2.*XLA2*SIN(2.*(THETA+.5235))
 2060=        X(3)=2.*XLA2*SIN(2.*(THETA+2.6178))
 2070=        X(4)=-XMFO*SIN(THETA)
 2080=        X(6)=-XLA2*SIN(2.*(THETA-2.0943))
 2090=        X(7)=2.*XLA2*SIN(2.*(THETA-1.5706))
 2100=        X(8)=-XMFO*SIN(THETA-2.0942)
 2110=        X(11)=-XLA2*SIN(2.*(THETA+2.0943))
 2120=        X(12)=-XMFO*SIN(THETA+2.0942)
 2130=        D=0.0
 2140=        DO 200 J=1,NN
 2150=        DO 100 I=1,NN
 2160=        D=D+X(J+N*(I-1))*Y(I+LL)
 2170= 100    CONTINUE
 2180=        A(J)=D
 2190=        D=0.0
 2200= 200    CONTINUE
 2210=        TOR=0.
 2220=        DO 300 I=1,NN
 2230=        TOR=TOR+A(I)*Y(I+LL)
 2240=300     CONTINUE
 2250=C       CONVERT NEW-MET. TO IN-LBS.
 2260=        TOR=8.85*TOR
 2270=        IF(KK.EQ.1)THEN
 2280=        TOR1=TOR
 2290=        ELSE
 2300=        TOR2=TOR
 2310=        END IF
 2320= 10     CONTINUE
 2330=        RETURN
 2340=        END
 2350=C       SUBROUTINE INVERT(A,R,N,NDA,NDR,IPRINT,NAME)
 2360=        SUBROUTINE INA

 2360=        SUBROUTINE INVERT(A,R,N,NDA,NDR)
COMMAND ABORTED
..
```

TABLE A-13

Definition of State Variables Used in Program PARGEN

IA1	PHASE A ARMATURE CURRENT; GEN. #1	Y(1)
IB1	PHASE B ARMATURE CURRENT; GEN. #1	Y(2)
IC1	PHASE C ARMATURE CURRENT; GEN. #1	Y(3)
IF1	FIELD CURRENT; GEN. #1	Y(4)
IA2	PHASE A ARMATURE CURRENT; GEN. #2	Y(5)
IB2	PHASE B ARMATURE CURRENT; GEN. #2	Y(6)
IC2	PHASE C ARMATURE CURRENT; GEN. #2	Y(7)
IF2	FIELD CURRENT; GEN. #2	Y(8)
VO1	VOLTAGE REGULATOR; GEN. #1	Y(9)
VC1		Y(10)
IF1C		Y(11)
IFF1C		Y(12)
VO2	VOLTAGE REGULATOR; GEN. #2	Y(13)
VC2		Y(14)
IF2C		Y(15)
IFF2C		Y(16)
G1	ANGULAR VELOCITY OF GEN. #1 SHAFT	Y(17)
THETA1	ANGULAR POSITION OF GEN. #1 SHAFT	Y(18)
G2	ANGULAR VELOCITY OF GEN. #2 SHAFT	Y(19)
THETA2	ANGULAR POSITION OF GEN. #1 SHAFT	Y(20)
PREALO	REAL POWER FILTER	Y(21)
PREACO	REACTIVE POWER FILTER	Y(22)

The inductances of the generator are entered as DATA statements in Subroutine MAT. The definition of the inductance parameter are:

XLAO - Constant part of armature self inductance

XLA2 - Variable part of armature self inductance

XLABO - Constant part of armature mutual inductance

XLF - Field self inductance

XMFO - Variable part of field inductance

XL11, XL12, XL13 - Inductances of the load in phases A, B, and C

The inductances of the generator are entered in DATA statements in lines 1380, 1400.

The resistances are entered in DATA statements in Subroutine DEQ. These statements are in lines 640 and 650. The definition of the resistances are:

R_I - Armature coils

R_F - Field coil

RA, RB, RC - Load resistance of phases A, B, and C

The voltage regulator parameters are entered in DATA statements in Subroutine DEQ. The definitions of the voltage regulator parameters are:

Bd - Filter constant

C - Filter pole

AMGAIN - Amplifier gain

B2 - Pole of compensation network

B2-B1 - Lead term of compensation network

C1 - Damping term of exciter

C2 - Denominator constant of exciter

C3 - Numerator term of exciter

VREF - Reference voltage

The parameters for the simplified CSD are entered in DATA statements in Subroutine DEQ. The definitions of the CSD parameters are as follows:

AJ - Reciprocal of shaft inertia (1/J) inches, pounds, seconds

SG - Open loop gain, in-pounds/rad/sec

OMR - Reference frequency, rad/sec

The power feedback parameters are entered in DATA statements in Subroutine DEQ. The definition of these parameters are:

RK - Real power feedback gain

RQ - Reactive power feedback gain

Control Parameters

The control parameters are associated with the size of the problem and the number of integration steps that are desired. These parameters are defined in Table A-14. The number of state variables is defined by the parameter M. For program PARGEN, this variable has a nominal value of 22. The following arrays must have a dimension that is equal to or greater than M: R1, R2, R3, R4, Y1, Y, and YD. The nominal value of the number of states associated with the generator, N, is eight. The dimension of arrays B, X, and V must have a value that is equal to or greater than N. The parameter L is the square of N. The dimension of the arrays R, XL, XLI, XLD, XLT, must be equal to or greater than L.

The number of integration steps is specified by the parameter DT. Trial runs were made for program GENR in which DT was varied. The objective was to make DT as large as possible and not effect the accuracy of the result. The accuracy was judged to be unaffected when a change in DT did not produce a change from the results obtained from a smaller step size. It was found that a value of DT of .000025 seconds gives results that are accurate to three decimal places. The initial value of time, T, is specified in the DATA statement on line 160. This value is nominally zero.

TABLE A-14

Definition of Control Parameters

M - Number of State Variables

N - Number of State Variables Associated with Generator

L - NXN

K2 - Number of Print Cycles

K4 - Number of Integration Steps Between Print Cycles

T - Time

DT - Integration Step Size

The output is controlled by the WRITE statement shown in line 240 of Table A-12. In the listing shown, the WRITE statement specifies that the variable T1, defined on line 230 Y(1), Y(4), V_R, Y(4), Y(7), Y(11) and Y(19) are to be printed. The FORMAT statement on line 540, specifies that all variables be placed in a field length of ten and two decimals printed. The number of times that a line of data is printed is controlled by the parameter K2. In the listing shown in Table A-12 on line 160, the parameter K2 is forty. Therefore, the program output will consist of forty lines of the values of T1, Y(1), Y(4), and VA. The number of integration steps between printouts is specified by the parameter K4. On line 160, K4 is specified to be 10. With a DT of .000025 seconds, this means that a printout will occur for increments of .25 milliseconds. The steps required to enter data for program PARGEN are summarized in Table A-15.

The result of a sample run of program PARGEN is shown in Table A-16. The control variables and parameters are the same as those shown in Table A-12.

TABLE A-15

STEPS REQUIRED TO ENTER DATA FOR PROGRAM PARGEN

Step	Activity	Set Parameters	Program Line No.
1	Establish initial conditions	Y(I)	180
2	Determine number of states	M	160
3	Determine number of states associated with generators	N	160
4	Set L = NxN	L	160
5	Enter integration step size	DT	120
6	Enter print cycle	K2	160
7	Enter interations between print cycles	K4	160
8	Enter generator inertia	AO	620
9	Enter reference frequency	OMR	620
10	Enter real and reactive feedback gains	RK, RQ	620, 630
11	Enter CSD gain	SG	620
12	Enter generator resistances	RF, RI, RA, RB, RC	640, 650
13	Enter voltage regulator parameters	C1, C2, C3, B4, C, AMGAIN, B1, B2, VREF	950, 960
14	Enter generator inductances	XLAO, XLA2, XLABO, XLF, XMFD	1380
15	Enter load inductances	XL11, XL12, XL13	1400
16	Enter WRITE statement		250
17	Enter FORMAT statement		540

TABLE A-16

SAMPLE RUN - PROGRAM PARGEN

```
..RUN

   61200 CM STORAGE USED.
   2.349 CP SECONDS COMPILATION TIME.
 LOAD=1 # 163120, LOADER USED  33000B
   0.00      0.00      6.00      0.00      .53   2513.00      6.00   2513.00
   1.25     40.83      7.93     62.07      .62   2514.24      6.20   2513.02
   2.50    -34.15      7.10     71.67      .68   2515.40      6.34   2513.03
   3.75     33.29      6.93     53.14      .68   2516.49      6.43   2513.04
   5.00    -33.14      6.91     70.85      .72   2517.52      6.47   2513.05
   6.25     33.18      6.92     52.92      .71   2518.48      6.48   2513.06
   7.50    -33.17      6.92     70.86      .74   2519.39      6.46   2513.07
   8.75     33.04      6.88     52.73      .72   2520.24      6.40   2513.07
  10.00    -32.79      6.83     69.85      .75   2521.04      6.32   2513.08
  11.25     32.43      6.75     51.77      .73   2521.79      6.23   2513.09
  12.50    -31.98      6.65     67.97      .74   2522.49      6.12   2513.09
  13.75     31.46      6.54     50.21      .72   2523.15      6.01   2513.10
  15.00    -30.89      6.42     65.56      .73   2523.77      5.89   2513.10
  16.25     30.30      6.30     48.33      .71   2524.36      5.77   2513.11
  17.50    -29.69      6.17     62.97      .72   2524.90      5.65   2513.11
  18.75     29.09      6.04     46.37      .69   2525.42      5.53   2513.11
  20.00    -28.51      5.92     60.47      .70   2525.90      5.42   2513.12
  21.25     27.96      5.81     44.52      .67   2526.35      5.32   2513.12
  22.50    -27.45      5.70     58.27      .67   2526.78      5.23   2513.12
  23.75     26.98      5.61     42.93      .65   2527.18      5.16   2513.12
  25.00    -26.58      5.52     56.51      .65   2527.55      5.09   2513.12
  26.25     26.23      5.45     41.67      .62   2527.90      5.03   2513.12
  27.50    -25.95      5.39     55.26      .63   2528.23      4.99   2513.12
  28.75     25.72      5.34     40.80      .61   2528.54      4.96   2513.12
  30.00    -25.56      5.31     54.54      .61   2528.83      4.94   2513.12
  31.25     25.46      5.29     40.33      .59   2529.10      4.94   2513.12
  32.50    -25.41      5.28     54.31      .60   2529.36      4.94   2513.12
  33.75     25.42      5.28     40.21      .58   2529.60      4.95   2513.12
  35.00    -25.47      5.29     54.52      .59   2529.82      4.97   2513.12
  36.25     25.56      5.31     40.40      .58   2530.03      5.00   2513.12
  37.50    -25.70      5.34     55.07      .59   2530.23      5.03   2513.12
  38.75     25.86      5.37     40.82      .58   2530.42      5.07   2513.12
  40.00    -26.05      5.41     55.85      .59   2530.59      5.11   2513.12
  41.25     26.25      5.45     41.41      .58   2530.76      5.15   2513.12
  42.50    -26.47      5.50     56.78      .60   2530.91      5.19   2513.12
  43.75     26.70      5.55     42.08      .58   2531.05      5.24   2513.12
  45.00    -26.92      5.59     57.76      .60   2531.19      5.28   2513.12
  46.25     27.15      5.64     42.77      .59   2531.32      5.32   2513.12
  47.50    -27.37      5.68     58.70      .61   2531.44      5.36   2513.12
  48.75     27.58      5.73     43.42      .60   2531.55      5.40   2513.12
     END  MAIN
    20400 MAXIMUM EXECUTION FL.
   88.100 CP SECONDS EXECUTION TIME.
..S.*

..CATALOG.Y.PARGEN3008.ID=SELLERS,RP=999

..B.B

COMMAND- LOGOUT

CP      290.778 SEC.
PP       27.741 SEC.
CS       72.583 SEC.
CONNECT TIME    0 HRS.   42 MIN.
 10/10/80  LOGGED OUT AT 16.03.03.
      <
```

PROGRAM VSCF

Mcdel Description

This program contains a model for a Variable Frequency Constant Speed Generator. The VSCF is comprised of a six-phase salient pole generator and a cyclo-converter. The electrical load is modeled as a resistance and an inductance. A listing of program VSCF is shown in Table A-17. This program employs Subroutine INVERT to obtain the inversion of the inductance matrix. Table A-17 contains only the first few statements of Subroutine INVERT. A complete listing of INVERT is shown in Tables A-17a through A-17c. The program listing of VSCF that appears in Table A-17 contains representative values for the parameters and control variables. The program is written in FORTRAN V.

Input Data

Initial Conditions

The value of each state variable at the initial time must be specified. The initial values are entered as a DATA statement. In Table A-17a, the initial conditions of the state variables are listed in line 170.

Parameters

The parameters used in this program define a specific generator. The parameters include the inductances of the generator coils and their resistances. The parameters that appear in the program listing in Table A-17 were obtained from General Electric and are representative of a VSCF. The parameters are entered in DATA statements in SUBROUTINES DEQ and MAT.

The inductances of the generator are entered as DATA statements in SUBROUTINE MAT. In Table A-17c, these statements are listed in 1760-1780. The definition of the inductance parameters are:

TABLE A-17a

LISTING OF PROGRAM VSCF

```
100-        PROGRAM VSCF(OUTPUT,TAPE6=OUTPUT)
110-        DIMENSION R1(15),R2(15),R3(15),R4(15),Y1(15),XF(6)
120-        COMMON/SVAR/T,Y(15),YD(15),XL(49),XLD(49),XLI(49),S(30),M,N,L
130-        COMMON/SS/VC(15),XXM,NN,R(49)
140-        COMMON/SX/THETA,THDOT1,THDOT
150-        DATA M,N,L,K2,K4/9,7,49,40,10/
160-        DATA T,DT/0.0, 0000093333/
170-        DATA(Y(J),J=1,13)/13*0 0/
180-        DATA THDOT1,THDOT/2513 2741,7539 8224/
190-        DATA R(49),S(7),S(8)/1 1,0 0,-8333 /
200-        KK1=KK2=KK3=KK4=KK5=KK6=0
210-        NN=N-1
220-        Y(7)=134
230-        VC(7)=184
240-        DO 100 K1=1,K2
250-C       WRITE STATEMENTS
260-        WRITE(6,999)T1,(Y(I),I=1,6)
270-        T1=1000 *T
280-        DO 100 K4=1,K4
290-        CALL MAT
300-C       FIRING LOGIC
310-        XF(1)=-THETA+2 0544+6 2831*KK1
320-        XF(2)=-THETA+3 1416+6 2831*KK2
330-        XF(3)=-THETA+4 1088+6 2831*KK3
340-        XF(4)=-THETA+5 236+6 2831*KK4
350-        XF(5)=-THETA+6 2831*KK5
360-        XF(6)=-THETA+1 0472+6 2831*KK6
370-        TH1=THDOT1*T
380-        YY=SIN(TH1)
390-        XM=ASIN(YY)
400-        IF(XM GT XF(6) AND XM LT XF(1))THEN
410-C       STATE B
420-        NC=2
430-        KK6=KK6+1
440-        L3=4*N+5
450-        L4=5*N+5
460-        JJ1=5
470-        JJ2=6
480-        ELSE IF(XM GT.XF(1) AND XM LT XF(2))THEN
490-C       STATE C
500-        NC=3
510-        KK1=KK1+1
520-        L3=6
530-        L4=5*N+1
540-        JJ1=1
550-        JJ2=6
560-        ELSE IF(XM GT XF(2).AND.XM LT.XF(3))THEN
570-C       STATE D
580-        NC=4
590-        KK2=KK2+1
600-        L3=2
610-        L4=N+1
620-        JJ1=1
630-        JJ2=2
640-        ELSE IF(XM GT.XF(3).AND.XM LT.XF(4))THEN
650-C       STATE E
660-        NC=5
670-        KK3=KK3+1
680-        L3=N+3
690-        L4=2*N+2
700-        JJ1=2
710-        JJ2=3
720-        ELSE IF(XM.GT XF(4) AND XM.LT.XF(5))THEN
730-C       STATE F
740-        NC=6
750-        KK4=KK4+1
760-        L3=2*N+4
770-        L4=3*N+3
780-        JJ1=3
790-        JJ2=4
```

TABLE A-17a

LISTINF OF PROGRAM VSCF (CONTINUED)

```
800-        ELSE IF(XM.GT XF(5).AND.XM LT.XF(6))THEN
810-C       STATE A
820-        NC=1
830-        KK5=KK5+1
840-        L3=3*N+5
850-        L4=4*N+4
860-        JJ1=4
870-        JJ2=5
880-        END IF
890-        DO 51 J=1,NN
900-           IF(J EQ JJ1.OR.J.EQ.JJ2)THEN
910-           VC(J)=-Y(8)
920-           S(J)=8333.
930-           ELSE
940-           Y(J)=VC(J)=S(J)=0.0
950-           END IF
960-51      CONTINUE
970-        DO 52 J=1,6
980-           IF(J NE JJ1.AND J NE.JJ2)THEN
990-           DO 53 I=1,7
1000-          K=J+N*(I-1)
1010-             IF(J.NE.I)THEN
1020-             XL(K)=XLD(K)=0.0
1030-             END IF
1040-53        CONTINUE
1050-          END IF
1060-52     CONTINUE
1070-       XL(L3)=XL(L3)-XXM
1080-       XL(L4)=XL(L4)-XXM
1090-       CALL INVERT(XL,XLI,N,N,N)
1100-       CALL DEQ
1110-       DO 10 J=1,M
1120-       R1(J)=YD(J)*DT
1130-       Y1(J)=Y(J)
1140- 10    Y(J)=Y1(J)+.5*R1(J)
1150-       T=T+.5*DT
1160-       CALL DEQ
1170-       DO 20 J=1,M
1180-       R2(J)=YD(J)*DT
1190- 20    Y(J)=Y1(J)+.5*R2(J)
1200-       CALL DEQ
1210-       DO 30 J=1,M
1220-       R3(J)=YD(J)*DT
1230- 30    Y(J)=Y1(J)+R3(J)
1240-       T=T+.5*DT
1250-       CALL DEQ
1260-       DO 40 J=1,M
1270-       R4(J)=YD(J)*DT
1280- 40    Y(J)=Y1(J)+(R1(J)+2.*R2(J)+2.*R3(J)+R4(J))/6.
1290- 100   CONTINUE
1300-999    FORMAT(F10.4,6F10.0)
1310-       END
```

TABLE A-17b

LISTING OF PROGRAM VSCF SUBROUTINE DEQ

```
1320-        SUBROUTINE DEQ
1330-        COMMON/SVAR/T ,Y(15) ,YD(15) ,XL(49) ,XLD(49) ,XLI(49) ,S(30) ,M ,N ,L
1340-        COMMON/SS/VC(15) ,XXM ,NN ,R(49)
1350-        DIMENSION  XLT(49) ,B(10)
1360-        DATA RA ,XLAI/1 0 ,10000 /
1370-        IF(T GT  005)THEN
1380-        RA- 25
1390-        XLAI-2500
1400-        END IF
1410-C       MATRIX EQUATIONS
1420-        D-0 0
1430-        DO 10 J-1 ,L
1440-        XLT(J)=-(R(J)+XLD(J))
1450-10      CONTINUE
1460-        DO 30 J-1 ,N
1470-        DO 20 I-1 ,N
1480-        L1-J+N*(I-1)
1490-        D-D+XLT(L1)*Y(I)
1500-20      CONTINUE
1510-        B(J) -D+VC(J)
1520-        D-0 0
1530-30      CONTINUE
1540-        DO 50 J-1 ,N
1550-        DO 40 I-1 ,N
1560-        L1-J+N*(I-1)
1570-        D-D+XLI(L1)*B(I)
1580-40      CONTINUE
1590-        YD(J)-D
1600-        D-0 0
1610-50      CONTINUE
1620-C       VOLTAGE ACROSS FILTER CAPS
1630-        DO 60 I-1 ,8
1640-        D-D+S(I)*Y(I)
1650-60      CONTINUE
1660-        YD(8)-D
1670-        D-0 0
1680-C       LOAD CURRENT
1690-        YD(9)-(Y(8)-RA*Y(9))*XLAI
1700-        RETURN
1710-        END
```

TABLE A-17c

LISTING OF PROGRAM VSCF SUBROUTINE MAT

```
      SUBROUTINE MAT
      COMMON/SVAR/T,Y(15),YD(15),XL(49),XLD(49),XLI(49),S(30),M,N,L
      COMMON/SS/VC(15),XXM,NN,R(49)
      COMMON/SX/THETA,THDOT1,THDOT
      DATA XXA0,XXA2,XFLD,XFF,XXL,XXM/.000123,.0000250,-.0001,.000208,
     1 .00024,.0016/
      DATA XXAB0/.000058/
C     DEFINITION OF  L MATRIX
C     ARMATURE TERMS
      THETA=THDOT*T
      RNN=NN
      DO 10 I=1,N
      RI=I-1
      L1=I+N*(I-1)
      BETA=2.*(THETA-(6.2831*RI)/RNN)
      XL(L1)=XXA0+XXA2*COS(BETA)
      XLD(L1)=-2.*THDOT*XXA2*SIN(BETA)
10    CONTINUE
      DO 20 J=2,NN
      DO 20 I=2,J
      L1=J+N*(I-2)
      RI=I-2
      RJ=J-1
      BETA1=THETA-(6.2831*RI)/RNN
      BETA2=THETA-(6.2831*RJ)/RNN
      XL(L1)=XXAB0*COS(BETA1-BETA2)+XXA2*COS(BETA1-BETA2)
      XLD(L1)=-2.*THDOT*XXA2*SIN(BETA1+BETA2)
      L2=I-1+N*(J-1)
      XL(L2)=XL(L1)
      XLD(L2)=XLD(L1)
20    CONTINUE
C     FIELD TERMS
      DO 30 I=1,NN
      L1=N*I
      RI=I-1
      BETA1=THETA-(6.2831*RI)/RNN
      L2=NN*N+I
      XL(L1)=XFLD*COS(BETA1)
      XLD(L1)=-XFLD*THDOT*SIN(BETA1)
      XL(L2)=XL(L1)
      XLD(L2)=XLD(L1)
30    CONTINUE
C     REACTOR INDUCTANCE
      DO 40 I=1,NN
      L1=I+N*(I-1)
      XL(L1)=XL(L1)+XXL
40    CONTINUE
      XL(L)=XFF
      RETURN
      END
      SUBROUTINE INVERT(A,R,N,NDA,NDR)
CC  INVERTS A MATRIX.
CC  CALL INVERT(A,R,N,NDA,NDR,IPRINT,NAME)
CC     WHERE -   A - INPUT MATRIX
```

XXAO - Constant part of armature self inductance

XXA2 - Variable part of armature self inductance

XELD - Mutual inductance, field - armature

XFP - Self inductance of field

XXL - Self inductance of interphase reactor

XXM - Mutual inductance of interphase reactor

XXABO - Constant part of armature mutual inductance

The resistance and the inductance of the load are entered as a DATA statement in line 1360. The inductance is entered as the parameter XLAI which is actually the inverse of the inductance.

The generator speed is defined as the parameter THDOT and the 400 Hz reference frequency is defined as the parameter THDOT1. These parameters are entered as a DATA statement in line 190. The filter capacitor is defined as the element S(8) in the S matrix. The value entered is actually the inverse of the capacitance. The value is entered as a negative number in a DATA statement in line 170.

Control Parameters

The control parameters are associated with the size of the problem and the number of integration steps that are required. These parameters are defined in Table A-4. The number of state variables are defined by the parameter M. For program VSCF, this variable has a nominal value of 9. The parameter N is the number of states associated with the generator and has a value of 7 for the VSCF. The following arrays must have a value equal to or greater than M: R1, R2, R3, R4, Y1, Y, and YD. The dimension of the arrays XL, XLD, XLI, and R must be equal to or greater than L, which is NXN or 49. The dimension of S must be eight or more. The dimension of the arrays VC and B must be equal to or greater than N.

The number of integration steps is specified by the parameter DT. This parameter should be at least .01 of the period of the generator. For the program listed in Table A-17, the generator frequency is set at 7539 rad/sec. This results in a step size of .000008333 second to correspond to .01 of the period of the generator. If simulations are performed in which the generator frequency is significantly increased, the value of DT should be decreased accordingly.

The output is controlled by the WRITE statement shown in line 260 of Table A-17a. In the listing shown, the WRITE statement specifies that the variable T1, defined on line 270, and the first six state variables are to be printed. The FORMAT statement on line 1300, specifies that the variable T1 be placed in a field length of ten and three decimals be printed. The first six state variables are placed in field length of ten and zero decimals are printed. The number of times that a line of data is printed is controlled by the parameter K2. In the listing shown in Table A-17a on line 150, the parameter K2 is forty. Therefore, the program output consists of forty lines of the values of T1, Y(1), Y(2), Y(3), Y(4), Y(5), and Y(6). The number of integration steps between printouts is specified by the parameter K4. On line 150, K4 is specified to be 10. With a DT of .00000833, this means that a printout will occur in increments of .083 milliseconds. The result of a sample run of program VSCF is shown in Table A-18. In this listing, the first column contains increments of time in milliseconds. The next six columns list the armature currents in the six generator phases.

The steps required to enter data for program VSCF are summarized in Table A-19.

TABLE A-18

SAMPLE RESULT OF PROGRAM VSCF

```
RUN,FTN5

  0 0000        0.        0.        0.        0.        0.        0.
  0 0000        0.        0.        0.        4.        0.        0.
    0833        0.        0.        0.        0.        5.        2.
    1750        3.        0.        0.        0.        0.        8.
    2750        9.        4.        0.        0.        0.        0.
    3833        0.       13.        7.        0.        0.        0.
    5000        0.        0.       19.       10.        0.        0.
    6250        0.        0.        0.       24.       13.        0.
    7583        0.        0.        0.        0.       25.        7.
    9000        1.        0.        0.        0.        0.       17.
  1 0500        5.        0.        0.        0.        0.       30.
  1 2083       13.        1.        0.        0.        0.        0.
  1 3750        0.       -3.       -6.        0.        0.        0.
  1 5500        0.        0.      -18.       -5.        0.        0.
  1 7333        0.        0.        0.      -26.       -6.        0.
  1 9250       -3.        0.        0.        0.        0.      -12.
     61600 CM STORAGE USED
      1 891 CP SECONDS COMPILATION TIME
  CM LWA+1 = 13050B, LOADER USED  27500B
  2 1250        0.       -9.       -3.        0.        0.        0.
  2 3333        0.        0.        0.       -3.        0.        0.
  2 5500        2.        0.        0.        0.        0.        7.
  2 7750        0.       14.        8.        0.        0.        0.
  3 0083        0.        0.        0.       23.       13.        0.
  3 2500        0.        0.        0.        0.       37.       15.
  3 5000        5.        0.        0.        0.        0.        0.
  3 7583        0.       -3.       -4.        0.        0.        0.
  4 0250        0.        0.      -23.      -13.        0.        0.
  4 3000        0.        0.        0.        0.      -21.      -11.
  4 5833        0.      -10.       -6.        0.        0.        0.
  4 8750        0.        0.        0.        0.        4.        2.
  5 1750        0.       11.        6.        0.        0.        0.
  5 4833        0.        0.        0.       28.       16.        0.
  5 8000        5.        0.        0.        0.        0.       25.
  6 1250        0.       -3.       -0.        0.        0.        0.
  6 4583        0.        0.      -23.      -13.        0.        0.
  6 8000       -6.        0.        0.        0.        0.      -13.
  7 1500        0.        0.        0.       -5.        0.        0.
  7 5083        8.        3.        0.        0.        0.        0.
  7 8750        0.        0.        0.       23.       13.        0.
  8 2500        6.        0.        0.        0.        0.       26.
  8 6333        0.       -3.       -4.        0.        0.        0.
  9 0250        0.        0.        0.      -26.       -6.        0.
     END   VSCF
     15100 MAXIMUM EXECUTION FL
    37 365 CP SECONDS EXECUTION TIME
```

TABLE A-19

Steps Required for Entering Data in Program VSCF

STEP	ACTIVITY	SET PARAMETERS	PROGRAM LINE NO.
1	Establish initial conditions	Y(1)	170
2	Determine number of states	M	150
3	Determine number of states associated with generator	N	150
4	Set L = NXN	L	150
5	Number of print cycles	K2	150
6	Number of steps between print cycles	K4	150
7	Initial times	T	160
8	Integration step size	DT	160
9	Resistances	RA, R(49)	1360, 190
10	Inductances	XXAO, XXA2, XFLD, XFF, XXL, XXM, XXABO, XLAI	1360, 1760-1782
11	Filter capacitor	S(8) (1/C)	190
12	Speeds	THDOT, THDOT 1	180

APPENDIX B

SIMULATION RUNS OF DEVELOPED COMPUTER PROGRAMS

Appendix B - Simulation Runs

The capabilities of the programs developed under this contract are illustrated in this appendix. The results are presented in the form of time histories of dependent variables for various disturbances. A representative sampling of the type of simulation runs that can be performed with these programs include sensitivity studies with parameter variation, the transient response of the system due to disturbances, and the effect of inductive load on system response. The majority of the runs in this appendix simulate the operation of an IDG and a VSCF. Finally, a sample run of two IDGs operating in parallel is presented. A summary of the time histories is listed in Table B-1. The following paragraphs contain a brief description of the conditions and results for each run. Time histories of IDG operation are shown in Figures B-1 through B-12. Time histories of VSCF operation are shown in Figures B-13 through B-17. The response of an IDG system operating in parallel is shown in Figure B-18.

All of the IDG simulation runs were run with a generator at a fixed frequency of 400 Hz. The initial conditions were set to give a modest transient at time T equal to zero. The disturbance was entered at 20 milliseconds after the start of the run. This gave sufficient time for the initial transient to decay. The integration step size for all IDG runs was .000025 seconds and .00000833 seconds for all VSCF runs. The total run time for IDG runs was 60 milliseconds. The vertial axis is labeled OUTPUT. The name of the output for a particular run is labeled in the title. The vertical scale is in units of voltage or current. The results are presented in CAL22 format which would be an area of 11 x 17 inches if the plot were prepared on a drum plotter.

TABLE B-1

SUMMARY OF TIME HISTORIES

FIGURE	RL	XLL	AMGAIN	COMMENTS
B-1	.75-.375	0	500	IDG
B-2	.75-.375	.000229	500	
B-3	.75-.375	.000229	0	
B-4	.75-.375	.000229	750	
B-5	.75-1.5	.000229	750	
B-6	.75-.375	.000229	500	
B-7	.75-.1875	0	500	
B-8	.75-3.75	.000229-001145	100	
B-9	1.5	0	100	
B-10	.75	.000229	500-0	
B-11	.75	0	500	Phase A; .75-.375
B-12	.75	0	500	Phase A; .75-.02
B-13	1.0	.0001		VSCF
B-14	1.0	.0001		One-Half Amplitude
B-15	1.0	.0001		Constant Amplitude
B-16	1.0-.5	.000298-.000147		
B-17	1.0	.000298		Freq; 7500-8500
B-18	0.75	0	100	Parallel Operation

The response of the IDG to a balanced, step change in load is presented in Figure B-1. The terminal voltage and armature current in phase A are plotted vs. time. The voltage and currents in the other two phases are identical because of balanced conditions. The first few cycles show the turn-on transient. The first peak is the electrical transient due to the armature inductances and resistance. The longer period transient, which decays in about 12 milliseconds is due to the time constants of the voltage regulator. During this period, the load is 1.0 PU in all phases. At time, T, equal to 20 milliseconds, the load in all phases abruptly changes to 2.0 PU. The electrical transient shows a single peak followed by the response of the voltage regulator cicruit. The sudden increase in load causes the voltage to drop and the current to increase. The regulator action brings the voltage back to the original value and the current settles out at a higher value. For this run, the load had unity power factor. It may be seen that the voltage and current are in phase. The gain of the voltage regulator loop is set at 500.

The effect of a lagging PF is shown in Figure B-2. All other conditions are the same as the result shown in Figure B-1. The phase lag between the voltage and current is evident.

The response of the generator without voltage regulation is shown in Figure B-3. The load suddenly changes from 1.0 PU to 2.0 PU at 20 milliseconds after the start of the run. The voltage drops immediately after the load is applied and remains at the lower value. The load has a .8 lagging power factor.

The loop gain of the voltage regulator effects the response of the generator due to load changes. Figure B-4 shows a response to a load change applied 20 milliseconds after the start of the run. This run is to be compared with the run shown in Figure B-2. The response shown in Figure B-4,

with a voltage regulator gain, AMGAIN, of 750 has a slight longer voltage overshoot than the response with AMGAIN equal to 500. The time to reach the peak of the overshoot is less with AMGAIN of 750.

When the load is decreased from 1.0 PU to .5 PU, the voltage regulator loop is unstable with a value of AMGAIN set at 750. This result is shown in Figure B-5. Satisfactory performance can be obtained by lowering the value of AMGAIN. This case is shown in a later figure.

Alternate formats of presenting the results may be desirable. As an example, the results of Figure B-2 are presented in a different way in Figure B-6. This time the voltage and current of phase A are plotted on separate sheets. In addition, the field current is shown. The electrical transient that appears on the field current trace when the solution starts and when the electrical load change occurs is evident.

The response to a larger transient is shown in Figure B-7. At time of 20 milliseconds after start, the load in all three phases is changed from 1.0 per unit to 4.0 per unit. The general shape of the response is the same as Figure B-6. Note the scale for armature current in Figure B-7 is ten times the scale shown in Figure B-6.

In Figure B-8, the voltage regulator gain has been lowered to 100, to obtain a satisfactory transient response. The electrical load is initially set at 1.0 PU. At T equal to 20 milliseconds, the load is suddenly decreased to .2 PU. When the load changes, the voltage initially overshoots and the regulation brings the voltage back to initial value. This sequence is opposite to the sequence that occurs when the load is suddenly increased. The current drops to a smaller value after the load is decreased. The field current trace shows that the field current drops to support the lighter load.

Figure B-9 shows a run in which the load is held at a fixed value of .5 PU throughout the run. The voltage regulator gain for the run is set at 100. The lower gain results in a transient with a longer period. This shows up on the trace of field current.

Another application of simulation is illustrated in Figure B-10. The response of the system due to malfunctions can be readily demonstrated. Such tests can be difficult to reproduce under laboratory test conditions. The runs show the system response due to the sudden loss of voltage regulation. At a time of 20 milliseconds after the start of the run, the voltage regulator gain, AMGAIN, is set to zero. The field current decays to zero and the voltage and current drop accordingly.

The effect of unbalanced load changes are illustrated in Figure B-11. The run was set up with a 1.0 PU load applied to phase B and C throughout the run. At T equal to 20 milliseconds, the load in phase A was suddenly changed from 1.0 PU to 2.0 PU. The terminal voltage of phases A, B, and C are plotted in Figure B-11. The voltage in phase A increases with the larger load. There is some interaction between phases B and C due to the unbalanced condition.

A more dramatic test simulation involves the introduction of out of tolerance conditions that would not be practical to apply to an actual machine. The result of a short across the terminals of phase A is illustrated in Figure B-12 where the armature current in phase A, B, and C are plotted. The distortion in the waveforms due to the fault is evident.

The transient response of a VSCF differs from the IDG in two significant aspects. The VSCF response is much more rapid. The response is dominated by the inductance of the coils and there is nothing in the VSCF that corresponds to the voltage regulator response. The commutating action of the cyclo-converter introduces harmonic distortion that has no counterpart in the IDG.

The general nature of the VSCF waveforms is illustrated in Figure B-13. The generator frequency is 1200 Hz. A 1.0 PU load is held throughout the run. The armature currents from each phase are broken up into segments by the commutating action of the cyclo-converter. The segments of armature currents add up in the interphase transformer and filter. An inductive load is present

which shows up as a phase shift between the voltage and current. The field current has a significant 1200 Hz ripple and the mutual inductance between the armature and field coils.

The shape of the output is controlled by the reference wave. A sine wave of one-half amplitude is illustrated in Figure B-14. To illustrate that the cyclo-converter is able to reproduce a reference signal with arbitrary shape, a constant amplitude signal is shown in Figure B-15. The rise time of the output is .75 milliseconds. This indicates that the response of the VSCF due to transients will be on the order of .75 milliseconds.

The response due to a step change in load is shown in Figure B-16. At T equal to 5.0 millisecond, the load is suddenly changed from 1.0 PU to 2.0 PU. The armature current segments show little change in wave shape before and after the change in load. Referring to the voltage and current waves, it may be seen that the voltage wave remains unchanged and the current increases after the load is increased.

The response of the VSCF due to changing input frequency is shown in Figure B-17. The frequency is changed at a linear rate from 7500 to 8500 rad per second. This is a much faster rate than a practical case but was introduced to save computer run time. The output frequency, as observed on the voltage and current waves, remain a constant 400 Hz. This frequency change is evident on the ripple of the field current trace.

The IDG parallel operation response is shown in Figure B-18. A step change in mechanical torque is introduced to the CSD input of generator number 1. The magnitude of the step change is 1000 inch pounds. The difference in generator frequency resulting from the unbalanced torque is shown in Figure B-18a. The traces for output current from each generator (Figure B-18b) and the load voltage (Figure B-18c) shows no discernable differences resulting from the torque change. The reason is due to the stiffness of the power source and the small change in generator frequencies.

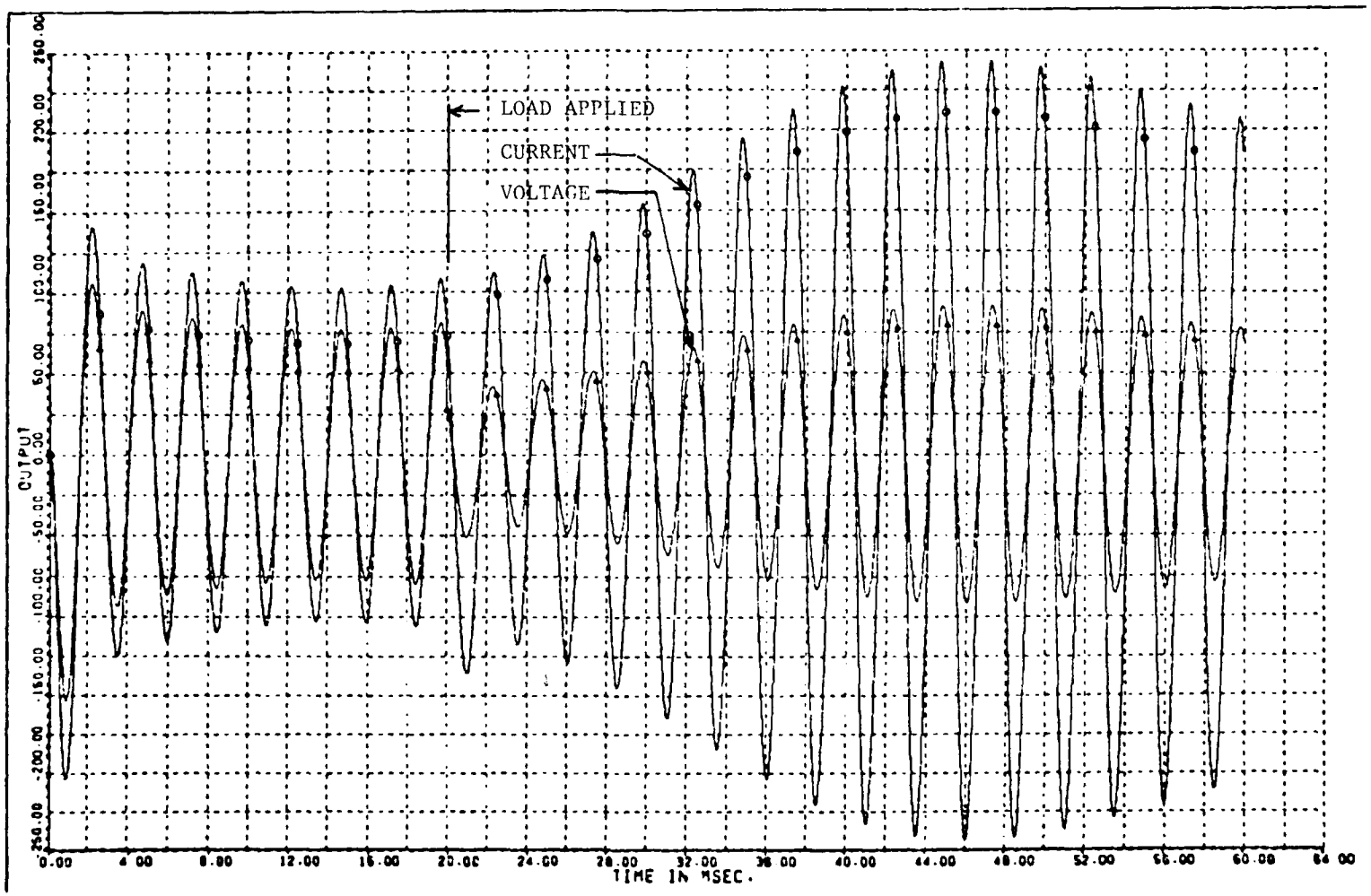

IDG SYSTEM

STEP LOAD CHANGE
1.0 PU TO 2.0 PU AT UNITY PF
AMGAIN = 500

FIGURE B-1

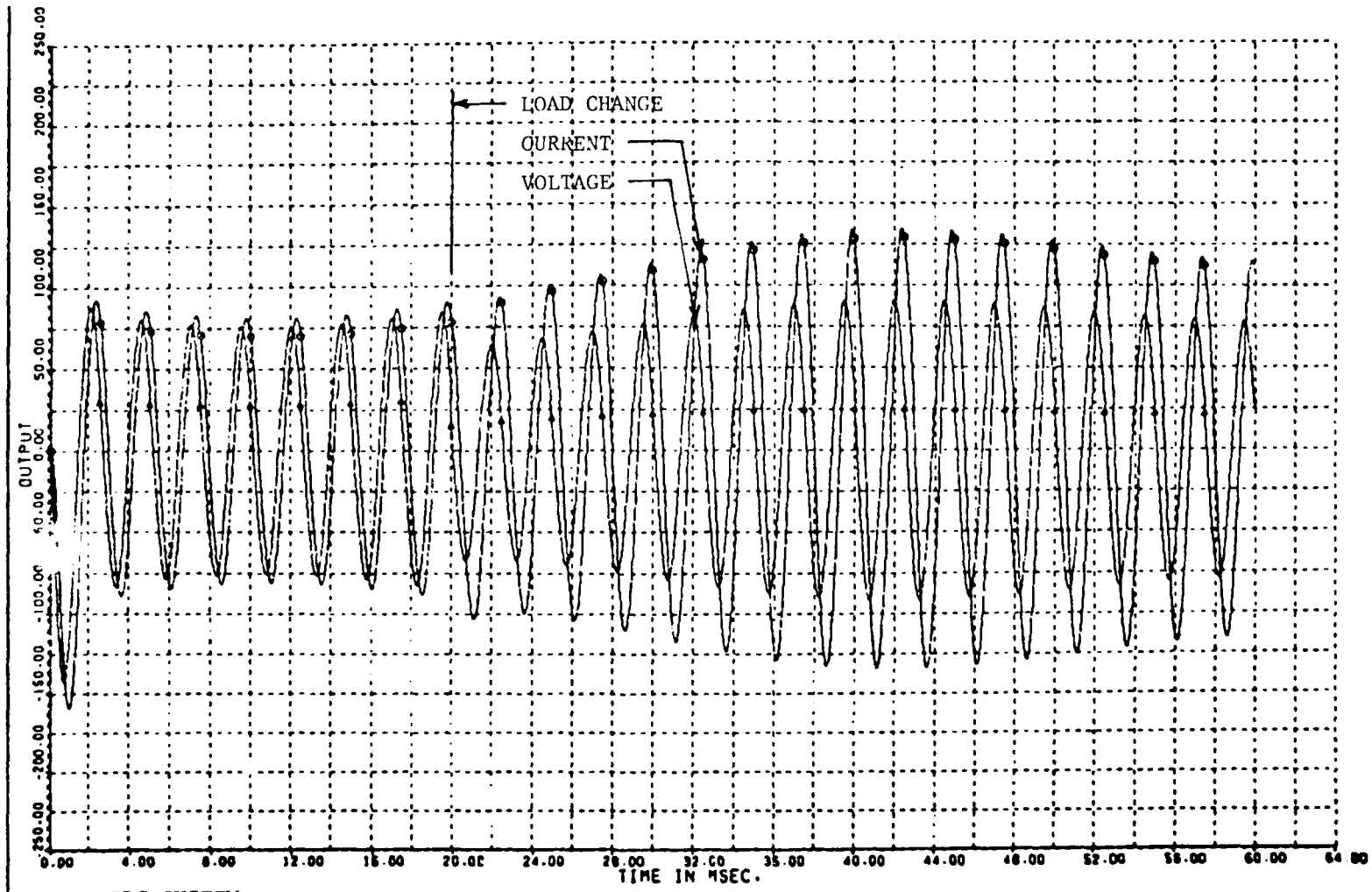

IDG SYSTEM

STEP CHANGE IN LOAD
1.0 PU TO 2.0 PU AT .8 LAGGING PF
AMGAIN = 500

FIGURE B-2

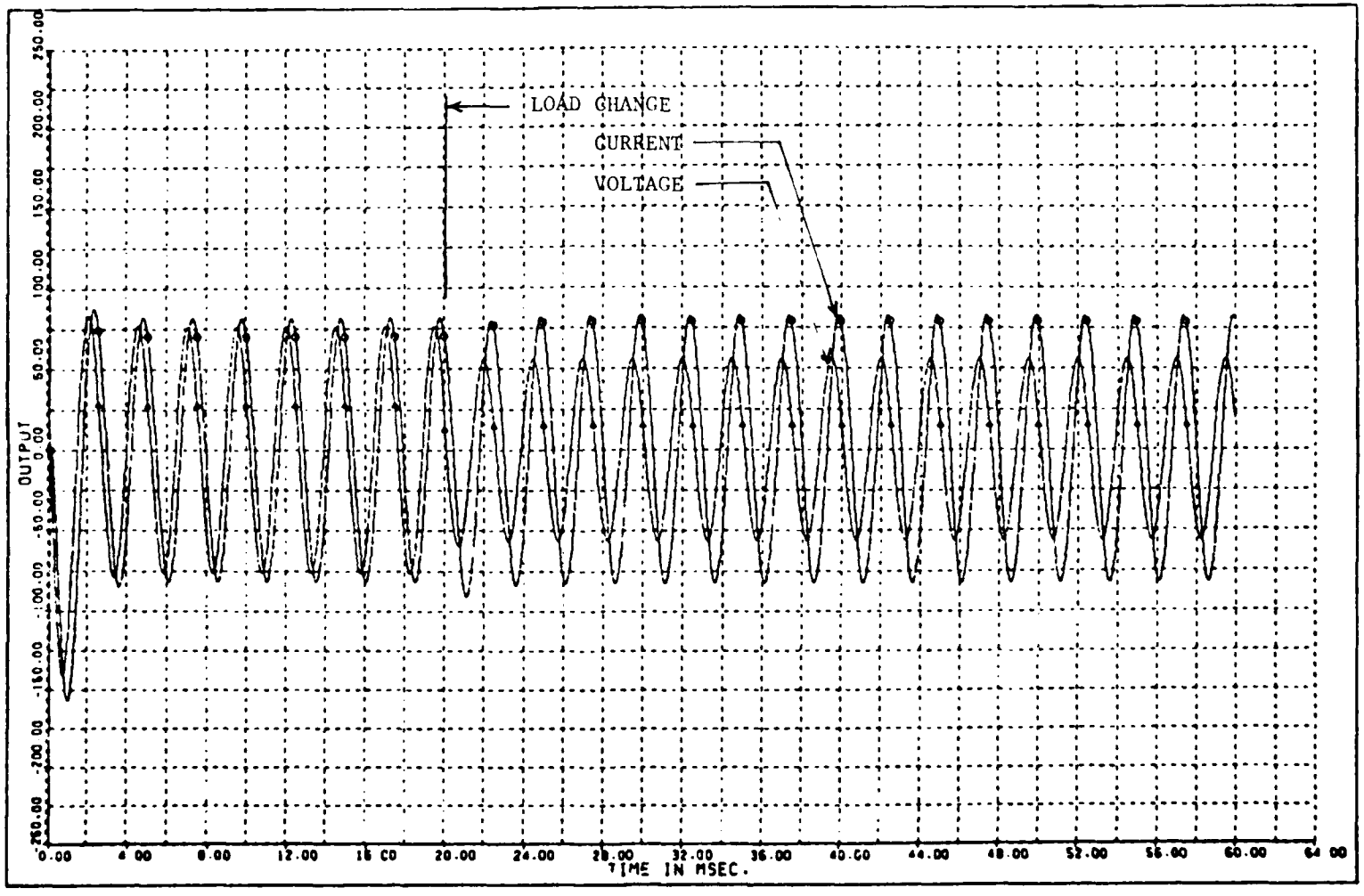

IDG SYSTEM

STEP CHANGE IN LOAD
1.0 PU TO 2.0 PU AT .8 LAGGING PF
AMGAIN = 0

FIGURE B-3

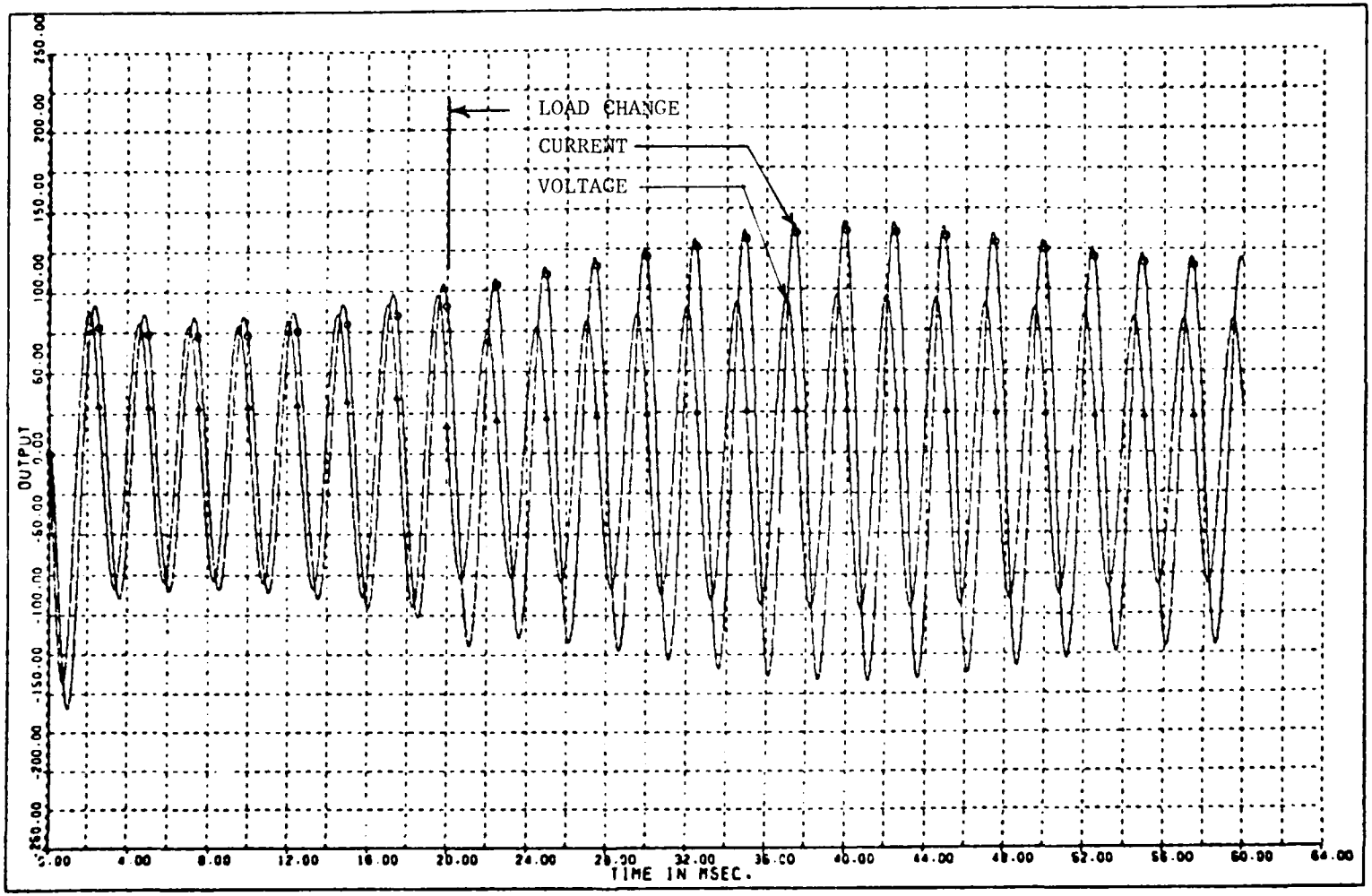

IDG SYSTEM

STEP CHANGE IN LOAD
1.0 PU TO 2.0 PU AT .8 LAGGING PF
AMGAIN = 750

FIGURE B-4

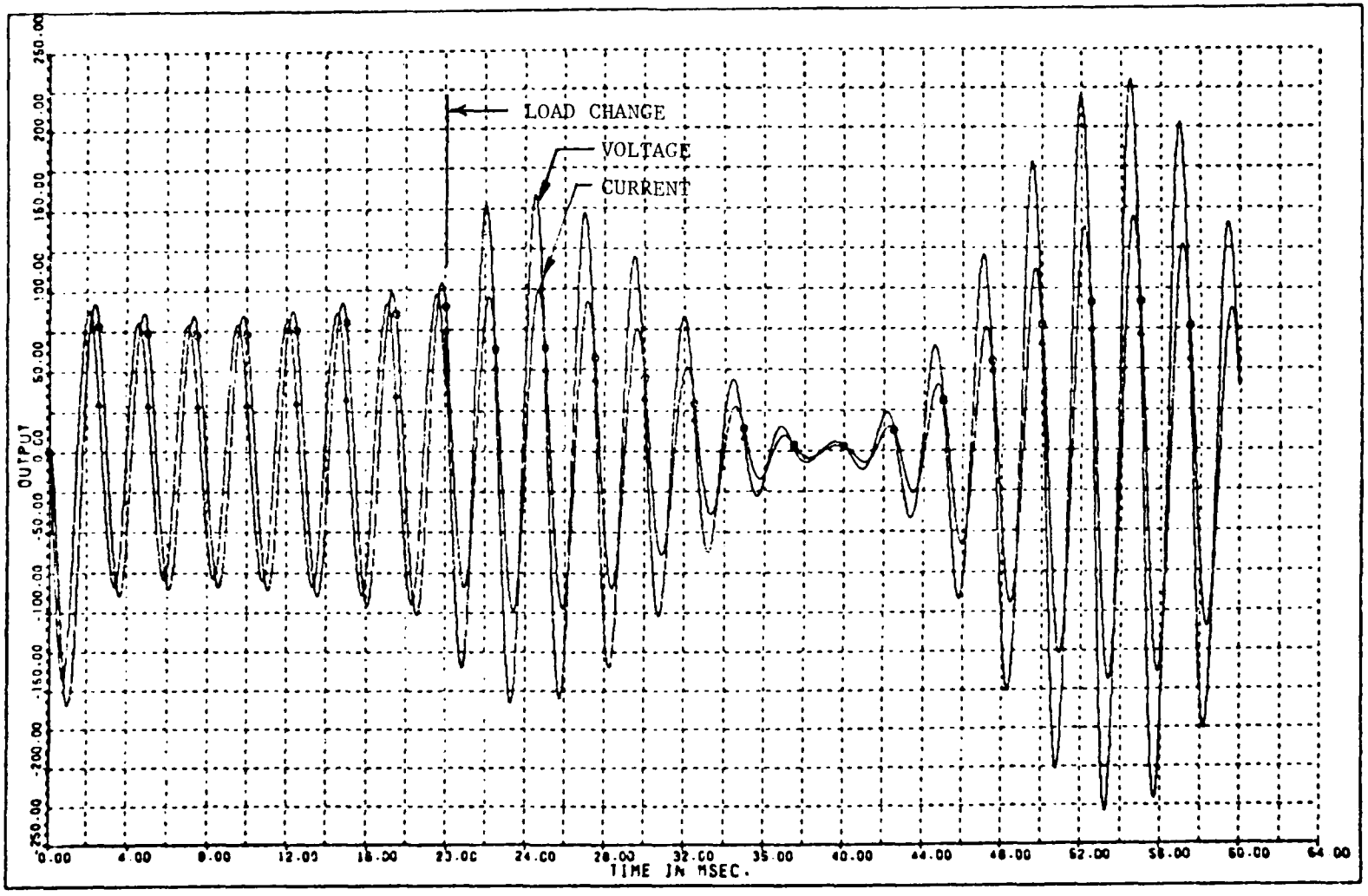

IDG SYSTEM

STEP CHANGE IN LOAD
1.0 PU TO .5 PU AT .8 LAGGING PF
AMGAIN = 750

FIGURE B-5

IDG SYSTEM

PHASE A TERMINAL VOLTAGE
STEP CHANGE IN LOAD
1.0 PU TO 2.0 PU AT .8 LAGGING PF
AMGAIN = 500

FIGURE B-6

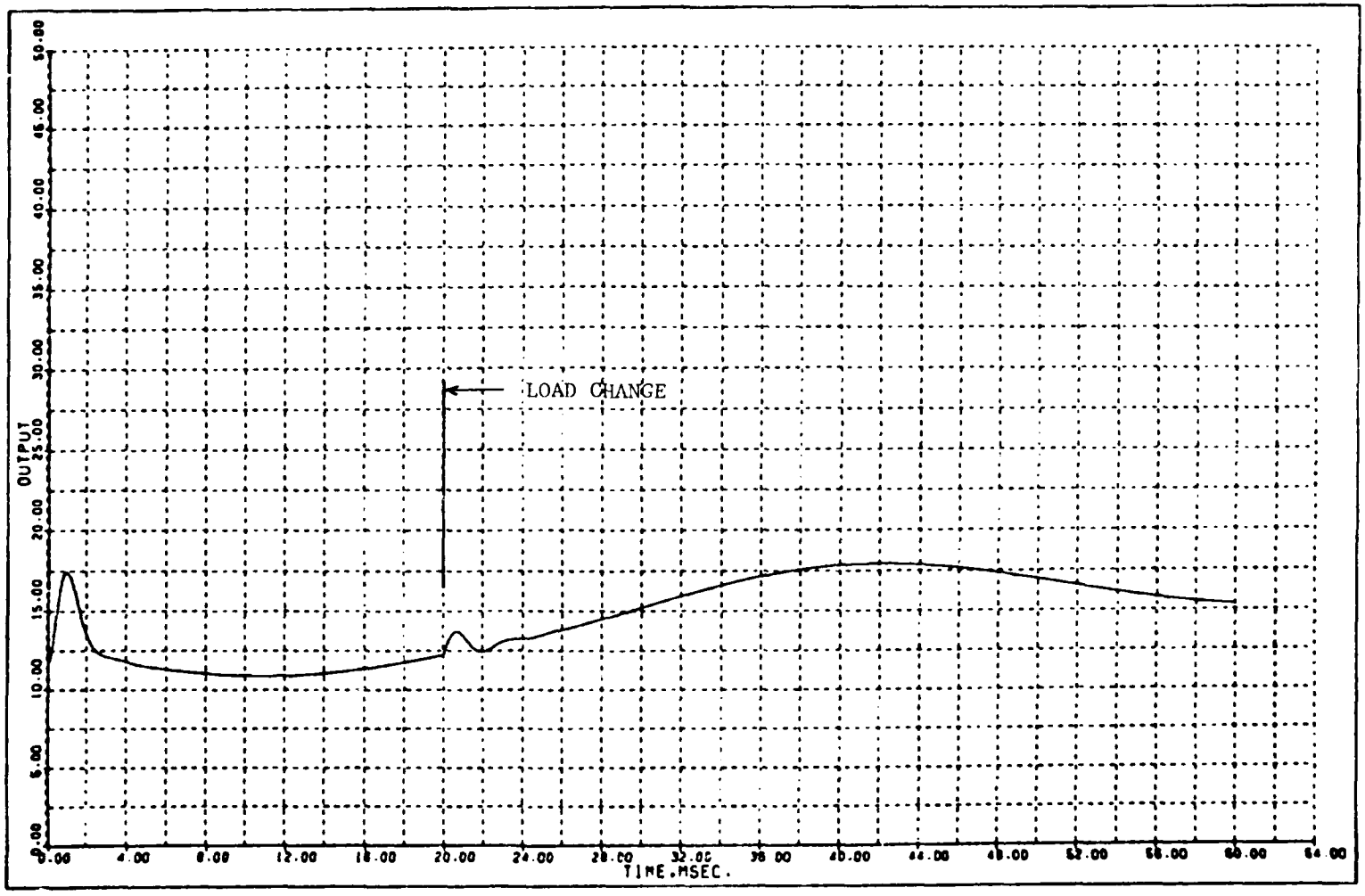

IDG SYSTEM

FIELD CURRENT

FIGURE B-6 (CONT'D)

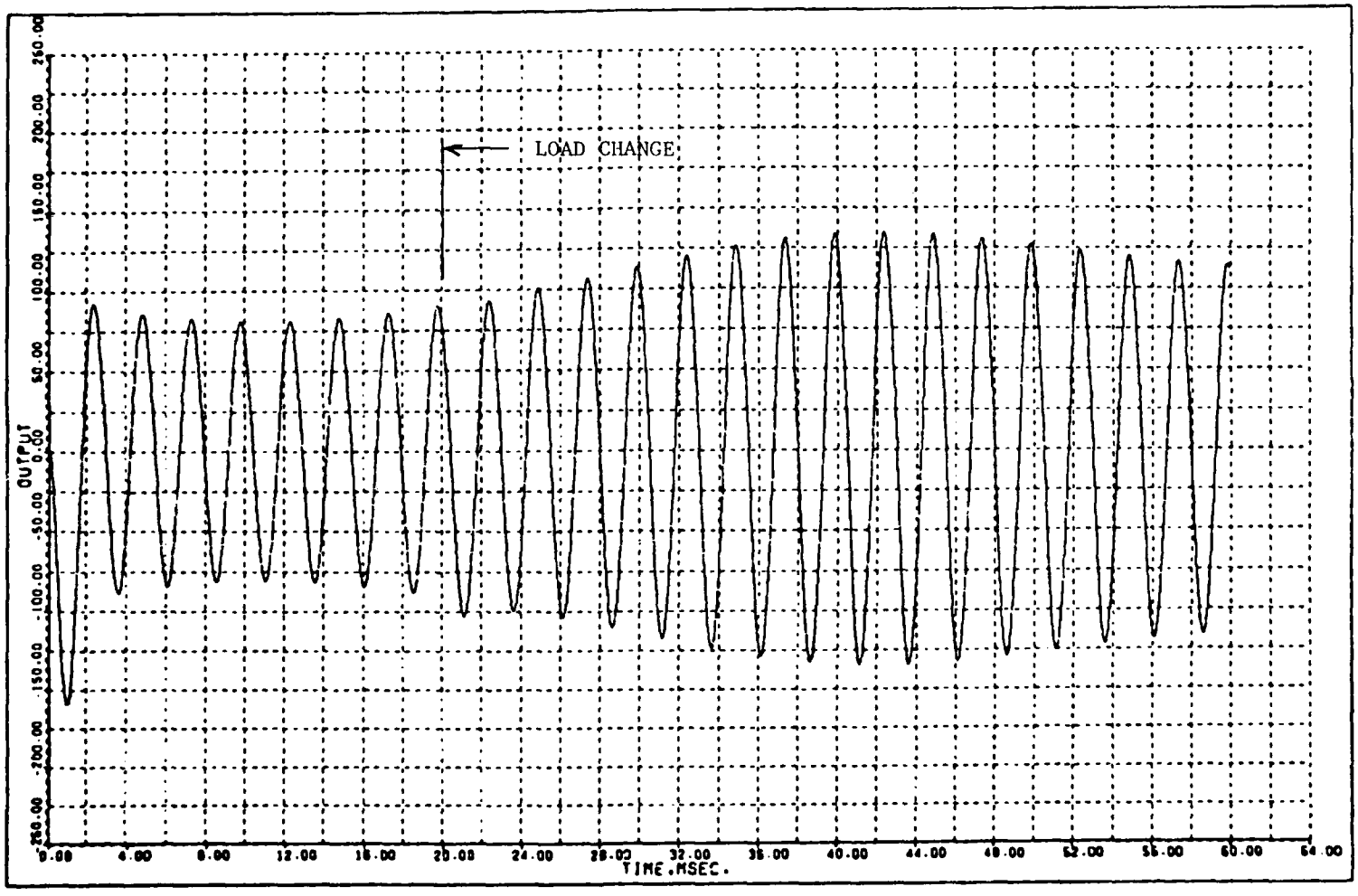

IDG SYSTEM

PHASE A ARMATURE CURRENT

FIGURE B-6 (CONT'D)

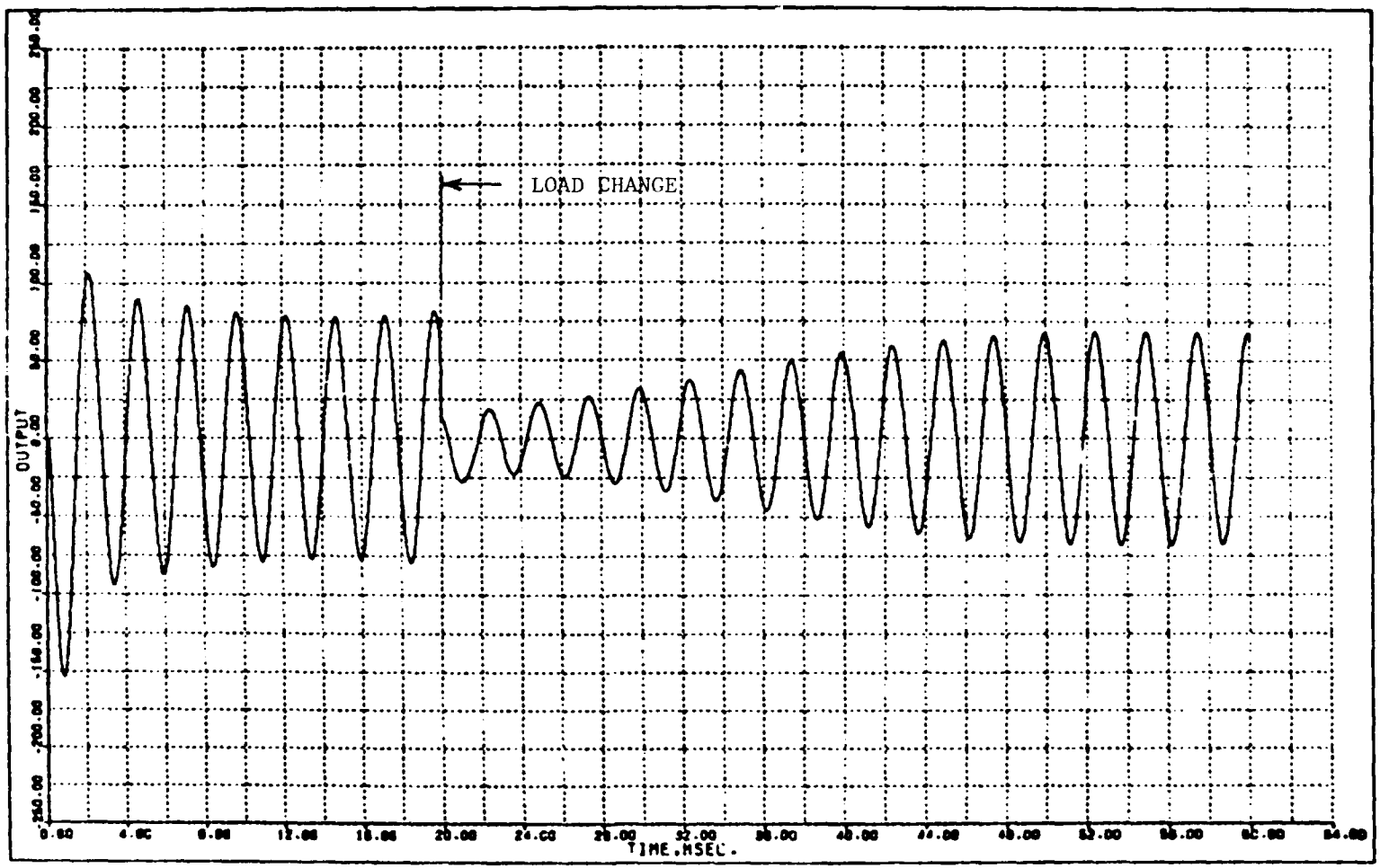

IDG SYSTEM

PHASE A TERMINAL VOLTAGE
STEP CHANGE IN LOAD
1.0 PU TO 4.0 PU AT UNITY PF
AMGAIN = 500

FIGURE B-7

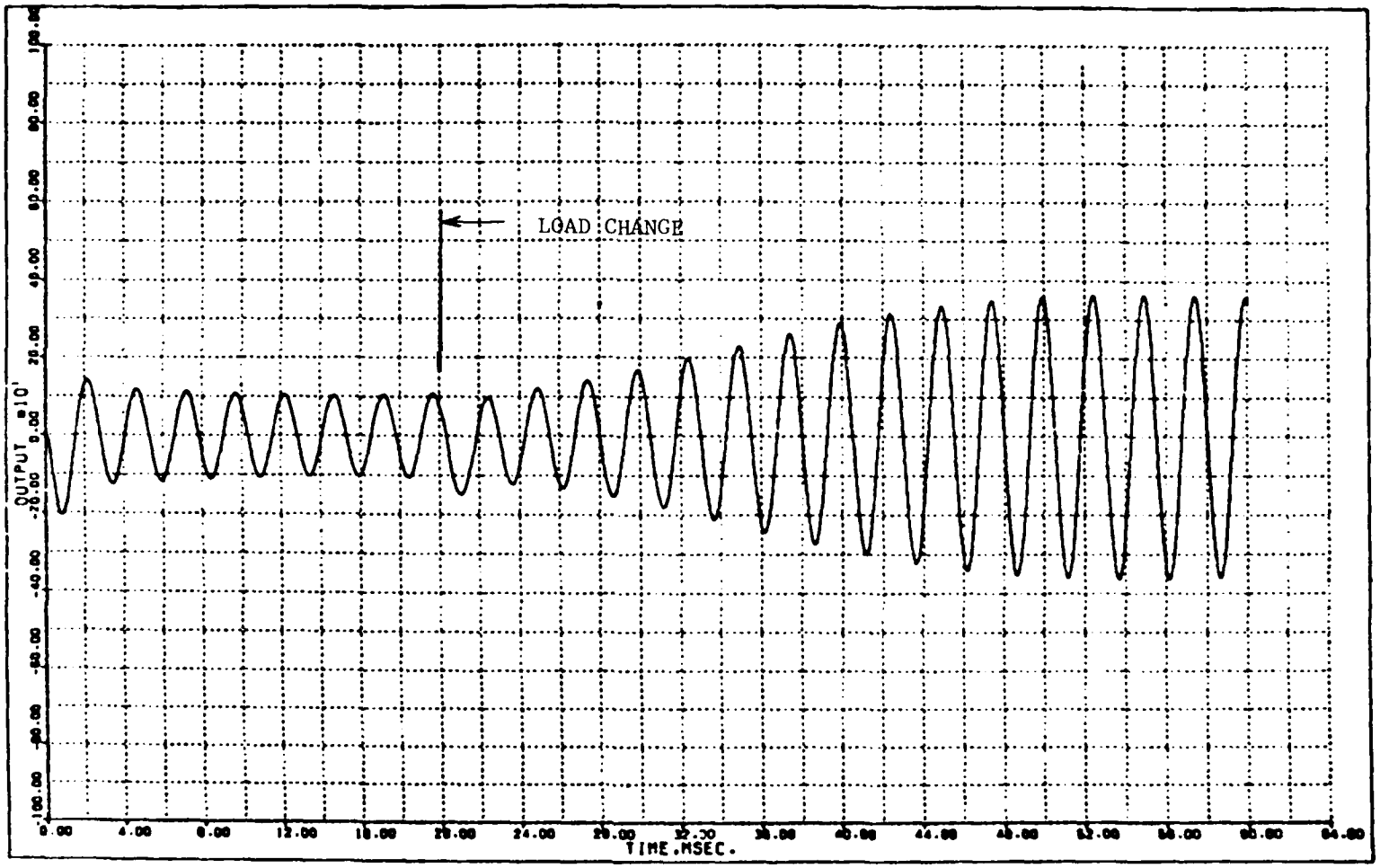

IDG SYSTEM PHASE A ARMATURE CURRENT

FIGURE B-7 (CONT'D)

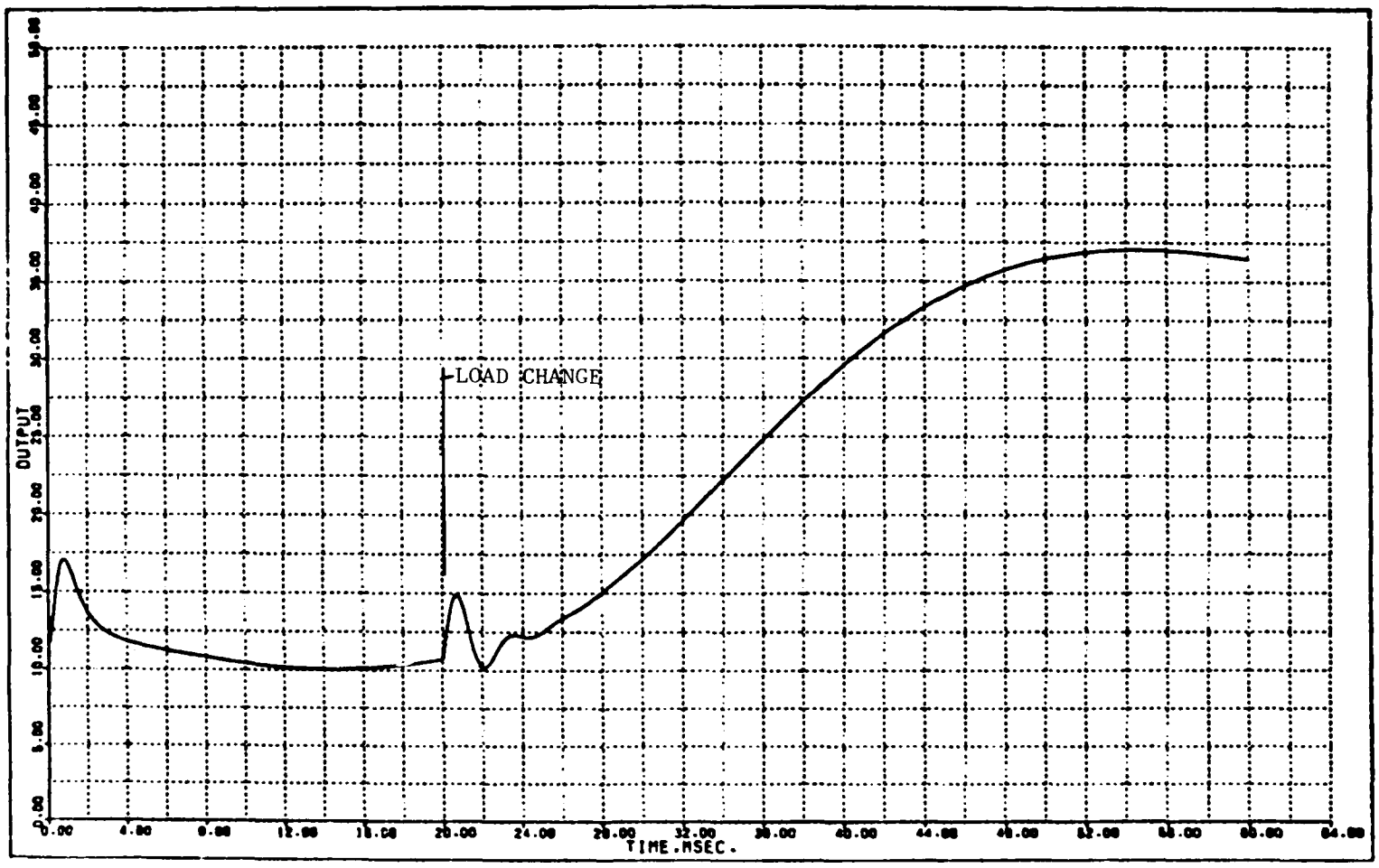

FIELD CURRENT

FIGURE B-7 (CONT'D)

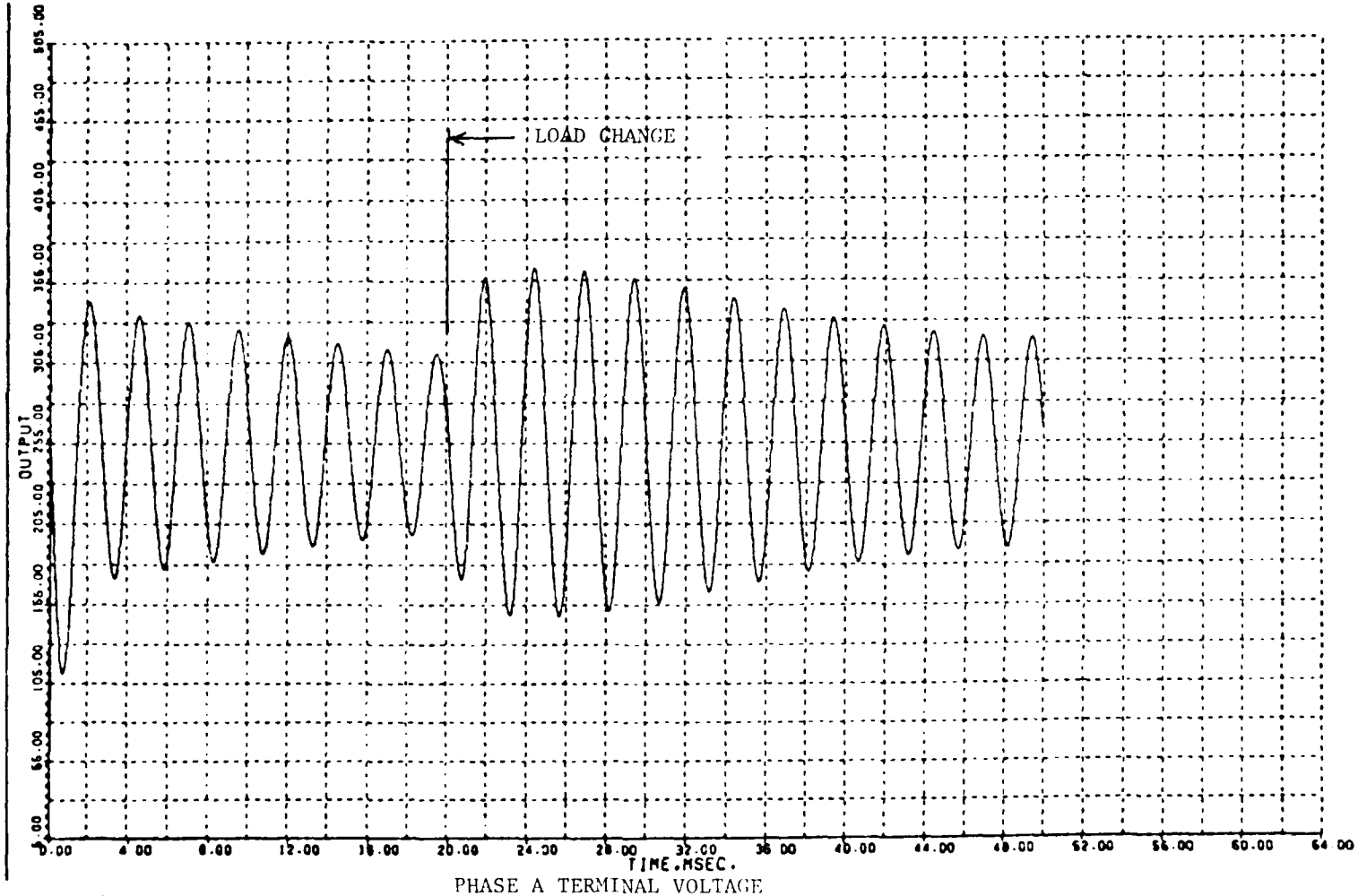

IDG SYSTEM

PHASE A TERMINAL VOLTAGE
STEP CHANGE IN LOAD
1.0 PU TO .2 PU AT .8 LAGGING PF
AMGAIN = 100

FIGURE B-8

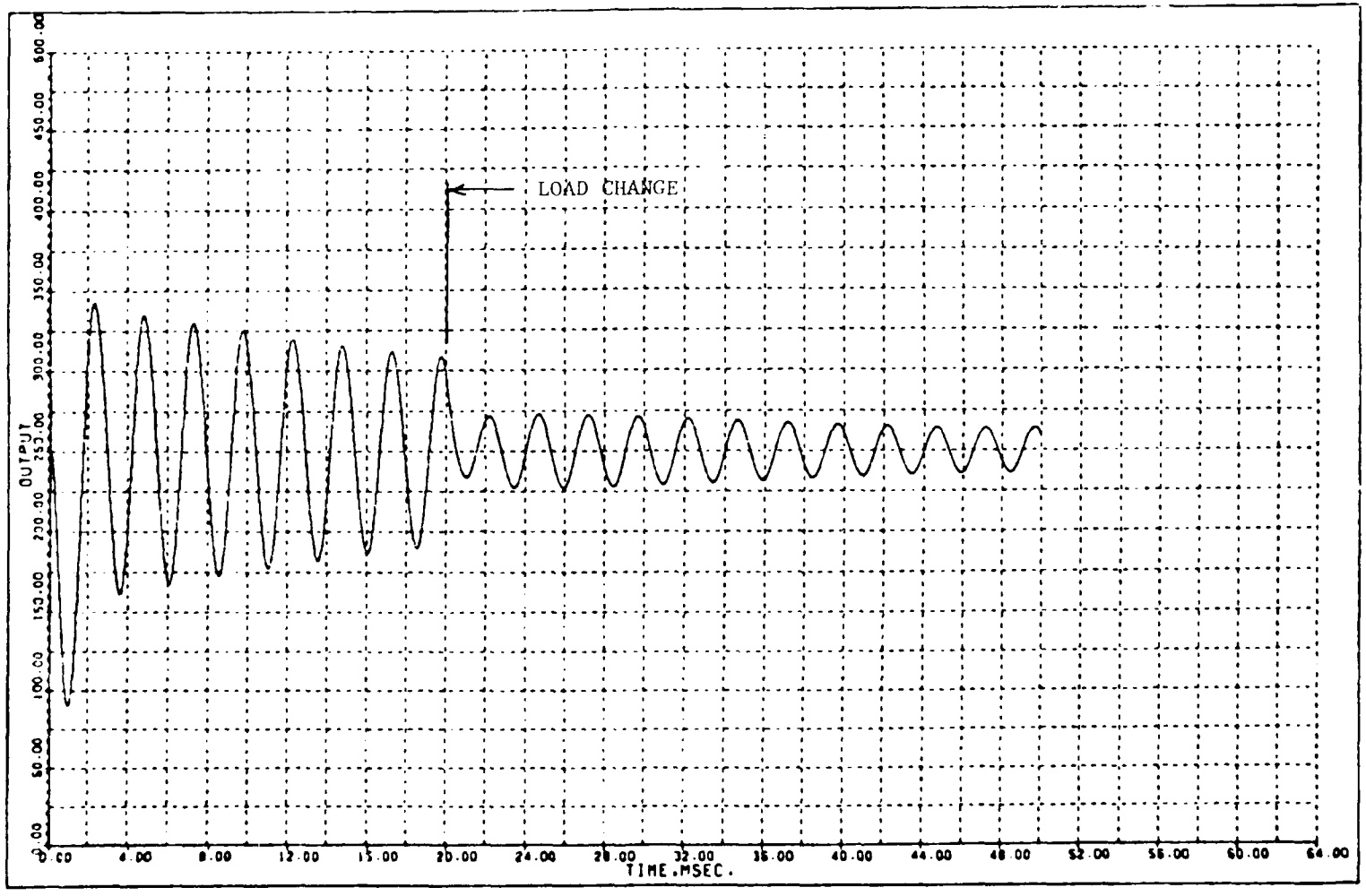

PHASE A ARMATURE CURRENT

FIGURE B-8 (CONT'D)

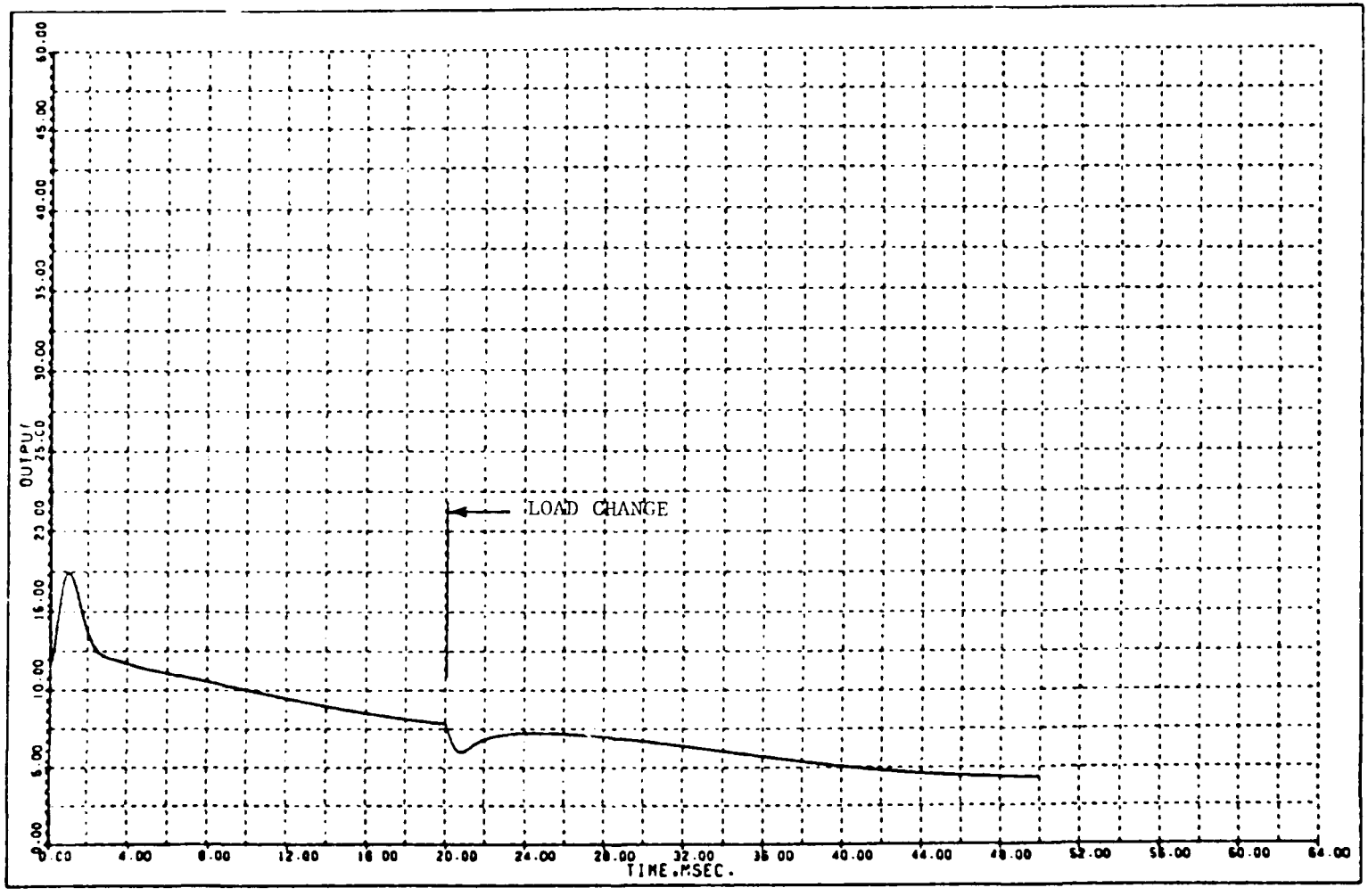

FIELD CURRENT

FIGURE B-8 (CONT'D)

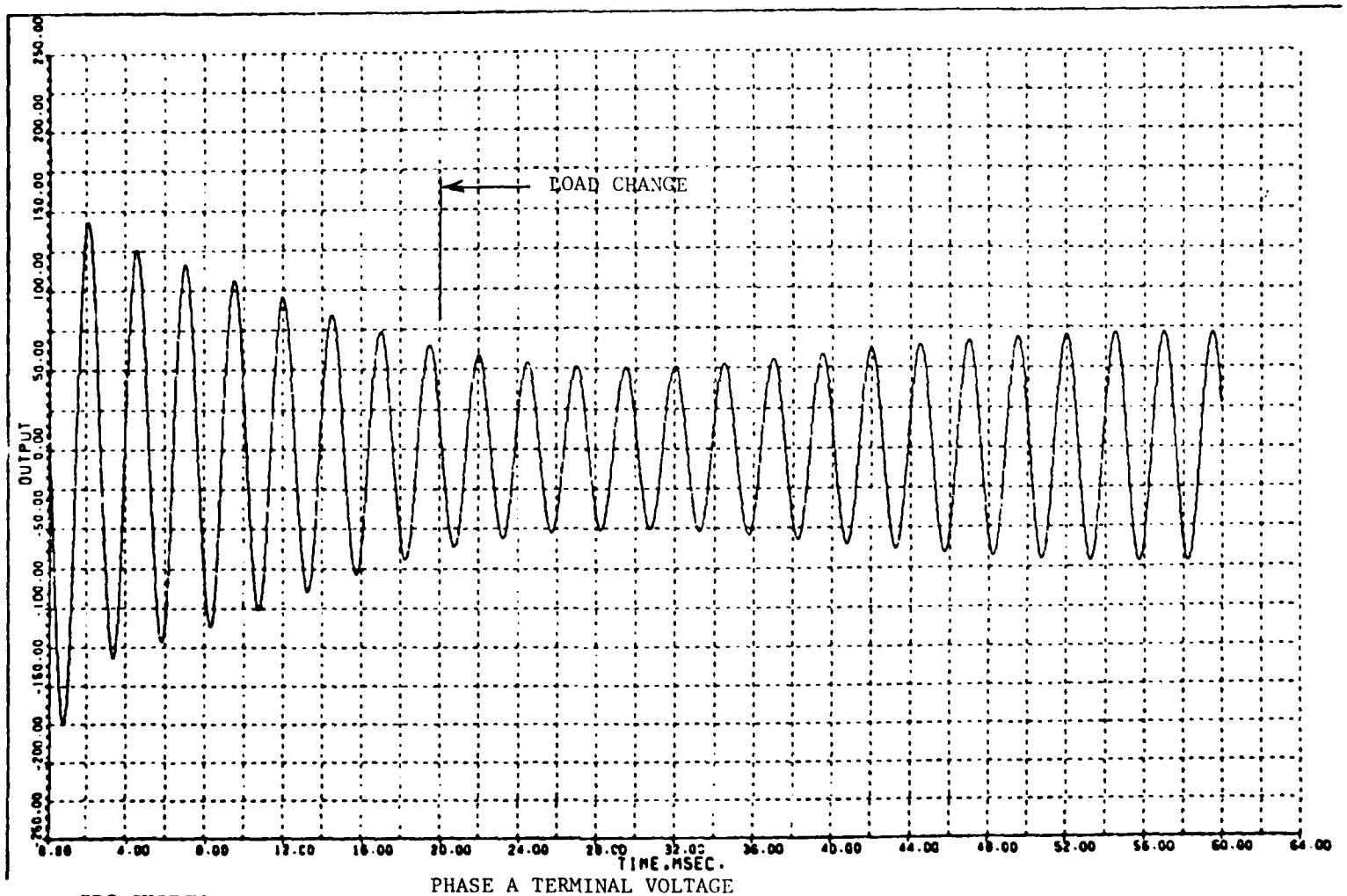

IDG SYSTEM

PHASE A TERMINAL VOLTAGE
.5 PU LOAD AT UNITY PF
AMGAIN = 100

FIGURE B-9

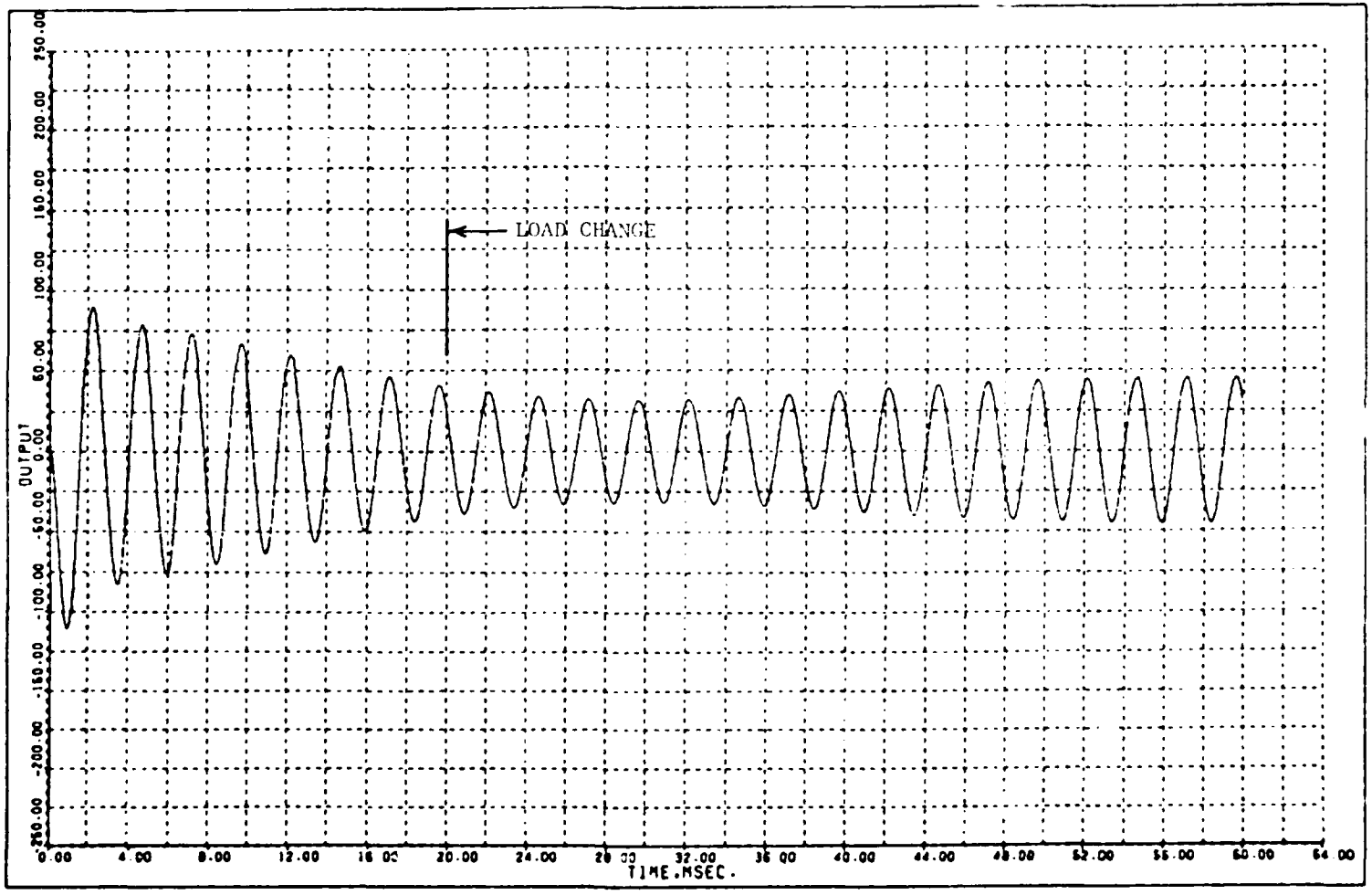

PHASE A ARMATURE CURRENT

FIGURE B-9 (CONT'D)

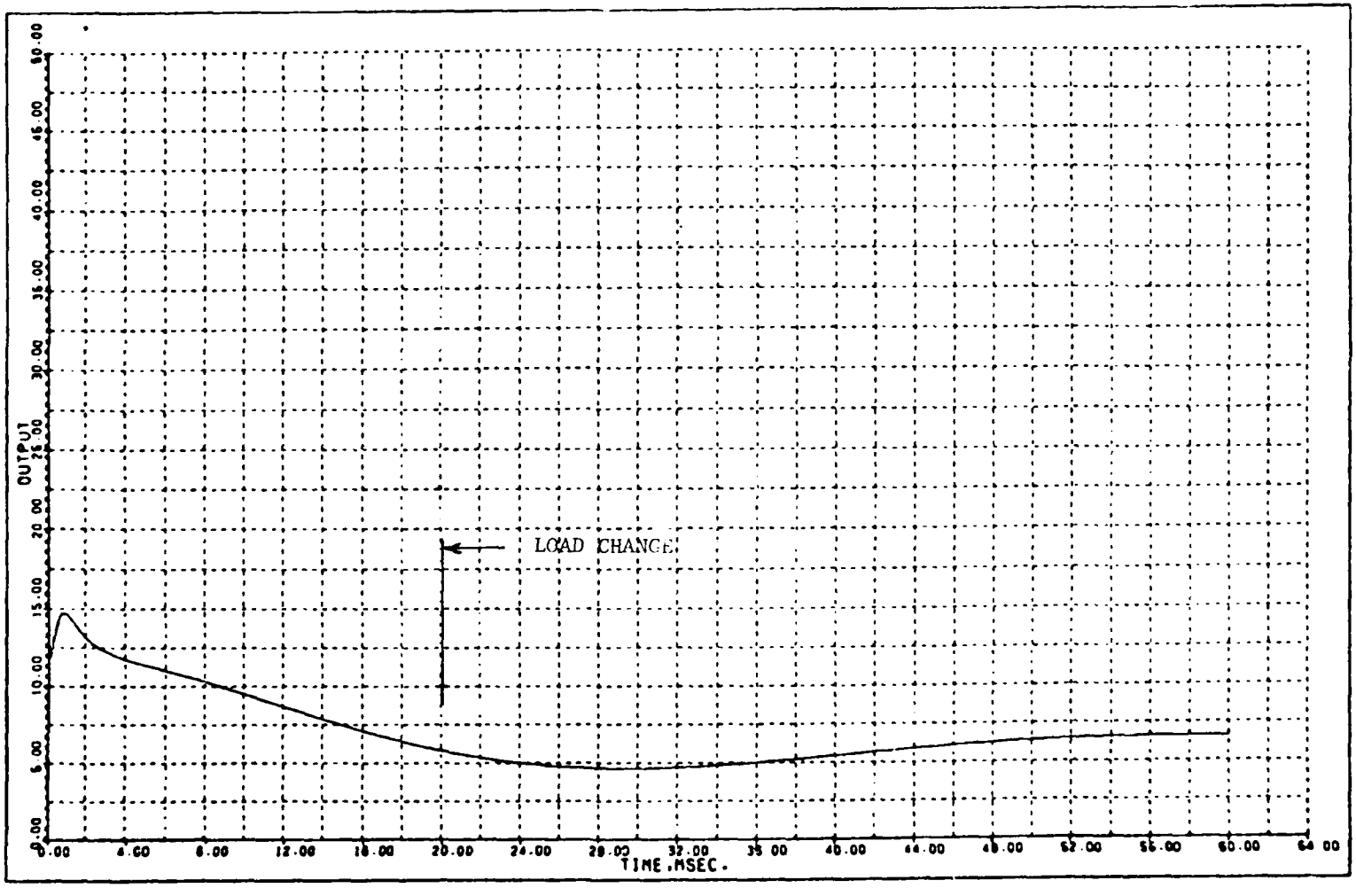

PHASE A FIELD CURRENT

FIGURE B-9 (CONT'D)

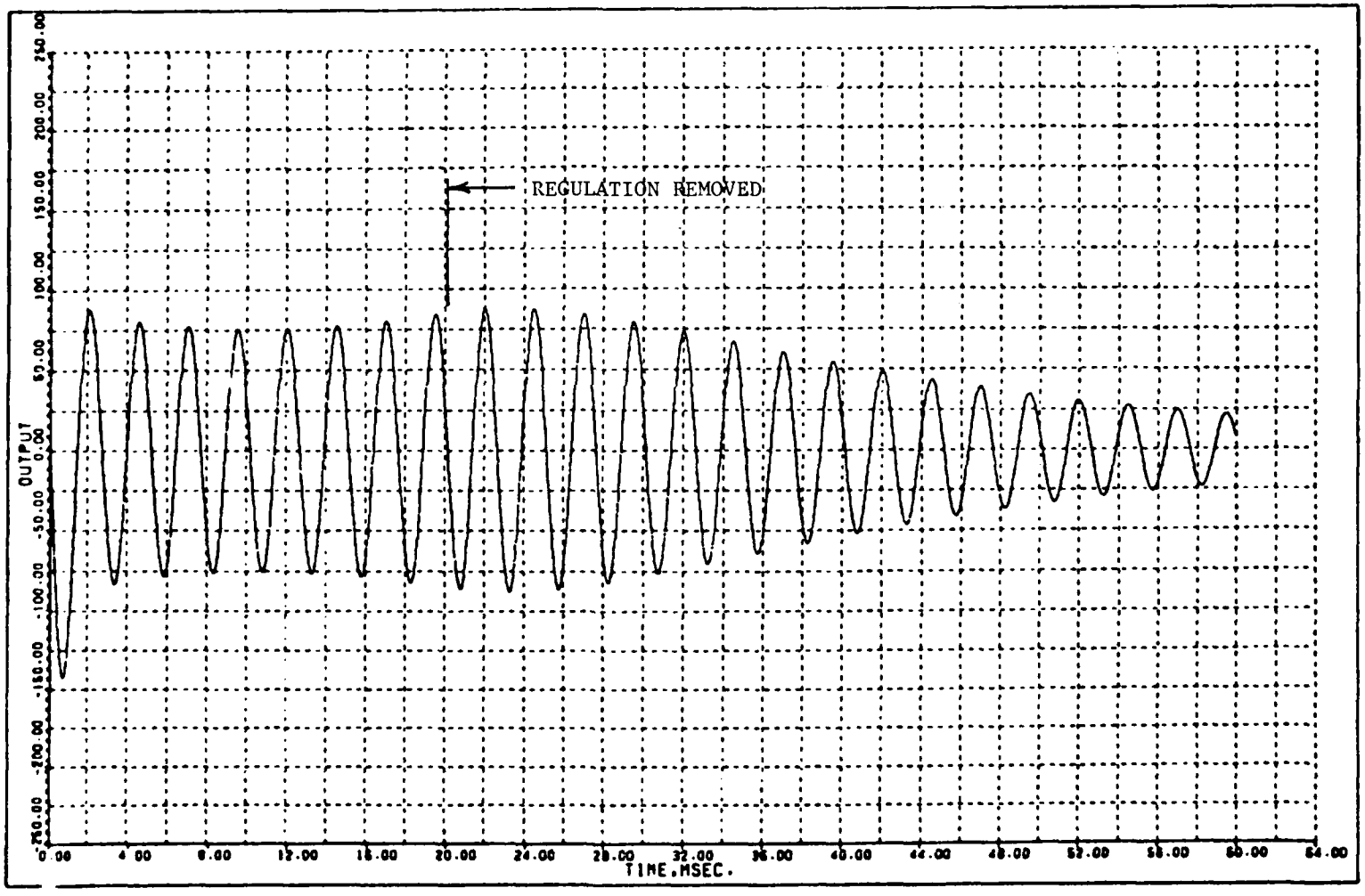

PHASE A TERMINAL VOLTAGE
LOSS OF VOLTAGE REGULATOR

FIGURE B-10

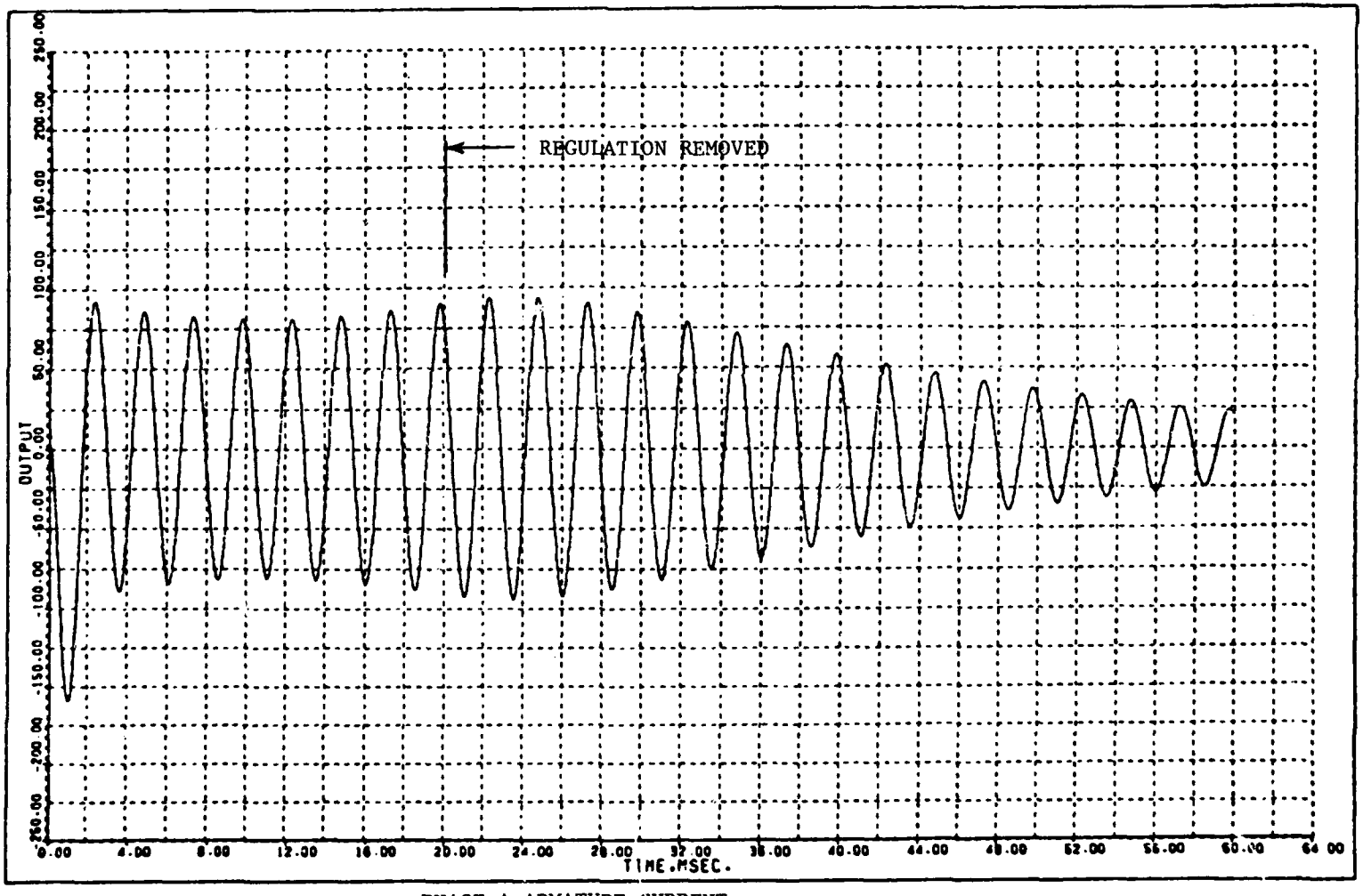

PHASE A ARMATURE CURRENT
LOSS OF VOLTAGE REGULATOR

FIGURE B-10 (CONT'D)

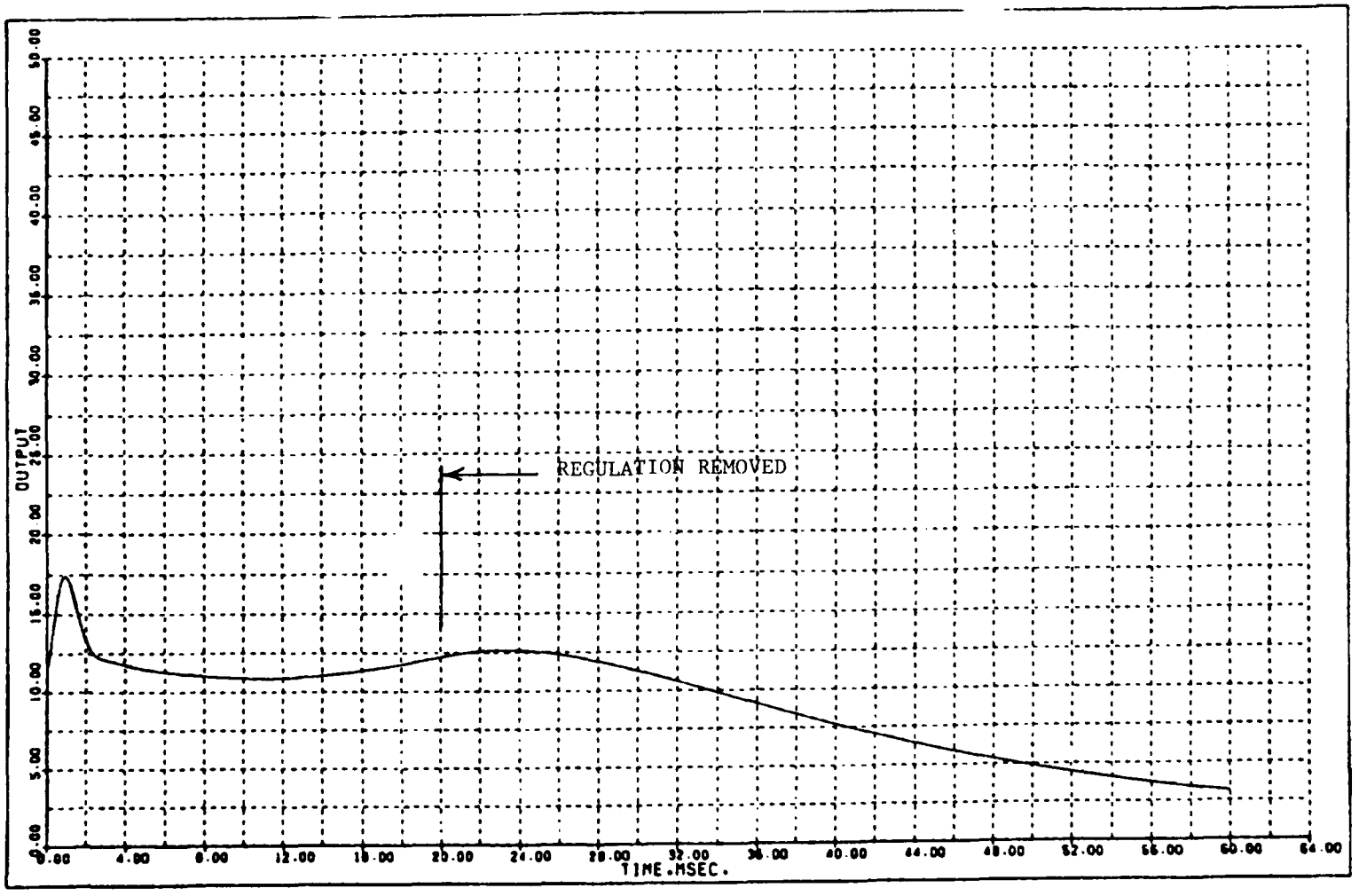

PHASE A FIELD CURRENT
LOSS OF VOLTAGE REGULATOR

FIGURE B-10 (CONT'D)

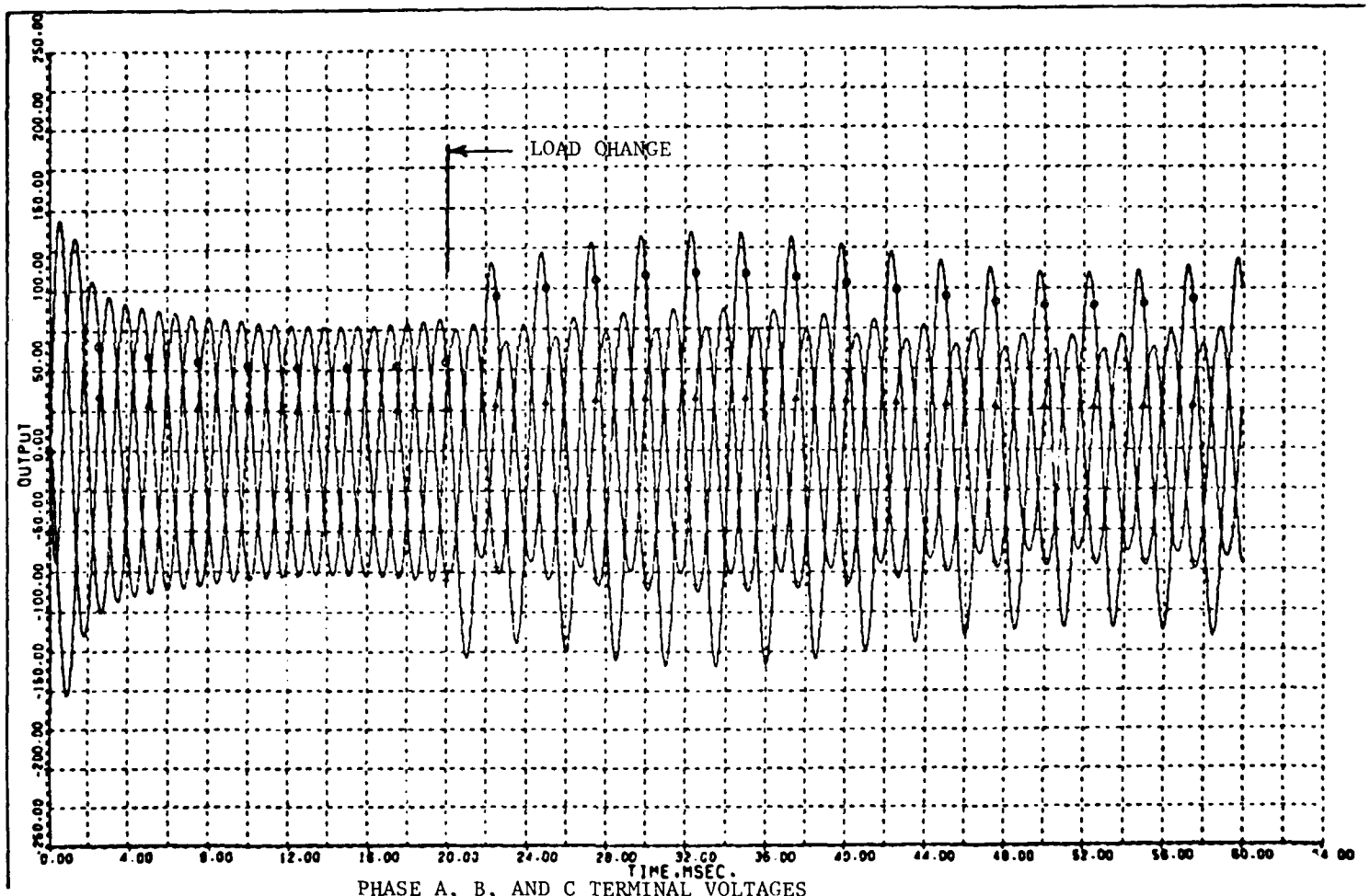

IDG SYSTEM

PHASE A, B, AND C TERMINAL VOLTAGES
PHASE B, C - 1.0 PU AT UNITY PF
PHASE A - 1.0 PU TO 2.0 PU AT UNITY PF
AMGAIN = 500

FIGURE B-11

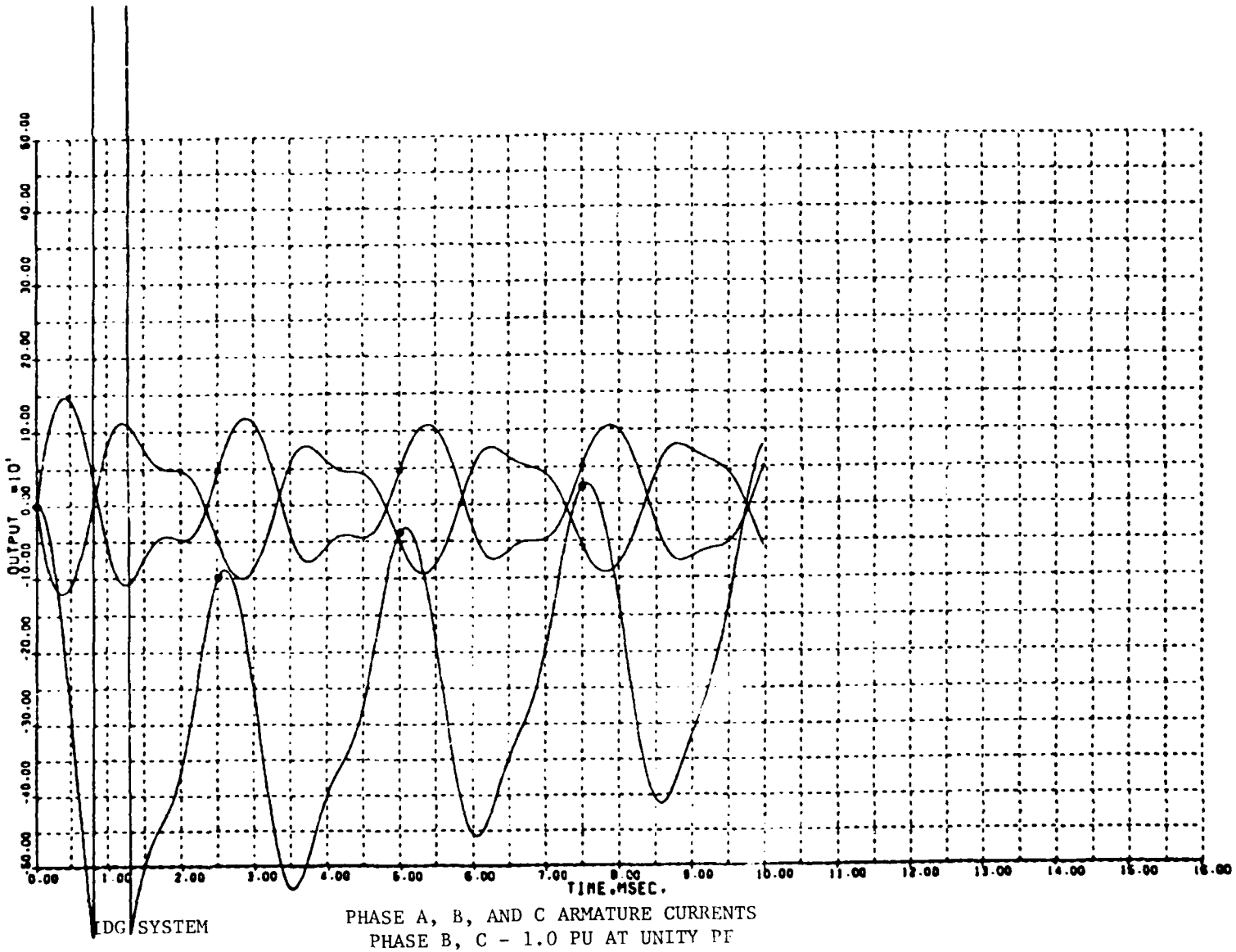

PHASE A, B, AND C ARMATURE CURRENTS
PHASE B, C - 1.0 PU AT UNITY PF
PHASE A - SHORT CIRCUIT
AMGAIN = 500

FIGURE B-12

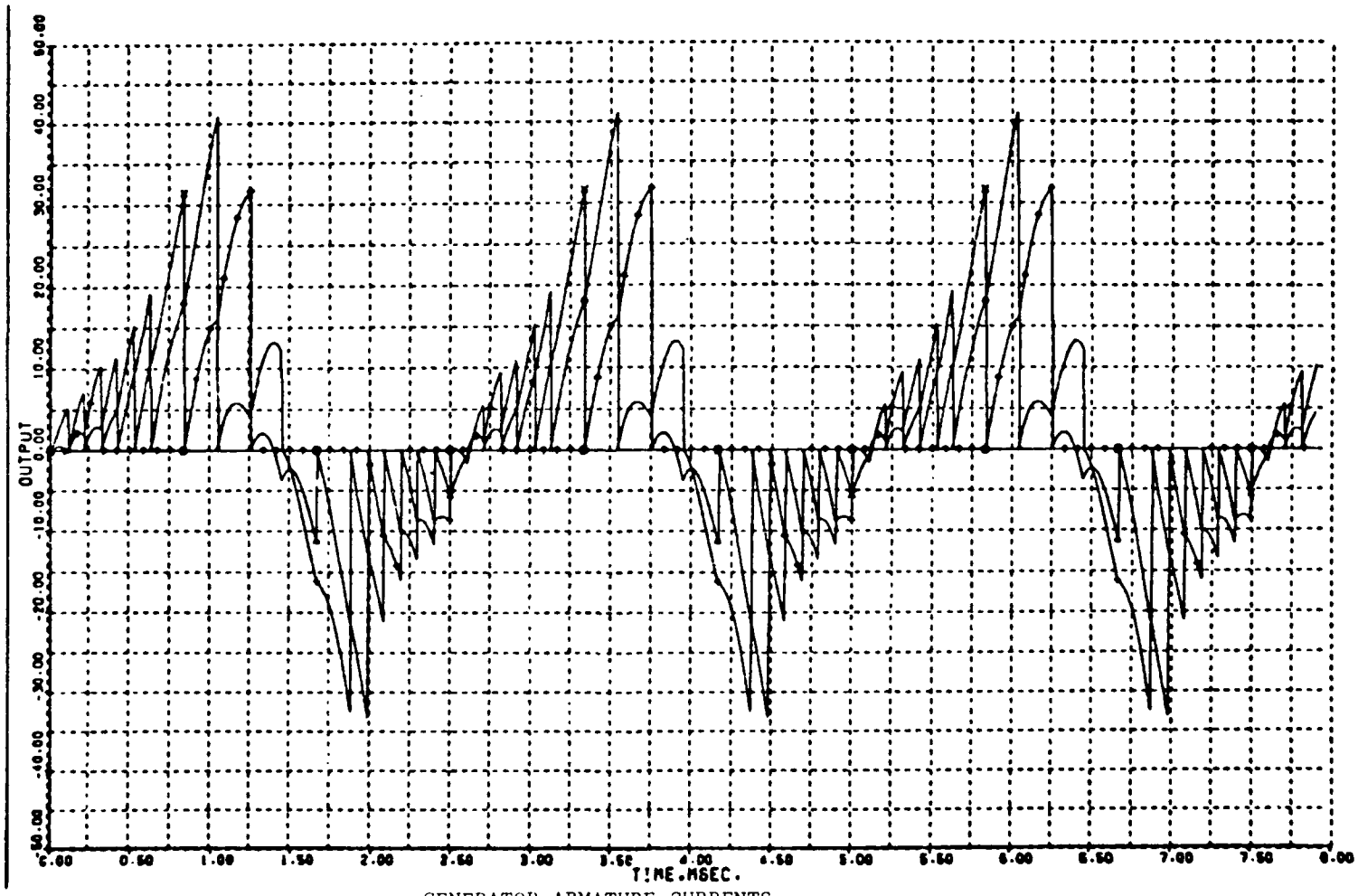

VSCF SYSTEM

GENERATOR ARMATURE CURRENTS
1.0 PU

FIGURE B-13

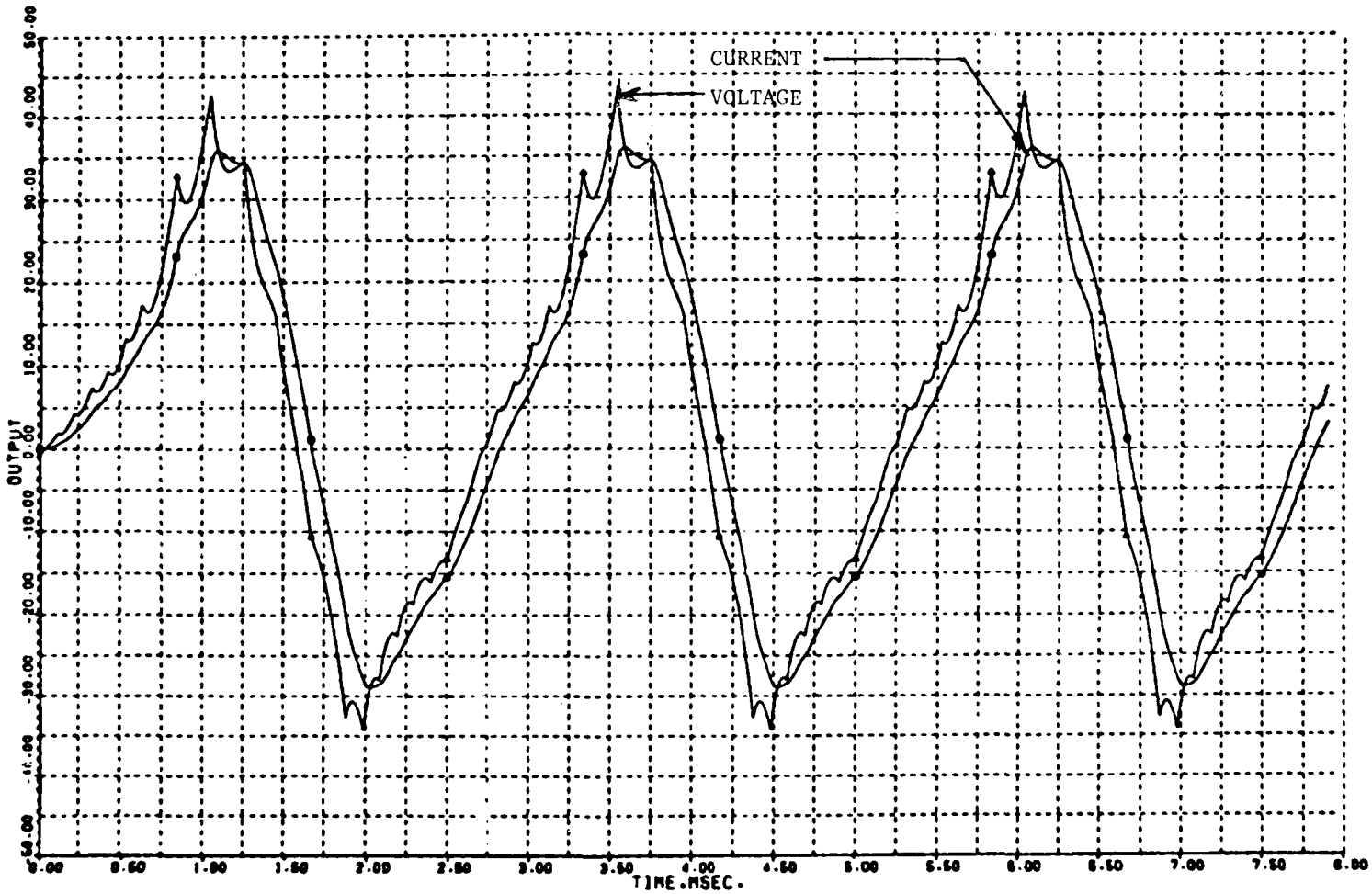

VSCF SYSTEM

LOAD VOLTAGE AND CURRENT
1.0 PU

FIGURE B-13 (CONT'D)

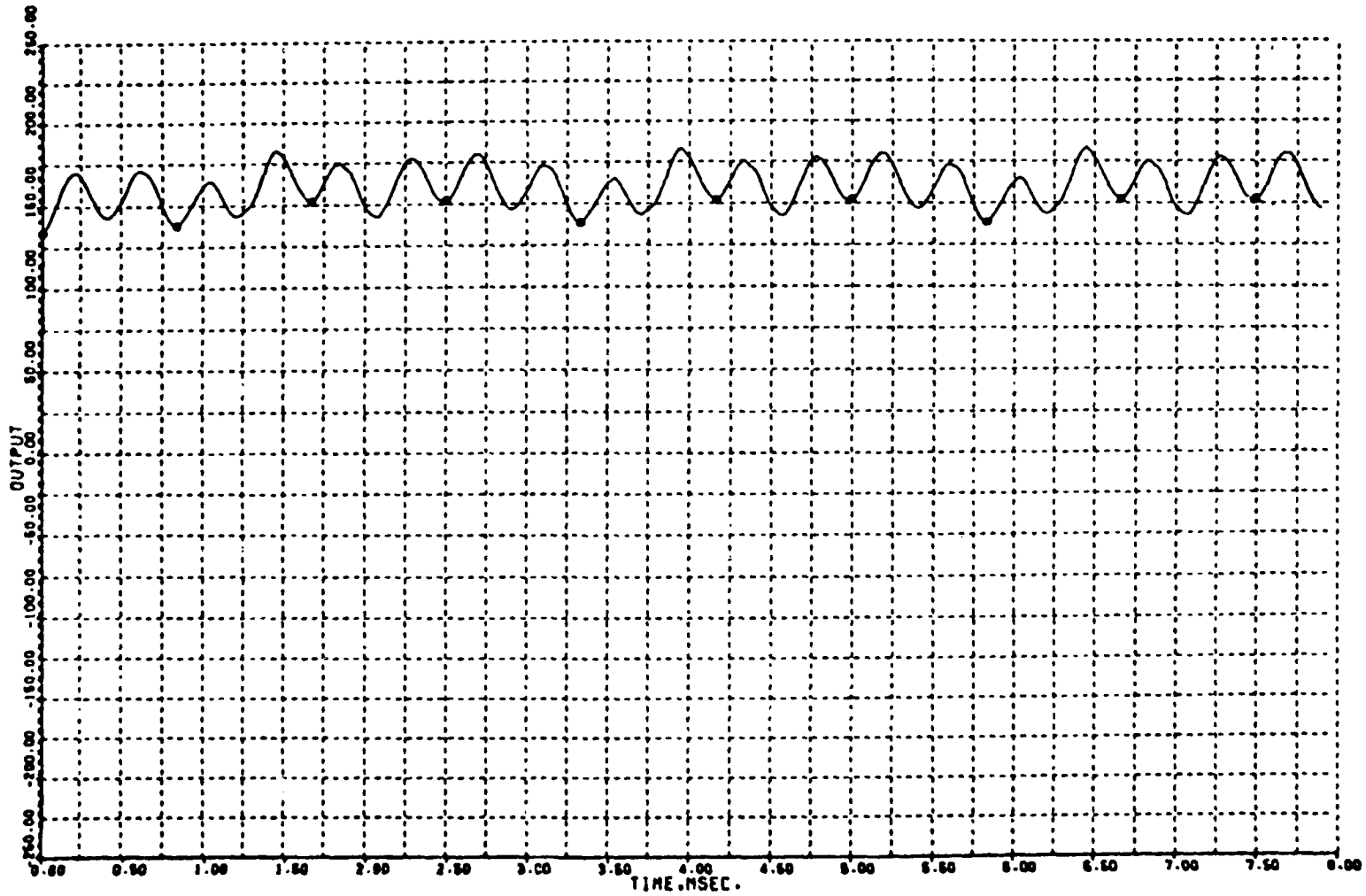

VSCF SYSTEM

FIELD CURRENT
1.0 PU

FIGURE B-13 (CONT'D)

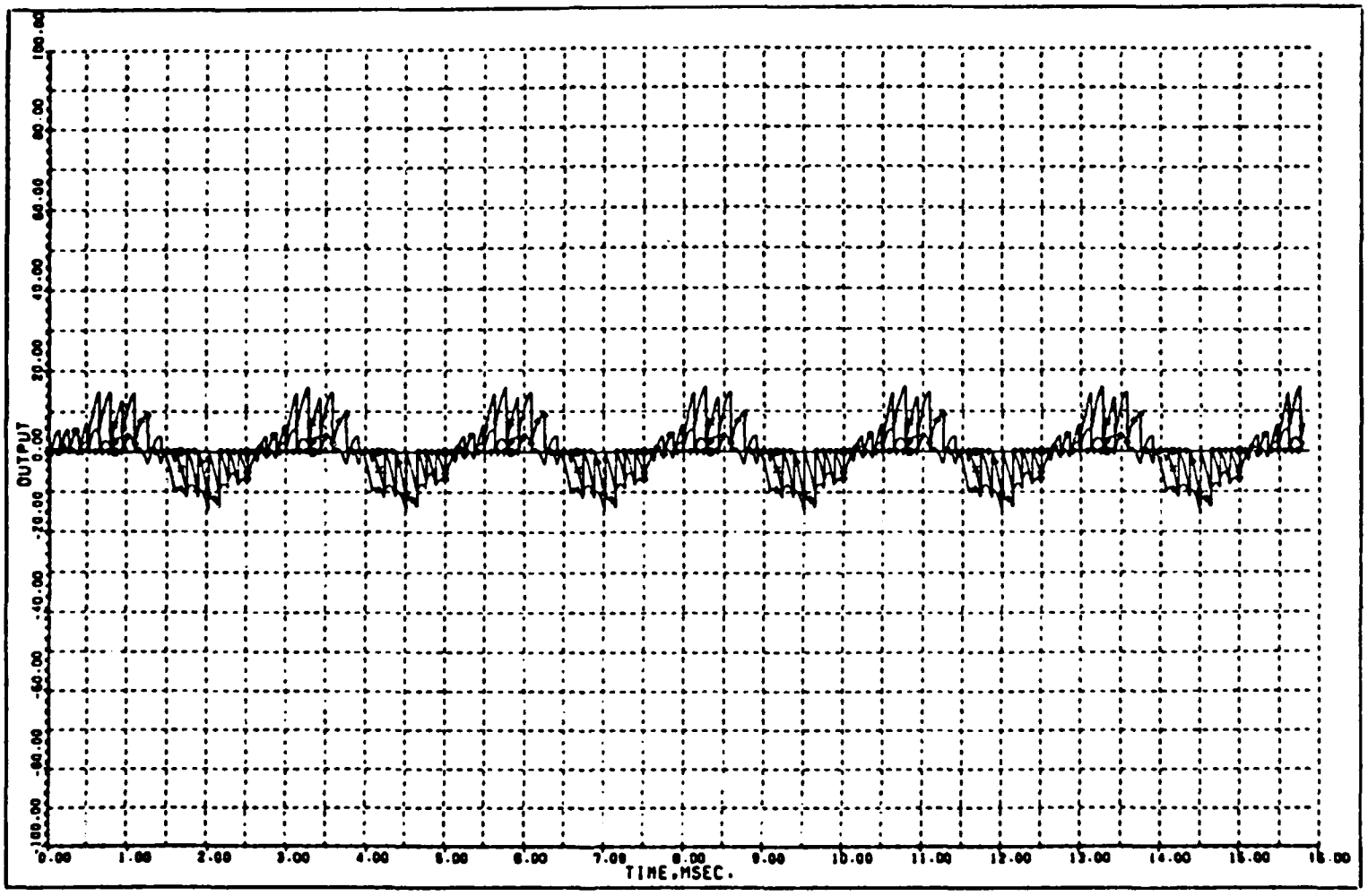

VSCF SYSTEM

GENERATOR ARMATURE CURRENTS
ONE-HALF AMPLITUDE

FIGURE B-14

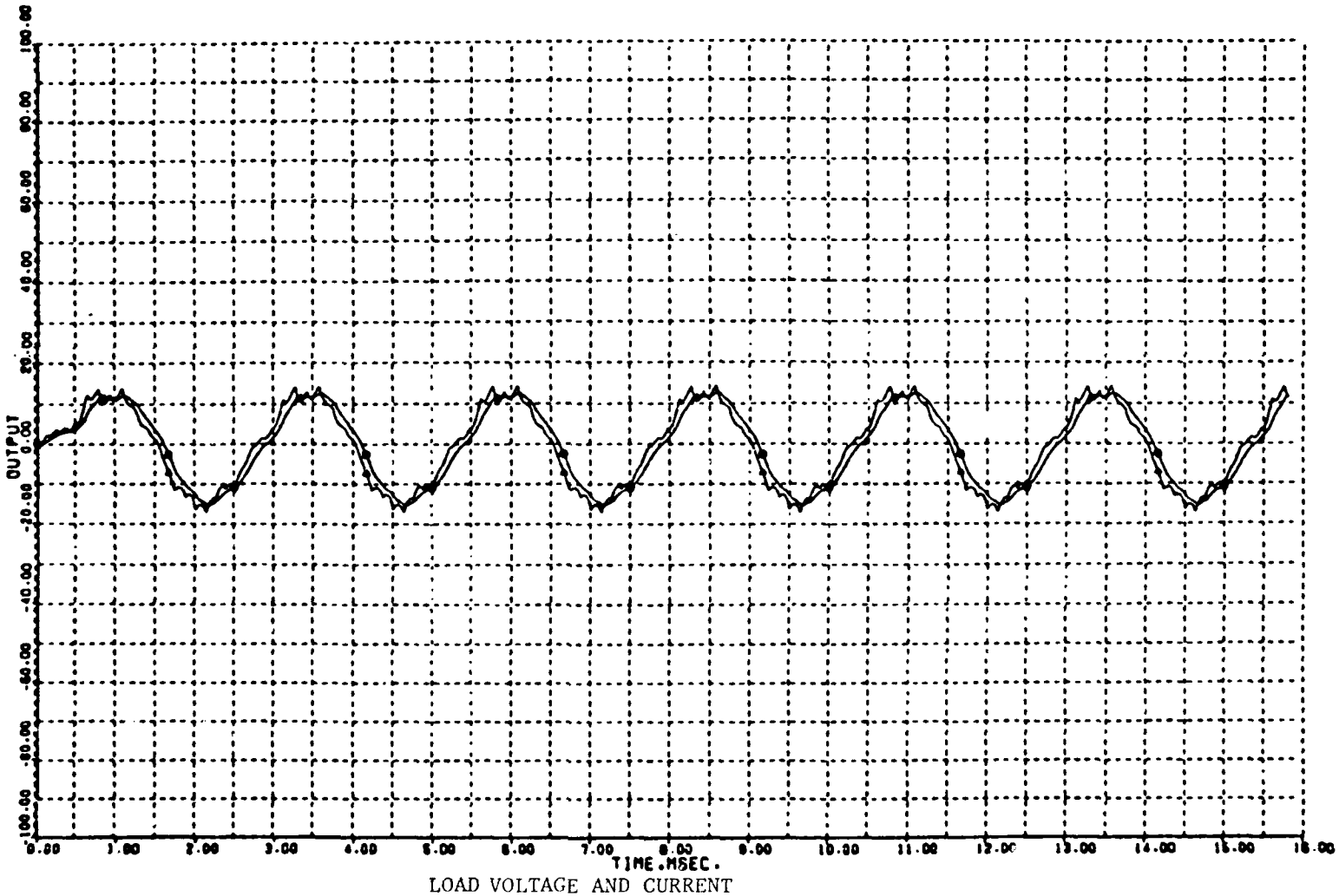

LOAD VOLTAGE AND CURRENT
ONE-HALF AMPLITUDE

VSCF SYSTEM

FIGURE B-14 (CONT'D)

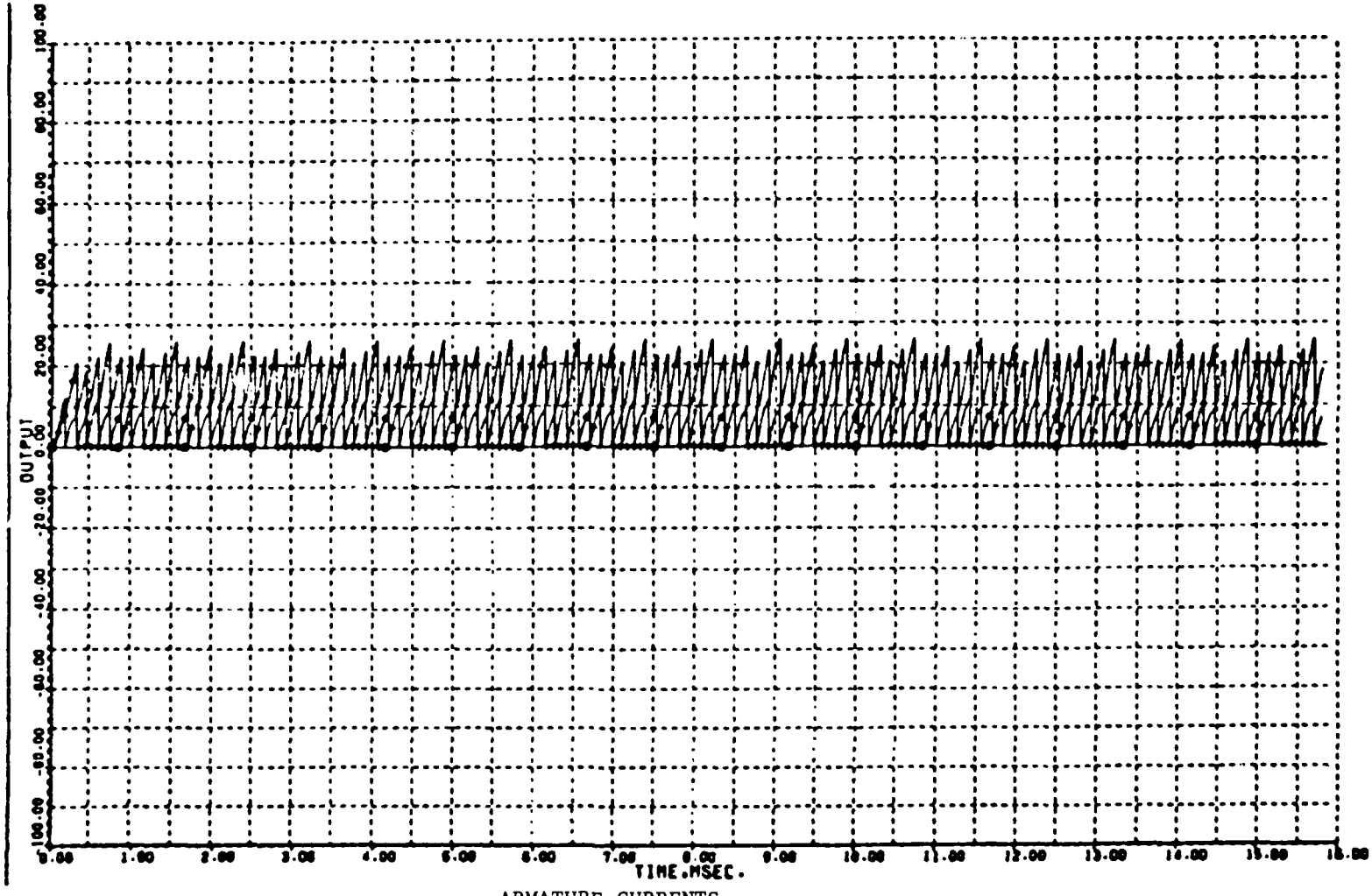

VSCF

ARMATURE CURRENTS
CONSTANT AMPLITUDE

FIGURE B-15

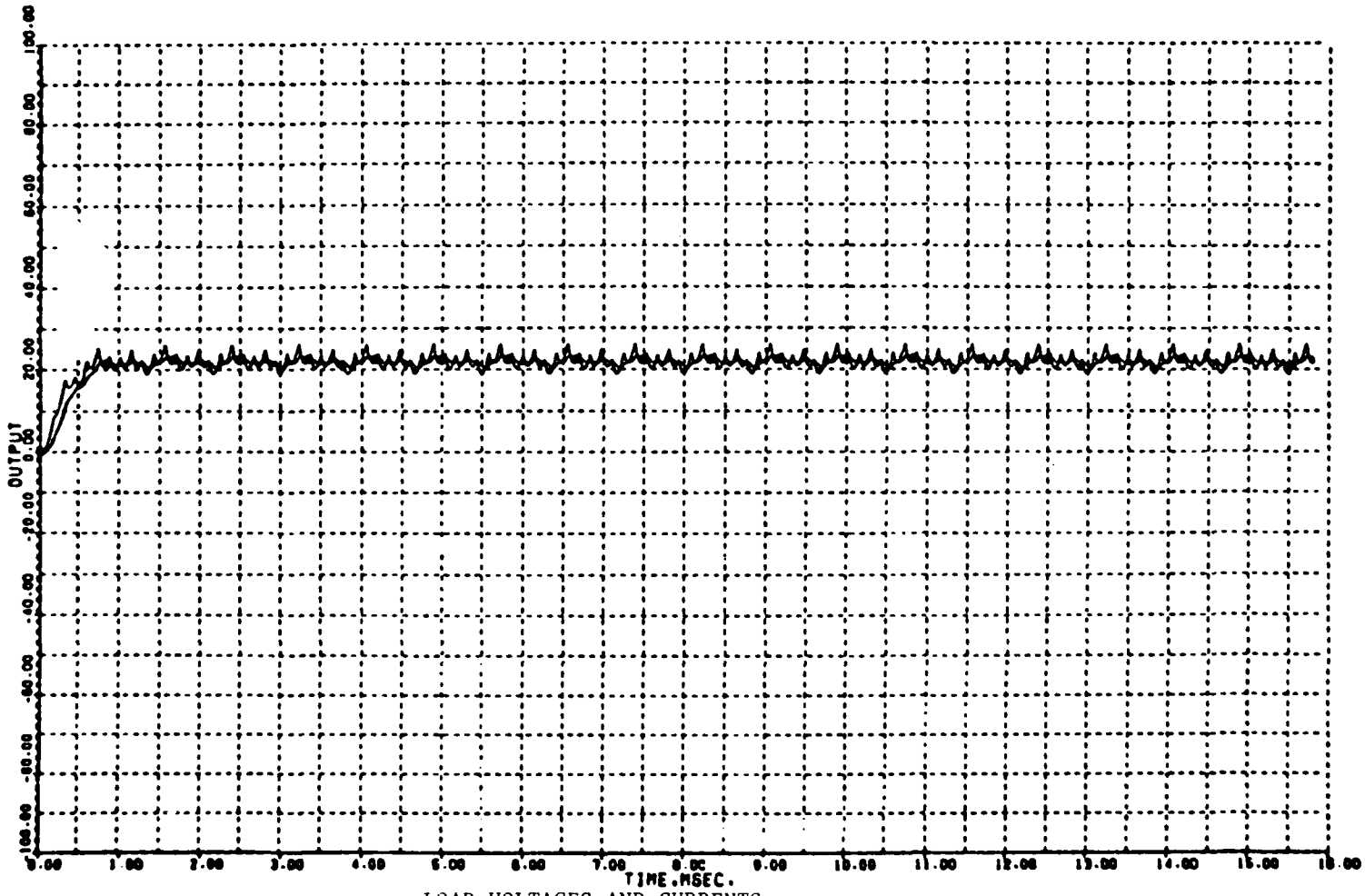

VSCF SYSTEM

LOAD VOLTAGES AND CURRENTS
CONSTANT AMPLITUDE

FIGURE B-15 (CONT'D)

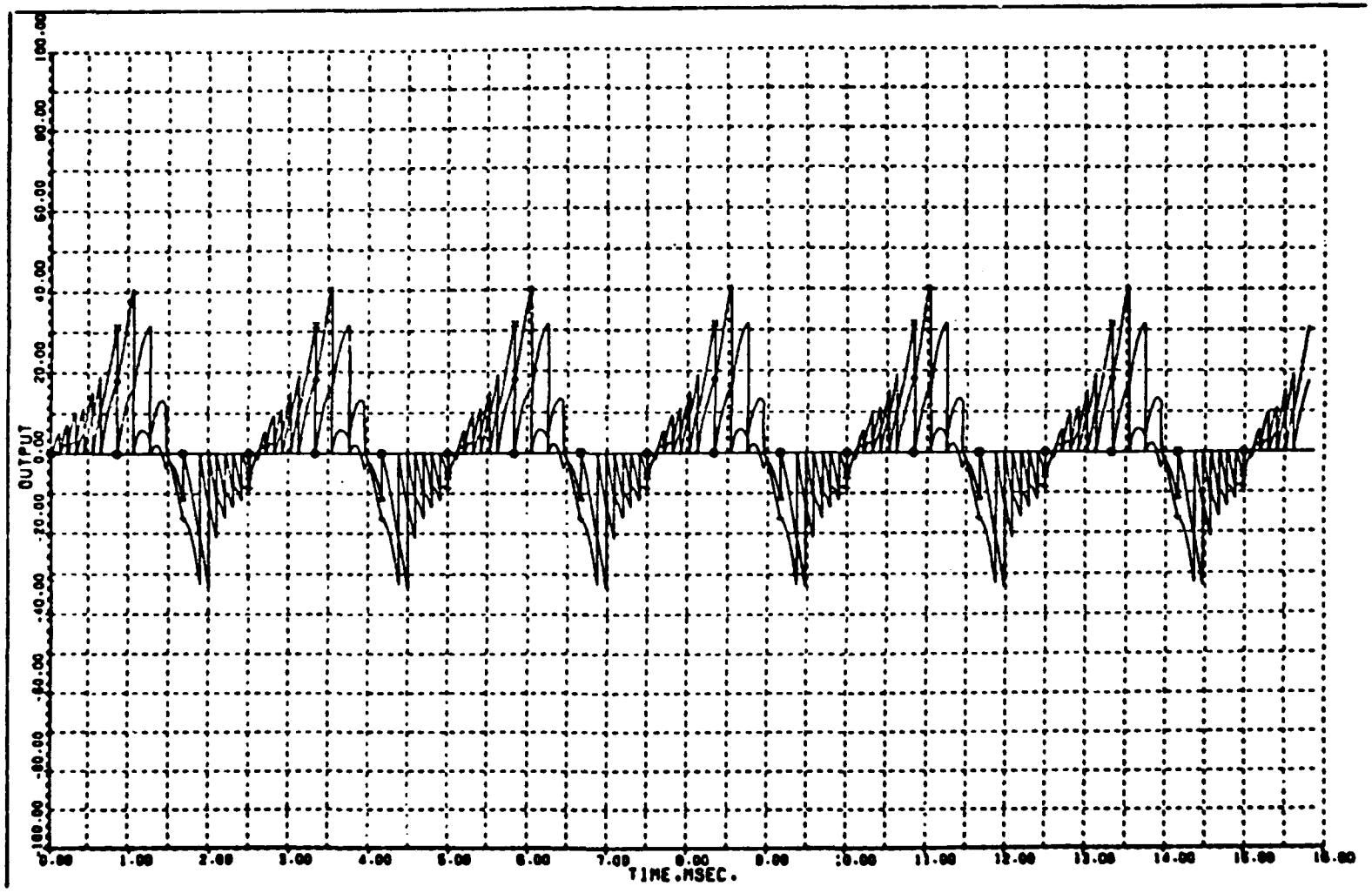

VSCF

ARMATURE CURRENTS
1.0 PU TO 2.0 PU AT .8 LAGGING PF

FIGURE B-16

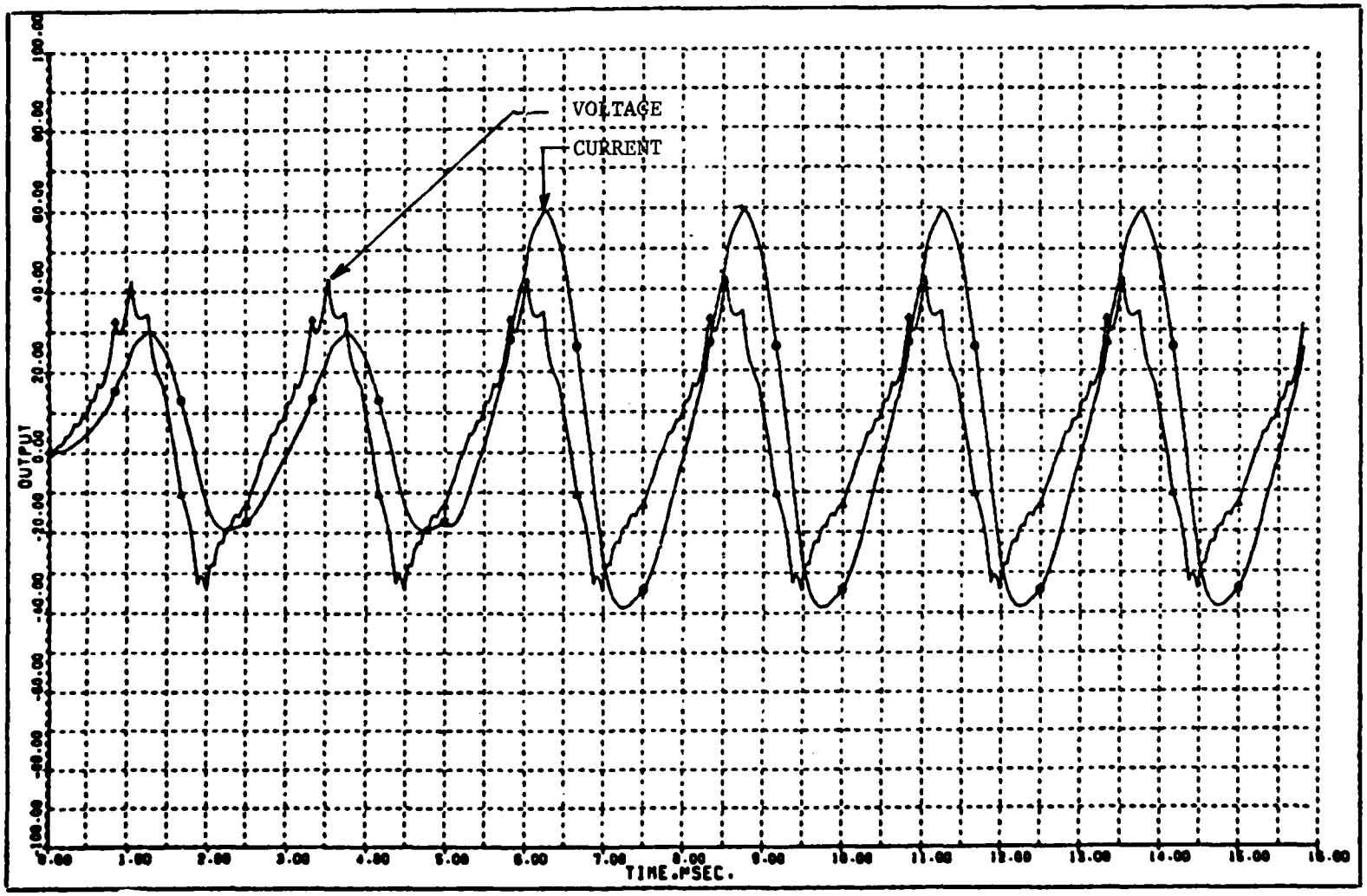

VSCF SYSTEM

LOAD VOLTAGE AND CURRENT
1.0 PU TO 2.0 AT .8 LAGGING PF

FIGURE B-16 (CONT'D)

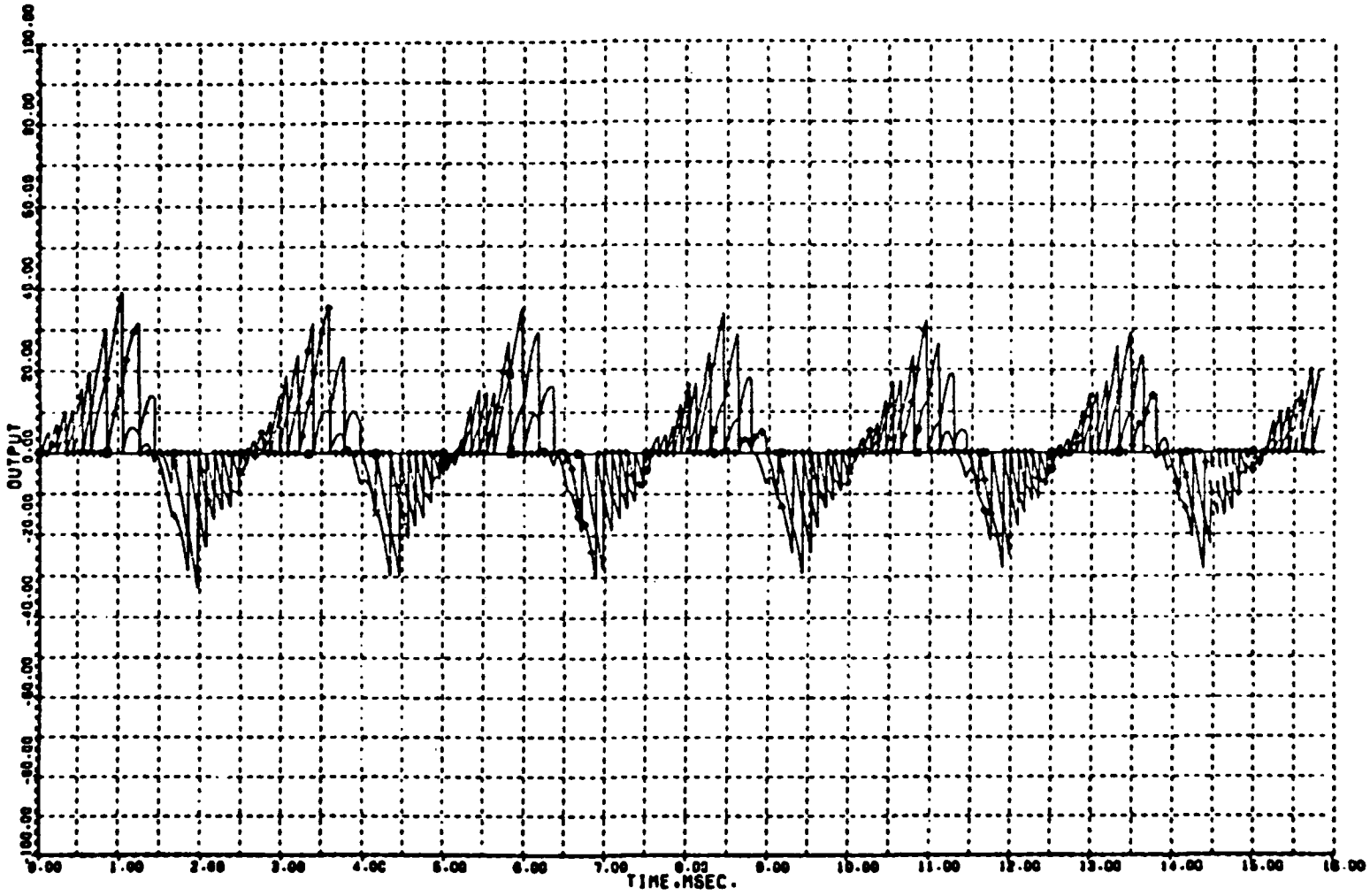

VSCF SYSTEM

ARMATURE CURRENTS
FREQUENCY 7500 TO 8500

FIGURE B-17

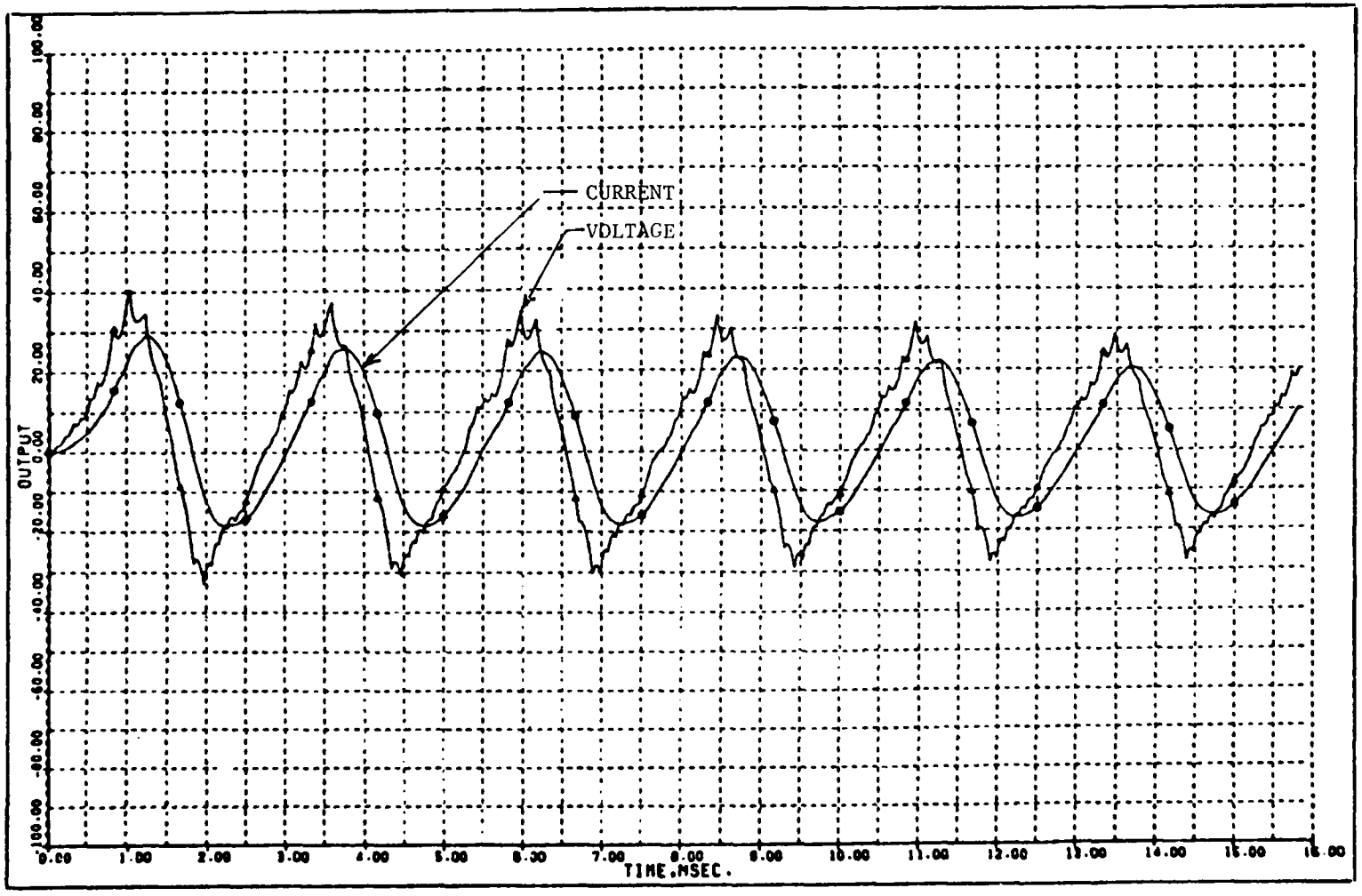

VSCF SYSTEM

LOAD VOLTAGE AND CURRENT
FREQUENCY 7500 TO 8500

FIGURE B-17 (CONT'D)

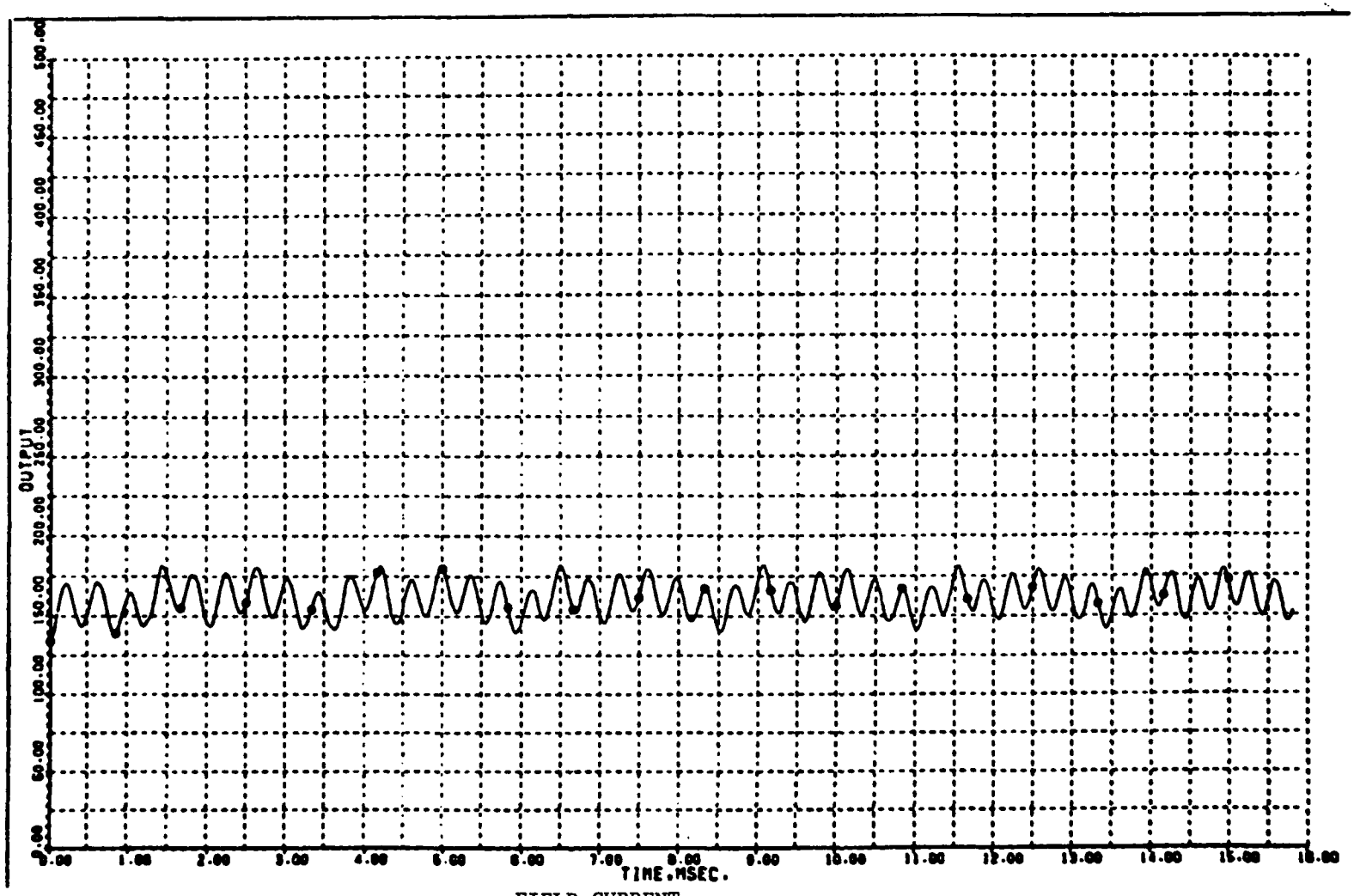

VSCF SYSTEM

FIELD CURRENT
FREQUENCY 7500 TO 8500

FIGURE B-17 (CONT'D)

FRAME NUMBER = 1.

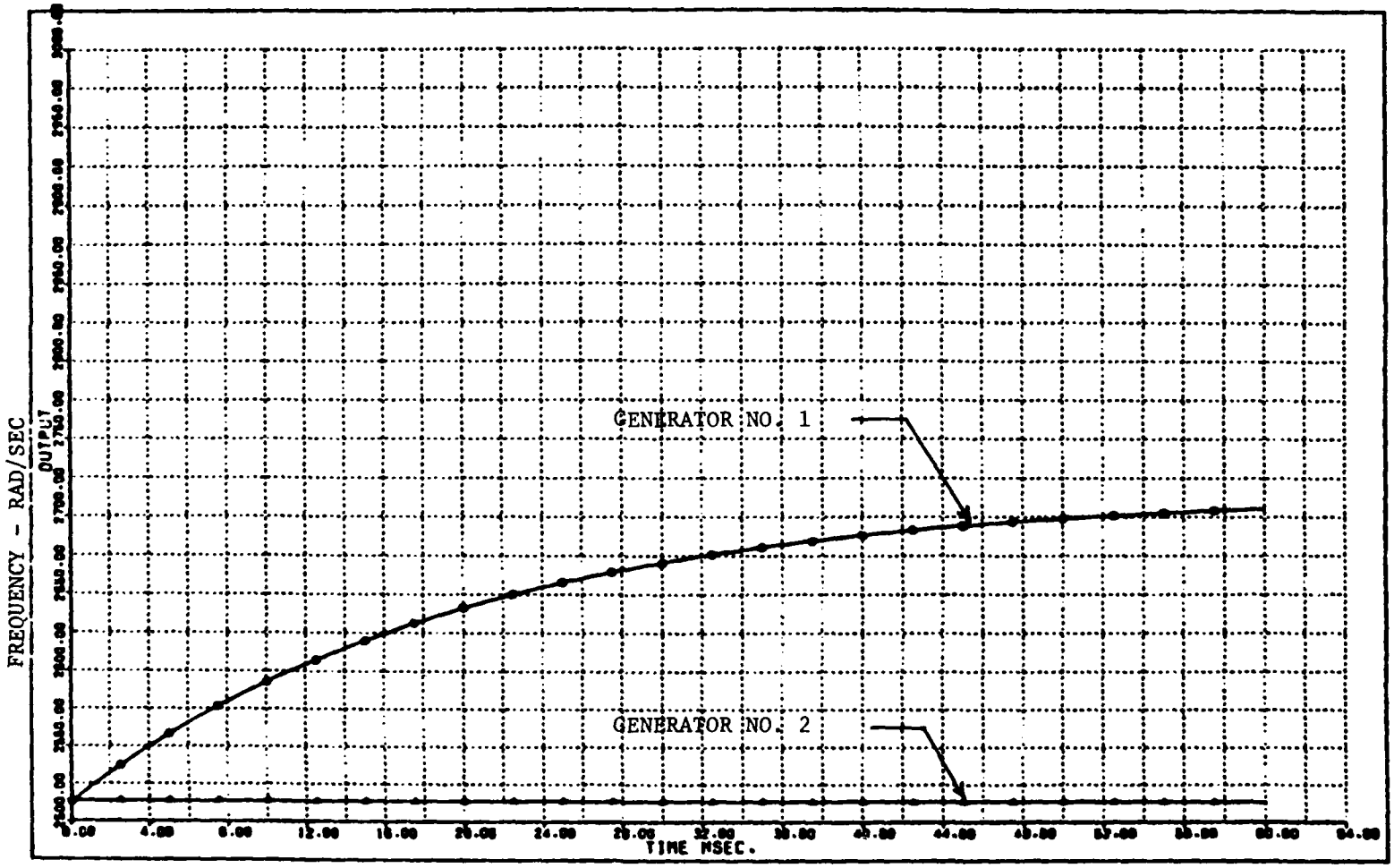

FIGURE B-18a

GENERATOR FREQUENCY FOR STEP CHANGE IN CSD SHAFT TORQUE

FRAME NUMBER = 2.

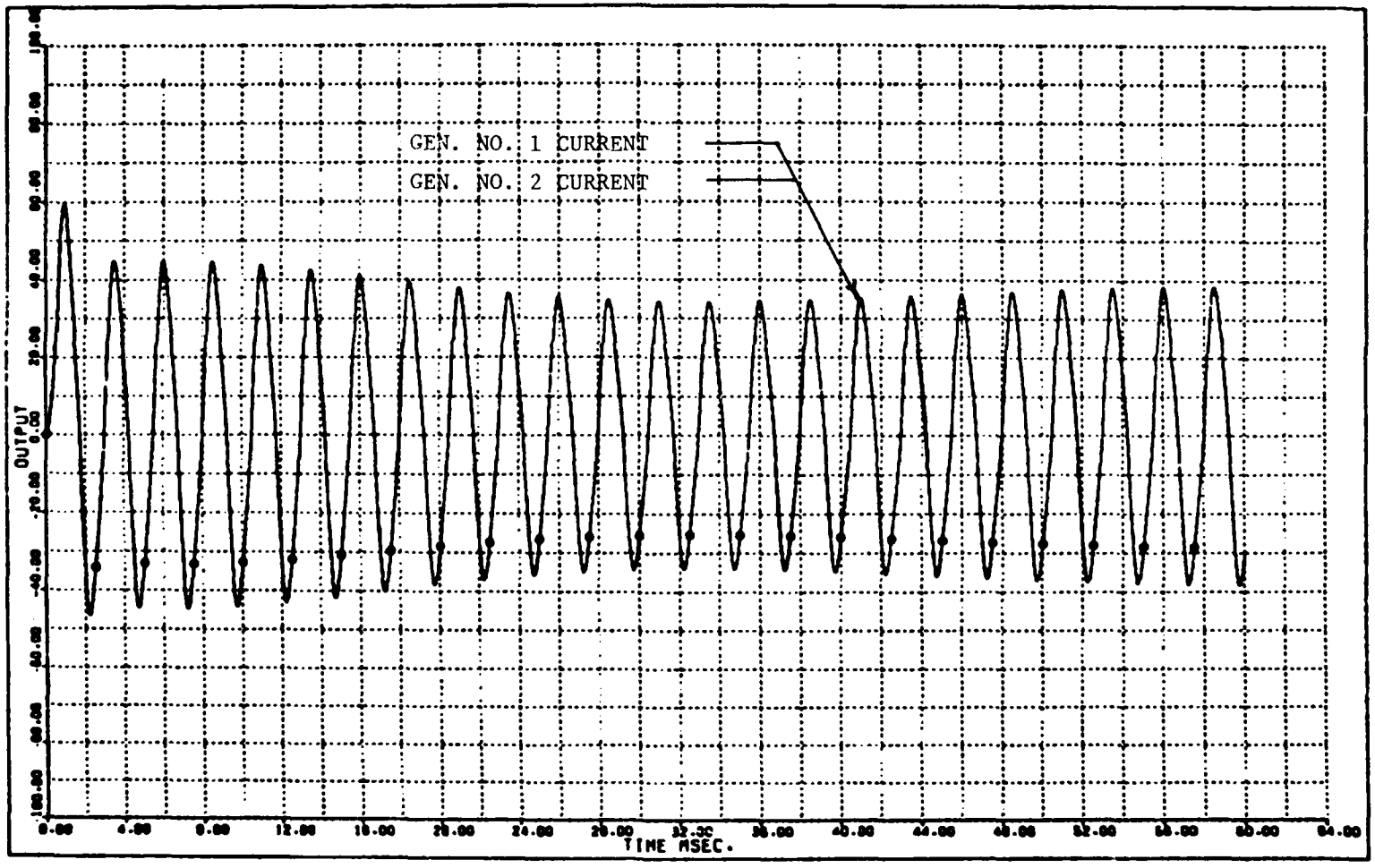

OUTPUT CURRENT

FIGURE B-18b

GENERATOR CURRENT FOR STEP CHANGE IN CSD SHAFT TORQUE

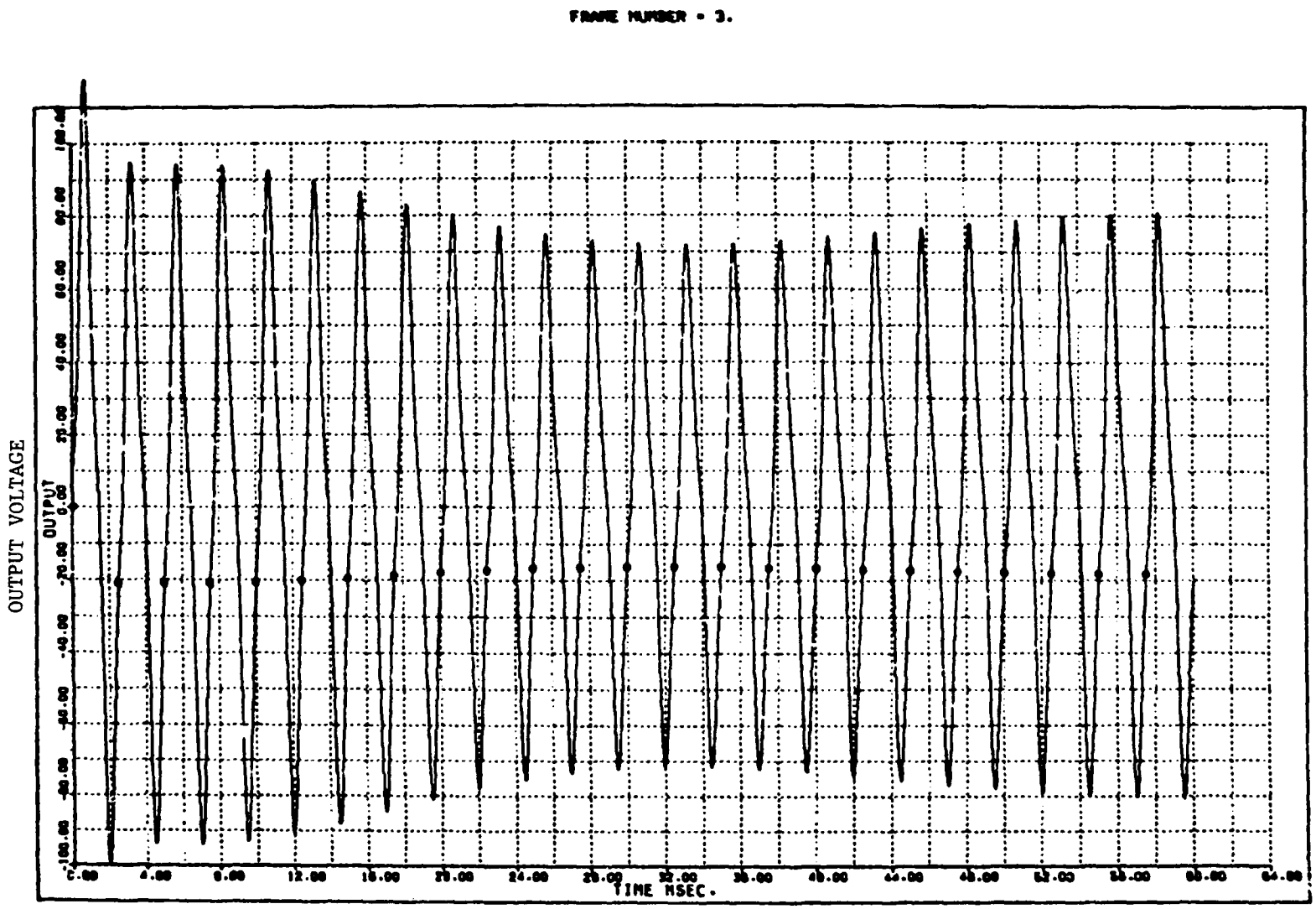

FIGURE B-18c

LOAD VOLTAGE FOR STEP CHANGE IN CSD SHAFT TORQUE

LIST OF ABBREVIATIONS

AMUX	Avionics Multiplexing
APU	Auxiliary Power Unit
BC	Bus Controller
BCU	Bus Control Unit
BIT	Built-In-Test
CFG	Constant Frequency Generator
CITS	Central Integrated Test System
CSD	Constant Speed Drive
DAIS	Digital Avionic Information System
EMUX	Electrical Multiplexing
F/O	Fiber Optic
GCU	Generator Control Unit
HVDC	High Voltage Direct Current
IDG	Integrate Drive Generator
ILMC	Integrated Load Management Center
ISD	Integrated Starter Drive
JFS	Jet Fuel Starter
LCC	Life Cycle Cost
LMC	Load Management Center
MUX/DEMUX	Multiplex-Demultiplex (Universal) Terminal
NDRO	Non Destruct Read Only
PDS	Power Distribution System
PMG	Permanent Magnet Generator
RCCB	Remote Control Circuit Breaker
SCU	Standby Control Unit
SSPC	Solid State Power Controller
TSP	Twisted Shielded Pair
VSCF	Variable Speed Constant Frequency
UT	Universal Terminal

☆U.S.Government Printing Office: 1981 — 757-002/549