AD-A093 923 NAVAL WEAPONS SUPPORT CENTER CRANE IN F/G 17/2
FLEET RELIABILITY ASSESSMENT PROGRAM. VOLUME 2C. EQUIPMENT REPO--ETC(U)
SEP 79

UNCLASSIFIED NL

1 of 1
AD A093923

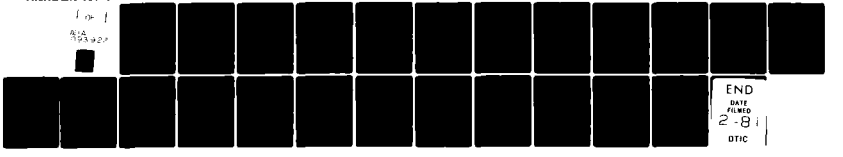

END
DATE FILMED
2-81
DTIC

FINAL REPORT. VOLUME 2C

Approved for public release; distribution unlimited

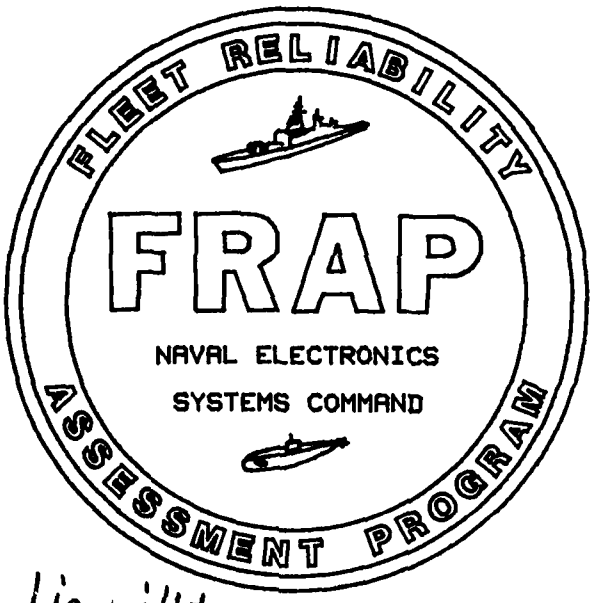

FLEET RELIABILITY ASSESSMENT PROGRAM

FRAP

NAVAL ELECTRONICS SYSTEMS COMMAND

AD A093923

Fleet liability ... gram. ...

EQUIPMENT REPORT

CV-3333/U VOCODER.

JAN 19 1981

A

NAVAL WEAPONS SUPPORT CENTER

CRANE, INDIANA

DDC FILE COPY

Published by the direction of Commander Naval Electronics Systems Command

SEPTEMBER 1979

409

80 7 16 019

SECURITY CLASSIFICATION OF THIS PAGE (When Data Entered)

REPORT DOCUMENTATION PAGE		READ INSTRUCTIONS BEFORE COMPLETING FORM
1. REPORT NUMBER	2. GOVT ACCESSION NO.	3. RECIPIENT'S CATALOG NUMBER
4. TITLE (and Subtitle) Final Report Volume 2C [illegible] Fleet Reliability Assessment [illegible] Equipment Report CV-3333/4 VOCODER		5. TYPE OF REPORT & PERIOD COVERED
		6. PERFORMING ORG. REPORT NUMBER
7. AUTHOR(s) NAVAL WEAPONS SUPPORT CENTER CRANE		8. CONTRACT OR GRANT NUMBER(s) [illegible]
9. PERFORMING ORGANIZATION NAME AND ADDRESS NAVAL WEAPONS SUPPORT CENTER CRANE C.O. NAVAL WEAPONS SUPPORT CENTER CRANE, INDIANA 47522 AHn 3064		10. PROGRAM ELEMENT, PROJECT, TASK AREA & WORK UNIT NUMBERS
11. CONTROLLING OFFICE NAME AND ADDRESS NAVAL ELECTRONIC SYSTEMS COMMAND WASHINGTON D.C. AHn 4702		12. REPORT DATE
		13. NUMBER OF PAGES
14. MONITORING AGENCY NAME & ADDRESS (if different from Controlling Office)		15. SECURITY CLASS. (of this report)
		15a. DECLASSIFICATION/DOWNGRADING SCHEDULE

16. DISTRIBUTION STATEMENT (of this Report)

Approved for public release distribution [illegible] ~~Contains test and evaluation data~~ Other requests ~~for this document [illegible] referred to~~ NAVAL Electronic Systems Command Code 470.

17. DISTRIBUTION STATEMENT (of the abstract entered in Block 20, if different from Report)

18. SUPPLEMENTARY NOTES

19. KEY WORDS (Continue on reverse side if necessary and identify by block number)

20. ABSTRACT (Continue on reverse side if necessary and identify by block number)

The report contains an assessment of CV-3333/4 Vocoder reliability performance observed on 22 platforms. From approximately June 1975 thru March of 1979 2 failures occurred during [illegible] operating hours. The [illegible]

DD FORM 1 JAN 73 1473 EDITION OF 1 NOV 65 IS OBSOLETE
S/N 0102-LF-014-6601

SECURITY CLASSIFICATION OF THIS PAGE (When Data Entered)

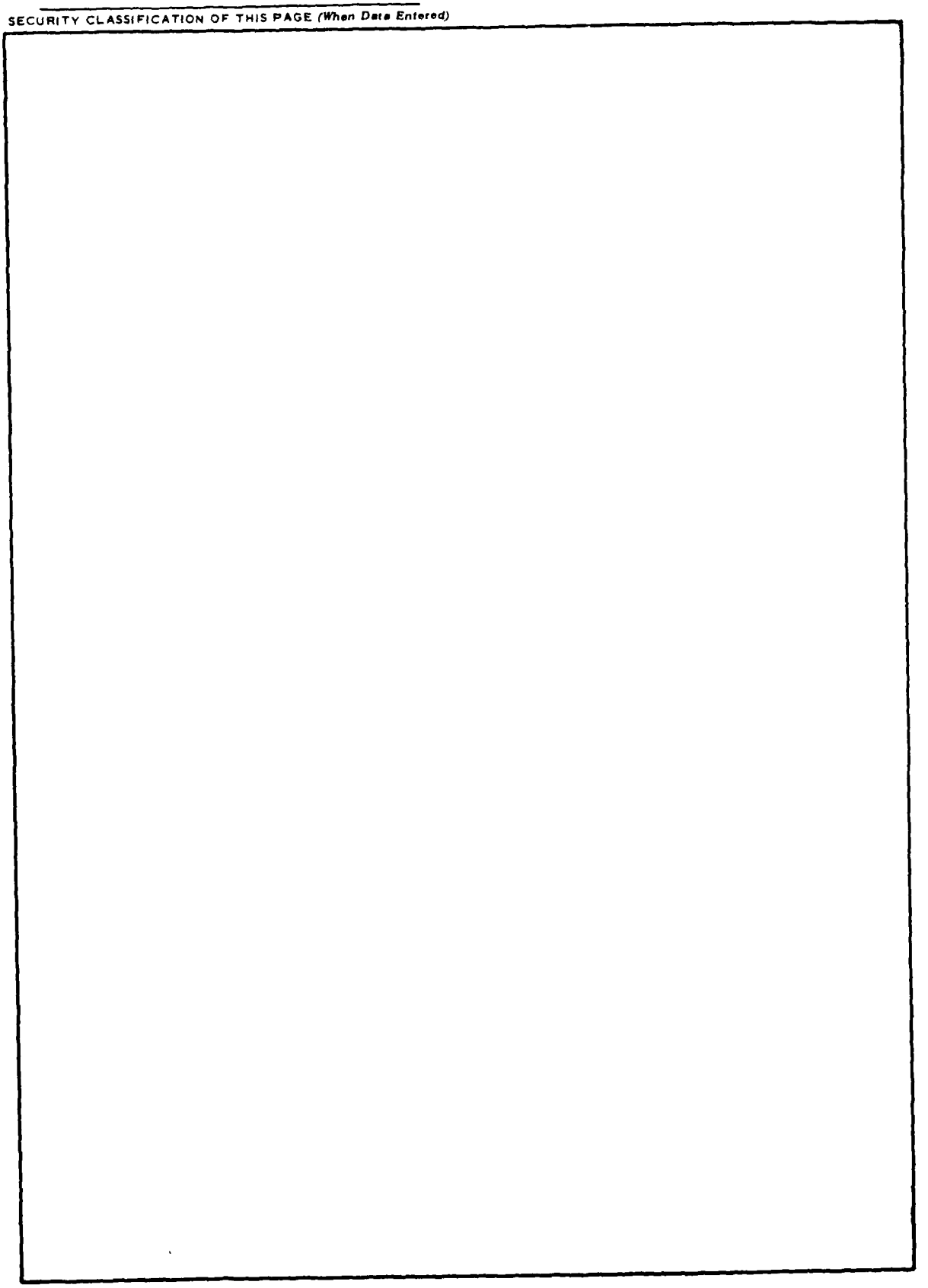

INSTRUCTIONS FOR PREPARATION OF REPORT DOCUMENTATION PAGE

RESPONSIBILITY. The controlling DoD office will be responsible for completion of the Report Documentation Page, DD Form 1473, in all technical reports prepared by or for DoD organizations.

CLASSIFICATION. Since this Report Documentation Page, DD Form 1473, is used in preparing announcements, bibliographies, and data banks, it should be unclassified if possible. If a classification is required, identify the classified items on the page by the appropriate symbol.

COMPLETION GUIDE

General. Make Blocks 1, 4, 5, 6, 7, 11, 13, 15, and 16 agree with the corresponding information on the report cover. Leave Blocks 2 and 3 blank.

Block 1. Report Number. Enter the unique alphanumeric report number shown on the cover.

Block 2. Government Accession No. Leave Blank. This space is for use by the Defense Documentation Center.

Block 3. Recipient's Catalog Number. Leave blank. This space is for the use of the report recipient to assist in future retrieval of the document.

Block 4. Title and Subtitle. Enter the title in all capital letters exactly as it appears on the publication. Titles should be unclassified whenever possible. Write out the English equivalent for Greek letters and mathematical symbols in the title *(see "Abstracting Scientific and Technical Reports of Defense-sponsored RDT E," AD-667 000)*. If the report has a subtitle, this subtitle should follow the main title, be separated by a comma or semicolon if appropriate, and be initially capitalized. If a publication has a title in a foreign language, translate the title into English and follow the English translation with the title in the original language. Make every effort to simplify the title before publication.

Block 5. Type of Report and Period Covered. Indicate here whether report is interim, final, etc., and, if applicable, inclusive dates of period covered, such as the life of a contract covered in a final contractor report.

Block 6. Performing Organization Report Number. Only numbers other than the official report number shown in Block 1, such as series numbers for in-house reports or a contractor grantee number assigned by him, will be placed in this space. If no such numbers are used, leave this space blank.

Block 7. Author(s). Include corresponding information from the report cover. Give the name(s) of the author(s) in conventional order *(for example, John R. Doe or, if author prefers, J. Robert Doe)*. In addition, list the affiliation of an author if it differs from that of the performing organization.

Block 8. Contract or Grant Number(s). For a contractor or grantee report, enter the complete contract or grant number(s) under which the work reported was accomplished. Leave blank in in-house reports.

Block 9. Performing Organization Name and Address. For in-house reports enter the name and address, including office symbol, of the performing activity. For contractor or grantee reports enter the name and address of the contractor or grantee who prepared the report and identify the appropriate corporate division, school, laboratory, etc., of the author. List city, state, and ZIP Code.

Block 10. Program Element, Project, Task Area, and Work Unit Numbers. Enter here the number code from the applicable Department of Defense form, such as the DD Form 1498, "Research and Technology Work Unit Summary" or the DD Form 1634, "Research and Development Planning Summary," which identifies the program element, project, task area, and work unit or equivalent under which the work was authorized.

Block 11. Controlling Office Name and Address. Enter the full, official name and address, including office symbol, of the controlling office. *(Equates to funding/sponsoring agency. For definition see DoD Directive 5200.20, "Distribution Statements on Technical Documents.")*

Block 12. Report Date. Enter here the day, month, and year or month and year as shown on the cover.

Block 13. Number of Pages. Enter the total number of pages.

Block 14. Monitoring Agency Name and Address *(if different from Controlling Office)*. For use when the controlling or funding office does not directly administer a project, contract, or grant, but delegates the administrative responsibility to another organization.

Blocks 15 & 15a. Security Classification of the Report: Declassification/Downgrading Schedule of the Report. Enter in 15 the highest classification of the report. If appropriate, enter in 15a the declassification/downgrading schedule of the report, using the abbreviations for declassification/downgrading schedules listed in paragraph 4-207 of DoD 5200.1-R.

Block 16. Distribution Statement of the Report. Insert here the applicable distribution statement of the report from DoD Directive 5200.20, "Distribution Statements on Technical Documents."

Block 17. Distribution Statement *(of the abstract entered in Block 20, if different from the distribution statement of the report)*. Insert here the applicable distribution statement of the abstract from DoD Directive 5200.20, "Distribution Statements on Technical Documents."

Block 18. Supplementary Notes. Enter information not included elsewhere but useful, such as: Prepared in cooperation with . . . Translation of *(or by)* . . . Presented at conference of . . . To be published in . . .

Block 19. Key Words. Select terms or short phrases that identify the principal subjects covered in the report, and are sufficiently specific and precise to be used as index entries for cataloging, conforming to standard terminology. The DoD "Thesaurus of Engineering and Scientific Terms" *(TEST)*, AD-672 000, can be helpful.

Block 20. Abstract. The abstract should be a brief *(not to exceed 200 words)* factual summary of the most significant information contained in the report. If possible, the abstract of a classified report should be unclassified and the abstract to an unclassified report should consist of publicly releasable information. If the report contains a significant bibliography or literature survey, mention it here. For information on preparing abstracts see "Abstracting Scientific and Technical Reports of Defense-Sponsored RDT&E," AD-667 000.

Reproduction of the information or illustrations contained in this publication for other than military use is not permitted. The policy for military use reproduction is established for the Army in AR 380-5; for the Navy and Marine corps in OPNAVINST 5510.1b; and for the Air Force in Air Force Regulation 205-1.

LIST OF EFFECTIVE PAGES

Insert latest changed pages; dispose of superceded pages in accordance with applicable regulations.

NOTE: On a changed page, the portion of the text affected by the latest change is indicated by a vertical line (or other change symbol) in the outer margin of the page. Changes to illustrations are indicated by miniature pointing hands. Changes to wiring diagrams are indicated by shaded areas.

Total number of pages in this Volume is 21 consisting of the following:

PAGE NO.	*CHANGE NO.
Title	0
A	0
i to iv	0
1 to 15	0

A

* Zero in this column indicates an original page.

DEPARTMENT OF THE NAVY

NAVAL ELECTRONICS SYSTEMS COMMAND

PREPARED UNDER THE DIRECTION OF

W. WALLACE
RELIABILITY ENGINEERING BRANCH

REVIEWED BY

M.W. ROBBINS, Jr.
SYSTEMS EFFECTIVENESS DIVISION

APPROVED BY

L.K. VON PERBANDT
CAPTAIN, USN
DEP DIR LOGISTICS DIRECTORATE

RECORD OF CHANGES

CHANGE NO.	DATE	TITLE OR BRIEF DESCRIPTION	ENTERED BY

VOLUME 2C CV-3333/U

EQUIPMENT REPORT

TABLE OF CONTENTS

Section		Page
I	RESULTS	1
	1-1 RESULTS SUMMARY	1
	1-1.1 PROBLEMS	
II	SYSTEM DESCRIPTION	1
	2-1 GENERAL	1
	2-2 MISSION DESCRIPTION	1
	2-3 EQUIPMENT DESCRIPTION	4
III	SPECIFICATIONS	4
	3-1 RELIABILITY	4
	3-2 MAINTAINABILITY	4
	3-3 AVAILABILITY	6
IV	PROBLEMS	6
V	CORRECTIVE ACTIONS	6
VI	EQUIPMENT RELIABILITY MODEL	6
VII	ANALYSES	9
	7-1 RELIABILITY	9

LIST OF ILLUSTRATIONS

Figure	Title	Page
2-1	NARROW BAND SECURE VOICE SYSTEM	3
2-2	CV-3333/U SIMPLIFIED FUNCTIONAL DIAGRAM	5
6-1	EQUIPMENT/O-Level Reliability Block Diagram for CV-3333/U [WRA 31]	8

LIST OF TABLES

TABLE 1-1	DATA SUMMARY FOR CV-3333/U	2

VOLUME 2C CV-3333 EQUIPMENT REPORT

SECTION I - RESULTS

1-1 RESULTS SUMMARY

Between July 1978 and June 1979, FRAP conducted a field study on the CV-3333 Audio-Digital Converter (VOCODER). A total of 47,677 operating hours were accumulated on 22 systems which had been equipped with Elapsed Time Meters by FRAP team members. A total of 2 failures (one equipment failure) were reported for an observed equipment MTBF of 47,677 hours. See Table 1-1 for a summary of RMA results.

1-1.1 PROBLEMS

No problems were identified with the CV-3333 itself, but an interface problem was discovered concerning remote push-to-talk (PTT) handsets. This involved the PTT signaling and resulted in a modification to the A6 module to include a strap option for the TA-840 handset.

SECTION II - SYSTEM DESCRIPTION

2-1 GENERAL

The CV-3333/U Audio-Digital Converter (VOCODER) is a solid state, all digital voice analyzer-data converter which provides digitized speech output at 2400 baud (bits/second). Voice input is processed and converted into a serial Non-Return to Zero (NRZ) bit stream which can then be encrypted and/or combined with other data streams for transmission. At the distant end, the bit stream is converted back into intelligible audio and delivered to a telephone style handset.

The unit incorporates a self-test mode which exercises major components of the equipment and gives an illuminated GO/NO-GO indication. A loopback mode allows the complete send/receive channel, including radios, interfaces, crypto and the like, to be fully exercised as a confidence test.

2-2 MISSION DESCRIPTION

The CV-3333/U as installed in the Fleet are an integral part of the Shipboard Fleet Satellite Communications Narrow Band Secure Voice System. In this application, the CV-3333/U is used with the ON-143(V) Interconnecting group and the KG-36-4 cryptographic machine to produce the encyphered bit stream which is then transmitted by the AN/WSC-3 Satellite Communications Set. If the installation is solely for secure voice, the ON-143(V)4 is used with the CV-3333. Figure 2-1 shows this configuration. If NAVMACS A+ or SSIXS share the AN/WSC-3 with the CV-3333, the ON-143(V)4 and ON-143(V)5 are used respectively.

The Narrow Band Secure Voice system provides long range ship to ship and ship to shore communications to Fleet users on a shared channel basis. Access and coordination are controlled by the responsible Naval Communications Station in the area of the satellite's footprint.

LEGEND

1. OPER = OPERATIONAL *
2. EQUIP = EQUIPMENT *
3. PARTS = PARTS REPLACEMENT *

TABLE 1-1. DATA SUMMARY FOR CV-3333.

PARAMETER	OPER	EQUIP	PARTS
OPERATIONAL			
Calendar Hours	111,624	111,624	111,624
Operating Hours	47,677	47,677	47,677
Duty Cycle	0.427	0.427	0.427
Sample Size	22	22	22
RELIABILITY			
Number of Failures	2	1	1
Time Between Failures-Mean	23,838	47,677	47,677
Time Between Failures-Median	16,524	33,040	33,040
Distribution	---	---	---
MAINTAINABILITY			
Total Repair Time	33	13	13
Number of Repairs	2	1	1
Time to Repair-Mean	16.5	13	13
Time to Repair-Median	---	---	---
Distribution	---	---	---
Total Down Time	240	168	168
Repairs (or Maint. Act.)	---	---	---
Down Time-Mean	120	168	168
Down Time-Median	---	---	---
Distribution	---	---	---
AVAILABILITY			
Inherent	0.9993	0.9997	0.9997
Observed-Mean	---	---	---
Observed-Median	---	---	---
Effective	0.9949	0.9965	0.9965

* Reference Volume 1, Paragraph 3-4
NOTE: All Time Units Are In Hours

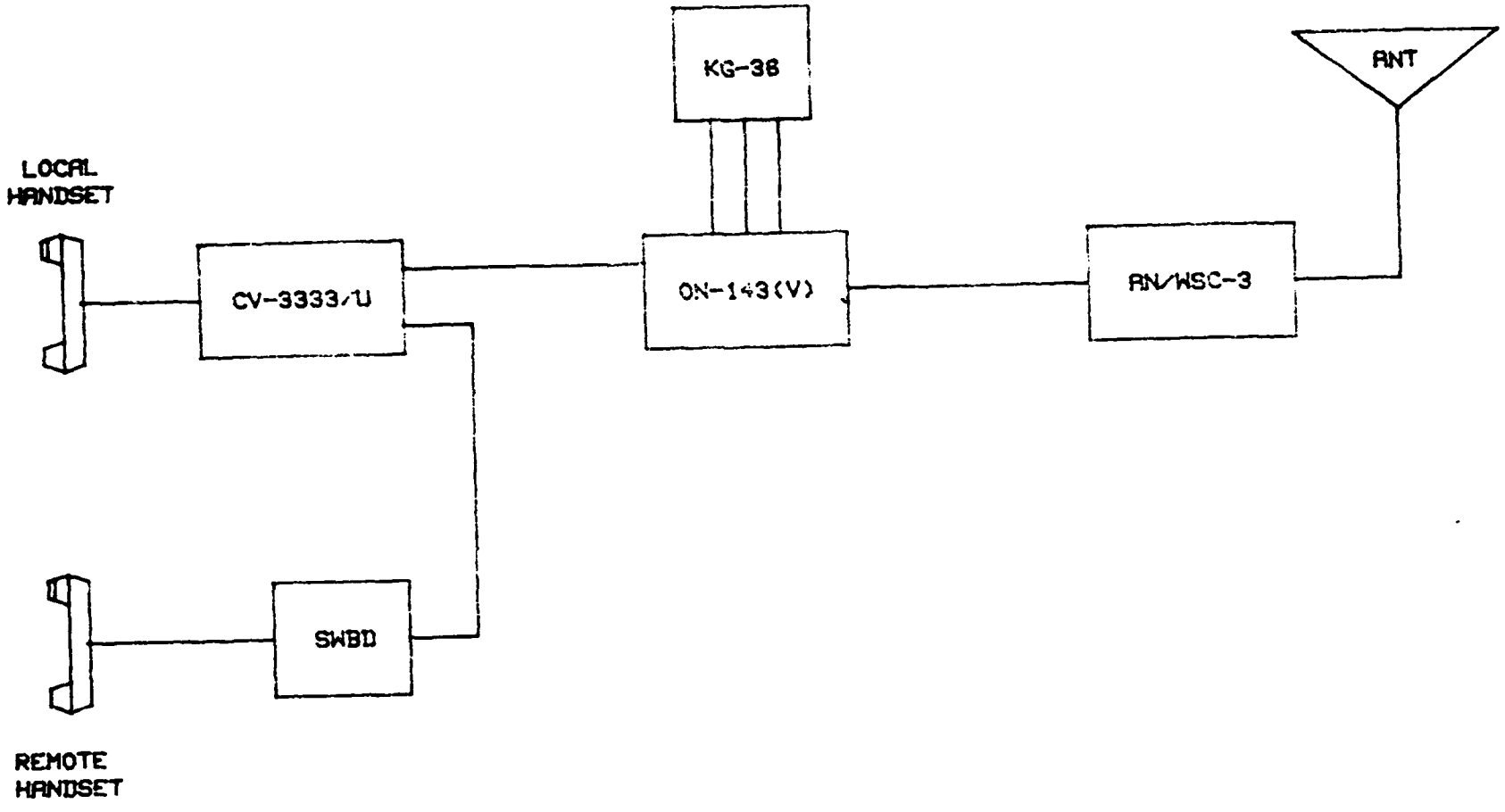

FIGURE 2-1. NARROW BAND SECURE VOICE SYSTEM

2-3 EQUIPMENT DESCRIPTION

The CV-3333 is a single self-contained box needing only power and hook-up to the communications channels to function. In most installations, an external clock is used to synchronize system timing. Internally, the CV-3333 is divided into send (analyzer) and receive (synthesizer) sections which share a common power supply. These two sections are further subdivided into replaceable modules. Figure 2-2 shows a simplified functional diagram for the unit.

Incoming speech first passes through the analog to digital converter in module A5 where it is filtered, normalized (adjusted to a standard power level), and digitized. The information in the resulting bit stream is analyzed by modules A7 thru A13, which function under the timing and control of module A6 to compress the bandwidth of the input speech. The bit stream then exits the unit through module A6, which contains the voltage level conversion and interface circuitry. During self-test, module A7 originates the test pattern used to exercise the transmit portions of the unit.

Incoming 2400 baud data from the distant end enters the unit through module A4, the incoming interface and level converter. Under the timing and control of module A4, modules A1 thru A3 perform the inverse of the analysis/bandwidth compression process. In this process, speech is synthesized (built up) from harmonics which have been generated in accordance with the pitch information coded into the bit stream. These harmonics are weighted, summed and combined with a controlled noise source (to allow generation of sounds like the letter "H"). The composite analog signal passes through the A5 module where it is filtered and amplified to the proper power level.

The reconstructed audio can be heard on the handset at the unit's front panel or via a remote handset. The resulting speech is quite understandable and the originator's vocal characteristics are carried through sufficiently so as to be readily identifiable. During self-test, the A4 module produces the test pattern for the receive circuitry.

SECTION III - SPECIFICATIONS

3-1 RELIABILITY

The specified MTBF for the CV-3333/U is 2000 hours (Theta$_0$ as defined by MIL-STD-781) as called out in the production contract.

3-2 MAINTAINABILITY

The specified equipment repair time (ERT) is (not to exceed) 20 minutes. Fault isolation is to be accomplished using the self-test functions and (in the case of the power supply) simple test instruments. Module repair is to be done at depot level. No intermediate level maintenance is required. Under Allowance Parts List (APL) number 62715620, CV-3333/U users are allowed one A4 module and one A13 module, plus various piece parts.

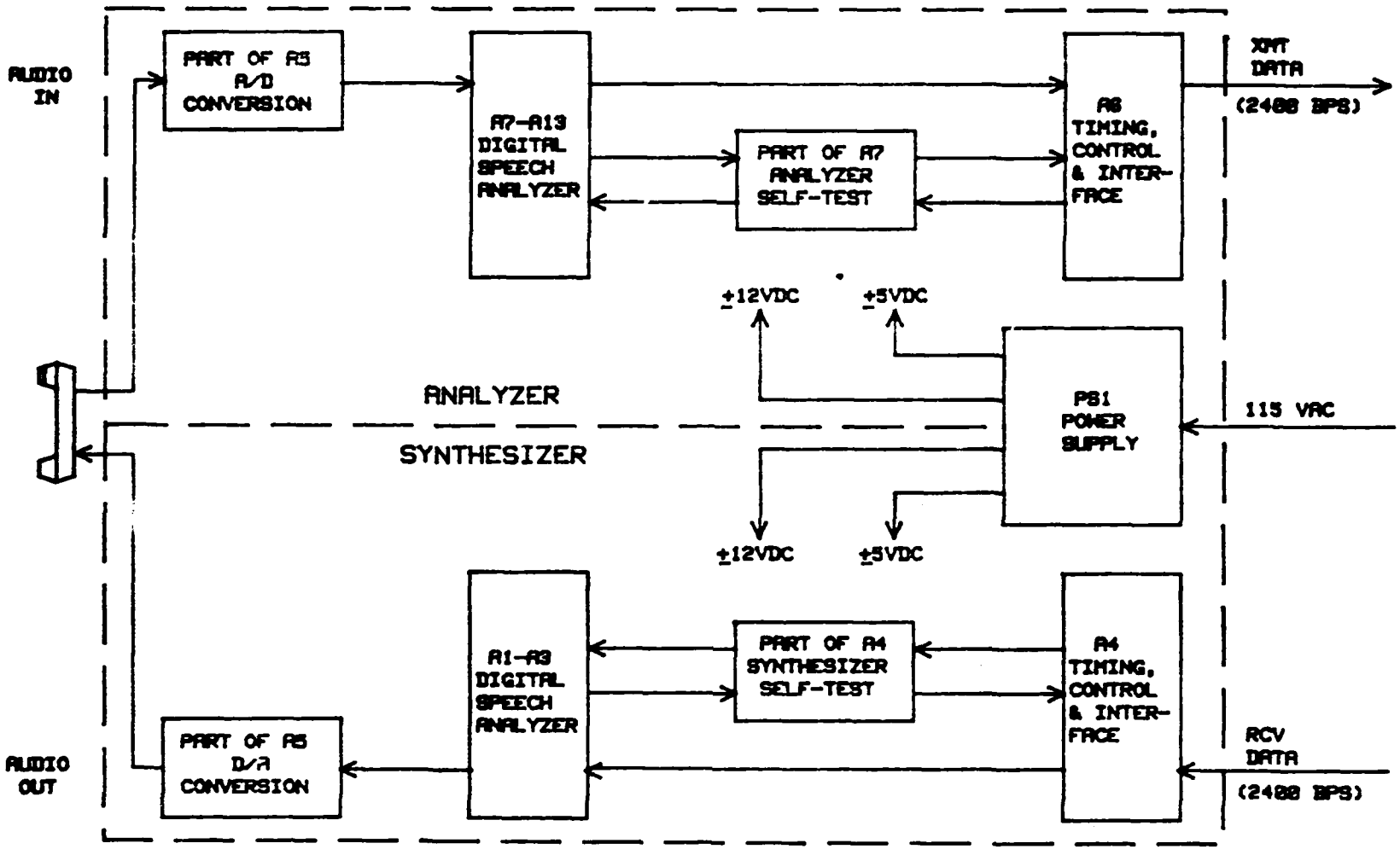

FIGURE 2-2. CV-3333/U SIMPLIFIED FUNCTIONAL DIAGRAM

3-3 AVAILABILITY

No formal Availability specifications are provided.

SECTION IV - PROBLEMS

The CV-3333/U does not contain an Elapsed Time Meter (ETM). The only other equipment in the Secure Voice system that has an ETM is the AN/WSC-3 Satellite Communications Set. However, this ETM does not accurately reflect the operating time of the CV-3333/U unit in that the AN/WSC-3 is often used to support other missions, i.e., NAVMACS A+ and SSIXS. This required FRAP to obtain and install outboard ETM's on participating platforms.

No equipment related problems were identified during the study period. An installation problem was discovered with Push-To-Talk (PTT) remote (red area) handsets, which affects only remote operation of the CV-3333/U. It was found that the TA-840 handset and the TA-790 handset differ in the manner in which the PTT signalling is accomplished. The TA-840 signals a "TALK" condition (which should activate the CV-3333 to transmit) by grounding the PTT keyline. The TA-790 signals a "TALK" condition by interconnecting the PTT keyline and the PTT keyline return.

SECTION V - CORRECTIVE ACTIONS

FRAP obtained PTT units which were installed on CV-3333/U units on participating platforms. These were wired to the power switch during the FRAP initial briefing and were removed during debriefing. The tolerance of Fleet users for this extra piece of hardware during the study period is appreciated. It is recommended that consideration be given to include an PTT on future procurements of the CV-3333.

The keyline signaling problem on remote handsets has been solved by a modification to the A6 module. With this modification, interface with the type of remote handset to be used is selected as a strap option.

SECTION VI - POINT-TO-POINT RELIABILITY MODEL

System reliability is defined as the probability of performing a specified function or mission under specified conditions for a specified time. Reliability models are word statements or block diagrams which represent the requirements for mission success. The FRAP equipment models are used to determine the achieved operational reliability and to assess the effect of ECPs and other corrective action upon system reliability. Maintenance Action Reports are compared against the model to determine if a reported failure results in a system failure, or if not a failure, then the degree of system degradation. In addition, the model is used in determining logistic support requirements.

Maintenance of Naval shipboard equipment is accomplished by replacement or repair of components at Organizational (O), Intermediate (I), or Depot (D) repair levels. Ships Maintenance and Material Management (3-M) normally collects organizational level repair data but not intermediate or depot level repair data. Using 3-M field data requires that the lowest components of the model be the lowest level reported by 3-M,

i.e., the O-level replaceable component. This O-level component can be a piece-part, printed circuit board, major assembly, or whatever is planned for the O-level maintenance concept.

Figure 6-1 is the reliability model block diagram for the CV-3333. The CV-3333 system is WRA 31.

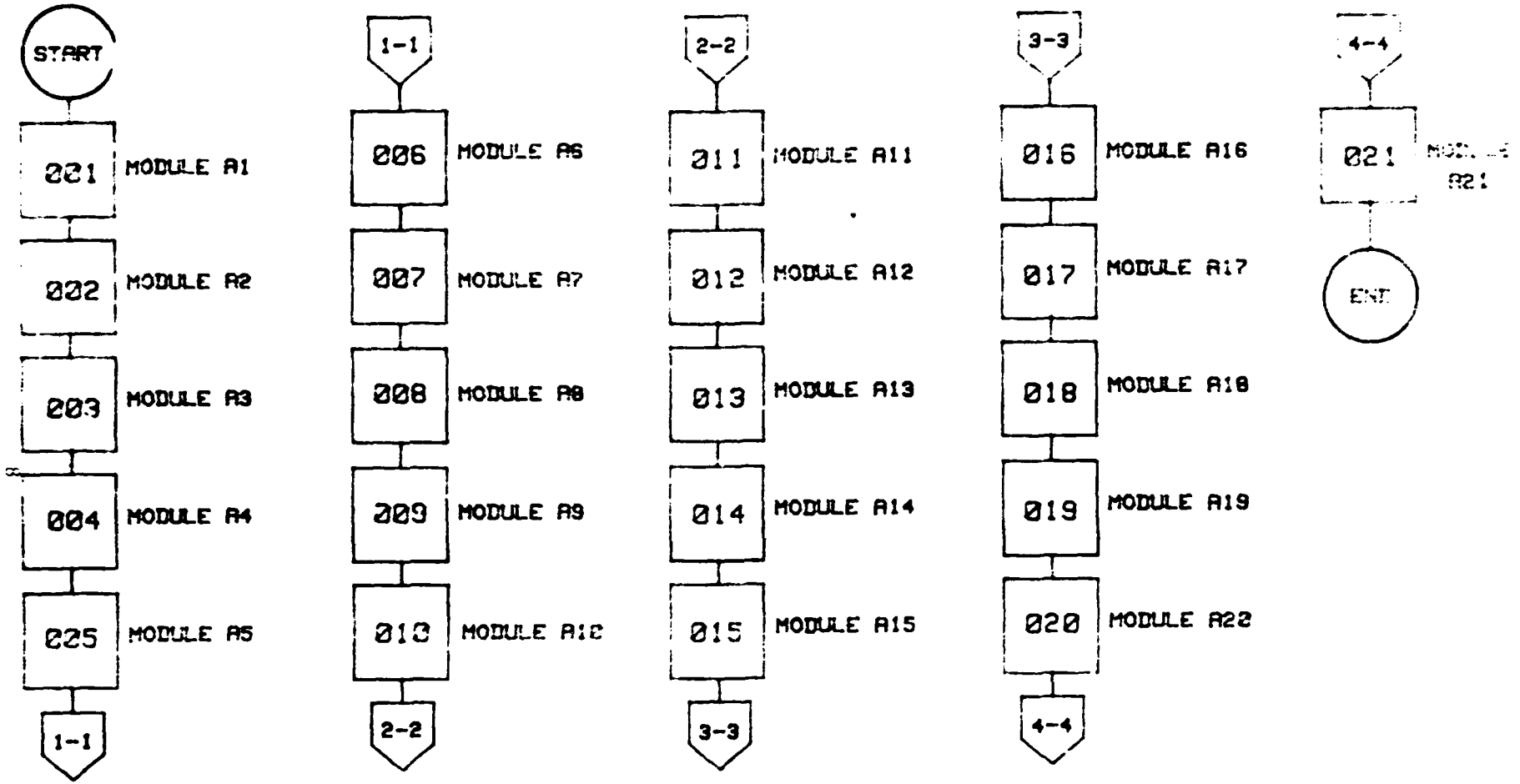

FIGURE 6-1

EQUIPMENT/O-Level Reliability Block Diagram for CV-3333/U (WRR 3:3

SECTION VII - ANALYSES

7-1 RELIABILITY

Only operational reliability analysis was performed since insufficient number of failures were encountered to justify maintainability and availability analysis.

FLEET RELIABILITY ASSESSMENT DATA

SYSTEM	SHIPNAME	DATE	FTM	FAILURE TYPE	OPERATE	FAILURE TIME	DUTY	WRA	OL1	OL2	OL3
CV3333	ALBANY	8215	0.	INITIAL	0.	0.	0.000	0	0	0	0
CV3333	ALBANY	8241	620.	CENSORED	620.	620.	.994	0	0	0	0
CV3333	ALBANY	8274	1340.	CENSORED	1340.	1340.	.886	0	0	0	0
CV3333	ALBANY	8334	2965.	CENSORED	2965.	2965.	1.004	0	0	0	0
CV3333	ALBANY	9003	3673.	CENSORED	3673.	3673.	1.000	0	0	0	0
CV3333	ALBANY	9078	5443.	CENSORED	5443.	5443.	.995	0	0	0	0
	NO INITIAL RECORD-FIRST RECORD USED										
CV3333	AYLWIN	8335	0.	CENSORED	0.	0.	0.000	0	0	0	0
CV3333	AYLWIN	8335	1.	FAILURE	1.	1.	0.000	31	6	0	0
CV3333	AYLWIN	8365	72.	CENSORED	72.	71.	.100	0	0	0	0
CV3333	AYLWIN	9031	185.	CENSORED	185.	184.	.126	0	0	0	0
CV3333	AYLWIN	9059	276.	CENSORED	276.	275.	.129	0	0	0	0
CV3333	AYLWIN	9090	399.	CENSORED	399.	398.	.139	0	0	0	0
CV3333	AYLWIN	9120	648.	CENSORED	648.	647.	.180	0	0	0	0
CV3333	BLUE RIDGE	8145	0.	INITIAL	0.	0.	0.000	0	0	0	0
CV3333	BLUE RIDGE	9047	4722.	CENSORED	4722.	4722.	.737	0	0	0	0
CV3333	CONSTELLATION	8164	0.	INITIAL	0.	0.	0.000	0	0	0	0
CV3333	CONSTELLATION	8275	567.	CENSORED	567.	567.	.213	0	0	0	0
CV3333	CONSTELLATION	8364	2699.	CENSORED	2699.	2699.	.562	0	0	0	0
CV3333	CONSTELLATION	9032	3630.	CENSORED	3630.	3630.	.649	0	0	0	0
CV3333	CONSTELLATION	9090	4962.	CENSORED	4962.	4962.	.710	0	0	0	0
CV3333	CONSTELLATION	9120	5582.	CENSORED	5582.	5582.	.725	0	0	0	0
CV3333	CORONADO	8223	0.	INITIAL	0.	0.	0.000	0	0	0	0
CV3333	CORONADO	8279	113.	CENSORED	113.	113.	.084	0	0	0	0
CV3333	CORONADO	8307	113.	CENSORED	113.	113.	.056	0	0	0	0
CV3333	CORONADO	9005	113.	CENSORED	113.	113.	.032	0	0	0	0
CV3333	CORONADO	9032	113.	CENSORED	113.	113.	.027	0	0	0	0
CV3333	CORONADO	9064	113.	CENSORED	113.	113.	.023	0	0	0	0
CV3333	CORONADO	9094	113.	CENSORED	113.	113.	.020	0	0	0	0
CV3333	CORONADO	9127	113.	CENSORED	113.	113.	.018	0	0	0	0
CV3333	CORONADO	9155	113.	CENSORED	113.	113.	.016	0	0	0	0
CV3333	DALE	8217	0.	INITIAL	0.	0.	0.000	0	0	0	0
CV3333	DEWEY	8298	0.	INITIAL	0.	0.	0.000	0	0	0	0
CV3333	DEWEY	8360	334.	CENSORED	334.	334.	.224	0	0	0	0
CV3333	DEWEY	9030	1145.	CENSORED	1145.	1145.	.492	0	0	0	0
CV3333	DEWEY	9058	1751.	CENSORED	1751.	1751.	.584	0	0	0	0
CV3333	DEWEY	9087	2066.	CENSORED	2066.	2066.	.559	0	0	0	0
CV3333	EISENHOWER	8205	0.	INITIAL	0.	0.	0.000	0	0	0	0
CV3333	EISENHOWER	8222	337.	CENSORED	337.	337.	.826	0	0	0	0
CV3333	EISENHOWER	9047	4770.	CENSORED	4770.	4770.	.960	0	0	0	0
CV3333	FLASHER	8332	3.	INITIAL	0.	0.	0.000	0	0	0	0
CV3333	FLASHER	8362	115.	CENSORED	112.	112.	.156	0	0	0	0
CV3333	FLASHER	9025	135.	CENSORED	132.	132.	.095	0	0	0	0
CV3333	FLASHER	9060	136.	CENSORED	133.	133.	.060	0	0	0	0
CV3333	FLASHER	9090	141.	CENSORED	138.	138.	.047	0	0	0	0
CV3333	FLASHER	9124	160.	FINAL	157.	157.	.042	0	0	0	0
CV3333	GUAM	8276	0.	INITIAL	0.	0.	0.000	0	0	0	0
CV3333	GUAM	8334	1047.	FAILURE	1047.	1047.	.752	0	0	0	0

FLEET RELIABILITY ASSESSMENT DATA

SYSTEM	SHIPNAME	DATE	FT#	FAILURE TYPE	OPERATE	FAILURE TIME	DUTY	#RA	OL1	OL2	OL3
CV3333	GUARDFISH	8145	0.	INITIAL	0.	0.	0.000	0	0	0	0
CV3333	GUARDFISH	9053	84.	CENSORED	84.	84.	.013	0	0	0	0
CV3333	GUARDFISH	9081	85.	FINAL	85.	85.	.012	0	0	0	0
CV3333	KINKAID	8268	5.	INITIAL	0.	0.	0.000	0	0	0	0
CV3333	KINKAID	9102	3485.	FINAL	3480.	3480.	.729	0	0	0	0
CV3333	LEAHY	8181	48.	INITIAL	0.	0.	0.000	0	0	0	0
CV3333	LEAHY	9061	3543.	FINAL	3542.	3542.	.590	0	0	0	0
NO INITIAL RECORD-FIRST RECORD USED											
CV3333	MULLINNIX	8299	0.	CENSORED	0.	0.	0.000	0	0	0	0
CV3333	MULLINNIX	8324	312.	CENSORED	312.	312.	.520	0	0	0	0
CV3333	MULLINNIX	8359	1177.	CENSORED	1177.	1177.	.817	0	0	0	0
CV3333	MULLINNIX	9020	1794.	CENSORED	1794.	1794.	.869	0	0	0	0
CV3333	MULLINNIX	9054	1840.	CENSORED	1840.	1840.	.639	0	0	0	0
CV3333	MULLINNIX	9095	1863.	CENSORED	1863.	1863.	.482	0	0	0	0
CV3333	MULLINNIX	9130	2233.	FINAL	2233.	2233.	.475	0	0	0	0
CV3333	NEW ORLEANS	8332	0.	INITIAL	0.	0.	0.000	0	0	0	0
CV3333	NEW ORLEANS	9066	598.	FINAL	598.	598.	.252	0	0	0	0
CV3333	PINTADO	8212	4.	INITIAL	0.	0.	0.000	0	0	0	0
CV3333	PINTADO	9092	23.	FINAL	19.	19.	.003	0	0	0	0
CV3333	PUGY	8244	0.	INITIAL	0.	0.	0.000	0	0	0	0
CV3333	PUGY	8305	151.	CENSORED	151.	151.	.103	0	0	0	0
CV3333	PUGY	9128	1532.	FINAL	1532.	1532.	.256	0	0	0	0
CV3333	PUGET SOUND	8242	0.	INITIAL	0.	0.	0.000	0	0	0	0
CV3333	PUGET SOUND	8272	2.	CENSORED	2.	2.	.003	0	0	0	0
CV3333	PUGET SOUND	8334	2.	CENSORED	2.	2.	.001	0	0	0	0
CV3333	PUGET SOUND	8363	2.	CENSORED	2.	2.	.001	0	0	0	0
CV3333	PUGET SOUND	9024	3.	CENSORED	3.	3.	.001	0	0	0	0
CV3333	RANGER	8164	0.	INITIAL	0.	0.	0.000	0	0	0	0
CV3333	RANGER	8256	2020.	CENSORED	2020.	2020.	.915	0	0	0	0
CV3333	RANGER	8277	2557.	CENSORED	2557.	2557.	.943	0	0	0	0
CV3333	RANGER	8334	3879.	CENSORED	3879.	3879.	.951	0	0	0	0
CV3333	RANGER	8363	4527.	CENSORED	4527.	4527.	.948	0	0	0	0
CV3333	RANGER	9045	5580.	CENSORED	5580.	5580.	.945	0	0	0	0
CV3333	SARATOGA	8201	0.	INITIAL	0.	0.	0.000	0	0	0	0
CV3333	SARATOGA	8213	144.	CENSORED	144.	144.	.500	0	0	0	0
CV3333	SARATOGA	8335	1681.	CENSORED	1681.	1681.	.523	0	0	0	0
CV3333	SARATOGA	9002	2471.	CENSORED	2471.	2471.	.620	0	0	0	0
CV3333	SARATOGA	9032	3007.	CENSORED	3007.	3007.	.639	0	0	0	0
CV3333	SEADRAGON	8237	0.	INITIAL	0.	0.	0.000	0	0	0	0
CV3333	SEADRAGON	8265	7.	CENSORED	7.	7.	.010	0	0	0	0
CV3333	SEADRAGON	8298	11.	CENSORED	11.	11.	.008	0	0	0	0
CV3333	SEADRAGON	8334	26.	CENSORED	26.	26.	.011	0	0	0	0
CV3333	SEADRAGON	8361	29.	CENSORED	29.	29.	.010	0	0	0	0
CV3333	SEADRAGON	9090	33.	CENSORED	33.	33.	.006	0	0	0	0
CV3333	SEADRAGON	9107	34.	FINAL	34.	34.	.006	0	0	0	0
CV3333	TWIRE	8220	0.	INITIAL	0.	0.	0.000	0	0	0	0
CV3333	TWIRE	8252	89.	CENSORED	89.	89.	.116	0	0	0	0
CV3333	TWIRE	8286	125.	CENSORED	125.	125.	.084	0	0	0	0
CV3333	TWIRE	8335	289.	CENSORED	289.	289.	.105	0	0	0	0
CV3333	TWIRE	8365	373.	CENSORED	373.	373.	.107	0	0	0	0

FLEET RELIABILITY ASSESSMENT DATA

SYSTEM	SHIPYARD	DATE	FTM	FAILURE TYPE	OPERATE	FAILURE TIME	DUTY	WRA	OL1	OL2	OL3
CV3333	VREELAND	8201	0.	INITIAL	0.	0.	0.000	0	0	0	0
CV3333	VREELAND	8232	89.	CENSORED	89.	89.	.120	0	0	0	0
CV3333	VREELAND	8310	252.	CENSORED	252.	252.	.096	0	0	0	0
CV3333	VREELAND	8330	374.	CENSORED	374.	374.	.121	0	0	0	0
CV3333	VREELAND	9006	962.	CENSORED	962.	962.	.241	0	0	0	0
CV3333	VREELAND	9031	1551.	CENSORED	1551.	1551.	.331	0	0	0	0
CV3333	VREELAND	9140	2643.	FINAL	2643.	2643.	.362	0	0	0	0

R E L I A B I L I T Y

CV3333 SYSTEM LEVEL

REMAINING SYS. CAP.	TIME TO FAIL	NO. FAILURES	NO. CENSORED
100.	1.0	1.	
	3.0		1.
	14.0		1.
	34.0		1.
	85.0		1.
	113.0		1.
	157.0		1.
	373.0		1.
	508.0		1.
	647.0		1.
100.	1047.0	1.	
	1532.0		1.
	2066.0		1.
	2233.0		1.
	2643.0		1.
	3007.0		1.
	3480.0		1.
	3542.0		1.
	4722.0		1.
	4770.0		1.
	5443.0		1.
	5580.0		1.
	5582.0		1.

EQUIPMENT OPERATING HOURS (O.H.) = 47677.0 CALENDAR HOURS(C.H.) = 111624.0 DUTY CYCLE (O.H./C.H.) = .427

NUMBER OF FAILURES = 2. OBSERVED FAILURE RATE/O.H. = .41949E-04

LESS THAN FOUR FAILURES THE EXPONENTIAL DISTRIBUTION IS ASSUMED

FOR THE ASSUMED DISTRIBUTION:

EST. MEAN = 23838.500. EST. MEDIAN = 16523.589. 90 PER CENT LCL FOR MEAN = 8958.0. 90 PER CENT UCL FOR MEAN = 89650.186

90 PERCENT UCL 89650.19 IS GREATER THAN 2000.00 HOURS. THEREFORE THE EQUIPMENT MEETS THE SPECIFICATIONS

R E L I A B I L I T Y

CV3333 O-LEVEL SUMMARY

WUC	O-LEVEL BLOCK NO.	O-LEVEL NOMENCLATURE	NUMBER FAILURES	LOWER 90 CONF LIM	MEAN	UPPER 90 CONF LIM	SPEC MTBF	OBSERVED FAILURE TIMES LOW	OBSERVED FAILURE TIMES HIGH	RELIAB PROBLEM
01	A	TIMING [illegible] INTERFACE	1.	12257.18	47677.00	452515.19	52632.00	1.00	1.00	NO

[illegible]

[illegible] SUMMARY FOR CV3333 PROBLEM AREAS

[illegible]	[illegible]	[illegible]	[illegible]	[illegible]	WHAT HAPPENED
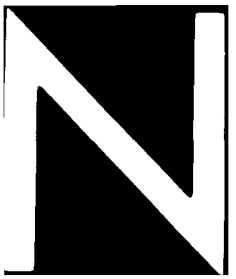
[illegible] PROBLEM AREAS [illegible] THIS SYSTEM