AD-A083 754 NATIONAL AVIATION FACILITIES EXPERIMENTAL CENTER ATL--ETC F/G 14/2
DEVELOPMENT OF AN AUTOMATED REMOTE COMMUNICATIONS AIR-GROUND (R--ETC(U)
APR 80 N J TALOTTA, A J REHMANN

UNCLASSIFIED FAA-NA-79-44 FAA-RD-79-125 NL

1 OF 2
AD A083754

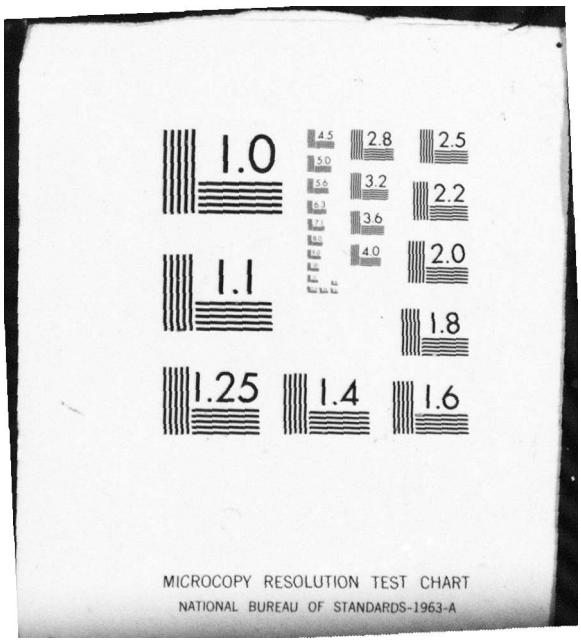
1.0
1.1
1.25
1.4
1.6
1.8
2.0
2.2
2.5
2.8
3.2
3.6
4.0
4.5
5.0
5.6
6.3
7.1
MICROCOPY RESOLUTION TEST CHART
NATIONAL BUREAU OF STANDARDS-1963-A

Report No. FAA-RD-79-125

LEVEL II

DEVELOPMENT OF AN AUTOMATED REMOTE COMMUNICATIONS AIR-GROUND (RCAG) MONITORING SYSTEM

Nicholas J. Talotta

Albert J. Rehmann

AD A083754

DTIC
APR 25 1980
C

APRIL 1980

FINAL REPORT

Document is available to the U.S. public through the National Technical Information Service, Springfield, Virginia 22161.

THIS DOCUMENT IS BEST QUALITY PRACTICABLE. THE COPY FURNISHED TO DDC CONTAINED A SIGNIFICANT NUMBER OF PAGES WHICH DO NOT REPRODUCE LEGIBLY.

Prepared for

U.S. DEPARTMENT OF TRANSPORTATION
FEDERAL AVIATION ADMINISTRATION
Systems Research & Development Service
Washington, D.C. 20590

DDC FILE COPY

80 4 25 004

NOTICE

The United States Government does not endorse products or manufacturers. Trade or manufacturer's names appear herein solely because they are considered essential to the object of this report.

DISCLAIMER NOTICE

THIS DOCUMENT IS BEST QUALITY PRACTICABLE. THE COPY FURNISHED TO DTIC CONTAINED A SIGNIFICANT NUMBER OF PAGES WHICH DO NOT REPRODUCE LEGIBLY.

Technical Report Documentation Page

1. Report No.	2. Government Accession No.	3. Recipient's Catalog No.
FAA-RD-79-125	AD-A083 754	

4. Title and Subtitle	5. Report Date
DEVELOPMENT OF AN AUTOMATED REMOTE COMMUNICATIONS AIR-GROUND (RCAG) MONITORING SYSTEM.	April 1980
	6. Performing Organization Code 101
7. Author(s) Nicholas J. Talotta, Albert J. Rehmann	8. Performing Organization Report No. FAA-NA-79-44
9. Performing Organization Name and Address Federal Aviation Administration National Aviation Facilities Experimental Center Atlantic City, New Jersey 08405	10. Work Unit No. (TRAIS)
	11. Contract or Grant No. 066-222
12. Sponsoring Agency Name and Address U.S. Department of Transportation Federal Aviation Administration Systems Research and Development Service Washington, D.C. 20590	13. Type of Report and Period Covered Final rept. March 1978 - May 1979
	14. Sponsoring Agency Code

15. Supplementary Notes

16. Abstract

A monitoring system for remote communications air-ground (RCAG) facility equipment was developed, including the design and fabrication of an engineering model. Sensor techniques for the transmitters and receivers were investigated. The design made use of a microprocessor with associated hardware and software to "continuously monitor" critical parameters. Certification data and/or alarms were reported via a terminal. It is concluded that production of automated monitoring equipment for Federal Aviation Administration (FAA) air/ground communication facilities with the specific sensor techniques, processing, and control used in this experimentation is feasible.

17. Key Words	18. Distribution Statement
Remote Monitor RCAG Monitor Remote Communication Air-Ground Radio Communications Communications	Document is available to U.S. public through the National Technical Information Service, Springfield, Virginia 22161

19. Security Classif. (of this report)	20. Security Classif. (of this page)	21. No. of Pages	22. Price
Unclassified	Unclassified	84	

Form DOT F 1700.7 (8-72) Reproduction of completed page authorized

240550

METRIC CONVERSION FACTORS

Approximate Conversions to Metric Measures

Symbol	When You Know	Multiply by	To Find	Symbol
		LENGTH		
in	inches	*2.5	centimeters	cm
ft	feet	30	centimeters	cm
yd	yards	0.9	meters	m
mi	miles	1.6	kilometers	km
		AREA		
in^2	square inches	6.5	*square centimeters*	cm^2
ft^2	square feet	0.09	square meters	m^2
yd^2	square yards	0.8	square meters	m^2
mi^2	square miles	2.6	square kilometers	km^2
	acres	0.4	hectares	ha
		MASS (weight)		
oz	ounces	28	grams	g
lb	pounds	0.45	kilograms	kg
	short tons (2000 lb)	0.9	tonnes	t
		VOLUME		
tsp	teaspoons	5	milliliters	ml
Tbsp	tablespoons	15	milliliters	ml
fl oz	fluid ounces	30	milliliters	ml
c	cups	0.24	liters	l
pt	pints	0.47	liters	l
qt	quarts	0.95	liters	l
gal	gallons	3.8	liters	l
ft^3	cubic feet	0.03	cubic meters	m^3
yd^3	cubic yards	0.76	cubic meters	m^3
		TEMPERATURE (exact)		
°F	Fahrenheit temperature	5/9 (after subtracting 32)	Celsius temperature	°C

*1 in = 2.54 (exactly). For other exact conversions and more detailed tables, see NBS Misc. Publ. 286, Units of Weights and Measures, Price $2.25, SD Catalog No. C13.10:286.

Approximate Conversions from Metric Measures

Symbol	When You Know	Multiply by	To Find	Symbol
		LENGTH		
mm	millimeters	0.04	inches	*in*
cm	centimeters	0.4	inches	in
m	meters	3.3	feet	ft
m	meters	1.1	yards	yd
km	kilometers	0.6	miles	mi
		AREA		
cm^2	square centimeters	0.16	square inches	in^2
m^2	*square meters*	1.2	square yards	yd^2
km^2	square kilometers	0.4	square miles	mi^2
ha	hectares (10,000 m^2)	2.5	acres	
		MASS (weight)		
g	grams	0.035	ounces	oz
kg	kilograms	2.2	pounds	lb
t	tonnes (1000 kg)	1.1	short tons	
		VOLUME		
ml	milliliters	0.03	fluid ounces	fl oz
l	*liters*	2.1	pints	pt
l	liters	1.06	quarts	qt
l	liters	0.26	gallons	gal
m^3	cubic meters	35	cubic feet	ft^3
m^3	cubic meters	1.3	cubic yards	yd^3
		TEMPERATURE (exact)		
°C	Celsius temperature	9/5 (then add 32)	Fahrenheit temperature	°F

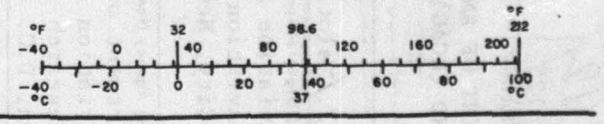

ACKNOWLEDGEMENT

The authors gratefully acknowledge the contributions provided by Mr. Daniel Penrith for the development and documentation of the software, Mr. Harry Brown for his development and documentation of the microprocessor/interface, and Mr. Adolph Cupp for his technical assistance in the accomplishment of the project.

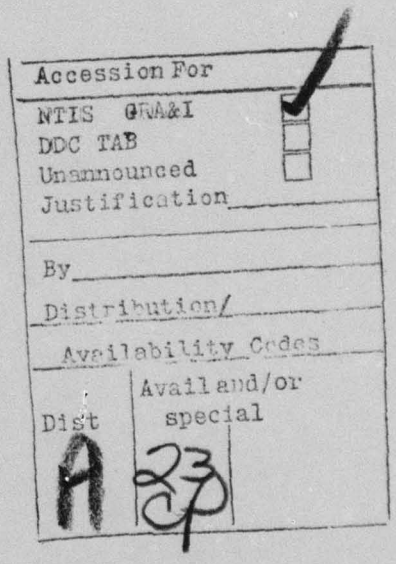

TABLE OF CONTENTS

	Page
INTRODUCTION	1
Purpose	1
Background	1
DISCUSSION	1
Design Objectives	1
General Monitor Description	2
Software Description	6
Method of Parameter Measurement	9
CONCLUSIONS	18
RECOMMENDATIONS	18
REFERENCES	20

APPENDIX A - Schematic Diagrams
B - Software Flow Charts
C - Monitor Printouts
D - Mathematical Equations Used for Parameters
E - Description of Sensors
F - Relationship of On-line Sensitivity Measurement to Off-line Sensitivity Measurement

PRECEDING PAGE BLANK - NOT FILMED

LIST OF ILLUSTRATIONS

Figure		Page
1	Communications Monitor Block Diagram	3
2	Experimental Communications Monitor Installed in RCAG RMM Test Bed	4
3	VSWR Test Configuration	12

INTRODUCTION

PURPOSE.

The purpose of this project was to define, develop, and demonstrate an automatic, real-time monitoring system for communications equipment using improved sensor techniques capable of future capabilities of alarm reporting, remote certification, and necessary remote control.

BACKGROUND.

As a result of the continuing growth in air traffic, and the significant advances in electronic technology, greater emphasis is being placed upon personnel efficiency and increased system reliability, maintainability, and availability.

Remote communications air-ground (RCAG) facilities are generally located in remote areas ranging in distances of up to 3-hours driving time from the technician's base (sector office). Therefore, a significant portion of the technician's day may consist of unproductive travel time. Currently, a technician regularly visits the site to perform routine maintenance, which includes such things as measurement of receiver sensitivity, transmitter power, antenna voltage standing wave ratio (VSWR), etc. In addition, complaints from air traffic controllers require unscheduled visits, often after normal working hours, to ascertain the condition of the equipment. Technicians on numerous overtime trips find degraded performance, a failure in a main or standby equipment (but not both), or no failure at all. If a method were available to measure the exact operating conditions of the equipment remotely, many trips could be delayed or avoided.

A solution to the problem could be to provide a remote monitor system which continuously and automatically monitors critical parameters of the communications equipment. The System Research and Development Service (SRDS), program 066-222, outlined three phases of effort: to examine techniques; to develop, procure, and demonstrate sensors; and to monitor RCAG facility parameters. The National Aviation Facilities Experimental Center (NAFEC) prepared recommendations for such an RCAG monitoring system in a Technical Letter Report (NA-78-4-LR) dated February 1978. In addition, NAFEC performed a cost benefit study which illustrated the economic advantages of an RCAG monitoring system. By a letter dated July 10, 1978, ARD-220 requested NAFEC to continue the communications monitor development phase in line with the proposed recommendations.

DISCUSSION

DESIGN OBJECTIVES.

The RCAG monitor system was designed such that most routine maintenance and certification functions could be performed by use of the remote monitor.

The use of proven state-of-the-art technology permits the design of a highly reliable system which requires minimal human intervention and the capability to provide automatic record keeping of all significant events.

A prime objective was to design a communications equipment monitoring system which will continuously monitor all critical parameters and determine if the transmit/receive equipment is operating within predefined limits.

The system design was intended to provide flexibility and expandability to meet future requirements. Provisions for adding modules to increase capacity for the transmitters and/or receivers form an integral part of the system design. The use of software and firmware techniques were also employed which provides flexibility for adding or changing system capabilities or future functional requirements. The use of modular hardware and software design also enhances such flexibility. With a microprocessor-based system and executive software, coupled with modular hardware boards and software routines, additional software or hardware modules required for different types of communication facilities, dependent upon the number of transmitters and/or receivers could be easily accommodated. Therefore, the monitor system is capable of being adapted by means of standard system elements to local requirements without modification to specific hardware elements. Thus, a design requirement for adaptation to the number and types of facilities and equipments to be monitored is satisfied.

The following features and capabilities were designed into the communications monitor equipment.

1. Failure detection and alarm for each of the monitored parameters.
2. Parameter certification data.
3. System performance trend data.
4. Fault isolation and diagnostics to the extent possible at "no cost."

The design provides complete isolation from the operational communications equipment and production units should be capable of attaining 20,000 hours mean time between failure (MTBF).

Also considered in the design was the capability to provide environmental parameter data (e.g., alternating current (a.c.) power, temperature, humidity, building security, etc.) at a future time.

Accuracies and tolerances of monitor measurements were established in line with operational requirements, but were guided by cost effectiveness.

GENERAL MONITOR DESCRIPTION.

Figure 1 is a block diagram of the Communications Monitor System. The design concept of the communications monitor was to "continuously monitor" all critical parameters and be capable of reporting errors to facilities and/or respond to "polls" by the central processing facility. Figure 2 shows the experimental equipment installed at the NAFEC RCAG Remote Maintenance Monitoring System (RMMS) test bed (building 176). Transmitter/receiver modifications

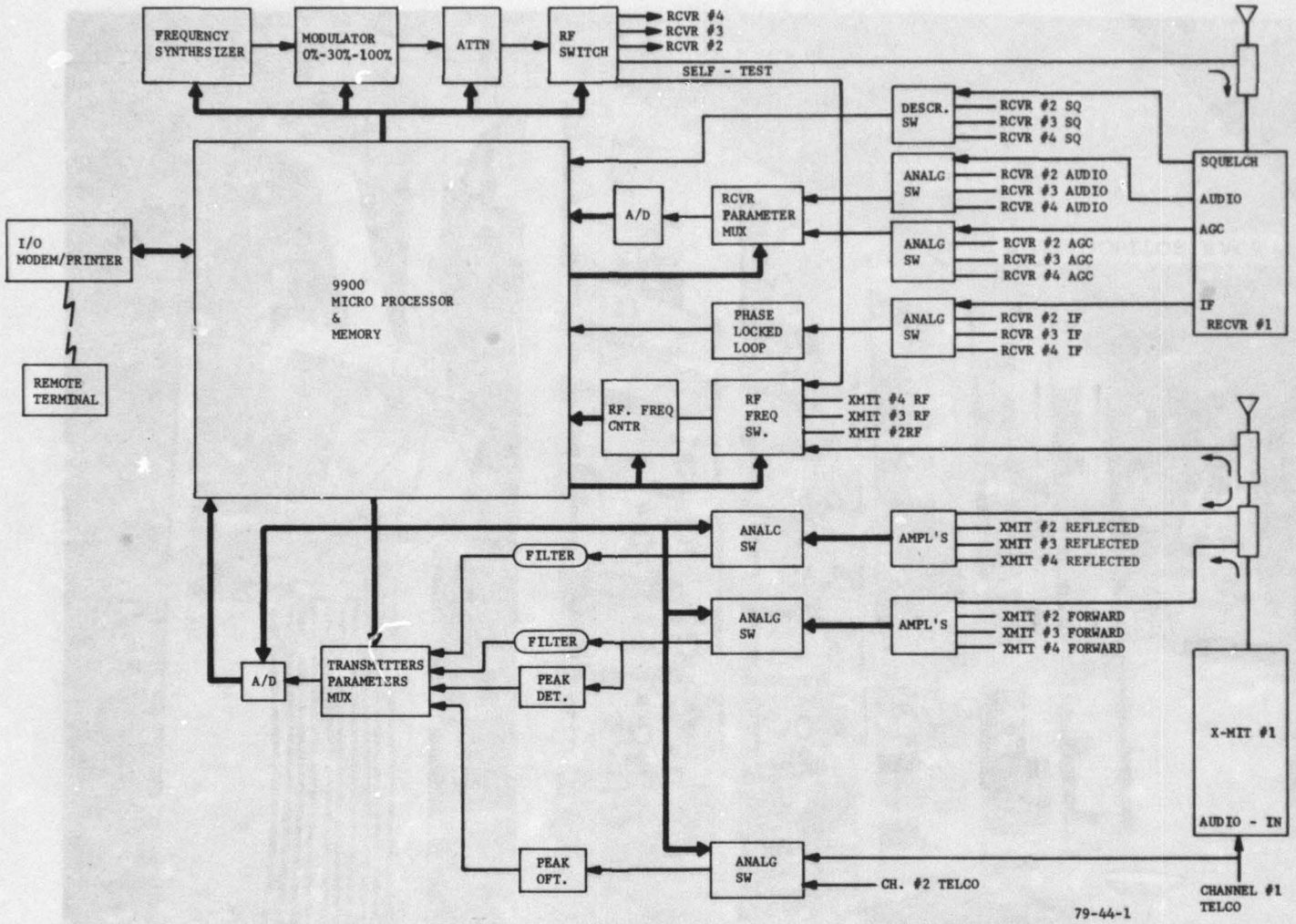

FIGURE 1. COMMUNICATIONS MONITOR BLOCK DIAGRAM

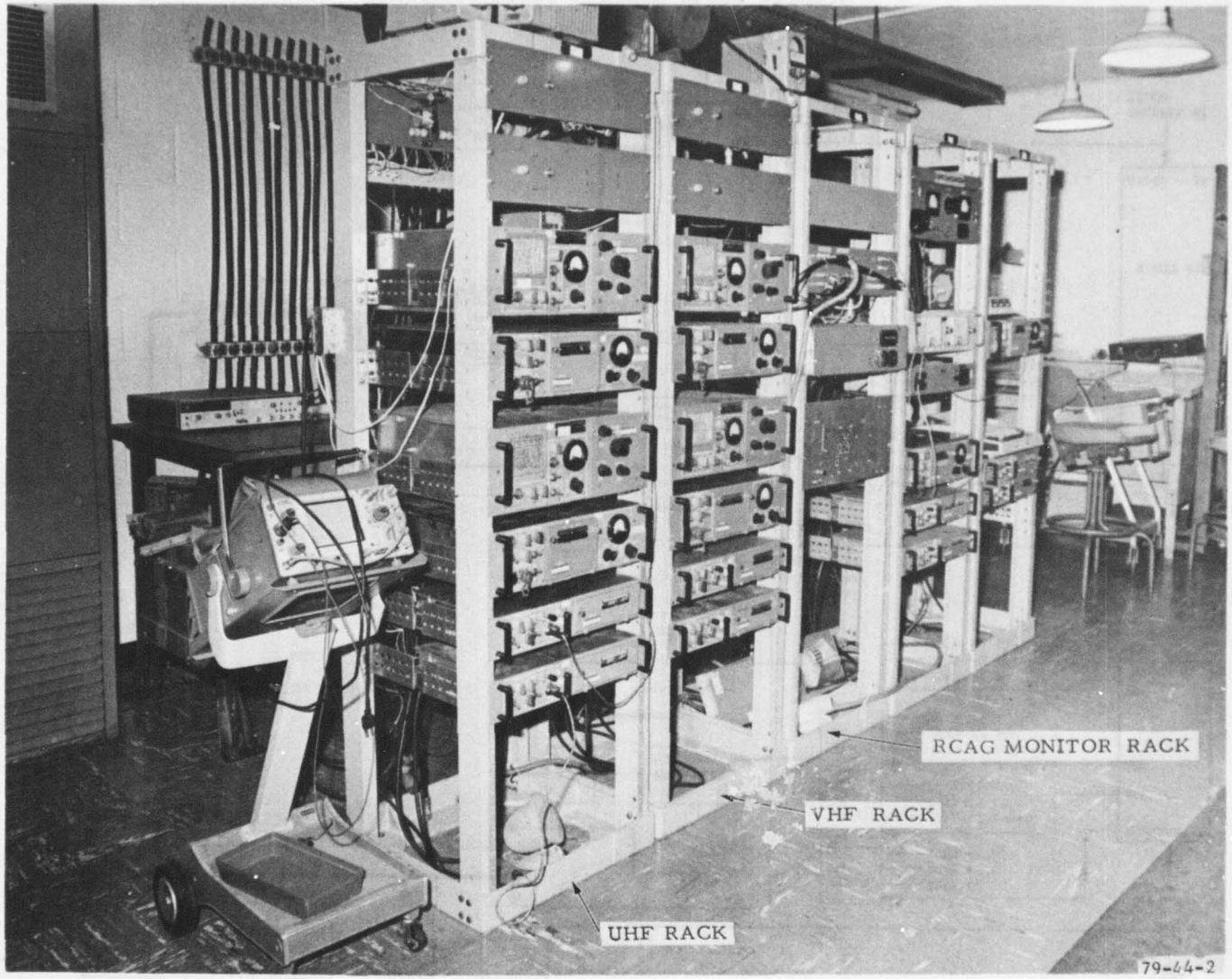

FIGURE 2. EXPERIMENTAL COMMUNICATIONS MONITOR INSTALLED IN RCAG RMM TEST BED

were minimized and common monitor circuitry was used wherever possible to enhance the reliability and economics. The NAFEC engineering model was designed to accommodate two-paired communications channels. A Texas Instruments 9900 microprocessor (16 bits) was used as the "heart" of the monitor system. The microprocessor determines the sequence of events for the data acquisition from each of the sensors, manipulates the data as required for averaging, filtering, etc., and formats it for transmission to/from the input/output (I/O) device.

The design approach placed emphasis upon monitoring parameters for both the on-line and standby equipment where possible. The following parameters are monitored:

1. Transmitter

   a. Forward power
   b. Reflected power
   c. Standing Wave Ratio (SWR)
   d. Operating frequency
   e. Percent modulation
   f. TELCO input level

2. Receiver

   a. Sensitivity
   b. Automatic Gain Control (AGC) voltage
   c. Squelch
   d. Audio level
   e. Bandwidth
   f. Center Frequency

This document does not address the environmental parameters, however, it recommends environmental data acquistion using commercially available techniques and hardware. The transmitter and receiver parameters are generally described in the following discussion and described in detail in other sections of this report.

Referring to the block diagram in figure 1, during each operational transmission the monitor will obtain data for forward and reflected power, transmitter frequency, percent modulation, the TELCO audio level. The radio frequency (RF) power data are obtained via a power sensor, either existing or a commercially available add-on, which is inserted directly into the antenna feedline. The RF carrier signal required for the measurement of frequency is obtained by means of a directional coupler located in the antenna transmission line. The system is capable of providing "initial" and "error" alarms. An "initial" alarm will be declared if predetermined tolerances are exceeded, which indicate the system has degraded to a level which requires some maintenance as determined by the site maintenance personnel. An "error" alarm will be declared by the microprocessor when the system reaches a predetermined out-of-tolerance condition.

Receiver measurements are performed by the monitor equipment for both the main (on-line) and standby (off-line) receivers. The measurement technique is essentially the same for all receivers, with the exception that off-line sensitivity measurements are performed using the audio output, whereas on-line measurements are made using the receiver intermediate frequency (IF) output.

Audio output level and AGC voltage are determined by the microprocessor after their respective outputs are multiplexed and digitized. The remaining receiver parameters are determined in conjunction with an RF frequency synthesizer which generates an RF signal modulated at (0, 30, or 100-percent) 1000 herts (Hz) which is injected into the receiver via a directional coupler in the antenna transmission line. During the off-line test, a 30-percent modulated carrier is injected into the receiver. Then, under microprocessor control, measurements are performed with and without the test signals (carrier modulation) injected until the 10-decibel (dB) signal plus noise-to-noise (S+N/N) ratio is obtained. Similarly, bandwidth is determined under microprocessor control via monitoring the receiver squelch break and stepping the frequency in 1-kilohertz (kHz) increments towards the receiver center frequency (from some lower limit points on the bandwidth curve skirts) to determine the 6 dB points. The center frequency of the receiver is then obtained by averaging the two 6 dB points determined in the bandwidth test.

During the on-line test, receiver sensitivity is monitored via the same method of signal generation, except it is 100 percent modulated. However, a phase-locked loop (PLL) is now used to "latch onto" the test signal at the IF output of the receiver. The "on-line sensitivity" (in dB) is considerably less signal level when the loop "locks" and thus does not break receiver squelch as in the off-line test. The PLL circuitry is also used for the determination of on-line bandwidth and frequency, employing a similar technique as previously discussed for the off-line tests.

SOFTWARE DESCRIPTION.

The software for the communications microprocessor-based data acquisition system is divided into several functions as follows:

1. Initialization--This function is used to initialize the timer and UARTS, clear the memory, and provide a means to input the date and time via the terminal.

2. Main Driver--This function calls the transmitter and receiver data collection routines and also checks for transmitter alarms.

3. Data Collection--This function is required to collect transmitter and receiver data at predetermined times, and to initiate the appropriate calculation routine.

4. Man-Machine Interface--This software function is to serve as a command processor which calls upon the various print routines, or to check if a message is pending.

5. Calculation--This set of routines performs the necessary calculation for the transmitter and receiver parameters. Appendix D to this report contains the derivation of equations used to convert or calculate appropriate parameters.

6. Miscellaneous Functions--These routines are required to handle the date and time-tag data, to store data in a timely fashion, process data, and to print data.

Software flow charts for the above functions are included in appendix B.

INITIALIZATION FUNCTION. This function initializes the TMS 9902 asynchronous communications controller which is used to interface an RS-232 port to the TMS 9900 microprocessor. The random access memory (RAM) is zeroed and the TMS 9901 is initialized. This starts the timer located in the TMS 9901 to interrupt at 250-millisecond intervals and to initialize the timer, local terminal receiver interrupt, and press-to-talk (PTT) interrupt to complete initialization. Interrupts, as opposed to other software methods, were chosen for the timer and receiver of the local terminal to enhance the through-put of the system. A routine to manually enter the date and time is called and control is then passed to the main driver function. The initialization function is located in an initialization file. Also included in this file are interrupt handlers for the timer, local receiver terminal, PTT, routines to output characters to/from the local terminal, and to output special characters (e.g., a prompt, "?" or CRLF).

MAIN DRIVER FUNCTION. This function calls the tranmitter and receiver data collection routine. Before and after each call, a test is made to determine if there is a message from the local terminal. In addition, transmitter alarms are checked after transmitter data are acquired from the sensors.

DATA COLLECTION FUNCTION. This function is divided into two parts. The transmitter data collection function and the receiver data collection function. The receiver data collection function can be further divided into on-line or off-line tests. Two conditions must be met before transmitter data is taken. A PTT signal is present and data for the corresponding transmitter has not been taken within a specified interval of time (i.e., 1 second).

A receiver test is performed on each receiver at predetermined time intervals (presently 1 minute). PTT's are connected to an interrupt which is enabled during a receiver test. One of the conditions for taking receiver data is that no PTT's are present, since erroneous data would result if PTT's were simultaneously present. One priority word is used to specify which receiver is to be tested and another priority word to specify which receivers are on-line and off-line.

The receiver on-line test involves a frequency synthesizer, PLL circuit, multiplexers, and an analog-to-digital converter used to collect AGC voltage and audio voltage. The detailed operation of the frequency synthesizer, PLL,

etc., is discussed in appendix E of this report. To determine the receiver sensitivity on-line, the frequency synthesizer is set to the correct frequency and a signal is injected into the front end of the receiver. If squelch is broken at any time during the test, an alarm bit is set and the test is aborted. This insures there will not be operational interference as a result of the monitor, and also there will not be erroneous monitor data.

If the PLL is not locked, the signal is increased approximately 0.3 dB and the test is performed again. The signal is raised until an upper limit is reached or the PLL is locked. If the upper limit is reached and the PLL is not locked, an alarm bit is set and the test is aborted. If the test is successful, AGC and audio voltage data are taken and then the bandwidth and center frequency test is performed.

The attenuation level that was reported for the receiver sensitivity test (when PLL locked) is used for the bandwidth test. This level is increased 6 dB and the frequency is then set for the corresponding low- and high-skirts to check bandwidth. If the PLL is not locked in either the low-skirt or high-skirt test, a "no go" condition is reported and the alarm bit is set.

The off-line receiver test is implemented differently from the on-line. This test is similar to the sensitivity measurement as specified by the maintenance procedures. The first step is to set up the test signal to be injected at the desired frequency with 0 percent modulation. The squelch bit is then tested. If squelch is not broken, the signal is increased until squelch is broken and the value of the attenuator is saved for the bandwidth test (if squelch is not broken, and the signal has been increased above an upper limit, the test is aborted and an alarm is produced). The next step is to determine the value of an unmodulated carrier that will quiet the receiver. The test signal is then modulated 30 percent and the signal is increased until the audio voltage reaches approximately three times the "quieted" voltage. As before, if the signal is raised past the upper limit, an alarm is produced and the test is aborted. If the receiver passes the sensitivity test, the attenuation value is stored, AGC voltage data are taken, and the bandwidth test is performed.

The bandwidth test requires the attenuator to be set for 6 dB greater signal than the value at which the receiver broke squelch during the sensitivity test. Modulation is set to zero and the frequency synthesizer is set to the low-skirt frequency. RF is turned on and the receiver is tested for squelch. If squelch is not broken, the frequency is raised 1 kHz, and the test continues. The same for the upper skirt, except the frequency is brought down to the center frequency. If, for any reason squelch does not break, the test is aborted and the receiver fails the bandwidth test and an alarm is produced. If the receiver successfully passes the bandwidth test, the lower and upper skirt frequencies are stored. Both the on-line and off-line software tests return to the receiver main driver routine, and the receiver calculation is called. All receivers are tested as time allows.

MAN-MACHINE INTERFACE FUNCTION. Character input from the local terminal is interrupt driven. A flag is set in a status word if a message is waiting to be processed. The options available from the system include printing of a "menu," or requesting either transmitter and/or receiver data. In addition, data can be chosen discretely or as a group. An error message is printed if none of the above options is chosen. The "ESC" key, when pressed, aborts the current request, blanks the message buffer, and resets the appropriate flags. Actual printouts are included in appendix C.

CALCULATION ROUTINES. Each test stores the present time. There is a separate calculation routine for the transmitter and receiver test. Forward power, reflected power, TELCO lines, percent modulation, SWR, and frequency are the transmitter parameters reported. The description and development of equations are found in appendix D. Forward power, reflected power, percent modulation, and SWR are limit checked in the calculation routine. As data are calculated, it is converted to ASCII characters and stored in a temporary buffer when completed. A store routine is called and data are stored in the appropriate memory locations.

The description and development of equations used to convert receiver sensitivity, and, in the case of the off-line test, the level at which squelch broke, will also be found in appendix D. The on-line test reports AGC voltage, audio voltage, receiver sensitivity, and a go/no go condition for the bandwidth test. The off-line test differs from the on-line test in the following way: the level of the attenuator when squelch broke is reported as a dB level under the squelch heading together with the lower and upper skirt frequencies.

As previously mentioned, each parameter is stored in ASCII characters in a temporary buffer. When the routine is completed, the data are stored in the appropriate memory location.

MISCELLANEOUS FUNCTIONS. This includes routines to store data, print header information, and print data. Data are stored in ASCII characters.

METHOD OF PARAMETER MEASUREMENT.

TRANSMITTER PARAMETERS. The following transmitter parameters are measured:

1. Foward power
2. Reverse power
3. Peak percent modulation
4. SWR
5. Peak TELCO level
6. Frequency

All transmitter parameter data are collected when a given transmitter is keyed. The monitor senses PTT via a contact closure on the keying relay of each transmitter. Caution was exercised in the method of sensing PTT, since excessive noise spikes picked up from other relay coils, power line noise, etc., could cause a false PTT indication. Debouncing circuitry was used to

eliminate keying relay bounce, and optically coupled isolators were used to reduce noise pickup on signal wires feeding the monitor processor interface. Additional filtering was provided on the interface board. A brief summary of parameter measurement techniques is given below.

When the transmitter is keyed, direct current (d.c.) voltages occur at the directional power detector (DPD) outputs marked FWD and REV. These voltages are proportional to forward and reflected antenna feedline power and will contain an audio component when the transmitter is modulated.

The DPD is used to measure three parameters of each transmitter:

1. Foward Power--via a d.c. voltage proportional to forward RF power.
2. Reflected Power--via a d.c. voltage proportional to reflected RF power.
3. Percentage Modulation--via an audio component superimposed on the DPD d.c. outputs.

Antenna SWR is not measured directly but is calculated by the monitor processor using the relation in equation (1).

$$SWR = \frac{1 + \sqrt{\frac{P_{REV}}{P_{FWD}}}}{1 - \sqrt{\frac{P_{REV}}{P_{FWD}}}} \qquad (1)$$

P_{REV} = reflected antenna power
P_{FWD} = forward antenna power

Several tests were performed and problem areas were investigated relative to the DPD and VSWR calculation. Briefly, it was found that the indicated VSWR changed as a function of phase angle (electrical position) of the reflected standing wave. Refer to appendix E for a detailed discussion.

Antenna feedline loss in systems with long cable runs causes misleading SWR indications due to attenuation of the reflected wave. If the approximate feedline loss is known, true antenna conditions may be established (reference 1). The results presented in reference 1 are not implemented in the software developed for this system.

Telephone line audio level is measured at the interface of the TELCO line output and transmitter input. The TELCO line is transformer coupled and thus is a balanced line to ground. The monitor hardware senses audio voltage between one side of the transformer and ground.

Transmitter frequency is directly measured by means of a counter. The RF signal for the counter is obtained via a directional coupler (-40 dB coupling) mounted in the antenna feedline physically next to the DPD.

Following is a detailed description of parameter measurement.

Forward Power. The forward output of each DPD is buffered and prescaled with an adjustable gain amplifier which has an input impedance of 5,000 ohms (resistive). At this impedance, the sensor exhibits the transfer characteristic shown in figure E-1. An amplifier gain of approximately five is used to expand the output voltage range of the DPD, enabling a more precise conversion to digital form. A fine gain adjustment is available on each amplifier to null out amplifier and DPD imbalances. The amplifiers used are integrated circuit operational amplifiers, with extremely low input off-set voltage (does not require an off-set null adjustment), and low thermal drift.

Prescaled DPD outputs from each of the transmitters are analog multiplexed to one line. This multiplexer is referred to as the forward channel mux. The output of the multiplexer is buffered using a unity gain non-inverting amplifier as a high-impedance to low-impedance transformer. At this point, the DPD output is filtered to remove any audio components which would cause erroneous conversion. Filtering is done by an active low-pass filter with 20 dB/decade rolloff and a break frequency of 10 Hz. The filter output is routed to another analog multiplexer (referred to as the parameter mux). The output of the parameter mux is routed through a buffer amplifier to the analog-to-digital (A-D) converter. The procedure for forward power measurement is as follows: When any VHF-UHF transmitter is keyed, an interrupt is generated, causing the monitor processor to scan all PTT inputs. The processor will then determine which keyed transmitter will be evaluated and sends the address of that transmitter to the channel multiplexer enabling the correct DPD; and providing the proper code to the parameter multiplexer to allow A-D conversion of the forward DPD output. The monitor processor takes the digital equivalent of DPD output and calculates the forward power level using the equation of the characteristic curve shown in figure E-1. (This is a calculation, not a table lookup.)

Reverse Power. Analog processing necessary for reverse power measurement is the same as that necessary for forward power with one exception; due to the lower output voltage of the reverse power output of the DPD, a higher gain setting of the adjustable gain amplifier is necessary. However, all subsequent buffering and filtering is identical. The analog multiplexer for reverse power is referred to as the reverse channel mux. The procedure for reverse power measurement is the same as that for forward power except that the code sent to the parameter mux allows A-D conversion of the reverse DPD output. Also, the reverse power is then calculated from the equation of the characteristic curve in figure E-2.

Peak Percent Modulation. Peak percent modulation measurement has been found to be a better indication than an average modulation measurement. Standard operating procedure for site personnel is to set up transmitter modulation clipping levels with a sinewave audio generator. Under the steady-state conditions of a sinewave input, the transmitter will not overmodulate, even when overdriven. However, the time constant of the limiting circuitry in the transmitter is such that the transient peaks of the voice can cause

over modulation of the transmitter. Thus, a transmitter that has been properly set up may actually be overmodulating. The effect is invisible when measuring average modulation, but is apparant when the modulation peak is measured.

The output of the adjustable gain amplifier corresponding to the forward power DPD output is routed to an analog switch. The switch selects the output from the active transmitter. The output of the switch is routed to a peak detector. This switch thus minimizes the peak detector circuitry required to one package per main-standby transmitter pair. The output of the peak detector is then buffered and routed to the parameter mux.

The procedure for peak percent modulation measurement is as follows: When the monitor processor detects PTT, it clears all peak detectors corresponding to the transmitters that were keyed. This removes any residual voltage from previous transmissions. The monitor processor delays one second (during this second, forward and reverse power are sampled and calculated), then sends the correct code to the parameter mux allowing the peak detector output to be A-D converted. Immediately after conversion, the peak detectors are cleared. Due to the "linear" characteristic (appendix E) of the DPD, the peak percentage modulation is calculated by equation 2.

$$\text{Percent Mod} = 100 \left(\frac{V_{PK}}{V_{FWD}} - 1 \right) \qquad (2)$$

V_{PK} det = peak detector output voltage
V_{FWD} = DPD output voltage before conversion to forward power

Standing Wave Ratio. This parameter is calculated by the monitor processor. After the conversion of the DPD forward and reverse outputs from voltages to watts, the processor calculates the SWR at the transmitter output.

During performance tests of the VSWR parameter, it was determined that the indicated VSWR changed as the transmission line length was increased or decreased. The test configuration is shown in figure 3.

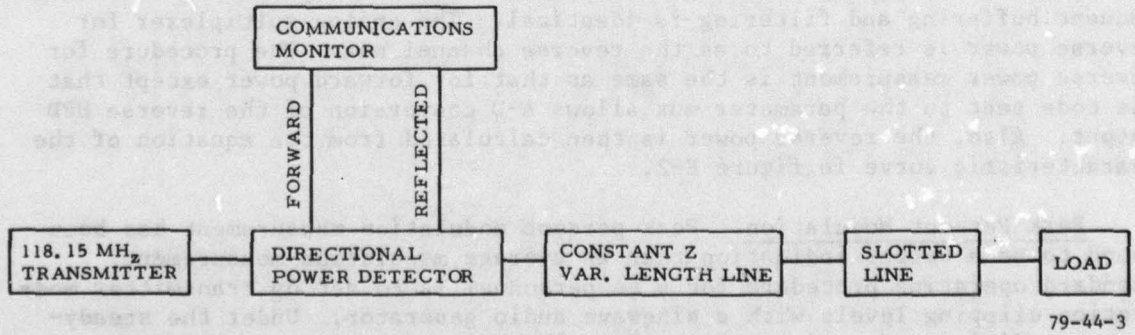

FIGURE 3. VSWR TEST CONFIGURATION

With a fixed load having a VSWR of 1.975 (as measured using the slotted line), the variable length line was changed, producing a minimum VSWR of 1.7:1 and a maximum VSWR of 2.1:1 (as determined by the communications monitor). Further investigation revealed that the errors which occurred were due to the DPD whose reflected voltage outputs were found to be 0.1422 V d.c. and 0.2318 V d.c., respectively. This variation is attributed to the design of the directional power detector. A further description of the DPD is included in appendix E.

Peak TELCO Level. The TELCO line level mesurement has a two-fold purpose; to provide an indication of telephone line condition, and as fault diagnosis of the transmitters.

If transmitter modulation levels are excessively low or high, a quick inspection of the TELCO voltage level will tell whether the transmitter or other equipment failed. The comparison is more obvious at low levels of modulation than higher levels, since the transmitters have bult-in clipping circuitry to prevent excessive modulation peaks. As an example, a transmitter that is modulating at 20 percent with a TELCO input of 0.05 volts shows a fault on equipment other than the transmitter; a modulation level of 20 percent with a TELCO level of 1 volt indicates a transmitter fault.

Audio present at the transmitter remote output plug is buffered and prescaled using a fixed gain amplifier. The amplifier gain is set such that signal levels in the audio input range of the transmitter will not saturate or cutoff the buffer amplifier. The output of the buffer amplifier is routed to a peak detector. One peak detector is dedicated to each telephone line input. The output of the peak detector is routed to the parameter mux.

The procedure for TELCO level measurement is the same as peak percent modulation measurement, i.e., after the occurrence of PTT the modulation peak detectors are cleared, followed immediately by the clearing of the TELCO peak detector (peak detectors dedicated to phone lines whose corresponding transmitters have not been keyed, are not cleared). After approximately a 1-second delay, the monitor processor puts out the proper code to the parameter mux, enabling A-D conversion of the TELCO peak detector output voltage. The monitor processor then converts the digital word obtained from the A-D converter back to volts using equation 3.

$$\text{Volts} = (\text{A-D conv. output}) \times (0.0024) \qquad (3)$$

Frequency Measurement. The monitor processor waits 0.5 seconds after detecting a valid PTT signal to allow the transmitting equipment to stabilize. After 0.5 seconds, the processor outputs the address of the active transmitter to the frequency counter.

This enables the RF multiplexer in the frequency counter to select the active transmitter. Next, the monitor processor checks the EOC line on the counter, and if the line is false (counter not busy), the processor pulses the reset line. The reset line initializes the counter and starts the count sequence. The count sequence takes approximately 0.15 seconds (0.2 sec. max);

and the counter indicates busy by a logic one (true) on the EOC line. The monitor processor continually loops and tests EOC waiting for the end of the count sequence. When EOC becomes false (counter finished), the frequency data are strobed into the processor. The processor performs the hexidecimal-to-decimal conversion of the data, enabling it to be printed out as a decimal number.

As a safeguard against system lockup, a timer internal to the monitor procesor generates an interrupt after 0.25 seconds. This interrupt prevents the processor from looping endlessly waiting for EOC to become false in the event of a frequency counter failure. If EOC is still true at the time of the interrupt, the counter is considered faulty. The monitor processor will print all zeros instead of the transmitter frequency as the fault indication.

Transmitter Parameter Measurement--Summary. When a controller keys a VHF-UHF transmitter pair, an interrupt is generated which causes the monitor processor to scan the PTT inputs (in a two-channel system, there are eight possible PTT inputs, one from each transmitter). After detecting the valid PTT pair, the monitor will clear the associated modulation and TELCO peak detectors. One-half second after detection of PTT, the processor outputs the transmitter address to the forward and reverse channel multiplexers, and to the frequency counter. Then the frequency counter is reset. After a 0.2-second delay, the frequency data are transferred to the processor where it is converted to decimal form. The processor sends the correct code to the parameter mux, and forward power data are taken and converted to watts. The processor then sends the correct code to the parameter mux to enable reverse power data to be taken and converted to watts. Following the reverse power calculation, the SWR is calculated.

One second after the peak detectors were cleared, the monitor processor sends the correct codes to the parameter mux to enable first the peak percent modulation and then peak TELCO level measurements. At this time, the percentage modulation is calculated.

When a VHF-UHF transmitter pair is keyed, the monitor always performs the measurement sequence, described above, on first the VHF transmitter and then the UHF transmitter. The total time required for one complete transmitter test is approximately 1.1 seconds.

If a transmitter is unkeyed during a measurement sequence, the data for that sequence are not considered valid. Valid transmitter data are stored in the processor until that transmitter is keyed again. The new data takes the place of the old data. Thus, if a data report is requested at the monitor keyboard/cathode ray tube (CRT), only the most recent data will be reported. The process of reporting the data to the keyboard/CRT does not destroy the data stored in the monitor processor.

RECEIVER PARAMETERS. The following receiver parameters are measured:

On-line sensitivity
Off-line sensitivity
AGC
On-line bandwidth
Off-line bandwidth
Audio
Squelch

All receiver data are taken once per minute. If the corresponding transmitter is keyed at the time of the receiver test, or if it is keyed during the receiver test, the receiver test is aborted and the parameter data disregarded and the receiver test is performed immediately after the transmitter is unkeyed.

A brief summary of parameter measurement techniques is given below. An RF signal generator inherent to the monitor is used to perform all receiver parameter measurements. The RF generator output is injected into the receiver antenna terminals via a directional coupler installed in the receiver antenna feedline.

Signals present at the IF test jack are used to perform the on-line sensitivity test. Test receivers at NAFEC were modified to bring the IF test point out to a terminal strip mounted on the rear of the receiver. Also, the squelch test point was brought out to this terminal strip. The time required for one man to make this modification was approximately 1.5 hours.

Audio and AGC are measured at the receiver remote output plug.

On-line Sensitivity. The audio at the IF test point is buffered on the monitor interface board, then routed to an analog multiplexer (also referred to as channel mux). The output of the multiplexer is buffered and compressed, then routed to an audio phase-locked-loop (PLL), whose function is to give an indication when an audio signal in the loop passband (950 Hz to 1,050 Hz) is present.

The PLL circuit included an active bandpass filter with a center frequency of 1,000 Hz, and a Q of 10 which was designed to improve the signal-to-noise ratio of the loop.

The loop will lock on a signal that is 6 dB below the noise level (see appendix E). The loop time constants were intentionally made long to prevent random noise from causing the loop to sporadically lock. The long time constants also causes the loop to require more time to lock onto a coherent signal, but the difference is small and the effect is of no consequence. A low-level RF test signal, modulated at 100 percent, tuned to the specified receiver center frequency is injected into the receiver under test. The test signal is detected in the receiver, and the audio appears at the IF output test point.

The injected signal amplitude is increased until the audio level is high enough for the loop to lock onto it, providing an indication to the monitor processor that the audio has been detected.

Detection of the audio usually occurs at about -120 decibels referenced to one milli-watt (dBm) using the test receivers at NAFEC. Since this level is approximately 18 dB below the squelch threshold, the on-line receiver testing goes virtually unnoticed and will not interfere with normal receiver operation. Test signal levels injected into an on-line receiver at the center frequency are no greater than -115 dBm. This corresponds to a signal plus noise-to-noise ratio of approximately -95 dBm (see appendix F). A receiver which cannot pass this test is considered faulty.

The procedure for performing the on-line sensitivity test is as follows:

The monitor processor sends a control word to the RF generator which turns the generator RF off, tunes the generator to the receiver center frequency, selects 100-percent modulation and -125 dBm signal level.

The monitor processor sends the address of the receiver, under test, to the RF generator, enabling the correct RF output port, and to the IF channel mux enabling the IF test point audio to be routed to the PLL.

The generator RF is turned on. After a delay of 10 milliseconds, the monitor processor checks for a lock indication from the PLL. If the loop is not locked, the processor will send a control word to the generator to increase the RF level by 0.3 dB. This process continues until the loop locks, or -115 dBm signal level is reached.

While the processor is performing the on-line test, it is continuously monitoring the squelch output of the receiver. If squelch breaks, the test is immediately aborted; the RF generator is switched to 80 megahertz (MHz) (an out-of-band-frequency), and the RF output is turned off.

Off-Line Sensitivity. Receiver sensitivity is defined as the injected RF signal level which produces a 10 dB signal plus noise-to-noise ratio at the receiver audio output terminals when a 1,000 Hz modulated signal is injected at the receiver input and 30 percent modulation of the injected signal is switched on and off.

Receiver audio output is measured at the receiver TELCO line interface. The audio voltage is buffered on the receiver board and analog multiplexed (referred to as the audio channel mux). The output of the multiplexer is buffered, then routed to a circuit which outputs a d.c. voltage equal to the mean square audio voltage.

The off-line sensitivity test measures receiver sensitivity and audio power output simultaneously. The minimum required power output of the receiver with a 30 percent modulate RF signal input is 100 milliwatts. Since the senstivity test requires a 10 dB ratio in audio output when modulation is

switched off, the receiver audio output should drop to 10 milliwatts or less when RF modulation is switched off. Thus, only two audio voltages must be checked in order to perform two receiver tests; quieting level (audio voltage corresponding to 10 milliwatts) and rated power output (audio voltage corresponding to 100 milliwatts).

The monitor processer outputs a control word to the RF generator which tunes the generator to the receiver center frequency, selects modulation off, and sets the generator output level to -110 dBm. The processor then outputs the receiver address to the audio channel mux and to the RF generator enabling the correct RF output port.

The processor sends a command to the RF generator to turn the RF on and waits 20 milliseconds for the system to stabilize before the audio voltage is sampled; the requirement is that the audio voltage be less than or equal to the quieting level. If the receiver is not quieted (voltage too high), the RF generator output level is increased by 0.3 dB, and the audio voltage is measured again. This process repeats until the receiver audio output decreases to the quieting level. Then 30 percent modulation is selected and the receiver audio is sampled; the requirement is that the rated power output level is reached. When this level is reached, the RF generator output level is the measured receiver sensitivity. If the level is not reached, the RF generator output is increased by 0.3 dB, and the audio voltage is measured again. This process repeats until the receiver audio output reaches the rated power output level.

The maximum RF level injected into the receiver is -95 dBm. If the test is not passed at this signal level, the receiver is considered faulty.

Automatic Gain Control. Receiver AGC is buffered on the monitor board with a unity gain amplifier. The output of the amplifier is routed to an analog multiplexer, referred to as the AGC channel mux.

Receiver AGC is measured at the receiver sensitivity level. On-line AGC is measured at the RF injection level at which the PLL locks.

Off-line AGC is measured at the RF injection level which corresponds to the 10 dB (S + N) / N.

On-Line Bandwidth. This test is performed in a very similar manner to the on-line sensitivity test. The test procedure is as follows:

The monitor processor sends a control word to the RF generator which tunes the generator to the upper skirt frequency of the receiver (6 dB point), selects 100-percent modulation, and sets the attenuator such that the generator output level is 6 dB higher than the value measured in the on-line sensitivity test.

The processor then turns on the RF and waits 10 milliseconds for the PLL to provide a lock indication. The process is then repeated for the lower skirt frequency. If the loop fails to lock at either skirt, the receiver is considered faulty.

Off-Line Bandwidth. Instead of providing a go-no-go indication as is done in the on-line test, this test measures the frequency at the 6 dB point on each skirt.

The test procedure is as follows: While performing the off-line sensitivity test, the injected RF level at which squelch breaks is tagged. The monitor processor sends a control word to the RF generator which tunes the generator 30 kHz below the receiver center frequency, sets the attenuator such that the RF output is 6 dB above the level that caused squelch to break during the off-line sensitivity test, and selects modulation off. The processor then outputs commands to step the generator frequency in 1 kHz increments toward the receiver center frequency. The time between commands is 100 millseconds. The processor continuously monitors the receiver squelch line, and when a squelch break is detected, the generator output frequency is considered the lower skirt frequency. The process is repeated to determine the upper skirt frequency.

Squelch. Squelch can take only two values and is, therefore, in digital form. Level shifting to TTL logic levels, and digital multiplexing is accomplished on the monitor interface board.

CONCLUSIONS

Production of automated monitoring equipment for FAA air/ground communications facilities with the specific sensor techniques, processing and control used in this experimentation is feasible. It is further concluded that the technology exists, within reasonable economic constraints, to monitor both on-line and off-line receiver parameters. However, monitoring of off-line transmitters would degrade the performance of on-line receivers for sites where transmitters and receivers are colocated. A significant communications monitoring obstacle is the determination of transmission line VSWR using directional power sensors because of the sensitivity to complex loads (phase angles) present at the coupler such that satisfactory VSWR calculation could not be performed under all conditions.

RECOMMENDATIONS

It is recommended that any future use of the NAFEC developed communications monitor and/or the implementation of a communications equipment monitor should be directed to include the following:

1. Develop an improved directional power detector to provide for more accurate voltage standing wave ratio (VSWR) information.

2. Investigate the feasibility of locating the sensor and signal conditioning electronics in the transmitter.

3. Develop the teleprocessing software which will allow the remote monitor to communicate with the Remote Maintenance Monitor System (RMMS) central site. This should include the capability to send both prealarm and alarm data.

4. Implement the software required to check limits and allow authorized personnel the ability to remotely change prealarm limits.

5. Provide diagnostic software to enable the site technicians to use the microprocessor as a tool to isolate technical problems.

6. Improve the technical design/approach for various circuits (e.g., the phase-locked loop (PLL) circuitry should make use of a single 1,000 Hz signal for both the modulation and receiver lock signals).

7. Develop an upgraded software package which is capable of such things as: (a) program self-check and/or internal monitoring functions, (b) differentiate an automatic gain control (AGC) squelch break as to either a press-to-talk (PTT) or error.

8. Investigate monitoring the transmitter-receiver transmission lines at remote communications air-ground (RCAG) sites via "looking" at the radiated radio frequency (RF) present on the receiver transmission line (at the synthesizer injection port) when PTT is present.

9. Investigate environmental sensors and associated microprocessor interface techniques for use at remote sites.

10 REFERENCES

1. Talotta, N.J. and Rehmann, A.J., "Recommendations for an RCAG Monitoring System."

2. Signetics Application Manual

APPENDIX A

SCHEMATIC DIAGRAMS

Page			
A-2	XD2913	8/11/78	Communication Test Bed for Remote Monitor System
A-3	XD2914	8/14/78	Communication Monitor RCVR/XMIT Mod
A-4	XD2950	12/15/78	RTR/RCAG Monitor RCVR Monitor Up Interface
A-5	XD2951	12/18/78	RCAG/RTR Monitor Synthesizer Attenuator Card
A-6	XD2952	2/18/79	IF, AGC, Squelch & Audio Mux
A-7	XD2953	12/19/78	RCAG/RTR Monitor Synthesizer (Modulator)
A-8	XD2969	2/20/79	Common Monitor Block Diagram
A-9	XD2970	2/22/79 Sheet 1	RCAG/RTR Monitor Transmitter Scaling & Multiplexer
A-10		Sheet 2	Peak Detector
A-11		Sheet 3	Microprocessor Interface
A-12	XD2971	2/26/79	RTR/RCAG Monitor Synthesizer Block Diagram
A-13	XD2972	2/27/79	Synthesizer Digital Control
A-14	XD2973	2/27/79	Modification to 9900 Board
A-15	XD2975	3/8/79	Frequency Counter
A-16	XD2993	5/24/79	Power Supply

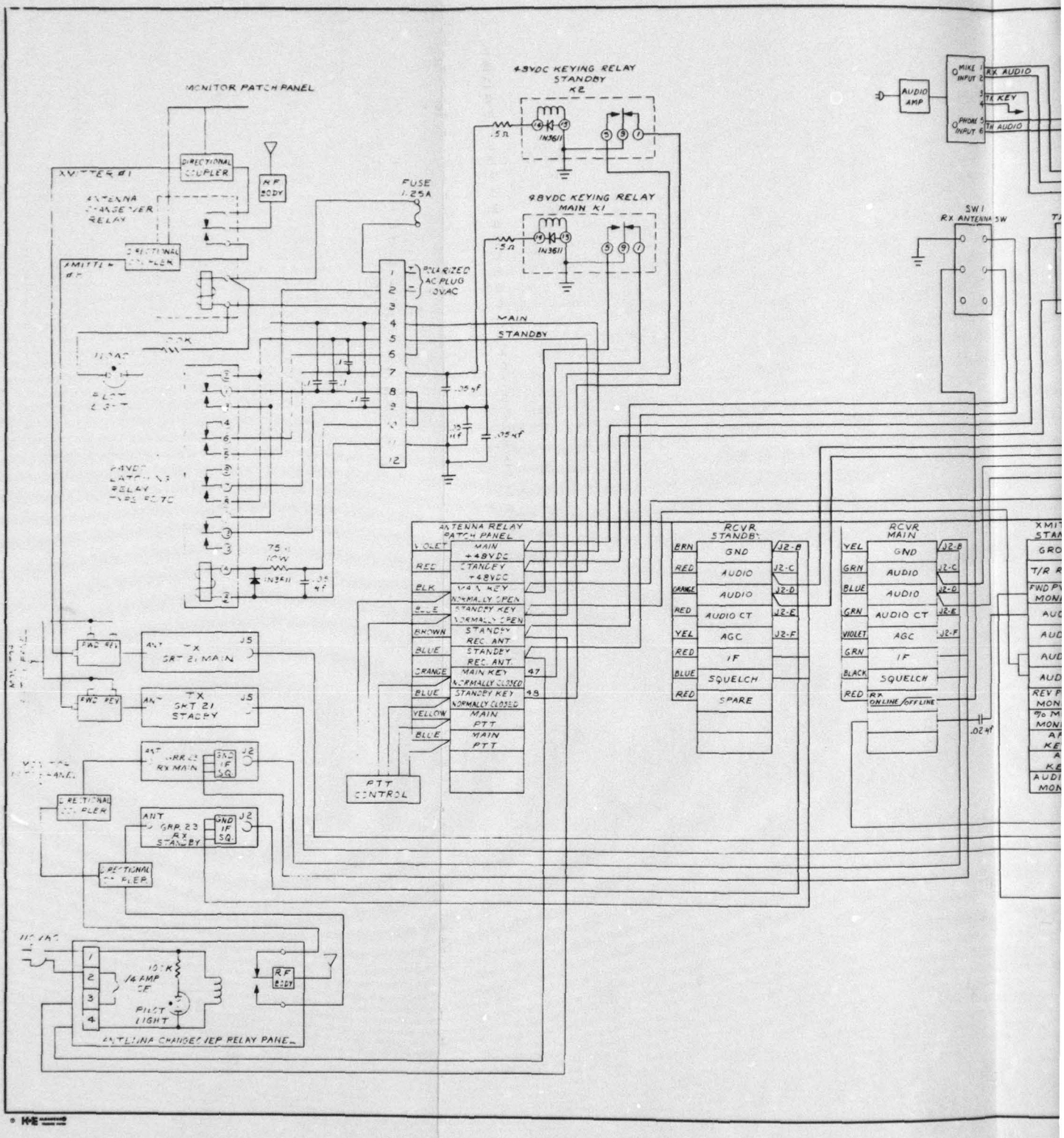

FIGURE A-1. COMMUNICATION TEST BED FOR REMOT

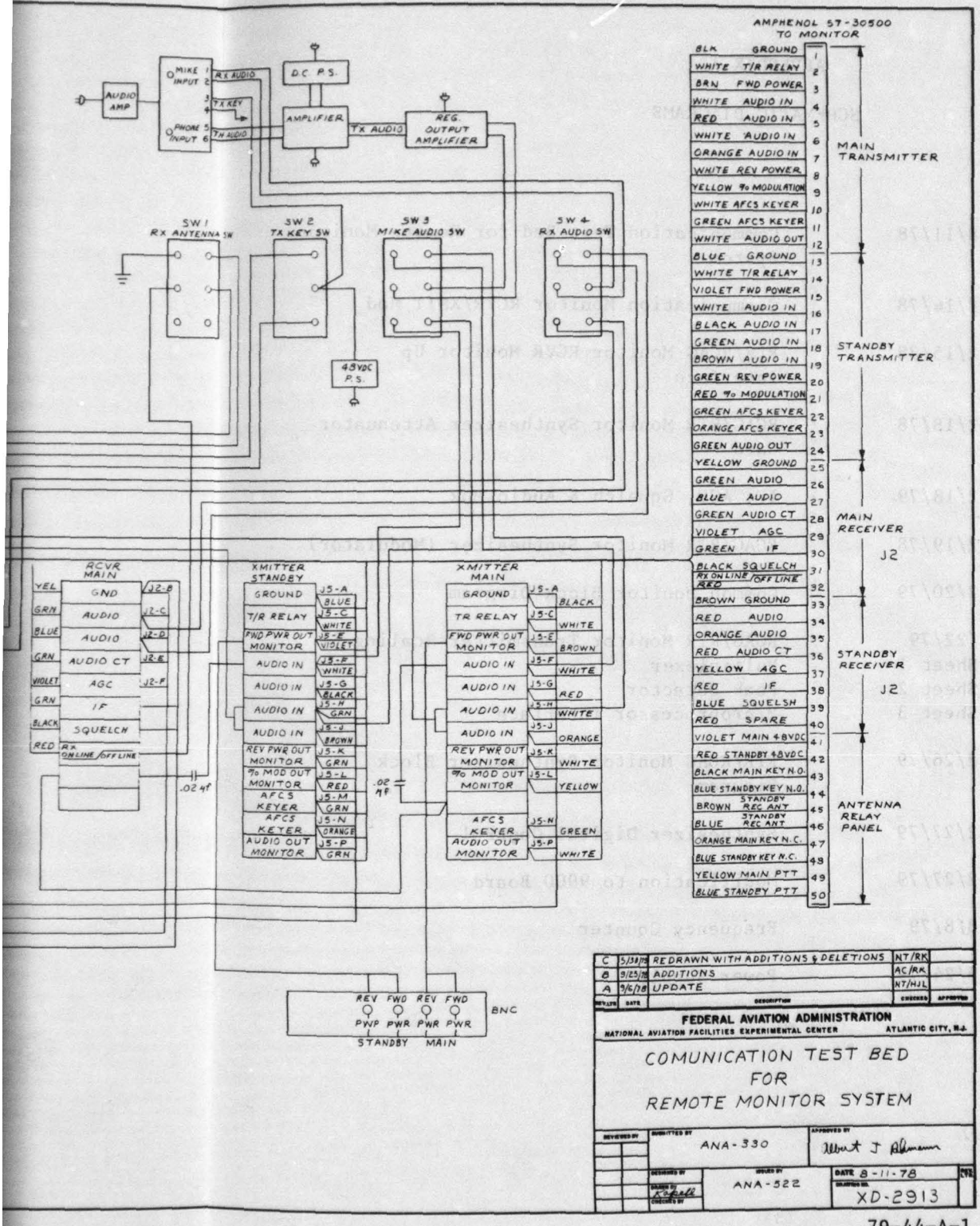

79-44-A-1

TION TEST BED FOR REMOTE MONITOR SYSTEM

2

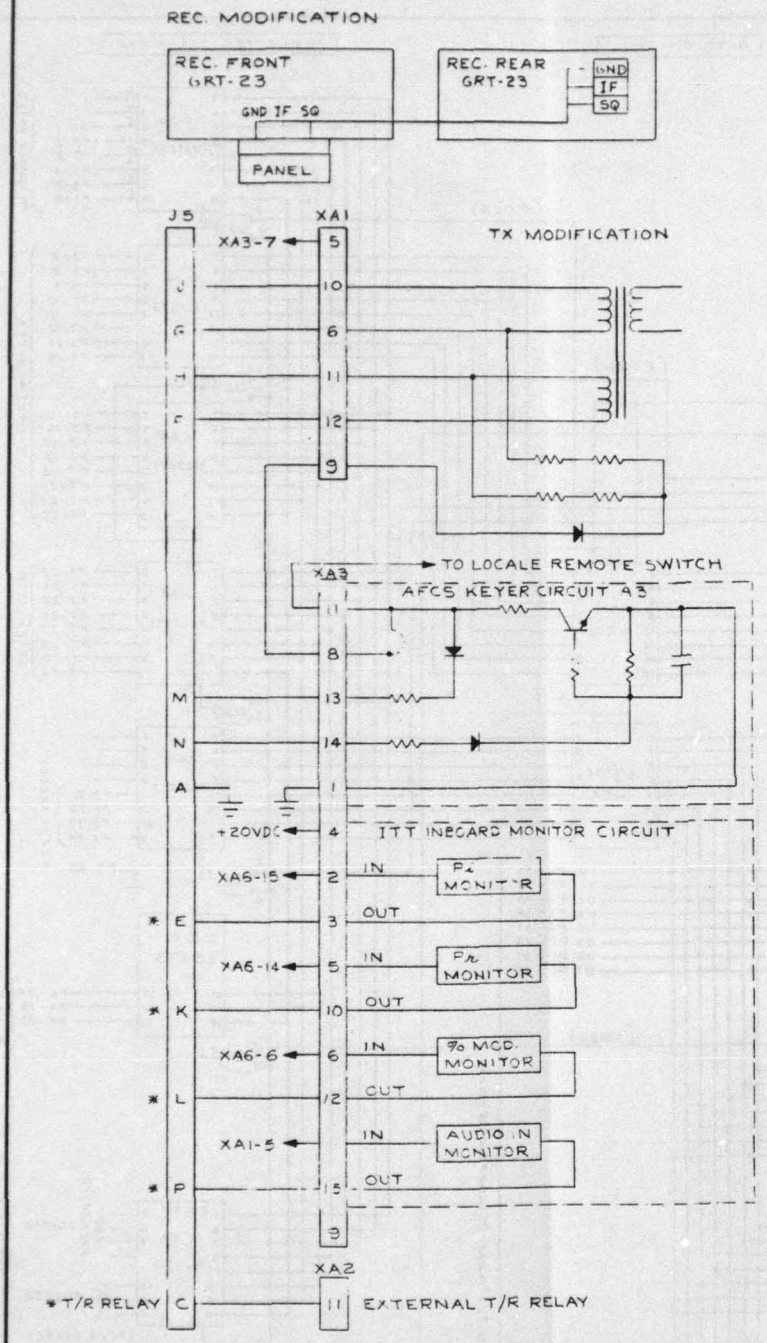

FIGURE A-2. COMMUNICATION MONITOR RECEIVER/TRANSMITTER MODIFICATION

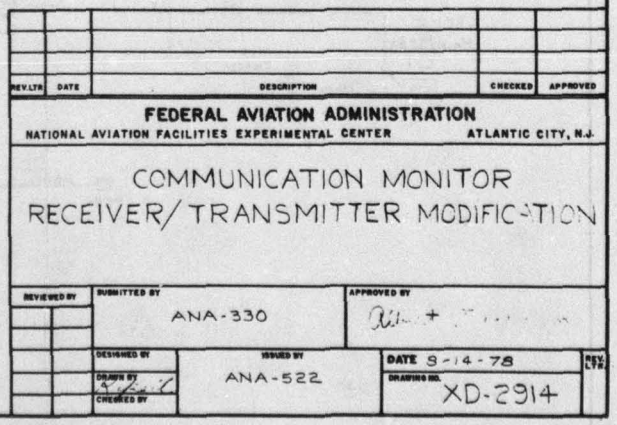

REV. LTR	DATE	DESCRIPTION	CHECKED	APPROVED

FEDERAL AVIATION ADMINISTRATION

NATIONAL AVIATION FACILITIES EXPERIMENTAL CENTER — ATLANTIC CITY, N.J.

COMMUNICATION MONITOR
RECEIVER/TRANSMITTER MODIFICATION

REVIEWED BY	SUBMITTED BY	APPROVED BY
	ANA-330	

DESIGNED BY	ISSUED BY	DATE	REV. LTR
DRAWN BY	ANA-522	8-14-78	
CHECKED BY		DRAWING NO. XD-2914	

79-44-A-2

ATION MONITOR RECEIVER/TRANSMITTER MODIFICATION

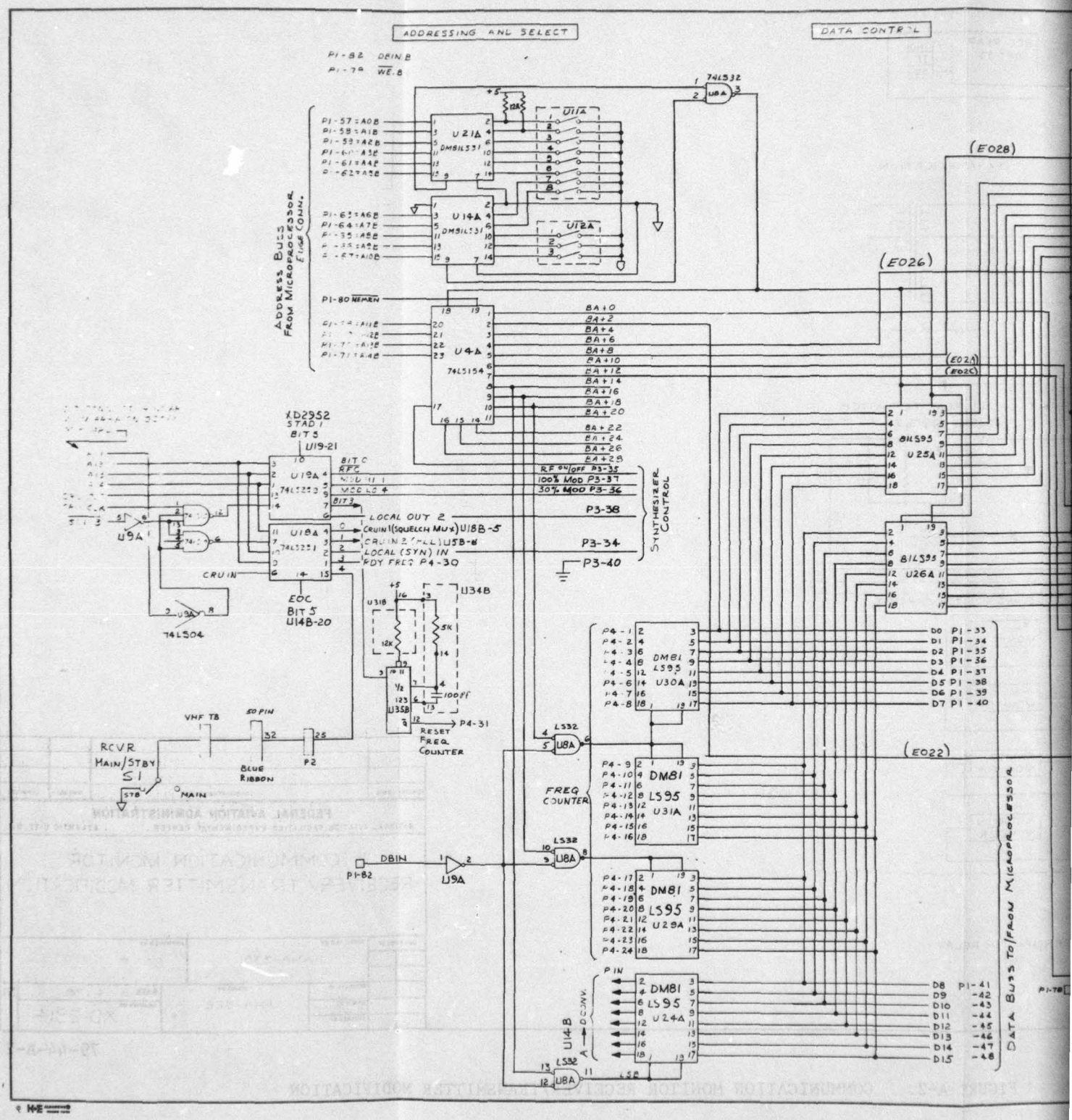

FIGURE A-3. RTR/RCAG MONITOR RECEIVER MONITOR MICROPRO

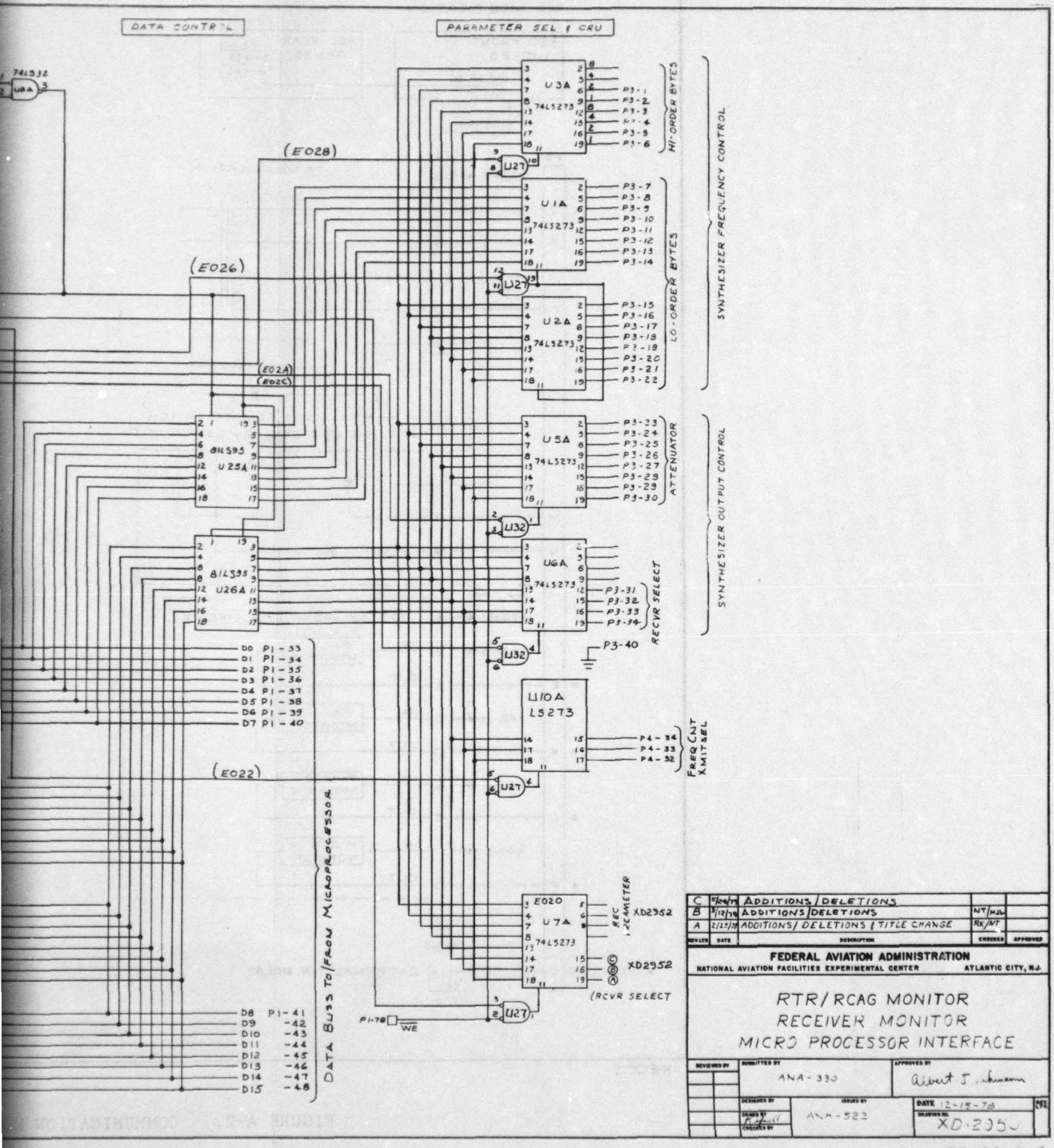

REV.LTR	DATE	DESCRIPTION	CHECKED	APPROVED
C	12/19/78	ADDITIONS / DELETIONS	NT/NJL	
B	9/12/78	ADDITIONS / DELETIONS	NT/NJL	
A	2/23/78	ADDITIONS / DELETIONS / TITLE CHANGE	RK/NT	

FEDERAL AVIATION ADMINISTRATION
NATIONAL AVIATION FACILITIES EXPERIMENTAL CENTER — ATLANTIC CITY, N.J.

RTR/RCAG MONITOR RECEIVER MONITOR MICRO PROCESSOR INTERFACE

REVIEWED BY	SUBMITTED BY	APPROVED BY
	ANA-330	Albert J. Johnson
DESIGNED BY	ISSUED BY	DATE 12-19-78
DRAWN BY	ANA-522	DRAWING NO. XD-2350
CHECKED BY		

79-44-A-3

G MONITOR RECEIVER MONITOR MICROPROCESSOR INTERFACE

2

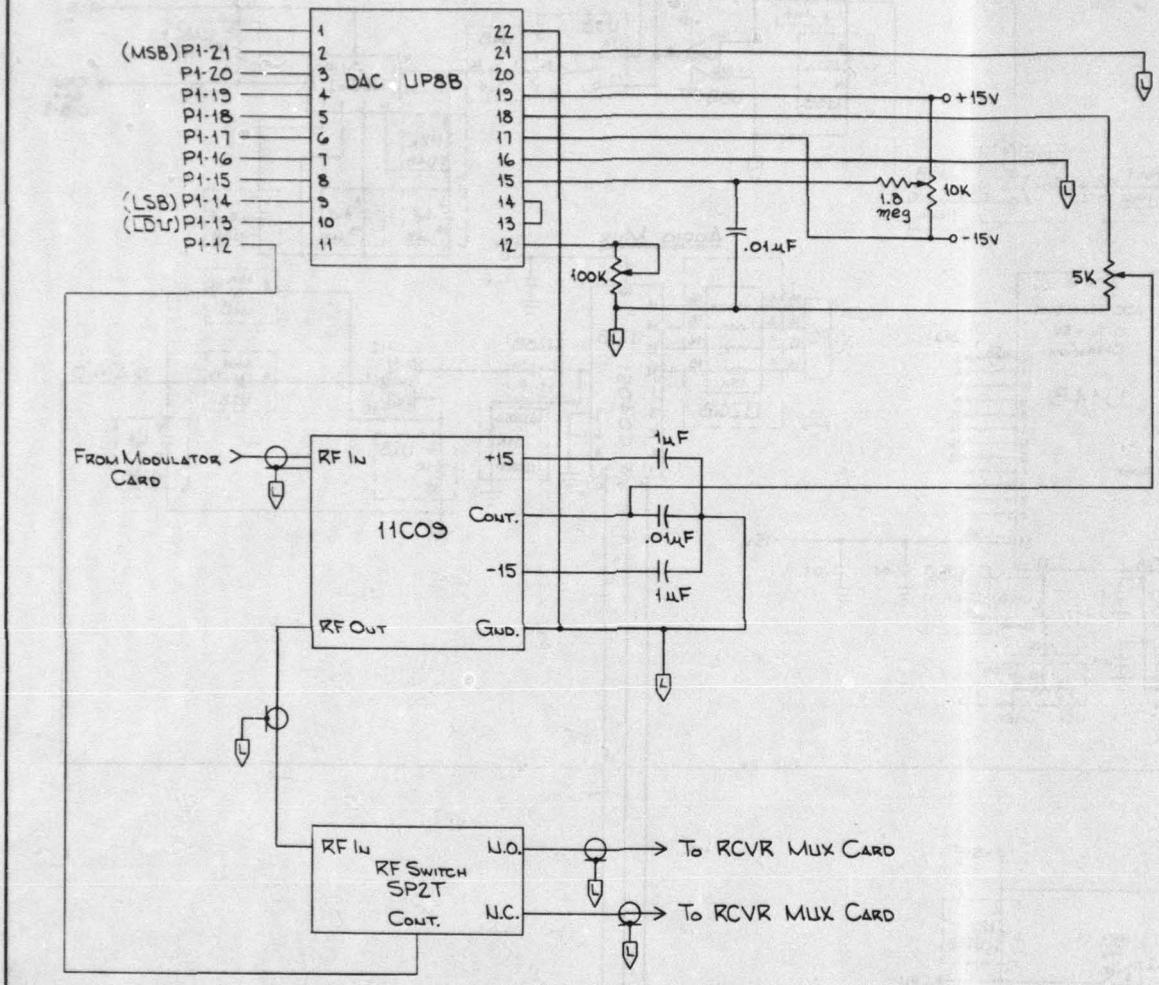

NOTE: ALL COAX CABLES ARE TYPE RG174 & ALL COAX CONNECTORS ARE TYPE SMA FEMALES.

FIGURE A-4. RCAG/RTR MONITOR SYNTHESIZER (ATTENU

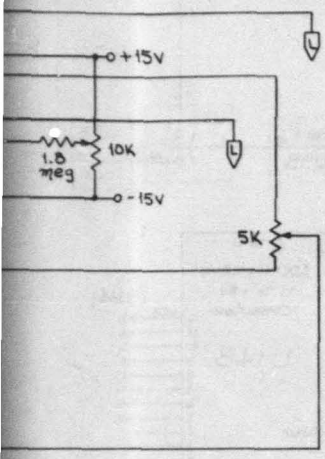

CARD

CARD

RG174 &
Type SMA Females.

REVISIONS				
REV LTR	DATE	DESCRIPTION	CHECKED	APPROVED
A	9/24/78	ADDITIONS - DELETIONS	MT/HJL	

FEDERAL AVIATION ADMINISTRATION
NATIONAL AVIATION FACILITIES EXPERIMENTAL CENTER ATLANTIC CITY, N.J.

RCAG/RTR MONITOR

SYNTHESIZER (ATTENUATOR CARD)

REVIEWED BY	SUBMITTED BY	APPROVED BY
	ANA-330	Albert J Reinmann ALBERT REINMANN
DESIGNED BY	ISSUED BY	DATE 12-18-78
DRAWN BY JUTWIAK CHECKED BY	ANA-522	DRAWING NO. XD-2951

79-44-A-4

-4. RCAG/RTR MONITOR SYNTHESIZER (ATTENUATOR CARD)

2

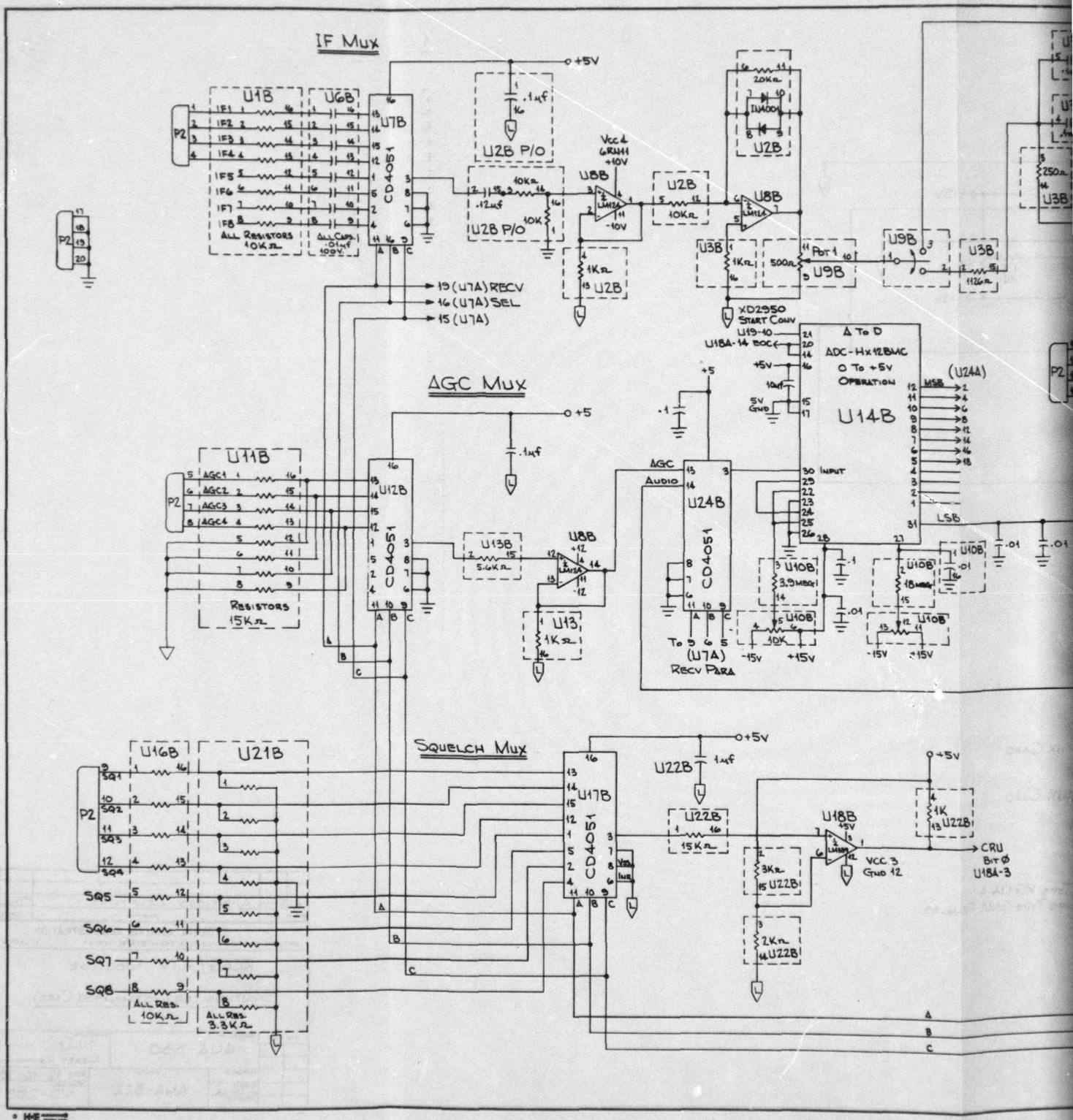

FIGURE A-5. IF, AGC, SQUELCH AND AUDIO M

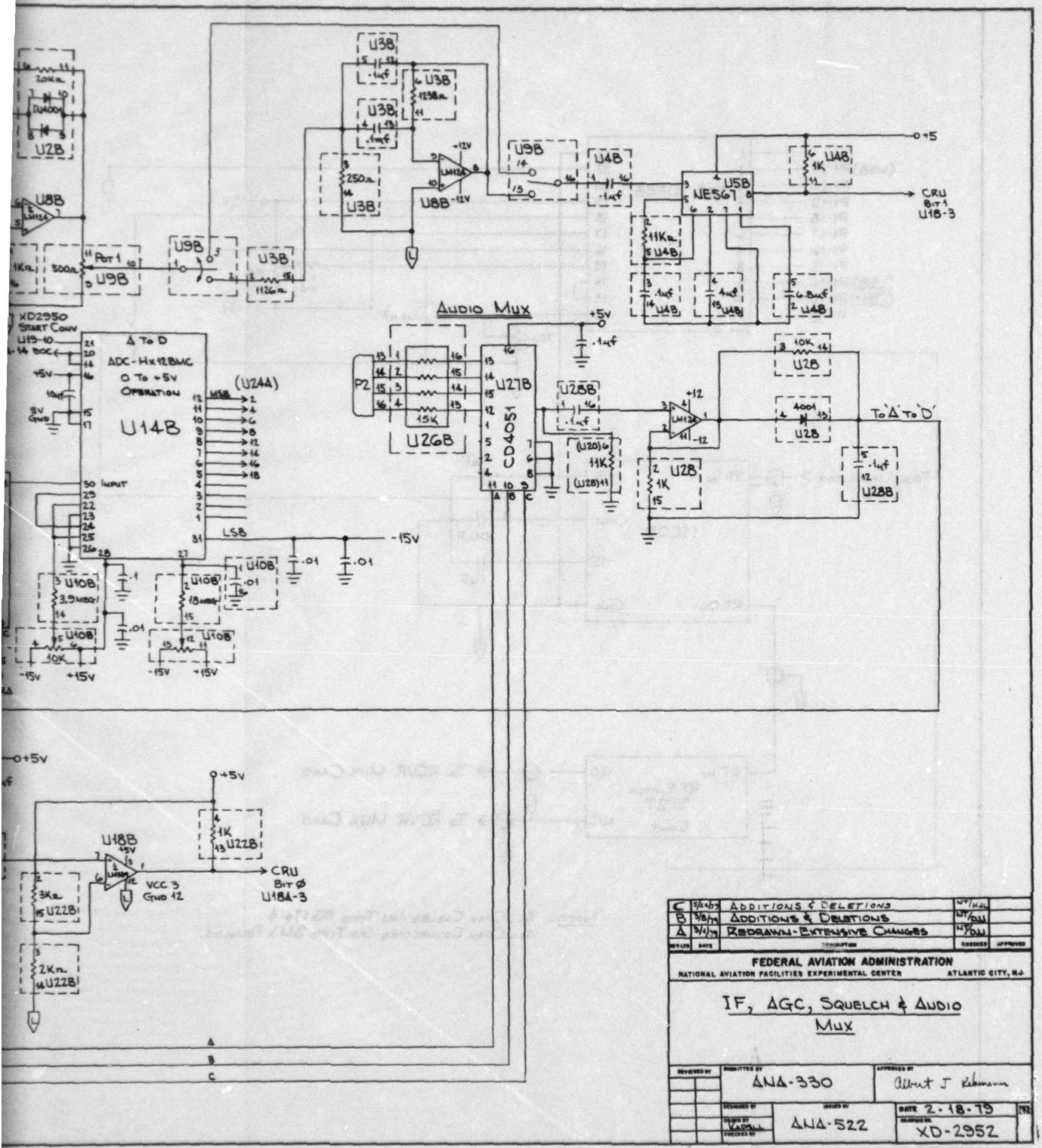

REVISIONS			
C	5/24/79	Additions & Deletions	WY/HAL
B	3/8/79	Additions & Deletions	WY/DLL
A	3/1/79	Redrawn - Extensive Changes	WY/DLL
REVISIONS	DATE	DESCRIPTION	CHECKED / APPROVED

FEDERAL AVIATION ADMINISTRATION
NATIONAL AVIATION FACILITIES EXPERIMENTAL CENTER — ATLANTIC CITY, N.J.

IF, AGC, SQUELCH & AUDIO MUX

REVIEWED BY	SUBMITTED BY: ANA-330	APPROVED BY: Albert J Kleinman
DESIGNED BY	ISSUED BY: ANA-522	DATE: 2-18-79
DRAWN BY: LANDELL	CHECKED BY	DRAWING NO.: XD-2952

79-44-A-5

-5. IF, AGC, SQUELCH AND AUDIO MUX

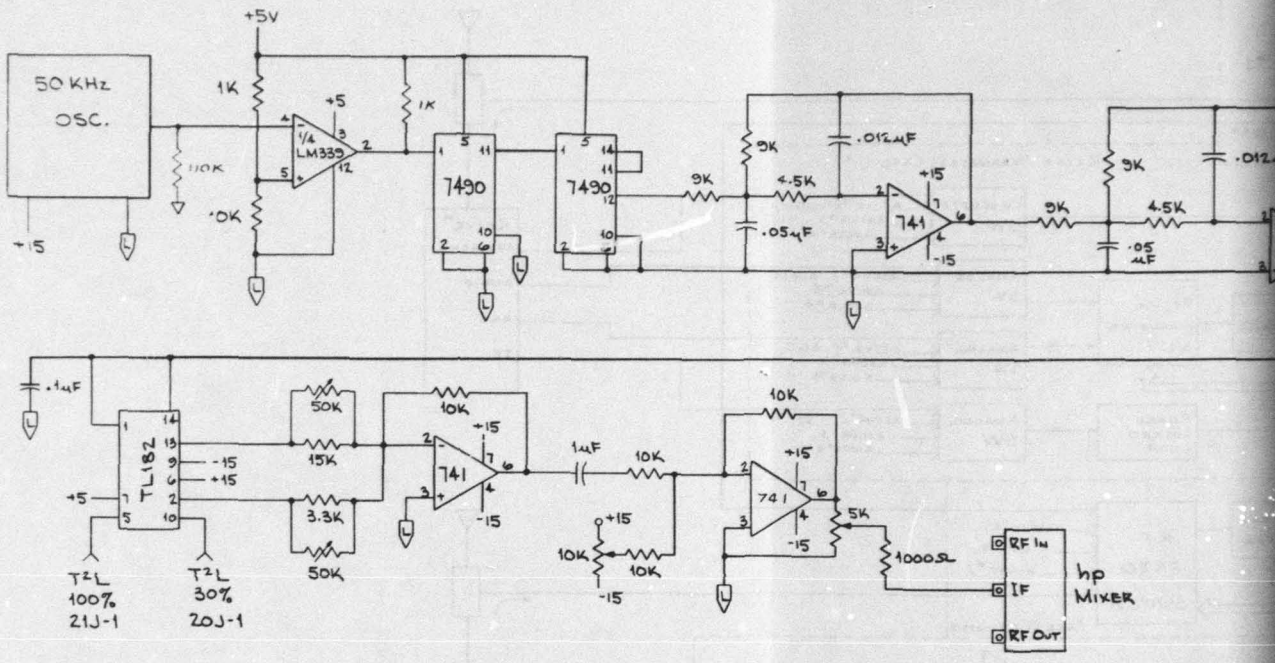

FIGURE A-6. RCAG/RTR MONITOR SYNTHESIZER (MODULA

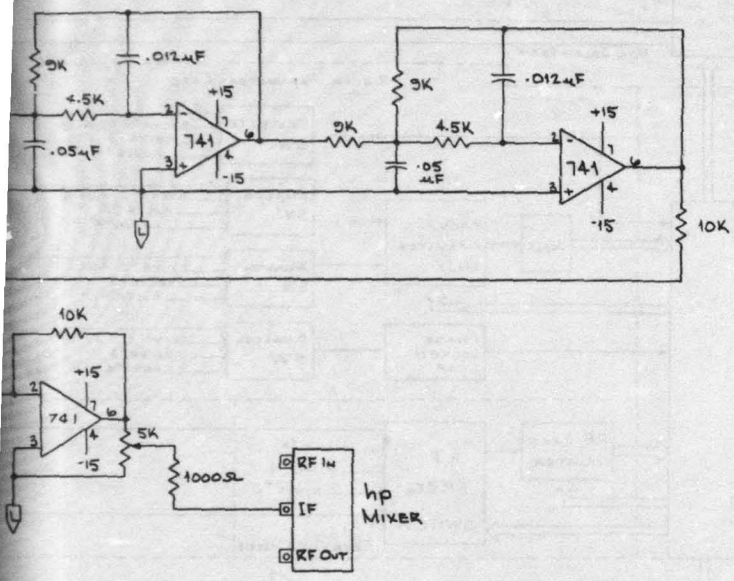

REV LTR	DATE	DESCRIPTION	CHECKED	APPROVED
A	9/24/79	ADDITIONS - DELETIONS	MT/HJL	

FEDERAL AVIATION ADMINISTRATION
NATIONAL AVIATION FACILITIES EXPERIMENTAL CENTER ATLANTIC CITY, N.J.

RCAG / RTR MONITOR

SYNTHESIZER (MODULATOR CARD)

REVIEWED BY	SUBMITTED BY	APPROVED BY
	ANA-330	Albert J Rehmann ALBERT REHMANN
DESIGNED BY	ISSUED BY	DATE 12-19-78
DRAWN BY M.E.N/A.K. CHECKED BY	ANA-522	DRAWING NO. XD-2953

79-44-A-6

RCAG/RTR MONITOR SYNTHESIZER (MODULATOR CARD)

2

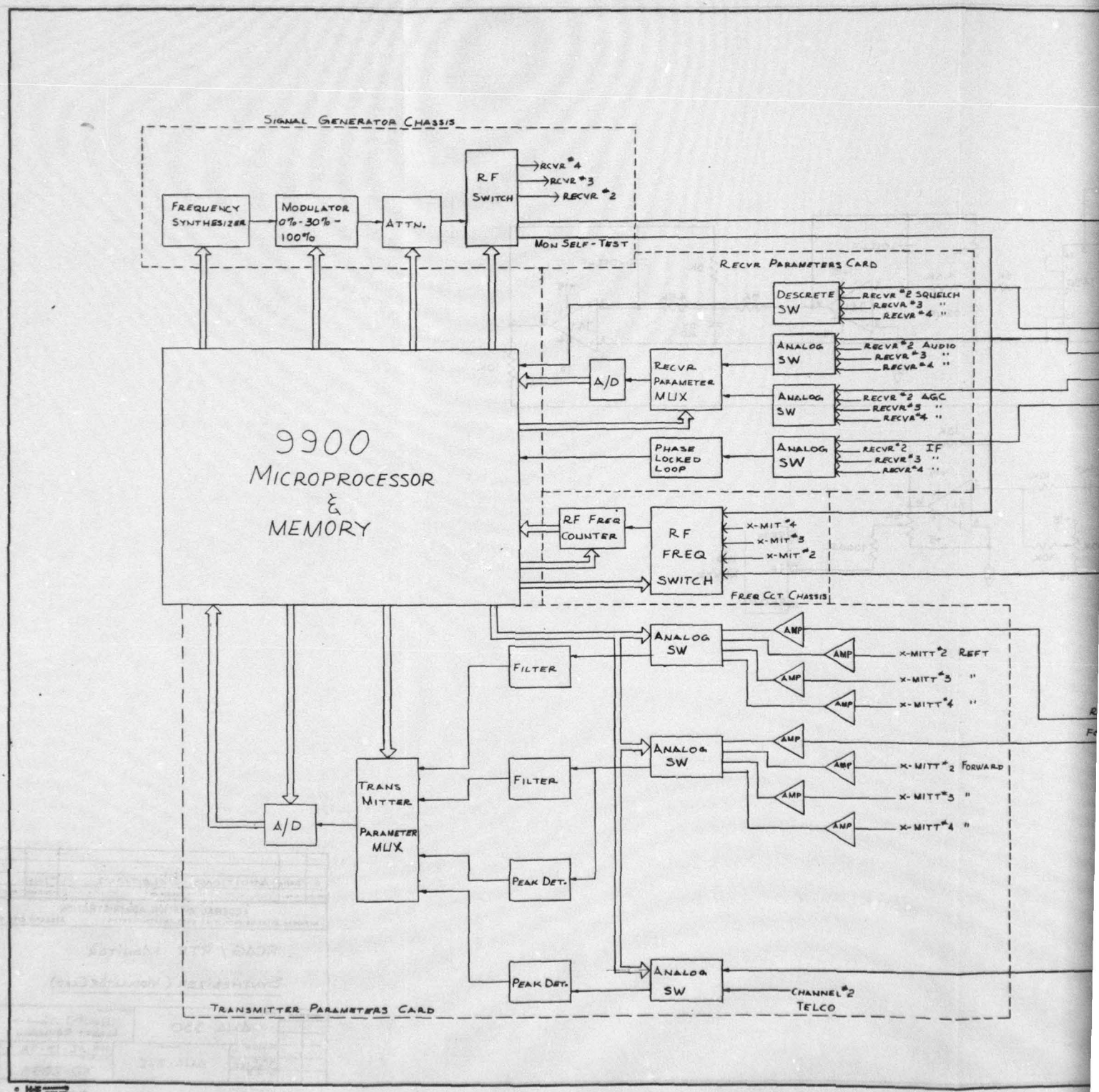

FIGURE A-7. COMMUNICATIONS BLOCK DIAGRAM

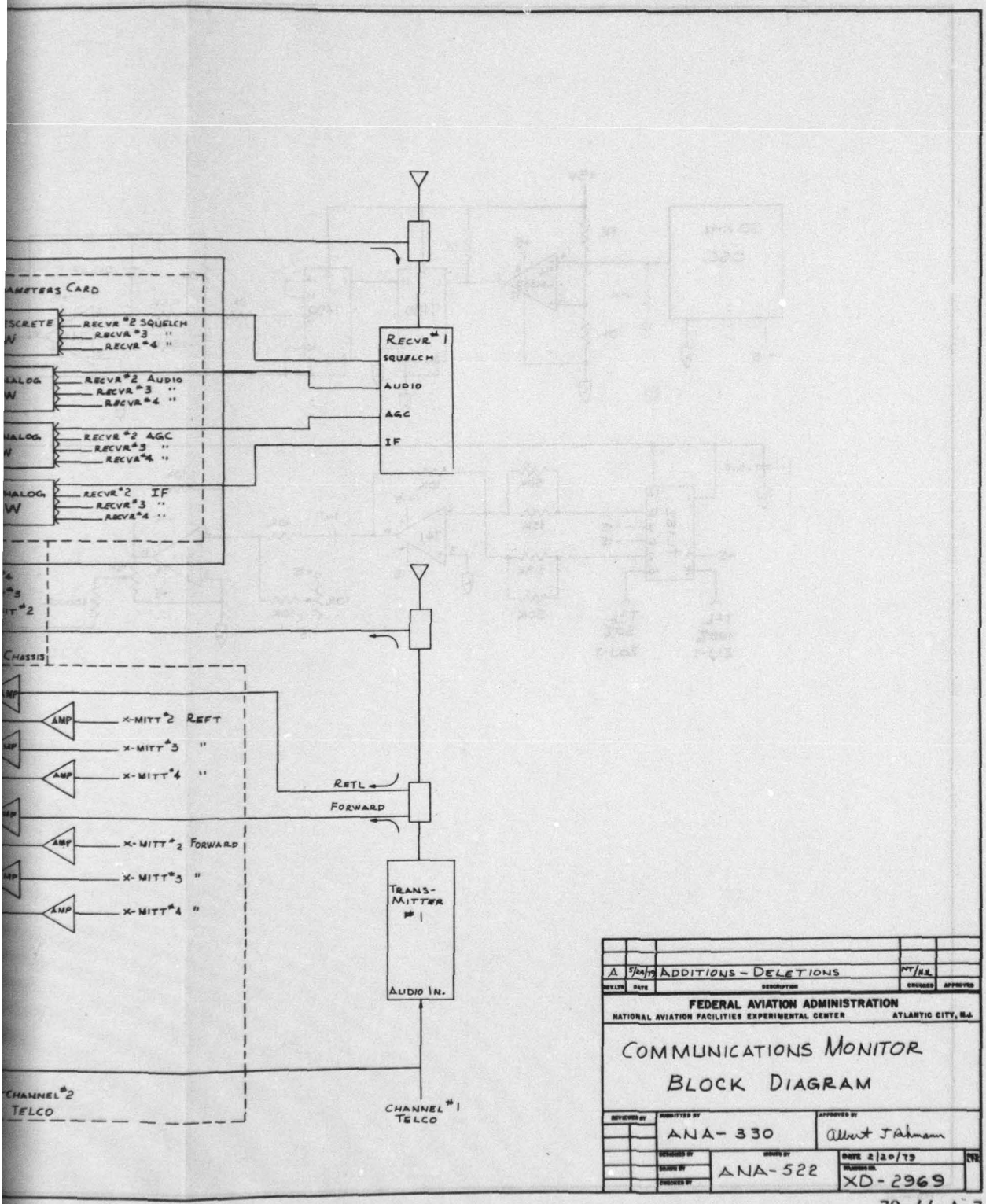

REVLTR	DATE	DESCRIPTION	CHECKED	APPROVED
A	5/24/79	ADDITIONS - DELETIONS	NT/HL	

FEDERAL AVIATION ADMINISTRATION
NATIONAL AVIATION FACILITIES EXPERIMENTAL CENTER ATLANTIC CITY, N.J.

COMMUNICATIONS MONITOR
BLOCK DIAGRAM

REVIEWED BY	SUBMITTED BY	APPROVED BY
	ANA-330	Albert J Ahmann
DESIGNED BY	DRAWN BY	DATE 2/20/79
DRAWN BY	ANA-522	DRAWING NO. XD-2969
CHECKED BY		

79-44-A-7

COMMUNICATIONS BLOCK DIAGRAM

2

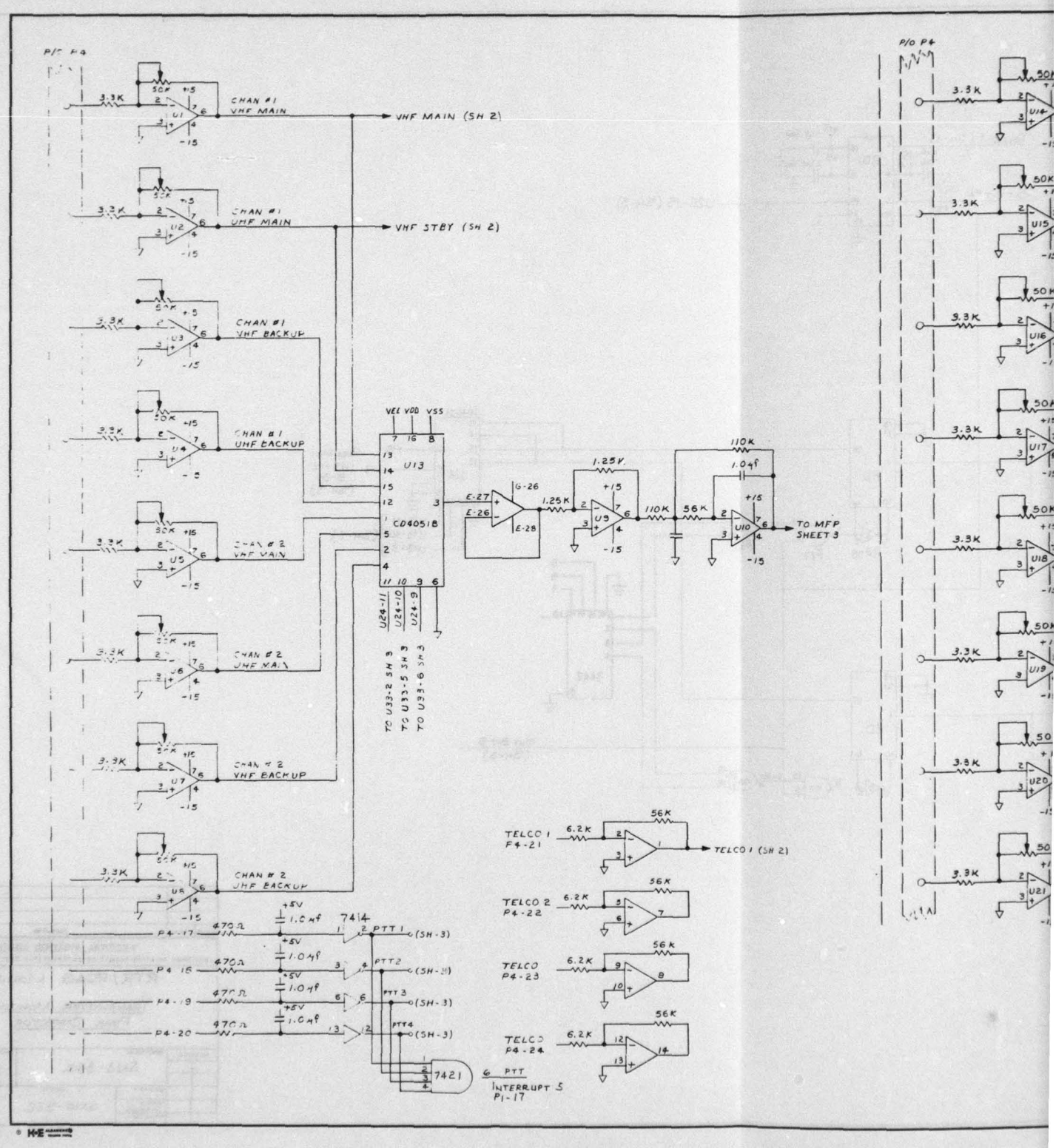

FIGURE A-8. RCAG/RTR MONITOR TRANSMITTER MONITOR S

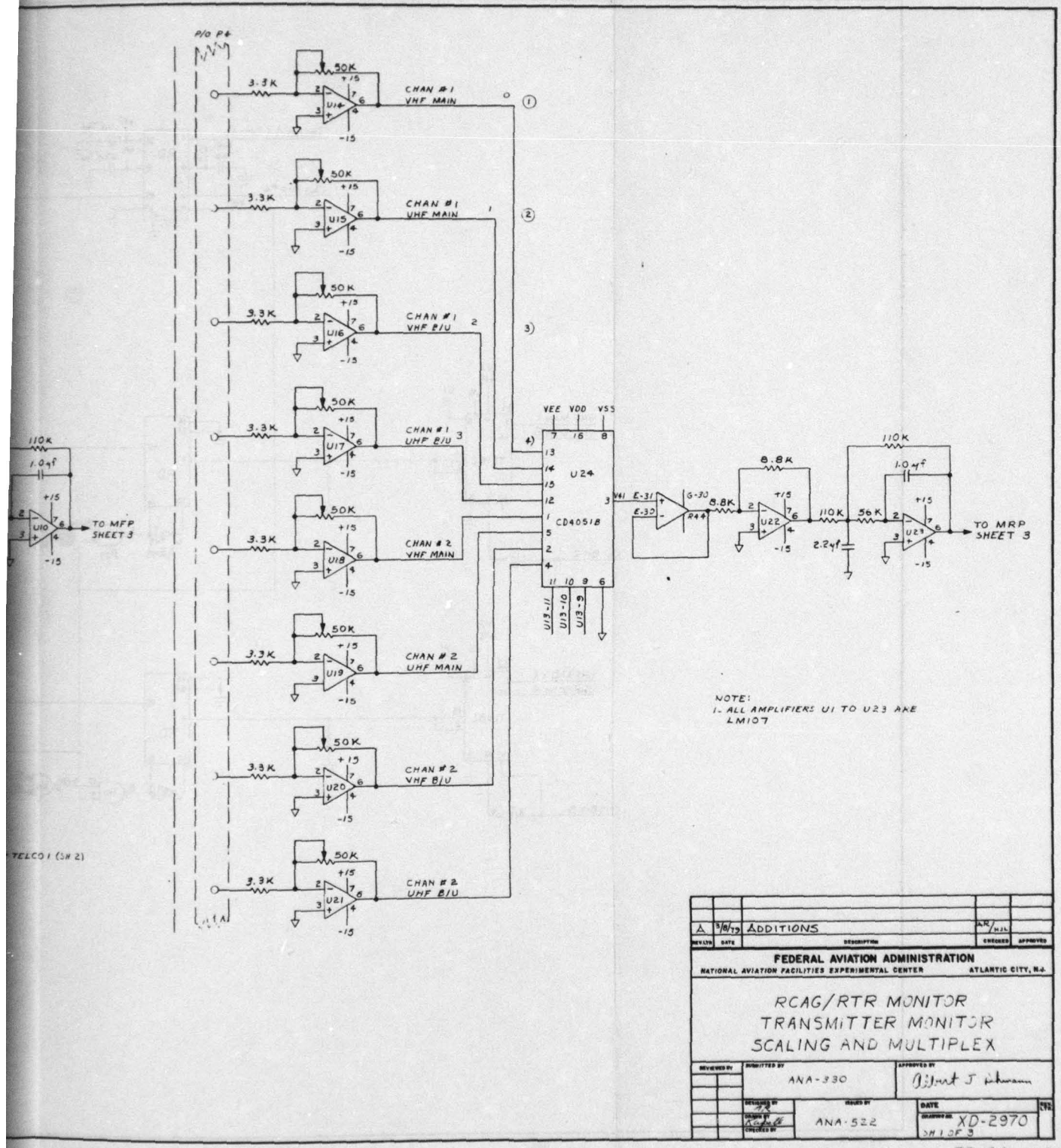

79-44-A-8

TR MONITOR TRANSMITTER MONITOR SCALING AND MULTIPLEX

2

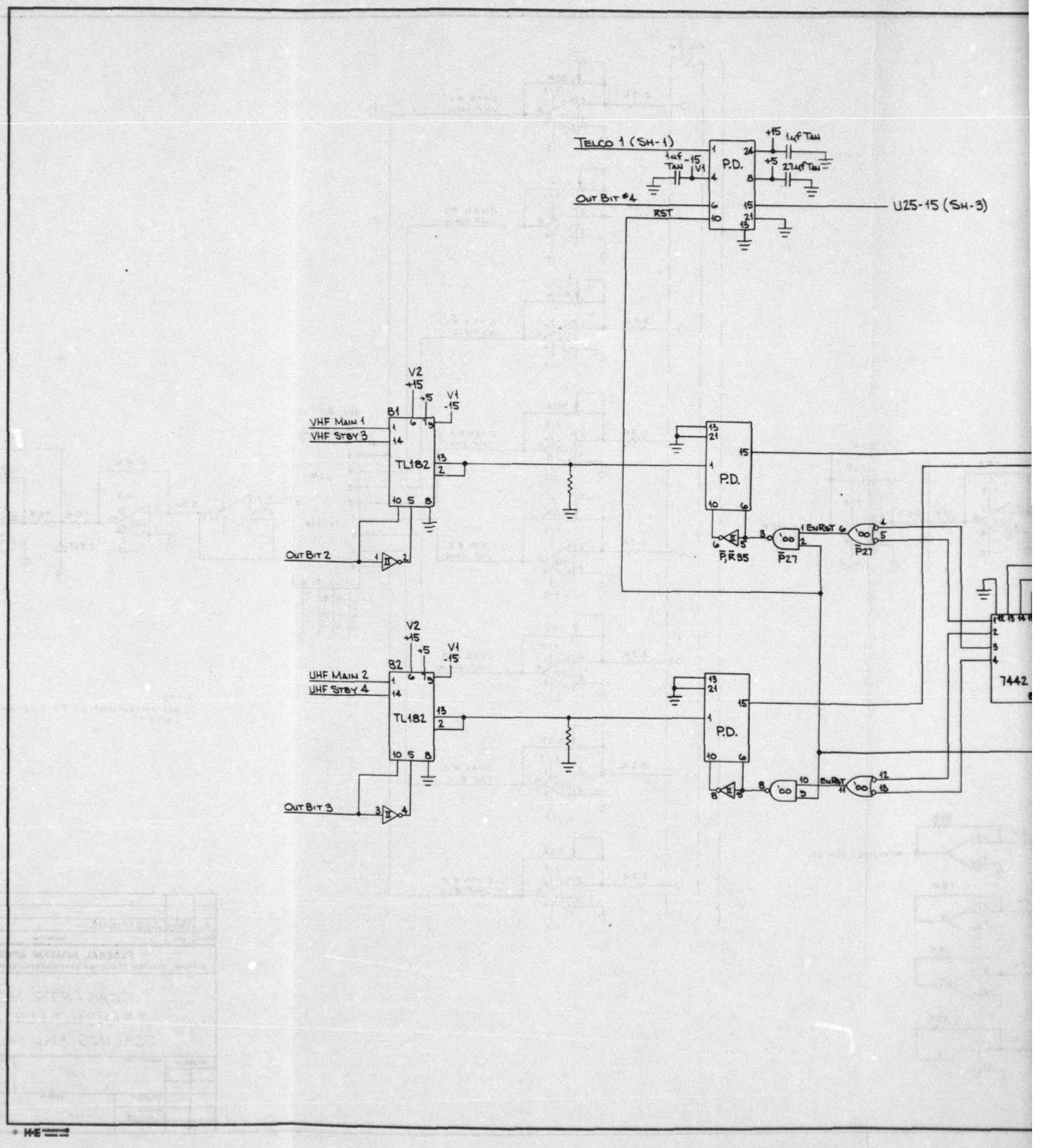

FIGURE A-9. RCAG/RTR MONITOR TRANSMITTER MONIT

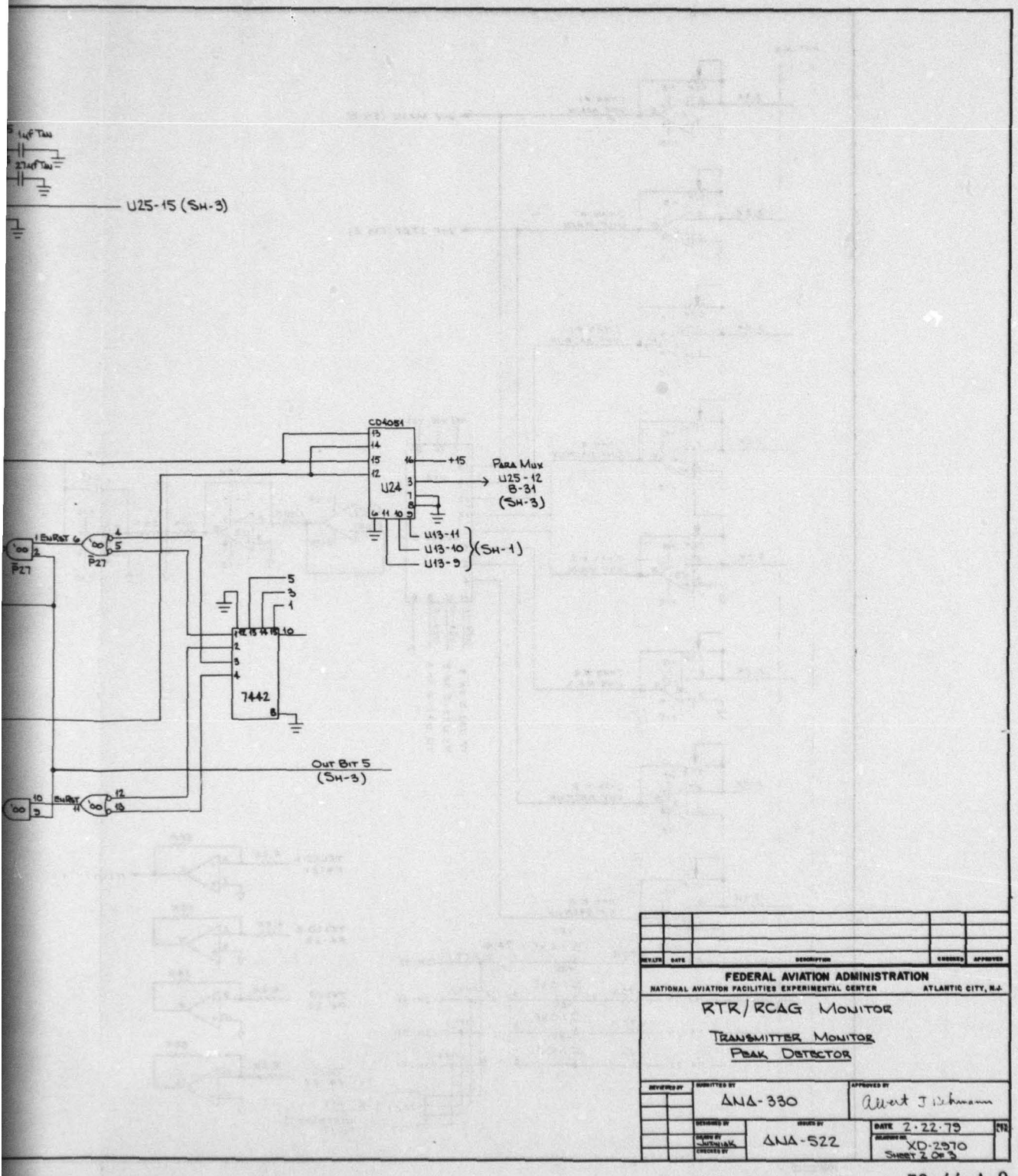

REVISIONS	DATE	DESCRIPTION	CHECKED	APPROVED

FEDERAL AVIATION ADMINISTRATION
NATIONAL AVIATION FACILITIES EXPERIMENTAL CENTER — ATLANTIC CITY, N.J.

RTR/RCAG MONITOR

TRANSMITTER MONITOR
PEAK DETECTOR

REVIEWED BY	SUBMITTED BY	APPROVED BY
	ANA-330	Albert J Uehmann
DESIGNED BY	ISSUED BY	DATE 2-22-79
DRAWN BY WISNIAK	ANA-522	DRAWING NO. XD-2970 SHEET 2 OF 3
CHECKED BY		

79-44-A-9

ONITOR TRANSMITTER MONITOR PEAK DETECTOR

4

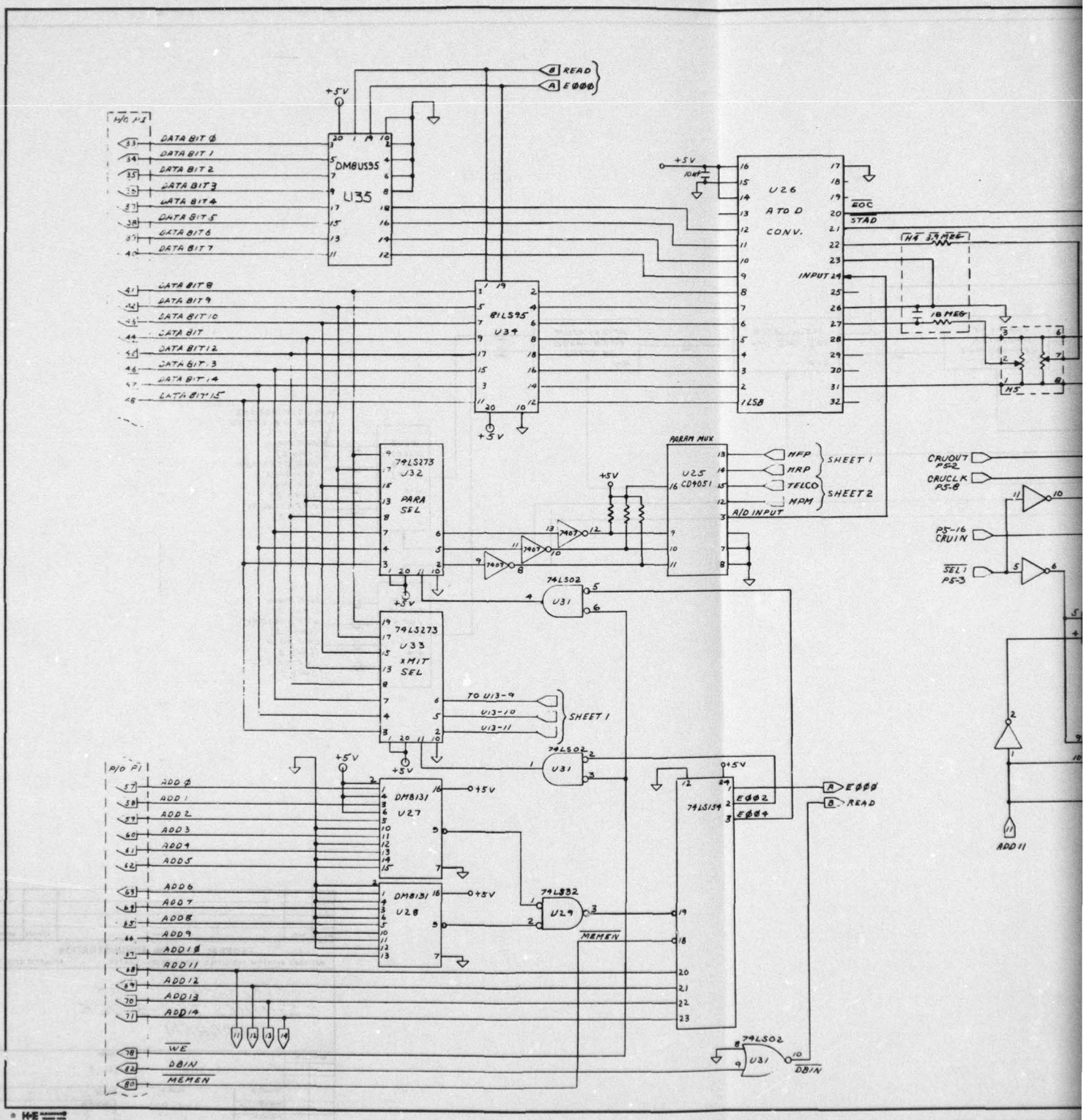

FIGURE A-10. RCAG/RTR MONITOR TRANSMITTER MONITOR MICROPRO

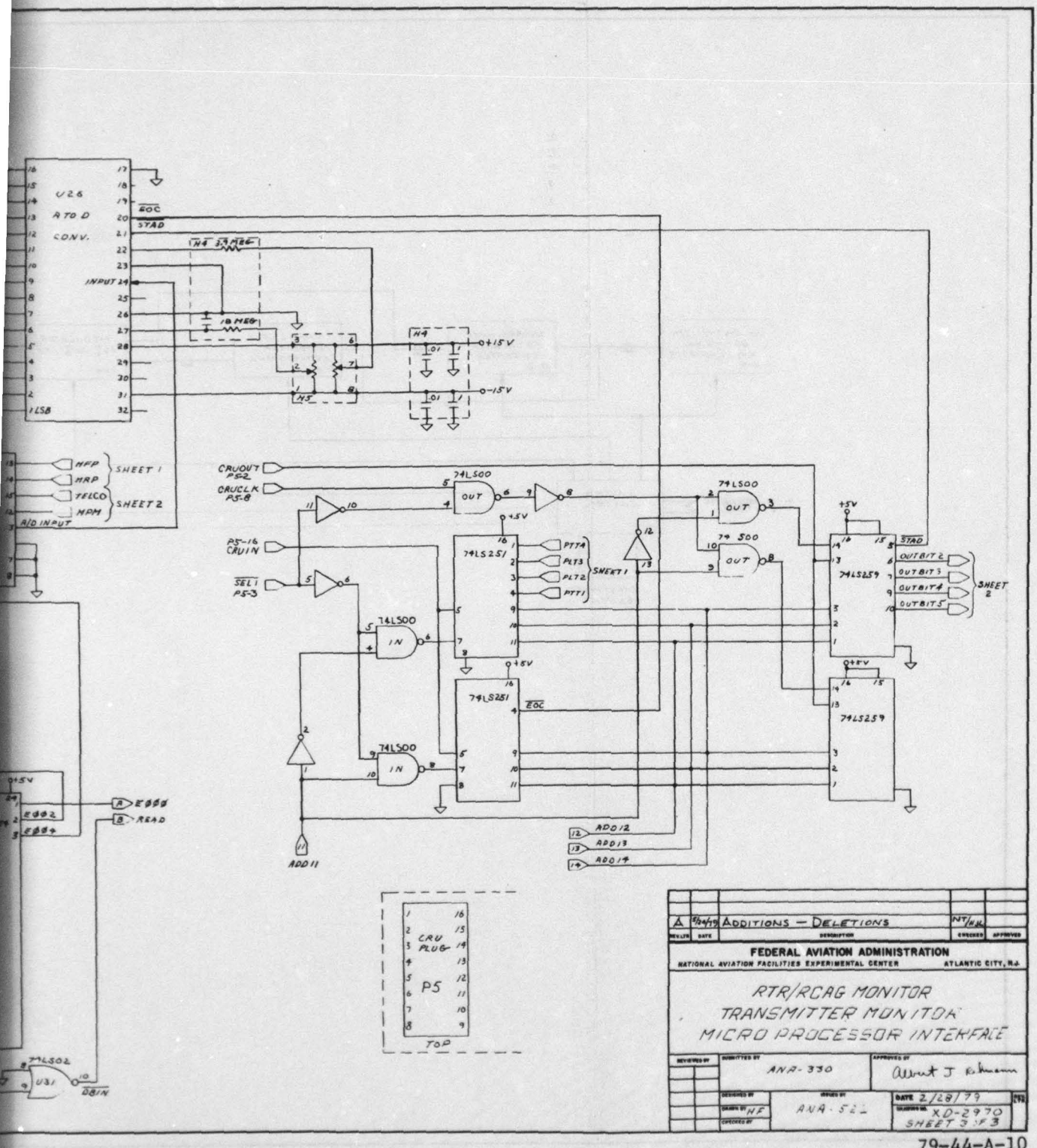

79-44-A-10

NITOR TRANSMITTER MONITOR MICROPROCESSOR INTERFACE

2

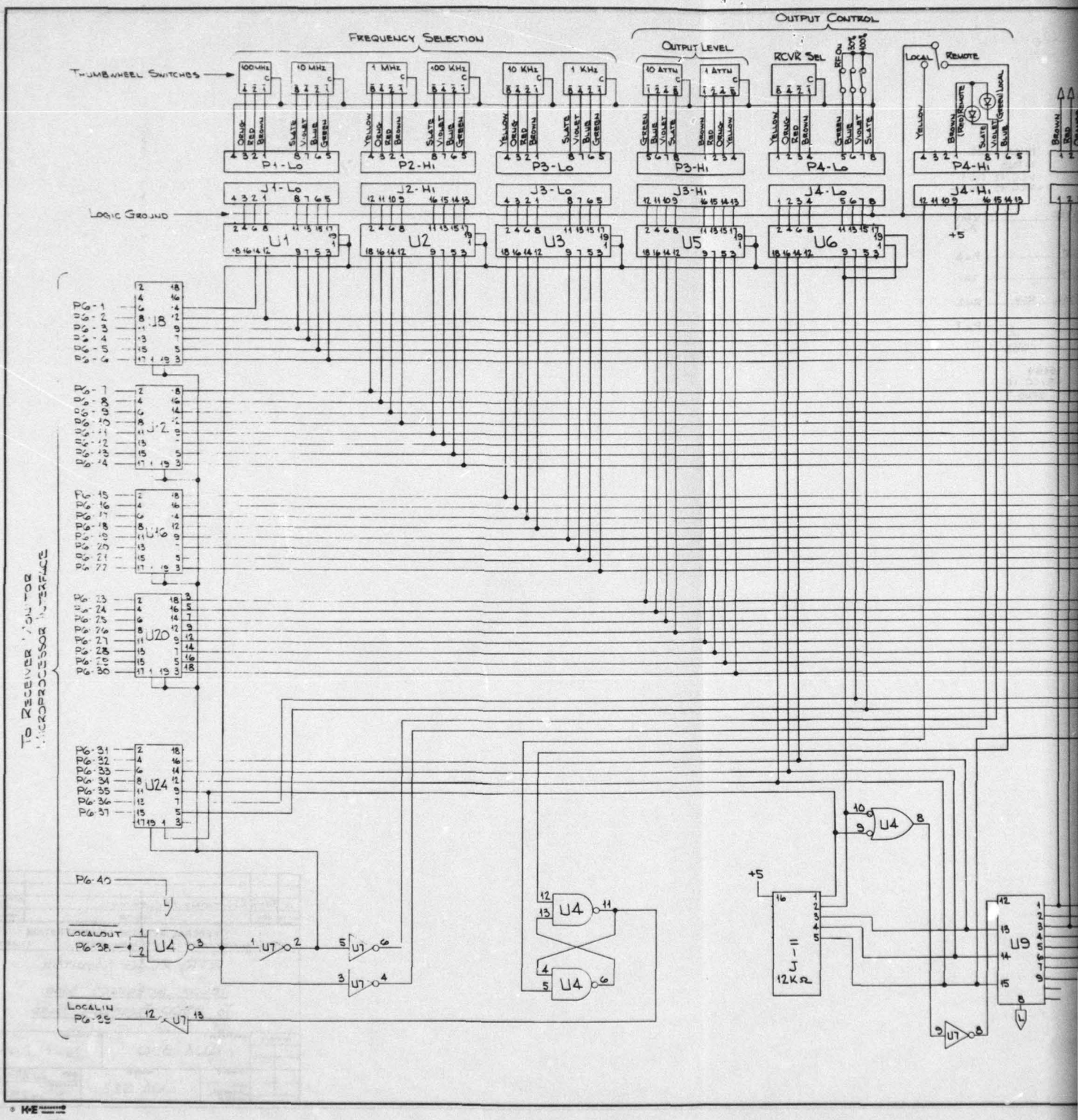

FIGURE A-12. RTR/RCAG MONITOR SYNTHESIZER DIGITAL

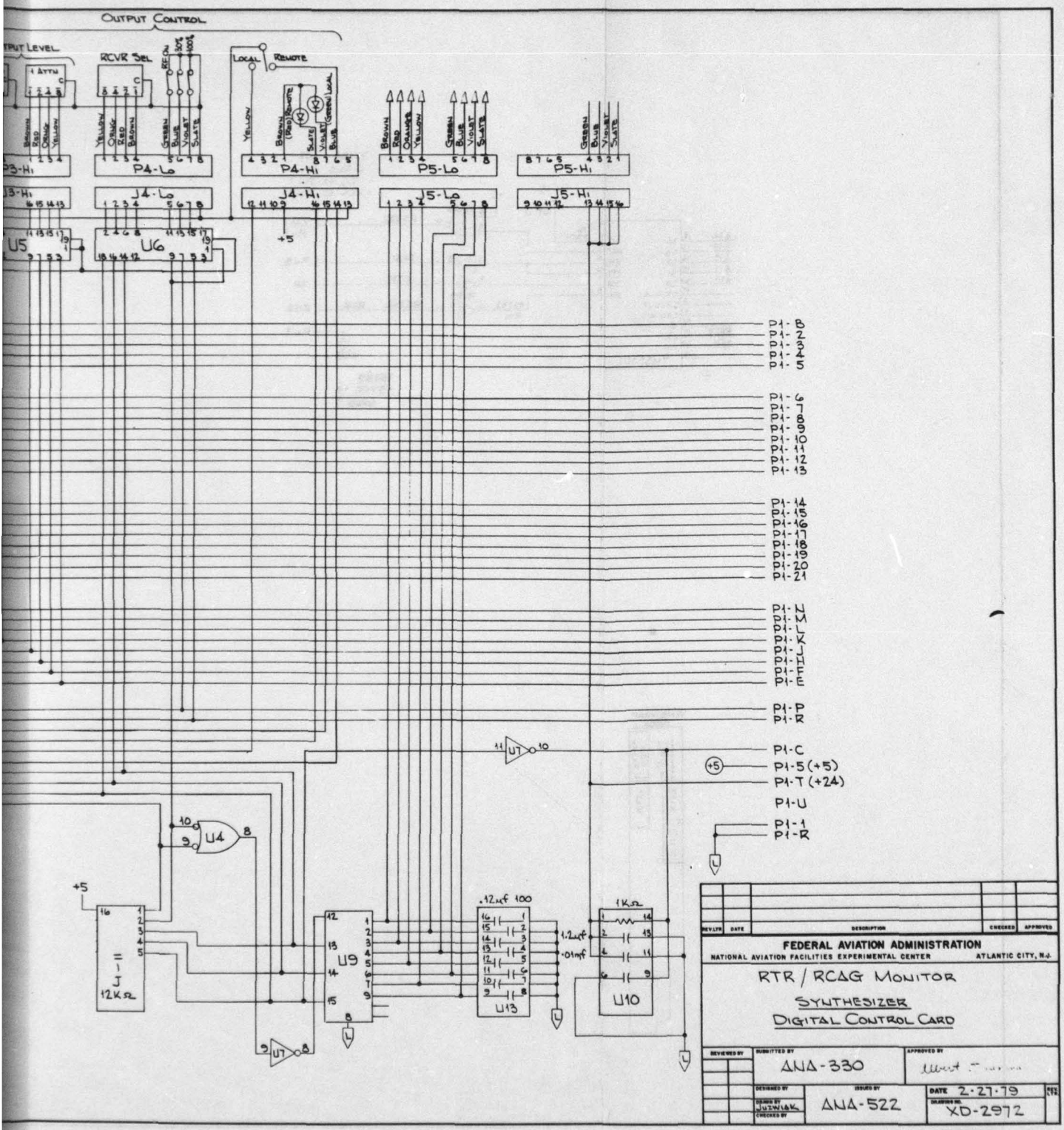

79-45-A-12

RTR/RCAG MONITOR SYNTHESIZER DIGITAL CONTROL CARD

2

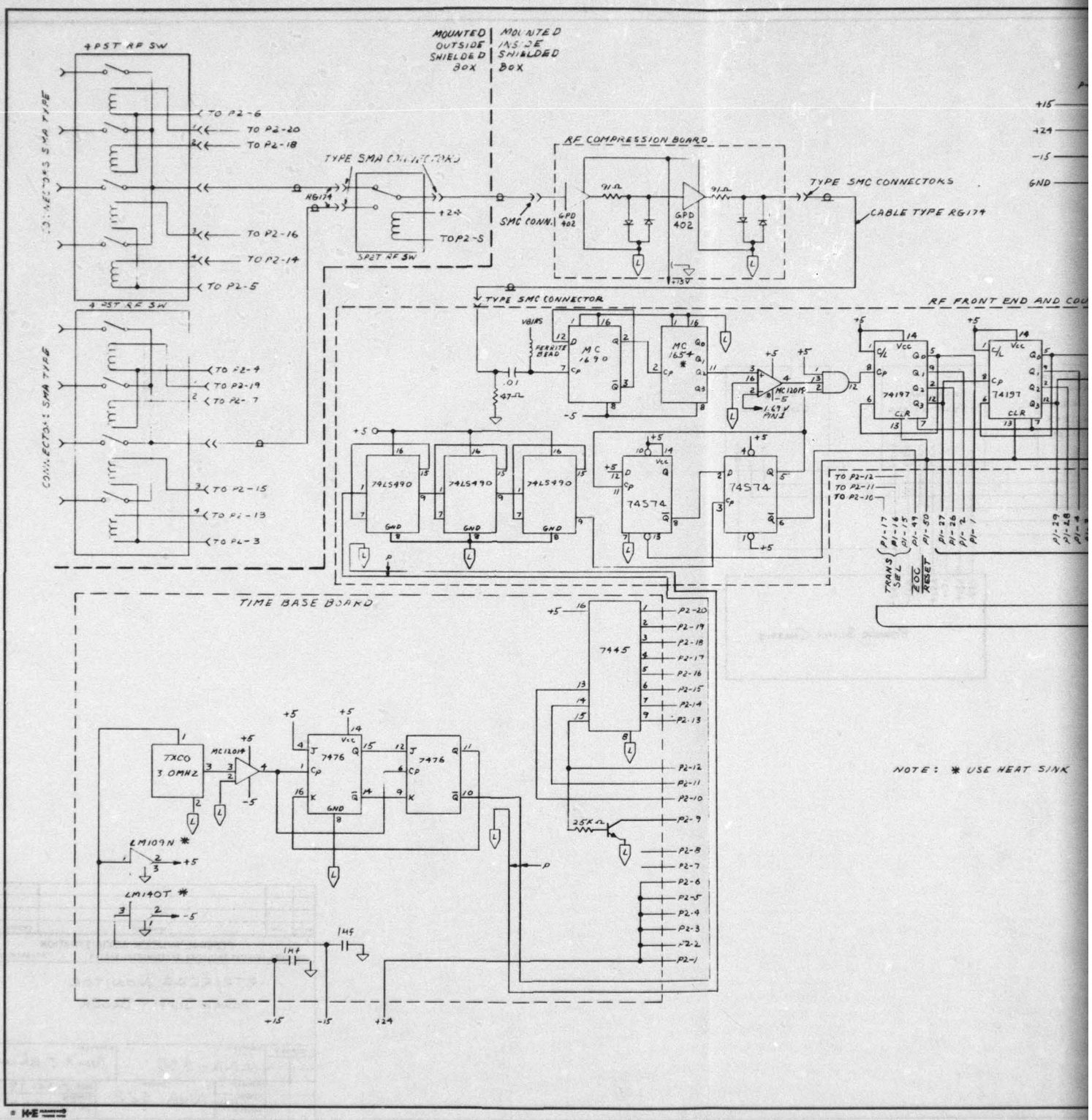

FIGURE A-14. RTR/RCAG MONITOR FREQUENCY COUN

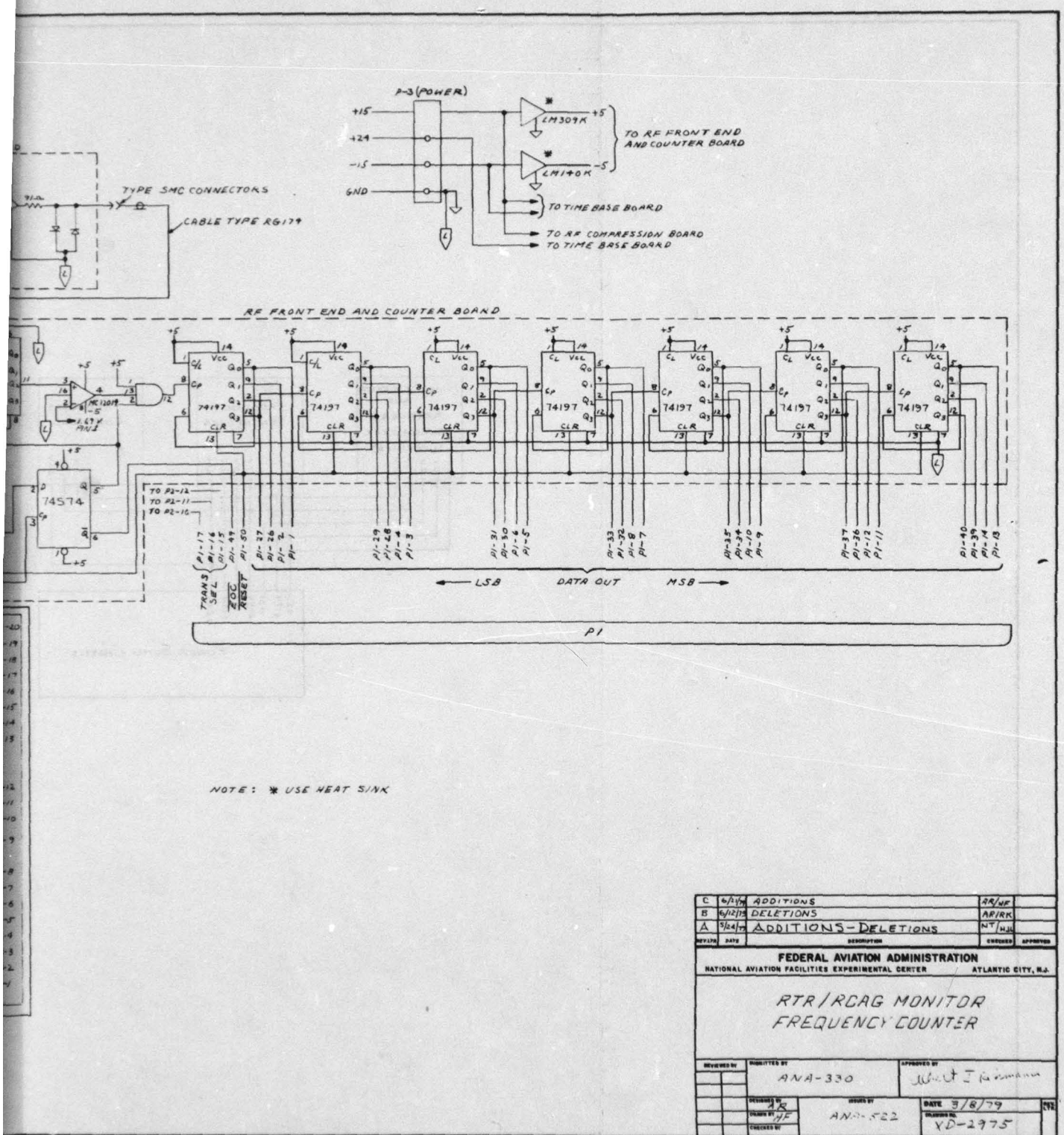

79-44-A-14

14. RTR/RCAG MONITOR FREQUENCY COUNTER

2

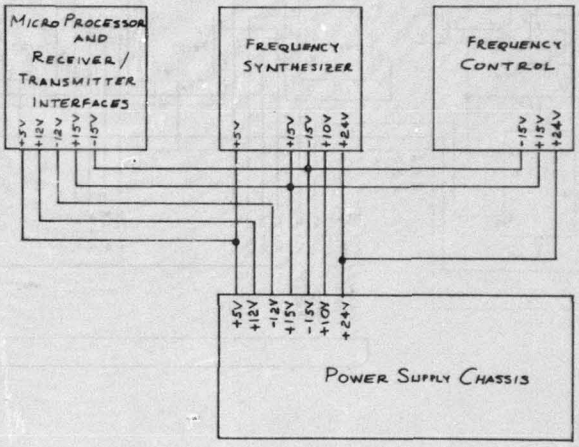

FIGURE A-15. RTR/RCAG MONITOR POWER SUPPLY BLOCK

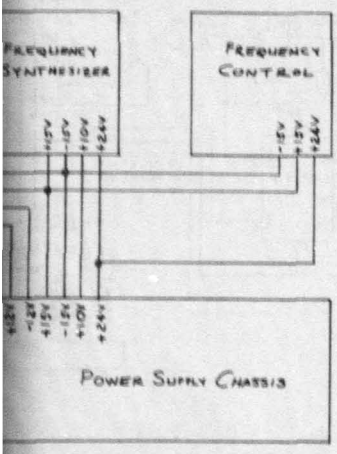

FEDERAL AVIATION ADMINISTRATION
NATIONAL AVIATION FACILITIES EXPERIMENTAL CENTER — ATLANTIC CITY, N.J.

RTR/RCAG MONITOR
POWER SUPPLY BLOCK

SUBMITTED BY	ANA-330
APPROVED BY	Albert J Ahrens
DRAWN BY	ANA-522
DATE	5-24-79
DRAWING NO.	XD-2993

79-44-A-15

RTR/RCAG MONITOR POWER SUPPLY BLOCK

APPENDIX B

SOFTWARE FLOW CHARTS

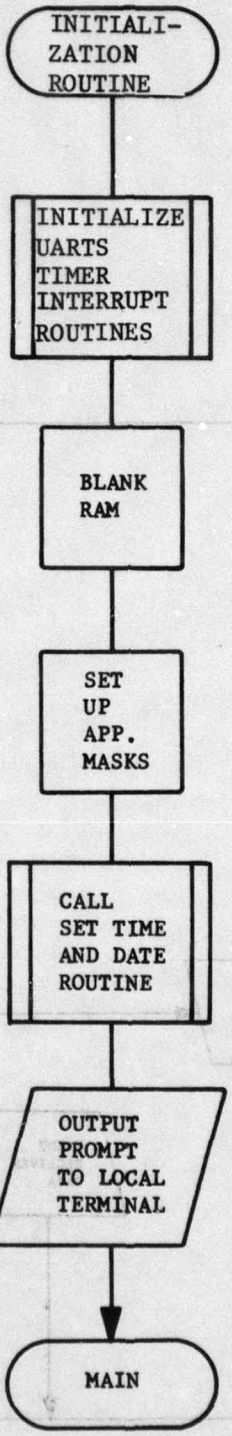
INITIALI-
ZATION
ROUTINE
INITIALIZE
UARTS
TIMER
INTERRUPT
ROUTINES
BLANK
RAM
SET
UP
APP.
MASKS
CALL
SET TIME
AND DATE
ROUTINE
OUTPUT
PROMPT
TO LOCAL
TERMINAL
MAIN

79-44-B-1

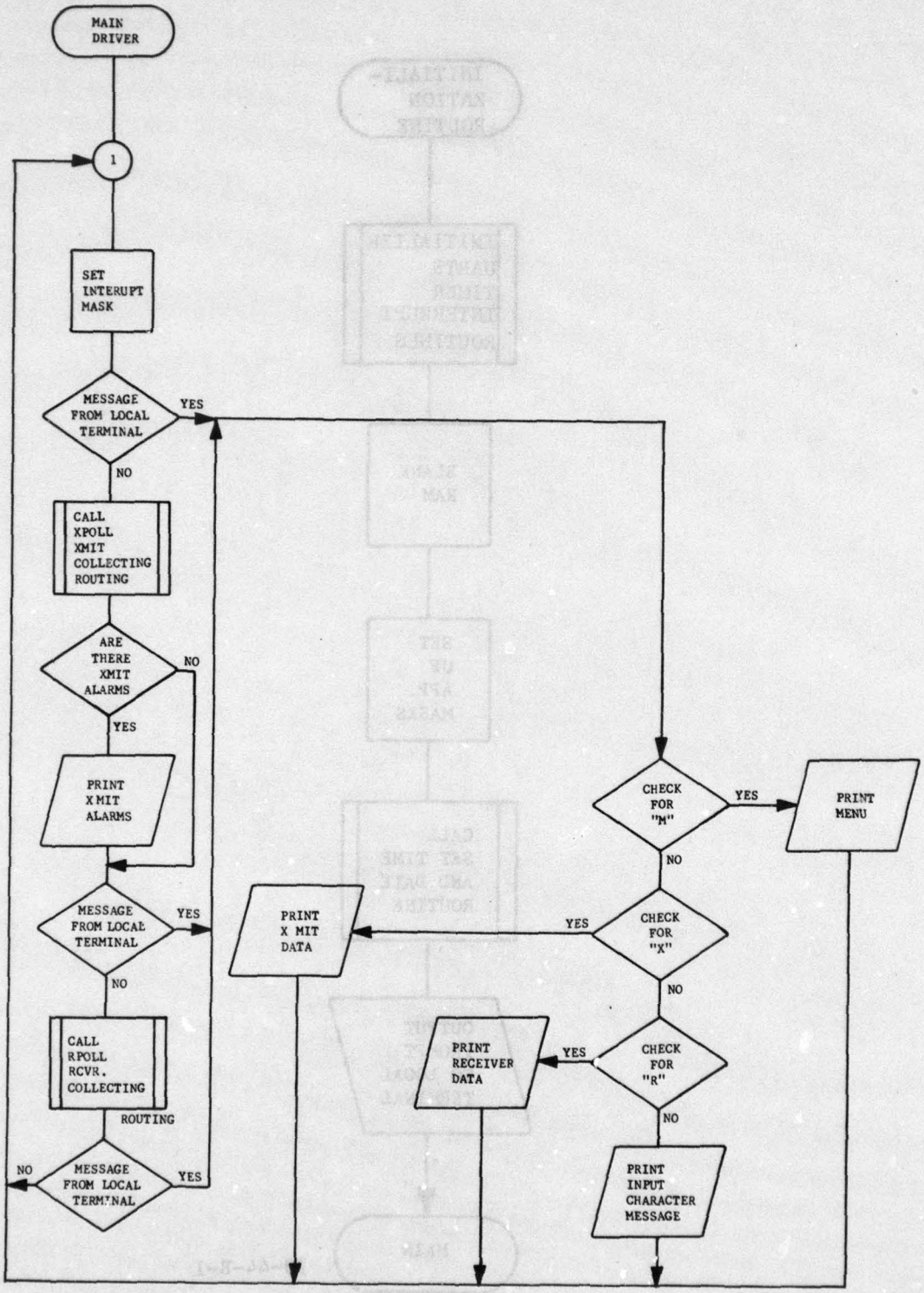
MAIN DRIVER
1
SET INTERUPT MASK
MESSAGE FROM LOCAL TERMINAL
YES
NO
CALL XPOLL XMIT COLLECTING ROUTING
ARE THERE XMIT ALARMS
NO
YES
PRINT XMIT ALARMS
MESSAGE FROM LOCAL TERMINAL
YES
NO
CALL RPOLL RCVR. COLLECTING
ROUTING
NO
MESSAGE FROM LOCAL TERMINAL
YES
CHECK FOR "M"
YES
PRINT MENU
NO
CHECK FOR "X"
YES
PRINT X MIT DATA
NO
CHECK FOR "R"
YES
PRINT RECEIVER DATA
NO
PRINT INPUT CHARACTER MESSAGE

79-44-B-2

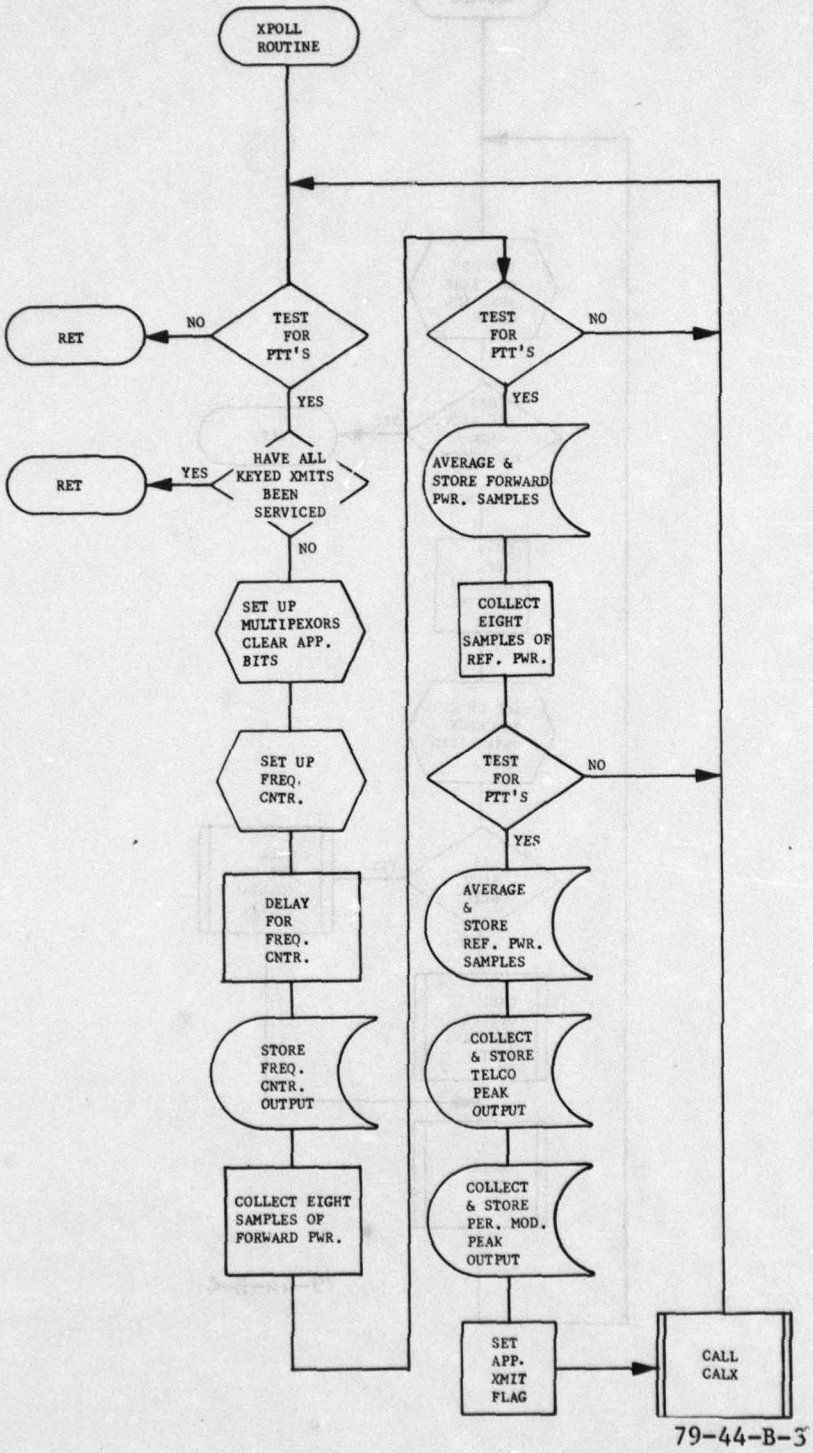
XPOLL ROUTINE
TEST FOR PTT'S
NO
RET
YES
HAVE ALL KEYED XMITS BEEN SERVICED
YES
RET
NO
SET UP MULTIPEXORS CLEAR APP. BITS
SET UP FREQ. CNTR.
DELAY FOR FREQ. CNTR.
STORE FREQ. CNTR. OUTPUT
COLLECT EIGHT SAMPLES OF FORWARD PWR.
TEST FOR PTT'S
NO
YES
AVERAGE & STORE FORWARD PWR. SAMPLES
COLLECT EIGHT SAMPLES OF REF. PWR.
TEST FOR PTT'S
NO
YES
AVERAGE & STORE REF. PWR. SAMPLES
COLLECT & STORE TELCO PEAK OUTPUT
COLLECT & STORE PER. MOD. PEAK OUTPUT
SET APP. XMIT FLAG
CALL CALX

79-44-B-3

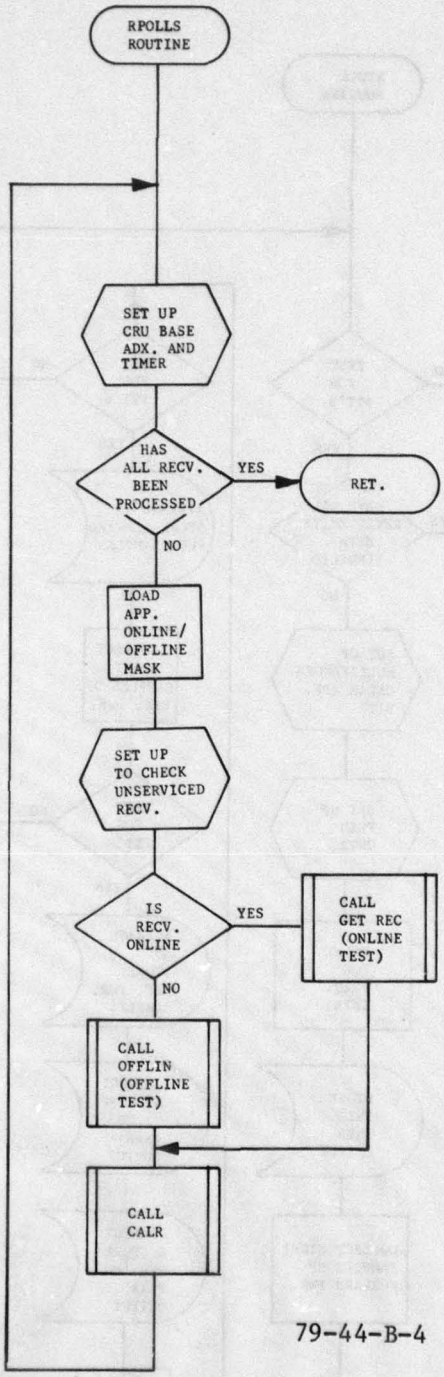
RPOLLS ROUTINE
SET UP CRU BASE ADX. AND TIMER
HAS ALL RECV. BEEN PROCESSED
YES
RET.
NO
LOAD APP. ONLINE/ OFFLINE MASK
SET UP TO CHECK UNSERVICED RECV.
IS RECV. ONLINE
YES
CALL GET REC (ONLINE TEST)
NO
CALL OFFLIN (OFFLINE TEST)
CALL CALR

79-44-B-4

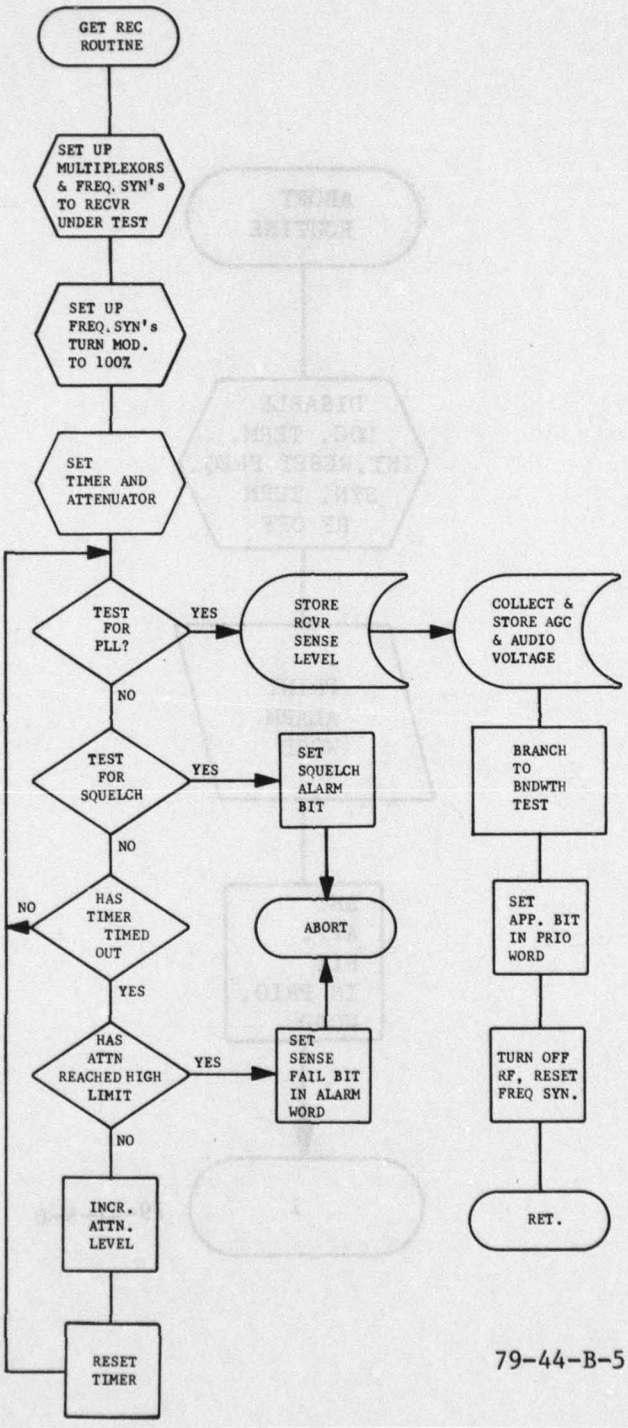
GET REC ROUTINE
SET UP MULTIPLEXORS & FREQ. SYN's TO RECVR UNDER TEST
SET UP FREQ. SYN's TURN MOD. TO 100%
SET TIMER AND ATTENUATOR
TEST FOR PLL?
YES
STORE RCVR SENSE LEVEL
COLLECT & STORE AGC & AUDIO VOLTAGE
NO
TEST FOR SQUELCH
YES
SET SQUELCH ALARM BIT
BRANCH TO BNDWTH TEST
NO
HAS TIMER TIMED OUT
NO
ABORT
SET APP. BIT IN PRIO WORD
YES
HAS ATTN REACHED HIGH LIMIT
YES
SET SENSE FAIL BIT IN ALARM WORD
TURN OFF RF, RESET FREQ SYN.
NO
INCR. ATTN. LEVEL
RET.
RESET TIMER

79-44-B-5

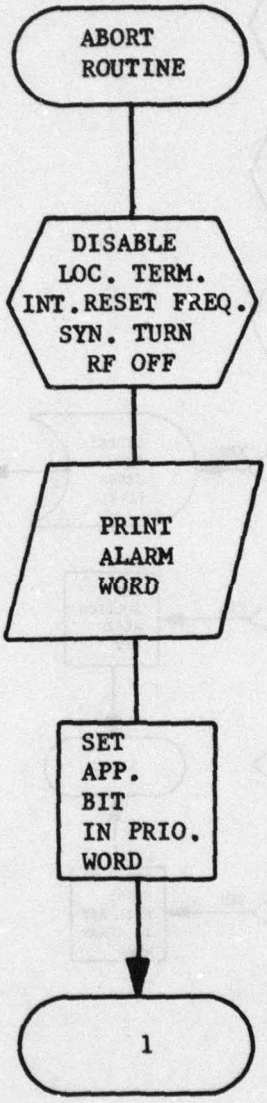
ABORT
ROUTINE
DISABLE
LOC. TERM.
INT. RESET FREQ.
SYN. TURN
RF OFF
PRINT
ALARM
WORD
SET
APP.
BIT
IN PRIO.
WORD
1

79-44-B-6

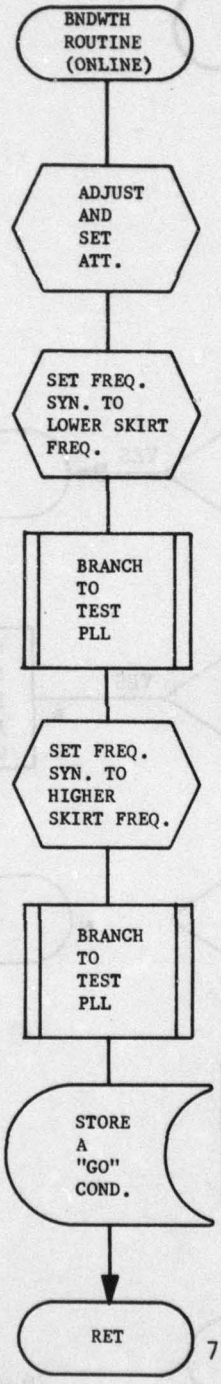
BNDWTH ROUTINE (ONLINE)
ADJUST AND SET ATT.
SET FREQ. SYN. TO LOWER SKIRT FREQ.
BRANCH TO TEST PLL
SET FREQ. SYN. TO HIGHER SKIRT FREQ.
BRANCH TO TEST PLL
STORE A "GO" COND.
RET

79-44-B-7

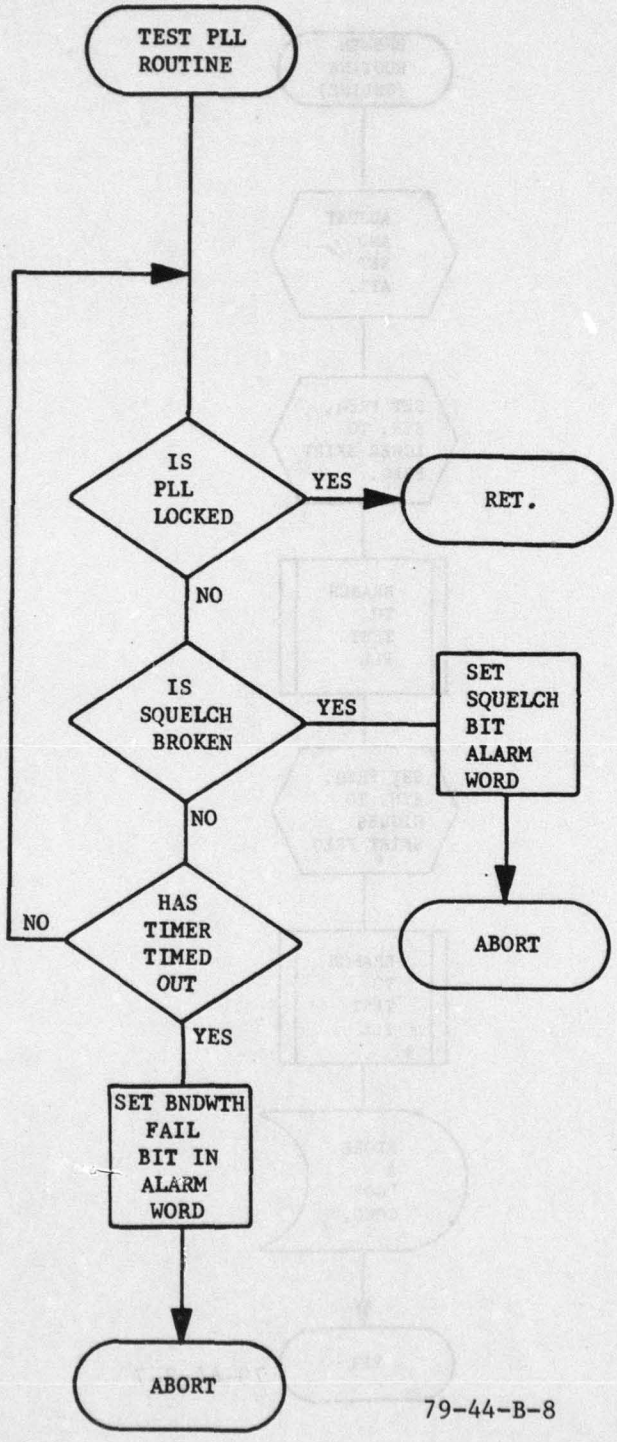
TEST PLL ROUTINE
IS PLL LOCKED
YES
RET.
NO
IS SQUELCH BROKEN
YES
SET SQUELCH BIT ALARM WORD
NO
HAS TIMER TIMED OUT
NO
ABORT
YES
SET BNDWTH FAIL BIT IN ALARM WORD
ABORT

79-44-B-8

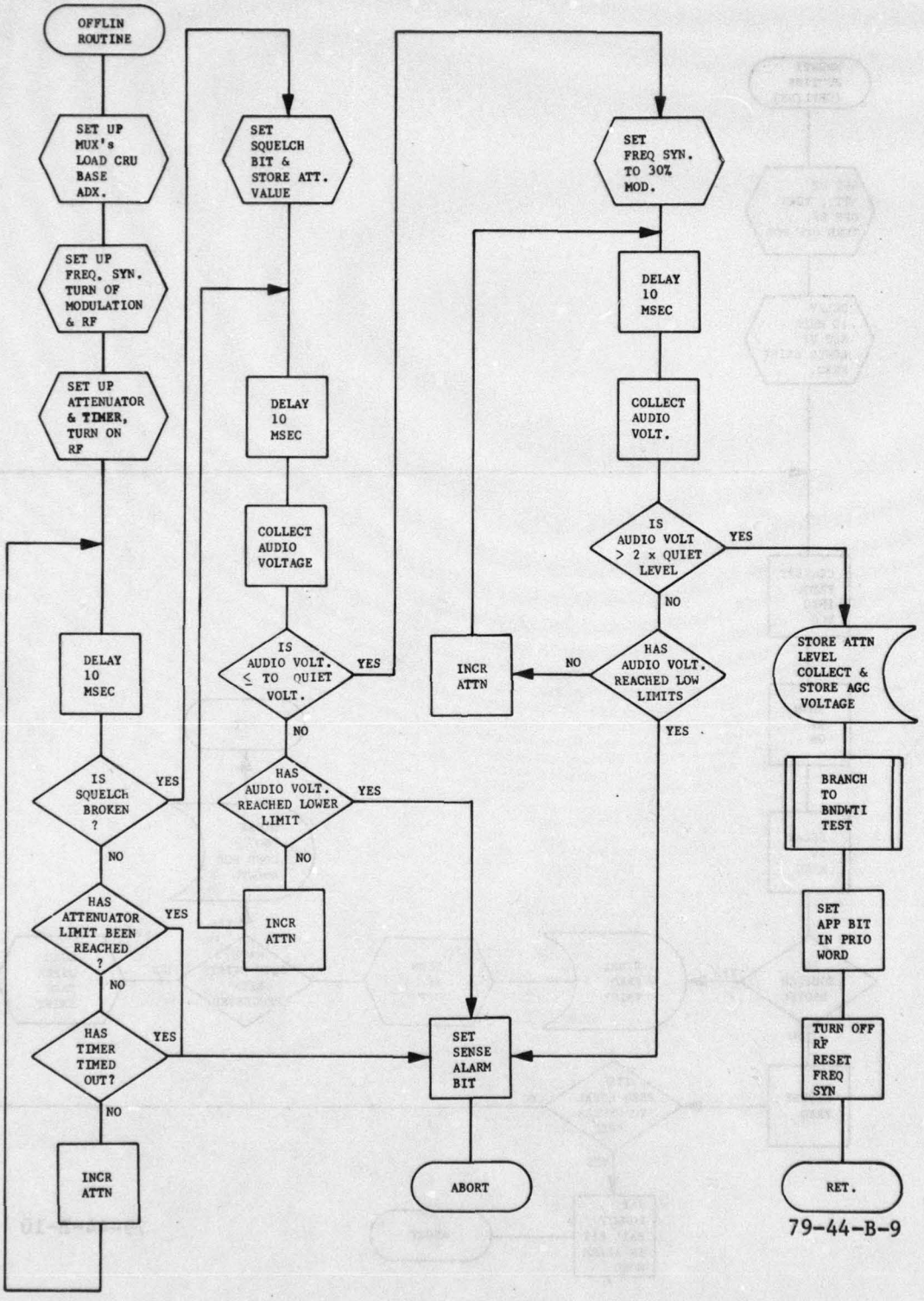
OFFLIN ROUTINE
SET UP MUX's LOAD CRU BASE ADX.
SET UP FREQ. SYN. TURN OF MODULATION & RF
SET UP ATTENUATOR & TIMER, TURN ON RF
DELAY 10 MSEC
IS SQUELCh BROKEN ?
YES
NO
HAS ATTENUATOR LIMIT BEEN REACHED ?
YES
NO
HAS TIMER TIMED OUT?
YES
NO
INCR ATTN
SET SQUELCH BIT & STORE ATT. VALUE
DELAY 10 MSEC
COLLECT AUDIO VOLTAGE
IS AUDIO VOLT. ≤ TO QUIET VOLT.
YES
NO
HAS AUDIO VOLT. REACHED LOWER LIMIT
YES
NO
INCR ATTN
SET FREQ SYN. TO 30% MOD.
DELAY 10 MSEC
COLLECT AUDIO VOLT.
IS AUDIO VOLT > 2 x QUIET LEVEL
YES
NO
HAS AUDIO VOLT. REACHED LOW LIMITS
NO
YES
INCR ATTN
STORE ATTN LEVEL COLLECT & STORE AGC VOLTAGE
BRANCH TO BNDWTI TEST
SET APP BIT IN PRIO WORD
TURN OFF RF RESET FREQ SYN
RET.
SET SENSE ALARM BIT
ABORT

79-44-B-9

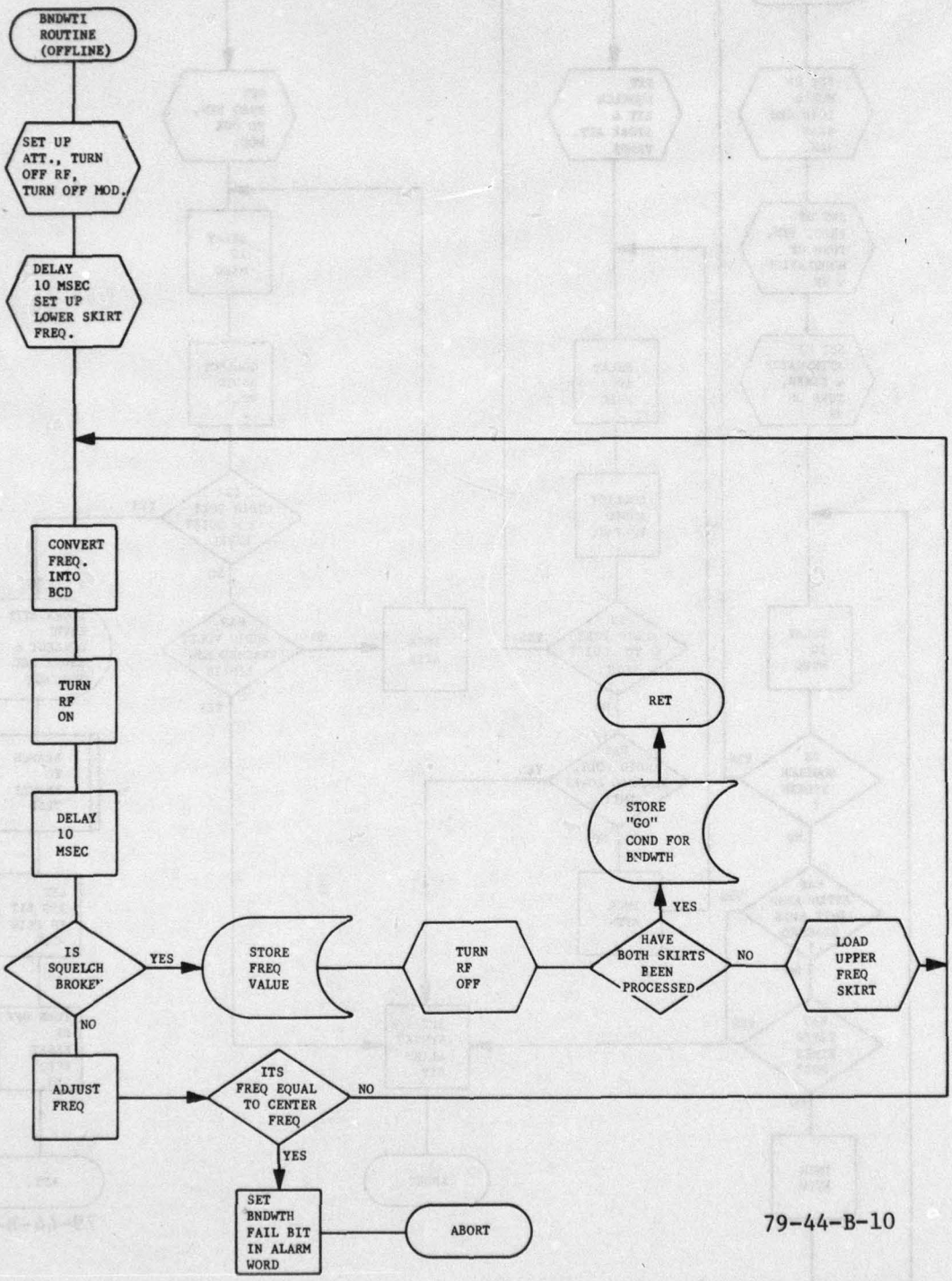
BNDWTI ROUTINE (OFFLINE)
SET UP ATT., TURN OFF RF, TURN OFF MOD.
DELAY 10 MSEC SET UP LOWER SKIRT FREQ.
CONVERT FREQ. INTO BCD
TURN RF ON
DELAY 10 MSEC
IS SQUELCH BROKE?
YES
STORE FREQ VALUE
TURN RF OFF
HAVE BOTH SKIRTS BEEN PROCESSED
NO
LOAD UPPER FREQ SKIRT
YES
STORE "GO" COND FOR BNDWTH
RET
NO
ADJUST FREQ
ITS FREQ EQUAL TO CENTER FREQ
NO
YES
SET BNDWTH FAIL BIT IN ALARM WORD
ABORT

79-44-B-10

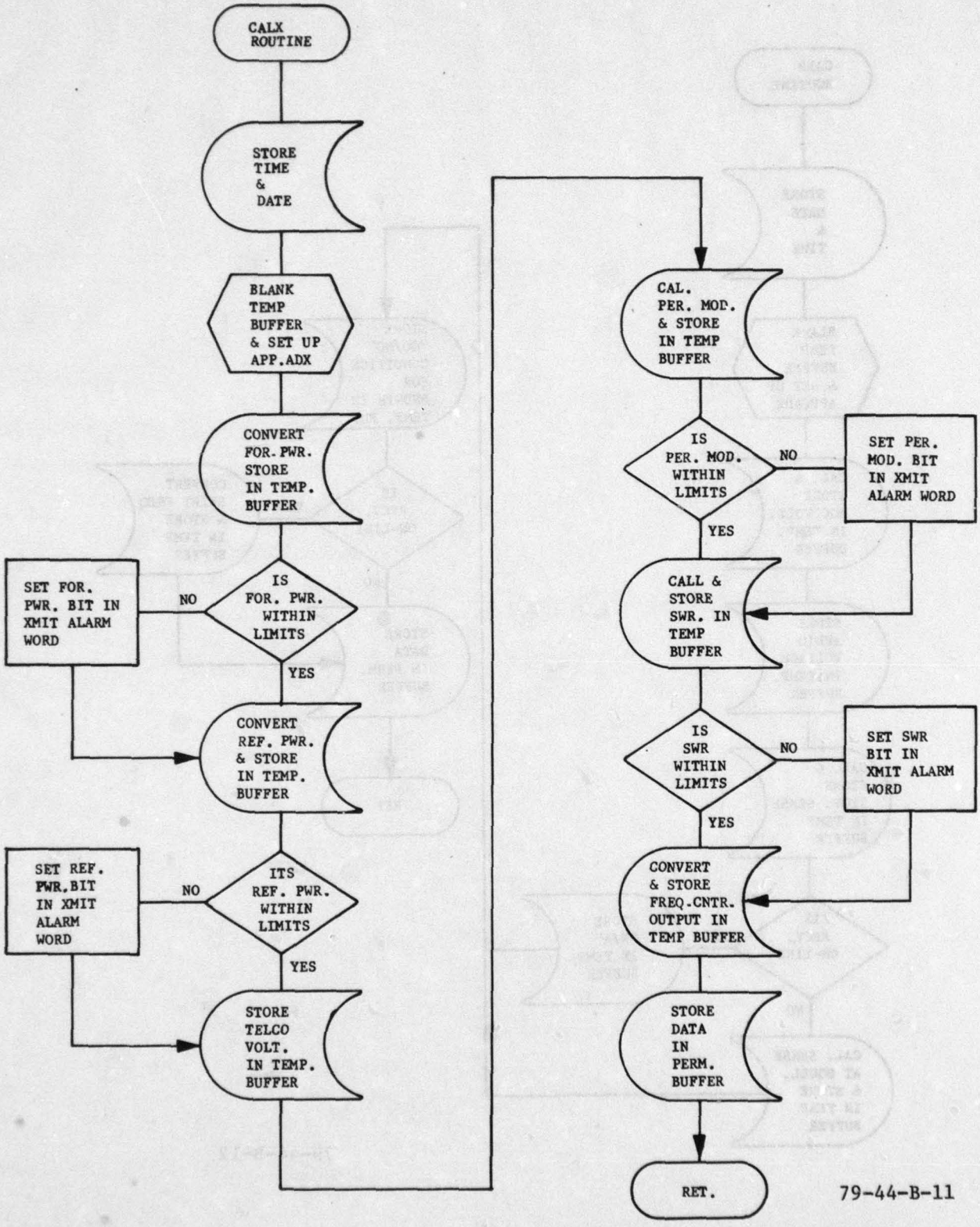
CALX ROUTINE
STORE TIME & DATE
BLANK TEMP BUFFER & SET UP APP.ADX
CONVERT FOR. PWR. STORE IN TEMP. BUFFER
IS FOR. PWR. WITHIN LIMITS
NO
SET FOR. PWR. BIT IN XMIT ALARM WORD
YES
CONVERT REF. PWR. & STORE IN TEMP. BUFFER
ITS REF. PWR. WITHIN LIMITS
NO
SET REF. PWR. BIT IN XMIT ALARM WORD
YES
STORE TELCO VOLT. IN TEMP. BUFFER
CAL. PER. MOD. & STORE IN TEMP BUFFER
IS PER. MOD. WITHIN LIMITS
NO
SET PER. MOD. BIT IN XMIT ALARM WORD
YES
CALL & STORE SWR. IN TEMP BUFFER
IS SWR WITHIN LIMITS
NO
SET SWR BIT IN XMIT ALARM WORD
YES
CONVERT & STORE FREQ. CNTR. OUTPUT IN TEMP BUFFER
STORE DATA IN PERM. BUFFER
RET.

79-44-B-11

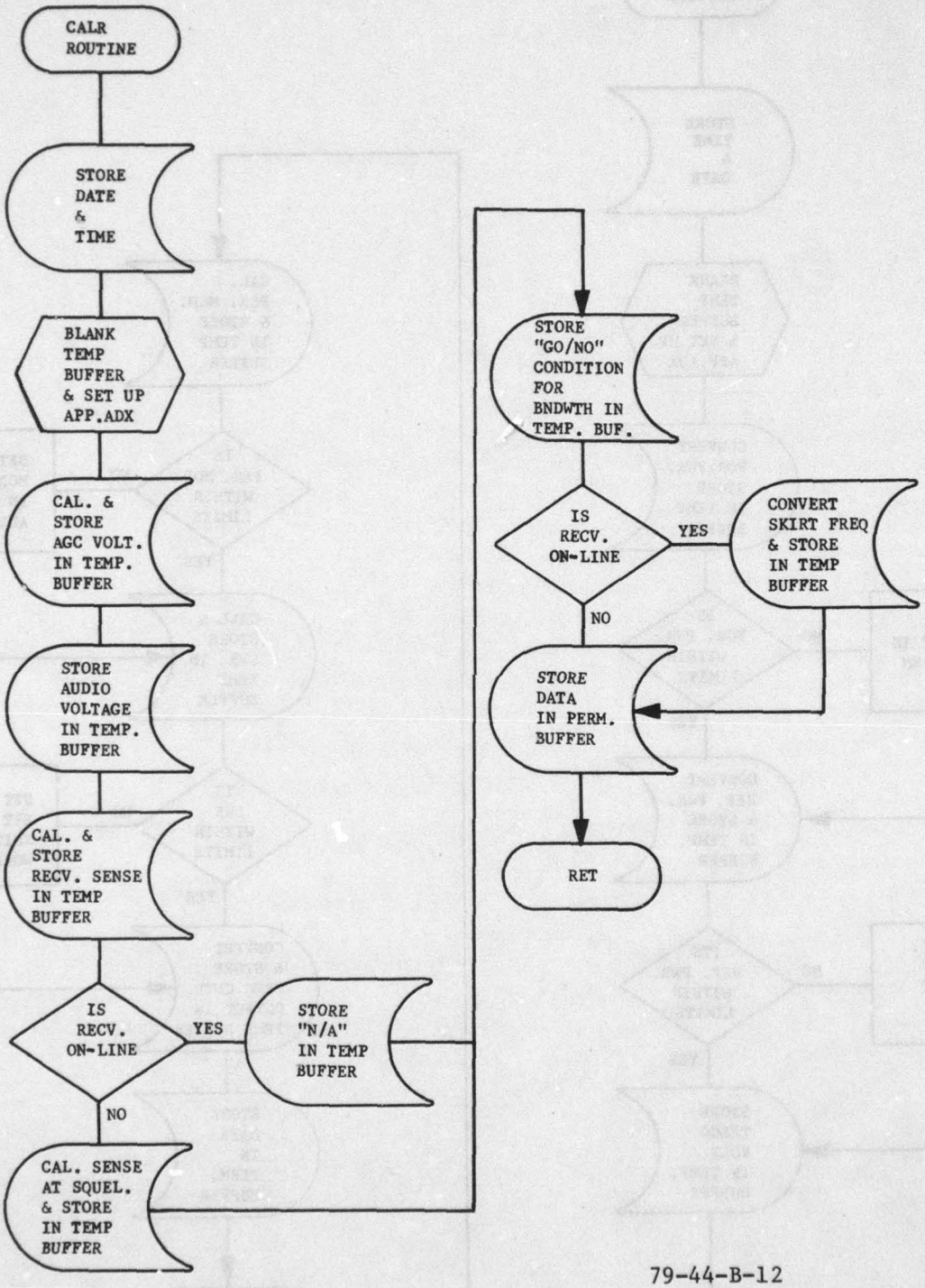
CALR ROUTINE
STORE DATE & TIME
BLANK TEMP BUFFER & SET UP APP.ADX
CAL. & STORE AGC VOLT. IN TEMP. BUFFER
STORE AUDIO VOLTAGE IN TEMP. BUFFER
CAL. & STORE RECV. SENSE IN TEMP BUFFER
IS RECV. ON-LINE
YES
STORE "N/A" IN TEMP BUFFER
NO
CAL. SENSE AT SQUEL. & STORE IN TEMP BUFFER
STORE "GO/NO" CONDITION FOR BNDWTH IN TEMP. BUF.
IS RECV. ON-LINE
YES
CONVERT SKIRT FREQ & STORE IN TEMP BUFFER
NO
STORE DATA IN PERM. BUFFER
RET

79-44-B-12

APPENDIX C

MONITOR PRINTOUTS

REMOTE MAINTENANCE MONITOR LOCAL TERMINAL PRINTOUT.

When power is turned on or the system is reset, the microprocessor prompts the RS-232 compatible local terminal (Silent 700) with a request "Enter Date (MO:DA:YR)" followed by "Enter Time (HR:MIN:SEC)."

The operator responds with two characters each for month, day, year and hours, minutes, and seconds. These characters must be numeric with no delineators. The microprocessor will then output a "?" (see example C-1).

```
ENTER DATE(MO:DA:YR): 07:27:79
ENTER TIME(HR:MIN:SEC): 10:32:55
?
```

EXAMPLE C-1

The operator then has a choice of information which the microprocessor can output. Transmitters are identified by X0, X1, X2, X3 which will output data for that particular transmitter, i.e.,

X0 = X/V/1 = transmitter 0/VHF/Channel 1
X1 = X/U/1 = transmitter 1/UHF/Channel 1
X2 = X/V/2 = transmitter 2/VHF/Channel 2
X3 = X/U/2 = transmitter 3/UHF/Channel 2

Receivers are identified by RO, R1, R2, R3

RO = R/V/1 = receiver 0/VHF/Channel 1
R1 = R/U/1 = receiver 1/UHF/Channel 1
R2 = R/V/2 = receiver 3/VHF/Channel 2
R3 = R/U/2 = receiver 3/UHF/Channel 2

Data from all transmitters can be retrieved by entering "X CR," see example C-2.

```
?X
HCY RCAG  DATE:07/27/79 TIME:10:35:20

DATA AS OF - DATE:07/27/79 TIME:10:34:47
  X/U/1   FOR.PWR. REF.PWR.   TELCO    PER MOD.     SWR      FRE.CNT.
            8.7      .00      1.997       100     1.00:1 118.1500
DATA AS OF - DATE:07/27/79 TIME:10:34:47
  X/U/1   FOR.PWR. REF.PWR.   TELCO    PER MOD.     SWR      FRE.CNT.
           10.6      .00      1.553        85     1.00:1 279.5016
DATA AS OF - DATE:07/27/79 TIME:10:34:56
  X/U/2   FOR.PWR. REF.PWR.   TELCO    PER MOD.     SWR      FRE.CNT.
           10.5      .00      1.225        82     1.00:1 118.1446
DATA AS OF - DATE:07/27/79 TIME:10:34:55
  X/U/2   FOR.PWR. REF.PWR.   TELCO    PER MOD.     SWR      FRE.CNT.
           10.5      .00      1.506        80     1.00:1 275.1996

?
```

EXAMPLE C-2

The date/time tag which first appears on the printout is the current date/time. The date/time tag printed with each transmitter data is the date/time of the last data acquired by the monitor system for that particular transmitter. Particular transmitter data can be separately called up by entering:

"XO CR" through "X3 CR." Refer to example C-3.

```
?X0
ACY RCAG  DATE:07/27/79 TIME:10:36:39

DATA AS OF - DATE:07/27/79 TIME:10:34:47
  X/U/1   FOR.PWR. REF.PWR.   TELCO   PER MOD.     SWR      FRE.CNT.
             8.7      .00     1.997      100     1.00:1 118.1500

?X1
ACY RCAG  DATE:07/27/79 TIME:10:37:01

DATA AS OF - DATE:07/27/79 TIME:10:34:47
  X/U/1   FOR.PWR. REF.PWR.   TELCO   PER MOD.     SWR      FRE.CNT.
            10.6      .00     1.553       85     1.00:1 279.5016

?X2
ACY RCAG  DATE:07/27/79 TIME:10:37:22

DATA AS OF - DATE:07/27/79 TIME:10:34:56
  X/U/2   FOR.PWR. REF.PWR.   TELCO   PER MOD.     SWR      FRE.CNT.
            10.5      .00     1.225       82     1.00:1 118.1446

?X3
ACY RCAG  DATE:07/27/79 TIME:10:37:44

DATA AS OF - DATE:07/27/79 TIME:10:34:55
  X/U/2   FOR.PWR. REF.PWR.   TELCO   PER MOD.     SWR      FRE.CNT.
            10.5      .00     1.506       80     1.00:1 275.1996
```

EXAMPLE C-3

```
?
```

There is one further output associated with transmitters, which is alarms. Each transmitter has four possible alarms which are forward power, reflected power, percent modulation, and Standing Wave Ratio (SWR).

When the microprocessor detects an alarm condition it sets the appropriate bit in the output alarm word. The first hexadecimal character contains alarms for X/V/1, the second for X/U/1, the third for X/V/2, and the fourth for X/U/2, i.e.,

Transmitter Alarm: $(F \quad F \quad F \quad F)_{16}$

X/V/1 X/U/1 X/V/2 X/U/2

The Alarm Bits Are: $(F)_{16}$

$(1 \quad 1 \quad 1 \quad 1)_2$

Foward Power | REFL Power | Percent MOD | SWR

The alarms in example C-4 were caused by a high reflected power which in turn caused an SWR alarm on the VHF transmitters.

```
 DATE:07/27/79 TIME:10:40:00
XMIT ALARM - 5000
?
 DATE:07/27/79 TIME:10:40:11
XMIT ALARM - 0050
```

EXAMPLE C-4

The same situation occuring on the UHF transmitters would appear as in example C-5.

```
 DATE:07/27/79 TIME:10:44:43
XMIT ALARM - 0500
?
 DATE:07/27/79 TIME:10:44:52
XMIT ALARM - 0005
?
```

EXAMPLE C-5.

Further examination of the data after these alarms define the reason for the alarms (see examples C-6 and C-7, respectively).

```
 X
ACY RCAG  DATE:07/27/79 TIME:10:51:27

DATA AS OF - DATE:07/27/79 TIME:10:50:36
  X/V/1   FOR.PWR. REF.PWR.   TELCO    PER MOD.     SWR      FRE.CNT.
            8.8      3.09     1.875      113      3.87:1 118.1500
DATA AS OF - DATE:07/27/79 TIME:10:50:37
  X/U/1   FOR.PWR. REF.PWR.   TELCO    PER MOD.     SWR      FRE.CNT.
           10.6       .00     1.091       86      1.00:1 279.5014
DATA AS OF - DATE:07/27/79 TIME:10:50:44
  X/U/2   FOR.PWR. REF.PWR.   TELCO    PER MOD.     SWR      FRE.CNT.
            9.7      3.20     6.622       77      3.65:1 118.1446
DATA AS OF - DATE:07/27/79 TIME:10:50:45
  X/U/2   FOR.PWR. REF.PWR.   TELCO    PER MOD.     SWR      FRE.CNT.
           10.4       .00     1.186       80      1.00:1 275.1996
```

EXAMPLE C-6.

```
X
ACY RCAG  DATE:07/27/79 TIME:10:53:04

DATA AS OF - DATE:07/27/79 TIME:10:52:36
  X/U/1    FOR.PWR. REF.PWR.   TELCO    PER MOD.     SWR      FRE.CNT.
              8.7      .00     1.177       96      1.00:1  118.1500
DATA AS OF - DATE:07/27/79 TIME:10:52:36
  X/U/1    FOR.PWR. REF.PWR.   TELCO    PER MOD.     SWR      FRE.CNT.
              9.1     3.91     1.665       81      4.71:1  279.4969
DATA AS OF - DATE:07/27/79 TIME:10:52:47
  X/U/2    FOR.PWR. REF.PWR.   TELCO    PER MOD.     SWR      FRE.CNT.
              9.2      .00     9.999       94      1.00:1  118.1444
DATA AS OF - DATE:07/27/79 TIME:10:52:48
  X/U/2    FOR.PWR. REF.PWR.   TELCO    PER MOD.     SWR      FRE.CNT.
              8.5     3.27     1.201       69      4.26:1  275.1996
```

EXAMPLE C-7

Receiver data printouts are initiated in the same fashion as the transmitter printouts. Where "R/CR" causes all the receiver data available to be printed. In the NAFEC test bed only the VHF receivers were tested, therefore, only R/V/1 and R/V/2 portions of the printout have data (see example C-8).

```
?R
ACY RCAG  DATE:07/27/79 TIME:10:54:22

DATA AS OF - DATE:07/27/79 TIME:10:54:02
 R/V/1     AGC VOLT  AUDIO    SENSE.  SQUELCH  BAND WTH  L.FREQ  H.FREQ.
             1.88      .74      124      N/A      GO
DATA AS OF - DATE:00/00/00 TIME:00:00:00
 R/V/1     AGC VOLT  AUDIO    SENSE.  SQUELCH  BAND WTH  L.FREQ  H.FREQ.

DATA AS OF - DATE:07/27/79 TIME:10:54:05
 R/V/2     AGC VOLT  AUDIO    SENSE.  SQUELCH  BAND WTH  L.FREQ  H.FREQ.
             6.14     2.64      105      106      GO     118.131  118.169
DATA AS OF - DATE:00/00/00 TIME:00:00:00
 R/V/2     AGC VOLT  AUDIO    SENSE.  SQUELCH  BAND WTH  L.FREQ  H.FREQ.
```

EXAMPLE C-8

The receiver data can be output one at a time by entering "RO/CR," or "R2/CR", etc. (see example C-9).

```
?R0
ACY RCAG  DATE:07/27/79 TIME:10:56:42

DATA AS OF - DATE:07/27/79 TIME:10:56:34
 R/V/1     AGC VOLT  AUDIO     SENSE.   SQUELCH   BAND WTH   L.FREQ   H.FREQ.
             1.88      .00       125       N/A      GO

?R2
ACY RCAG  DATE:07/27/79 TIME:10:57:02

DATA AS OF - DATE:07/27/79 TIME:10:56:41
 R/V/2     AGC VOLT  AUDIO     SENSE.   SQUELCH   BAND WTH   L.FREQ   H.FREQ.
             6.10      2.31      105       106      GO        118.131  118.169
```

EXAMPLE C-9

As with the transmitter alarms, the receiver data follows the same pattern. The first hexadecimal character contains alarms for R/V/1, the second for R/U/1, the third for R/V/2 and the fourth for R/U/2, i.e.,

Receiver Alarm:

$$\underset{\text{R/V/1}}{(F}\quad \underset{\text{R/U/1}}{F}\quad \underset{\text{R/V/2}}{F}\quad \underset{\text{R/U/2}}{F)}_{16}$$

The Alarm Bits Are:

$$\overbrace{\underset{\text{Sensitivity}}{(1}\quad \underset{\text{N/U}}{1}\quad \underset{\text{Bandwidth}}{1}\quad \underset{\text{Squelch}}{1)}_{2}}^{(F)_{16}}$$

See example C-10 for examples of the receiver alarm printout.

```
 DATE:07/27/79 TIME:10:58:47
RECV ALARM - 1000
?


?
 DATE:07/27/79 TIME:10:59:57
RECV ALARM - 8000
?
 DATE:07/27/79 TIME:11:01:02
RECV ALARM - 0080
?
 DATE:07/27/79 TIME:11:01:37
RECV ALARM - 0010
?
```

EXAMPLE C-10

The microprocessor also responds to input character "M CR" with a menu of input characters (see example C-11).

```
?M
ACY RCAG  DATE:07/27/79 TIME:11:02:32

ENTER ONE OF THE FOLLOWING CODES
 M - MENU
 X - RCAG XMIT DATA
 R - RCAG RECV. DATA
```

EXAMPLE C-11

In addition, the microprocessor will respond to an "ESC" key by aborting whatever it is doing and starting over in the Main Driver Routine. Depressing any other character will produce a printout stating "Bad CHAR or data."

APPENDIX D

MATHEMATICAL EQUATIONS USED FOR PARAMETERS

TRANSMITTER PARAMETERS.

The requirement to report forward and reflected power in watts dictated the use of calibration data for the forward and reflected power sensors. It was found that if the data were split into two groups, the final product of two equations would realistically describe the calibration data.

If the forward power voltage reading was less than 0.19 volts, the voltage was assumed to be zero. If the forward power voltage reading was between 0.19 volts and 4.190 volts, equation D-1 was used, otherwise equation D-2 was used.

$$W = (2.2225)*V+(1.99065) \qquad \text{(D-1)}$$

where:
W = value in watts
V = value in volts

$$W = V/(0.739537) + (-0.05490)*V \qquad \text{(D-2)}$$

Equation D-3 was used to convert reflected power from volts to watts.

$$W = (-0.19023) + (0.54155)*V \qquad \text{(D-3)}$$

The above equations were produced by regression techniques utilizing calibration data. (Figures E-1 and E-2).

The percent modulation calculation is developed in figure A-7 of reference 1 and shown in equation D-4.

$$\text{Per. Mod.} = \frac{V_{PK}}{V_{FP}} * 100\% \qquad \text{(D-4)}$$

where:
V_{FP} = forward power in volts
V_{PK} = voltage from percent modulation peak detector

SWR is described on page 8 of reference 1. The calulation of SWR is:

$$SWR = \frac{1 + \sqrt{\frac{P_{REV}}{P_{FWD}}}}{1 - \sqrt{\frac{P_{REV}}{P_{FWD}}}} \qquad \text{(D-5)}$$

where:

P_{REV} = reflected power
P_{FWD} = forward power

The transmitter frequency count is converted directly from binary to ASCII characters. TELCO voltage is translated into ASCII characters and reported.

RECEIVER PARAMETERS.

AGC voltage is multiplied by a factor of 2.5 due to the AGC voltage circuitry. Audio voltage is converted directly to ASCII characters. The value of the attenuator is reported as receiver sensitivity. During the on-line test, this value is the level at which the PLL locked. The attenuator level for the off-line test is taken when the receiver reaches 10 dB (S+N)/N ratio. In either case, the value of the attenuator is converted to a dB level using equation D-6.

$$dB = (0.32923)*A + 57.153 \qquad \text{(D-6)}$$

where:

A = value of attenuator

Squelch is reported in the off-line test as the attenuation level when squelch broke. Equation D-6 is also used to convert the squelch value to a dB level.

The bandwidth test is reported as a "go/no go" condition in the on-line test. The off-line bandwidth test reports the lower and upper skirt frequencies.

APPENDIX E

DESCRIPTION OF SENSORS

This section describes the monitor sensor hardware, including the (1) directional power detector, (2) RF signal generator, (3) frequency counter, and (4) microcomputer.

DIRECTIONAL POWER DETECTOR (DPD).

A DPD (a directional coupler and RF detector built into one package) was used to measure forward carrier power, reflected carrier power, and carrier modulation.

RF power propagating along an antenna feedline is sampled by the directional coupler, and a small portion (-45 dBc) is detected. The detector output voltage is either a d.c. level when the carrier is unmodulated or a d.c. level with an audio component superimposed if the carrier is modulated.

The DPD used was purchased from Coaxial Dynamics Incorporated (CDI). This directional coupler has two RF detectors built into one package, aligned in opposite directions to simultaneously sample incident and reflected antenna feedline RF power.

Desirable features of a DPD include the following:

Not VSWR Dependent	enabling accurate measurements
Static Surge Protected	protected against atmospheric static buildup, and nondirect lightning strikes
Precision	low variation in output from DPD to DPD
Passive	does not require external or internal power sources
Low Insertion Loss & SWR	will not cause interference to normal transmitter operation
High Directivity	provides decreased chance for error

The manufacturers specifications for the DPD are listed in table E-1.

TABLE E-1. MANUFACTURER SPECIFICATIONS OF THE DPD

(10 Watt Exciters)

Fwd Power	12 watts max.
Rev Power	3 watts max.
Calibration	1 volt at 12 watts fwd 0.4 volt at 3 watts rev.
SWR	1.1:1 max.
Frequency Range:	
VHF	116 - 152 mhz
UHF	225 - 400 mhz
Directivity	27 dB
Flatness	2% variation (or less) in detector output across VHF frequency band

According to the manufacturer, RF power is sampled as opposed to RF voltage or RF current. Physical construction of the RF coupler is such that RF voltage is capacitively coupled to the detector and RF current is inductively coupled. The interaction of the two components at the detector produces a d.c. output voltage proportional to feedline power (figures E-1 and E-2).

The term "e linear" is used by Coaxial Dynamics Inc. to describe the relationship between antenna line RF and the DPD outputs. It means that the DPD output voltage changes linearly with respect to antenna transmission line voltage (i.e., if the RF line voltage doubles, the DPD detector output voltage also doubles). E linearity thus simplifies percent modulation measurements. Expressed mathematically:

$$\% \text{ Mod} = \frac{V_{PK}}{V_{DC}} - 1$$

The fact that the DPD is a linear device does not imply that it senses RF voltage only. A component of RF voltage derived from antenna line voltage is combined with a component of RF voltage derived from antenna line current; this combination is then used to excite the detector producing the DPD output.

The DPD calibration data for antenna line power (incident and reflected) versus detector output voltage appears in figures E-1 and E-2 and were obtained using the test setup in figure E-3.

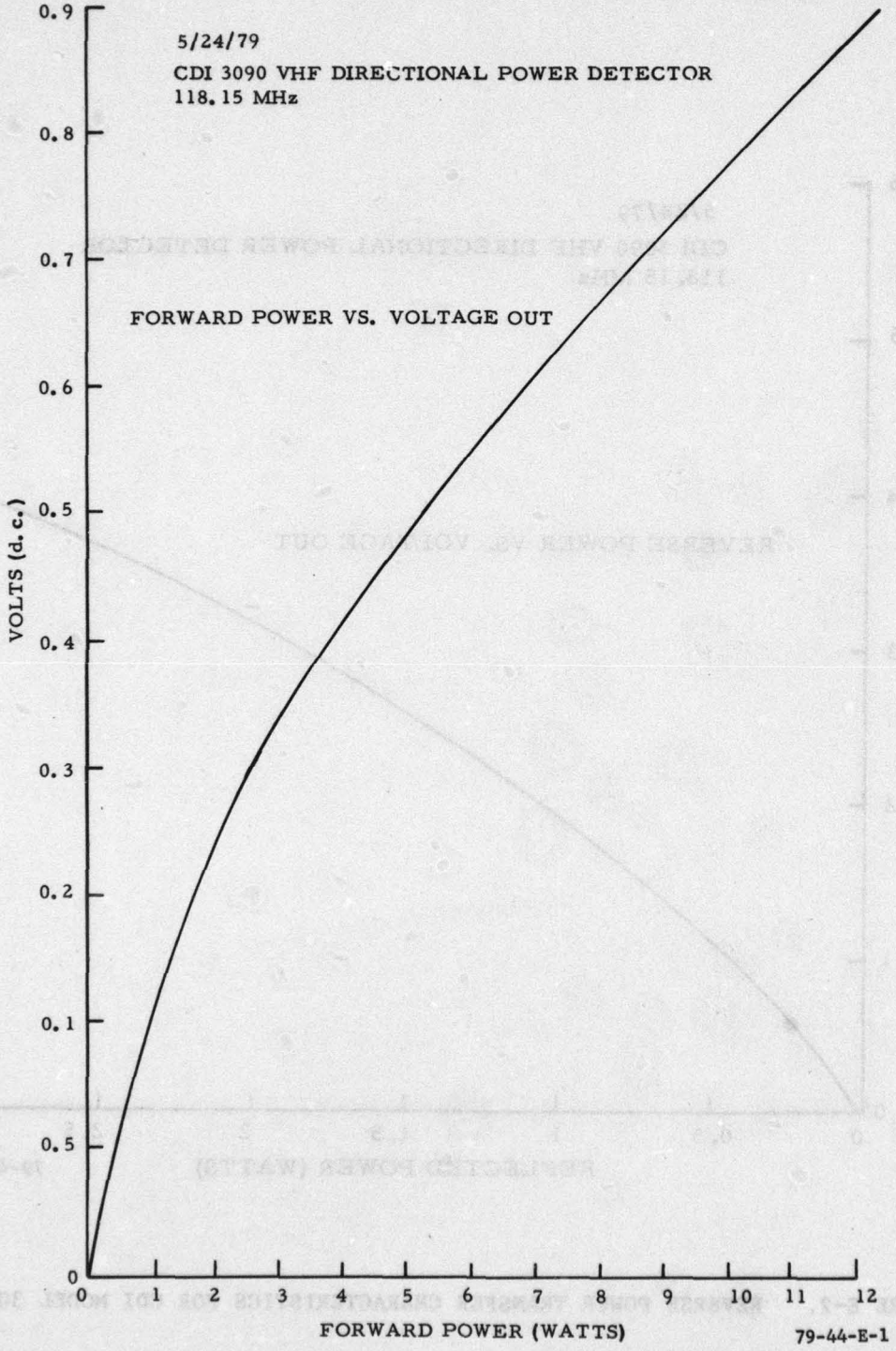

FIGURE E-1. FORWARD POWER TRANSFER CHARACTERISTICS FOR CDI MODEL 3090 DPD

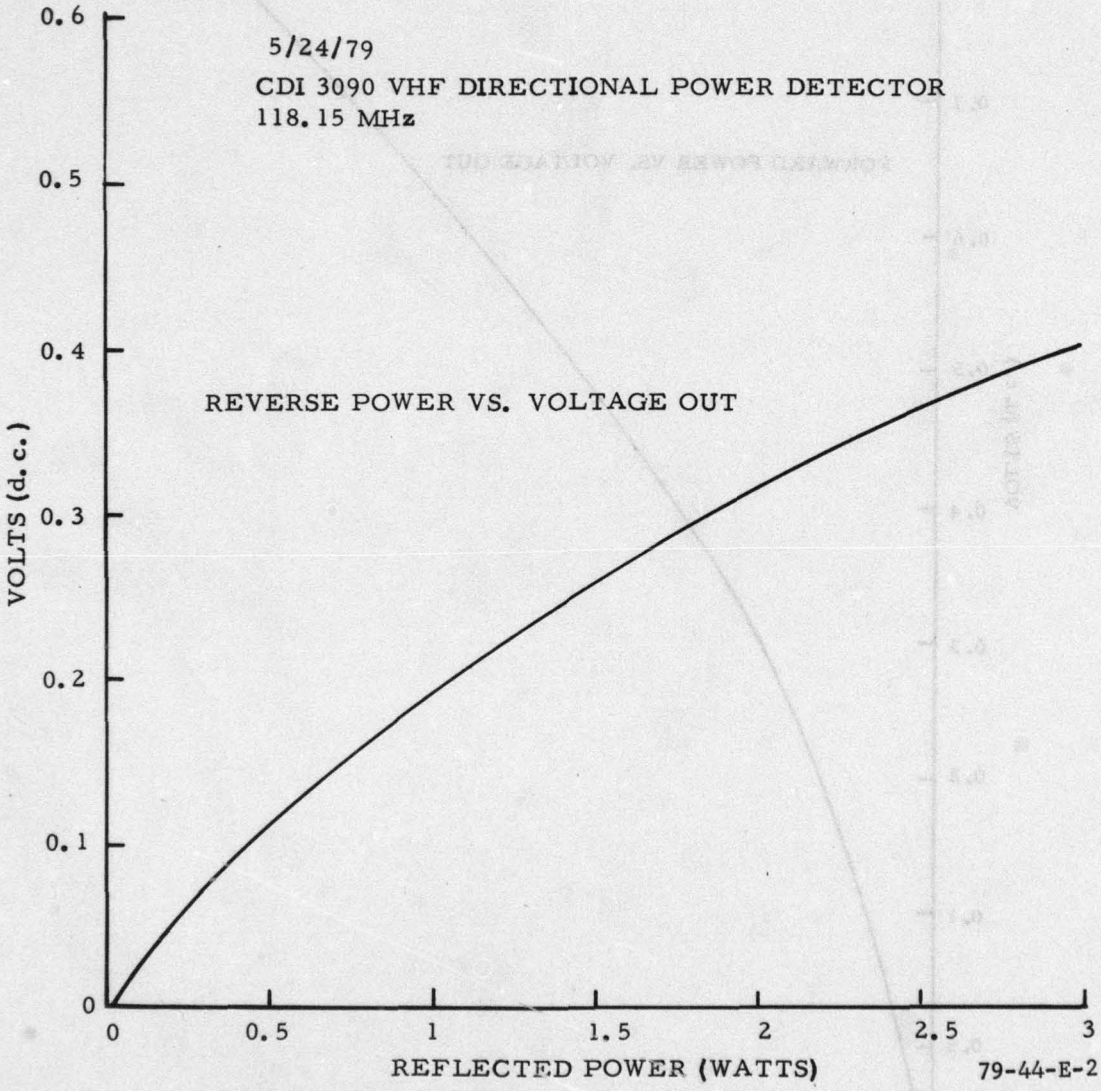

FIGURE E-2. REVERSE POWER TRANSFER CHARACTERISTICS FOR CDI MODEL 3090 DPD

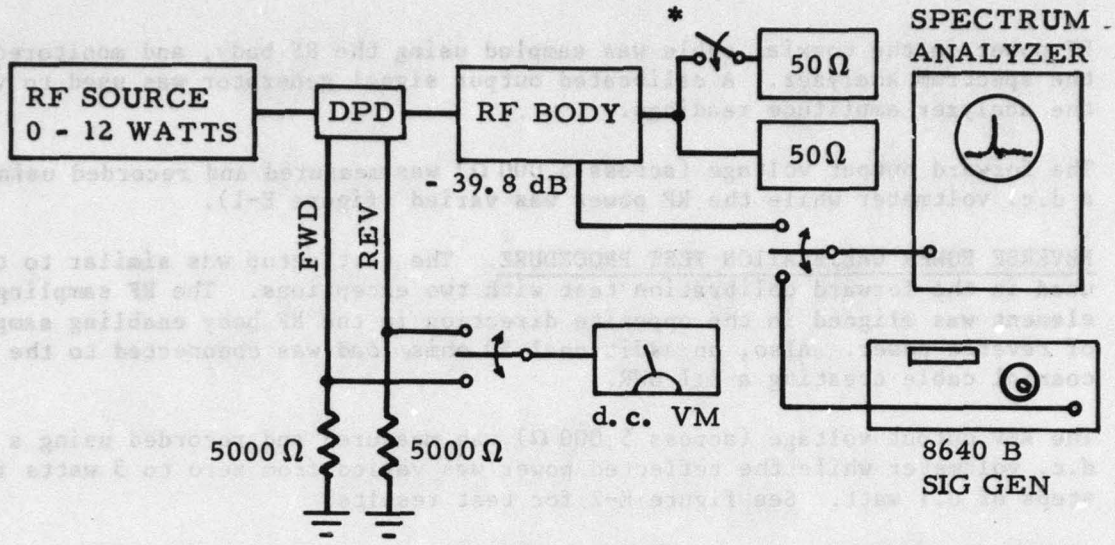

FIGURE E-3. DPD RF POWER CALIBRATION TEST SETUP

A major contributing factor to errors when measuring power using directional couplers is the directivity (the ability of the coupler to discriminate between the forward and reflected waves, i.e., separation). The lower the directivity, the greater the error and vice versa. Table E-2 shows the expected error of any coupler due to directivity for an SWR of 2:1.

TABLE E-2. DIRECTIVITY ERROR

Directivity (dB)	Foward Power (% Error)	SWR (% Error)
20	6.6	26.0
25	3.7	14.25
27	3.0	10.9
30	2.1	7.5
35	1.2	5.0
40	0.7	2.5

FORWARD POWER CALIBRATION TEST PROCEDURE. An adjustable RF source was connected to a 50 Ω load using a 1 meter length of RG-8/u coaxial cable. Also connected in the RF path was the DPD under test and an RF body. The body had a directional RF sampling element having a coupling of -39.8 dB which was used to sample forward power.

RF power in the coaxial cable was sampled using the RF body, and monitored on the spectrum analyzer. A calibrated output signal generator was used to verify the analyzer amplitude readings.

The forward output voltage (across 5,000 Ω) was measured and recorded using a d.c. voltmeter while the RF power was varied (figure E-1).

REVERSE POWER CALIBRATION TEST PROCEDURE. The test setup was similar to that used in the forward calibration test with two exceptions. The RF sampling element was aligned in the opposite direction in the RF body enabling sampling of reverse power. Also, an additional 50 ohms load was connnected to the coaxial cable creating a 2:1 SWR.

The REV output voltage (across 5,000 Ω) was measured and recorded using a d.c. voltmeter while the reflected power was varied from zero to 3 watts in steps of 0.1 watt. See figure E-2 for test results.

CARRIER MODULATION. The calibration data for carrier modulation versus detector audio output appears in figure E-4 and was obtained using the test setup in figure E-5. The test setup was similar to the forward calibration test with the following two exceptions; the RF source was fixed at 10 watts, and the spectrum analyzer was replaced with an oscilloscope.

RF power in the coaxial cable was sampled using the RF body and displayed on the oscilloscope. The oscilloscope controls were adjusted so that percentage modulation of the RF could be measured.

The RMS a.c. voltage from the forward output (across 5,000 Ω) was measured using an a.c. voltmeter, and recorded while the carrier modulation was varied from 0 to 100 percent (see figure E-4 for test results).

A total of 10 DPD's (5 UHF and 5 VHF) were tested. All units were found to track very well and variation between units was minimal.

INTERMODULATION DISTORTION. Intermodulation distortion is a problem in that signals caused by two transmitters on closely spaced frequencies operating simutaneously cause interference on a third frequency. A test was conducted to determine the level of intermodulation products caused by the CDI DPD. The test setup in figure E-6 was used.

Two transmitters, 118.150 MHz and 123.200 MHz, were connected to antennas separated by a distance such that the signal from one transmitter was attenuated 20 dB when measured at the antenna terminals of the other.

Signal measurements were made using a Tektronix 7904 mainframe with a 7L13 spectrum analyzer plug-in unit. A Texscan tunable bandpass filter (4 pole)

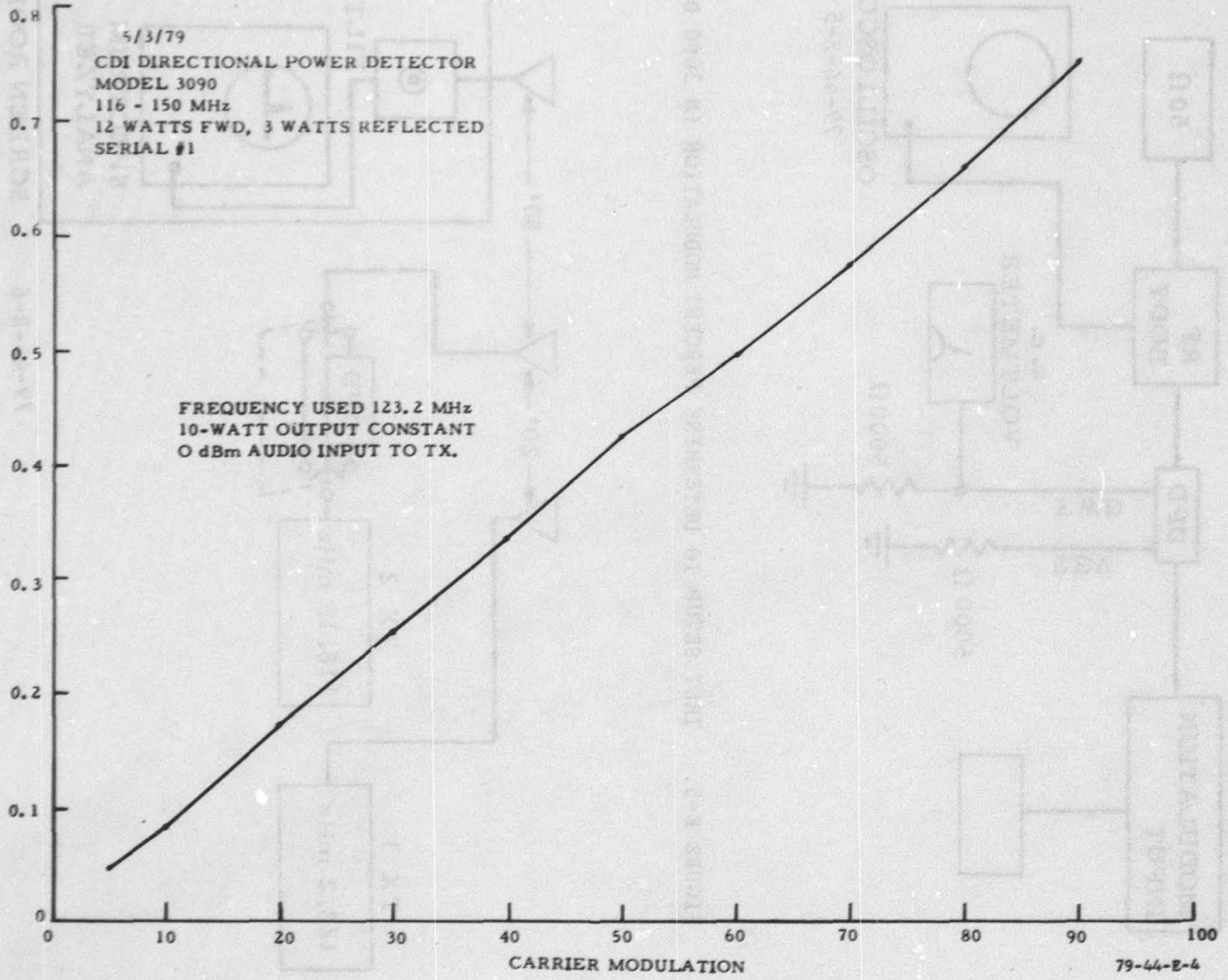

FIGURE E-4. PERCENT MODULATION VERSUS AUDIO OUTPUT FOR MODEL 3090

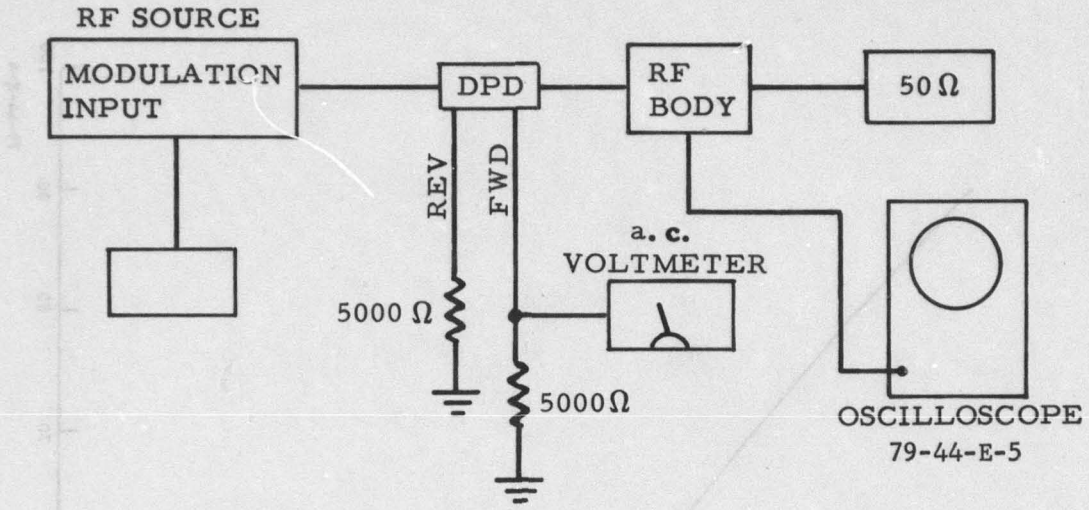

FIGURE E-5. TEST SETUP TO DETERMINE PERCENT MODULATION IN 3090 DPD

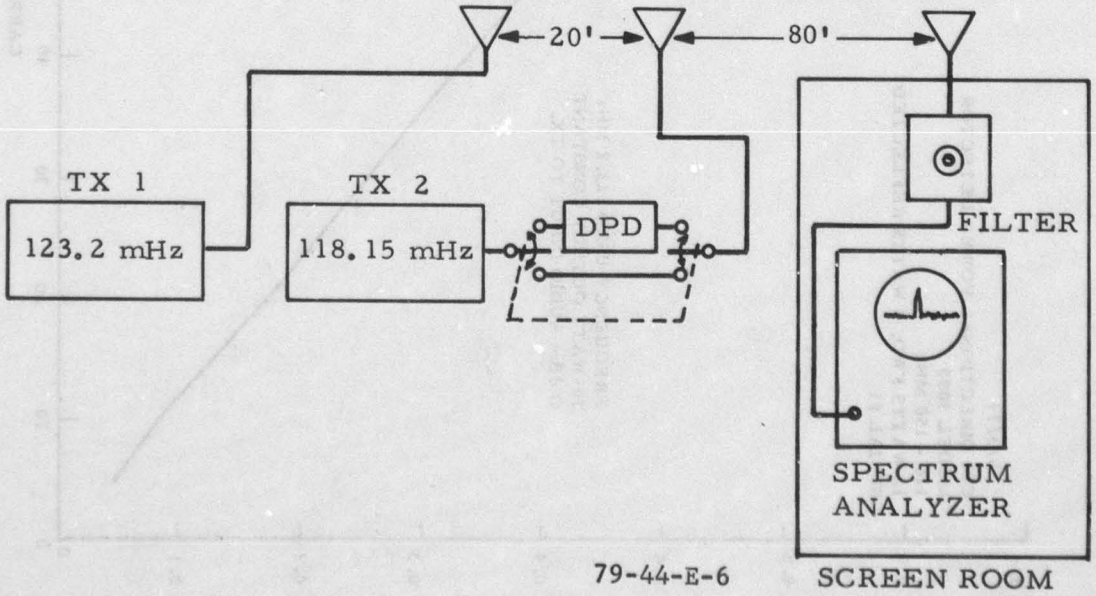

FIGURE E-6. TEST SETUP TO DETERMINE INTERMODULATION PRODUCTS GENERATED IN THE 3090 DPD

was connected to the input of the spectrum analyzer to prevent intermodulation distortion developing in the front end of the analyzer. RF signals were received using a coaxial antenna mounted approximately 80 feet away from the transmitting antennas.

Both transmitters were keyed simultaneously, and with a DPD installed on one (118.150 MHz), the intermodulation products were approximately -40 dBm, or 20 dB below the carrier levels of the interferring signals. Then, the DPD was removed and a section of cable equal in length to the DPD was installed. When the transmitters were again keyed, there was no detectable change in the intermodulation level.

RF SIGNAL GENERATOR.

See appendix A for block diagrams and schematics. The NAFEC developed RF signal generator is a synthesized signal generator designed to be reliable, versatile, and cost effective when compared to other commercially available units. It may operate as a stand alone piece of test equipment using the front panel controls or as part of the monitor system, under microprocessor control.

Constructed in a modular fashion, all major functions are contained on individual plug-in circuit boards. Several boards are commercially available as off-the-shelf items.

Features of the generator include wide frequency range, low spurious output and noise, and fast response to programming inputs. Also, three levels of modulation may be selected, a calibrated attenuator provides a wide range of output levels, and an RF multiplexer enables one of eight generator RF output ports to be selected.

The RF generator is mounted in a standard 19-inch equipment rack. The mounting brackets were attached to the generator mainframe allowing the front panel to be removed. Servicing may be performed by unplugging individual circuit boards rather than having to dismantle the entire generator mainframe. Controls and indicators were mounted on the front panel while power connections and I/O terminals were mounted on the rear of the generator mainframe. Two layers of RF shielding were provided over the generator mainframe as a precaution against RFI to site equipment.

All receiver testing (on-line and off-line) was performed by injecting a test signal from the RF generator into the receiver. In addition to receiver monitoring, the generator is used to perform a monitor system self check by injecting a test signal into the frequency counter.

RF GENERATOR SPECIFIC DESCRIPTION. For a system block diagram, see appendix A. Each function shown in the block diagram is implemented on a plug-in circuit board. The boards are described as follows:

Synthesizer

This board is available as an off-the-shelf item from Syntest Corporation. See table E-2 for the specifications and figure E-7 for the schematic diagram.

Sinewave Converter

This board is available as an off-the-line item from Syntest Corp (figure E-8). The manufacturer recommends using this board with their synthesizer module. The synthesizer output is a squarewave with high harmonic content and does not have a constant amplitude with frequency. The purpose of this board is to filter the harmonics and provide a low distortion sinewave. This board also has leveling circuitry to provide a constant amplitude RF output.

Specifications as quoted by the manufacturer include a frequency range of 80 MHz to 160 MHz, output variation $\pm$1 dB, harmonic output -28 dB.

Modulator

Provides RF amplitude modulation levels of 0, 30, and 100 percent. Modulation frequency is generated by a 50 kHz crystal oscillator on the board. The 50 kHz is then divided down to 1,000 Hz and used to modulate the RF. Adjustments are provided on the board to fine tune the modulation levels and the amplitude of the unmodulated RF.

Specifications:

Modulation Levels	0, 30, and 100%
Modulator Distortion	0.1%
RF Envelope Distortion	All harmonics > 28 dB down 30%
Frequency Range	50 MHz to 500 MHz

Attenuator

Provides RF attenuation over a 65 dB range with 0.3 dB steps

Specifications:

Frequency Range	20-500 MHz
Attenuation Range	65 dB
Resolution	0.3 dB

VHF-UHF Conv.

This board is not implemented at the present time. Due to limitations of the project schedule, only the VHF frequencies were implemented.

Interface & Digital Control

Contains data selectors which enable either remote programming via a remote interface connector, or local programming via front panel switches.

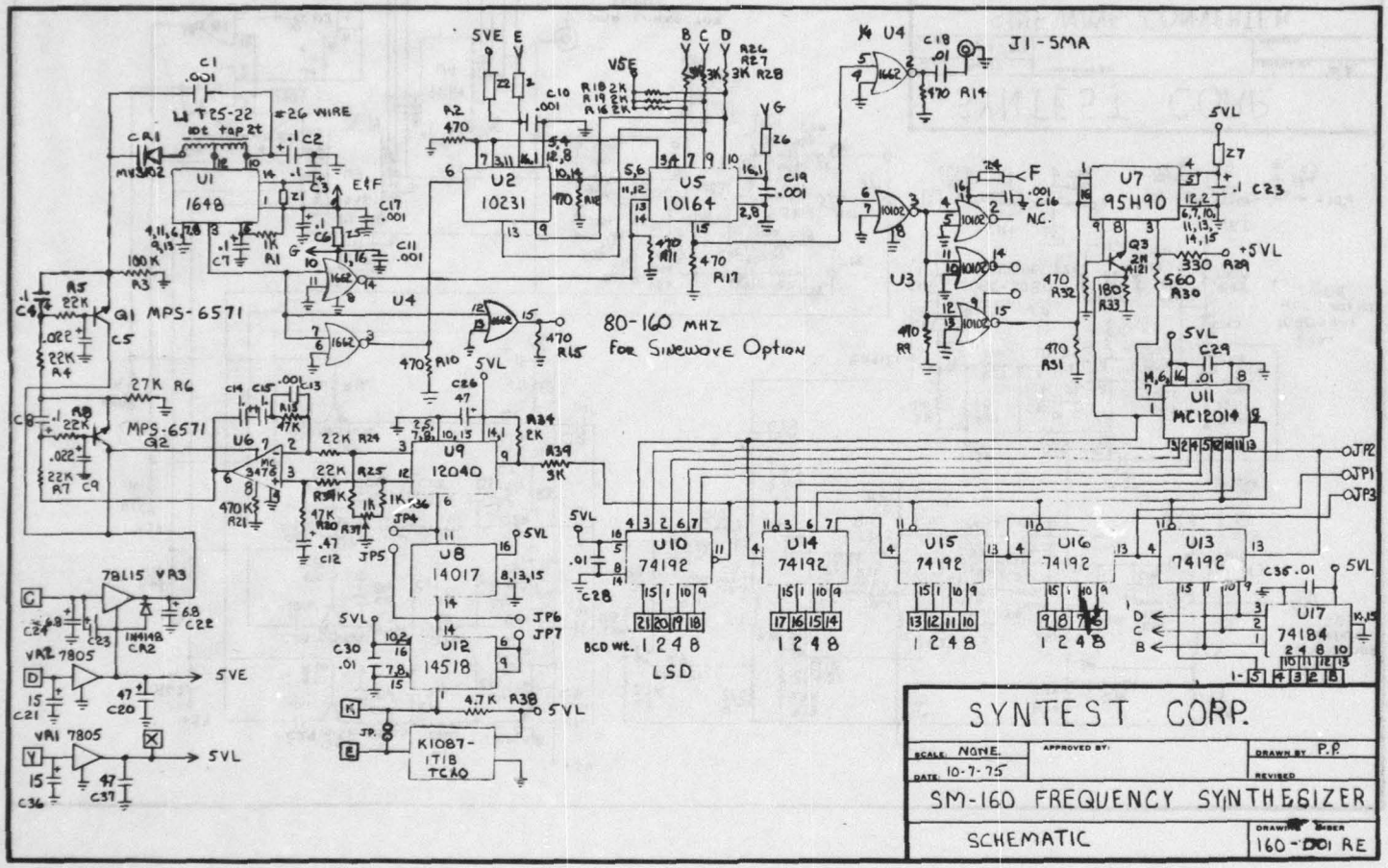

FIGURE E-7. SCHEMATIC DIAGRAM—FREQUENCY SYNTHESIZER

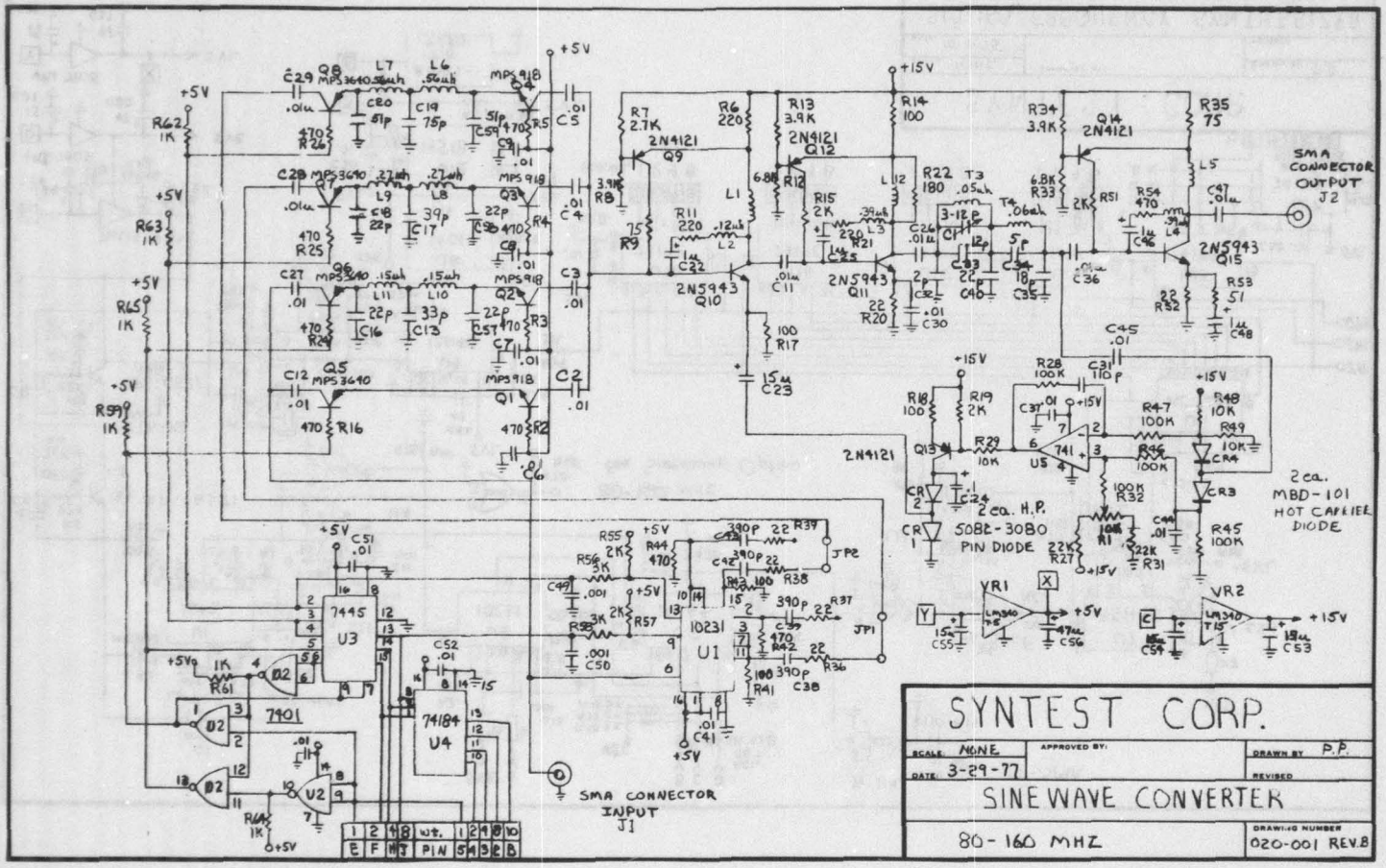

FIGURE E-8. SCHEMATIC DIAGRAM—SINEWAVE CONVERTER

One other function not on a circuit board is the RF multiplexer. It is a one-line to eight-line multiplexer and is used to direct the RF output of the generator to one of eight output ports.

The RF generator is housed in an aluminum chassis which has flanges for rack mounting. The mainframe front panel contains all controls and indicators. The mainframe back panel contains 8 BNC type female terminals, a 50-pin I/O connector, and all power connections.

Front panel controls and indicators:

Frequency Selection	6 thumbwheel switches used to select the generator frequency.
Output Multiplexer	1 thumbwheel switch used to select the RF output port.
Modulation	Three position toggle switch selects 30 percent (Up) modulation off (middle), or 100 percent (down).
Attenuator	Two thumbwheel switches used to select RF output level.
RF On/Off	Two-position toggle switch which enables RF output to the selected port.
Local Remote	Two-position toggle switch which sends a request for local operation to the remote interface.
Local Indicator	A green light emitting diode (LED) which lights when the generator is in the local mode.
Remote Indicator	A red LED which lights when the generator is under remote control.

The RF generator has two modes of operation, local and remote. In local mode it is programmed from the front panel switches; in remote mode, the RF generator is programmed via a 50-pin interface connector mounted on the rear of the mainframe. Local mode is identified by a green lamp on the front panel. Remote mode is identified by a red lamp also located on the front panel. The RF generator is put into either local or remote modes by the logic level present at the local remote input pin (called "localout") on the 50-pin interface connector. If the pin is set to a logical 1, the generator is placed in local mode; a logic zero places the generator in remote mode. The logic level of this input pin is standard positive true transistor-transistor logic (TTL).

NOTE: If a TTL input is left open, the logic level at the input will be a 1. Thus, the RF generator will assume the local mode when no device is connected to the remote interface connector, and may operate as a stand-alone device.

Remote programming data are entered in parallel and must be latched at the controlling device since the RF generator cannot store programming data and will respond to whatever data appears at the interface.

The word length required to program the generator is 40 bits. The bit/pin assignments are shown below:

Frequency	22 bits for 5 1/2 digits (100's MHz requires 2 bits. All other digits require 4 bit BCD code).
Output Multiplexer	3 bits for 8 output ports 0 0 0 Channel 1 VHF main 0 0 1 Channel 1 UHF main 0 1 0 Channel 1 VHF STBY 0 1 1 Channel 1 UHF STBY 1 0 0 Channel 2 VHF main 1 0 1 Channel 2 UHF main 1 1 0 Channel 2 VHF STBY 1 1 1 Channel 2 UHF STBY
Modulation	2 bits 0 0 Off 0 1 30% 1 0 100% 1 1 Not used
Attenuator	8 bits; two hexidecimal digits. Note: a software equation must be used to convert required dB level to hexidecimal.
Local In	1 bit; connected logically to the local/remote switch on the front panel. Indicates a request to change operating modes (local or remote).
Local Out	1 bit; selects either remote or local operation of the synthesizer.
GND	Three pins.

The RF generator was tested using the following test equipment:

Hewlett Packard 141T display section with 8553B spectrum analyzer plug-in.

Hewlett Packard	8604B synthesized signal generator.
Tektronix	7904 oscilloscope mainframe with 7A24 vertical amplifier and 7892A timebase plug-ins.

The following tests were performed to verify the performance of the signal generator:

(1) Amplitude signal to noise ratio, and
(2) Suprious Output

The test set up illustrated in figure E-9 was used.

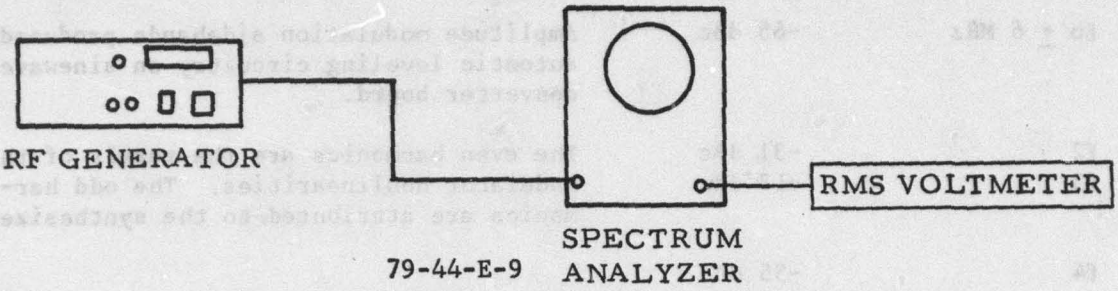

79-44-E-9

FIGURE E-9. TEST SET UP

The purpose of this test was to determine the amount of amplitude noise present in the RF generator output.

The scan width control on the spectrum analyzer was adjusted to a scan width of zero. In this mode the analyzer acted as a fixed tuned receiver providing detection and display of the RF. The analyzer bandwidth controls were adjusted for 30 KHz, 10 KHz, and 3 KHz bandwidths, and amplitude controls were adjusted to provide a noise floor 50 dB below the carrier. The attenuator control on the generator was adjusted to provide a -50 dBm signal level into the analyzer. An RMS voltmeter was used to provide an accurate measurement of post detection noise.

Test Results:

Post Detection Noise	Analyzer Bandwidth	Signal/Noise Ratio
1.51 pw	30 KHz	38.2 dB
0.06 pw	10 KHz	52.2 dB
0.36 pw	3 KHz	44.2 dB

Thus, a worst case signal-to-noise ratio is 38.2 dB.

SPURIOUS OUTPUT (HARMONIC) TEST. This test setup was the same as the signal-to-noise ratio test.

The test was to determine the spurious output of the generator away from the center frequency.

The spectrum analyzer controls were adjusted to read the fundamental generator output frequency plus the first three harmonic frequencies. The

attenuator control on the generator was adjusted for a -50 dBm signal level into the analyzer.

Frequency	Level	Notes
fo ± 6 MHz	-65 dBc	Amplitude modulation sidebands produced by automtic leveling circuitry on sinewave converter board.
f2	-31 dBc	The even harmonics are the result of the modulator nonlinearities. The odd harmonics are attributed to the synthesizer.
f3	-17 dBc	
f4	-55 dBc	
fo ± 1 kHz	-62 dBc	FM sidebands produced by VCO

fo = fundemental generator output
f2 = second harmonic
f3 = third harmonic
f4 = fourth harmonic

Complete specifications of the signal generator are listed below:

Frequency

Range	80 MHz to 160 MHz
Resolution	1,000 MHz
Accuracy and stability	1 PPM (0°-50°C)

Spurious Signals

Harmonic	-17 dBc
Nonharmonic	-60 dBc

Signal-to-Noise Ratio

Signal-to-phase noise	30 dB below 1 radian
Amplitude signal-to-noise ratio	38.2 dB

Output

Impendance	50 ohm nominal
Output SWR	1.06:1
Output level	-20, -85 dBm
Output port	8 channel RF switched
Mating connector	BNC female
Flatness	±1 dB 80 MHz to 160 MHz

Modulation

Levels	0%, 30%, and 100%
Distortion	All harmonics 28 dB below fundamental
Frequency	1,000 Hz

Programming

Logic Type	TTL
Settling Time	10-ms frequency and 10 μs all other functions
Interface	40-wire parallel

General

Power Requirements	+5 V d.c.	1 amp
	+10 V d.c.	1 amp
	+24 V d.c.	0.2 amp
	+15 V d.c.	0.2 amp
	-15 V d.c.	0.2 amp
Size (mainframe)	17.5" W X	5.25" H X 9" D
Weight	7 lb	
Cost (est.)	$1000.00	

LOCAL/REMOTE OPERATION. The RF generator may be used as site test equipment independent of the monitoring system. Confusion and false error reporting would result, however, if care were not taken to alert the monitor processor that it would lose control of the generator to site personnel.

The local/remote switch on the front panel sets a bit at the interface (localin) telling the monitor processor that a request for local operation has been made. The processor checks the bit each time a periodic monitor function cycle is completed. When permission is granted, the processor sets the generator mode control bit (localout) placing the generator under local control. The mode change is indicated by the lamps on the front panel; the red lamp will extinguish and the green lamp will light. If desired, provisions can be made to send a request to the central computer for permission to suspend normal monitor operation and allow the generator to be used locally and thereby alarms will be ignored by the central computer.

If the generator is disconnected from the monitor processor, the generator automatically goes into local mode. (The processor is capable of detecting this.)

FREQUENCY COUNTER.

The frequency counter is a low cost, high resolution counter fabricated at NAFEC specifically for the remote monitor system. It does not have many of

the features available on commercial units, thereby offering a savings in cost.

The counter is used to count the operating frequency of an on-line transmitter each time one is keyed. RF input to the counter is provided by a directional coupler installed in the antenna feedline. RF switching of up to 8 inputs is built into the counter to eliminate the need for external switching.

Frequency information from the counter is displayed on the monitor keyboard/CRT. Digital frequency information is routed to the monitor processor in parallel form via a 50-pin interface connector mounted on the counter chassis. Voltage levels present at the interface are standard TTL levels. The frequency information is coded in hexidecimal format and must be decoded by the monitor processor before being displayed as a decimal number.

No provisions are made to display frequency information at the counter chassis. (A block diagram and associated schematic diagrams are included in appendix A).

Circuitry for the counter is contained on the following three boards:

(a) RF Compression
(b) Time Base
(c) RF Front End and Counter

a. RF Compression

This board is the first stage of the counter. RF input to the counter, which may be amplitude modulated, is sampled from the antenna feedline. At higher levels of modulation, the counter input becomes overloaded during peaks and starved during valleys. The compressor amplifier smoothc out the modulation variations and provides a constant input to the front end of the counter.

The specifications are:

frequency range	50 MHz to 500 MHz
compression range	26 dB
input impedance	50 ohm
input signal level	1 milliwatt

b. Time Base

A temperature compensated crystal oscillator operating at 3.0 MHz is divided by high speed digital logic to obtain a 10 Hz clock rate. The counter stage uses this clock to generate a precision time frame (0.1 sec) used to gate the input RF. All dividing and gating is done by Schottky digital logic which minimizes the time base uncertainty.

Specifications are:

Time base accuracy	> 1 part in 10^7
Uncertainty	20 ns
Output rate	10 Hz

c. RF Front End and Counter

This board contains a prescaler and an event counter. The prescaler divides the VHF or UHF input frequencies by 16. This lower frequency allows the use of lower speed, lower cost digital integrated circuits to implement the event counter.

The output of the prescaler is connected to the input of the event counter through a gate. The gate is controlled by a 10 Hz clock generated on the time base board.

When the counter finishes a count cycle, a flag called EOC is raised, providing an indication to the monitor processor that the frequency data are valid. At this point, the data may be transferred to the processor where it is decoded.

COUNTER OPERATION. Each time a transmitter is keyed, the monitor processor initiates the following count sequence: A reset pulse is applied to the counter. This reset pulse does three things: enables the RF gate to open at the proper time in the 10 Hz cycle, clears the event counter to zero, and resets the EOC flag to zero.

A select word is sent to the counter enabling the proper RF input port. Then the prescaled RF is gated to the event counter for 0.1 second. At the end of the time frame, control circuitry disables the gate and raises the EOC flag. The event counter now contains the actual transmit frequency divided by 16. This data are in hexidecimal form. Thus the monitor processor must convert the hexidecimal data to decimal and multiply by 16 before the data are in suitable form for display.

The counter remains inactive until another reset pulse is applied. The complete counter specifications are in table E-3.

TABLE E-3. COUNTER SPECIFICATIONS

Frequency range	50 MHz to 512 MHz
Frequency resolution	200 Hz
RF drive	1 milliwatt (-40 dBc 10 watt)
Time base accuracy	> 1 part 10^7
Conversion time (from RST to EOC)	0.2 sec max
Power requirements	+15 V, 1 amp
	-15 V, 0.1 amp
RF input	+24 V, 0.1 amp
	1 of 8 input ports (selectable)
Data interface	24 bits for 6 digits frequency information
	3 bits for RF input port selection
	2 control bits - EOC & RST, all signal TTL compatible
Max allowable modulation	95% 50 MHz - 200 MHz
	90% 200 MHz - 512 MHz

MICROCOMPUTER.

The microcomputer system consists of the following subsystems:

a. Microcomputer Board
b. Expansion Memory Board
c. Receiver Sensor Interface Board
d. Transmitter Sensor Interface Board

a. The microcomputer board is a Texas Instruments TM 990/100M. This is a self-contained microcomputer on a single printed circuit board. The heart of the microcomputer is a TMS9900 microprocessor, which, modeled after a minicomputer, provides architectural advantages over other 8- and 16-bit microprocessors.

Some of its features include hardware multiply and divide, eight addressing modes, memory-to-memory transfers, bit addressable I/O, 16 prioritized and vectored interruupts, 16 trap vectors, and direct memory access (DMA).

The extensive instruction set of the TMS9900 reduces programming time, and allows for more efficient software than some other microprocessors that are available.

Also included on the microcomputer board are 4K x 16 bits of TMS2716 EPROM (Erasable Programmable Read Only Memory); 512 x 16 bits of TMS 4042-2 RAM (Random Access Memory); Buffered Address, Data and Control Lines; a 3 MHz Crystal Controlled Clock; two RS232C Interfaces; and three programmable interval timers.

AD-A083 754 NATIONAL AVIATION FACILITIES EXPERIMENTAL CENTER ATL--ETC F/G 14/2
DEVELOPMENT OF AN AUTOMATED REMOTE COMMUNICATIONS AIR-GROUND (R--ETC(U)
APR 80 N J TALOTTA, A J REHMANN
UNCLASSIFIED FAA-NA-79-44 FAA-RD-79-125 NL

2 OF 2
AD A083754

END
DATE FILMED
6-80
DTIC

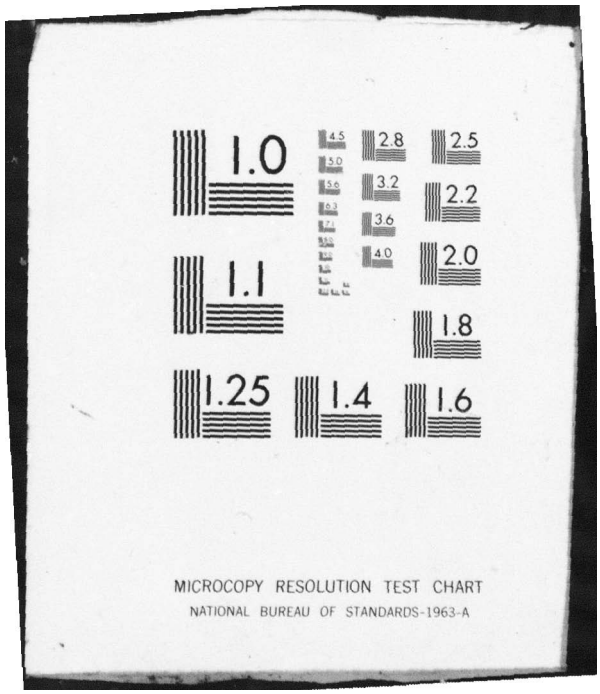
1.0
1.1
1.25
1.4
1.6
1.8
2.0
2.2
2.5
2.8
3.2
3.6
4.0
4.5
5.0
5.6
6.3
7.1
MICROCOPY RESOLUTION TEST CHART
NATIONAL BUREAU OF STANDARDS-1963-A

The microcomputer board is installed in a Texas Instrument 8-slot chassis. This chassis has a printed circuit backplane which busses the address, data, and control lines in parallel between the eight backplane connectors.

b. Expansion memory board TM201 installed in the 8-slot chassis is a single printed circuit board containing 16K x 16 bits of TMS 2716 EPROM and 8K x 16 bits of RAM. The microprocessor accesses this board via the backplane connector.

The addressing scheme of this board has been made variable through use of switches mounted on the board, allowing for several combinations of starting addresses for the EPROM & RAM.

c. Receiver sensor interface board (RSIB) also is installed into the 8-slot chassis. It is a wire-wrappable, multipurpose prototyping card (TMS-512). This card interfaces with the microprocessor via the backplane connector, and with the receivers via the front edge connectors.

The RSIB performs the following hardware functions:

Provides signal conditioning, buffering, and scaling of various receiver parameters such as : IF, AGC, Audio, and Squelch.

Provides multiplexing of the above parameters into an analog-to-digital converter (A/D).

Provides for microprocessor controlled selection of the systhesizer frequency, attenuator setting, modulation control, RF on/off, and local/remote status.

Multiplexing of the synthesizer to the receivers.

Provides an interface from the frequency counter to the microprocessors and control from the microprocessor to the frequency counter.

Provides for calibration of parameters.

d. Transmitter sensor interface board (TSIB) - This board is also a TMS-512 and is installed into the 8-slot chassis. The TSIB performs the following hardware functions:

Prescaling of forward power from the power sensor.

Prescaling of reflected power from the power sensor.

Multiplexing of forward, reflected, and peak power to the TSIB A/D converter.

Level shifting of press-to-talk signals.

Microprocessor interface to A/D conversion.

Provides for microprocessor control of multiplexing.

Provides microprocessor reset of peak detectors.

References: TM990/100M Microcomputer Users Guide
TMS 9900 Microcomputer Data Manual
Digital Design Volume 9, No.5

APPENDIX F

RELATIONSHIP OF ON-LINE SENSITIVITY MEASUREMENT TO OFF-LINE SENSITIVITY MEASUREMENT.

The method of receiver sensitivity measurement is detailed in appendix E. Values of sensitivity obtained in this test may be related to on-line sensitivity measurements. Several techniques have been employed to enable the reduction of injected signal levels into on-line receivers by approximately 20 dB when making the on-line test. Improvements in gain result from: (1) modulating the injected carrier at 100 percent rather than 30 percent, and (2) using a detector with a negative signal-to-noise ratio. A treatment of the correlation between on-line and off-line sensitivity is shown below:

Equation 1: $Vs = VC\ (1 + Vm)$

Vs = Total RF Voltage (Peak)
Vc = Carrier Voltage (Peak)
Vm = Modulating Voltage (Peak)

The increase in RF voltage into the receiver from 30 percent modulation to 100 percent modulation is obtained from equation 1.

$Vs\ 30\% = VC\ (1 + 0.3)$
$Vs\ 100\% = Vc\ (1 + 1)$
expressed in dB,

$$= 20 \log \frac{Vs\ 100\%}{Vs\ 30\%}$$

$$= 20 \log \frac{2}{1.3}$$

$$= +3.74 \text{ dB}$$

An active filter preceeds the PLL. The purpose of the filter is to reduce the noise bandwidth, thereby providing increased loop sensitivity. The active filter has a bandwidth of 140 Hz centered around 1,000 Hz. At this bandwidth, the PLL has a signal-to-noise ratio of -6 dB (reference 2).

The combination of the PLL together with increased modulation results in increased sensitivity of 3.7 + 6 = 9.7 dB.

While performing the standard sensitivity test on a receiver, the signal-to-noise ratio of the 1,000 Hz modulation versus receiver background noise was measured. At rated (10 dB (S+N)/N) sensitivity, the S/N ratio is 9.6 dB. As measured on a Tektronix Spectrum Analyzer mounted in a Tektronix 7904 oscilloscope mainframe, the PLL should lock at:

9.7 dB + 9.6 dB = 19.3 dB below rated receiver sensitivity.

On-line sensitivity measurements performed on NAFEC test receivers range from 15 to 20 dB below rated sensitivity.

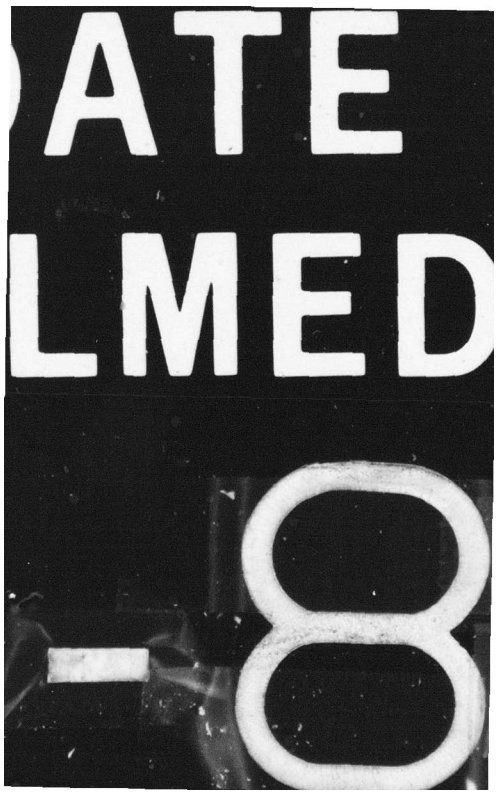
ATE
LMED
8