AD-A070 238 MICHIGAN UNIV ANN ARBOR DEPT OF NAVAL ARCHITECTURE --ETC F/G 13/10
ELECTRONICS AND CONTROL FOR THE SHIPBOARD PRESSURE MEASUREMENT --ETC(U)
MAY 79 V A PHELPS, R KELLER

UNCLASSIFIED NL

| OF |
AD
A070238

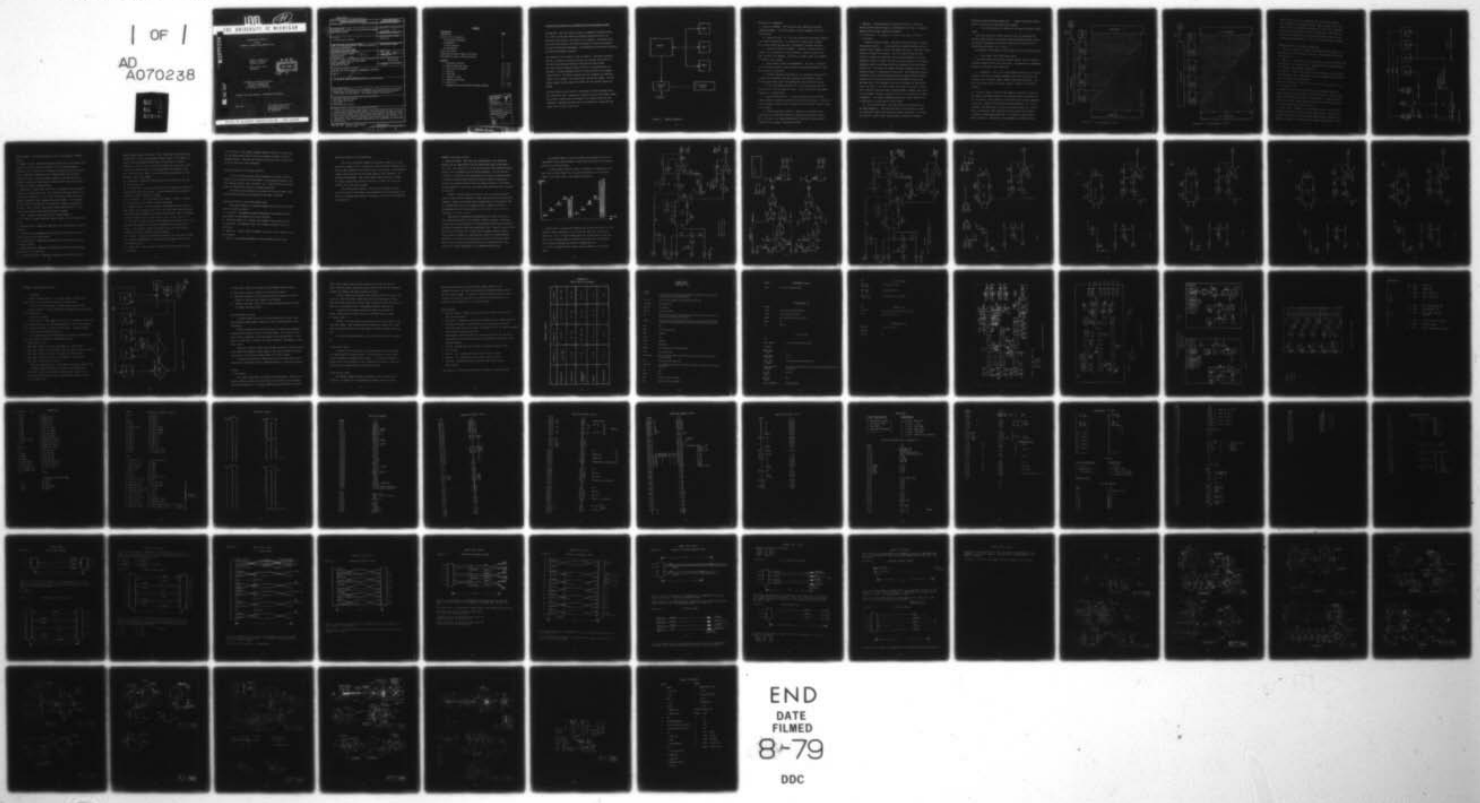

END
DATE
FILMED
8-79
DDC

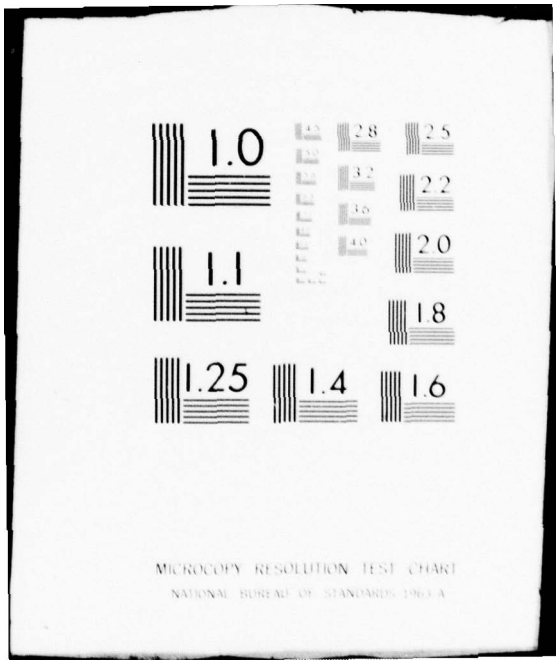
1.0
1.1
1.25
1.4
1.6
2.8
2.5
3.2
2.2
3.6
4.0
2.0
1.8
MICROCOPY RESOLUTION TEST CHART
NATIONAL BUREAU OF STANDARDS 1963 A

LEVEL II

THE UNIVERSITY OF MICHIGAN

AD A070238

Electronics & Control for the Shipboard Pressure Measurement System

Vernon A. Phelps, P.E.
Research Scientist
Project Director

Robert Keller, Ph.D.
Professor

DDC
RECEIVED
JUN 19 1979
C

Department of Naval Architecture
and Marine Engineering
College of Engineering
The University of Michigan

DDC FILE COPY

APPROVED FOR PUBLIC RELEASE: DISTRIBUTION UNLIMITED

MAY 1979

This research was carried out under an Office of Naval Research Contract No. NR-062-572

OFFICE OF RESEARCH ADMINISTRATION · ANN ARBOR

79 06 018 11

UNCLASSIFIED

SECURITY CLASSIFICATION OF THIS PAGE *(When Data Entered)*

REPORT DOCUMENTATION PAGE	READ INSTRUCTIONS BEFORE COMPLETING FORM
1. REPORT NUMBER	2. GOVT ACCESSION NO. / 3. RECIPIENT'S CATALOG NUMBER
4. TITLE (and Subtitle) ELECTRONICS AND CONTROL FOR THE SHIPBOARD PRESSURE MEASUREMENT SYSTEM,	5. TYPE OF REPORT & PERIOD COVERED: FINAL rept.
	6. PERFORMING ORG. REPORT NUMBER
7. AUTHOR(s): V. Phelps and R. Keller	8. CONTRACT OR GRANT NUMBER(s): NR-062-572
9. PERFORMING ORGANIZATION NAME AND ADDRESS: DEPT. OF NAVAL ARCHITECTURE & MARINE ENGINEERING, COLLEGE OF ENGINEERING, THE UNIVERSITY OF MICHIGAN, ANN ARBOR, MICHIGAN, 48109	10. PROGRAM ELEMENT, PROJECT, TASK AREA & WORK UNIT NUMBERS
11. CONTROLLING OFFICE NAME AND ADDRESS: NAVAL SEA SYSTEMS COMMAND (NAVSEA 0331G) WASHINGTON, D. C. 20362	12. REPORT DATE: MAY 1979 / 13. NUMBER OF PAGES: 71
14. MONITORING AGENCY NAME & ADDRESS *(if different from Controlling Office)*: DAVID W. TAYLOR NAVAL SHIP R&D CENTER, SHIP PERFORMANCE DEPT., BETHESDA, MD 20084	15. SECURITY CLASS. *(of this report)*: UNCLASSIFIED / 15a. DECLASSIFICATION/DOWNGRADING SCHEDULE

16. DISTRIBUTION STATEMENT *(of this Report)*

APPROVED FOR PUBLIC RELEASE: DISTRIBUTION UNLIMITED

(10) Vernon A. Phelps
Robert Keller

17. DISTRIBUTION STATEMENT *(of the abstract entered in Block 20, if different from Report)*

18. SUPPLEMENTARY NOTES

This report was prepared by the Department of Naval Architecture and Marine Engineering of the University of Michigan under contract with the David W. Taylor Naval Ship R&D Center. The contract number was NR-062-572.

19. KEY WORDS *(Continue on reverse side if necessary and identify by block number)*

Scanivalve Pressure System
Full Scale Wake Survey
Pitot Tube
Electronics and Control

20. ABSTRACT *(Continue on reverse side if necessary and identify by block number)*

This report presents a description of the electronics and control for the shipboard pressure measurement system. The total system includes the underwater pressure sensors, the lines to bring this pressure information aboard the ship to the electronics and controls, and finally to the computer. This report deals only with the electronics and controls necessary to select and condition the lines for pressure measurement, the transducers and associated electronics.

DD FORM 1 JAN 73 1473 EDITION OF 1 NOV 65 IS OBSOLETE
S/N 0102-LF-014-6601

UNCLASSIFIED
SECURITY CLASSIFICATION OF THIS PAGE *(When Data Entered)*

401 188 LB

CONTENTS

Description	Page
Introduction	1
Description of Components	
(1) Scanivalue Equipment	3
(2) Manifold	4
(3) Miscellaneous	4
(4) Electronics	4
Scanivalue System	5
Operational Details of Master Controller	8
Operational Details of Slave Controller	12
Appendix	
A - Electronic Circuits	A-1 - A-10
B - Master Controller Logic	B-1 - B-5
C - Parts List & Pictorals	C-1 - C-8
D - Main Box	D-1 - D-9
E - Slave Box	E-1 - E-2
F - Connector 5 Hole	F-1 - F-3
G - Terminal Box Wiring	G-1
H - Cable List	H-1 - H-10
I - Boundary Layer and Wake Rake Assembly Drawings	I-1 - I-10

Accession For
NTIS GRA&I
DDC TAB
Unannounced
Justification
By
Distribution/
Availability Codes
Dist | Avail and/or special
A

PRECEDING PAGE BLANK

Electronics and Control for the Shipboard Pressure Measurement System

Introduction: The total system includes the underwater pressure sensors, the lines to bring this pressure information aboard the ship to the electronics and controls, and finally to the computer. This report deals only with the electronics and controls necessary to select and condition the lines for pressure measurement, the transducers and associated electronics, and the system-computer interface.

The schematic of this system is shown in Figure 1. The master controller handles its pressure scanning system and also furnishes the control for the other three pressure scanning systems, called slaved systems. THus four pressure scanning systems, which act in synchronization, are available. Pressure readings from all 4 systems are fed to the computer from the master. The master controller box also furnishes two additional signals to the computer; the channel number and the read signal. Both the channel number and read signals are binary; but the pressure signals are analog.

The final portion of the system is the dynamic pressure measurement from the 5 hole pitot tube. Transducers, located in the pitot tube head, produce the millivolt signals which are brought to the surface, where they are conditioned, amplified and then sent to the terminal box, along with the signals from the master controller.

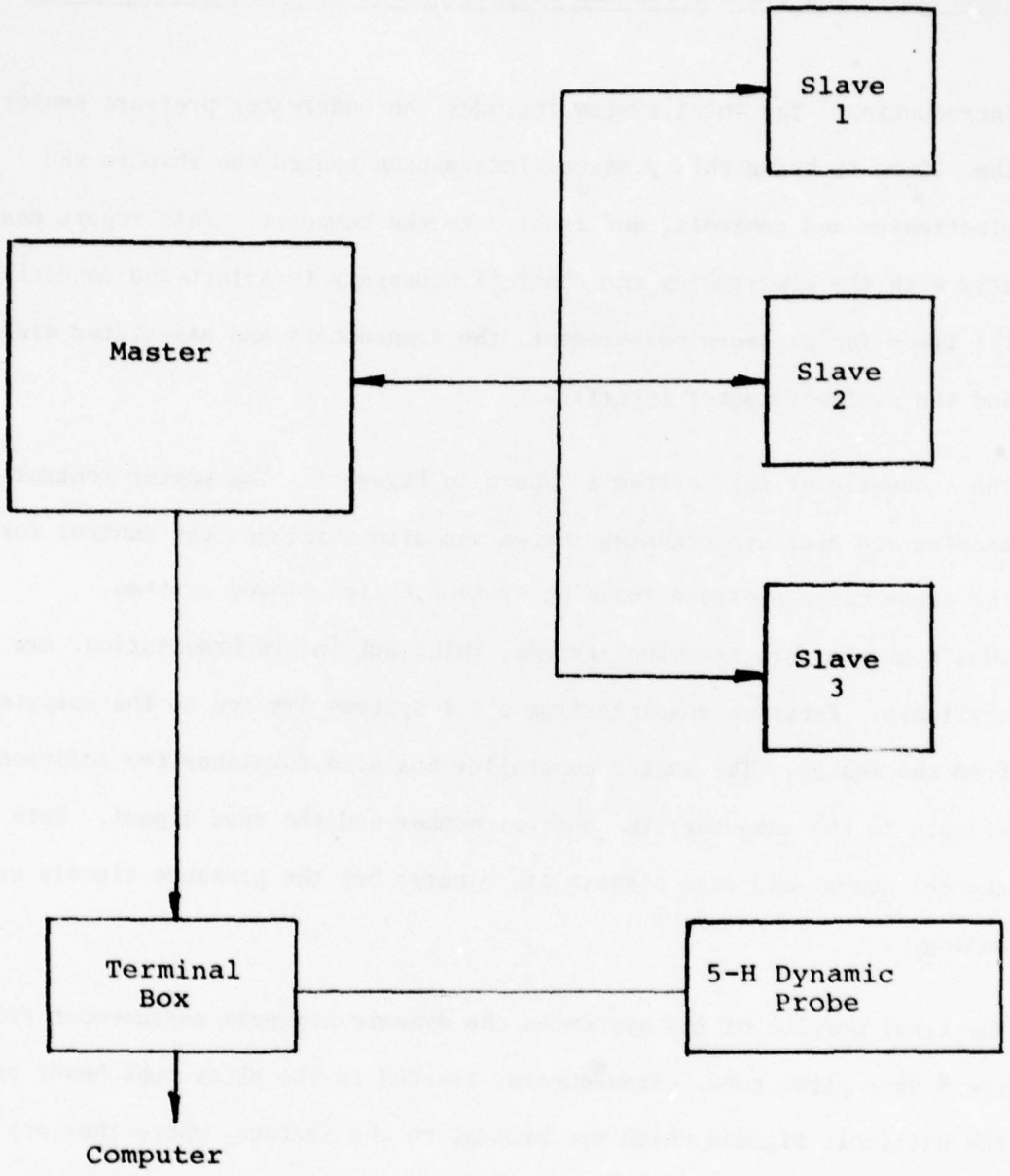

Figure 1. System Schematic

Description of Components.

1. Scanivalve Equipment. The Scanivalve Corp. manufactures pressure scanning equipment. A brief description of their equipment used in this system follows:

A. Scanivalve (48J4 - 1): This unit allows up to 48 pressure channels to be sampled sequentially. It is driven by a geared rotary solenoid, has a channel sensor and provisions for mounting a pressure transducer.

B. Scanivalve Controller (CTLR10P): Furnishes the power actuation signal to the solenoid drive of the Sacnivalve. Controls include step, home, and pulse rate commands. The ability to handle remote step commands is utilized in this system.

C. Binary Channel Counter (CTR2/OETM-BINY): This unit is connected to the scanivalve and has a digital display indicating the channel at which the scanivalve is positioned.

D. Pressure Transducer (Druck PDCR 22 $\pm$ 15 available from Scanivalve): A conventional diaphram strain gage transducer whose features include pressurizing the back side of the diaphram and over-pressure to 60 psig.

E. Fluid Switch Wafers (W1260/6P-IT): Each fluid switch wafer acts like an on-off valve for each of 6 lines. Four of these wafers are mounted together on a solenoid drive.

F. Solenoid Drive (WS5-12): A rotary solenoid drives the actuater shaft to advance the wafers one "notch" for each actu ation pulse. Electrical switches mounted integrally with the shaft allow an electrical "on-off" signal to be obtained.

G. Solenoid Controllers (CTLR10): Similar to the controller unit which drives the Scanivalve solenoid; but without the timed pulse option. Note: This unit is no longer manufactured by Scanivalve, and the CTLR10P is now the only controller available from them.

2. Manifold: A special manifold, constructed from a 2 in. pipe and various fittings delivers supply air individually to 24 lines. A pressure gage and extra fittings complete the assembly.

3. Miscellaneous: Air regulator, 30 psig relief valve, air filter.

4. Electronics

A. Master controller boards. The master controller directly controls one Scanivalve and two fluid switch water (bleed) assemblies and also supplies control signals to each of the three slave units. The master control circuit is arranged on two boards. The first board contains the logic circuits to advance the Scanivalve, drive the read flag high or low and produce the signals to advance the bleed solenoids assembly solenoid drives. Adjustable timers on this board control the duration of the various phases of each cycle. The board also contains the logic required by the various options available in sequencing the Scanivalves. The second board contains the analog circuity for processing the pressure signal from the transducer located in the Scanivalve and also has an analog channel indicator for the strip chart. Also included are two sets of counters for determining "Cmax" and "Purge". All digital inputs and outputs are optically coupled, whcih eliminates ground and supply voltage problems. Complete logic rules, circuit diagrams, pictorals, and parts lists for all electronics are shown in Appendix A. The various sequencing options and control features will be discussed in a latter section of this report.

B. Slave Control Boards. Each slave controls one Scanivalve and two bleed assemblies. Each slave unit has its own electronics, which are considerably simpler than those of the master controller. Each slave unit receives control signals from the master controller (including

Scanivalve advance and bleed signals) and . advances the bleed solenoid based on the position of each bleed valve assembly.

The slave Scanivalve is advanced by the master Scanivalve advance signal.

Each slave board also contains analog circuity for processing the pressure signal from its own Scanivalve pressure transducer before sending this pressure information to the master controller for transfer to the terminal box and finally to the computer.

See Appendix A for complete circuit details on the slave control boards.

C. 5-Hole Dynamic Pitot Tube Pressure Board

This board accepts the millivolt pressure signals from the 5 pressure transducers mounted in the 5-hole pitot tube. The amplified and conditioned signals are then sent to the terminal box.

D. Terminal Box. This is the system/computer interface, to be located adjacent to the digital computer equipment, which takes the signals from the master box (4 pressure signals, channel signals and read flag) and the 5-hole dynamics probe (5 pressure signals) available to the digital computer.

II. Scanivalve System. There are four identical Scanivalve systems; one is driven by the master controller; the remaining three are controlled by the slave boards. Each Scanivalve system contains the following components: a Scanivalve complete with drive and pressure transducer, two bleed assemblies each consisting of 4 fluid switch wagers mounted on a solenoid drive; two manifolds, each supplying one of the bleed valve assemblies, a regulator, piping, gages and filter. This system is shown schematically in Figure 2. Functionally, this equipment is arranged to allow

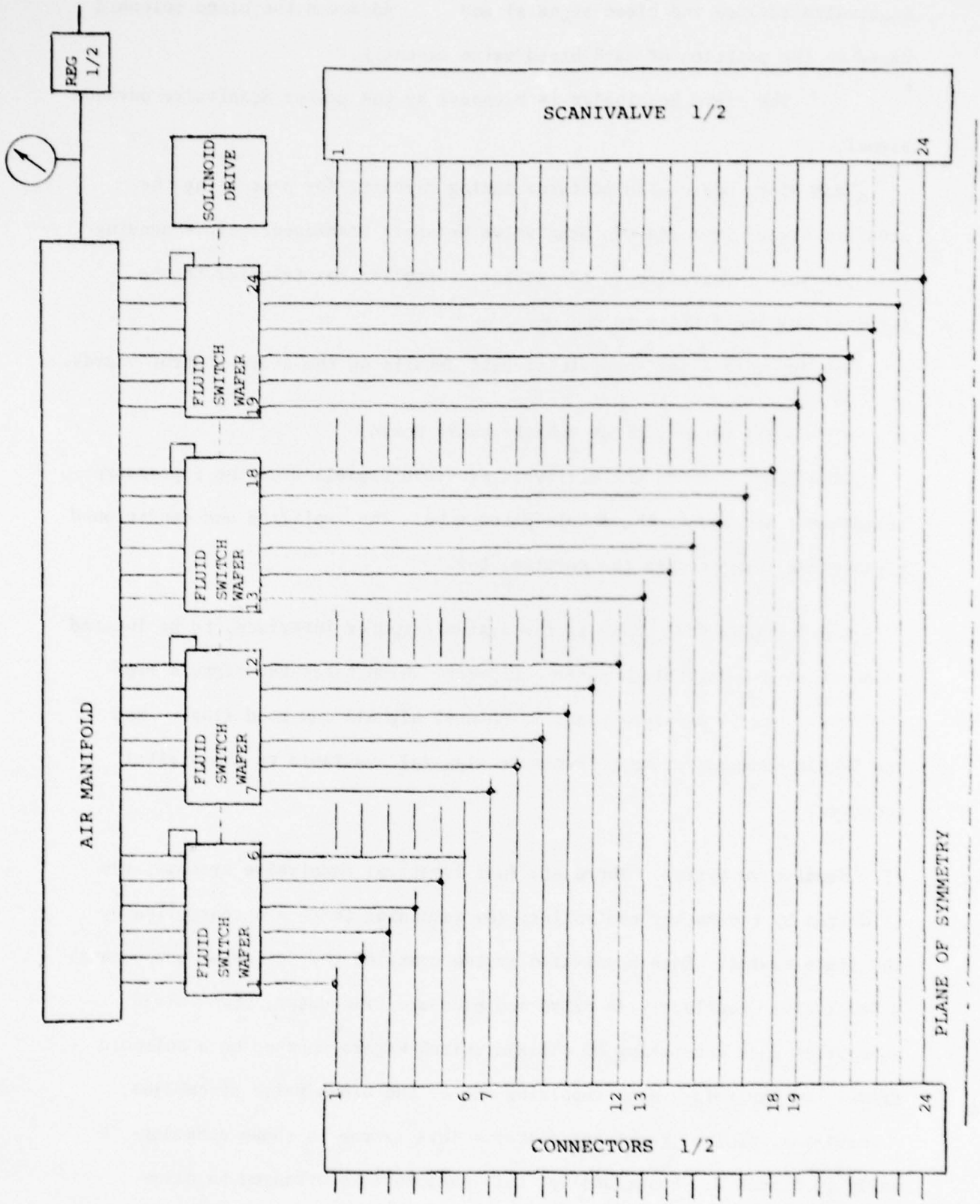

Figure 2. 1/2 of Pneumatic Circuit

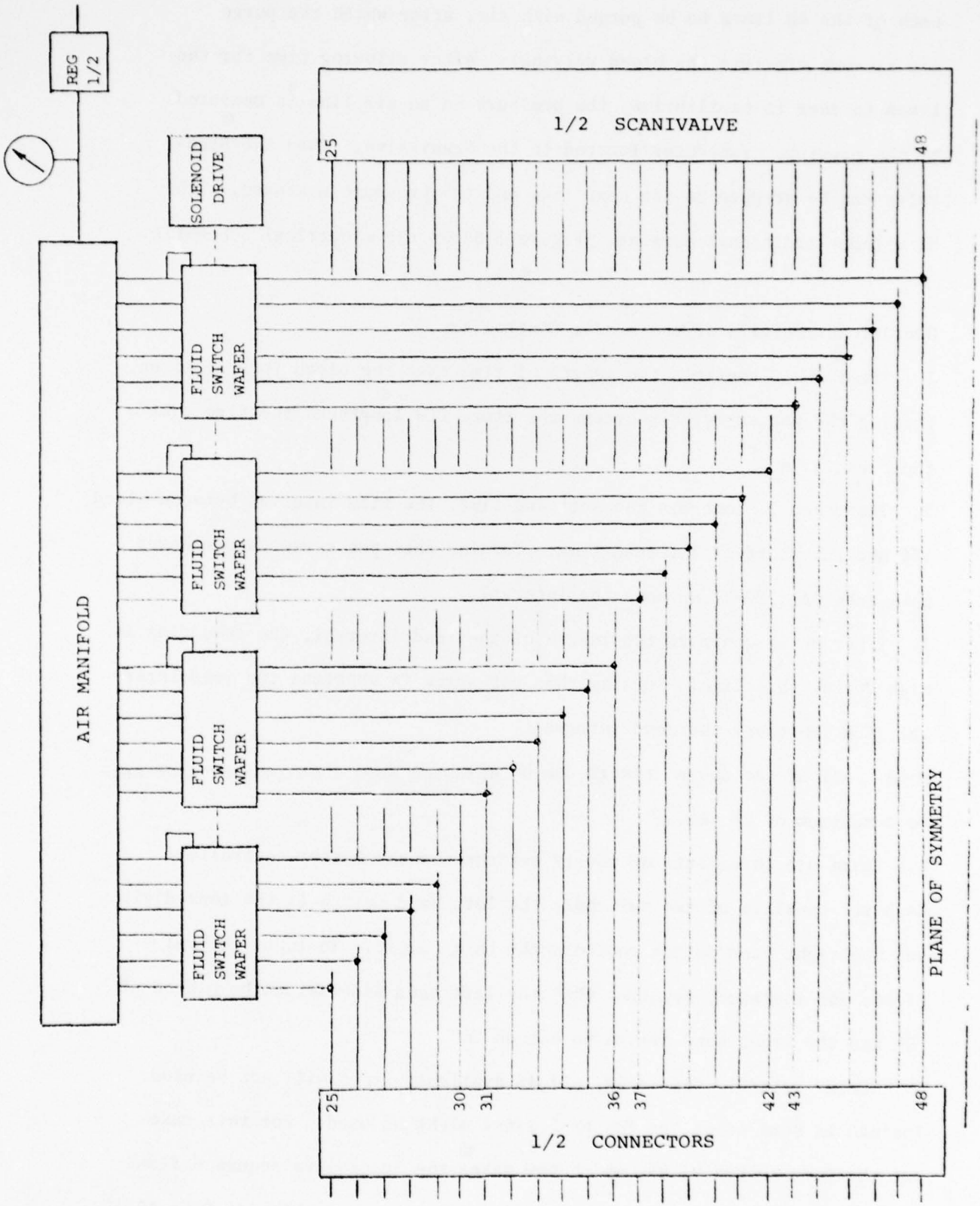

Figure 2b. 1/2 of Pneumatic Circuit

each of the 48 lines to be purged with air, after which the purge air is shut off (via the bleed valving). After allowing time for the lines to come to equilibrium, the pressure in an air line is measured by the pressure transducer located in the Scanivalve. Then the Scanvalve can be stepped to the next line and the pressure measured, with or without additional purging. Figure 3 Shows the electrical schematic.

Operational Details of the Master Controller

1. Timer no. 2 controls the length of time that the bleed (purge) is on, turning the pot screw CW shortens the time, CCW lengthens the time that the bleed is on.

2. Timer no. 3 controls the settling time; the time interval between bleed off and the start of the read time. Turning this pot screw CW decreases this interval; CCW lengthens the interval.

3. Timer no. 4 controls the length of the read interval, the read flag is high during this time. Turning this pot screw CW shortens the read interval, CCW lengthens the read interval.

Note: All of the above timers can be adjusted from a minimum of 0.05 sec to a maximum of 10 sec.

4. There are three sets of rotary switches on the master controller. Each set consists of two switches, the left hand switch is the tens digit and the right hand switch controls the units digit. To input the value of 26, for instance, requires that the left hand side switch be placed at "2" and the right hand switch be set at "6".

5. "Cmax" switch. Generally, all 48 available lines will not be used. Instead in some cases, as few as 5 lines might be used. For this case set the Cmax switch to 05, which now makes the Scanivalve sequence from channels 1 through 5 and allows a rapid indexing from channels 6 to 48,

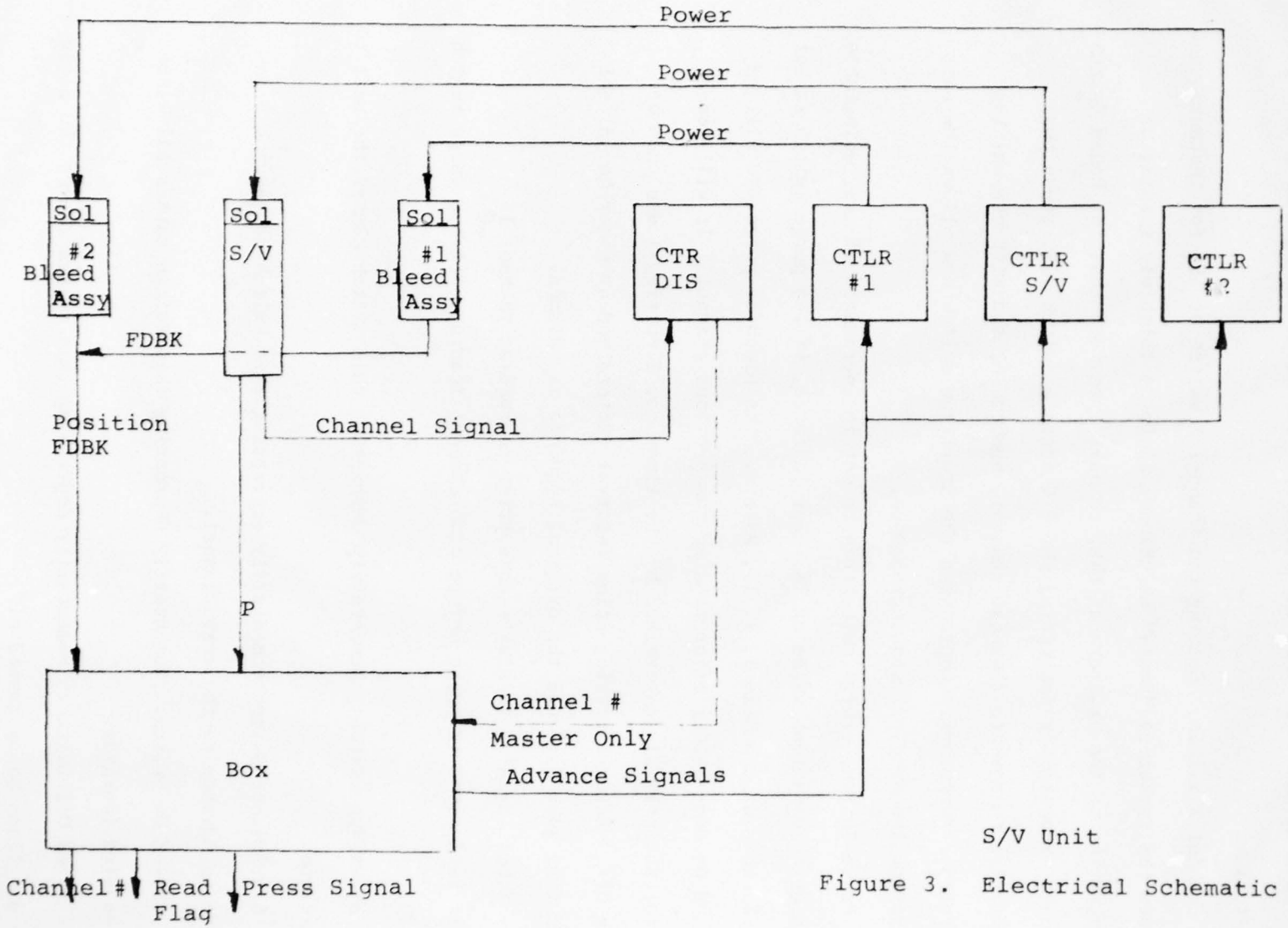

Figure 3. Electrical Schematic

without reading. Note that the bleed air will be on during this indexing interval.

6. Channel X switch. Setting the Channel X switch at 15, for instance, now causes the system to "Pause" at channel 15 for a leisurely reading or examination of the pressure of that channel (provided that the Pause Switch is on). Momentarily depressing the S/V Advance switch will cause the Scanivalve to move to the next channel, number 16, and with the waiting repeated. Momentarily depressing the Start/run switch now allows the unit to resume the original sequencing mode.

7. Purge Switch. Purge switch can be set in increments of two, selectable from 00 to a maximum value of 28. For instance, if the purge switch is set at 08, then on channels 1, 9, 17, 25 etc., the bleed or purge air will be turned on immediately after reading the previous channel. It will remain on for an interval (determined by the timer No. 2 setting) and then be shut off. After a setting time interval (determined by timer No. 3) the read flag goes high and the original sequence is resumed.

Note: purging is always done prior to reading channel 1.
If it is desired to purge before each channel reading, set the Purge switch to 00.

8. Start/Run Switch: Momentarily depressing this switch causes the unit to start/run.

9. S/V Advance Switch: Momentarily depressing this switch causes the Scanvalve to advance to the next channel.

10. Bleed On Switch: Momentarily depressing this switch causes all lines to be bled (purged).

11. Bleed Off Switch: Momentarily depressing this switch causes the bleed for all lines to be turned off.

12. Counter Reset Switch: Momentarily depressing this switch causes the

Cmax and purge counters to be reset. Note: Resetting the Cmax and purge counters does not reset the Scanivalve channel counter. This counter can only be reset by pushing the Home button on the Scanivalve solenoid controller. Failure to reset all counters together will cause the counters to be out of synchronization. This will **not** affect the operation of the unit except that Cmax, Channel X, and the Continuous Run options will not operate at the correct channels.

13. Stop Switch: Momentarily depressing this switch stops the unit after the read flag goes low.

14. Continuous Run: In the off position, unit will sequence to channel 48 (displayed as channel 00) and stop. In the on position, unit continues to sequence to channel 1 when 48 is reached.

15. Pause Switch: In the on position, the "Channel X" option is enabled. In the off position, the channel X option is disabled.

16. Suppress Switch: In the on position, the suppress option is enabled. The suppress option suppresses the zero of the strip chart recorder pressure signal allowing an expanded scale reading of the voltage. Note: the amount of voltage suppression is determined by the setting of the suppress pot.

17. Cal. Switch: Depressing this switch unbalances the bridge of the strain gage pressure transducer by an amount determined by the calibration pot setting. This unbalance signal will appear at the strip chart recorder terminals and also the computer pressure terminals.

18. Gain pots: The gain of the pressure signal to the strip chart recorder can be adjusted independently of the gain for the computer signal, using the appropriate pots.

19. Balance pot: This pot allows the signal to the strip chart recorder to be shifted.

20. Offset pot: The computer pressure signal is offset by 5 volts; that is, the signal varies from -5 volts at no pressure to nearly +5 volts at maximum pressure. Note that the offset pot allows the zero pressure level to be set below zero volts if desired.

Operational Details of the Slave Controller

All of the analog control features present on the master controller board are also present on the slave board: Cal and Suppress switches, and Cal, Suppress, Balance, Gain, and Offset pots. Their functions and adjustments are identical with those of the Master Controller.

No digital control features are available on the slave boards, since all sequencing functions are controlled by the master controller.

Operational Details of the 5-hole dynamic probe.

This board consists of 5 identical analog circuits; only one of which will be described in detail.

1. Cal switch: Depressing this switch unbalances the transducer bridge a fixed amount (as determined by the cal pot setting).

2. Transducer Balance pot: Adjusts the transducer output signal to null for zero input. Not generally used, since original adjustment should be sufficient.

3. Offset pot. Adjusts offset of signal; to get the -5 volts signal at the zero pressure.

4. Gain pot. Allows gain adjustment to get the desired voltage swing.

Operational Details of the Terminal Box

Since all of the digital signals are optically coupled, it is only necessary to supply a + D.C. voltage; say 5 volts to the V+ connection and to use the common terminal for the ground side of this voltage. Then the binary channel signals and the read flag signal appear at their terminals. NO RESISTORS ARE NECESSARY. When these digital signals are "on" or "high", the output voltage will be nearly 0 volts d.c. In the "off" state, the voltages will be the supply voltage.

The analog pressure signals-- from the four Scanivalve pressure transducers and the five dynamic probe transducers are all referenced to the ground of the single power supply of the system. The is the "G" terminal on the terminal box.

APPENDIX A Electronic Circuits

1. Design Philosophy: CMOS logic was chosen because of its high noise immunity and its compatibility with the analog power supply requirements (± 12 VDC). The ubiquitous 555 timer was selected as the variable monostable vibrator from a reliability and glitch-free viewpoint. For the counters, a Johnston or ring counter was used because of its ease of interfacing with conventional multiple-throw single-pole switches. Optical couplers were used for all inputs and outputs (with the obvious exception of the analog pressure signals) to insure that the various boxes and boards were de-coupled electrically.

Position feedback signals were used for all of the bleed solenoid drives to insure that all remained "in step" with the bleed on and bleed off commands. Because of the higher quality construction of the Scanivalve and its solenoid drive, no direct feedback was used. However, the proper synchronization of the four Scanivalves can be checked visually using the displays of the binary counters.

High quality instrumentation amplifiers (AD 521) were used as the first stage amplification for the pressure transducer signals. Selecting a nominal gain for these amplifiers of 100, additional amplification needed was supplied by inexpensive operational amplifiers (741). Separate op amp circuits were used for the strip chart recorder and the computer pressure signals. These op amps, in addition to supplying gain, protect the instrumentation amplifiers in the event of accidental short circuits of the output signal. Balance, gain, offset, and calibration pots on the analog circuits allow detailed and careful adjustments of the signals being processed.

The suppress feature on the strip chart circuit allows the zero to be "suppressed" and the gain increased so that better resolution can be achieved with the strip chart recorder.

An analog channel indicator signal is provided, by weighting the outputs from the units counter into an op amp; and putting a 2 hz oscillator signal on the 0 and 5 count. The channel id pattern is

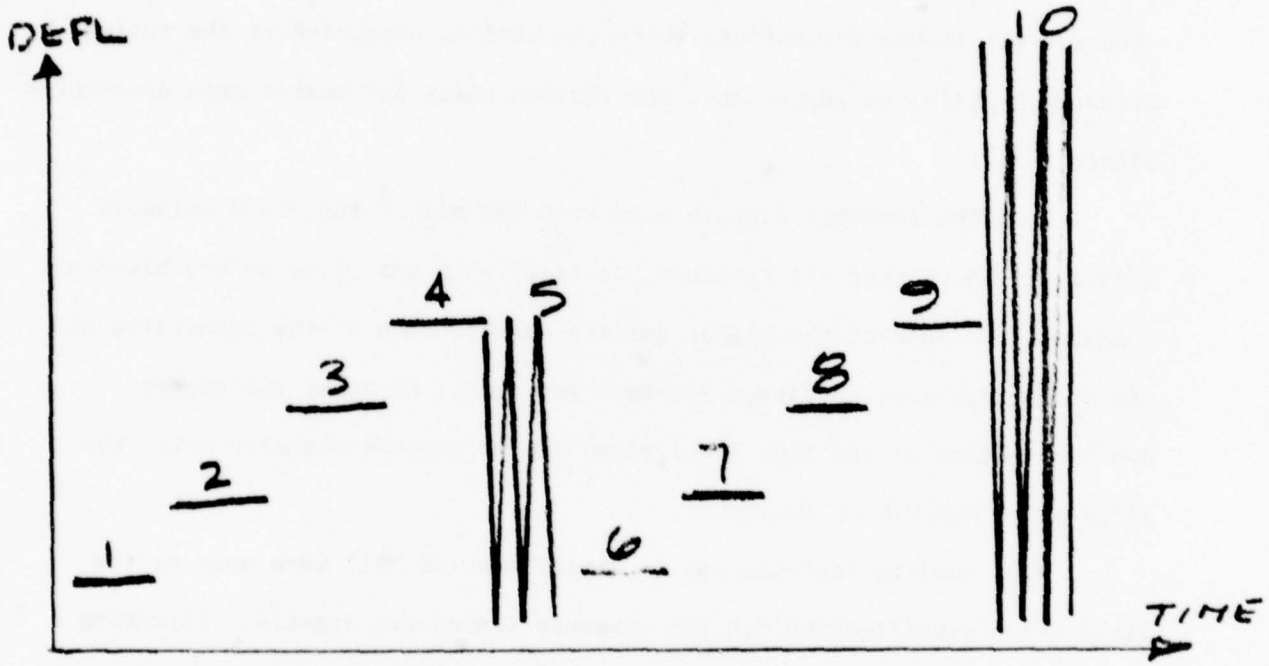

2. Construction. Circuits were constructed on Vector boards with a 0.1 hole spacing. Master boards were 4-1/2 x 9 wile the slave and 5-hole boards were 4-1/2 x 6 in. A Vector wiring pencil with 36 page wire was used; this wire has an insulation which is vaporized by the heat from the soldering iron; thereby eliminating the need for stripping the wire.

3. Circuits, diagram, pictoral, parts lists are shown on the following pages.

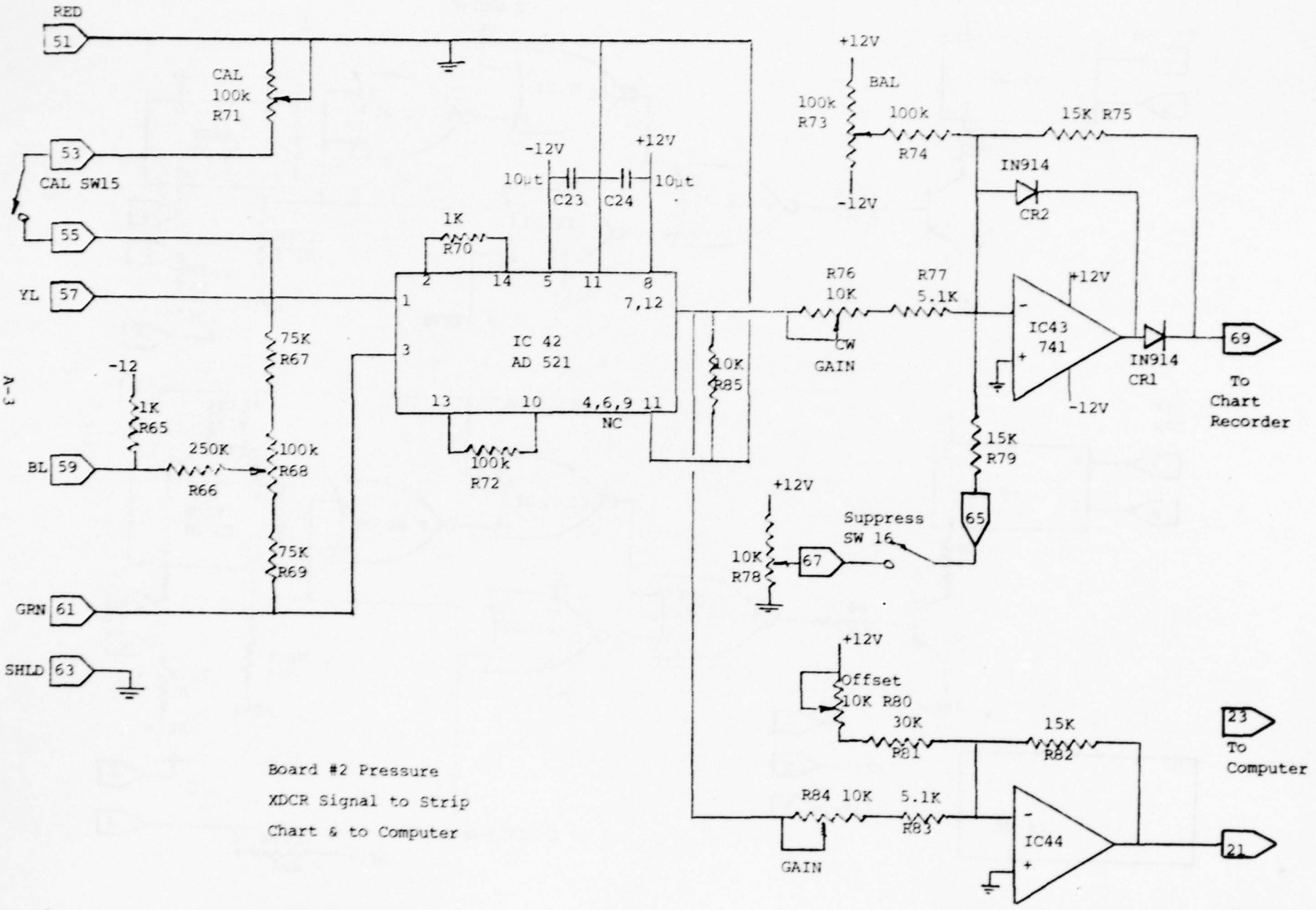

Board #2 Pressure
XDCR Signal to Strip
Chart & to Computer

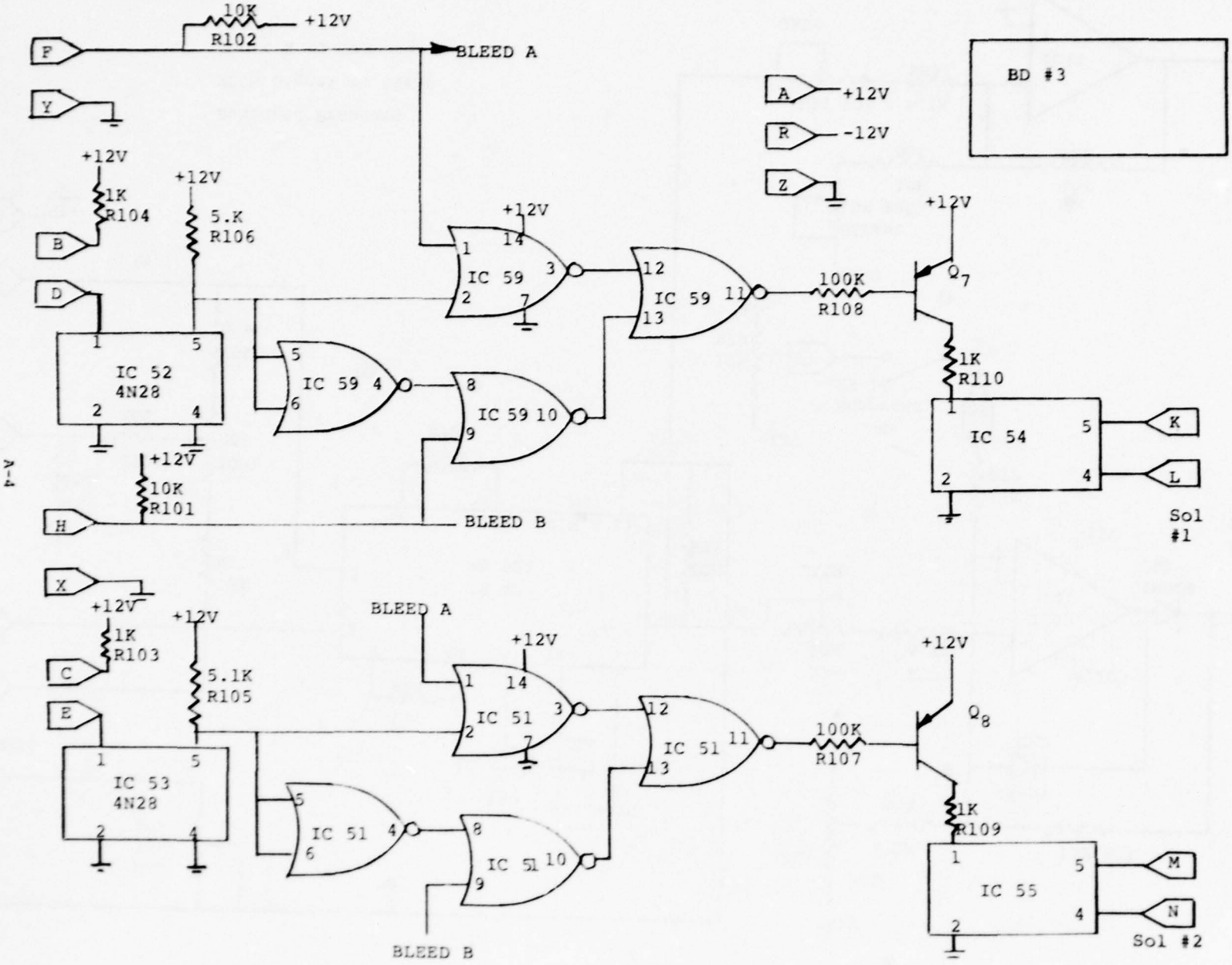
10K
R102
+12V
F
BLEED A
Y
BD #3
A
+12V
R
-12V
Z
+12V
1K
R104
B
+12V
5.K
R106
D
IC 52
4N28
+12V
IC 59
IC 59 4
IC 59 10
IC 59 11
100K
R108
Q7
1K
R110
IC 54
K
L
Sol
#1
+12V
10K
R101
H
BLEED B
X
+12V
1K
R103
C
+12V
5.1K
R105
E
IC 53
4N28
BLEED A
+12V
IC 51
IC 51 4
IC 51 10
IC 51 11
100K
R107
Q8
+12V
1K
R109
IC 55
M
N
Sol #2
BLEED B

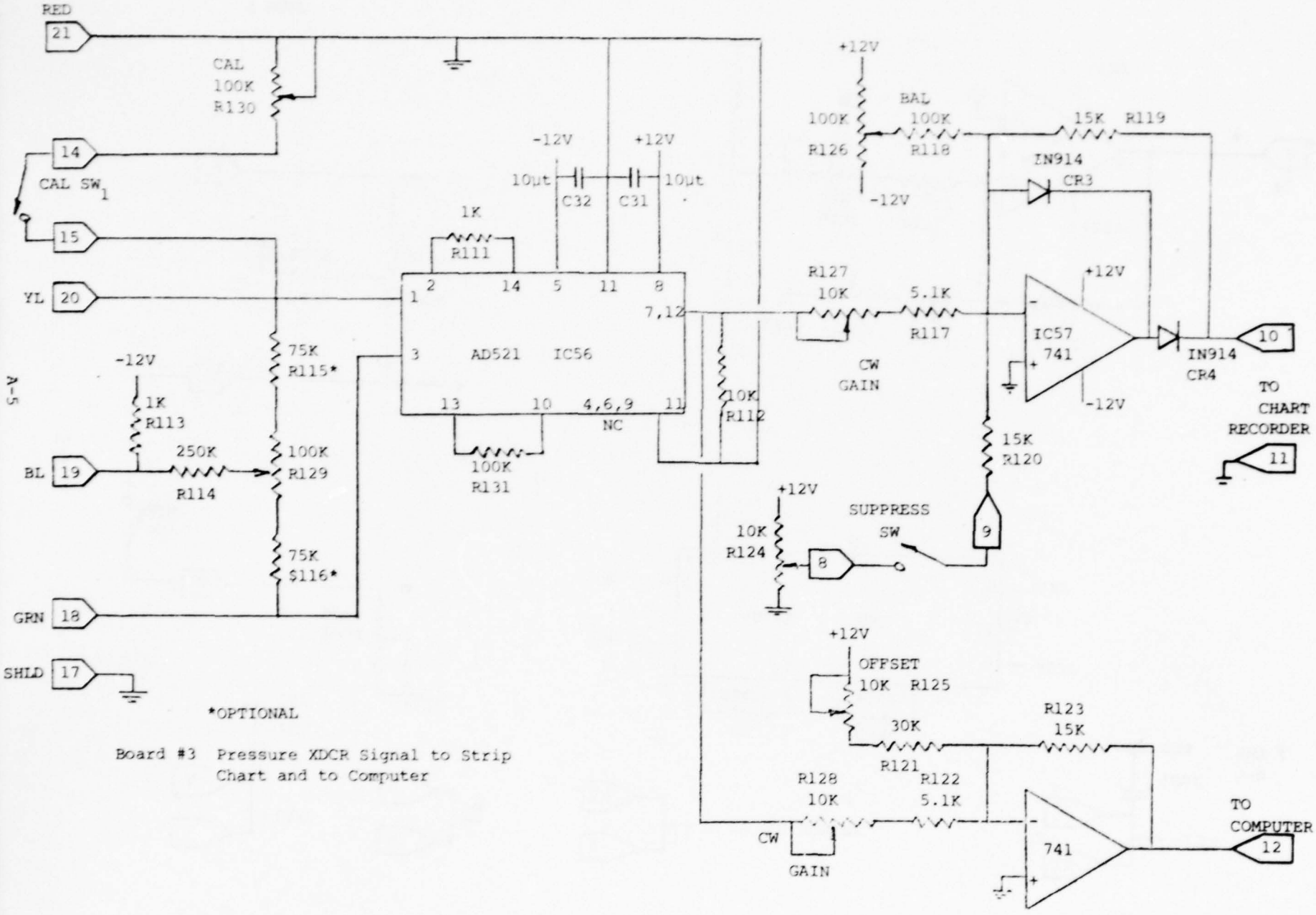

*OPTIONAL

Board #3 Pressure XDCR Signal to Strip Chart and to Computer

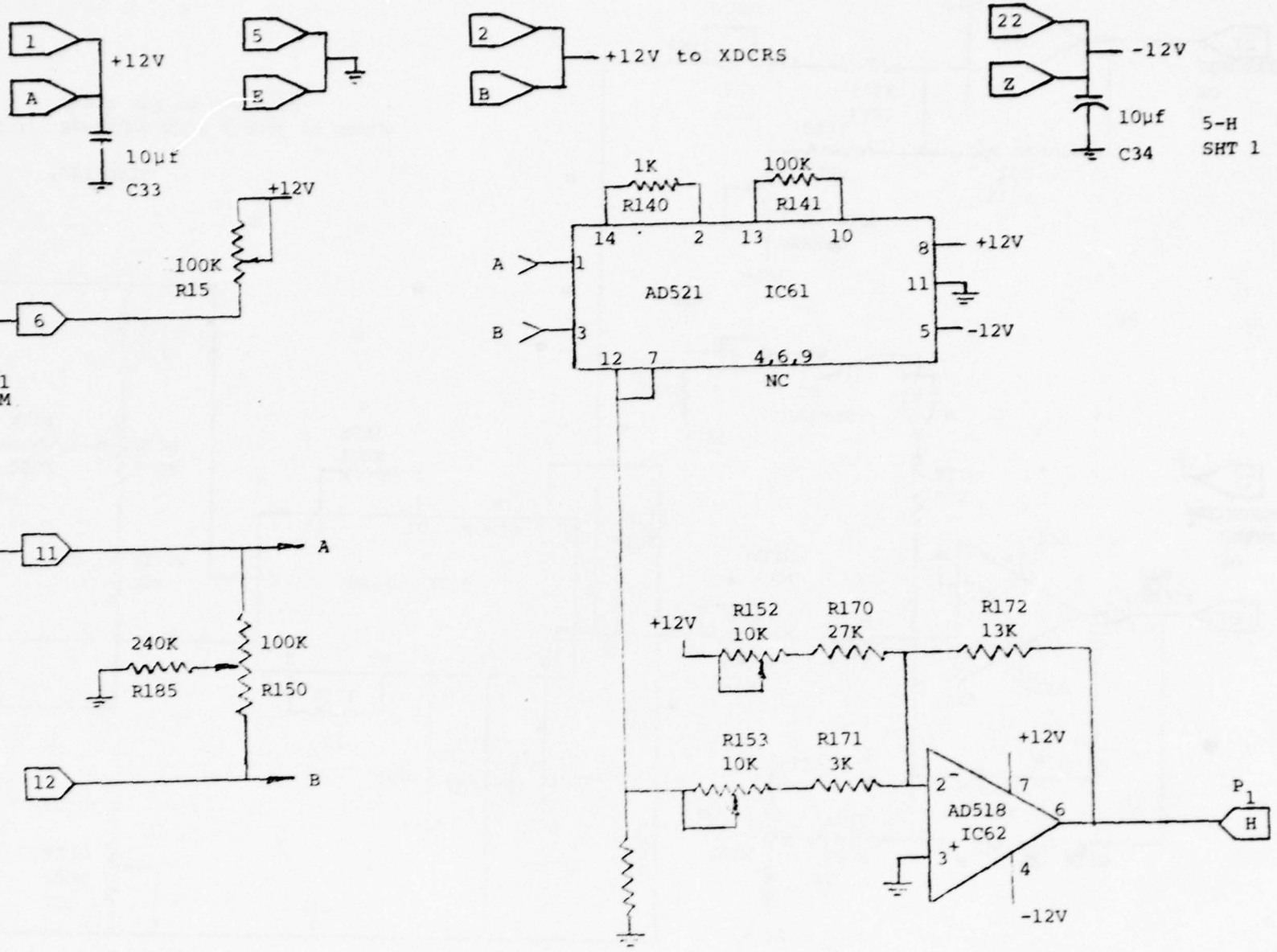
1
+12V
A
10µf
C33
5
B
2
+12V to XDCRS
B
22
-12V
Z
10µf
C34
5-H
SHT 1
1K
R140
100K
R141
14
2
13
10
8
+12V
A
1
AD521
IC61
11
B
3
5
-12V
12
7
4,6,9
NC
+12V
100K
R15
6
SW1
MOM
11
A
240K
R185
100K
R150
12
B
+12V
R152
10K
R170
27K
R172
13K
R153
10K
R171
3K
+12V
2
7
AD518
IC62
6
3
4
-12V
P1
H

A-6

5 HOLE

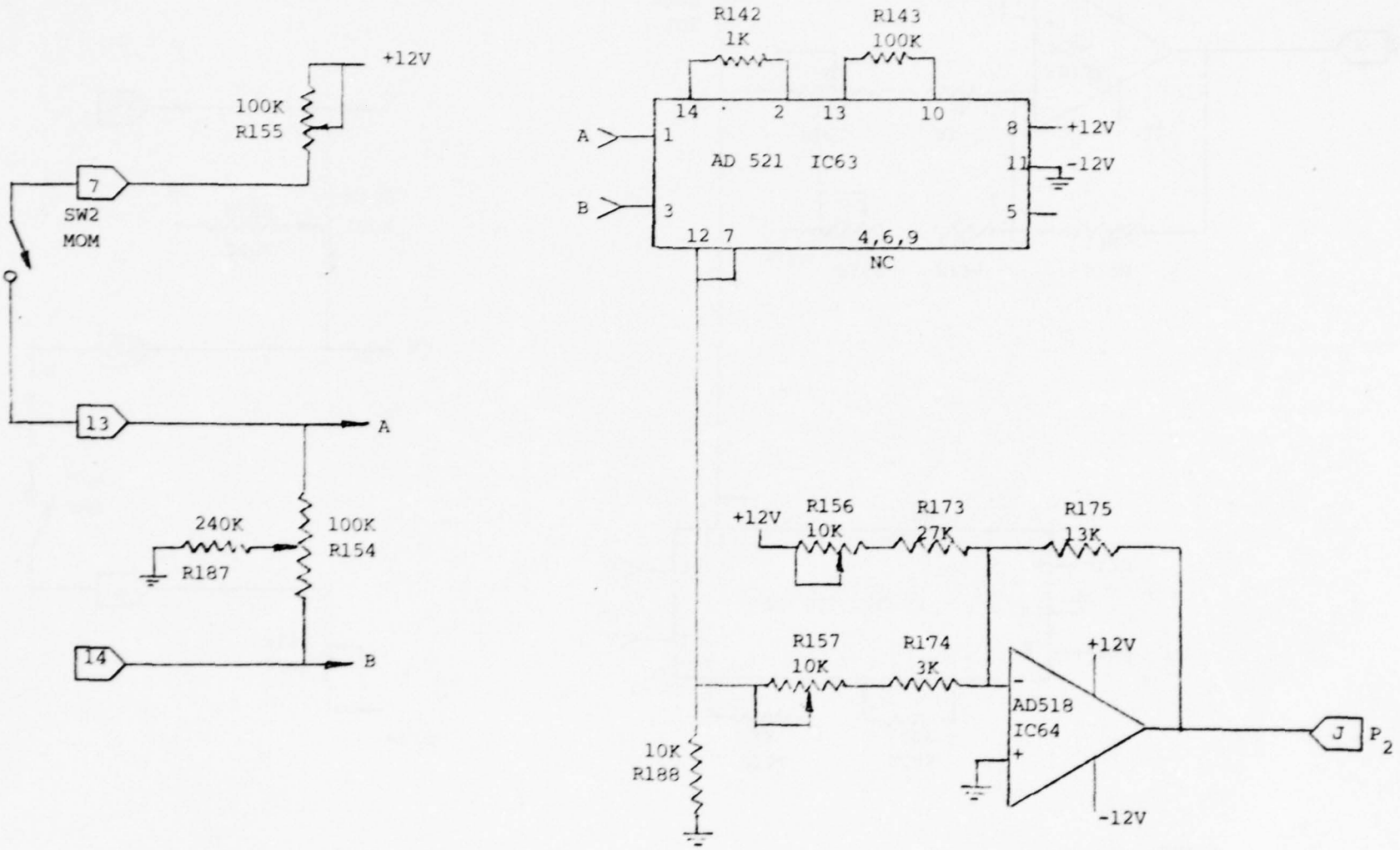
+12V
100K
R155
7
SW2
MOM
13
A
240K
R187
100K
R154
14
B
R142
1K
R143
100K
14
2
13
10
A
1
AD 521 IC63
8
+12V
11
-12V
B
3
5
12 7
4,6,9
NC
+12V
R156
10K
R173
27K
R175
13K
R157
10K
R174
3K
+12V
AD518
IC64
10K
R188
-12V
J
P2

5 Hole

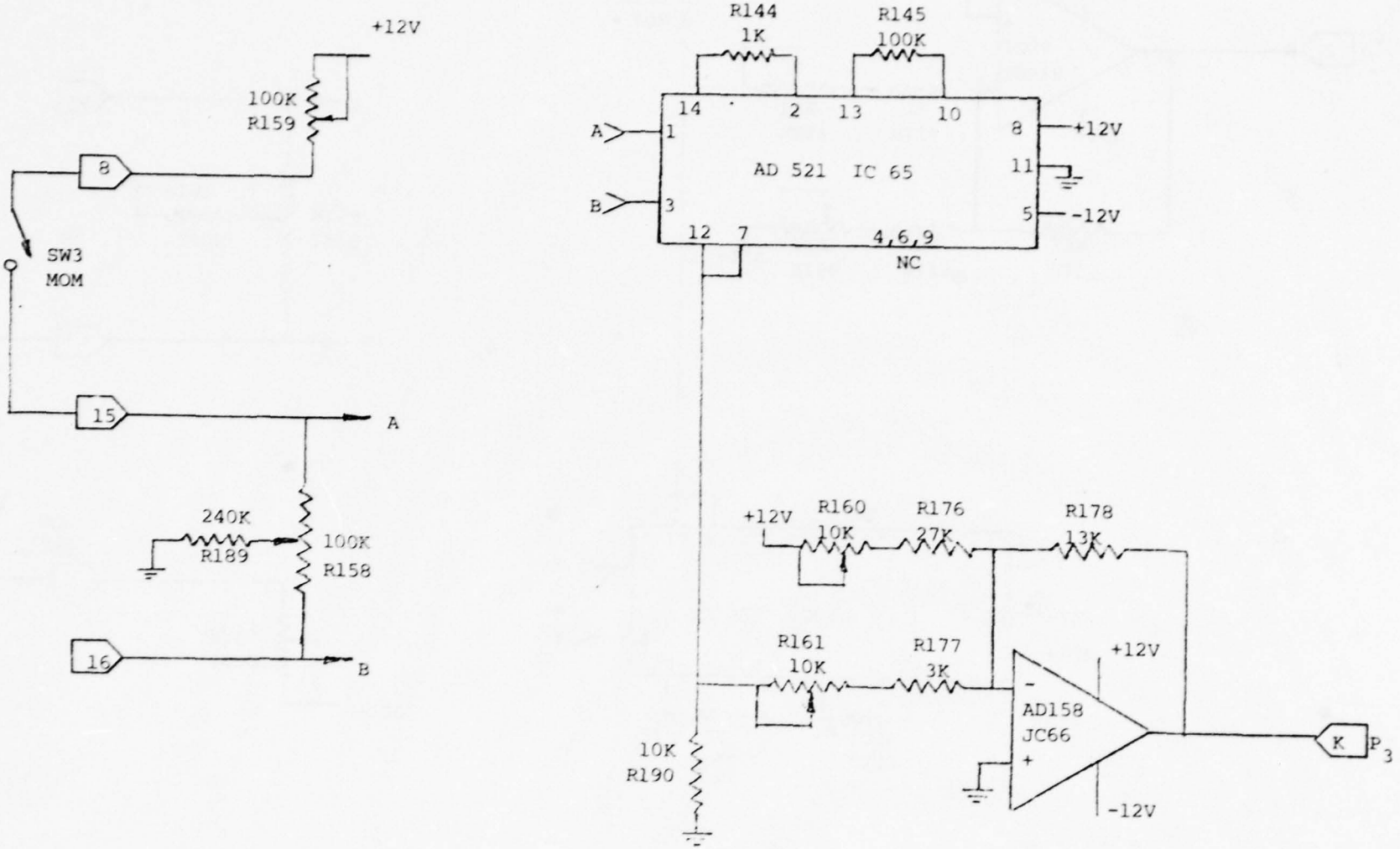
+12V
100K
R159
8
SW3
MOM
15
A
240K
R189
100K
R158
16
B
5 Hole
R144
1K
R145
100K
14
2
13
10
A
1
8
+12V
AD 521 IC 65
11
B
3
5
-12V
12
7
4,6,9
NC
+12V
R160
10K
R176
27K
R178
13K
R161
10K
R177
3K
+12V
AD158
JC66
10K
R190
K
P3
-12V

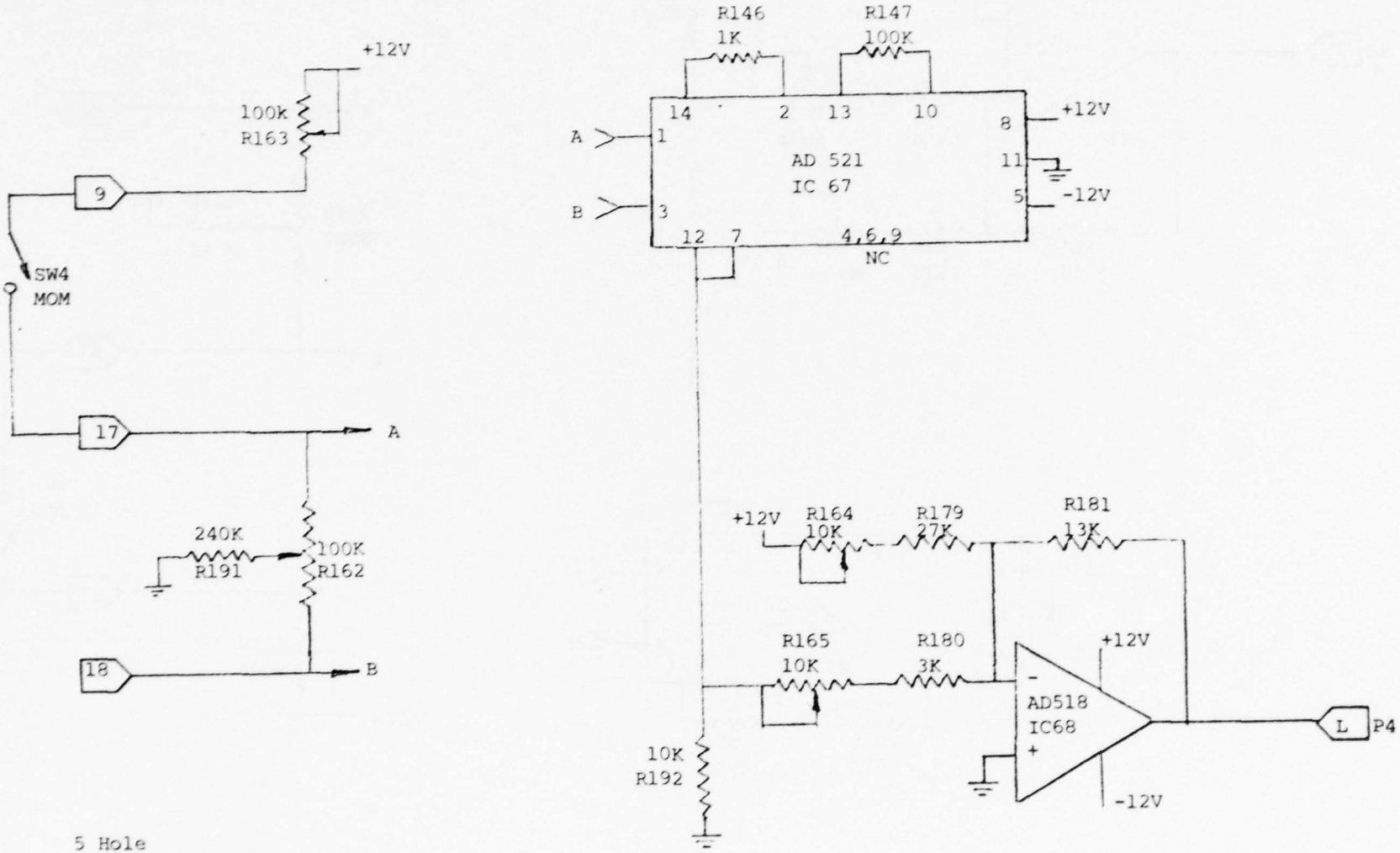
+12V
100k
R163
9
SW4
MOM
17
A
240K
R191
100K
R162
18
B
5 Hole
R146
1K
R147
100K
14
2
13
10
A
1
B
3
AD 521
IC 67
8
+12V
11
5
-12V
12
7
4,6,9
NC
+12V
R164
10K
R179
27K
R181
13K
R165
10K
R180
3K
+12V
AD518
IC68
L
P4
10K
R192
-12V

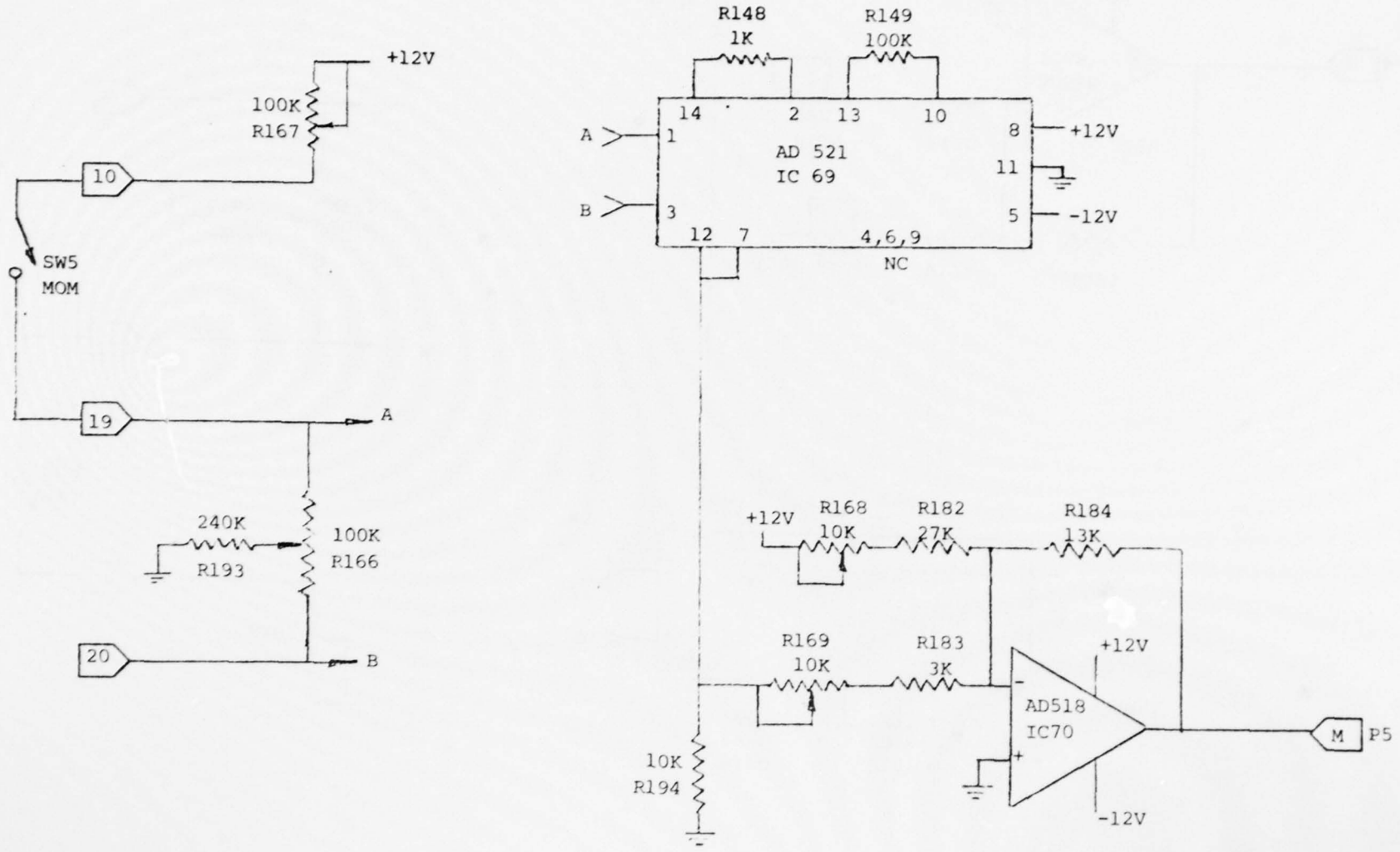
+12V
100K
R167
10
SW5
MOM
19
A
240K
R193
100K
R166
20
B
R148
1K
R149
100K
14
2
13
10
A
1
AD 521
IC 69
8
+12V
11
B
3
5
-12V
12
7
4,6,9
NC
+12V
R168
10K
R182
27K
R184
13K
R169
10K
R183
3K
+12V
AD518
IC70
M
P5
10K
R194
-12V

5 Hole

APPENDIX B Master Controller Logic

Flip-Flops

1. A counter flip-flop (FF1) = 1 if the Cmax counter is equal to or greater than 1 but less than the setting on the Cmax dials.

FF1 = 0 if the Cmax counter is greater than or equal to Cmax.

2. A purge flip-flop = 1 if the purge counter reaches the value set by the purge count dials.

Purge = 0, otherwise.

3. A read flipflop = 1 while timer 4 is on, and = 0, otherwise. This is the read flag referred to in the following description. Also, the pulse which sets this flip-flop high is called the "read pulse". Pressure readings will be made only when the read flag is = 1.

The following steps are approximately in the order in which they are executed. Figure B-1 provides a simplified flow chart.

1. Assume timer 1 is on.
2. When timer 1 times out and FF_1=1 and purge = 1, start timer 2.
3. When timer 2 times out, start timer 3 and also provide a Bleed off pulse.
4. When timer 1 times out and FF_1=1 and purge = 0, start timer 4.
5. When timer 1 times out and FF_1 = 0 and purge = 0, start timer 5.
6. When timer 3 times out, start timer 4.

   Along with starting timer 4, also provide a read pulse signal and set the read FF high (equivalent to setting the "read flag high")
7. When timer 4 times out and enable is high, provide a pulse to the Scanivalve (S/V) for both the master and the slaves, also start timer 1 and set Read FF low.

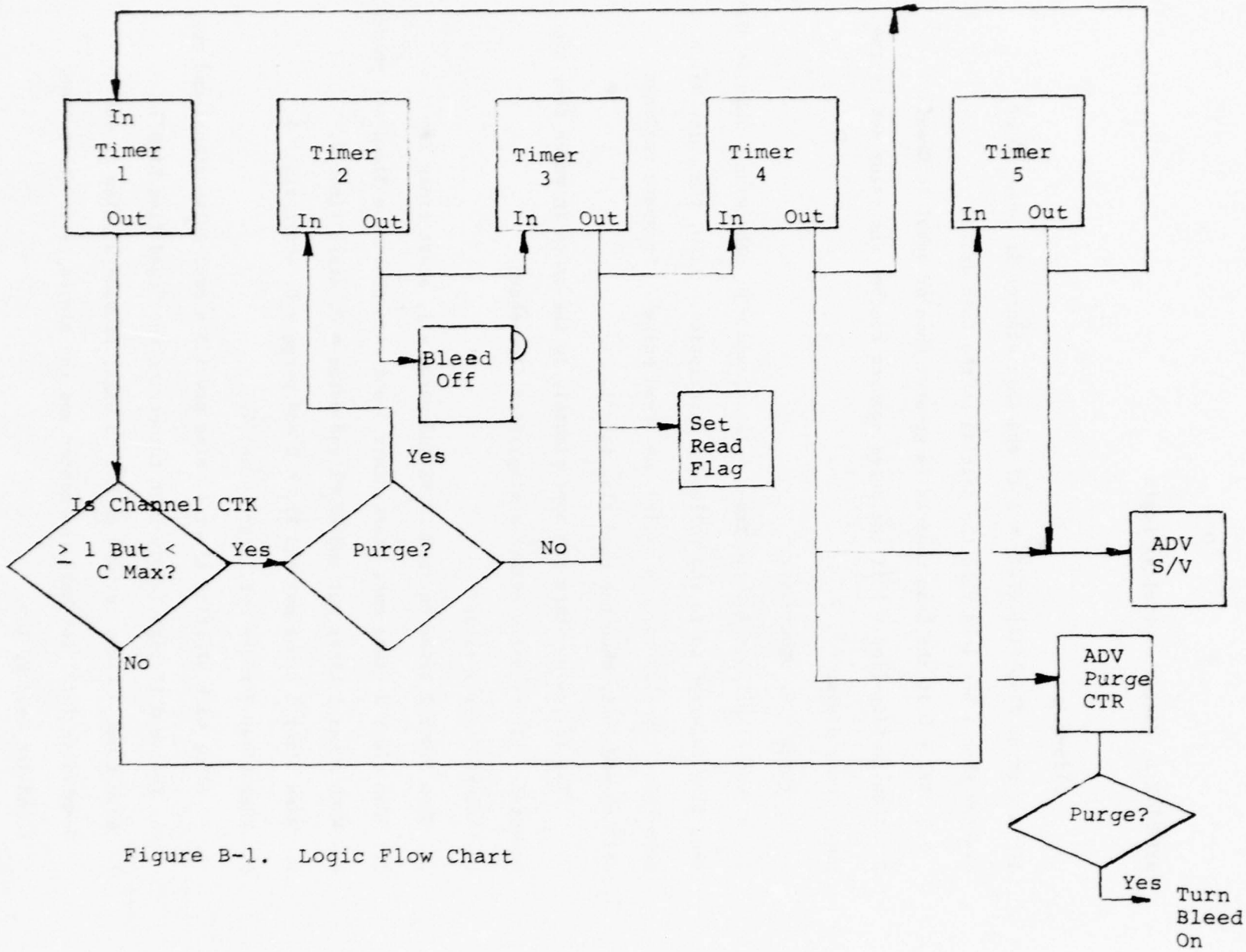

Figure B-1. Logic Flow Chart

8. When timer 4 times out and purge is high, provide a bleed on pulse.

9. When timer 5 times out, advance the S/V and start timer 1.

10. Momentary depression of the start/run switch is equivalent to timer 4 timing out, then the logic rules of 7 and 8 apply.

11. Momentary depression of the S/V adv switch provides a master and slave S/V signal, and starts timer 1.

Bleed Off/Bleed On Circuits

A feedback signal from each of the two bleed drives is used, along with the bleed command signal (either off or on) to keep both units in synchronization.

Bleed off signal from the logic circuitry or a manual input command is compared with the status of each of the bleed drives. If the drive is "on", then a pulse is generated to step the solenoid to the next position. If the drive is already "off", the bleed off signal is ignored. This applies to both units 1 and 2.

Similarly, a bleed on signal from the logic circuits or a manual bleed on input command will generate a pulse signal to the drive controller, provided that the unit (1 or 2) has its switch wafer in the "off" position.

The bleed off and bleed on signals also go to the slaved units, where the slaves follow identical logic to determine whether to step their solenoids.

Counters

a) Cmax counter

Two counter ships (4017) are used for the Cmax counter. Each chip is a decimal counter; one chip is used for units and the other for tens counting. Each chip has outputs 0 to 9, the S/V advance provides the input to the units

chip; a carry signal from the units chip goes to the input of the tens chip. Thus this counter follows the binary counter; each time the Scanivalve advances one channel, the counter advances one count.

A pair of single pole, multiple throw switches allows the value of Cmax to be set. When the counter reaches this value, the Cmax signal is high. When the counter reaches 48, a FF goes high. With the FF high, the counter is reset to 0; resetting can also be accomplished manually using CTR R S.

A second pair of wwitches provides the input for the Channel X signal. When the count reaches this value, the CHNL X signal is high.

b) Purge counter

Similar to the Cmax counter, except that the clock input signal is the read pulse signal. Input switches allow the setting of "purge count". When the count reaches this value, a FF goes high to provide the purge output signal.

This resets the purge counter to 0, as will the Cmax counter reaching 48.

Analog Channel Signal

The outputs of the units chip of the Cmax counter are used as inputs to a simple digital to analog converter. The DAC consists of these inputs, suitably weighted, and summed with an op amp. A 2 Hz oscillator supplies a signal to the 5 and 0 channels to add a distinctive oscillation of the pen of the strip chart recorder which is used for this signal.

Analog Pressure Signal

The pressure transducer signal processing is also contained in the circuitry. It consists of an instrumentation amplifier and two op amps.

One op amp is used for the analog pressure signal supplied to the computer interface. The other op amp supplies the analog pressure signal to the strip chart recorder. In addition to balance and gain controls on both op amps, the recorder op amp also has an option for suppressing the zero, allowing a better resolution of the pressure signal.

Manual Controls

1. Start/run switch. Pushing this switch sets the enable FF high and also gives the start pulse.
2. Stop switch. Pushing this switch sets the enable FF low, halting operation.
3. Continuous run switch. With this switch on, unit continues operation; with this switch in the off position the enable FF is set low when the channel count reaches 48, halting operation.
4. Pause switch. With this switch off, unit proceeds; with this switch on, the enable FF is set low when channel count reaches the "channel x" value, halting operation
5. S/V ADV. Pushing this switch provides a Scanivalve advance reaches signal pulse.
6. Man Bld On. Pushing this switch gives a bleed on pulse.
7. Man Bld Off. Pushing this switch gives a bleed off pulse.
8. CTR Reset. Pushing this switch resets the Cmax counter and the Purge Counter.

Time Controls. On all timers,pots allow a selection of timing intervals.

COMPONENT NUMBERS

	Board No. 1	Board No. 2	Board No. 3	5 H Board
Resistors	1 - 49, 200 - 206	50 - 94	101 - 131	140 - 194
Capacitors	1 - 18	20 - 25	31 - 32	33 - 34
Integrated Circuits	1 - 24	30 - 50, 60	51 - 59	61 - 70
Diodes	8 - 18	1 - 2, 5 - 7	3 - 4	——
Transistors	1 - 6, 9	——	7 - 8	——

PARTS LIST

RESISTORS (R)

Value	
10 K	1,2,3,4,5,6,7,8,24,25,40,49,50,51,85,101,102,112,124, 186,188,190,192,194,200,203,
5.1 K	9,11,13,15,28,30,77,83,105,106,117,122,
1 M pot	10,12,14,16
150 K	17,21,56
510 K	18,19,20,205,
1K	22,29,31,33,35,37,39,41,42,43,44,65,70,103,104,109,110, 111,113,140,142,144,146,148,
100 K	23,26,32,34,36,38,45,46,47,48,62,72,74,86,87,88,89,90, 91,92,94,107,108,118,131,141,143,145,147,149,201,206,
750	27,
30K	52,53,61,81,121,
62K	54,55,
200K	57,
330K	58,64
1 M	59,60,63
240K	66,114,185,187,189,191,193,
75K	67,69,115,116
100K pot	68,71,73,126,129,130,150,151,154,155,158,159,162,163, 166,167,204,
15K	75,79,82,119,120,123,
10K pot	76,78,80,84,125,127,128,152,153,156,157,160,161,164,165, 168,169,
33K	93,
1500	202,
27K	170,173,176,179,182,
3K	171,174,177,180,183,

RESISTORS (cont.)

Value	
13K	172,175,178,181,184

CAPACITORS (C)

Value	
.1µF	1,2,5,8,11,13,18,20,21,
.01uF	3,6,9,12,14,16,25,
10uF	4,7,10,23,24,31,32,33,34,
50uF	15,
1 F	17,32

I.C.'s (IC)

No.	
4011 Nand 2 Input	1,2,3,5,8,9,30,35,37,60,
4002 Nor 4 Input	4
4049 Hex Invertor	6,32
4001 Nor 2 Input	7,14,15,16,31,36,38,51,59
4N28 Optical Coupler	10,11,17,18,19,20,21,22,23,45,46,47,48,49,50,52, 53,54,55,
NE 556 Timer	12,13,
NE 555 Timer	24,
4017 Counter	33,34,39,40,

No.	I.C.'s (cont.)
AD 741 Op. Amp	41,43,44,57,58,
AD 518 Op. Amp	62,64,66,68,70
AD 521 Diff. Amp	42,56,61,63,65,67,69,

No.	DIODES (CR)
IN 914	1,2,3,4,5,6,7,8,9,15,16,17,18,
LED	10,11,12,13,14,

	TRANSISTORS (Q)
MPS6523	1,3,4,5,6,7,8,
MPS6521	2,
2N3904	9,

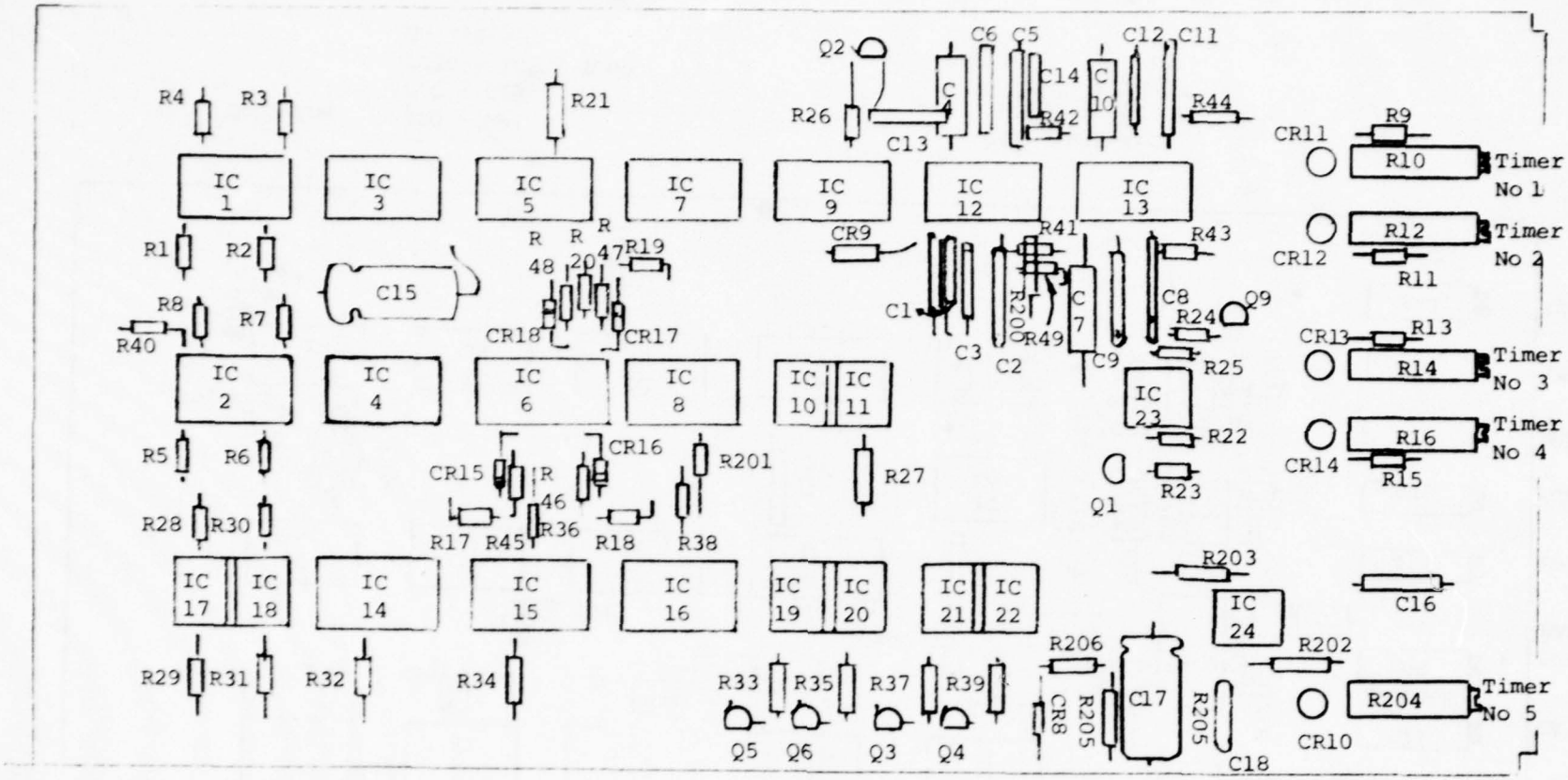

Contains R1 - R49, R200 - R206
C1 - C18
IC1 - CR18
CR8 - CR18
Q1 - Q6, Q9

Component Placement Board No. I

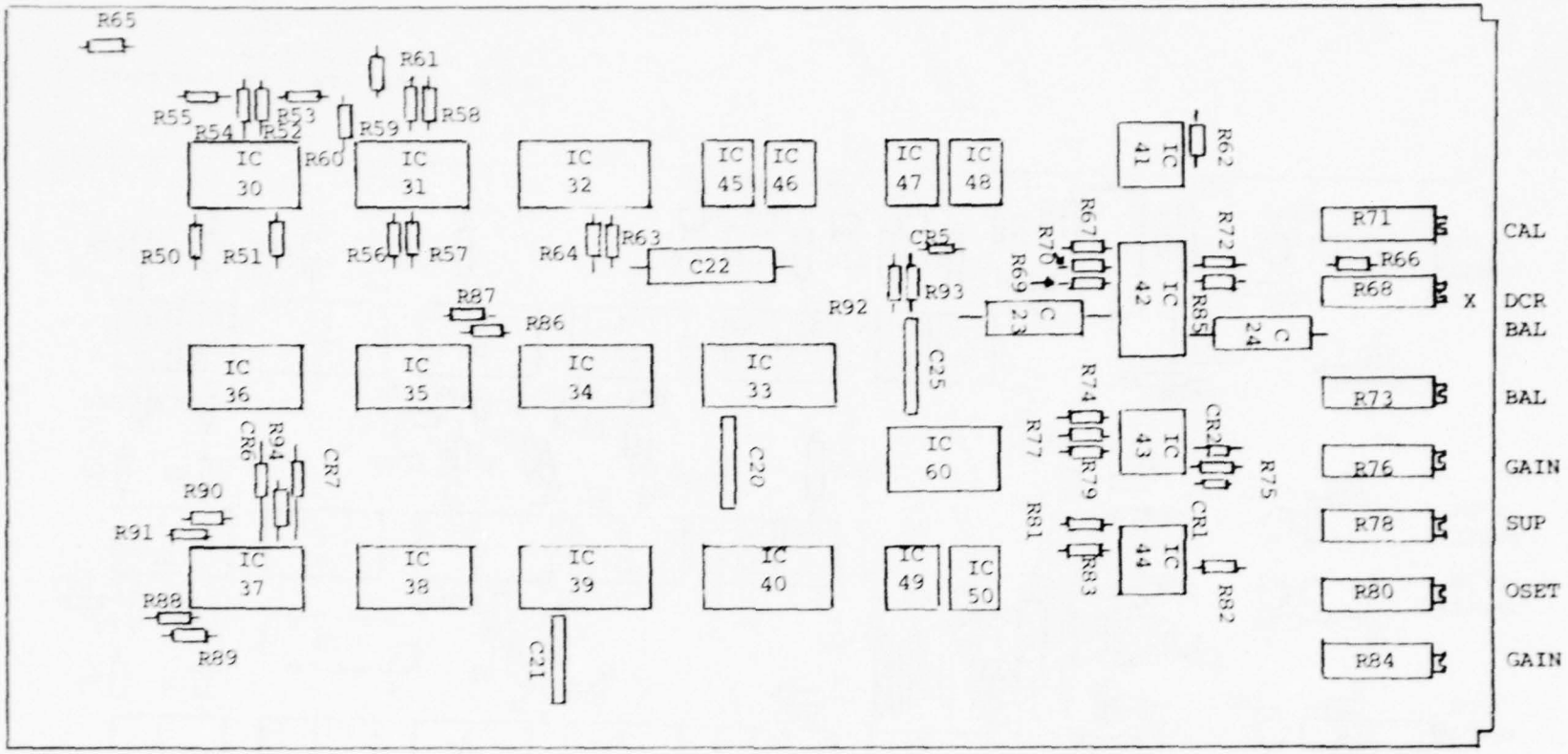

Contains R50 - R94
C20 - C25
IC30 - IC50, IC60
CR 1,2,5-7

Circuit Board
No. 2
6/13/77

Component Placement Board No. 2

Contains Resistors R101-R131 IC 51-59

Capacitors C31, C32 Q7,Q8

Diodes CR3, CR4

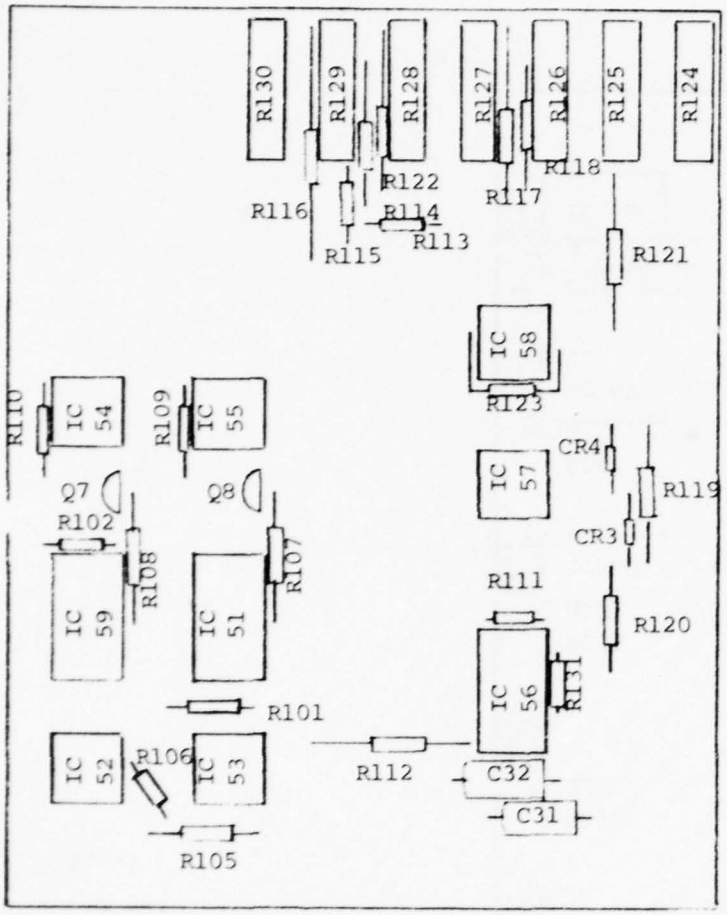

Board 3A

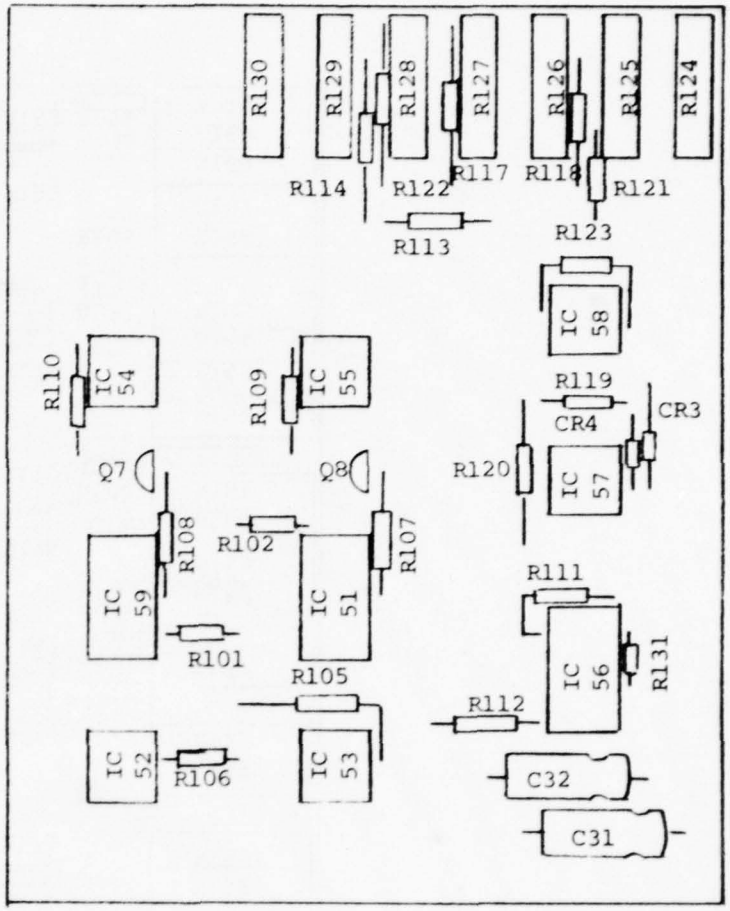

Board 3B & 3C

Slave Circuit Component Placement Board No. 3

Contains:

IC 61-70

R 140-194

C 33-34

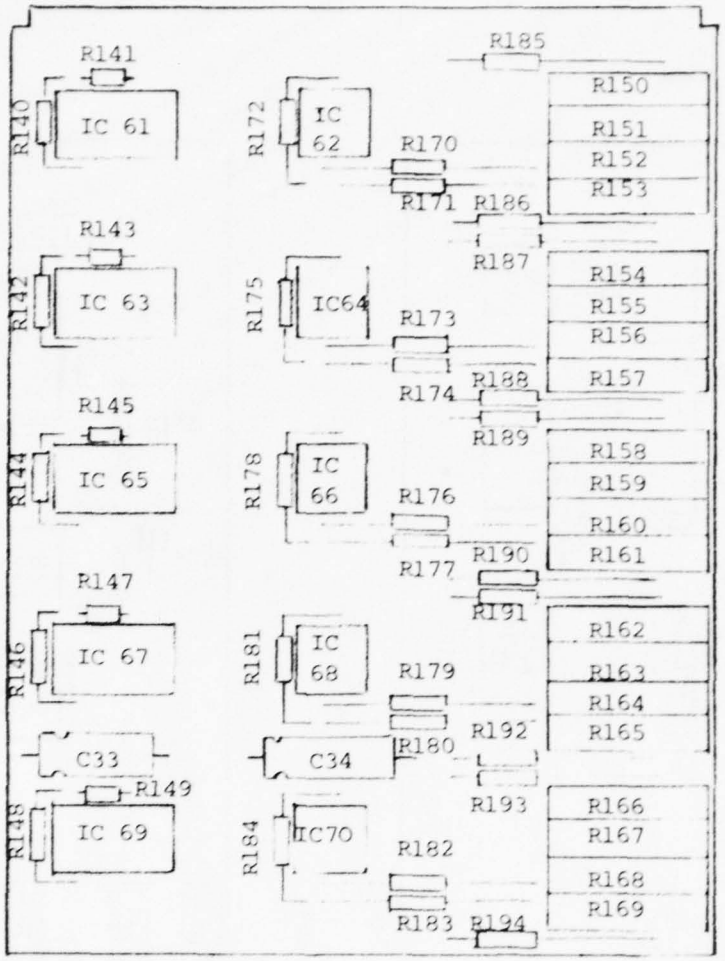

Component Placement 5 H Board

RECEPTACLE			
1	44	Pins	Board #1
2	72	Pins	Board #2
3	3	Pins	±12V Power in
4 5 6 7	5	Pins	±12V Power out
8	9	Pins	Main Controller ADV
9	5	Pins	Raw Pressure in
10 11 12	9	Pins	Slave ADV Signals & Press
13	5	Pins	Solenoid Position FDBK
14	9	Pins	Channel Signal
15	16	Pins	Data to Computer Terminal

A) Board #1 44 CONNECTORS

1 SW1	A +12
2 SW1	B Master S/V
3 SW2	C Master S/V
4 SW2	D Slave S/V
5 SW3	E Slave S/V
6 SW3	F Sol #1 Input
7 SW4	H Sol #1 Input
8 SW4	J Sol #2 Input
9 SW6	K Sol #2 Input
10 Clock Pulse	L Bleed Off Slave
11 SW7	M Bleed Off Slave
12	N Bleed on Slave
13 SW8	P Bleed on Slave
14	R Sol #1 out
15 CMIN	S Sol #1 out
16 CMAX	T Sol #2 out
17 Purge	U Sol #2 out
18 Read Pulse	V S/V ADV to BD #2
19 Read Flag	W B-Off to BD #2
20 Customer V^+	X B-On to BD #2
21 Customer 6ND	Y
22	Z GND

Connectors Board #2 Even

2	38 SW9 8
4 +12	40 SW9 9
6 GND	42 SW9 WIPER
8 GND	44 SW10 0

Even

10 -15	46 SW10 1
12	48 SW10 2
14 SW5	50 SW10 3
16 SW5	52 SW10 4
18 Read Pulse	54 SW10 WIPER
20 Clk.	56 SW11 WIPER
22 SW9 0	58 SW12 WIPER
24 SW9 1	60 SW13 0
26 SW9 2	62 SW13 2
28 SW9 3	64 SW13 4
30 SW9 4	66 SW13 6
32 SW9 5	68 SW13 8
34 SW9 6	70 S/V ADV Input
36 Sw9 7	72 Slave #2 S/V

Odd

1 Slave #2 S/V	37 Slave #3 B-on
3 Slave #3 S/V	39 CMIN
5 Slave #3 S/V	41 CMAX
7 SW13 WIPER	43 CHLX
9 SW14 0	45 "48"
11 SW14 1	47 Purge
13 SW14 2	49 Slave #3 B-on
15 Slave #2 B-off	51 Red
17 Slave #2 B-off	53 Calibr SW15
19 SW14 WIPER	55 Calibr SW15
21 Computer press sig	57 Yel.
23 Computer press sig	59 Bl.
25 B-off Input	61 Grn.
27 Slave #3 B-off	63 Shield
29 Slave #3 B-off	65 Suppress SW16
31 B-on Input	67 Suppress SW16
33 Slave #2 B-off	69 Strip Chart Signal Out Analog
35 Slave #2 B-off	71 Strip Chart Spin 2 Channel

Analog Pressure

MAIN BOX WIRING

FROM RECEPT.	PIN	TO RECEPT.	PIN
1	1	SW	1
1	2	SW	1
1	3	SW	2
1	4	SW	2
1	5	SW	3
1	6	SW	3
1	7	SW	4
1	8	SW	4
1	9	SW	6
1	10	Resistor	
1	11	SW	7
1	12	2	20
1	13	SW	8
1	14		
1	15	2	39
1	16	2	41
1	17	2	47
1	18	2	18
1	19	15	15
1	20	15	2 or 3 or 4
1	21	15	1
1	22		

FROM RECEPT.	PIN	TO RECEPT.	PIN
1	A	SW	17 V+
1	B	8	A
1	C	8	B
1	D	10	A
1	E	10	B
1	F	13	A
1	H	13	B
1	J	13	D
1	K	13	E
1	L	10	E
1	M	10	F
1	N	10	C
1	P	10	D
1	R	8	C
1	S	8	E
1	T	8	H
1	U	8	J
1	V	2	70
1	W	2	25
1	X	2	31
1	y		
1	Z	GND Pin B, recept. 3	

MAIN BOX WIRING

FROM	TO
2 | 1	11 | B
2 | 3	12 | A
2 | 5	12 | B
2 | 7	SW | 13 WIPER
2 | 9	SW | 14 "0"
2 | 11	SW | 14 1
2 | 13	SW | 14 2
2 | 15	11 | E
2 | 17	11 | F
2 | 19	SW | 14 WIPER
2 | 21	15 | 5
2 | 23	15 | 16 (GND)
2 | 25	1 | W
2 | 27	12 | E
2 | 29	12 | F
2 | 31	1 | X
2 | 33	11 | C
2 | 35	11 | D
2 | 37	12 | C
2 | 39	1 | 15
2 | 41	1 | 16
2 | 43	SW | 8
2 | 45	SW | 7
2 | 47	1 | 17 purge
2 | 49	12 | D
2 | 51	9 | A
2 | 53	SW | 9 Calibr.
2 | 55	SW | 9
2 | 57	9 | B
2 | 59	9 | D
2 | 61	9 | H
2 | 63	9 | E
2 | 65	SW | 10 suppress
2 | 67	SW | 10
2 | 69	Strip Chart Barrier 1
2 | 71	Strip Chart Barrier 2
2 | 2	
2 | 4	SW | 17 V+
2 | 6	GND Pin B, recept. 3
2 | 8	GND
2 | 10	SW | 17 V-
2 | 12	
2 | 14	SW | 5
2 | 16	SW | 5
2 | 18	1 | 18
2 | 20	1 | 12
2 | 22	SW | 9 "0"
2 | 24	SW | 9 1

MAIN BOX WIRING (cont.)

FROM		TO	
2	26	SW	9 2
2	28	SW	9 3
2	30	SW	9 4
2	32	SW	9 5
2	34	SW	9 6
2	36	SW	9"7"
2	38	SW	9"8"
2	40		9
2	42	SW	9 WIPER
2	44	SW	10 "0"
2	46		1
2	48		2
2	50		3
2	52		4
2	54	SW	10 WIPER
2	56	SW	11 WIPER
2	58	SW	12 WIPER
2	60	SW	13 "0"
2	62		2
2	64		4
2	66		6
2	68		"8"
2	70	1	V
2	72	11	A
3	A	4	D
3	B	4	A
3	C	4	E
4	A +12	4	B GND
4	B Odd	4	A GND
4	D -12V	5	D +12
4	E	5	E -12
4	H		
5	A	5	B
5	B	6	A
5	D	6	D
5	E	6	E
5	H		
6	A	6	B
6	B	7	A
6	D	7	D
6	E	7	E
6	H		
7	A	7	B
7	B	7	A
7	D	6	D
7	E	6	E
7	H		

MAIN BOX WIRING (cont.)

FROM			TO			
8	A	"5"	1	B	Master S/V	
8	B	"4"	1	C		
8	C	"5"	1	R	Sol #1	Master
8	D					
8	E	"4"	1	S		
8	F					
8	H	"5"	1	T	Sol #2	
8	J	"4"	1	W		
8	K					
9	A	Red	2	51		
9	B	Yl.	2	57		
9	D	Bl.	2	59		
9	E	SHLD	2	63		
9	H	Grn.	2	61		
10	A		1	D	S/V	
10	B		1	E		
10	C		1	N	Bleed on	
10	D		1	P		
10	E		1	L	Bleed off	
10	F		1	M		
10	H		15	6	Pressure to terminal	
10	J		GND			
10	K					
11	A		2	72	S/V	
11	B		2	1		
11	C		2	33	Bld on	
11	D		2	39		
11	E		2	15	Bld off	
11	F		2	17		
11	H		15	7	Pressure to terminal	
11	J		GND			
11	K					
12	A		2	3	S/V	
12	B		2	5		
12	C		2	37	Bld on	
12	D		2	49		
12	E		2	27	Bld off	
12	F		2	29		
12	H		15	8	Press. to terminal	
12	J		GND			
12	K					
13	A	V+	1	F	Sol #1	Pos FDBK
13	B		1	H		
13	D	V+	1	J	Sol #2	
13	E		1	K		
13	H					

MAIN BOX WIRING (cont.)

FROM			TO		
14	A	"1"	15	9	
14	B	2	15	10	
14	C	4	15	11	
14	D	8	15	12	
14	E	16	15	13	
14	F	32	15	14	
14	H	clock			
14	J	V+	15	2,3,4	
14	K		15	1	
15	1		14	K	Common
15	2		14	J	V+
15	3		15	2	
15	4		15	3	
15	5		2	21	Pressure Main
15	6		10	H	Slave 1
15	7		11	H	Slave 2
15	8		12	H	Slave 3
15	9	1K Resistor to 15-2	14	A	1
15	10	1K Resistor to 15-2	14	B	2
15	11	1K " " "	14	C	4
15	12	1K " " "	14	D	8
15	13	1K " " "	14	E	16
15	14	1K " " "	14	F	32
15	15	1K " " "	1	19	Read
15	16		GND		Signal GDN
SW	1		1	1	
SW	1		1	2	
SW	2		1	3	
SW	2		1	4	
SW	3		1	5	
SW	3		1	6	
SW	4		1	7	
SW	4		1	8	
SW	5		2	14	
SW	5		2	16	
SW	6		1	9	
SW	7		1	11	
SW	8		1	13	
SW	9	"0"	2	22	
		1	2	24	
		2	2	26	

MAIN BOX WIRING (cont.)

FROM			To	
	3		2	28
	4		2	30
	5		2	32
	6		2	34
	7		2	36
	8		2	38
	9		2	40
	WIPER		2	42
SW	10	"0"	2	44
		1	2	46
		2	2	48
		3	2	50
		4	2	52
		WIPER	2	54
SW	11	WIPER	2	56
SW	12	WIPER	2	58
SW	13	0	2	60
		2	2	62
		4	2	64
		6	2	66
		8	2	68
		WIPER	2	7
SW	14	"0"	2	9
		1	2	11
		2	2	13
		WIPER	2	19
SW	15		2	53
	15		2	55
SW	16		2	65
	16		2	67

SLAVE BOX

CABLE TERMINATIONS		
A	Raw press signal	5
C	Sol posit fdbk	5
D	CTLR AVD	9
F	AVD SIG FROM MSTR	9
H	± 12V	5

RECEPTABLES		
1	44 pins	Board #3
2	5 pins	± 12V
3	5 pins	SOL FDBK
4	5 pins	Raw Press.
5	9 pins	CTLR ADV
6	9 pins	ADV Sig from master

SLAVE BOX WIRING SHT 1 REVISED E-2

FROM			TO		
1	8		Suppress sw		
1	9		Suppress sw		
1	10		to barrier strip		
1	11		gnd to barrier strip		
1	12		6	H	
1	13		G	ND	
1	14		CAL SW		
1	15		CAL SW		
1	16				
1	17	SHLD	4	E	
1	18	GRN	4	H	
1	19	BL	4	D	
1	20	YEL	4	B	
1	21	RED	4	A	
1	22				
1	A		2	D	power swt
1	B		3	A	
1	C		3	D	
1	D		3	B	
1	E		3	E	
1	F		6	C	
1	H		6	E	
1	J				
1	K		5	C	
1	L		5	E	
1	M		5	H	
1	N		5	J	
1	R		Power SW-		
1	X		6	F	
1	Y		6	D	
1	Z		2	A	GND
2	A		1	Z	POWER
2	B		2	A	POWER

FROM				TO			
2	D			POWER SW + 12			power
2	E			POWER SW - 12			
2	H						
3	A	V+		1	B	Sol #1	SOL
3	B			1	D		
3	D	V+		1	C	Sol #2	FDBK
3	E			1	E		
3	H						
4	A	red		1	21		Row Press
4	B	YL		1	20		
4	D	BL		1	19		
4	E	SHLD		1	17	GND	
4	H	GRN		1	18		
							CONTROLLER ADV
5	A		"5"	6	A		SIV
5	B		4	6	B		
5	C		5	1	K		SOL #1
5	D						
5	E		4	1	L		
5	F						
5	H		5	1	M		SOL #2
5	J		4	1	N		
5	K						
6	A		5	5	A		SIV
6	B		4	5	B		
6	C		5	1	F		Bld ON
6	D		4	1	Y		
6	E		5	1	H		Bld OFF
6	F		4	1	X		
6	H			1	12		Press to Master box
6	J			GND			
6	K						

CONNECTORS - 5 HOLE

1	+12 IN	A	+12 IN
2	+12 XDCR	B	+12 XDCR
3		C	
4		D	
5	GND IN	E	GND IN
6	CAL SW 1	F	GND
7	CAL SW 2	H	P SIGNAL 1
8	3	J	2
9	4	K	3
10	5	L	4
11	XDCR 1	M	5
12		N	
13	XDCR 2	P	
14		R	
15	XDCR 3	S	
16		T	
17	XDCR 4	U	
18		V	
19	XDCR 5	W	
20		X	
21		Y	
22	-12 IN	Z	-12 IN

5-H BOX

CABLE TERMINATIONS

H ± 12V 5

J FROM XDRS 16

K TO COMPUTER 16

RECEPTACLES

1 44 PINS

2 5 PINS ± 12V

3 16 PINS FROM XDCRS

4 16 PINS TO COMPUTER

BARRIER STRIP

5-H BOX WIRING

FROM		TO
1	1	TO POWER SW +12V
1	2	3
1	3	------
1	4	------
1	5	GND
1	6	SW 1
1	7	SW 2
1	8	SW 3
1	9	SW 4
1	10	SW 5

FROM		TO		
1	11	3	4	also to cal SW 1
1	12	3	5	
1	13	3	7	also to SW 2
1	14	3	8	
1	15	3	9	also to SW 3
1	16	3	10	
1	17	3	12	also to SW 4
1	18	3	13	
1	19	3	15	also to SW 5
1	20	3	16	
1	21			
1	22	POWER SW -12V		
1	A	1	1	
1	B	3	1	
1	C			
1	D			
1	E	1	5 & 3/2	
1	F	4	GND	These signals
1	H	4	PI	also
1	J	4	II	go to
1	K	4	III	barrier
1	L	4	IV	strip
1	M	4	V	
1				
1				
1				
1				
J				
1				
1	Z	1	22 (GND)	
2	A	GND		
2	B	GND		
2	D	+ 12V	TO POWER SW	
2	E	- 12V	TO POWER SW	
3	1	1	B	+12V
3	2	1	E	GND
3	3			
3	4	1	11	XDCR I
3	5	1	12	
3	6	GND		(Jumpered)
3	7	1	13	XDCR II
3	8	1	14	XDCR
3	9	1	15	XDCR III
3	10	1	16	
3	11	GND		(Jumpered)
3	12	1	17	XDCR IV
3	13	1	18	
3	14	GND		(Jumpered)
3	15	1	19	XDCR V
3	16	1	20	

FROM	
4	1
4	2
4	3
4	4
4	5
4	6
4	7
4	8
4	9
4	10
4	11
4	12
4	13
4	14
4	15
4	16

TO		
1	H	P I
GND		
1	J	P II
GND		
1	K	P III
GND		
1	L	P IV
GND		
1	M	P V
GND		

TERMINAL BOX WIRING

1	1	Barrier strip	20	I
1	2		GND	
1	3		21	II
1	4		GND	
1	5		22	III
1	6		GND	
1	7		23	IV
1	8		GND	
1	9		24	V
1	10		25	GND
1	11			
1				
1	16			
2	1	Barrier strip	1	common
2	2		2	V+
2	3			
2	4			
2	5	Barrier strip	11	Press row
2	6		12	S1 1
2	7		13	2
2	8		14	3
2	9	Barrier strip	3	"1"
2	10		4	"2"
2	11		5	"4"
2	12		6	"8"
2	13	Barrier strip	7	"16"
2	14		8	"32"
2	15		9	"Read"
2	16		10	Signal Gnd

CABLES LIST

Quantity 3 SLAVE POWER CABLES

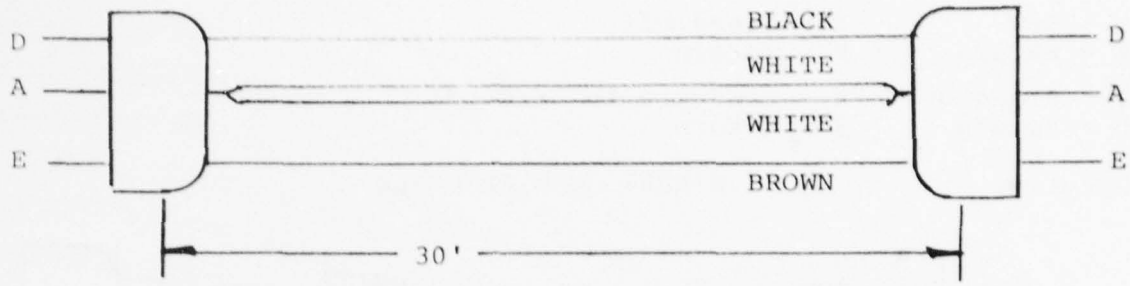

Cable ends terminated in AMPHENOL 5-pin plugs type no. 126-010.

Plugs are painted red and are connected between Master box slave power out and Slave box power in.

D - +12
A - Ground
E - -12

Quantity 3 MASTER/SLAVE CONTROL CABLES

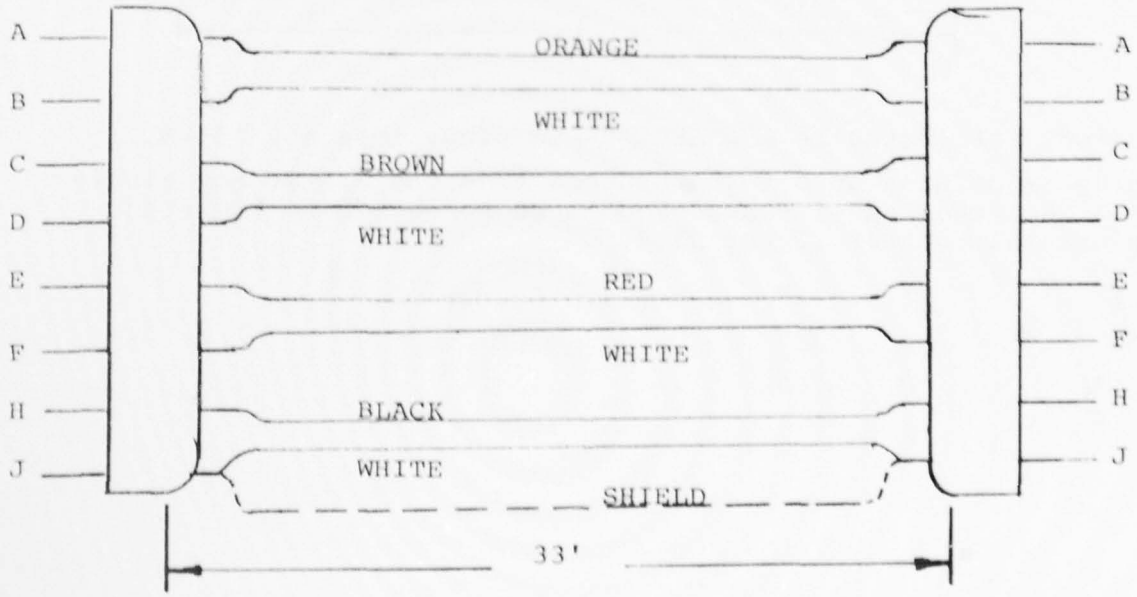

CABLE LIST (cont.)

Cable ends terminated in AMPHENOL 9-pin plugs type no. 126-012.

Plugs are painted blue and are connected between Master box slave control out and Slave box control in.

A - S/V
B - return
C - Bleed on
D - return
E - Bleed off
F - return
H - Pressure to terminal
J - return

Quantity 1 BINARY COUNTER CABLE

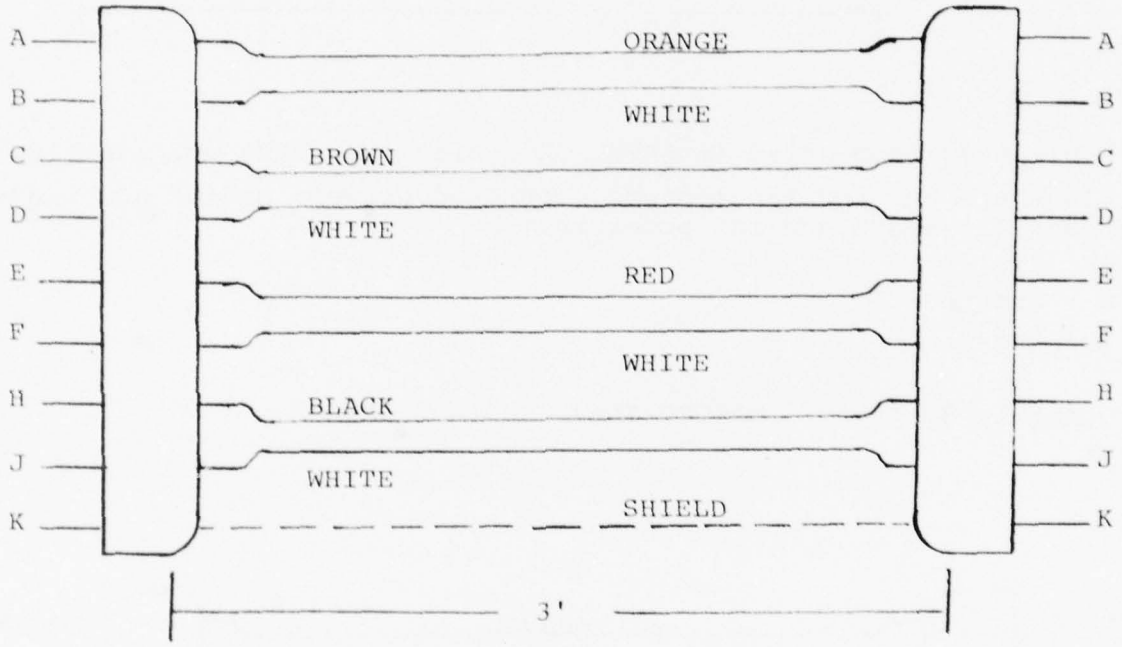

Cable ends terminated in AMPHENOL 9-pin plugs type no. 126-012.

One plug is painted gold to be plugged into the Master box binary input. The other end is unpainted to be connected to the scani-valve channel counter socket J104.

A - "1"
B - "2"
C - "4"
D - "8"
E - "16"
F - "32"
H - clock
J - V^+
K - Common

Quantity 2

CABLE LIST (cont.)

5 - H XDCR CABLE

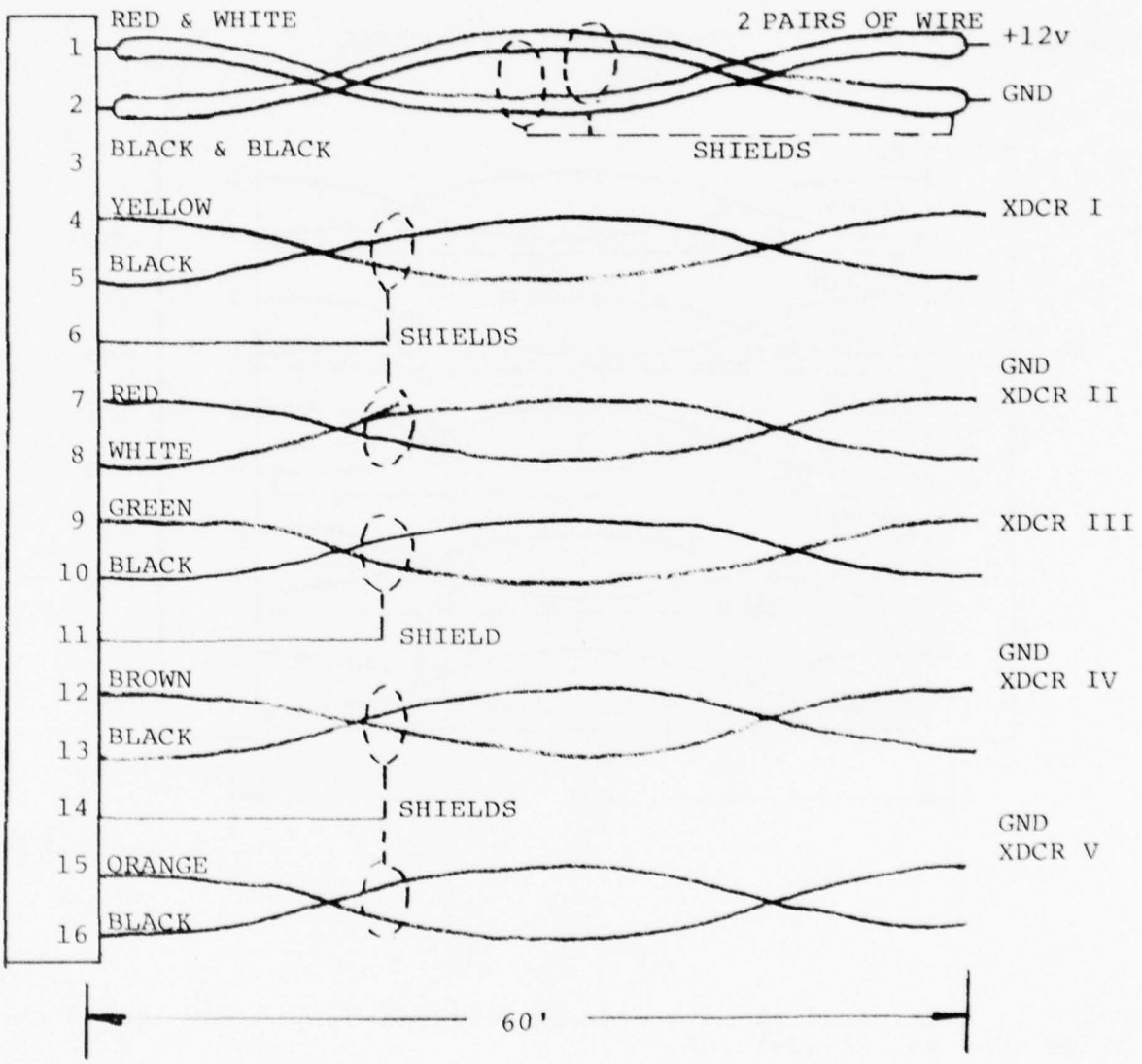

Cable in terminated at one end in an AMPHENOL 16-pin key locked shell plug type no. 26-4301-16P. This end is to be connected to 5H board box XDCR input.

The other end connects to 5 transducers.

CABLES LIST (cont.)

Quantity 1 TRANSDUCER OUTPUT CABLE

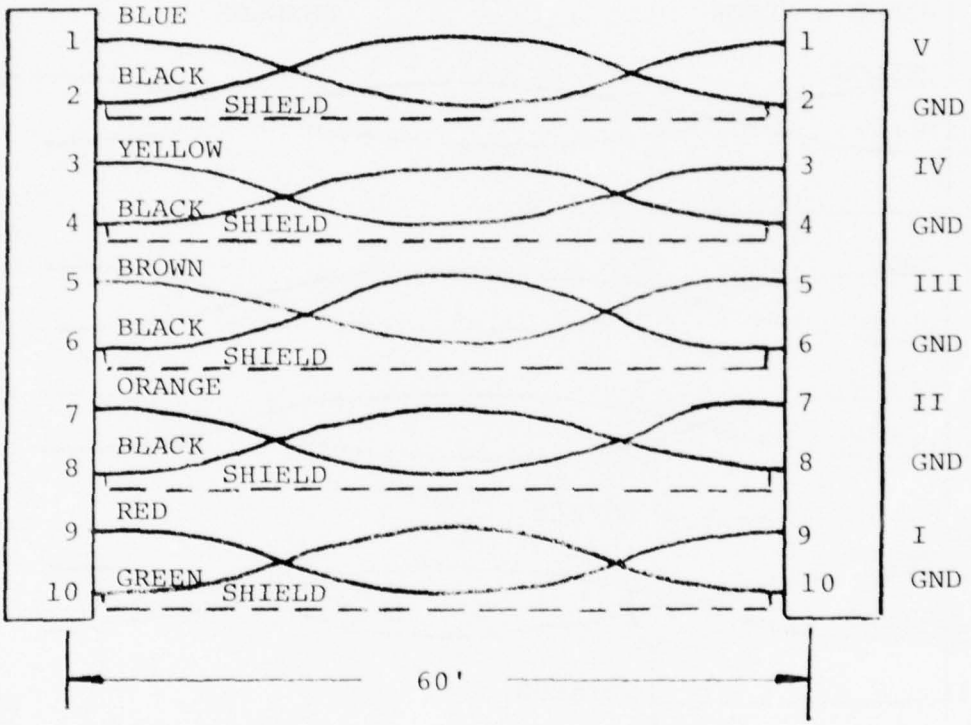

Cable is terminated at both ends in AMPHENOL 16-pin key locked shell plugs type no. 26-4301-16P.

Connection is to be made between the 5H board box XDCR output and the terminal box input.

CABLE LIST (cont.)

Quantity 4 CONTROLLER ADVANCE CABLES

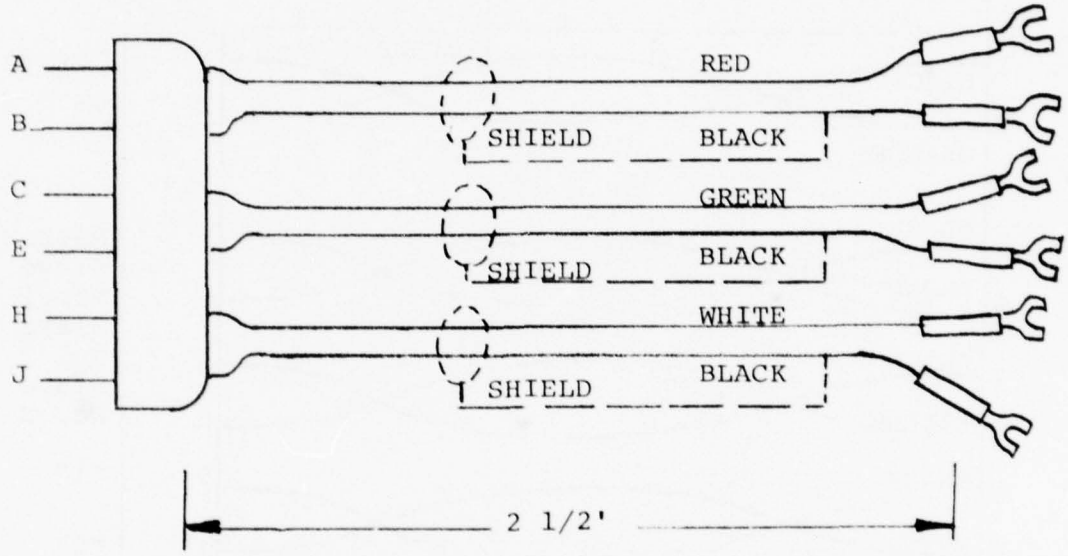

One end is terminated in an AMPHENOL 9-pin plug type no. 126-012. Plug is painted yellow to be connected to Master box control output.

The other end is terminated in spade lugs to be connected as follows:

Red-Black pair to S/V solenoid controller.
-red to pin 8, black to pin 5.

Green-Black pair to solenoid controller #1.
-green to pin 8, black to pin 5.

White-Black pair to solenoid controller #2.
-white to pin 8, black to pin 5.

CABLE LIST (cont.)

Quantity 1 MASTER TO TERMINAL CABLE

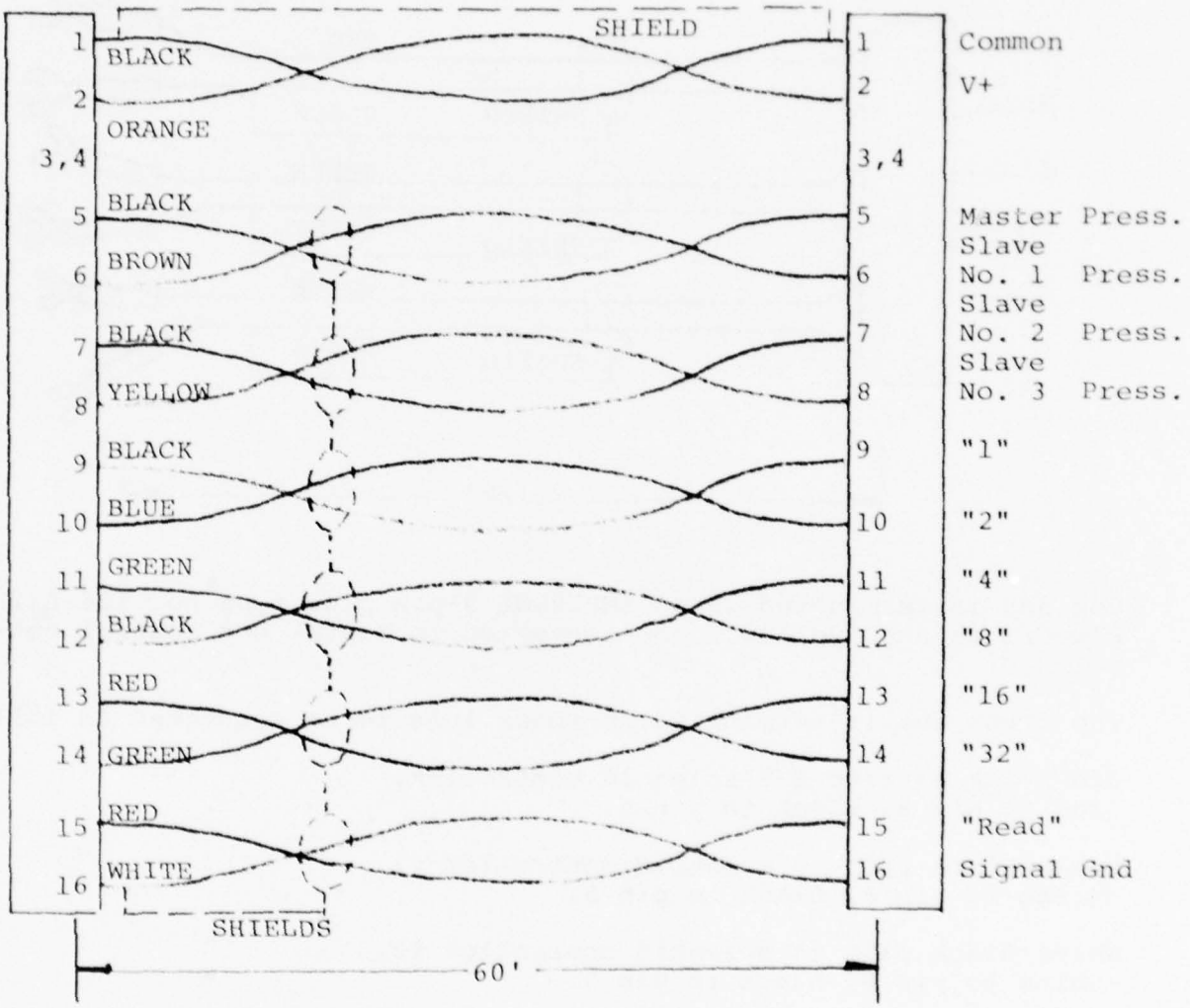

Both ends terminated in AMPHENOL 16-pin key locked shell plugs type no. 26-4501-16P.

The indicated end connects to the Master box output, the other end to the terminal box input.

CABLE LIST (cont.)

Quantity 4 SOLENOID POSITION FEEDBACK CABLE

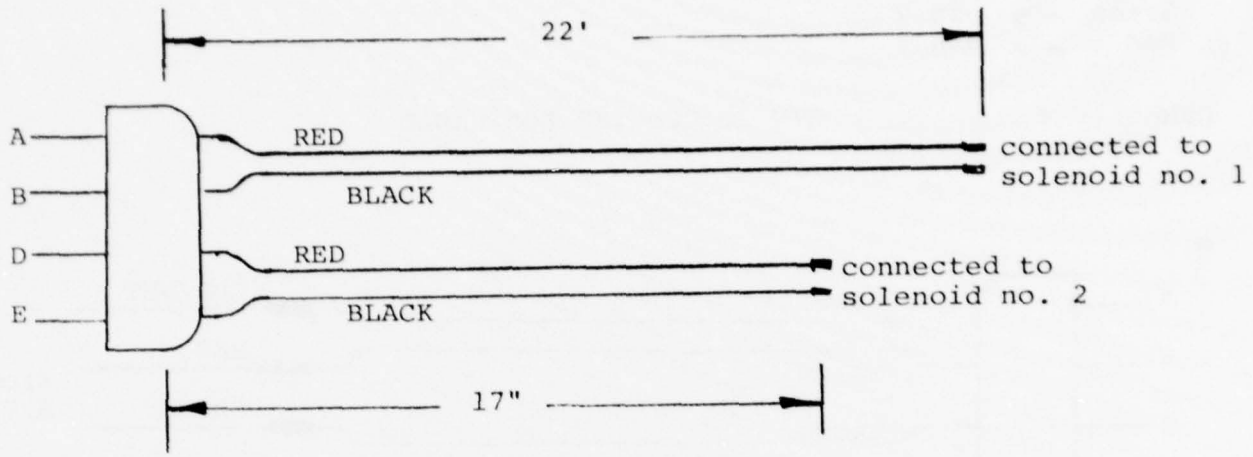

The free end of the cable is terminated in an AMPHENOL 5-pin plug type no. 126-010. The plug is painted black.

Connection is to be made from the solenoids to the solenoid position input socket on the corresponding Master or Slave box.

Quantity 4 S/V DRIVE CABLE

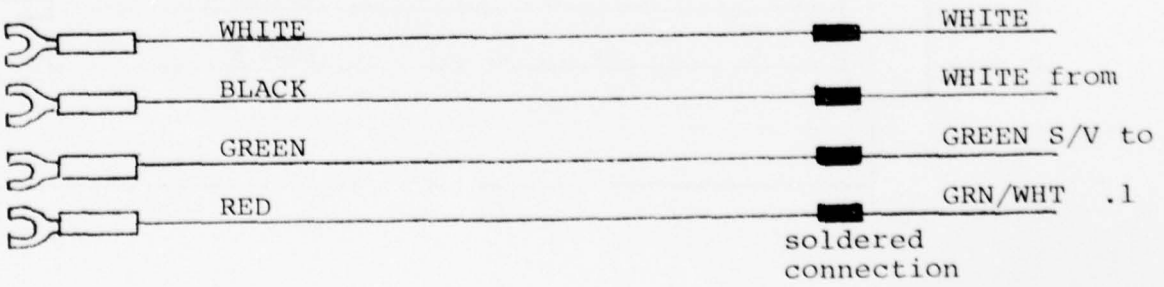

One end is connected to the scanivalve; the free end is terminated in spade lugs. This connected to the back of the scanivalve's

solenoid controller as follows:

White → pin 3
Black → pin 4
Green → pin 7
Red → pin 5

Quantity 4 S/V TO COUNTER BOX CABLE

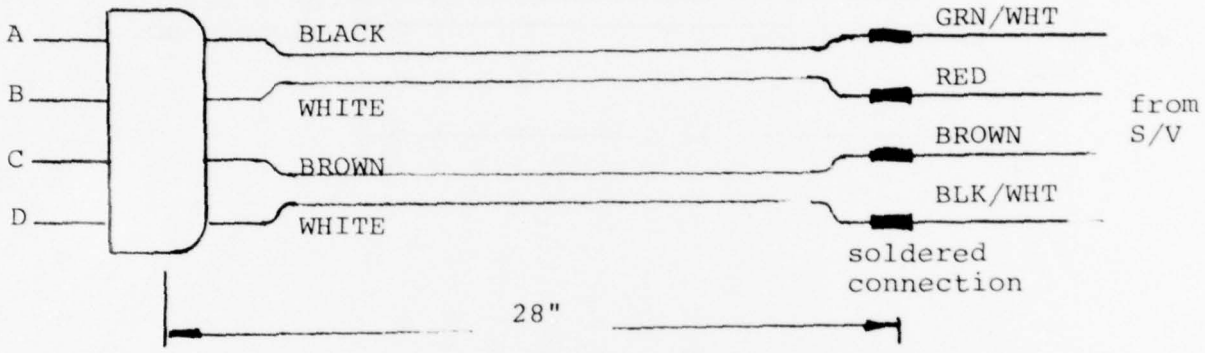

One end is connected to the scanivalve. The free end is terminated in an AMPHENOL 5-pin plug type no. 126-010. The plug is unpainted and makes connection to the back of the scanivalue channel counter box socket J102.

Quantity 1 MAIN POWER CABLE

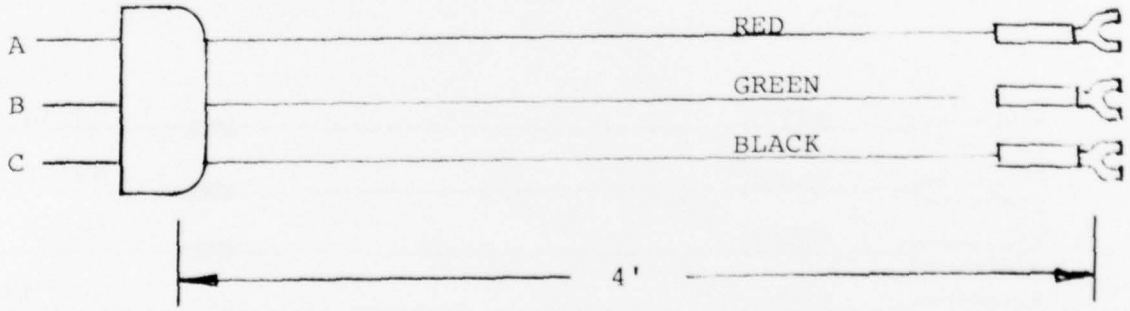

One end is terminated in spade lugs to the connected to the power supply as follows:

Red → +12v
Green → Gnd
Black → -12v

CABLE LIST (cont.)

The other end is terminated in an AMPHENOL 3-pin plug type MS3102A-145, to be plugged into the side of the Master box in the main power in socket.

Quantity 8 SOLENOID CONTROL CABLES

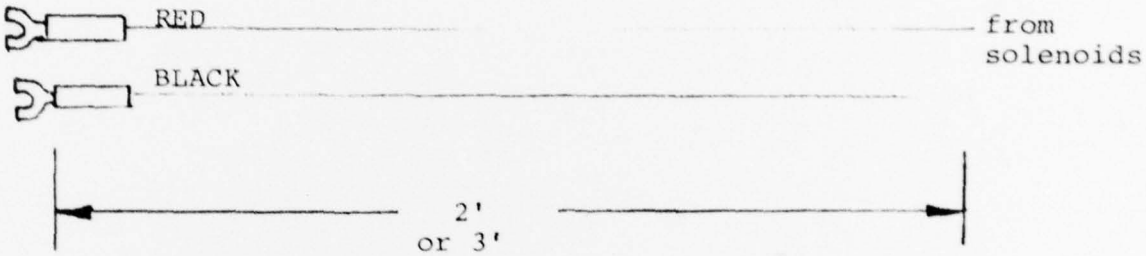

One end of each cable is connected to the solenoids controlling the bleed air. The 4 cables to the no. 1 solenoids are 2' long; the 4 cables to the no. 2 solenoids are 3' long.

The other end is terminated in spade lugs and is connected to the back of the solenoid controller as follow:

RED on pin 3
BLACK on pin 4

Quantity 4 S/V OUTPUT CABLES

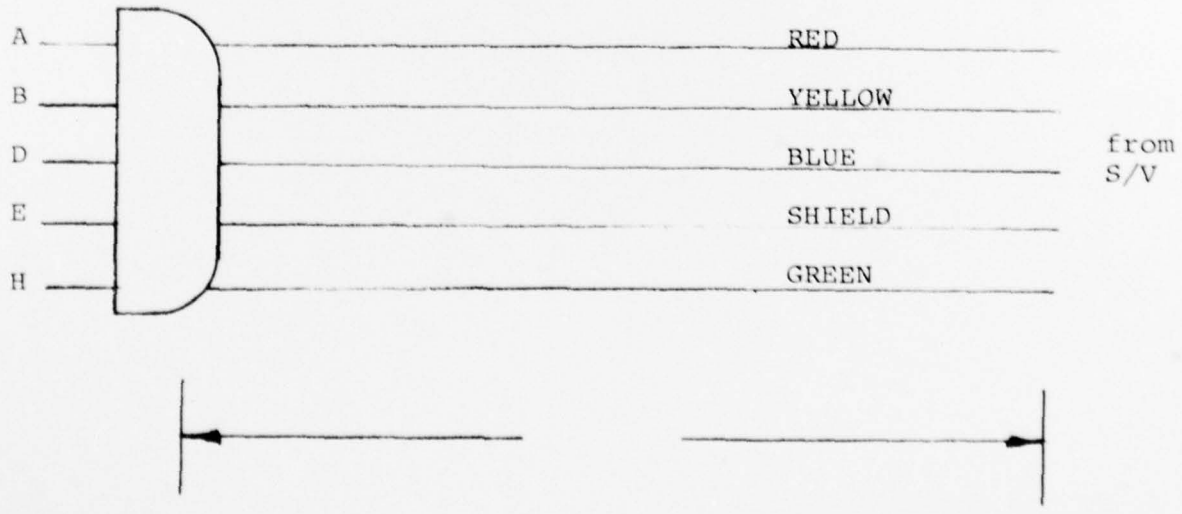

One end of the cable is connected to the pressure measuring transducer

internal to each scanivalve. The other end is terminated in an AMPHENOL 5-pin plug type no. 126-010 and is painted green. The cable is orange.

Connection is made to the Master box raw pressure input socket.

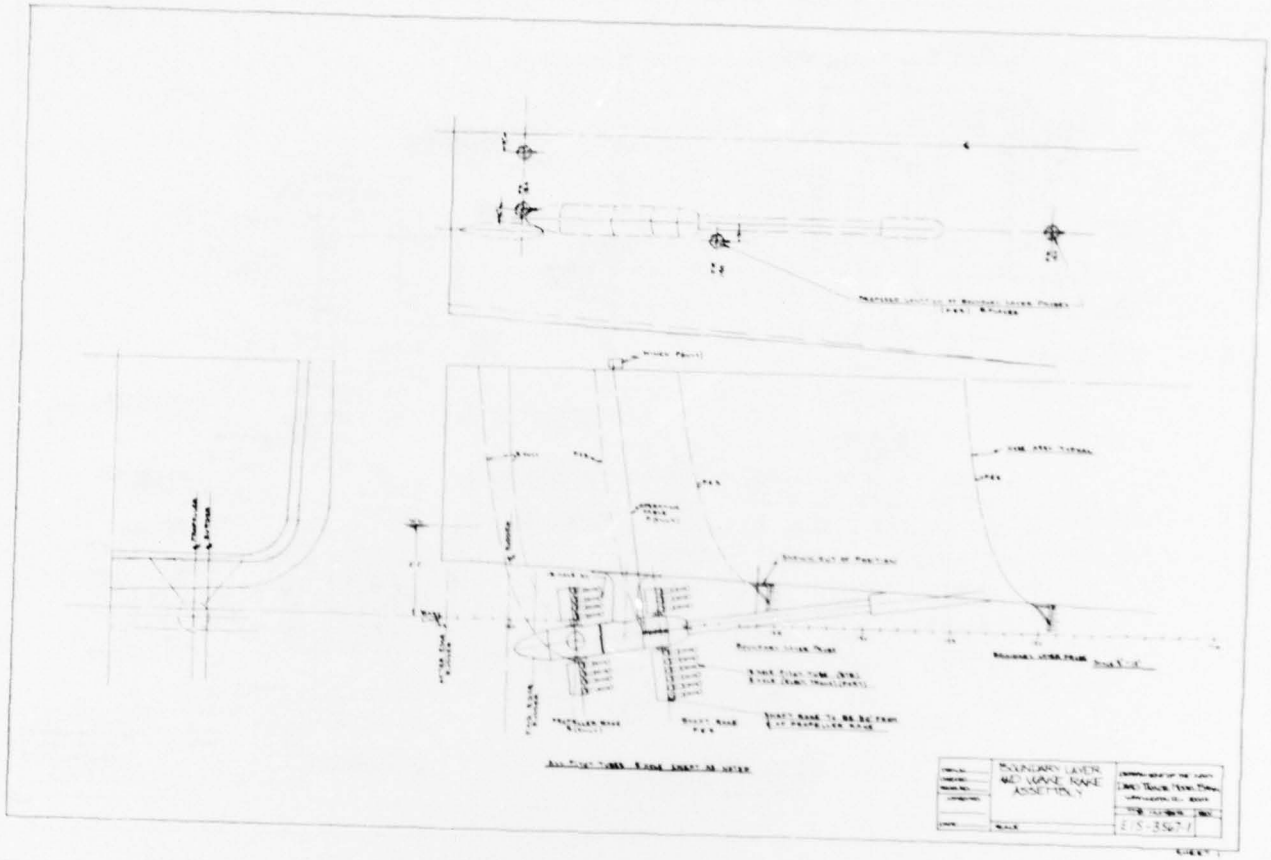
BOUNDARY LAYER
RAKE ASSEMBLY
E-5-3567

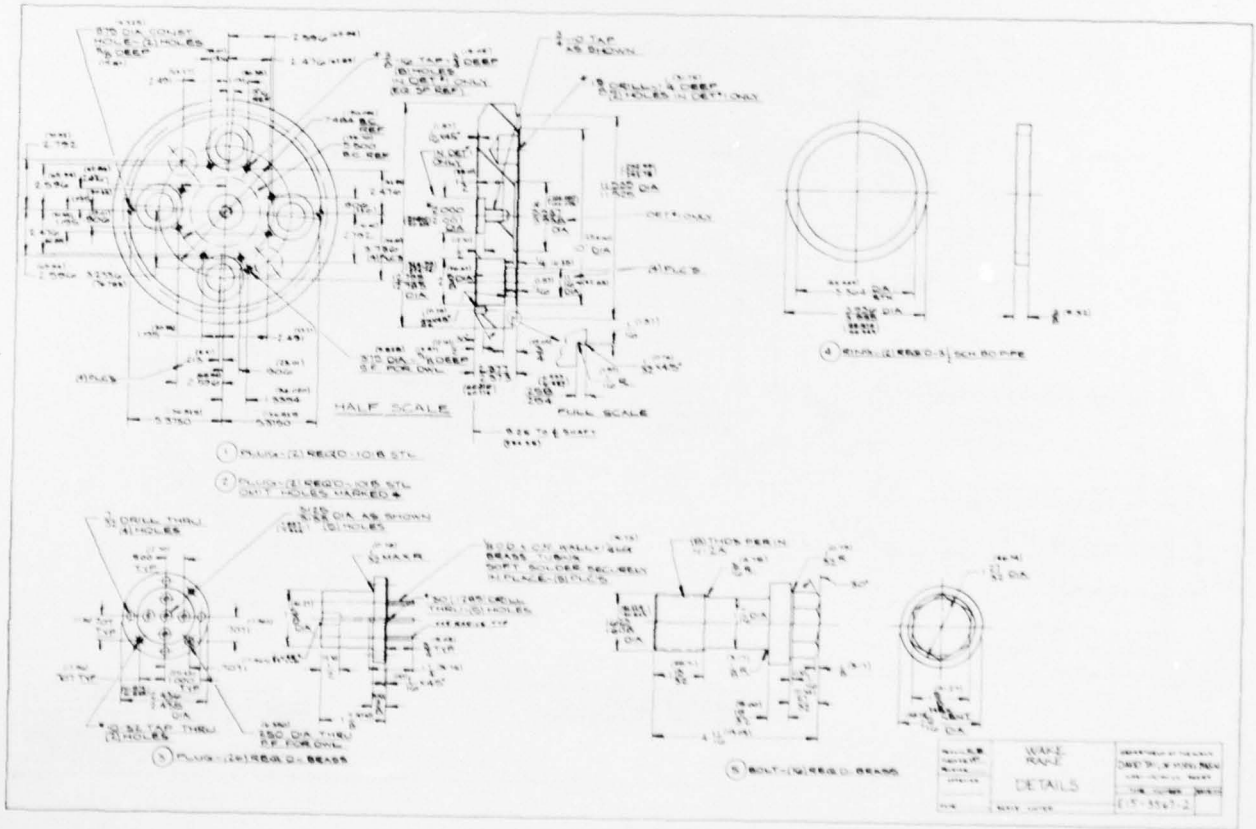
HALF SCALE
FULL SCALE
WAKE RAKE
DETAILS
E-5-3567-2

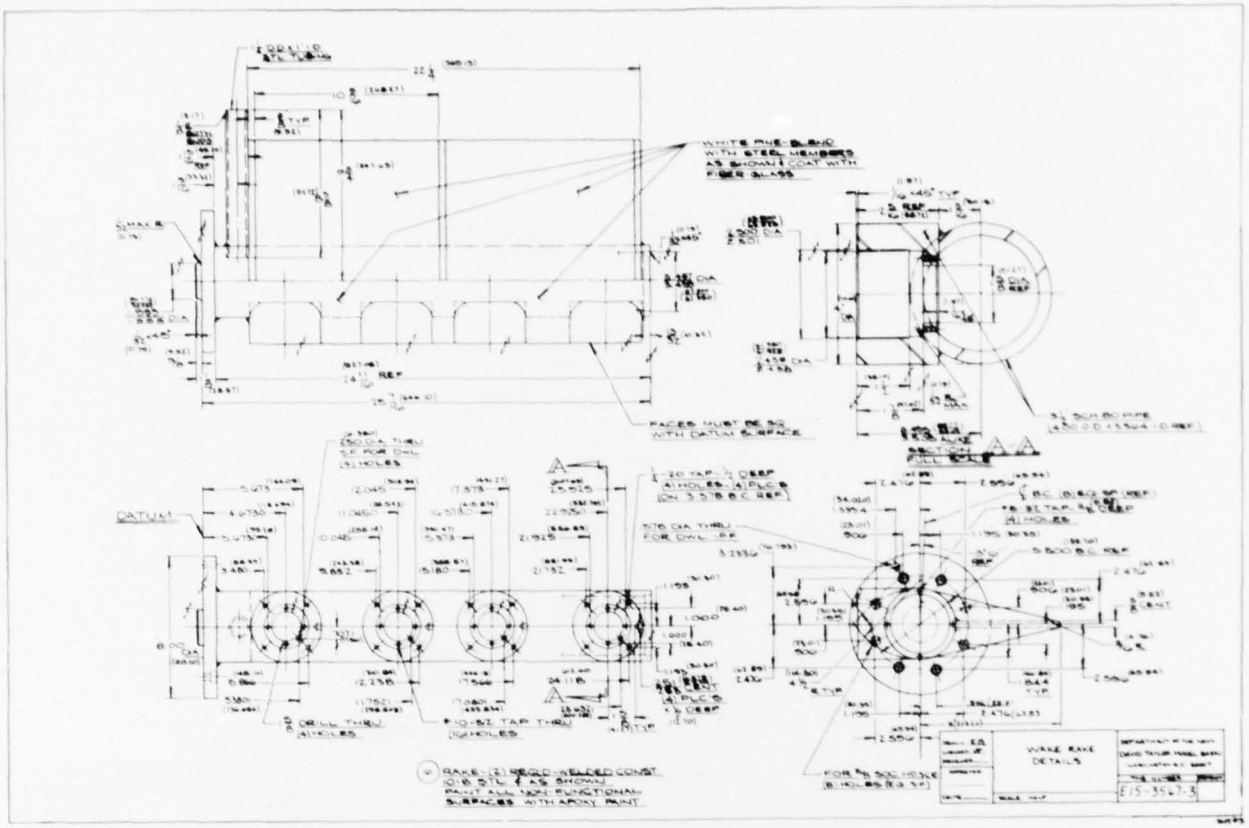
WHITE PINE-BLEND WITH STEEL MEMBERS AS SHOWN & COAT WITH FIBER GLASS
FACES MUST BE SQ WITH DATUM SURFACE
DATUM
WAKE RAKE DETAILS
E15-3567-3

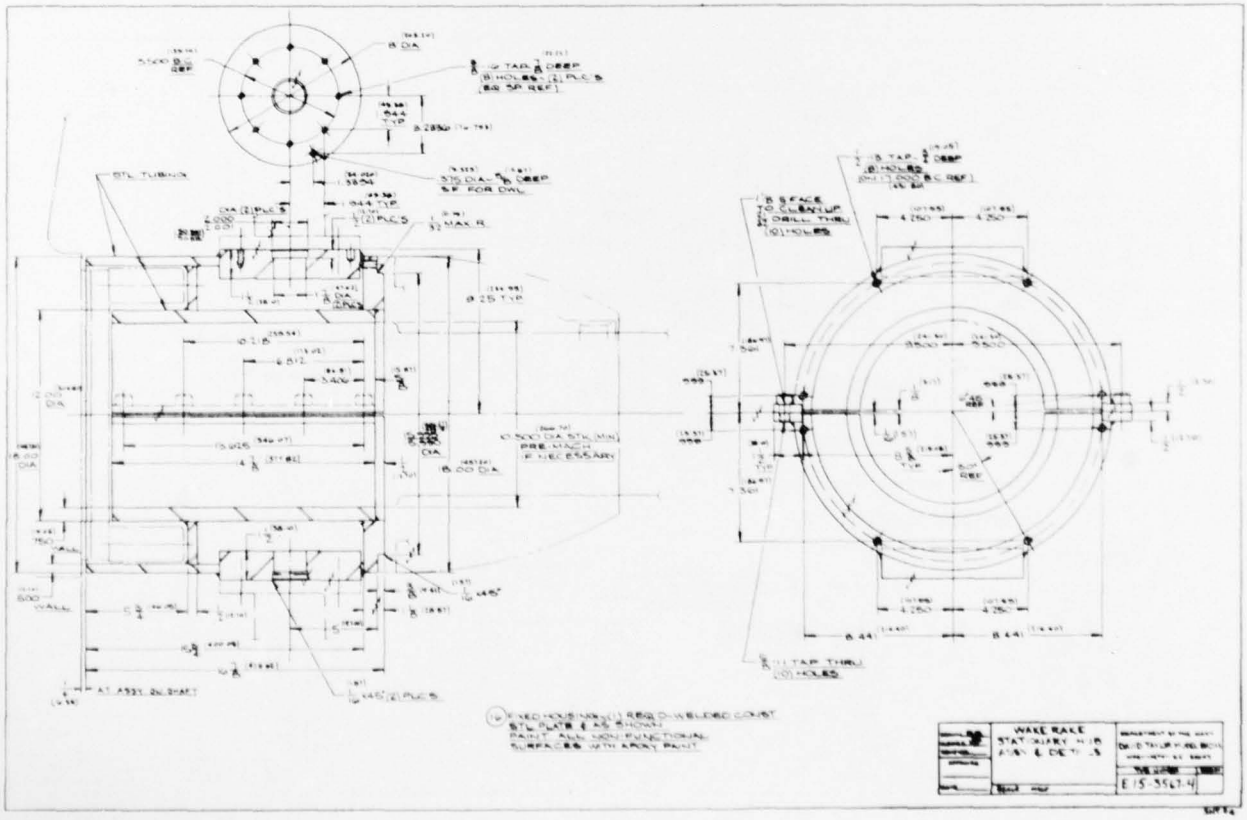
STL TUBING
WAKE RAKE
E15-3567-4

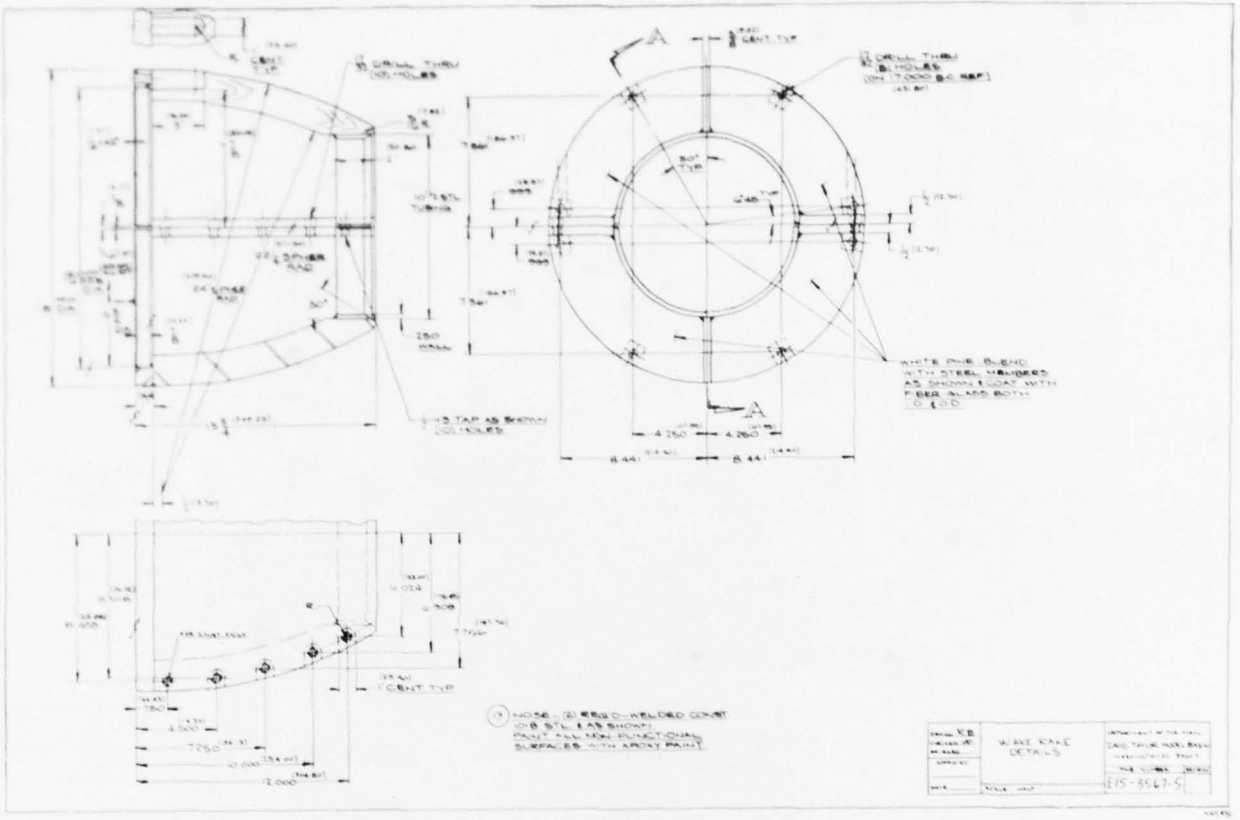
WAKE RAKE DETAILS
E15-3567-5

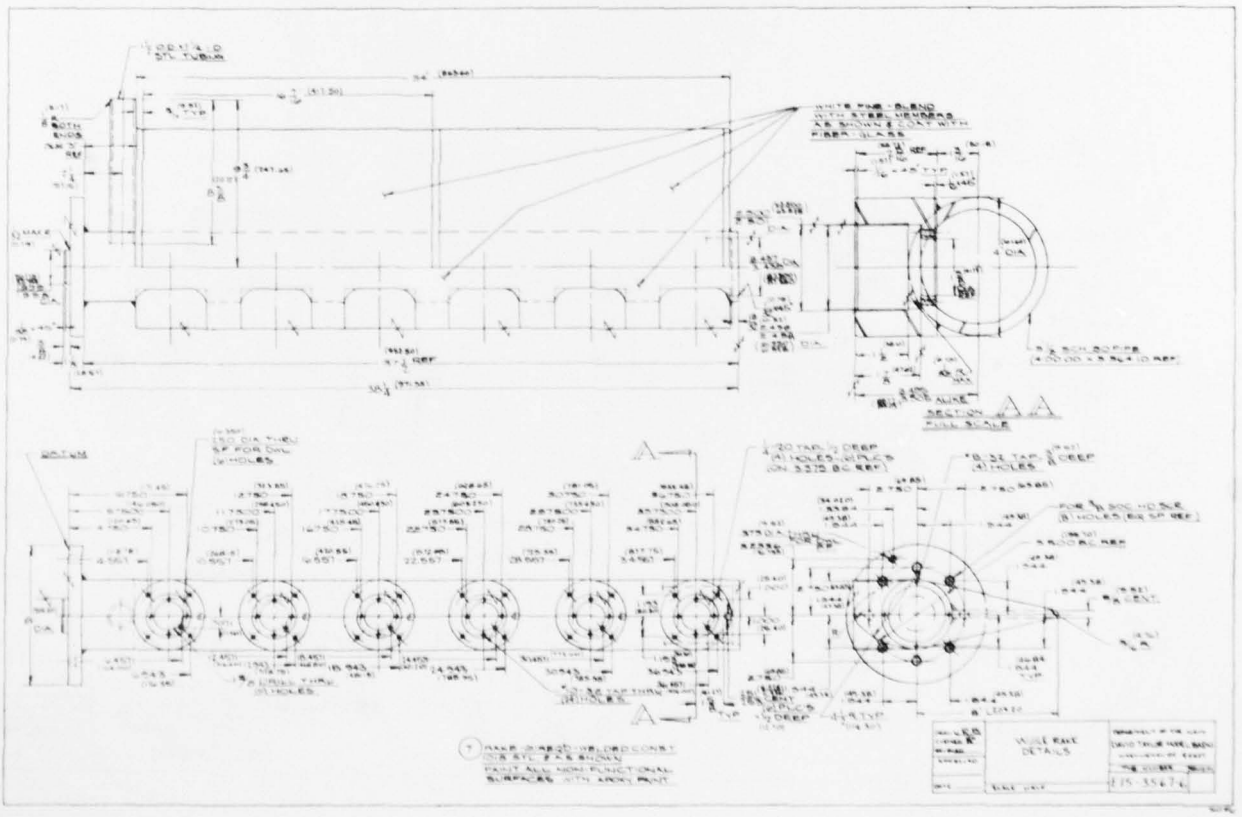
WAKE RAKE DETAILS
E15-3567-6

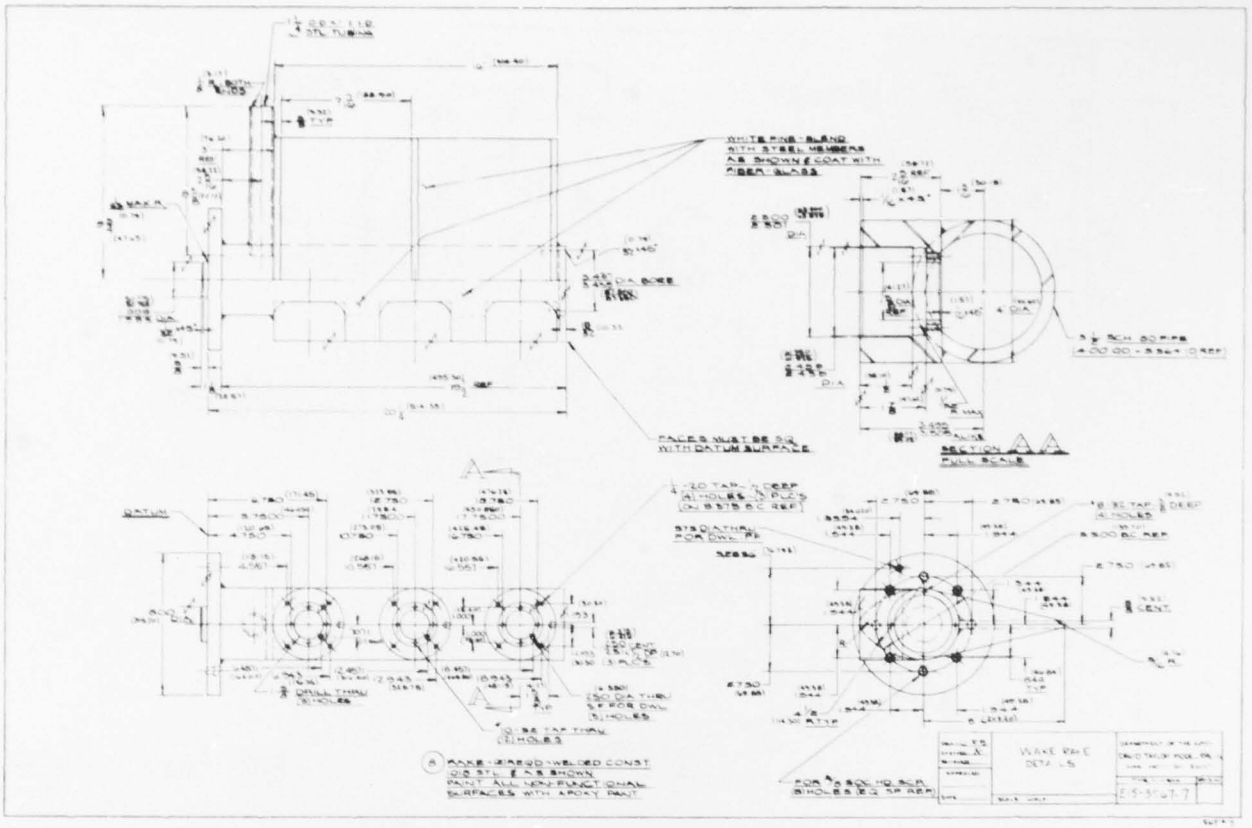
WAKE RAKE
DETAILS
E15-5567-7

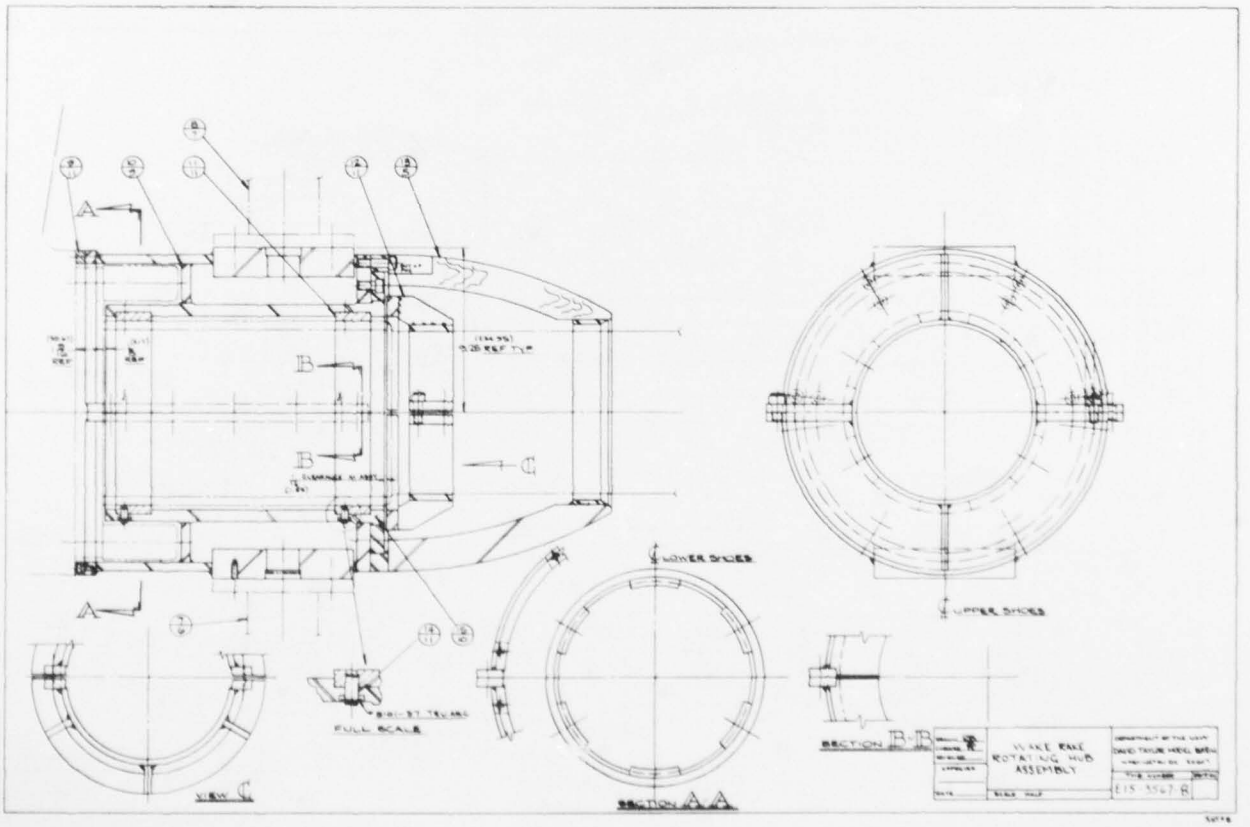
WAKE RAKE
ROTATING HUB
ASSEMBLY
E15-5567-8

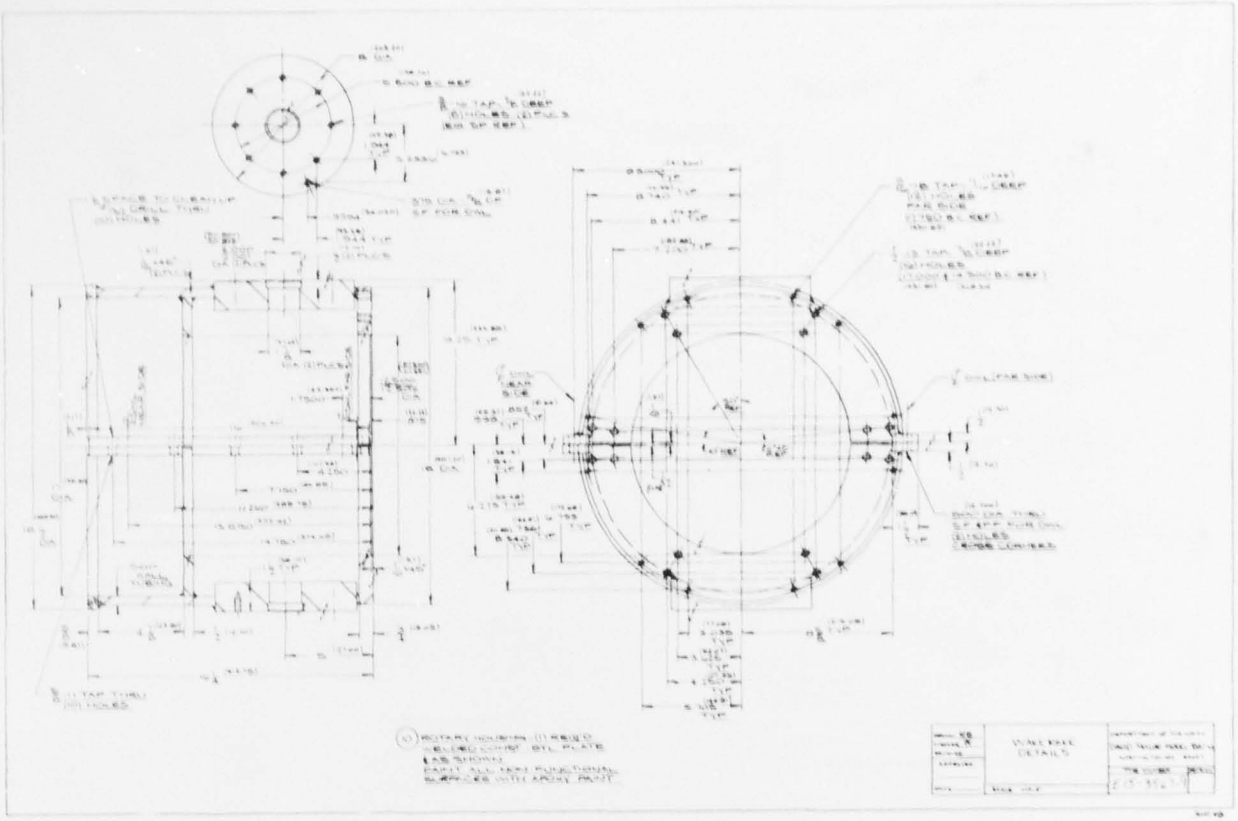

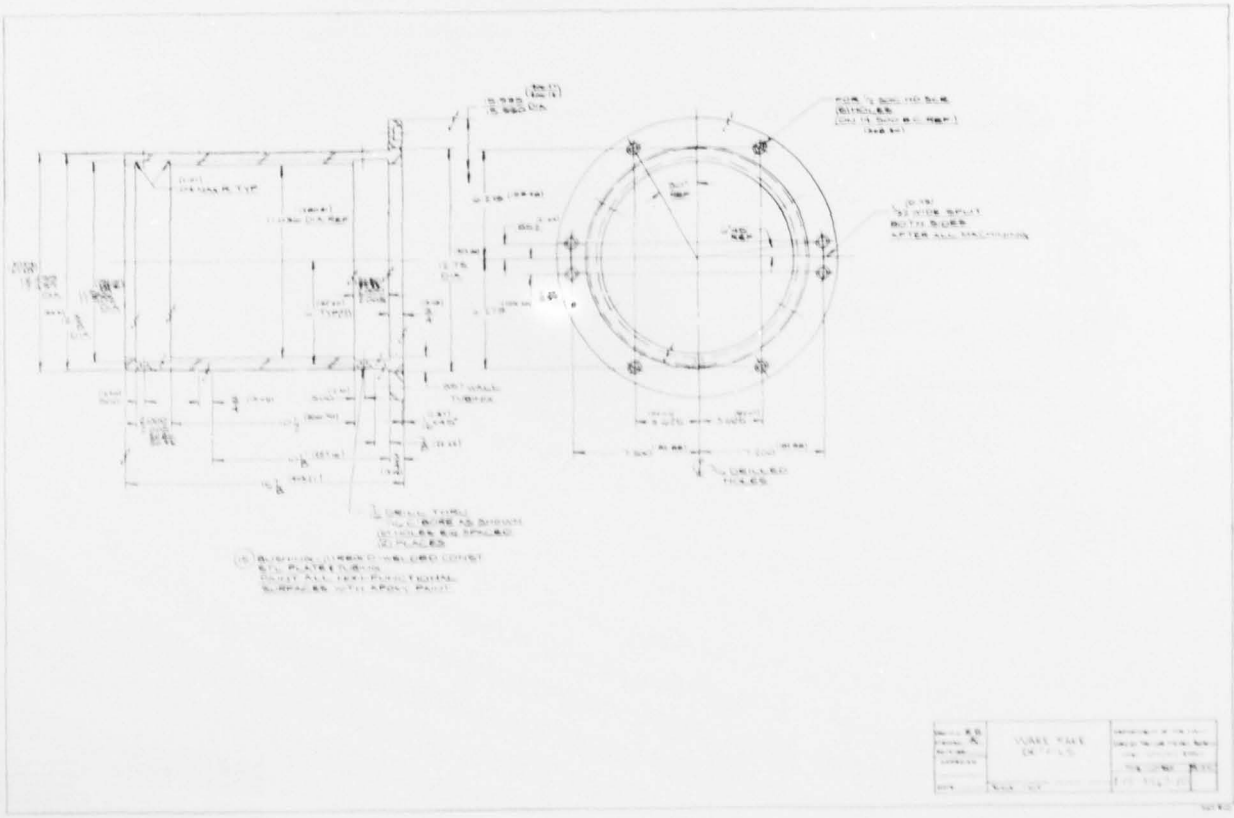

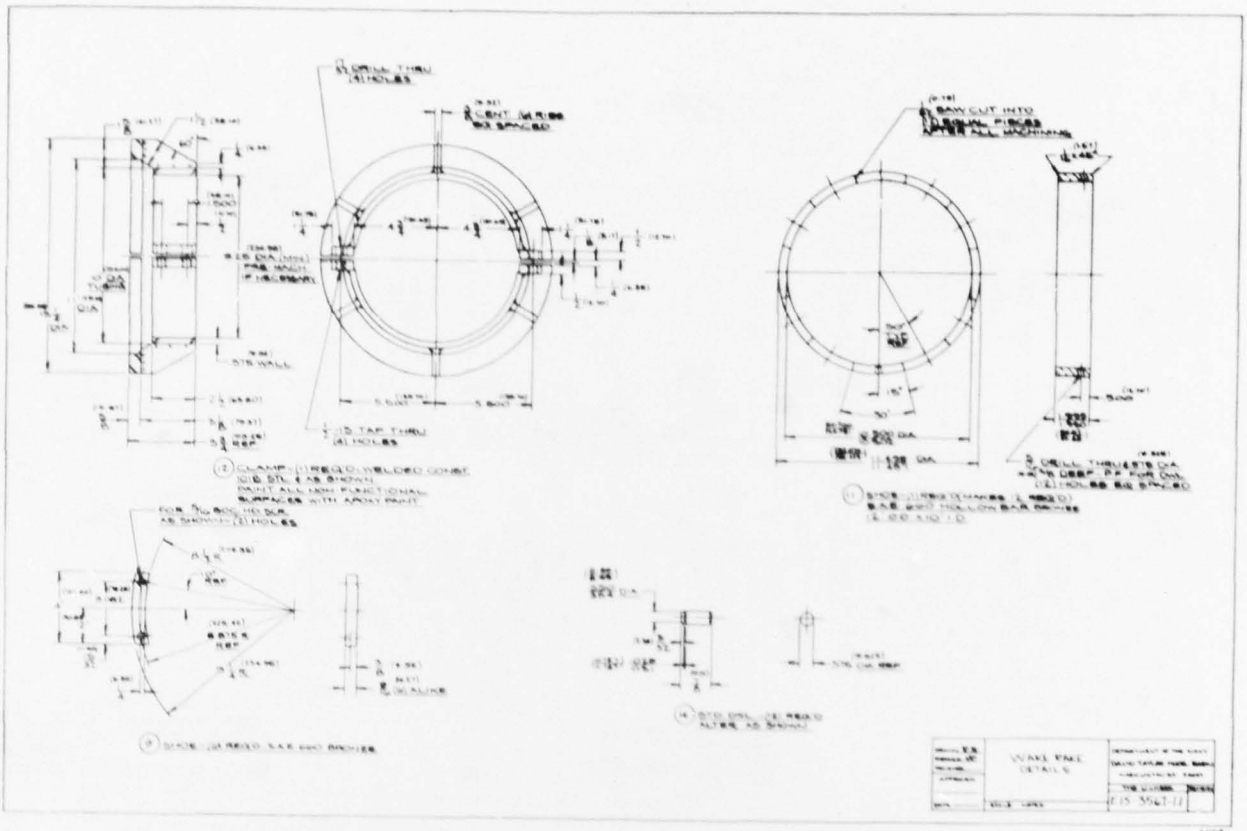
WAKE RAKE
DETAILS
E15-3567-11

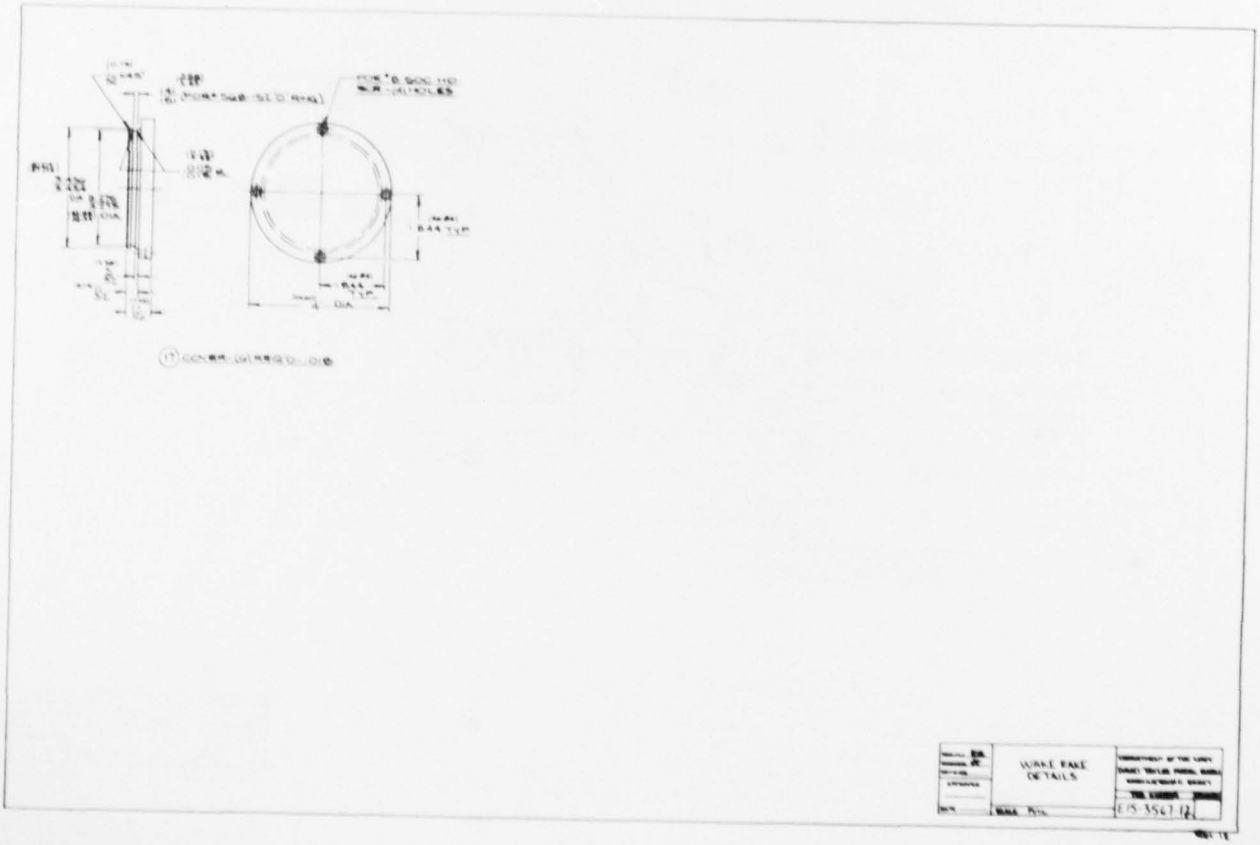
WAKE RAKE
DETAILS
E15-3567-12

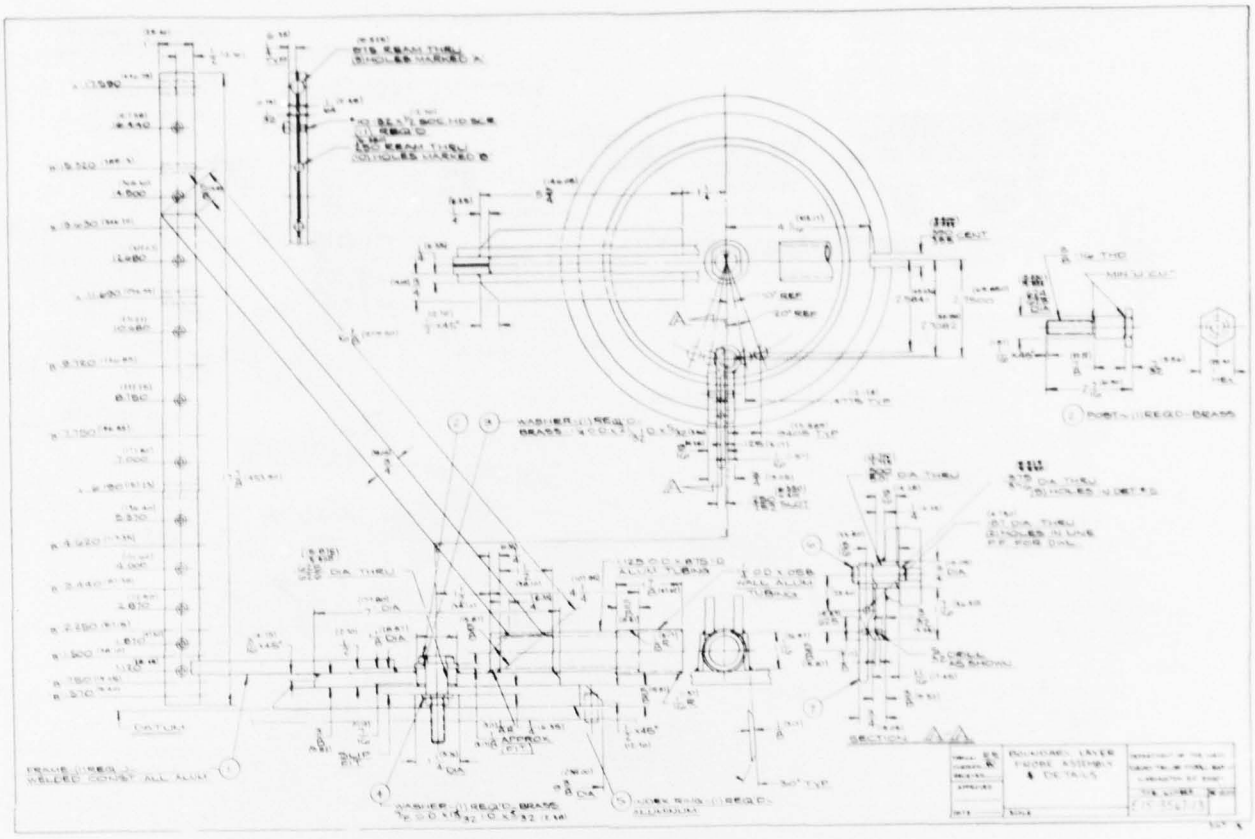

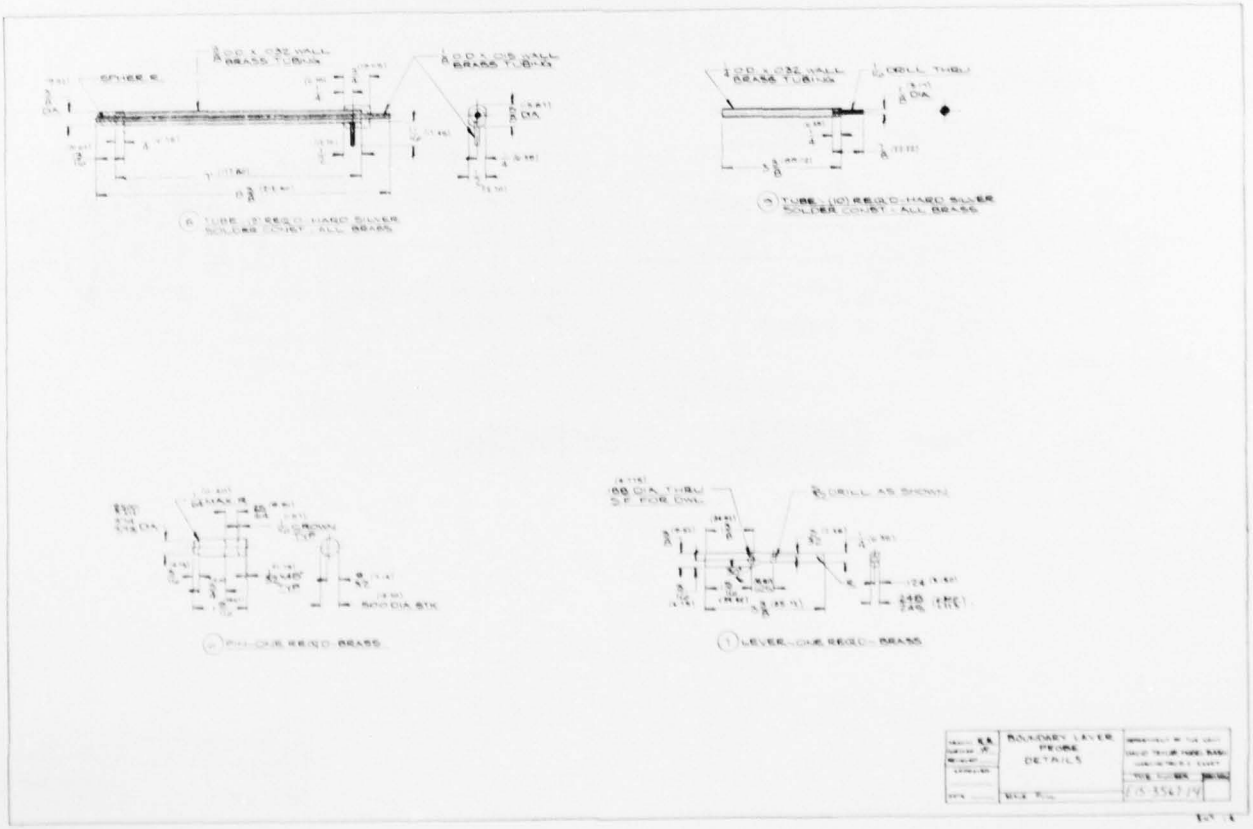

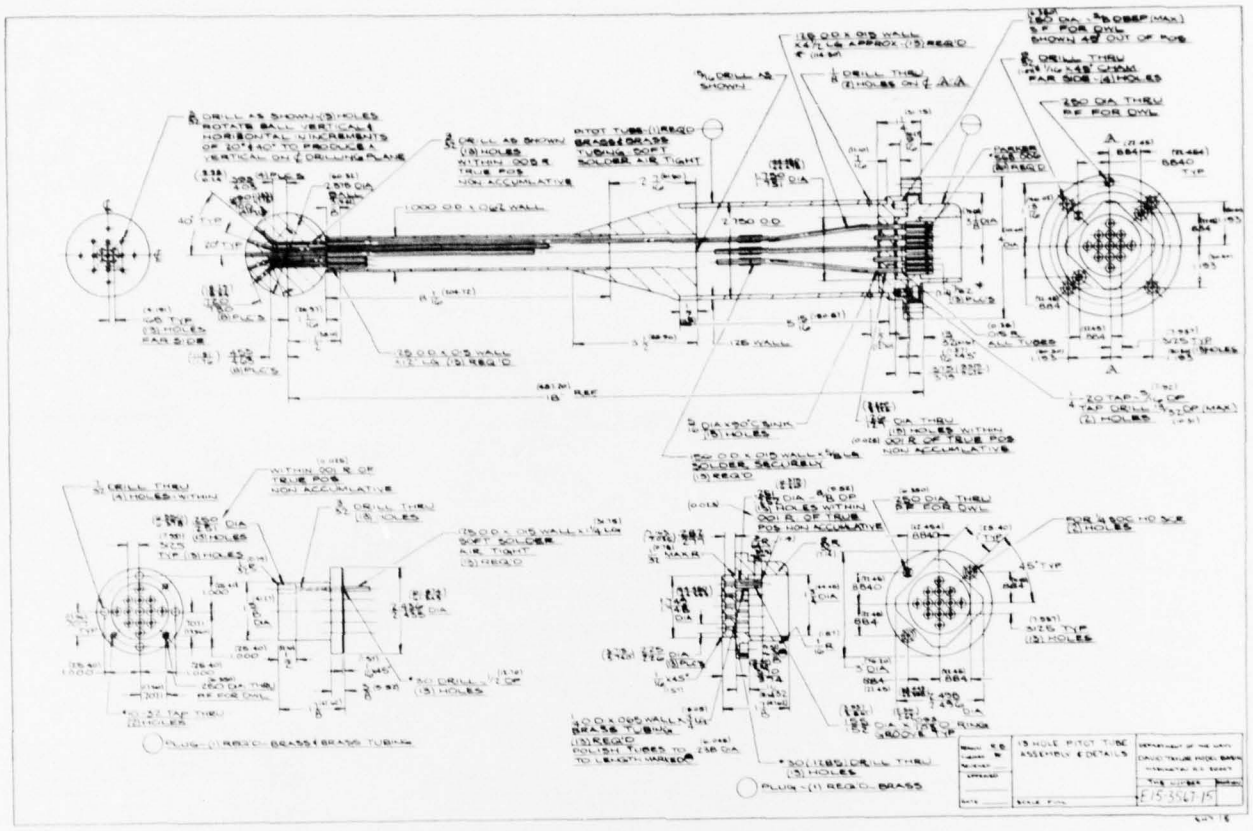
5 HOLE PITOT TUBE ASSEMBLY & DETAILS
E15-3567-15

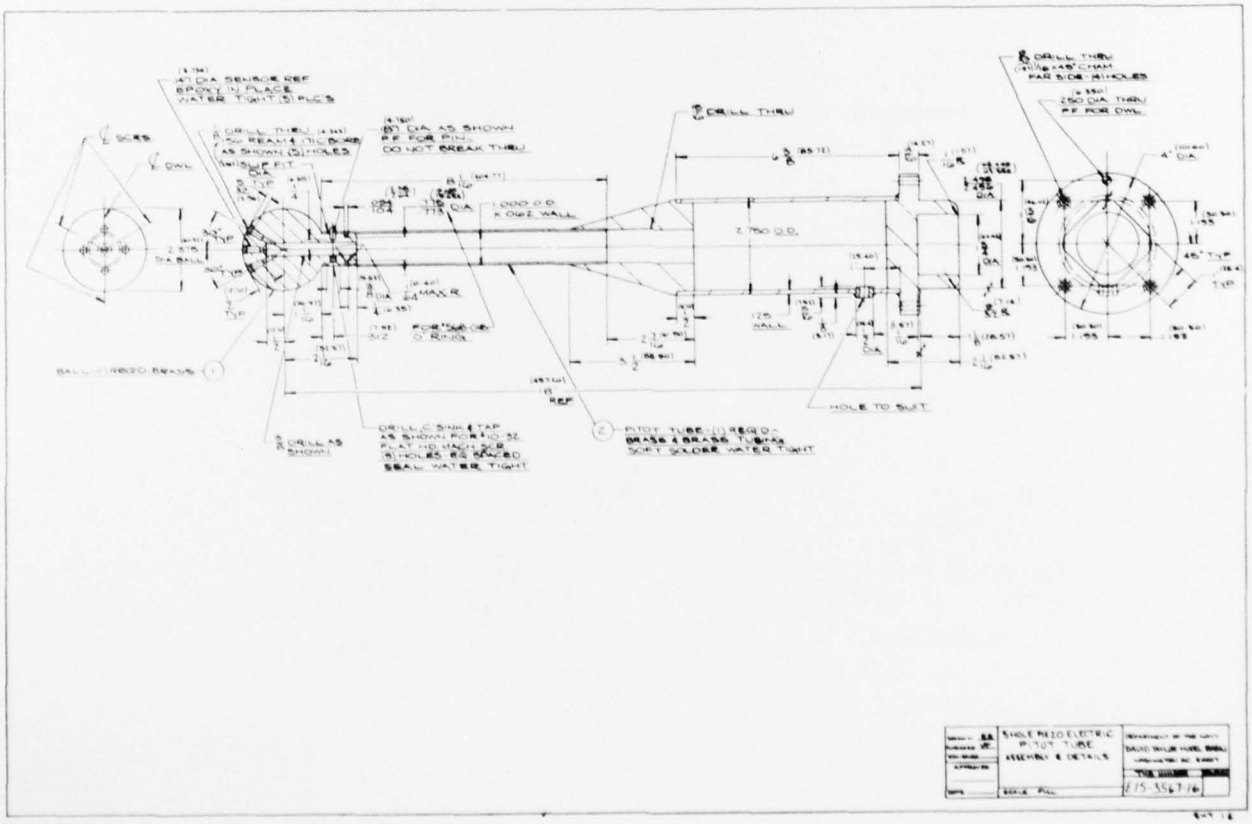
5 HOLE RIGID ELECTRIC PITOT TUBE ASSEMBLY & DETAILS
E15-3567-16

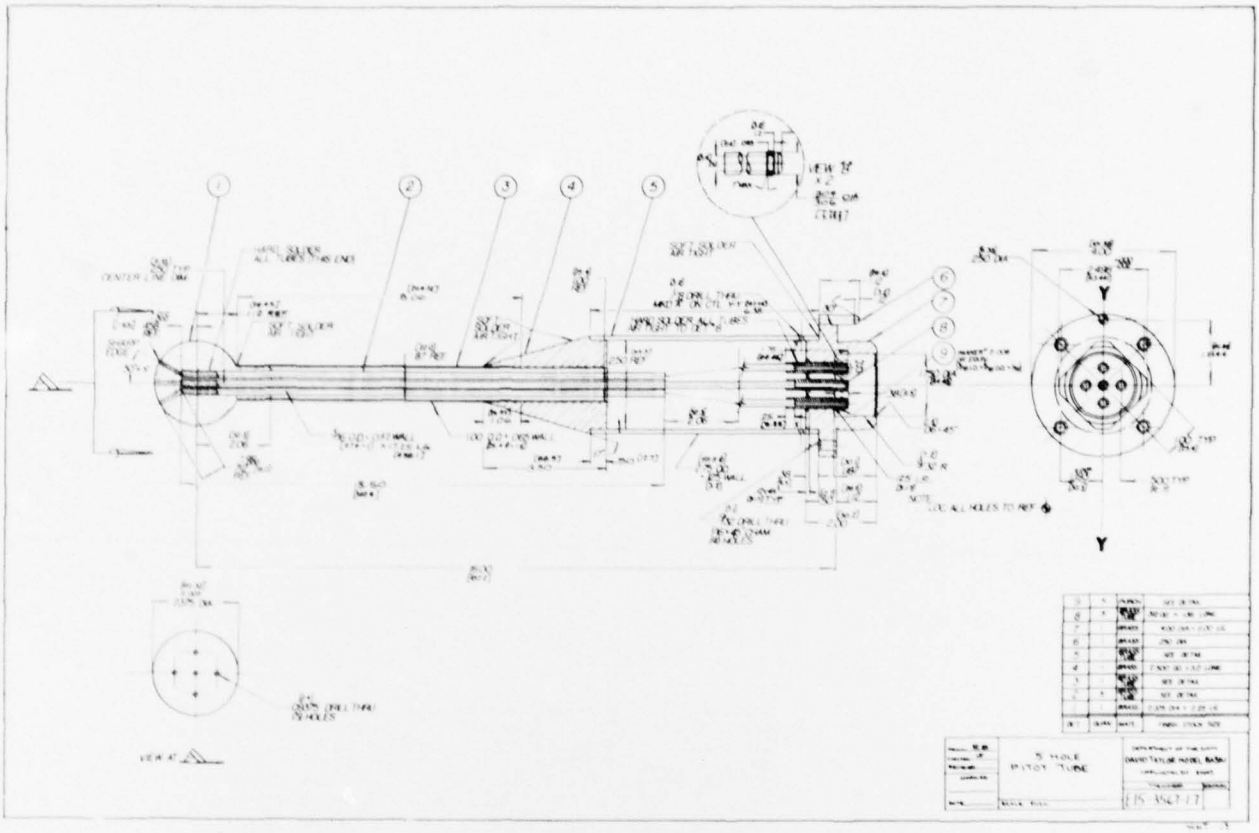

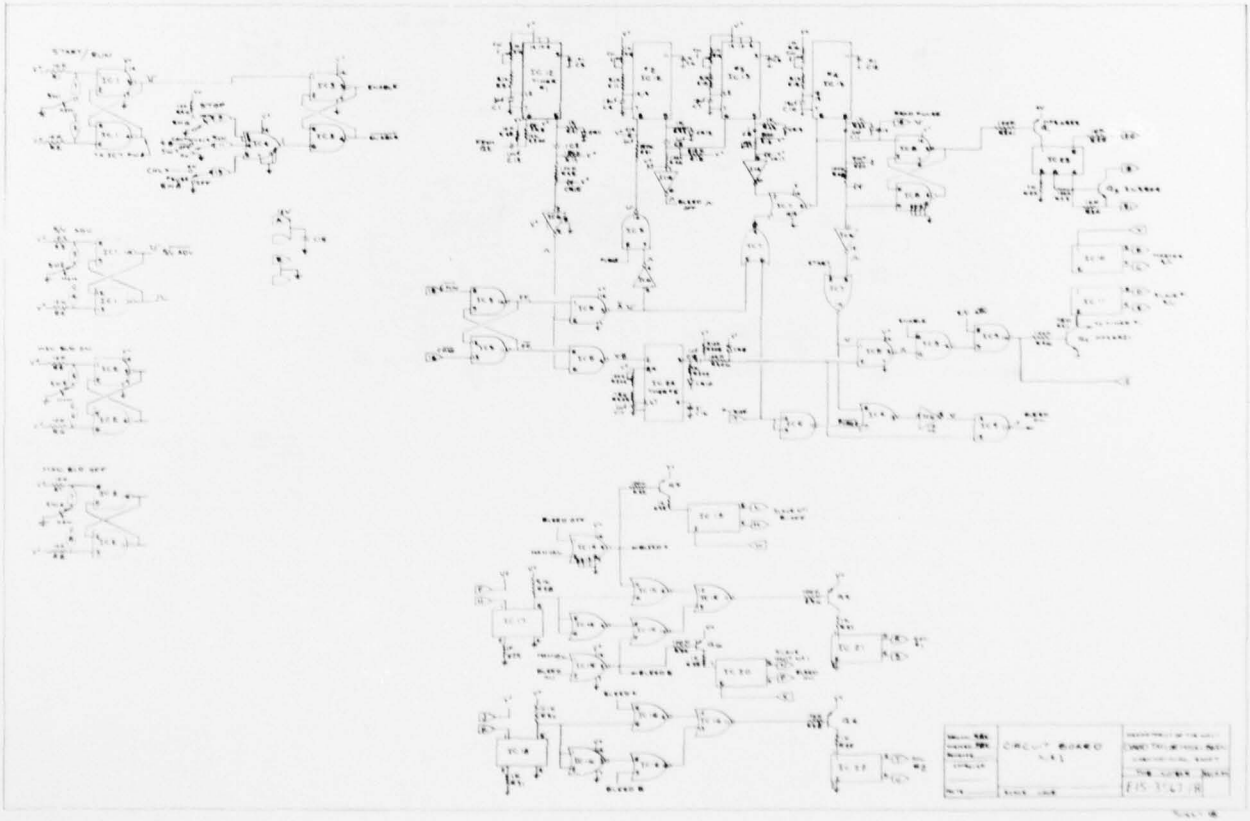

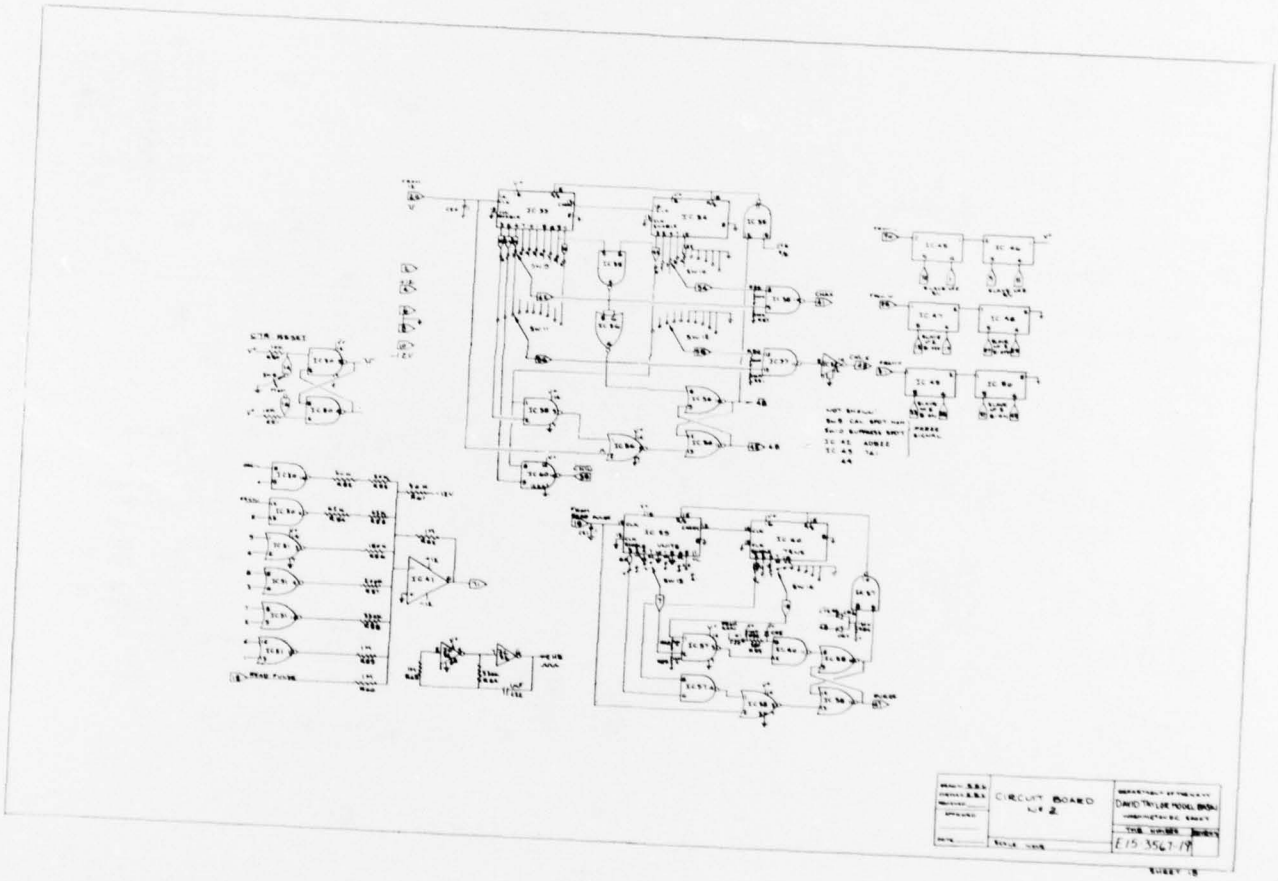
CIRCUIT BOARD
Nº 2
DAVID TAYLOR MODEL BASIN
E15-3567-19

INITIAL DISTRIBUTION

Copies		Copies	
2	CHONR	1	PENN STATE U ARL
	1 Code 438		1 Lib
	1 Lib	1	SIT DAVIDSON LAB
1	USNA		1 Lib
	1 Lib	1	HYDRONAUTICS
4	NAVSEA		1 Lib
	2 NAVSEA 05R	CENTER DISTRIBUTION	
	2 NAVSEA 05H	Copies	Code
12	DDC	1	15
1	BUSTAND/KLEANOFF	1	152
1	US COAST GUARD (G-ENE-4A)	1	1524
1	U CAL BERKELEY/DEPT NAME	1	154
1	CIT	1	156 Hagen
	1 Aero Lib	1	1556 Santore
1	U IOWA	1	1962 Zaloumis
	1 IHR/LANDWEBER	1	522.1 Library (C)
1	MIT	1	522.2 Library (A)
	1 Ocean Engr/Lib		
1	U MICHIGAN		
	1 NAME Lib		
1	U MINNESOAT SAFHL		
	1 Killen		