construction
engineering
research
laboratory

LEVEL II

(12) (9) INTERIM REPORT E-130
May 1978

(6) APPLICATION OF MODERN COAL TECHNOLOGIES TO MILITARY FACILITIES.

VOLUME II. EVALUATION OF THE APPLICABILITY AND COST OF CURRENT AND EMERGING COAL TECHNOLOGIES FOR THE UTILIZATION OF COAL AS A PRIMARY ENERGY SOURCE.

(10) V. Bruce /May, Craig L. /Koralek, Subhash S. /Patel C. Leon /Parker

AD A055995

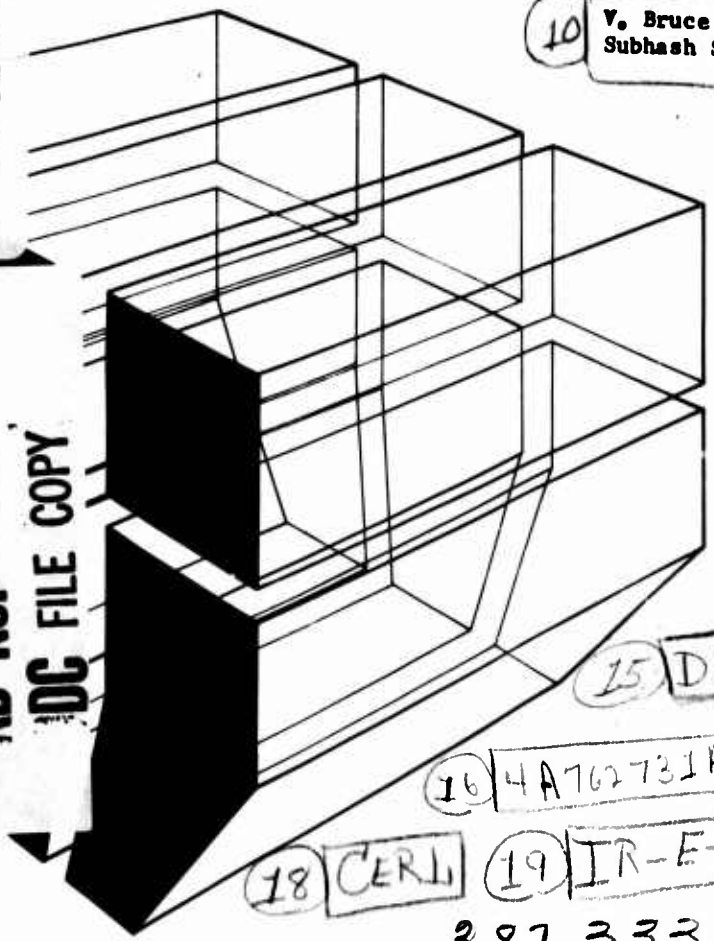

AD No.
DDC FILE COPY

(11) May 78
DDC
RECEIVED
JUL 5 1978
F
(12) 251p.

(15) DACA88-76-C-0097
(11) 06
(16) 4A762731AT41
(18) CERL (19) IR-E-130

CERL

387 333
78 07 03 019
JOB

Approved for public release; distribution unlimited.

The contents of this report are not to be used for advertising, publication, or promotional purposes. Citation of trade names does not constitute an official indorsement or approval of the use of such commercial products. The findings of this report are not to be construed as an official Department of the Army position, unless so designated by other authorized documents.

DESTROY THIS REPORT WHEN IT IS NO LONGER NEEDED
DO NOT RETURN IT TO THE ORIGINATOR

REPORT DOCUMENTATION PAGE		READ INSTRUCTIONS BEFORE COMPLETING FORM
1. REPORT NUMBER CERL-IR-E-130	2. GOVT ACCESSION NO.	3. RECIPIENT'S CATALOG NUMBER
4. TITLE (and Subtitle) APPLICATION OF MODERN COAL TECHNOLOGIES TO MILITARY FACILITIES, VOLUME II: EVALUATION OF THE APPLICABILITY AND COST OF CURRENT AND EMERGING COAL TECHNOLOGIES FOR THE UTILIZATION OF COAL AS A PRIMARY ENERGY SOURCE		5. TYPE OF REPORT & PERIOD COVERED INTERIM
		6. PERFORMING ORG. REPORT NUMBER
7. AUTHOR(s)		8. CONTRACT OR GRANT NUMBER(s) DACA 88-76-C-0007
9. PERFORMING ORGANIZATION NAME AND ADDRESS Hittman Assoc., Inc. Columbia, MD 21043		10. PROGRAM ELEMENT, PROJECT, TASK AREA & WORK UNIT NUMBERS 4A762731AT41-06-016
11. CONTROLLING OFFICE NAME AND ADDRESS CONSTRUCTION ENGINEERING RESEARCH LABORATORY P.O. Box 4005 Champaign, IL 61820		12. REPORT DATE May 1978
		13. NUMBER OF PAGES 248
14. MONITORING AGENCY NAME & ADDRESS(if different from Controlling Office)		15. SECURITY CLASS. (of this report) Unclassified
		15a. DECLASSIFICATION/DOWNGRADING SCHEDULE

16. DISTRIBUTION STATEMENT (of this Report)

Approved for public release; distribution unlimited.

17. DISTRIBUTION STATEMENT (of the abstract entered in Block 20, if different from Report)

18. SUPPLEMENTARY NOTES

Copies are obtainable from National Technical Information Service
Springfield, VA 22151

19. KEY WORDS (Continue on reverse side if necessary and identify by block number)

coal technologies
high-Btu gas
fluidized-bed combustion system

20. ABSTRACT (Continue on reverse side if necessary and identify by block number)

This report presents an overview of various technologies which are potentially applicable to replacement of oil and natural gas by coal at Army installations. Direct combustion of coal and conversion of coal to synthetic liquid and gaseous fuels are the two broad technology categories which are considered. In both categories there are commercial processes and processes under development. Near-term and long-range possibilities have been identified as have processes, systems, and technologies which are unsuited to the end application.

DD FORM 1 JAN 73 1473 EDITION OF 1 NOV 65 IS OBSOLETE

78 07 03 008

UNCLASSIFIED
SECURITY CLASSIFICATION OF THIS PAGE (When Data Entered)

Block 20 continued.

The characteristic fuel use patterns at Army installations have been used to develop "typical" personnel and non-personnel posts of large and medium size. Strategies for implementing a conversion to coal at these typical bases are presented and the major impacts upon the facilities are discussed. Estimates of the costs for the more favorable systems are included in this study.

Results of the study indicate that direct combustion of coal, using either conventional equipment or the experimental fluidized-bed system, is probably the preferred approach to eliminate natural gas and oil. High-Btu gas derived from coal may have some applications but costs appear excessive. Production of liquid fuels from coal cannot complete economically with other alternatives due to the small scale of the facility required.

Volume I of this report discusses installation energy requirements and provides conclusions and recommendations based on the information provided in this report.

FOREWORD

This research was performed for the Directorate of Facilities Engineering, Office of the Chief of Engineers (OCE), under Project 4A762731AT41, "Design, Construction, and Operation and Maintenance Technology for Military Facilities"; Task 06, "Energy Systems"; Work Unit 016, "Coal Utilization." The OCE Technical Monitor is Mr. L. Keller, DAEN-FEU-M.

The principal investigation of this volume was conducted by Messrs. V. Bruce May, Craig L. Koralek, Subhash S. Patel, and Dr. C. Leon Parker of Hittman Associates, Inc., Columbia, MD, under Contract No. DACA 88-76-C-0007 for CERL.

Mr. Paul Deminco, Chief of Energy and Environment at Fort George G. Meade, Maryland, assisted by providing data characterizing fuel consumption at that installation. Numerous private firms including American-Lurgi, Babcock and Wilcox, Koppers-Totzek, and Combustion Engineering contributed technical and cost information for their equipment.

Mr. R. G. Donaghy is Chief, CERL Energy and Habitability Division, COL J. E. Hays is Commander and Director of CERL, and Dr. L. R. Shaffer is Technical Director.

ACCESSION for
NTIS
DDC
BY
A

EXECUTIVE SUMMARY

This report presents an overview of the substitution of coal for natural gas and oil as a fuel at Army installations, and of the existing and developmental technologies which can be used to accomplish this transition. At present, coal is of minor importance to the Army as a fuel, but due to declining supply and increasing prices associated with natural gas and oil, it has become the only available replacement for them.

Several coal-based technologies have been rejected as inappropriate to existing needs. Coal liquefaction is one such technology, rejected because of process complexity, economics, and unfavorable scale-down parameters. Coal/oil slurries as a substitute or supplement to oil have been rejected because the reduction in oil consumption does not justify the needed additional equipment and operating changes. Technologies under development for the primary purpose of electrical power generation have not been considered because the objectives of this developmental area are not consistent with Army needs.

The areas showing most promise are direct combustion and coal gasification technologies. Conventional direct combustion, stokers and pulverized coal fired units, and the developmental fluidized-bed combustion system both appear highly suitable to Army installations. Low-Btu and near commercial high-Btu gasification, both based on Lurgi technology, are near-term (3-5 years) candidates for synthetic fuel gas. Developing high-Btu technology is more difficult to predict, but CO_2 Acceptor and HYGAS may be applicable if cost and technical complexity can be controlled. Other high-Btu processes may appear more favorable with further development.

Recommendations have been made based upon the characteristics of the processes and of the patterns of fuel use identified in this report. In summary, these recommendations are to emphasize replacement of oil- and gas-fired equipment with coal as equipment service life ends, and to actively monitor the progress in the state of the art of fluidized-bed combustion systems and in developing commercial gasification systems.

TABLE OF CONTENTS

DD FORM 1473		1
FOREWORD		3
EXECUTIVE SUMMARY		4
LIST OF TABLES AND FIGURES		6
1.	INTRODUCTION	13
2.	COAL COMBUSTION TECHNOLOGIES	22
3.	COAL CONVERSION TECHNOLOGIES	28
4.	SELECTION OF COAL TECHNOLOGIES	30
5.	IMPLEMENTATION STRATEGIES AND IMPACTS	32
6.	ECONOMICS OF COAL TECHNOLOGIES	75
7.	CONVERTIBILITY OF TYPICAL ARMY BASES	87
8.	CONCLUSIONS AND RECOMMENDATIONS	103
APPENDIX A:	COAL CONVERSION TECHNOLOGIES	107
APPENDIX B:	SELECTION OF COAL TECHNOLOGIES	123
APPENDIX C:	LOW- AND MEDIUM-BTU GASIFICATION PROCESSES	137
APPENDIX D:	HIGH-BTU GASIFICATION PROCESSES	163
APPENDIX E:	PYROLYSIS AND HYDROCARBONIZATION LIQUEFACTION PROCESSES	200
APPENDIX F:	HYDROGENATION LIQUEFACTION PROCESSES	214
APPENDIX G:	EXAMPLES OF BOILER CONVERSION	238
REFERENCES		241
DISTRIBUTION		

TABLES

Number		Page
1	Fuel Consumed by Combustion Units 3.5×10^6 Btu/hr	15
2	Total Natural Gas and Oil Used in Units > 3.5×10^6 Btu/hr	17
3	Natural Gas and Oil Consumed, 10^9 Btu/yr	18
4	Daily and Monthly Energy Use of a Large- and Medium-Sized Army Post	20
5	Size Distribution of Combustion Units at Army Facilities	21
6	Comparative Furnace Dimensions	37
7	Implementation and Impact of Conversion or Replacement of Oil- or Gas-Fired Units to Stokers	46
8	Implementation and Impacts of Conversion or Replacement of Oil- or Gas-Fired Units to Pulverized Coal-Fired Units	47
9	Implementation and Impact of Conversion or Replacement of Oil- or Gas-Fired Units to Fluidized-Bed Boiler	48
10	Implementation and Impact of Conversion or Replacement of Oil- or Gas-Fired Units to Coal/Oil Slurry	49
11	Technical Factors, Low-Btu Gasification	51
12	Process Factors, Low-Btu Gasification	53
13	Equipment Modifications, Low-Btu Gasification	54
14	Utilization Factors, Low-Btu Gasification	55
15	Economic Impacts, Low-Btu Gasification	58
16	Operational Impacts, Low-Btu Gasification	59
17	Process Related Impacts, Low-Btu Gasification	60

TABLES (CONTINUED)

Number		Page
18	Technical Factors in High-Btu Gasification	62
19	Process Factors in High-Btu Gasification	63
20	Equipment Modification in High-Btu Gasification	64
21	Utilization Factors Affecting High-Btu Gasification	65
22	Economic Impacts, Lurgi High-Btu Gasification	67
23	Process Related Impacts, Lurgi High-Btu Gasification	68
24	Operational Impacts, Lurgi High-Btu Gasification	69
25	Process Factors, CO_2 Acceptor Gasification	70
26	Utilization Factors, CO_2 Acceptor	71
27	Operational Impacts, High-Btu Gasification	73
28	Economic Impacts, High-Btu Gasification	74
29	Capital Costs of Converting Coal - Near-Term - Direct Combustion	76
30	Capital Costs, Low-Btu Gasification	77
31	Low-Btu Gas, Lurgi Operating Costs	78
32	Capital Costs, Lurgi High-Btu Gas Gasification	79
33	High-Btu Gas, Lurgi Operating Costs	80
34	High-Btu Gas, Capital Costs of CO_2 Acceptor	81
35	High-Btu Gas, CO_2 Acceptor Operating Costs	82
36	Relative Fuel Prices, 1976	86

TABLES (CONTINUED)

Number		Page
37	Convertibility of Medium-Sized Personnel Installations to Coal as a Primary Energy Source: Near-Term Alternatives	90
38	Convertibility of Large-Sized Personnel Installations to Coal as a Primary Energy Source - Near-Term Alternatives	91
39	Convertibility of Medium-Sized Industrial Installations to Coal as a Primary Energy Source: Near-Term Alternatives	92
40	Convertibility of Large-Sized AIF/GOCO Installations to Coal as a Primary Energy Source: Near-Term Alternatives	93
41	Convertibility of Medium-Sized Personnel Installations to Coal as a Primary Energy Source: Long-Term Alternatives	94
42	Convertibility of Large-Sized Personnel Installations to Coal as a Primary Energy Source: Long-Term Alternatives	95
43	Convertibility of Large-Sized Industrial Installations to Coal as a Primary Energy Source: Long-Term Alternatives	96
44	Convertibility of Medium-Sized Industrial Installations to Coal as a Primary Energy Source: Long-Term Alternatives	97
A-1	Commercial Gasification Processes	110
A-2	Developing Gasification Processes	110
A-3	Coal Liquefaction Processes	116
B-1	Factors Influencing Applicability of Technologies to Army Use	124
B-2	Summary of Factors in Direct Combustion Application	127
B-3	Product Factors Affecting the Low-Btu Gas Applicability to Army Bases	129

TABLES (CONTINUED)

Number		Page
B-4	Equipment Factors Affecting Applicability of Low-Btu Gas to Army Use	130
B-5	Product, By-Product, and Waste Factors	131
B-6	Product and Process Factors Affecting Applicability of High-Btu Gas to Army Use	133
B-7	Equipment Factors Affecting Applicability of High-Btu Gas to Army Use	134

FIGURES

Number		Page
1	Fluidized-Bed Boiler	25
2	Flowsheet for Coal-Handling Storage and Preparation	35
A-1	Basic Features of Low-Btu Gasification Processes	112
A-2	Basic Features of High-Btu Gasification Processes	114
A-3	Basic Features of Pyrolysis Processes	118
A-4	Basic Features of Hydrogenation Processes	122
C-1	Lurgi Low-Btu Gasifier	142
C-2	Lurgi Low-Btu Process Flow Sheet	143
C-3	Koppers-Totzek Gasification Process	148
C-4	Winkler Coal Gasifier Process Schematic	153
C-5	Wellman-Galusha Gasifier	156
C-6	Low-Btu Gasification of Coal for Electricity Generation in the Combustion Engineering Process	159
C-7	Advanced Coal Gasification System for Electric Power Generation in the Westinghouse Process	162
D-1	Lurgi High-Btu Gasifier	168
D-2	Lurgi High-Btu Gasification Process	169
D-3	CO_2 Acceptor Gasification Process	174
D-4	HYGAS Process	180
D-5	BIGAS Process	185
D-6	SYNTHANE Process	190
D-7	HYDRANE Process	193
D-8	Agglomerating Burner Process	196

FIGURES (CONTINUED)

Number		Page
D-9	M.W. Kellogg's Molten Salt Process	199
E-1	COED Process Flow Diagram	206
E-2	Coalcon Hydrocarbonization Process	210
E-3	Fischer-Tropsch Process	213
F-1	SRC Process Flow Diagram	220
F-2	H-Coal Process Flow Diagram	225
F-3	EDS Process Flow Diagram	229
F-4	SYNTHOIL Process Flow Diagram	234
F-5	Costeam Process	237

1 INTRODUCTION

Rationale For Characterization of Installations. The United States Army is relying heavily on natural gas and oil fuels at military installations. Coal has declined in importance as a fuel in all but a few cases. Reasons for this decline include the convenience and cleanliness of gas and oil and the economic advantages they offered. Price increases have reduced the economic advantages, and, if it occurs, decontrol of natural gas well head prices will further reduce those advantages. Uncertainty of the future availability of both natural gas and oil, due to both possible deliberate interruptions of foreign supplies and decreasing recoverable reserves in the United States, add to the loss of advantages these fuels possessed.

Coal is the only fossil fuel present in sufficient quantities to be considered as a replacement for natural gas and oil. The use of coal poses problems which may limit its applicability to military installations. It is less convenient to handle because it is solid, rather than fluid. Combustion of coal is best effected in moderate to large capacity furnaces. Governmental restrictions on discharges of pollutants exist and many types of coal cannot meet these restrictions without extensive preparation or control measures.

There are techniques to avoid or reduce the problems associated with coal as a fuel. These include use of coal selected for minimal impurities, use of emissions controls on coal-fired units, new combustion technologies, and conversion of coal to synthetic fuels. Not all of these will be applicable to military installations, due in part to the nature of the installations. Military installations typically include heating units and steam generating units ranging in size from individual dwelling heating units to industrial boilers. There are two distinct types of installations, those primarily oriented toward personnel and those oriented toward industrial operations. Personnel-oriented facilities are defined as Forces Command posts, Training and Doctrine Command posts, and specialty and miscellaneous installations. Industrial facilities are defined as Materiel Development and Readiness Command facilities, whether government-owned and contractor-operated or operated by the Army Industrial Fund. Differences in patterns of fuel use between these two types occur. The personnel posts generally provide individual dwelling units for large numbers of families. Industrially oriented installations have few individual dwelling units, but have a greater number of large-sized high-pressure steam boilers.

PRECEDING PAGE BLANK

Natural gas and oil are used in different proportions between these two types of installations. Coal has only minor importance in both types, with the exception of a few industrial installations.

In this study the forty largest Army installations, in terms of fuel consumption, have been used to characterize the fuel use at personnel and industrial bases. The ten largest installations in each of the two major personnel oriented and industrially oriented bases were selected. Basic data was obtained from the "Red Book"[1]. Corroborative information was obtained through direct post communications with Fort George G. Meade, Maryland, and Fort Knox, Kentucky. It must be emphasized that the "typical" Army installations described in the following sections are typical in the sense that they provide a model of the two types of posts, but do not match exactly any individual post.

Summary of Military Fuel Use. For the 40 largest military installations the total annual energy use ranges from 0.344×10^{12} Btu/year to 5.063×10^{12} Btu/year.[2] The total energy use is summarized in Tables 1 and 2 for the 40 largest Army facilities. Included in this list are the ten largest bases dedicated to both personnel and industrial functions.

Over 85 percent of the total energy consumption (excluding electricity) goes to heating. Of this, approximately 32 percent is consumed by centralized systems, consisting of units of 3.5×10^6 Btu per hour or greater, and 25 percent is consumed by area heating plants having capacities in the range of 0.75 to 3.5×10^6 Btu per hour. Total annual consumption by units of capacity greater than 3.5 M Btu/hr, the breakdown by fuel type (natural gas, oil, and coal), and the percent of total military post's fuel consumed in these units is summarized for the 40 largest posts in Table 1.

Coal is a relatively minor fuel at personnel posts. It represents a greater fraction of the total fuel used at other installations. The values reported in Table 1 were generated from data obtained from the "Red Book," on total energy consumed by each post. Thus the quantities of natural gas, oil, and coal as shown are in the same proportion for each of the personnel and the industrial posts. These tables are for the purpose of demonstrating average proportions of the fuels used and do not reflect actual practice at each post listed.

---

[1] *Facilities Engineering Annual Summary of Operations Fiscal Year 1975* (Department of the Army, Office of the Chief of Engineers).

[2] (US Army Engineering Support Agency, 1974) H. D. Hollis and V. Nida, *Characteristics of Energy Usage on Military Installations.*

TABLE 1. Fuel Consumed by Combustion Units 3.5×10^6 Btu/hr

Installation	Total Installation Fuel Use 10^6 Btu/hr	Percent of Total Fuel Used by Units> 3.6×10^6 Btu/hr	Total Fuel Used by Units> 3.6×10^6 Btu/hr	Breakdown of Consumption by Fuel Types		
				Natural Gas 10^9 Btu/yr	Oil 10^9 Btu/yr	Coal 10^9 Btu/yr
Fort Bragg	2,731,465	45.6	1245.5	859.4	323.8	62.3
Fort Lewis	2,129,508	35.5	766.0	521.6	196.6	37.8
Fort Carson	1,698,861	26.3	444.8	308.3	80.2	22.3
Fort Hood	1,819,675	15.0	273.0	188.3	71.0	13.6
Fort Wainwright	1,598,832	98.3	1571.6	1084.4	408.6	78.6
Fort Riley	1,512,818	33.5	506.8	349.7	90.9	25.3
Fort Campbell	1,423,750	47.3	673.4	464.7	175.1	33.7
Fort Meade	1,487,886	33.6	499.9	345.0	130.0	65.0
Fort Richardson	1,452,415	95.7	1423.9	982.5	370.2	71.2
Fort Devens	1,046,177	31.7	331.6	228.8	86.2	16.6
Fort Knox	2,390,814	18.5	442.3	305.2	115.0	22.1
Fort Benning	2,046,959	48.1	984.5	679.4	256.0	29.2
Fort Bliss	1,758,287	19.4	341.1	235.4	88.7	17.1
Fort Ord	1,500,319	21.6	324.1	223.6	84.3	16.2
Fort Dix	1,486,003	67.2	998.6	689.0	259.6	49.9
Fort Leonard Wood	1,480,627	28.5	422.0	291.2	109.7	21.1
Fort Sill	1,359,812	20.7	281.5	194.2	73.2	14.1
Fort Jackson	1,262,891	63.4	800.7	552.5	208.2	40.0
Fort Gordon	1,261,710	64.2	810.0	558.9	210.6	40.5
Fort Belvoir	1,084,899	49.5	537.0	370.5	139.6	26.9

Prepared from data for 1975

TABLE 1. Fuel Consumed by Combustion Units 3.5×10^6 Btu/hr (Continued)

	Total Installation Fuel Use 10^6 Btu/hr	Percent of Total Fuel Used by Units 3.6×10^6 Btu/hr	Total Fuel Used by Units 3.6×10^6 Btu/hr	Breakdown of Consumption by Fuel Types		
				Natural Gas 10^9 Btu/yr	Oil 10^9 Btu/yr	Coal 10^9 Btu/yr
Aberdeen PG	1,920,712	61.5	1180.9	318.8	708.5	153.5
Redstone AR	1,872,455	91.5	1713.3	462.6	1028.0	222.7
Picatinny AR	934,853	98.3	919.0	248.1	551.4	119.5
Rock Island AR	722,482	95.8	692.1	415.3	415.3	889.8
Tobyhanna AD	519,495	95.0	493.5	296.1	296.1	64.2
Letterkenny AD	432,213	82.5	356.6	213.9	213.9	46.4
New Cumberland AD	430,806	92.8	399.8	239.9	239.9	52.0
Frankford AR	344,263	78.0	268.5	161.1	161.1	34.9
Tooele AD	378,919	99.9	378.5	227.1	227.1	49.2
Pine Bluff AR	352,877	78.3	276.3	165.8	165.8	35.9
Holston AP	5,062,633	99.9	5052.5	1364.2	3031.5	656.8
Radford AP	3,882,947	100.0	3882.9	1048.4	2329.8	504.8
Badger AP	1,087,733	100.0	1087.7	293.7	652.6	141.4
Johiet AP	1,417,423	100.0	1417.4	382.7	850.5	184.3
Iowa AP	1,110,278	100.0	1110.3	299.8	666.2	144.3
Volunteer AP	856,037	100.0	856.0	231.1	513.6	111.3
Lone Star AP	651,530	97.6	635.9	171.7	381.5	82.7
Twin Cities AP	628,530	100.0	651.5	175.8	390.7	84.6
Lake City AP	539,503	100.0	539.5	145.7	323.7	70.1

Reference: Facilities Engineering Annual Survey of Operations Fiscal Year 1975 Department of the Army, Office of the Chief of Engineers

TABLE 2. Total Natural Gas and Oil Used in Units $>3.5 \times 10^6$ Btu/hr

Fort Bragg	1183.2	Fort Knox	420.2	Aberdeen	1027.3	Holston	4395.7
Fort Lewis	718.2	Fort Benning	935.4	Redstone	1490.6	Radford	3378.2
Fort Carson	388.5	Fort Bliss	324.1	Picatinny	799.5	Badger	946.3
Fort Hood	259.3	Fort Ord	307.9	Rock Island	602.2	Johet	1233.5
Fort Wainwright	1493.0	Fort Dix	948.6	Toby Hanna	429.4	Iowa	966.0
Fort Riley	440.6	Fort Leonard Wood	400.9	Letter Kenny	310.2	Volunteer	744.7
Fort Campbell	639.8	Fort Sill	267.4	New Cumberland	347.8	Lone Star	553.2
Fort Meade	475.0	Fort Jackson	760.7	Pine Bluff	233.6	Twin Cities	566.5
Fort Richardson	1352.7	Fort Gordon	769.5	Frankford	329.3		
Fort Devens	315.0	Fort Belvoir	510.1	Tooele	240.4	Lake City	469.4
Subtotal	7265		5645		5810		13254

Personnel Total 12910

Industrial Total 19064

Overall Total 31974

All values are in Btu x 10^9

The distribution between natural gas and oil consumption is summarized in Table 3. Substitution of coal or coal-derived fuels for natural gas and oil at all 40 posts would effect a reduction of approximately 32×10^{12} Btu annually consumed by these fuels. Of this amount, 19×10^{12} Btu per year as natural gas and oil would result from conversion to coal at industrial installations and 13×10^{12} Btu per year from conversion at personnel posts. Table 2 summarizes the natural gas and oil consumption by post. If direct combustion of coal were to replace natural gas and oil-fired equipment, the overall efficiency would not vary greatly from existing systems, and the total thermal input would be roughly equal to the current values. Conversion of coal to gas or liquid fuels, however, is subject to significant energy losses due to process inefficiencies. Coal conversion processes range in efficiency from under 50 percent to an optimistic estimated high of 80 percent. This inefficiency will result in an increase in the quantity of coal needed (as measured by heating value) over the equivalent natural gas and oil when synthetic fuels are produced.

TABLE 3. Natural Gas and Oil Consumed, 10^9 Btu/yr

	Natural Gas	Oil	Total
Personnel			
Forces Command	5333	1933	7266
Training & Doctrine Command	4100	1545	5645
Subtotal Personnel	19433	3478	12911
Industrial			
Materiel Development and Readiness Command	1803	4007	5810
Army Industrial Fund	4113	9140	13253
Subtotal Industrial	5916	13147	19063
Total	15349	16625	31974

On the basis of total fuel consumption reported, large military installations have been defined as consuming 5×10^{12} Btu annually and medium-sized installations have been defined as consuming 5×10^{11} Btu annually. While this defines the total energy consumption, it does not define maximum or minimum rates. For this purpose it has been assumed that three peak months will each require one-eighth (or a total of three-eighths) of the annual consumption. Six months will require one-half the annual fuel and the remaining fuel will be equally divided among the remaining 3 months. Table 4 shows the resulting breakdown by monthly and daily use.

Characterization of Army Installations. The numbers and sizes of units to be converted from natural gas and oil to coal are a prime consideration in planning and implementing such conversion. Factors affecting this distribution of size and type include the kind of Army facility and the size in terms of fuel consumption. Personnel posts show a numerical predominance of small heating units, for dwellings, with the energy consumed in these units being a major fraction of total post consumption. Industrial installations use most of the fuel in large high-pressure boilers, consuming only a few percent of the total in individual building units.

Table 5 has been synthesized from available data to define "typical" medium and large installations of the two types first discussed. The large and medium personnel posts listed in Table 5 have several thousand units of capacity less than 0.75×10^6 Btu/hr. (In fact, nominal rated capacities have been assumed to be 100,000 Btu/hr). Corresponding units at industrial facilities number 100 or less. Centralized boilers of capacity 0.75×10^6 to 3.5×10^6 Btu/hr show the same distribution pattern. For boilers with capacities greater than 3.5×10^6 Btu/hr, the personnel posts also have a larger number of units, but the rated capacities are considerably smaller than those at industrial facilities, generally by factors of 5 to 25.

TABLE 4. Daily and Monthly Energy Use of a Large- and Medium-Sized Army Post

	Number of Months	Fraction of Total Annual Rate	Monthly* Rate Btu	Daily Rate Btu	Natural Gas Equivalent (SCFD)	Medium Post $5x10^{11}$ Btu/yr Monthly Rate Btu	Daily Rate Btu	Natural Gas Earn (SCFD)
Peak month	3	1/8	$625x10^9$	$20.8x10^9$	$20.8x10^6$	$62.5x10^9$	$2.08x10^9$	$2.08x10^6$
Average month	6	1/12	$417x10^9$	$13.9x10^9$	$13.9x10^9$	$41.7x10^9$	$1.39x10^9$	$1.39x10^6$
Minimum month	3	1/24	$208x10^9$	$6.9x10^9$	$6.9x10^9$	$20.8x10^9$	$0.69x10^9$	$0.69x10^6$

*30 day month

TABLE 5. Size Distribution of Combustion Units at Army Facilities*

Installation Type and Size	Total Annual Fuel Consumption (Btu)	Size Range (10^6 Btu/hr)	No. of Units	Nominal Average Btu/hr Rated Capacity	Load Factor	Total Average All Units (10^6 Btu/hr
Personnel Large	2.4×10^{12}	>3.5	25	5×10^6	25%	52
		0.75-3.5	90	3×10^6	25%	68
		<0.75	6100	100×10^3	25%	153
Personnel Medium	1.5×10^{12}	>3.5	45	5×10^6	25%	56
		0.75-3.5	80	3×10^6	25%	63
		<0.75	2000	100×10^3	25%	51
Industrial Large	5.0×10^{12}	>3.5	5	125×10^6	90%	572
		0.75-3.5	4	3×10^6	25%	3
		<0.75	100	100×10^3	25%	3
Industrial Medium	0.5×10^{12}	>3.5	3	25×10^6	90%	56
		0.75-3.5	2	3×10^6	25%	1
		<0.75	80	100×10^3	25%	2

Data derived from Tables 1-4

2 COAL COMBUSTION TECHNOLOGIES

Introduction. Coal is a complex and highly variable fuel. It is the nation's most plentiful developed energy source. Many problems are encountered in the direct combustion of coal, however, because of the variability of its constituents and properties. Impurities such as ash and sulfur add pollution and waste handling to the problems encountered in using coal as a fuel.

Direct combustion of coal as a primary energy source is one of several ways to use coal in place of natural gas and oil. A number of possible combustion systems may be considered, both existing and developmental technologies. Various combustion technologies such as conventional coal-burning furnaces, fluidized-bed combustion systems, and coal/oil slurry fired boilers are among potentially viable alternatives. Support systems, such as mechanical and chemical coal cleaning which can reduce air emission levels, also may be applicable.

Direct combustion and conversion processes require coals with specific physical and chemical properties, such as moisture content and particle size. Coal preparation can reduce ash, moisture, and pyritic sulfur, and limit potential solid waste and sulfur dioxide emissions.

Methods of chemical removal of pyritic and organic sulfur from coal are in the developmental stage, but no practical method exists at this time because of both technological and economical reasons. After preparation, the coal may be delivered to the user by train, truck, barge, or a new technology, slurry pipeline. The coal is unloaded and stored for use in open piles or closed storage facilities such as bins or concrete silos. Additional pre-use preparation to size or dry may be necessary.

Direct Combustion of Coal. Each direct combustion system must be designed specifically for the coal that will be utilized. Reduced capacity and efficiency will result if the system and coal properties are not matched. Properties of coal which must be considered in system selection and design include heating value, moisture, ash, and sulfur content, grindability, and ash characteristics such as fusion temperature.

Several direct combustion systems are discussed below. Conventional systems such as stokers and pulverized coal units are only briefly mentioned, since these combustion methods are well documented. Other newer processes such as fluidized-bed combustion and coal/oil slurries are covered in greater detail.

Conventional Combustion Systems. Stokers were an early development in steam boiler technology. These units provide continuous feeding, ash removal, and higher combustion rates than hand-fired boilers. Because they require minimal space, stokers are used today with many small and medium-sized boilers.

Pulverized coal-fired units currently offer the maximum flexibility in coal substitution. In addition to the boiler itself, coal pulverizers are necessary to grind and prepare the coal. Pulverized coal-fired units are sometimes more economical than stokers for plants larger than 200,000 lb of steam per hour. Both stokers and pulverized coal-fired boilers are widely used. Much information is available on these systems and there are numerous supply and construction sources.

Fluidized-Bed Combustion (FBC). The fluidized-bed combustion concept currently being developed in the United States and Britain promises to provide higher energy conversion efficiency than conventional coal-fired systems (up to 40% as opposed to 33 to 37%). Lower sulfur dioxide and nitrogen oxide emissions, even when burning high-sulfur coals, also are expected. FBC equipment can burn many types and grades of coal as well as municipal sludge and refuse, oil shale, industrial and agricultural waste materials, and other low-grade fuels. In bench-scale tests, FBC has removed over 90 percent of the sulfur dioxide pollutants normally expected from coal. This may eliminate the need for expensive and massive sulfur dioxide stack gas cleaning or coal desulfurization. Other advantages of FBC include:

- Low-quality high-sulfur coal can be burned without danger of slagging, due to low combustion temperatures.
- The heat release and heat transfer coefficients are high, reducing required boiler size, weight, and cost.
- The multicell design lends itself to mass production assembly of the major components, facilitating shipping and saving plant construction time. On-site fabrication of components can be eliminated.

- It is anticipated that use of the fluidized-bed boiler, rather than a conventional coal-fired boiler requiring a flue gas cleanup system, will result in an overall cost savings for the boiler of up to 35 percent[3].

- The overall operating efficiency of the multicell fluidized-bed boiler power plant is projected to be 39 percent compared to approximately 37 percent for a conventional coal-fired plant with stack gas cleanup equipment[4].

In a fluidized-bed boiler (Figure 1), small particles of a limestone or dolomite sorbent are fluidized by hot air. This fluidized bed is heated to approximately 1600°F. Finely crushed coal is fed into the fluidized bed. The feed rate is such that the amount of combustible material in the bed is usually less than 1 percent. Turndown is accomplished by reducing air and coal flow into the bed. The sulfur in the coal which comes off as a sulfur dioxide is captured by the sorbent as calcium sulfate. Powdered dolomite or limestone sorbent is continuously removed. The low combustion temperature minimizes formation of nitrogen oxides and prevents ash agglomeration. Calcium sulfate is discharged with the ash.

A multicell fluidized bed boiler is being developed and installed at Rivesville, West Virginia, by Pope Evans and Robbins, Inc., in conjunction with Foster Wheeler Energy Corp. and Champion Construction and Engineering, Inc. This project, sponsored by ERDA, is designed to develop a 30-MW multicell fluidized-bed boiler. The multicell bed operates at atmospheric pressure. The fluidized-bed boiler (Figure 1) consists of four separate cells, three of which are approximately equal in size. These three cells burn fresh coal in 18 percent excess air at a temperature of 1500°F. Unburned carbon, approximately 10-15 percent of the heating value of the feed coal, along with fly ash is collected in cyclones and sent to the narrower fourth cell, the carbon burn up cell (CBC), where the remaining carbon is burned at 2000°F in 25 percent excess air. At this temperature most of the ash sinters, producing round pellets that can be used as fill or aggregate material. Plume opacity and particulate emissions can be controlled by an electrostatic precipitator. Quantities of solid waste can be greatly reduced if the sorbent is regenerated. Several processes to reclaim the sorbent are under study.

---

[3] *Power and Combustion*, Quarterly Report (Office of Fossil Energy, ERDA, October-December 1975), p 8.

[4] *Power and Combustion*.

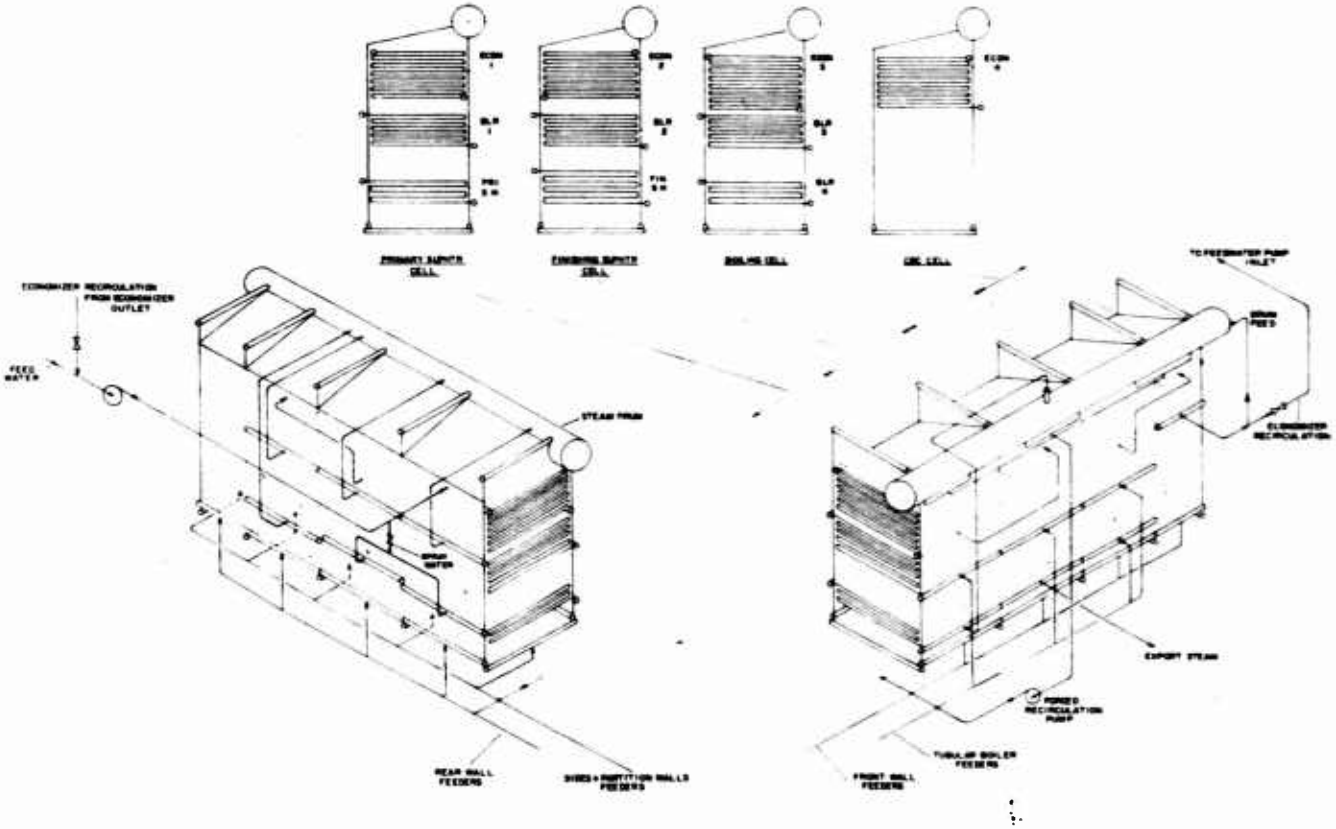

Figure 1. Fluidized-Bed Boiler

Pressurized fluidized-bed systems are in an earlier stage of development. These systems would provide additional economic savings and increased thermal efficiency. The furnace size can be reduced because of decreased gas volume and additional sulfur dioxide can be removed. However, the units appear more appropriate for large installations such as 200 MW or greater power plants.

Emission Controls. Regulations limiting atmospheric discharges from fossil-fuel-fired equipment have been proposed and adopted by most states and the United States Environmental Protection Agency. In general the most important materials considered have been sulfur dioxide, particulates, and nitrogen oxides.

The current EPA limitations on sulfur dioxide apply only to equipment burning fuel at a rate of 250,000,000 Btu per hour or more. Equipment at Army facilities is rated below this rate; however, centralized systems may exceed it.

For coal-fired units the limit on SO_2 is 1.2 lb/million Btu. Particulates are limited, regardless of unit size, to 0.1 lb/million Btu. The standard for NO_x is 0.7 lb/million Btu.

Sulfur Dioxide Controls. The Clean Air Act charges the United States Environmental Protection Agency with the responsibility for establishing national performance standards for new stationary sources based upon the best system of air emission reduction that has been adequately demonstrated. All new coal-fired steam plants rated at 250,000,000 Btu/hr or greater are required to limit emissions of SO_2 to 1.2 lb/million Btu. Each state is required by law to implement emission control regulations that will achieve and maintain national ambient air quality standards. Most states have found it necessary to establish sulfur dioxide limitations approximately equivalent to those of EPA. A few states have more lenient standards and some states, such as New Jersey, have imposed more stringent emission standards. As a result, most states restrict coal combustion to fuels with minimal sulfur content. Sulfur content is limited to anywhere from 0.2 percent to 2 percent.

Conventional furnaces, such as stokers and pulverized coal furnaces, use two primary methods for reducing sulfur dioxide emissions. Limestone injection into the furnace, followed by wet scrubbing of the flue gas, is one. The more popular method is wet limestone scrubbing.

In the limestone injection system, ground limestone is mixed with the coal and injected into the combustion zone. Part of the sulfur is absorbed by the calcium in the limestone. It is estimated that 40-50 percent of the sulfur is removed. The remainder must be eliminated from the flue gas as SO_2 by wet scrubbing. Reduced boiler efficiency, due to ash accumulation on the boiler heat transfer surfaces, is a major problem with this system.

The second control method, wet limestone scrubbing, uses a ground limestone/water slurry that is contacted with the flue gas, removing 90-95 percent of the SO_2. The spent limestone is removed as a sludge and the water is recycled. In regenerable processes the alkali is reclaimed and used again in the system. Sulfur is recovered as elemental sulfur or sulfuric acid.

Particulate Controls. The EPA Standard for atmospheric emission of particulate matter from fossil fueled power plants was established at a maximum of 0.1 lb/million Btu of heat input per hour. Individual state regulations for smaller plants (less than 10 million Btu/hr) permit on the average 0.6 lb/million Btu input. Particulate control equipment consists basically of one of four general categories:

(1) dry mechanical collectors

(2) wet scrubbers

(3) fabric filters

(4) electrostatic precipitators

NO_x Emissions. Although there currently are no restrictions on emission of oxides of nitrogens for boilers under 250,000,000 Btu/hr, it has been suggested that these oxides constitute a serious pollution problem. It is anticipated that regulations will be established in the near future. Nitric oxide levels can be minimized by keeping the combustion temperature as low as possible. The NO_x concentration is sensitive to the amount of excess air present during combustion.

3 COAL CONVERSION TECHNOLOGIES

Introduction. Appendix A discusses various coal conversion technologies under development or commercially available. Fuels produced by these processes include low-, medium-, and high-Btu gas, liquid fuels, and clean burning coal or char. All of these processes convert coal, an inherently dirty fuel, into a relatively clean fuel which can be used as a substitute for depleted oil and natural gas supplies.

Gasification. During gasification coal is reacted with steam and oxygen. Particulates and condensibles carried with the gas from the reactor are removed by quenching. Sulfur compounds are removed later in the process. The crude gas consists basically of H_2, CO, CO_2, CH_4, H_2O, and N_2 and has a heating value of 100 to 500 Btu/SCF. The heating value of natural gas is approximately 1000 Btu/SCF. The crude low- to medium-Btu gas can be converted to high-Btu gas ($\geq$ 950 Btu/SCF). Commercial low- and medium-Btu gasification plants exist in most parts of the world but none are operating in the United States. In this country low-Btu gas use was phased out with the advent of trans-continental natural gas pipelines. Most developmental low-Btu effort in the United States is currently aimed at producing a fuel gas for high-temperature combined gas-steam turbine electric generators, making fuel gas for captive industrial use, and production of synthesis gas for chemical processing. Current available commercial processes for low- and medium-Btu gas production include Lurgi, Winkler and Koppers-Totzek as the major systems. Low- and medium-Btu processes are described in Appendix C.

High-Btu gasification processes require additional steps to be added to the low-Btu gasification processes. The final product is composed mainly of methane and can be transported in existing natural gas pipelines. No modifications to existing combustion equipment are necessary in using synthetic high-Btu gas.

To produce high-Btu gas, the coal is reacted with steam and oxygen. The particulates, condensables, and sulfur compounds are eliminated. Carbon dioxide is removed and the hydrogen to carbon monoxide ratio is adjusted to three to one. The CO and H_2 are then catalytically converted to methane.

The Lurgi high-Btu process is the most promising commercially available system. CO_2 Acceptor, Synthane, and HYGAS are the developmental processes that are probably closest to commercialization. Descriptions of these and other high-Btu processes are presented in Appendix D.

Liquefaction. Coal liquefaction processes for converting coal into liquid fuels for use as a utility fuel, synthetic crude, and/or petroleum feedstock, are being developed. By increasing the weight ratio of hydrogen to carbon, through (1) pyrolysis and hydrocarbonization or (2) catalytic or non-catalytic hydrogeneration, the coal can be converted into a liquid fuel.

(1) Pyrolysis and Hydrocarbonization. During pyrolysis coal is heated in the absence of direct hydrogen contact. The volatile materials and naturally occurring oils are driven off. The product oil is hydrotreated to remove impurities such as nitrogen, sulfur, and oxygen. Hydrocarbonization on the other hand, reacts heated hydrogen-rich gas with the coal, driving off the volatile gases. The char is reacted with steam and air (or oxygen) to produce the required hydrogen.

(2) Catalytic and Non-Catalytic Hydrogenation. Hydrogenation of coal is another method of liquefaction. Coal is directly contacted with hydrogen at elevated temperature and pressure. Catalytic hydrogenation has a higher liquid product yield than non-catalytic hydrogenation. At ambient temperatures the product may be either solid or liquid.

Solvent Refined Coal, a hydrogenation process, is the most advanced United States liquefaction technology. H-Coal and the donor solvent process also show great promise. A number of liquefaction technologies are described in Appendices E and F.

4 SELECTION OF COAL TECHNOLOGIES

Rationale. Many factors will influence the ultimate means by which military installations reduce their dependence upon natural gas and oil. Within the range of technologies presented in this report, only a few are suitable for consideration. No attempt is being made to identify the optimum process because such optimization would require, among other things, a site-specific approach.

The overview approach taken during this study does allow specific technologies to be excluded from further consideration. This can be done on the basis of economics, mismatch of capacity vs. required quantities of fuel, process complexity, and other factors. A large number of technologies, particularly those under development, can be eliminated in this way, allowing the problem to be defined in less vague terms.

More detailed discussion of the rationale and criteria used to select technologies appears in Appendix B.

Direct Combustion Technologies. Direct combustion of coal is the single most established technology area identified during this study. Both stokers and pulverized coal systems are widely used for commercial, industrial, and power generation purposes. There is no question that one or more direct combustion systems can be tailored to Army installation applications.

Two routes to conversion to coal by existing direct combustion technology have been identified. These are: (1) replacement of natural gas and oil-fired units by new coal-burning units; and (2) conversion of existing natural gas and oil-fired units to coal-fired systems. Each has advantages and disadvanages.

Only one developmental direct combustion technology has been identified as applicable to Army needs. This is the atmospheric fluidized-bed boiler. (The MIUS[5] system, based on fluidized-bed combustion not only of coal, but also of municipal wastes, is not considered applicable to existing installations). Development of the fluidized-bed combustion boiler is being sponsored by the Energy Research and Development Administration; demonstration units exist.

---

[5] *Power and Combustion*, Quarterly Report (Office of Fossil Energy, ERDA, October-December 1975), p 8.

Further discussion of factors affecting military applications for direct combustion of coal appears in Appendix B.

Coal Gasification Technologies. Only low- and medium-Btu gas can be produced by existing gasification technologies. High-Btu processes are under development and commercial facilities are in the planning stages. One operational gasification system exists at Holston Army Ammunition plant but no information could be obtained on this.

The Lurgi and the Koppers-Totzek systems are the two which are most applicable to Army installations in the low- to medium-Btu category. Lurgi has distinct advantages over Koppers-Totzek. None of the developmental processes appear to offer any advantages over these two systems.

All high-Btu systems are developmental. Plans for near-term commercial high-Btu gas production are based upon oxygen-fired Lurgi technology. This was found to be the only near-term process suitable for application; however, economics still may make it unacceptable. Developing technologies selected were the CO_2 Acceptor and HYGAS processes, but the status could change as a result of work on other processes. Further discussion appears in Appendix B.

Coal Liquefaction Technologies. Coal liquefaction technologies have been rejected from consideration because of the complexity of the systems and because, in the size range applicable to Army installations, the economics would be prohibitive. This does not imply that future developments will not occur to change this. One potential application of liquefaction would be implementation as a regional facility supplying numerous bases, but that is not within the scope of work of this study.

5 IMPLEMENTATION STRATEGIES AND IMPACTS

Introduction. The net effect of a change to coal from natural gas and oil will differ for various types of posts and for different posts of the same type. This is due to the wide variety of systems currently in use and to the different use patterns between types of installations. Some elements of the existing systems will remain essentially unchanged while others may be drastically affected. Under certain conditions it may be possible to replace only specific natural gas and/or oil units with coal or coal-derived fuels.

Some items which may be impacted by changes to coal are fuel storage and handling facilities, solid waste disposal, and gas distribution systems. The kind and extent of impact will depend upon the particular coal utilization system installed. Units such as boiler water treatment (demineralization) and centralized district heating systems may be little affected by conversion to coal as a primary fuel. In these cases the type of fuel does not affect the specifications for example, for boiler feedwater or circulating heat transfer medium.

The complex question of impacts resulting from conversion to coal is evident when individual family dwellings are considered. These are invariably natural gas-or oil-fired units. There is no practical way to convert these to coal-fired systems. Conversion of the large centralized boilers will leave them unaffected. Conversion to low-Btu gas generated from coal will require appropriate burner conversion of the large gas-fired heating units but probably will not be advisable for individual dwellings units due to safety considerations. High-Btu gas from coal will have no effect on existing gas-fired units. Essentially the same changes for oil-fired units will be needed for conversion to either high- or low-Btu gas. High-Btu gas can be used without change in natural gas-fired dwelling units.

One major impact resulting from conversion to coal on a large scale may be the need for emission controls. Due to the sulfur and nitrogen content of coal and to atmospheric discharge limitations, pollution abatement may be required for large units and, under extreme conditions, for smaller units as well. Sulfur dioxide from conventional coal combustion may require stack gas scrubbing to reduce discharge levels to acceptable values. Control of furnace temperature and excess air may be necessary for nitrogen oxide reduction. In gasification systems, sulfur and nitrogen will appear in the gas as hydrogen sulfide, ammonia, and organic compounds. Sophisticated techniques are required to remove these components from the fuel prior to distribution.

Coal Handling and Storage Facilities. All coal combustion and conversion technologies require coal receiving, handling, and storage facilities. Some coal preparation, such as crushing, also may be necessary. Regardless of the volume of fuel consumed, the coal must be delivered, transported, stored in open piles or silos, and transferred to units for preparation, combustion, or conversion. Physical space must be available for necessary equipment and storage areas. Environmental impacts include increased dust, noise,, and runoff. Capital expenses, temporary disruptions of operation, and complexity of the operation requiring operator retraining, are other factors that must be considered.

Coal will be delivered either by truck, rail, or barge. Existing transportation lines can be used but an increase in traffic will occur. In other instances, new roads, railroads, or docks may be needed. Increases in traffic can cause congestion, noise, and air pollution. Coal slurry pipelines, at present not in widespread use, could alleviate most of these problems, but capital costs are high, pipelines must be constructed, and impacts such as increased water consumption will be felt.

Equipment must be installed to efficiently unload the fuel shipments. Capability of unloading a 3-day supply of coal in an 8-hour period typically is recommended. Positioning systems are often used for locating and unloading railroad cars. Dump trucks are adequate for road delivery. Coal is then conveyed from the receiving point to storage areas.

Coal is often stored in open piles. Typically a 30 to 90 day inventory of coal is desired to offset strikes, inclement weather, transportation problems, or unanticipated fuel shortages. The pile must be properly constructed to provide for controlled drainage and to limit the danger of fire. Small tractors are often used to maintain a proper coal pile.

The storage pile sometimes is sprayed with oil or polymer or covered to limit weathering and dusting. The area should be either well paved or well drained to minimize runoff. Holding or settling ponds may be needed to restrict water pollution. Protective enclosed storage bins or silos also may be used. Increased capital costs and maintenance are the major drawbacks to closed systems.

Belts, bucket conveyors, or other means of conveyance must be erected for transferring the coal into feed hoppers at the furnace or initial process operation. Small tractors are sometimes used to aid in transferring the fuel. Often coal which is ordered in a desired size, still must be classified and reground. This requires additional equipment such as hammermills, conveyors, and screens. Such processing often increases the need for particulate and noise controls.

In an article in *Power Magazine*, February 1974, a flowchart similar to the one shown in Figure 2 was included. Two scenarios for coal transport, handling, preparation, and storage, applicable to typical Army facilities, have been abstracted from this reference and are discussed below.

In a simple system coal follows the route in Figure 2 identified by A-2-5-6-7-9. Trucks dump the coal in piles which are transferred by bucket elevator to a bunker. From there it is fed by chutes to stoker hoppers.

In a more complex system, where coal is stored outdoors, it is unloaded by track hopper and then transferred by conveyors to crushers which reduce the size of the coal. Screw conveyors send the sized coal to storage piles where bulldozers are used to maintain the pile. The coal is conveyed by bucket elevator to hoppers where it is then fed into the pulverizer unit prior to coal pulverization. This flow is B-2-3-5-7-8-9 in Figure 2. These two systems illustrate the variability of the equipment needed for coal preparation. Each potential application must be closely examined to determine the optimum system from efficiency, economic, environmental, and other impact standpoints.

Direct Combustion Systems. Both implementation strategies and impacts of conversion or replacement of gas- or oil-fired boilers with coal-fired units are presented. Conversion or replacement of oil-and gas-fired boilers to coal-fired systems is expensive and difficult. Numerous factors should be considered to determine the practicability of any alterations.

The first step in conversion of a gas-or oil-fired facility to coal is to determine if the unit can be adapted to burning coal. Space is required for coal transportation, unloading, and storage facilities. Physical constraints in the vicinity of the boiler, such as duct work, building walls, and foundations may restrict alterations or additions. Air emission control equipment such as precipitators and wet scrubbers may be

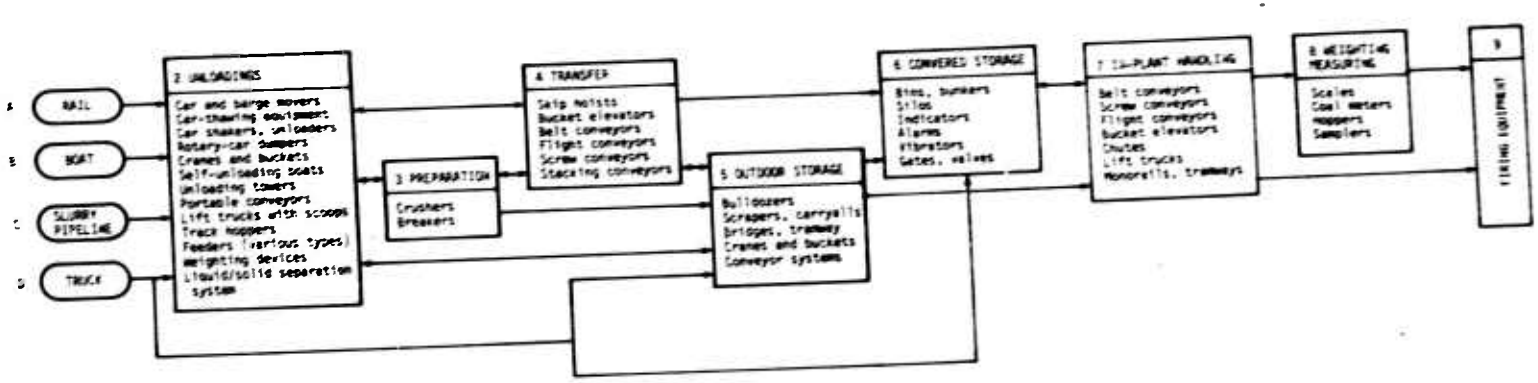

Figure 2. Flowsheet For Coal-Handling Storage and Preparation

necessary. If pulverized coal firing is the selected technology, space is required for erection of pulverization equipment. Ash disposal and storage facilities must be designed and operated effectively.

Conversion of an oil-or gas-fired boiler to coal firing usually results in a reduction of capacity, or "derating," of the boiler efficiency. Boilers are designed for a specific fuel and purpose. Any change in the fuel will affect efficiency. Coal combustion, in contrast to combustion of other fossil fuels, needs increased boiler volume to control slagging and fouling of heat transfer surfaces. Flue gas velocity through tube banks and the tube spacing also affects the degree of derating and varies according to the type of fuel burned.

Historically, the type of coal selected has been mainly dependent upon the geographic location of the steam plant. However, restrictions of sulfur dioxide emissions have made low sulfur coals desirable. If higher sulfur coals are used, expensive SO_2 removal systems may become necessary. Coal selection is typically based upon heating value, moisture content, mineral matter content, grindability (for pulverized coal), ash fusion temperature, and ash chemical characteristics. The heat content of the coal determines the quantity of fuel consumed. Moisture content affects combustion gas weight, gas pass velocity, efficiency, and heat transfer rates as well as degree of low temperature corrosion, of existing units converted to coal firing.

The furnace section of a boiler is designed to supply radiant heat and hot gases to tube banks for convective heating. Pulverized coal-fired burners (as well as oil and gas burners) are usually located in the front face of the boiler. In contrast, coal fed to stokers is placed on a grate across the radiant floor section. Bottom ash is removed from the floor or ash hopper. Precipitators or cyclones reduce flyash emissions through the stack to desirable levels. Soot blowers are required in the tube banks to prevent clogging of the spaces.

Coal-fired furnaces are larger than other furnaces of the same capacity. The furnace, basically a box with a refractory or water tube-lined floor, also has tube-lined walls. At the entrance to the convection section, stack gas temperatures must be at least 100°F below the ash softening temperature. The lower temperature requirement dictates an increase in

radiant surface area. Table 6 indicates comparative furnace dimensions for gas, oil, and coal. Furnace volume is affected by the properties of the specific fuel type and ash properties.

TABLE 6. Comparative Furnace Dimensions*

	Relative Boiler Width	Relative Boiler Length
Gas	1.0	1.0
Oil	1.05	1.2
Coal	1.10	1.5

*A. W. Bell and B. P. Breen, "Converting Gas Boilers to Oil and Coal," *Chemical Engineering* (April 26, 1976).

Gas-, oil-, and coal-fired boilers of identical dimensions hourly produce, for example, 60,000 Btu, 48,000 Btu, and 35,000 Btu, respectively; this is another way of comparing surface area requirements.

By increasing the amount of heat absorbed in the radiant section of the furnace, the flyash temperature can be kept below the softening temperature. Coal particles require a greater combustion time than gas. Therefore, conversion of a boiler from gas or oil to coal would either reduce the load capacity of the boiler, or require additional combustion equipment to increase the radiant heat output.

Pulverized Coal and Stoker-Fired Units. To determine whether to replace or convert oil- or gas-fired boilers with pulverized coal units, detailed study of the boiler is needed. Generalizations, however, can usually be made. Coal-fired boilers that have been converted to oil or gas often can be more easily reconverted. Top-supported boilers are usually more adaptable to conversion than others. Bottom-supported boilers, around 25 years old, are usually better suited for conversion than new boilers, because of more conservative design. However, since the physical condition probably is worse than newer units, additional work will be required to operate the unit efficiently. A rough estimate is that approximately one-third of all non-coal-fired boilers can be converted to coal.

The purpose of the convective section of the boiler is to collect heat from the flue gas. Gas, oil, and coal systems require different flue gas velocities, fins, and tube spacing. Ash is highly abrasive and the flue gas velocity for coal-fired boilers should be approximately 60 ft/sec as opposed to gas-fired flue gas velocities of 120 ft/sec and oil-fired velocities of 100 ft/sec. Conversion of oil or gas to coal requires increased spacing between the tube fins. If these modifications to the convective section are not performed, boiler load capacities may be reduced as much as 50 percent.

Ash deposits on tube surfaces reduce heat transfer coefficients, cause higher power requirements for fans, and increase abrasion of tubes. Soot blowers are used to blast these deposits from the tubes. Either steam, air, or water jets are used. Boilers must be shut down for soot removal by water jets. Although soot blowers are required for both oil and coal, some modification may be necessary during conversion. Switching from gas to coal can cause more serious problems. Installation of blower mechanisms and required clearance between tubes and soot blowers equivalent to approximately half the width of the boiler on each side are the two major complications in this conversion.

The purpose of the burner is to proportion the fuel and air feed, adjust to load change, and stabilize ignition. Gas-, coal-, and oil-fired burners vary in design characteristics and operation. Since the overall efficiency and reliability are dependent upon the burner, replacement is mandatory.

Gas burners, which usually are ring-shaped, are simple to operate and are virtually maintenance free. On the other hand, oil burners must be purged after shut down to prevent caking of the tip and the supply boxes. Frequent inspection of the flame quality is necessary to insure efficient combustion. Routinely, worn parts must be replaced and oil guns cleaned. Neither of these burners can be used with pulverized-coal and stoker systems.

Pulverized coal-fired boilers use finely ground coal that is combined proportionately with air. The burner usually consists of a ceramic quarl, flame-shaping vanes, air registers, and a coal supply tube that feeds into the burner throat. Boilers with capacities less than 200,000 lb/hr of steam, do not normally use pulverized-coal burners. Because the fuel supply lines from the pulverizer to the burner can be eroded by coal and impurities, annual repair or replacement is usually required. Often oil or gas auxiliary burners are required to preheat the furnace prior to initial coal ignition.

Smaller boilers often are stokers despite the disadvantage of incomplete combustion resulting in accumulation of unburned carbon and ash. Efficiency of the boiler can be slightly improved by reinjection into the furnace of recovered carbon particles. An advantage of stoker firing is the ability to burn virtually any solid fuel. The one major exception is caking coals sized to less than 1-1/4 inches in diameter.

Fuel feed systems also must be replaced with more complicated solids handling systems. Additional mechanical equipment is necessary and the abrasive nature of the coal increases maintenance and repair frequency.

Stokers burn coal within specified size limits, but some delivered coal may be outside specifications. Large facilities may install classifiers and crushers to eliminate oversized lumps. This improves fuel economy and minimizes stoker "jamming."

With pulverized coal systems, a variable rate feeder delivers coal into the pulverizer. Coal from the pulverizer is then pneumatically conveyed by exhaust or forced draft fans to the burner. Air is the transport medium from pulverizer to burner. Exhaust fans require increased maintenance due to the abrasive nature of the coal.

There are four basic types of pulverizers; ball mills, impact mills, attrition mills, and roller-and-race mills. Roller-and-race mills generally require replacement biannually. They are economically impractical for units below 3,000 lb per hour. Ball mills are inexpensive. Impact mills (hammer mills) and ball mills have low capital cost per ton of output for small mills and are quieter than others. Although high maintenance costs occur with abrasive coals, hammers are easily replaced. Attrition mills have high rates of repair due to erosion.

Gas- and oil-fired units are designed for pressurized firing operating under a positive pressure of 10-20 inches of water gage; stoker units function under a very slight negative pressure of less than 0.5 inches of water gauge. Induced draft fans, used in addition to forced draft fans, are required for any conversion from gas or oil to coal. In order to couple the forced draft and induced draft fan operation, a differential pressure controller is necessary.

Air preheaters are mandatory for pulverized coal firing. The temperature must be adequate to achieve desired moisture content and air flow. Direct-fired air heaters are used if the preheater cannot achieve the required temperature. Preheaters are optional for stokers (temperature is limited to 350°F to minimize damage to stoker parts). Generally every 100°F rise in air preheat temperature increases the overall efficiency about two percent. Because erosion can be a major problem with coal firing, low alloy steel is used in preheaters, and lower stack gas velocities are necessary for coal-fired units.

There are three basic fuel conversions that can take place: (1) reconverting a boiler back to coal firing, (2) converting original oil-or gas-fired boilers to coal and (3) installation of a new boiler.

(1) Some older boilers originally were coal-fired units but were converted to gas or oil for economic and/or environmental reasons. Stokers were removed, ash pits were eliminated when unnecessary, and new burners were installed. In reconversion from gas back to coal, soot blowers and stack gas controls are necessary. The stoker must be repaired or replaced, new ash handling facilities installed, soot blowers rehabilitated or replaced, and in some cases stack-gas cleaning equipment installed. Necessary auxiliary equipment such as fans, hoppers, foundation modifications, and so forth will also be added. These modifications are in addition to installing basic coal handling, transportation, and storage facilities. One major problem with reconversion is that the original boiler pulverizers, ash-handling system, and other equipment may have been designed for coal with properties different from coal now available.

(2) Units originally fired by oil or gas sometimes can be converted with modifications. Usually these units are large volume boilers, with induced or balanced draft. Oil-fired units usually have soot blowers. Mechanical stoking equipment can be installed with a minimal loss in load capabilities.

Along with installation of the spreader-stoker, duct work must be revised to provide necessary air through the grates and side ports. An ash-handling system including ash pit and

removal equipment must be added. Stack gas control equipment, additional soot blowers, and equipment to increase air feed also is necessary. Basic coal handling, storage, and transportation facilities are essential. Insufficient available space for modifications and downrating of boilers are two limitations to this alternative.

(3) The third option is complete replacement of an oil- or gas-fired boiler system with a coal-fired system. This can be either a prefabricated shop assembled package unit or on-site construction of a coal-fired boiler. Extensive engineering is involved in conversion of a boiler system. Prior to any final decision on conversion, replacement of the entire system should be considered.

Appendix G presents two examples of conversion of oil- or natural-gas-fired boilers to coal.

Fluidized-Bed Combustion. Fluidized-bed combustion (FBC) (Figure 1) currently under development, will require coal receiving handling and storage facilities, and ash disposal capabilities similar to those with other coal-fired operations. Boiler water treatment capabilities at existing installations should be adaptable to the new system.

Conventional oil-, gas-, or coal-fired boilers cannot be converted to fluidized-bed combustion. Proposed FBC units will be prefabricated modules, with capacities of 300,000 lb of steam per hour. For a large centralized system, three of these units would be required. One centralized unit is adequate for smaller bases. Decentralized systems would also require one FBC module.

Since shop-assembled package boilers can be mass-produced, capital costs will be lower. The units are modular, and increases in requirements can be made by addition of one or more modules. Fluidized-bed combustion, which inherently limits sulfur dioxide emissions, eliminates the need for sulfur dioxide stack gas removal equipment. It has been estimated that overall capital costs of the boiler will be 35 percent less than those of conventional coal-fired units. For related reasons, operating costs also should be lower.

Since FBC boiler tubes are in direct contact with the solid particles of the bed, the rate of heat transfer is several times greater than that for conventional boilers, and the units are more compact. This is an advantage where space is at a premium or for future addition of modules to meet increased demand.

Another advantage is increased overall operating efficiency of the boiler. Thus, smaller quantities of cheaper coal can yield the same heat output as more conventional coal-fired units, reducing operating costs.

Fluidized-bed combustion has the additional flexibility of burning an assortment of solid fuels, including solid waste. Coals having a wide range of physical and chemical properties are acceptable. Even low-quality, high-sulfur coals can be burned without danger of slagging.

In order to replace a conventional boiler unit with a multi-cell fluidized-bed boiler, specific equipment additions and modifications are necessary:

- The old boiler must be replaced with FBC modules
- If coal was not previously used, coal handling and storage facilities must be installed.
- Coal-crushing equipment such as hammermills, must be installed to reduce coal to the desired size (maximum 1/4 in.)
- Limestone or dolomite sorbent storage facilities and transfer equipment such as conveyors must be installed.
- Crushers are needed for limestone/dolomite.
- Electrostatic precipitators or other effluent particulate controls must be installed to remove fly ash.
- Fuel and solvent feeders are required.
- Combustion and safety controls must be modified or replaced.

- Bottom ash collection, and spent sorbent removal storage/disposal facilities are needed.

- An ash reinjection system to take the high carbon fly ash from the particulate collector and inject the ash into the carbon burnup cells of the fluidized-bed boilers is necessary.

- The air preheater must be modified.

Coal/Oil Slurries. Burning coal/oil slurries in conventional oil-fired boilers has been proposed to extend oil supplies by combining suspended pulverized coal and oil. This technology is currently in the developmental stage. Coal mixtures are prepared by first pulverizing coal to 70-95 percent through 200 mesh and then mixing the coal with No. 6 residual fuel oil. Additives are used to maintain the coal in suspension. It has been estimated that successful implementation of coal and oil mixtures could reduce imports of oil significantly, but this remains open to question.

Benefits of using coal/oil mixtures include:

- Extension of fuel oil supplies

- Minimal capital expenditure - can be burned in commercial oil-fired boilers.

- Operating cost savings.

- Versatility of operation - oil alone still could be burned.

- Minimal bottom ash formation, meaning reduced disposal requirements.

- No slagging.

Coal is unloaded into the coal storage bin. It is then ground to 70-95 percent through 200 mesh. The pulverized coal then is stored in a supply hopper and fed by conveyor to a mixing tank. No. 6 fuel oil from storage is heated to approximately 100°F and pumped to the mixing tank. An emulsifier may be added to keep the coal in suspension. After mixing, the fuel is conveyed to a slurry hold tank from the proportioning feeder tank. The fuel mixture is approximately 40 percent coal and 60 percent oil. The slurry is pumped through a 300°F slurry preheater into the burners. Combustion air blowers supply air for combustion.

The coal pulverizer requires a cyclone separator and bag house. The hot flue gas from the combustor requires fly ash removal. It is estimated that 99 percent of the ash fed to the boiler is discharged through the stack. There is little bottom ash deposition.

To convert oil-fired units to coal/oil slurries would require establishment of coal-handling, storage, and preparation (including pulverizers) equipment and the fuel mixing equipment discussed in the process description.

It is impractical to convert gas-fired units to oil, and then use the slurry as a fuel, due to potential future shortages of oil. It would be more prudent to convert the units to direct coal firing. Conversion of gas to oil/coal slurries would increase dependence of oil, defeating the objective of independence from oil supplies.

Coal Desulfurization. On-site removal of organic and pyritic sulfur is a potential alternative to stack gas cleaning, use of low sulfur coal, or fluidized-bed combustion. At this time, however, the technology is at such an early stage of development that it is premature to discuss implementation strategies and impacts. Cost is an additional unknown factor.

Summary of Implementation Strategies and Impacts for Direct Combustion of Coal. Tables 7 through 10 list requirements for implementation of the various direct combustion technologies. Also included are corresponding economic, physical, or environmental impacts, resulting from implementation. Generally, coal combustion results in increased particulate and sulfur dioxide emissions, increased physical space requirements, capital expenditures, revamping, relocating or replacement of piping systems, foundations, and building structures, and magnified solid waste production.

In Table 7 stoker-fired boiler technology is discussed. As with all other coal technologies, fuel handling and storage facilities require space, and potentially produce water and air pollution, greater traffic, air pollution, congestion, and so-forth. Modifications or adaptation of boilers can increase maintenance, retraining of operators, capital expenses, replacement of equipment, feed systems, fans, and development of ash-handling and disposal equipment.

Pulverized-coal-fired systems basically require similar types of modification and produce similar impacts. Additionally pulverizing equipment is needed to grind the coal to the proper particle size. This increases noise and dust problems as well as requiring additional space and increased control measures. Improved fuel combustion efficiency and reduced ash are two advantages of this system (see Table 8).

As shown in Table 9, implementation of fluidized-bed combustion necessitates complete replacement of the boiler system in addition to typical coal handling, storage, and preparation systems. Dolomite handling, crushing, and storage equipment is necessary. Increased particulate emissions and solid waste accumulation are the major environmental impacts. Sulfur dioxide levels are minimal, thus eliminating the need for stack-gas-cleaning equipment. The technology, which is still developmental, would require retraining of operators.

TABLE 7. Implementation and Impact of Conversion or Replacement of Oil- or Gas-Fired Units to Stokers

IMPLEMENTATION	IMPACT
A. Evaluate ability to convert facility to coal	A. Physical space requirements, adaptability of system, availability of fuel. output requirements
B. Coal handling and storage facilities, traffic	B. Coal pile runoff, particulate emissions, traffic
C. Coal crushing equipment and storage facilities	C. Particulate emissions, noise
D. Adapt or replace boiler	D. Reduced Btu output capacity, if converting from oil or gas
1. Replace burner, feed system, etc.	1. Increased maintenance due to corrosion and erosion of metal surfaces and plugging of tubes, grates, etc.
2. Add or adjust soot blowers and blower mechanisms	2. More complex fuel system
3. Replace fans	3. Up to 2 years downtime during conversion or replacement, and capital expenditures
4. Revise air feed duct work	4. Increased space requirements for all equipment
5. Change the spacing and fin placement	E. Increased solid waste, runoff, landfill requiremer
6. Install new foundations, support steel, etc.	F. Controls increased particulate and sulfur oxide emissions. May result in solid waste or water pollution
7. Modify or replace combustion and safety controls	G. Particulate, noise pollution, sulfur oxides
E. Ash collection, handling and disposal equipment, structural modifications	H. More complex operation
F. Add necessary particulate and sulfur oxide stack-gas-cleaning equipment	
G. Worker health and safety controls	
H. Train operators	

TABLE 8. Implementation and Impacts of Conversion or Replacement of Oil- or Gas-Fired Units to Pulverized Coal-Fired Units

IMPLEMENTATION

A. Evaluate ability to convert facility to coal

B. Coal handling and storage facilities traffic

C. Crushers, pulverizers, and drying equipment, storage facilities

D. Adapt or replace boiler

1. Replace burners, feed systems, etc.
2. Add or adjust soot blowers, blower
3. Replace fans
4. Revise air feed duct work
5. Change tube spacing and fin placement
6. Install new foundations, support steel, etc.
7. Modify or replace combustion and safety controls

E. Ash collection, handling and disposal equipment, structural modifications

F. Add necessary particulate and sulfur oxide stack gas cleaning equipment

G. Worker health and safety controls

H. Train operators

IMPACTS

A. Physical space requirements, adaptability of system, availability of fuel, output requirement

B. Coal pile runoff, particulate emissions, traffic

C. Particulate emissions, noise

D. Reduced Btu output capacity, if converting from oil or gas

1. Increased maintenance due to corrosion and erosion of metal surfaces and plugging of tubes, grates, etc.
2. More complex fuel system
3. Up to two years down-time during conversion or replacement, and capital expenditures
4. Increased space requirements for all equipment

E. Increased solid waste, runoff, landfill requirements

F. Controls increased particulate and sulfur oxide emissions. May result in increased solid waste or water pollution

G. Particulate, noise pollution, sulfur oxide

H. More complex operation

TABLE 9. Implementation and Impact of Conversion or Replacement of Oil- or Gas-Fired Units to Fluidized-Bed Boiler

A. Evaluate ability to convert facility to coal	A. Physical space requirements, adaptability of system, availability of feed, output requirements
B. Coal handling and storage facilities coal	B. Coal pile runoff, particulate emissions, traffic
C. Crushers, storage facilities	C. Particulate emissions, noise
D. Replace boiler	D. High capital expenditures
E. Sorbent handling and storage facilities, crushers, feeders, etc.	E. Particulate emissions, noise
F. Install ash reinjection system	F. No major impact other than expenditures
G. Replace combustion and safety controls	G. No major impact other than expenditures
H. Ash and spent sorbent handling and disposal facilities	H. Increased solid waste, runoff, landfill requirements
I. Add necessary particulate stack gas cleaning equipment	I. Control particulate emission. May result in increased solid waste or water pollution
J. Worker health and safety controls	J. Reduced noise, particulate matter
K. Train operators	K. More complex operation, new technology

TABLE 10. Implementation and Impact of Conversion or Replacement of Oil- or Gas-Fired Units to Coal/Oil Slurry

IMPLEMENTATION	IMPACTS
A. Evaluate ability to convert oil facility to coal/oil slurry	A. Physical space requirements, adaptability of system, availability of feed, output requirements
B. Coal handling and storage facilities, traffic	B. Coal pile runoff, particulate emissions, traffic
C. Coal crushers, pulverizers, storage and feed systems	C. Particulates emissions, noise
D. Coal/oil mixing systems including tanks and feed lines	D. No major impacts known except expenditures
E. Burner modifications	E. Occasional clogging of burners
F. Ash handling and disposal equipment	F. Increased solid waste, runoff, landfill requirements
G. Add necessary particulate and sulfur oxide, cleaning equipment	G. Controls increase sulfur oxide and particulate emissions, which may result in increased solid waste or water pollution
H. Worker health and safety controls	H. Reduced noise, sulfur oxides, particulate matter
I. Train operators	I. More complex operation

Coal/oil slurry technology, also under development, similarly requires coal handling, storage, and preparation facilities. Conversion of oil-fired systems, the units which can be practically converted, requires burner modifications, coal/oil mixing systems, and additional solid waste control and disposal equipment (Table 34).

Coal-Derived Gas. Systems for replacing natural gas and oil with synthetic gas derived from coal have been described previously. Of those potentially applicable to military needs, only the Koppers-Totzek and Lurgi processes for low-Btu gas have been commercially proven. Lurgi high-Btu gas production is expected to be commerically demonstrated in the near future, and HYGAS and CO_2 Acceptor, under development, are potential second-generation systems.

Commercially Available Processes. Only low- and medium-Btu gasification systems have been commercially established. Any conversion to gas from coal in the immediate future will necessarily be based on low-Btu technology. Two systems previously identified as compatible with Army installation needs are Koppers-Totzek and Lurgi. Koppers-Totzek has the advantage of operating at sufficiently high temperatures to avoid formation of significant amounts of tar and oil. Lurgi has the advantage of operating on air for low-Btu gas production.

Implementation of either of these systems to replace natural gas and oil will require changes in existing equipment and operations. Substitution of low- or medium-Btu gas will impact the end-use equipment as well as requiring installation of the gas-producing system. Conversion to coal-derived gas for fuel will require evaluation of many factors. These will include selection of the appropriate process, design and installation of the system, modification of existing equipment, utilization of the system, and potential future alterations to the system.

In selecting the most appropriate system for a given facility, both technical and economic factors must be identified. For gas from coal, items of major consideration will include the gas heating value and composition, process complexity, coal, water, and other resource requirements, and capital and operating costs associated with the system. Table 11 lists the major technical factors for Koppers-Totzek and Lurgi as applied to large and medium Army facilities. Included in these compilations are gasifier conditions, estimates of the number and size of gasifiers required for each system,

TABLE 11. Technical Factors, Low-Btu Gasification

TECHNICAL FACTORS	KOPPERS-TOTZEK			LURGI		
Product Gas Heating Value	300 Btu/SCF			230 Btu/SCF		
Gas Components (Vol. %)	CH_4 0.1 H_2 32.6 CO 60.9 CO_2 5.2			CH_4 11.2 H_2 5.0 CO 19.5 CO_2 29.0		
Processing Steps	Coal Drying and Pulverizing Oxygen Generation, Steam Generation Gasification, Waste Heat Recovery Quench Sulfur Removal and Recovery Gas Cooling and Compression Slag Quench and Disposal Slag Quench Water Treatment			Coal Drying and Crushing Steam Generation, Air Compression Gasification, Waste Heat Recovery Quench Sulfur Removal and Recovery Gas Cooling, Pressure Reduction Ash Quench and Disposal Ash Quench and Gas Quench Water Treatment		
Gasifier Conditions	2700°F, 1 atm.			1100°F to 1400°F, 285 psia		
Overall Thermal Efficiency	55 to 70%			70 to 75%		
Steam to Gasifier	0.18 lb H_2O/lb Coal			0.60 lb H_2O/lb Coal		
Air/Oxygen	0.68 lb O_2/lb Coal			1.4 lb Air/lb Coal		
Coal Required, Peak Month, Tons Per Day	Lignite 8000 Btu/lb	Subbituminous 10000 Btu/lb	Bituminous 12000 Btu/lb	Lignite 8000 Btu/lb	Subbituminous 10000 Btu/lb	Bituminous 12000 Btu/lb
Large Instal. 5×10^{12} Btu/yr	1850	1490	1240		1385	1150
Medium Instal. 5×10^{11} Btu/yr	185	149	124	173	139	115
Gasifier Required K-T: 400 TPD and 800 TPD Lurgi: Coal @300 lb/hr-ft^2, 6', 9', and 12' diam.						
Large Instal. 5×10^{12} Btu/yr	20800 TPD 10400 TPD	20800 TPD	10800 TPD 10400 TPD	6' diam 9' diam 12' diam	18 8 5	14 6 4	12 5 3
Medium Instal. 5×10^{11} Btu/yr	NA	NA	NA	6' diam 9' diam 12' diam	2 NA NA	2 NA NA	2 NA NA

NOTE:

The capacity of a single Koppers-Totzek Unit exceeds the capacity requirements for medium-sized Army installations

and estimated overall thermal efficiency. Quantities of coal and gasifier size and number have been estimated for "typical" lignite, subbituminous, and bituminous coal heating values.

In addition to direct process factors, conversion to low-Btu gas from coal will require numerous ancillary systems and equipment. Table 12 presents a listing of major factors in this category. Lurgi and Koppers-Totzek both require coal receiving and preparation facilities. An oxygen plant will be required for Koppers-Totzek. Water and wastewater treatment systems will be needed, with Lurgi requiring somewhat more extensive wastewater treatment. Solid waste disposal facilities or contract removal by private waste disposal contractors also are necessary. Cooling water is needed in both systems. Cooling towers may be an additional requirement.

Conversion to low- or medium-Btu gas will entail modifications to existing equipment. Natural gas has a heating value on the order of 1000 Btu/SCF while the low- or medium-Btu replacements considered here have 200 to 500 Btu/SCF. Thus two to five times low- or medium-Btu gas is required for the same total heat release.

Existing gas-fired equipment will require modifications to or replacement of the burners to permit combustion of the greater volume of fuel. Under some conditions, stack modifications also may be required. Local gas distribution systems generally operate at pressures of 10 psi or less. In order to achieve the higher flow rates needed to compensate for the reduced heating value, higher pressures may be necessary. Depending upon the individual distribution system capabilities, this may lead to the replacement of part or all of the piping, pressure reducers, valves, gauges, and controllers.

Oil-fired equipment will require burner modification or replacement and, in addition, will require installation of gas mains to the site. Coal-burning furnaces, if converted to gas, will require extensive modification. Alternatively, it may be more practical to retain coal-fired equipment unchanged. Table 13 lists activities necessary to convert existing equipment to low- or medium-Btu gas.

Operation of the system and utilization of the fuel gas constitute another category of factors to be considered in implementing low-Btu gas from coal. Table 14 identifies major items of the class.

TABLE 12. Process Factors, Low-Btu Gasification

GASIFICATION INSTALLATION

	Koppers-Totzek	Lurgi
Coal Receiving and Storage	Rail, Barge or Truck Delivery Open Storage, 30-90 days, Acres or Silo storage Stockpile feed and reclaim	Rail, Barge or Truck Delivery Open Storage, 30-90 days, Acres or silo storage Stockpile feed and reclaim
Coal Preparation	Coal crushed, dried, and ground to 70% 200 mesh Dust control equipment	Coal is dried and crushed to 1 3/4 x 3/16 Caking coals are pretreated
Gasifier System	Entrained bed, oxygen fired, slagging operation Requires oxygen plant Low pressure operacion, /atm. Gas requires quench, particulate removal, sulfur removal, cooling, and compression	Fixed bed, air fired Pressurized system, 15-20 atm. Gas requires quench, tar and oil removal, sulfur removal, cooling
Water and Wastewater Facilities	Low pressure steam to gasifier requires minimal boiler feed-water treatment Quench water contains only particulates, essentially no organics. Slag quench water contains only slag.	Moderate to high pressure steam to gasifier may require high amount of boiler feedwater treatment Quench water contains tars and and oils, particulates. Ash quench water contains ash and unburned coal.
Solid Waste Facilities	Slag (non-leaching), sulfur	Ash (leachable), sulfur
Air Pollution Control Facilities	Required for particulate and sulfur removal	Required for particulate and sulfur removal
Utilities	Steam required, low pressure Oxygen required Cooling water	Steam required, moderate to high pressure High pressure, air required Cooling water

TABLE 13. Equipment Modifications, Low-Btu Gasification

	Koppers-Totzek	Lurgi
Distribution System	To deliver same heating value per unit volume, pressure must be increased by factor of 3.3.	To deliver same heating value per unit volume pressure must be increased by factor of 5.6.
	Approximately 3.3 times the volume at ST&P required for same heat release	Approximately 5.6 times the volume at ST&P required for same heat release
	Existing distribution system may require modification to operate at higher pressure and flow rate	Existing distribution system may require modification to operate at higher pressure and flow rate
	Where no gas distribution system exists, construction will be required	Where no gas distribution system exists, construction will be required
Gas-Fired Equipment	Burner modification will be required to accomodate the increased gas volume	Burner modification will be required to accomodate the increased gas volume
	Control system modification may be needed	Control system modification may be needed
	Stack modification may be required Boiler derating is likely	Stack modification may be required Boiler derating is likely
Oil-Fired Equipment	Burner replacment or modification needed	Burner replacement or modification needed
	Control system modification required	Control system modification required
	Structural changes to firebox necessary in some cases	Structural changes to firebox necessary in some cases
	Combustion air system and stack modifications required	Combustion air system and stack modifications required
Coal-Fired Equipment	Coal fired equipment either will be retained as is or will require extensive modification or replacement	Coal fired equipment either will be retained as is or will require extensive modification or replacement

TABLE 14. Utilization Factors, Low-Btu Gasification

Utilization Factors	Koppers-Totzek	Lurgi
Safety Considerations	Fuel gas contains 60% CO, Not acceptable for domestic use, May not be acceptable for use in areas devoted to personnel activities. Can be used in isolated boiler to generate steam and hot water.	Fuel gas contains 20% CO. Not acceptable for domestic use, May not be acceptable for use in areas devoted to personnel activities. Can be used in isolated boiler to generate steam and hot water.
Operational Factors	Gas must be pressurized, may need to be dried. Larger volume required for same heat release. Gasifier(s) must operate continuously due to impracticabity of gas storage. Requires Oxygen plant.	Gas generated at high pressure, must be reduced in pressure for distribution, may need to be dried. Gasifiers must operate continuously due to impracticability of gas storage, may operate with one unit under minimum load. Uses air as oxidizer.
	Trained operators required. Total of approximately 4 to 5 men required per shift, plus 1 shift per day coal preparation	Trained operators required. Total of approximately 5 men required per shift, plus 1 shift per day coal preparation.
	Suitable only for completely centralized operation, large scale facility.	May be used in centralized or decentralized configuration in large scale facility. Centralized is preferable. For medium scale facility only centralized operation appears feasible.
	Conversion of system to produce high-Btu gas not attractive due to low Methane content of gas.	Conversion of system to produce high-Btu gas is feasible. Methane content is fairly high. Would require additional gasifiers, oxygen plant, CO shift reactor, CO removed, and Methanatron reactor. Additional coal would be needed as well.
	Can operate on any coal, does not require long term guaranteed supply	Generally restricted to non-caking coals unless pretreatment can be used. Must have long-term supply of coal with specific properties.
Pollution Controls	High temperature operation minimized formation of tars, oils and other organics. Mineral matter is converted to Slag. Waste water treatment consists mainly of solids removal via settling and thickening. Slag is essentially non-leaching. Annonia may be presenting gas quench water stream but at low levels.	Gas exit temperature favors formations of tars, oils and other organics. Ammonia may be formed in significant quanties. Mineral matter exists as ash to ash quench. Gas exits to gas quench. Ash quench water will contain suspended solids and dissolved solids both requires treatment. Gas quench water will require extensive treatment to remove organics, oils, tars, and ammonia. Disposal of tars, oils and organics by recycle to gasifier or by in cineration is required. Recovery of ammonia from water and subsequent incineration may be needed.
	H_2S and sulfur compounds are removed from gas stream. Sulfur recovery is required. Sulfur will be produced in proportion to the amount in the incoming coal. Most practiced method is to produce elemental sulfur.	H_2S and sulfur compounds are removed from gas stream. Sulfur recovery is required. Sulfur will be produced in proportion to the amount in the incoming coal. Most practical method is to produce elemental sulfur.
	Solid wastes are slag and elemental sulfur. Both are inert. Slag can be disposed of in landfill. Sulfur may have market value or can be disposed of in landfill.	Solid wastes are ash and elemental sulfur. Sulfur is inert and disposal by landfill or marketing is possible. Ash may leach, with require sealed landfill disposal site.
	Coal storage, handling, and preparation may require controls. Open storage may produce runoff which must be impounded, settled, and in some cases treated. Silo storage avoids this. Handling, storage and crushing operatioins, produce dust, and particulates which must be controlled to prevent release.	Coal storage, handling and preparation may require controls. Open storage may produce runoff which must be impounded settled, and in some cases treated. Silo storage avoids this. Handling, storage and crushing operations, produce dust and particulates which must be controlled to prevent release.

One key limitation to complete conversion to low- or medium-Btu gas is the presence of carbon monoxide in the fuel. This discourages its introduction into heating systems associated with personnel activities. The toxicity of carbon monoxide restricts application gas to large attended units, physically separated from occupied facilities. Thus a dual gas system is necessary at Army installations which utilize natural gas for heating individual dwellings, barracks, and other personnel buildings.

Specially trained operators will be needed for either of the systems considered. Coal preparation will require one operator, nominally one shift per day. The operation of the gasifiers, subsequent processing train, and various supporting systems will involve four men per shift with Koppers-Totzek and five men per shift with Lurgi. It should be noted that no reduction of boiler operators will occur, since the gas will simply replace natural gas and oil in existing furnaces.

Coal type requirements impose an additional consideration. Koppers-Totzek reportedly can operate with any coal. Thus, suppliers can be varied to achieve optimal price, delivery, and quality to meet changing situations in the future. Lurgi has more stringent coal requirements and with this system it will be necessary either to assure long term coal supplies or to have alternative equivalent sources available.

Pollution controls and environmental considerations differ for the two systems. Both require sulfur recovery units. Lurgi requires more extensive wastewater treatment than Koppers-Totzek. Both systems will require a water supply with Koppers-Totzek reportedly using less water. Cooling towers may be needed to limit thermal discharges. Finally, noise levels associated with solids handling may require control.

Impacts resulting from substitution of low- or medium-Btu gas from coal for natural gas and oil are both favorable and unfavorable. Favorable impacts include the elimination of multiple fuels (coal, oil, and gas) for steam generation at those Army facilities which use more than one fuel. Reliance upon natural gas is reduced, thus reducing the possibility of curtailment and price increases. Similarly, oil consumption is reduced and oil storage facilities can be eliminated, and the chances of price increases or interruption of oil supplies are reduced.

Unfavorable impacts result largely from the complexity of the gasification system and from the need to process solid fuel containing significant levels of impurities. Additional unfavorable impacts result from the differences between low- or medium-Btu and high-Btu gas. These differences, the lower heating value, and the CO content limit low- and medium-Btu applications to specific boilers and may result in dual distribution systems where natural gas is extensively used.

Tables 15, 16, and 17 identify economic, operational, and process-related impacts which will be associated with conversion from natural gas and oil to coal-derived low- and medium-Btu gas. It can be seen that in many cases, implementation and impacts are either identical or are closely related.

Developmental Processes (High-Btu). All high-Btu coal gasification processes must be considered developmental at this time. While there are plans for several commercial high-Btu gasification plants based on Lurgi technology, these facilities have been repeatedly delayed by permit problems and environmental considerations. El Paso Natural Gas and Transco Pipeline have both committed extensive planning, design, time, and other resources to complexes to be located in New Mexico and to serve West Coast market areas. Even under the best of conditions, these facilities stand little chance of being in production during the seventies.

Lurgi technology, however, does appear to be the most available for near-term high-Btu gas production. It will be necessary, of course, to use oxygen instead of air and to include CO shift and methanation units in the system. One added advantage of Lurgi is the potential ability to convert a low-Btu system, installed in the immediate future, to high-Btu service later. This would essentially involve the addition of the units previously mentioned, but allowance for this future change could be made in the initial installation. While this would require modifying existing equipment to burn low-Btu gas followed by a second modification to high-Btu gas operation (in the case of originally natural-gas-fired equipment, this is a reconversion to original state), it is possible that the advantages gained from an early switch away from natural gas and oil could outweigh the dis-

TABLE 15. Economic Impacts, Low-Btu Gasification

- Gasification Plant - Large capital expenditure required. Expected plant life must be 20 years or more to justify installation.

- Supporting Facilities - Existing water supply may need to be increased. Existing wastewater treatment may require expansion or separate treatment plant may be required. Koppers-Totzek will require oxygen plant. Coal storage and preparation plant will be needed. Solid waste disposal area or contract hauling of solid wastes are required.

- Operating Costs - Coal, water, and oxygen or air are required. Five to six operators per shift are needed as well as supervisory personnel. Maintenance, utilities, and insurance costs will add to gas cost.

- Low-Btu Gas Costs - The cost per million Btu of low-Btu gas is greater than the present cost of natural gas and oil. Future price increases could shift this situation, making low-Btu gas more economically attractive. In the event of curtailed supplies of natural gas and oil, cost may not be a factor.

- Other Costs - Modifications to existing gas, oil, and coal-fired equipment and to gas distribution systems will be an indirect cost resulting from use of low-Btu gas. Where gas is used in personnel-occupied buildings, the need to retain natural gas for these services will impose the additional cost of operating separate distribution systems.

TABLE 16. Operational Impacts, Low-Btu Gasification

- Natural Gas-Fired Equipment - Equipment operating on natural gas will require as a minimum burner modifications. Control system changes and alteration to the stack may also be needed. Aside from the initial changes no significant permanent impacts are likely.

- Oil-Fired Equipment - Oil-fired equipment will require replacement of the burners, and probable changes in control and stack systems. No significant permanent impacts are likely.

- Coal Fired Equipment - Major modifications will be needed for coal fired equipment to permit operation on low-Btu gas. Under many sets of conditions, retention of the coal fired equipment unchanged may be the best option.

- Residential/Personnel Units - Due to the CO content of the low-Btu gas conversion of these units does not appear feasible. Whether oil or natural gas fired they will be retained intact.

- Distribution System - Where natural gas is currently not in use, installation of a gas distribution system will be necessary. If an existing system can be adapted to the higher gas volume/pressure it may be used, otherwise, modification or replacement will be indicated. For systems serving residential/personnel units, that portion associated with the personnel buildings must be isolated from the low-Btu gas and retained on natural gas.

- Personnel - No reduction of operating personnel will occur because all converted boilers will still require operators. Additional personnel will be needed to operate the gasification system and support facilities.

- Regulatory Considerations - No Federal regulations have been proposed by the Environmental Protection Agency for Coal distribution plants as of December 31, 1976. State and other local restrictions on discharges from coal, oil, and gas fired equipment may apply in individual cases. In most instances military boiler units will be below the size covered by EPA regulations. Wastewater discharges and solid waste disposal practices will be subject to state regulations.

  Health and Safety regulations, including noise, are covered by OSHA.

TABLE 17. Process Related Impacts, Low-Btu Gasification

- Coal Storage, Handling and Preparation - Receiving facilities adequate to handle code deliveries of up to 2000 TPD for the large case and 200 TPD for the medium case are required. Coal storage for 30 to 90 days supply will occupy 2 to 4 acres of open storage. Coal preparation will include crushing and drying and may include pulverizing.

- Land Requirements - Plant land requirements will be approximately 3 to 5 acres, exclusive of coal storage.

- Energy Consumption - Gasification processes considered range from 70 to 75 percent maximum overall thermal efficiency. Thus if boiler efficiencies are normally 70 to 80 percent for steam generation, the coal utilization efficiency will range from 50 to 60 percent when converted to low-Btu gas, assuming optimal gasification efficiency.

- Solids Disposal - Disposal of ash (Lurgi) or slag (Koppers-Totzek) ranging from 120 to 450 TPD for the large case and from 12 to 45 TPD for the medium case will be required. This will involve establishing an approved landfill site to the facility grounds if the disposal is handled by the installation. The alternative is contract disposal by local hauling firm to approved landfills. Sulfur will also be produced in elemental form, ranging from 20 to 40 TPD for the large case to 2 to 4 TPD for the medium case. While sulfur has potential market value, acutal disposal of sulfur as a saleable commodity will depend upon the specific situation and will require individual evaluation. Since elemental sulfur is inert, landfill disposal or stockpiling will present no problems other than site selection.

- Wastewater Treatment - Koppers-Totzek wastewater used for slag quench and transport will contain suspended solids. Slag should in most cases be unleachable presenting little problem with dissolved solids. Setting and recycle of this water appear feasible. Gas quench water from Koppers-Totzek may contain traces or organics and small quantities of ammonia and sulfide. The latter may require stripping and subsequent treatment or incineration Organics in trace amounts may be compatible with existing wastewater treatment; however, recycle of the water or reuse in the system should be considered.

  Ash quench water from Lurgi will have both suspended and dissolved solids. Recycle after settling and ultimate disposal in final evaporation ponds appears to be the most feasible disposal method. Gas quench water will contain significant quantities of organics tars and oils and ammonia as well as sulfides. It will be necessary to treat this water in a system dedicated to the Lurgi operation before final discharge or reuse.

- Atmospheric Emission - Coal storage, handling, and preparation will all produce dust, and control of particulate emissions will be needed. In addition open storage of coal exposes it to the action of air and water, and runoff from the coal storage area will require impounding and treatment if it is of significant quantities.

  Various vents in the system, if of significant magnitude, may require controls. As an example, tail gas from sulfur recovery units contain SO_2 and if these are excessive will require control such as scrubbing of the SO_2 or recycle to the system.

  Organics removed from quench water will require disposal. Three methods may be used: recycle to the gasifier with feed coal; incineration to CO_2 and H_2O; and contract disposal. Ammonia stripped from the wastewater can, if present in small quantities, be dispersed to the atmosphere. If quantities are too large for effective dispersal, incineration to N_2 and H_2O is possible but requires controls to avoid formation of NO_x. Ammonia may have marketable value, but this is doubtful.

advantage of a second later modification to synthetic high-Btu gas.

All other high-Btu gasification processes must be considered second generation and commercial applications of these are further in the future than Lurgi. The four primary high-Btu processes have been identified as Synthane, BIGAS, CO_2 Acceptor, and HYGAS. Other processes are under development but are at too early a stage to warrant consideration. Pilot plants have been built for all four of the processes named. Successful operation has been achieved for the CO_2 Acceptor and HYGAS pilot plants. The Synthane pilot plant has recently begun operation and BIGAS is approaching the operational stage.

Lurgi high-Btu already has been identified as a potentially applicable technology for Army use. Selection of any of the second-generation processes must be considered arbitrary at this time. CO_2 Acceptor has been selected on the basis of having been successfully piloted, not requiring oxygen, and accepting most coals, and HYGAS is in this category also.

The three cases considered are Lurgi high-Btu, conversion of previously installed Lurgi low-Btu to high-Btu, and CO_2 Acceptor. Because the two Lurgi-based systems have more immediate realization potential, these will be considered together. The second-generation system will be treated separately.

Factors warranting consideration in implementing a conversion to coal-derived high-Btu gas using Lurgi technology are listed in Tables 18, 19, 20, and 21. Except for the need for oxygen, CO shift, and methanation, the Lurgi high-Btu process will require changes almost identical to those needed for the Lurgi low-Btu systems. (Compare these tabulations with Tables 11-14 for Lurgi low-Btu gas). The major differences result from the lower overall thermal efficiency of high-Btu gasification which increases by approximately 17 percent the amount of coal to be processed. This in turn increases the required capacities of most of the equipment and the total number of gasifiers needed. Capital costs are higher due to both the additional processing steps and the increased coal-handling capacity. Conversion of oil- and coal-fired equipment to use high-Btu gas will also be similar to the Lurgi low-Btu case.

TABLE 18. Technical Factors in High-Btu Gasification

	Lurgi High-Btu			Conversion of Lurgi Low-Btu to High-Btu		
Processing Steps	Coal drying and crushing Oxygen Generation, Steam Generation Gasification, Waste Heat Recovery Quench CO Shift Sulfur Removal and Recovery Methanation Gas Cooling, Pressure Reduction Ash Quench and Disposal Ash Quench and Gas Quench Water Treatment			Oxygen Generation CO Shift Methanation		
Gasifier Conditions	1100 to 1400°F, 420 psia			1400 to 1400°F, 420 psia		
Overall Thermal Efficiency	53 to 67%			53 to 67%		
Steam to Gasifier	1.0 lb/lb coal			1.0 lb/lb coal		
Oxygen	0.27 lb/lb coal			0.27 lb/lb coal		
Coal Required, Peak Month Tons per Day (60% Thermal Efficiency)	Lignite 8000 Btu/lb	Subbituminous 10000 Btu/lb	Bituminous 12000 Btu/lb	Lignite 8000 Btu/lb	Subbituminous 10000 Btu/lb	Bituminous 12000 Btu/lb
Large Installation, 5×10^{12} Btu/yr	2170	1740	1450	2170	1740	1450
Medium Installation, 5×10^{11} Btu/yr	220	175	145	220	175	145

TABLE 19. Process Factors in High-Btu Gasification

	Lurgi High-Btu	Conversion of Lurgi low-Btu to High-Btu
Coal Receiving and Storage	Facilities already on-site may require moderate expansion	Facilities already on-site may require moderate expansion
Coal Preparation	Facilities already on-site	Facilities already on-site
Gasifier System	Fixed bed, oxygen fired CO shift, and methanation required	Requires oxygen plant, CO Shift and methanation to be added. Other units on-site
Water and Wastewater Facilities	Facilities already on-site	Facilities already on-site
Solid Waste Facilities	Facilities already on-site	Facilities already on-site
Air Pollution Control Facilities	Particulate and Sulfur Removal required	Facilities already on-site
Utilities	Steam required, moderate to high pressure, Cooling water	Facilities already on-site

TABLE 20. Equipment Modification in High-Btu Gasification

	Lurgi High-Btu	Conversion of Lurgi Low-Btu To High-Btu
Distribution System	Existing Distribution System can be used unchanged	Distribution System must be modified to operate at lower through put and lower pressure.
	Where no distribution system exists, construction will be required	
Gas Fired Equipment	No modifications required	Reconversion of gas fired equipment to operate on high-Btu gas is required Control system modification may be needed.
Oil Fired Equipment	Burner Replacement or Modification Needed Control System Modification Required Structural changes to firebox necessary in some cases	
Coal Fired Equipment	Coal-fired equipment either will be retained as is or will require extensive modification or replacement	
	Combustion air system and stack modifications required	

TABLE 21. Utilization Factors Affecting High-Btu Gasification

	Lurgi High-Btu	Conversion of Lurgi Low-Btu To High-Btu
Safety Considerations	Safety Considerations are those for normal use of natural gas	
Operational Factors	Gas produced at high pressure, must be reduced for distribution. Gasifiers must operate continuously, may operate one unit under medium load. Oxygen required.	
	Trained Operators required, 5-6 men per shift, 1 shift per day coal preparation	Most operators already trained, will need 3-4 additional operation one man per shift
	Centralized operation is preferable.	
	Generally restricted to non-caking coals unless pretreatment can be used must have long term supply of coal with specific properties	

The parallel case, conversion of a previously installed Lurgi low-Btu system to a high-Btu system, has far fewer required changes, since most of these will have been accomplished during the original conversion. In particular, the oxygen, CO shift, and methanation units must be added, as will additional gasifiers. Reconversion of equipment operating on low-Btu gas to high-Btu operation is required. In addition, introduction of high-Btu gas into systems which were excluded from low-Btu gas service (due to the CO content) is possible.

If the orginal low-Btu system is designed for ultimate conversion to high-Btu gas production, the changes needed during that modification can be minimized. Further, the economic factors which include initial low-Btu cost, equipment modifications, interim operating costs, and subsequent conversion to the high-Btu systems and reconversion and modifications of equipment, may favor this two-step approach to high-Btu gas. This will require a detailed site-specific study, however.

Impacts resulting from the conversion to Lurgi high-Btu gasification will also be similar to those described in the low-Btu discussion. Such items as solid waste disposal and wastewater treatment will increase slightly in response to the increased quantities of coal. Somewhat more water will be needed as well. The added operations (oxygen production, CO shift, and methanation) slightly increase the complexity of the system and will necessitate additional manpower. The ability to safely use high-Btu gas in individual dwellings will enable a complete conversion to gas, rather than limited application. If coal-fired units are converted to gas, solid waste handling will be confined to a single source (the gasification system) simplifying collection and disposal. Tables 22, 23, and 24 summarize the impacts identified for these two Lurgi alternatives.

Factors influencing implementation of the CO_2 Acceptor process to high-Btu gas production for military applications are listed in Tables 25 and 26. The effect of using CO_2 Acceptor are the same as those resulting from Lurgi high-Btu implementation. The major factors warranting consideration are the disposal of solid waste, both ash and spent dolomite, the complexity of the high-temperature transfer of solids between the reactor and regenerator, and the possible limitations on the type of coal which is acceptable.

TABLE 22. Economic Impacts, Lurgi High-Btu Gasification

- Gasification Plant - Large capital expenditure required. Expected plant life must be 20 years or more to justify installation.

- Supporting Facilities - Existing water supply may need to be increased. Existing wastewater treatment may require expansion or separate treatment plant may be required. Oxygen plant is required. Coal storage, and preparation plant will be needed. Solid waste disposal area is required, or contract hauling of solid wastes.

- Operating Costs - Coal, water and oxygen are required. Eight to ten operators per shift are needed as well as supervisory personnel. Maintenance, utilities, and insurance costs will add to gas cost.

- High-Btu Gas Costs - The cost per million Btu of high-Btu gas is greater than the present cost of natural gas and oil. Future price increases could shift this situation, particularly deregulation of natural gas. In the event of curtailed supplies of natural gas and oil, cost may not be a factor.

- Other Costs - Modifications to existing oil, and coal fired equipment will be an indirect cost resulting from use of high-Btu gas.

TABLE 23. Process Related Impacts, Lurgi High-Btu Gasification

- Coal Storage, Handling and Preparation - Receiving facilities adequate to handle coal deliveries of up to 2000 TPD for the large case and 200 TPD for the medium case are required. Coal storage for 30 to 90 days supply will occupy 2 to 4 acres of open storage. Coal preparation will include crushing and drying and may include pulverizing.
- Land Requirements - Plant land requirements will be approximately 3 to 5 acres, exclusive to coal storage.
- Energy Consumption - Gasification processes considered range from 70 to 75 percent maximum overall thermal efficiency. Thus if boiler efficiencies are normally 70 to 80 percent for steam generation, the coal utilization efficiency will range from 50 to 60 percent when converted to low-Btu gas, assuming optimal gasification efficiency.
- Solids Disposal - Disposal of ash Lurgi ranging from 120 to 450 TPD for the large case and from 12 to 45 TPD for the medium case will be required. This will involve establishing an approved landfill site to the facility grounds if the disposal is handled by the installation The alternative is contract disposal by local hauling firm to approve landfills. Sulfur will also be produced in elemental form, ranging from 20 to 40 TPD for the large case to 2 to 4 TPD for the medium case. While specific situation and will require individual evaluation. Since elemental sulfur is inert, landfill disposal or stockpiling will present no problems other than site selection.
- Wastewater Treatment - Ash quench water from Lurgi will have both suspended and dissolved solids. Recycle after settling and ultimate disposal in final evaporation ponds appear to be the most feasible disposal method. Gas quench water will contain significant quantities of organics tars and oils and ammonia as well as sulfides. It will be necessary to treat this water in a system dedicated to the Lurgi operation before final discharge or reuse.
- Atmospheric Emission - Coal storage, handling, and preparation will all produce dust, and control of particulate emissions will be needed. In addition open storage of coal exposes it to the action of air and water, and runoff from the coal storage area will require impounding and treatment if it is of significant quantities.

  Various vents in the system, if of significant magnitude, may require controls. As an example, tail gas from sulfur recovery units contain SO_2 and if these are excessive will require control such as scrubbing of the SO_2 or recycle to the system.

  Organics removed from quench water will require disposal. Three methods may be used: recycle to the gasifier with feed coal; incineration to CO_2 and H_2O; and contract disposal. Ammonia stripped from the wastewater can if present in small quantities, be dispersed to the atmosphere. If quantities are too large for effective dispersal, incineration to N_2 and H_2O is possible but requires controls to avoid formation of NO_x. Ammonia may have marketable value, but this is doubtful.

TABLE 24. Operational Impacts, Lurgi High-Btu Gasification

- Natural Gas-Fired Equipment - No impacts
- Oil-Fired Equipment - Oil-fired equipment will require replacement of the burners, and probable changes in control and stack systems. No significant permanent impacts are likely.
- Coal-Fired Equipment - Major modifications will be needed for coal fired equipment to permit operation on high-Btu gas. Under many sets of conditions, retention of the coal fired equipment unchanged may be the best option.
- Residential/Personnel Units - Oil fired units will require alterations to burners or replacement.
- Distribution System - Where natural gas is currently not in use, installation of a gas distribution system will be necessary.
- Personnel - No reduction of operating personnel will occur because all converted boilers will still require operators. Additional personnel will be needed to operate the gasification system and support facilities.
- Regulatory Considerations - No Federal regulations have been proposed by the Environmental Protection Agency for Coal gasification, plants as of December 31, 1976. State and other local restrictions on discharges from coal, oil, and gas fired equipment may apply in individual cases. In most instances military boiler units will be below the size covered by EPA regulations. Wastewater discharges and solid waste disposal practices will be subject to state regulations. Health and Safety regulations, including noise, are covered by OSHA.

TABLE 25. Process Factors, CO_2 Acceptor Gasification

Coal Receiving and Storage	Rail, barge, and truck delivery Storage, 30-90 days supply open coal piles or silos Stockpile feed and reclaim
Coal Preparation	Coal dried and ground to 1/8" x 0. Dust Control Equipment
Acceptor	Requires receiving facility, bin or silo storage Crushing and transport
Gasifier System	Complex high temperature solids transfer Air Fired Gas requires particulate and sulfur removal and methanation cooling
Water and wastewater facilities	Low organics content of water used in process reduces treatment
Solid Waste Facilities	Ash and spent dolomite may leach sulfur
Air Pollution Control Facilities	Required for particulate and sulfur removal
Utilities	Steam and cooling water

TABLE 26. Utilization Factors CO_2 Acceptor

Utilization Factors	CO_2 Acceptor Gasification
Safety Considerations	Can replace natural gas with no changes. Oil and coal must be modified.
Operational Factors	Gas generated at moderate pressure, must be reduced in pressure for distribution, may need to be dried. Gasifiers must operate continuously due to impacticability of gas storage, may operate with one unit under minimum load. Uses air as oxidizer.
	Trained operators required. Total of approximately men required per shift, plus shift per day coal preparation.
	Suitable only for completely centralized operation, large scale facility.
	Generally restricted to low rank coals. Must have long-term supply of coal with specific properties.
Pollution Controls	High temperature operation minimized formation of tars, oils and other organics.
	H_2S and sulfur compounds are removed from gas stream. Sulfur recovery is required. Sulfur will be produced in proportion to the amount in the incoming coal. Most practiced method is to produce elemental sulfur.
	Solid wastes are ash, spent dolomite, and elemental sulfur. Both are inert. Ash and dolomite can be disposed of in landfill, but may leach. Sulfur may have market value or can be disposed of in landfill.
	Coal storage, handling, and preparation may require controls. Open storage may produce runoff which must be impounded, settled, and in some cases treated. Silo storage avoids this. Handling, storage and crushing operations, produce dust, and particulates which must be controlled to prevent release.

These tabulations show that, except for minor differences, implementation of each of the high-Btu gasification processes is nearly identical. Similarly, the impacts are essentially the same. Impacts resulting from CO_2 Acceptor are listed in Tables 27 and 28. Process-related impacts are essentially identical to those resulting from Lurgi high-Btu technology (Table 23) and are not repeated here.

TABLE 27. Operational Impacts, High-Btu Gasification

- Natural Gas-Fired Equipment - No impact on natural gas fired equipment.
- Oil-Fired Equipment - Oil-fired equipment will require replacement of the burners, and probable changes in control and stack systems.
- Coal-Fired Equipment - Major modifications will be needed for coal-fired equipment to permit operation on high-Btu gas. Under many sets of conditions, retention of the coal fired equipment unchanged may be the best option.
- Residential/Personnel Units - Oil fired units require modification.
- Distribution System - Where natural gas is currently not in use, installation of a gas distribution system will be necessary.
- Personnel - No reduction of operating personnel will occur because all converted boilers will still require operators. Additional personnel will be needed to operate the gasification system and support facilities.
- Regulatory Considerations - No Federal regulations have been proposed by the Environmental Protection Agency for Coal gasification plants as of December 31, 1976. State and other local restrictions on discharges from coal, oil, and gas fired equipment may apply in individual cases. In most instances military boiler units will be below the size covered by EPA regulations. Wastewater discharges and solid waste disposal practices will be subject to state regulations. Health and Safety regulations, including noise, are covered by OSHA.

TABLE 28. Economic Impacts, High-Btu Gasification

- Gasification Plant - Large capital expenditure required. Expected plant life must be 20 years or more to justify installation.
- Supporting Facilities - Moderate expansion of existing water supply. Existing wastewater treatment may require moderate expansion or separate treatment plant may be required. Coal storage, and preparation plant will be needed. Solid waste disposal area is required, or contract hauling of solid wastes.
- Operating Costs - Coal, water, dolomite, and air are required. Five to six operators per shift are needed as well as supervisory personnel. Maintenance, utilities, and insurance costs will add to gas cost.
- High-Btu Gas Costs - The cost per million Btu of high-Btu gas is greater than the present cost of natural gas. Future price increases could shift this situation. In the event of curtailed supplies of natural gas cost may be a factor.
- Other Costs - Modifications to existing oil and coal fired equipment will be an indirect cost.

6 ECONOMICS OF COAL TECHNOLOGIES

Tables 29 through 35 present cost estimates for the various coal technologies discussed in this study. Capital costs and operating costs are presented where available and practical. Costs listed include coal receiving, storage, preparation, and handling, as well as combustion or conversion technology expenses. Also included are auxiliary equipment such as necessary air pollution control equipment. Capital expenditures include the cost of installation.

When determining whether or not to convert from oil or gas, the price of fuels must be considered. Typical prices for these fuels (December 1976) are shown in Table 36. These prices vary, of course, depending upon location, fuel grade, and numerous other factors, and Table 29 should be considered only to reflect relative costs between oil, gas, and coal.

Economics of Direct Combustion of Coal. Table 29 shows the capital costs for new stokers and pulverizers, as well as the cost of coal-receiving, handling, storage, and preparation equipment. As explained earlier, the coal type, age type and condition of existing equipment, the type of replacement equipment, physical constraints, availability of existing coal-processing equipment, and other factors affect the selection of equipment and the corresponding costs.

Since determination of the cost of converting existing oil- or gas-fired units to coal-firing is unique to the specific situation, estimates of the general conversion of existing facilities to coal are not definitive. These costs vary greatly so that attempts at cost estimating for modification or replacement are estimates at best.

TABLE 29. Capital Costs of Converting to Coal - Near-Term - Direct Combustion

Type of Installation		Cost of Coal Handling Storage and Preparation	Stoker	Pulverizer
Industrial Installations;	Large	1,700,000	900,000	975,000
Industrial Installations;	Medium	130,000	0	0
Personnel Installations;	Large	940,000	2,100,000	2,500,000
Personnel Installations;	Medium	280,000	2,900,000	3,200,000

Cost of equipment includes all auxilliary equipment needed.

NOTE: Due to the fact that conversion costs are extremely variable and are dependent upon the specific situation, estimates of costs of converting existing units are not identified.

TABLE 30. Capital Costs, Low-Btu Gasification

	Koppers-Totzek[1], $5x10^{12}$ Btu/yr			Lurgi Low-Btu, $5x10^{12}$ Btu/yr			Lurgi Low-Btu, $5x10^{11}$ Btu/yr		
	Lignite	Subbituminous	Bituminous	Lignite	Subbituminous	Bituminous	Lignite	Subbituminous	Bituminous
Total Direct Costs	-------	--------	--------	28,520,000	21,390,000	17,830,000	3,681,000	3,681,000	3,681,000
All Indirect Costs	-------	--------	--------	22,680,000	17,010,000	14,180,000	2,908,000	2,908,000	2,908,000
Total Construction	-------	--------	--------	51,200,000	38,400,000	32,010,000	6,589,000	6,589,000	6,589,000
Initial Supplies	-------	--------	--------	15,000	15,000	15,000	2,000	2,000	2,000
Total Plant Cost	95,000,000	70,000,000	60,000,000	51,215,000	38,415,000	32,025,000	6,591,000	6,591,000	6,591,000
Interest (Construction)	14,250,000	10,500,000	9,000,000	7,682,000	5,762,000	4,804,000	989,000	989,000	989,000
Depreciation Base	109,250,000	80,500,000	69,000,000	58,897,000	44,177,000	36,829,000	7,580,000	7,580,000	7,580,000
Working Capital	3,102,000[2]	3,130,000[2]	3,545,000[2]	3,102,000	3,130,000	3,545,000	736,000	745,000	745,000
Total Investment	112,352,000	83,630,000	72,545,000	61,999,000	47,307,000	40,374,000	8,316,000	8,325,000	8,325,000

(1) Total plant cost provided by Koppers-Totzek

(2) From Lurgi Low-Btu Case

TABLE 31. Low-Btu Gas, Lurgi Operating Costs

	5×10^{12} Btu/yr			5×10^{11} Btu/yr		
	Lignite	Subbituminous	Bituminous	Lignite	Subbituminous	Bituminous
Direct Costs	4,492,000	4,629,000	5,535,000	466,000	484,000	571,000
Direct Labor	485,000	423,000	365,000	303,000	303,000	303,000
Maintenance	810,000	810,000	810,000	420,000	420,000	420,000
Overhead & Supplies	416,000	397,000	380,000	283,000	283,000	283,000
Total Direct Cost	6,203,000	6,259,000	7,090,000	1,422,000	1,490,000	1,490,000
Indirect Costs	583,00	558,000	535,000	323,000	323,000	323,000
Fixed Costs	3,969,000	2,977,000	4,482,000	508,000	508,000	508,000
Annual Operating Costs	10,755,000	9,794,000	10,107,000	2,303,000	2,321,000	2,321,000

TABLE 32. Capital Costs, Lurgi High-Btu Gas Gasification

	5×10^{12} Btu/yr			5×10^{11} Btu/yr		
	Lignite	Subbituminous	Bituminous	Lignite	Subbituminous	Bituminous
Total Direct Cost	56,620,000	4[illegible],030,000	37,740,000	9,144,000	6,709,000	6,709,000
All Indirect Costs	44,730,000	34,780,000	29,810,000	7,698,000	5,301,000	5,301,000
Total Construction	101,350,000	78,810,000	67,550,000	17,442,000	12,010,000	12,010,000
Initial Supplies	30,000	30,000	30,000	3,000	3,000	3,000
Total Plant Cost	101,380,000	78,840,000	67,580,000	17,445,000	12,013,000	12,013,000
Interest (Construction)	15,210,000	11,830,000	10,140,000	2,617,000	1,802,000	1,802,000
Depreciation Base	116,590,000	90,670,000	77,720,000	20,062,000	13,815,000	13,815,000
Working Capital	3,783,000	3,848,000	4,384,000	941,000	947,000	998,000
Total Investment	120,400,000	94,520,000	82,100,000	21,000,000	14,760,000	14,810,000

TABLE 33. High-Btu Gas, Lurgi Operating Costs

	5×10^{12} Btu/yr			5×10^{11} Btu/yr		
	Lignite	Subbituminous	Bituminous	Lignite	Subbituminous	Bituminous
Direct Costs	5,427,000	5,557,000	6,629,000	579,000	590,000	692,000
Direct Labor	606,000	606,000	606,000	428,000	428,000	428,000
Maintenance	1,013,000	1,013,000	1,013,000	510,000	510,000	510,000
Overhead & Supplies	520,000	520,000	520,000	365,000	365,000	365,000
Total Direct Cost	7,566,000	7,695,000	8,767,000	1,882,000	1,893,000	1,995,000
Indirect Costs	729,000	729,000	729,000	416,000	416,000	416,000
Fixed Costs	7,858,000	6,111,000	5,238,000	1,352,000	931,000	931,000
Operating Costs	16,153,000	14,536,000	14,734,000	3,650,000	3,240,000	3,342,000

TABLE 34. High-Btu Gas, Capital Costs of CO_2 Acceptor

	5×10^{12} Btu/yr		5×10^{11} Btu/yr	
	Lignite	Subbituminous	Lignite	Subbituminous
Total Direct Cost	27,390,000	32,400,000	4,333,000	5,130,000
All Indirect Costs	21,635,000	25,595,000	3,424,000	4,052,000
Total Construction	49,025,000	57,995,000	7,757,000	9,182,000
Initial Supplies	35,000	35,000	18,000	18,000
Total Plant Cost	49,060,000	58,030,000	7,775,000	9,200,000
Interest (Construction)	7,359,000	8,705,000	1,166,000	1,380,000
Depreciation Base	56,420,000	66,740,000	8,941,000	10,580,000
Working Capital	3,156,000	3,176,000	734,000	728,000
Total Investment	59,576,000	69,920,000	9,675,000	11,308,000

TABLE 35. High-Btu Gas, CO_2 Acceptor Operating Costs

	5×10^{12} Btu/yr		5×10^{11} Btu/yr	
	Lignite	Subbituminous	Lignite	Subbituminous
Direct Costs	4,785,000	4,825,000	538,000	526,000
Direct Labor	550,000	550,000	355,000	355,000
Maintenance	608,000	608,000	320,000	320,000
Overhead and Supplies	368,000	368,000	255,000	255,000
Total Direct Costs	6,311,000	6,352,000	1,468,00	1,456,000
Indirect Costs	572,000	512,000	300,00	300,000
Fixed Costs	3,802,000	4,497,000	603,000	713,000
Operating Costs	10,625,000	11,361,000	2,371,000	2,469,000
Working Capital (50% of total direct)	3,156,000	3,176,000	734,000	728,000

Capital costs for new units can be estimated. The capital costs include the price of equipment, fuel handling, storage and preparation, and the cost of installation which includes both material and labor. All costs encompass the entire process from receiving the coal, fuel preparation, combustion equipment, boilers, and environmental controls. Capital costs of combustion units are manufacturer estimates. Cost of coal handling, storage, and preparation were derived from estimates in *Preliminary Economic Analysis of CO Acceptor Process, Producing 250,000 Millian Standard Cubic Feet Per Day of High-Btu Gas From Two Fuels*, Bureau of Mines, ERDA 1975.

Several assumptions were made in deriving capital costs:

- No coal-handling, storage, and preparation facilities exist on the base.
- Size of selected direct combustion units required are: (1) 3×10^6 Btu/hr, (2) 5×10^6 Btu/hr, (3) 25×10^6 Btu/hr, and (4) 125×10^6 Btu/hr.
- No SO_2 controls are required on direct combustion equipment since the capacities of the units are smaller than those regulated by EPA.
- Electrostatic precipitators are used on all combustion unit stacks.

Economics of Coal Conversion Processes. Economic studies have been made by the Bureau of Mines (in the "Preliminary Economic Analysis" Series) for several coal gasification and liquefaction processes. These have been based on a standard plant size of 250 MSCF/D for gasification plants and 50,000 Bbl/D for liquefaction plants. Capital and operating costs were estimated and the selling price of the product was determined as a function of various rates of return and coal price assumptions used in these studies. Sufficient detail is presented in these studies to permit scale down of the commercially sized plants to capacities applicable to Army use. The exponential relationships, where "r" is the scaling exponent

$$\text{Cost (2)} = \text{Cost (1)} \left[\frac{\text{capacity (2)}}{\text{capacity (1)}} \right]^r$$

was used. The estimates reflect current costs (1976) and can be adjusted for escalation with reasonable reliability.

The processes selected for applicability to Army use are Koppers-Totzek, Lurgi high- and low-Btu, and CO_2 Acceptor high-Btu. (Costs for Koppers-Totzek were obtained from the system licensor and were not available in detail comparable to the other systems.)

To obtain the capital cost of each plant it was necessary to make various assumptions for each process configuration. These assumptions are described in the following pages for each system considered. In addition to the assumptions made, capital costs were estimated for systems operating on lignite, subbituminous, and bituminous coals with nominal heating values of 8000, 10000, and 12000 Btu/lb, respectively.

Koppers-Totzek gasifiers are available on two- and four-burner configurations, handling 400 and 800 TPD of coal, respectively. Two-burner systems are priced at $25,000,000 and four-burner systems at $35,000,000. For lignite, 2 four-burner and 1 two-burner units are necessary. Two four-burner units are needed for subbituminous coal, and one each of the two-burner and four-burner units are needed for bituminous coal.

Capital costs for Lurgi low-Btu gas were developed from the Bureau of Mines studies for high-Btu by deleting sections not needed for high-Btu production. The method used to scale down was based on determining the number and the size of gasifiers needed for each coal. Assumptions made were:

- The thermal efficiency of the process is 65 percent.
- Coal feed rate through the gasifier is 300 lb/hr-sq ft.
- Gasifier diameter is 9 feet.
- CO shift, oxygen, methanation, and utilities services are not needed.
- The exponent, r, in the cited equation was taken as 0.8, as explained in the text.

The Bureau of Mines study assumed 45 gasifiers, each 12 ft in diameter. After determining the number and size required for the estimate the unit gasifier cost used in that study was adjusted by the exponential rule to the smaller size. (The higher than usual exponent was used to allow for greater solids handling contribution to cost). The gasification section was then synthesized using the proportionate contribution of each unit to its total cost in the study. This was followed by a similar treatment for the plant process units, i.e., coal preparation, gas purification, etc. Finally the indirect costs (field engineering, etc.) were added as percent of direct costs to obtain total capital costs.

For Lurgi high-Btu gasification, a similar procedure was used. However, two variations, one considering a completely new installation and the other considering conversion of a previously installed low-Btu system to high-Btu, were treated. Assumptions used for the completely new installation were the same as those used in the Lurgi low-Btu estimate except that the thermal efficiency of the process is taken as 60 percent. In addition, units not included in the low-Btu case (CO shift, methanation, oxygen, etc.) were, of course, included.

The CO_2 Acceptor process presented a simpler situation than Lurgi. Only four gasifiers were specified in the Bureau of Mines study. It was assumed that the same number would be used in the smaller plant and a direct scale-down was used.

Operating costs were patterned on the appropriate studies. Coal prices were assumed as:

- Lignite: $7.00 per ton
- Subbituminous: $9.00 per ton
- Bituminous: $13.00 per ton*

Operating costs include labor, maintenance, overhead, insurance, and depreciation. No by-product credit was assumed. Since these systems are "captive" and are not producing a saleable product, selling price was not calculated.

Table 31 summarizes capital costs for Koppers-Totzek and Lurgi processes generating low-Btu gas. These have been sized to meet total base requirements. Koppers-Totzek is not suitable for scale-down to the medium-sized installation. Operating costs for Lurgi are summarized in Table 32. No operating costs were estimated for Koppers-Totzek.

Based on lignite and subbituminous only

Capital and operating costs for high-Btu gas via the Lurgi system are shown in Tables 33 and 34. Tables 35 and 36 present the corresponding estimates for high-Btu gas using the CO_2 Acceptor process.

Comparison of the estimates in these tables shows that capital investment is, as expected, greater for high-Btu gasification than for low-Btu gasification. Further, Lurgi high-Btu gasification appears to have higher capital requirements than the CO_2 Acceptor. Operating costs are similarly higher for the Lurgi process.

Table 36. Relative Fuel Prices, 1976

Oil:	$13/barrel	($2.00/MBtu)
Gas:	$1/1000 cu ft	($1.00/MBtu)
Coal:	$15/ton	($0.70/MBtu)

7 CONVERTIBILITY OF TYPICAL ARMY BASES

Characteristic Army Bases. Four "typical" military bases have been characterized: large and medium personnel and large and medium industrial. Within these categories, fuel use breakdown by rated capacity of the heating or steam-generating units has been identified together with the number of units in each size range and the total Btu consumption for each size range. A load factor has been applied to allow for probable intermittent operation of the equipment.

Reference to Table 5 shows that the major differences between medium and large personnel installations is in the quantity of small ($>0.75 \times 10^6$ Btu/hr) heating units in use. The number of mid-range units is approximately equal for the two categories. Large units ($>3.5 \times 10^6$ Btu/hr) are fewer in number at the larger posts. This may appear contradictory; however, the two installations selected as data for this analysis actually reflect this situation. For these two categories, total Btu/hr consumed in 0.75 to 3.5 and >3.5 million Btu/hr units is approximately equal, while the consumption in small units differs by a factor of three.

The medium and large industrial installations show no significant difference between number of units and energy consumption in the capacity range less than 3.5×10^6 Btu/hr. In the capacity range $>3.5 \times 10^6$ Btu/hr, however, the large installation has six boilers nominally rated at 125×10^6 Btu/hr and the medium installation has four nominally rated at 25×10^6 Btu/hr. Total energy consumption by the large installation in this size range is approximately ten times as large as that of the medium installation.

Comparing personnel and industrial installations, small-capacity units predominate in the former, and large units are almost exclusively used in the latter.

Conversion Alternatives. The process of matching one or more coal utilization technologies to Army requirements is necessarily site-specific. Some generalizations can be made, however, by considering the reduction in oil and natural gas consumption resulting from conversion to coal as the primary fuel. To make this evaluation, the four typical installations have been used as examples for the various applicable technologies previously discussed.

Rationale and Assumptions. In applying the technologies to the typical installations, the factor which has been used to illustrate the effect is the reduction in oil and gas consumed. Previously it has been stated that not all units on an Army installation are amenable to conversion to certain technologies. This will result in partial conversion in most instances, and one measure of the effectiveness of the conversion to coal is the reduction in oil and gas Btu value consumed.

To carry out this hypothetical evaluation, various assumptions have been necessary. Since the typical Army installations characterized here are not detailed representations of actual installations, the assumptions are of a general nature. The intent is to illustrate the interaction between existing conditions and those which would be realized as a result of conversion to coal.

Assumptions which have been used in this evaluation are:

- Coal utilization at personnel installations is confined to units rated at $>3.5 \times 10^6$ Btu/hr.
- One coal-fired unit is in operation at each of the large and medium industrial installations.
- Large ($>3.5 \times 10^6$ Btu/hr) units are equally divided between oil and gas operation. Of these, 20 percent previously have been converted from coal to oil or gas, and the remainder are originally designed to operate on oil or gas.
- Medium (0.75 to 3.5×10^6 Btu/hr) units have a ratio of 3 to 1 of oil to gas as fuel, 50 percent of these previously have been converted from coal to oil or gas, and the remainder are originally designed to operate on oil or gas.
- Small ($< 0.75 \times 10^6$ Btu/hr) units operate exclusively on oil or gas in the ratio of oil to gas of 1 to 2.
- Conversion of oil or gas to coal operation is feasible for one out of three units having capacities of $>0.75 \times 10^6$ Btu/hr.
- Where feasible, total conversion to coal is assumed.
- Small units ($< 0.75 \times 10^6$ Btu/hr) cannot be converted to direct combustion of coal except through centralized district heating.

Near-Term Alternatives. Direct combustion of coal using pulverized coal or stoker units and production of low-Btu gas by the Lurgi or Koppers-Totzek processes are the most promising near-term technologies. The reduction in oil and natural gas consumption and the numbers of units which can be converted, which must be replaced, and which must remain on oil or gas fuel have been estimated upon the basis of the foregoing assumptions. Reduction in oil and gas consumption also has been estimated. Tables 37, 38, 39, and 40 summarize the effects of implementing the conventional direct combustion of coal and low-Btu gas from coal technologies for the four typical Army installations.

Using the overall fraction of oil, natural gas, and coal reported in Chapter 1, the percent reduction in natural gas and oil consumption has been calculated. This is based on converting all units greater than 0.75×10^6 Btu/hr to coal, either by conversion to coal firing or by complete replacement. Units smaller than 0.75×10^6 Btu/hr are assumed to be non-convertible to coal.

With this hypothetical situation, the oil and gas reduction resulting from conversion to coal at personnel posts ranges from 40 to 70 percent. At industrial installations it is essentially complete--99 percent. The total fuel required increases slightly because of derating when converting oil- and gas-fired units (original equipment) to coal, and somewhat more when converting to low-Btu gas because of the thermal efficiency loss of the gasification process.

There are a number of variations possible. Some of these would permit near-term conversion of the units sized less than 0.75×10^6 Btu/hr as well as the larger units. From the hypothetical example given, it appears that significant reductions in oil and gas consumption can be achieved at personnel installations either by converting only units greater than 0.75×10^6 Btu/hr or by converting all units less than that size. Further discussion of the strategies appears later in this section.

Long-Range Alternatives. Fluidized-bed combustion, coal/oil slurries, and the production of high-Btu gas either by conversion of previously installed Lurgi low-Btu gas or CO_2 Acceptor appear to be the potential long-term alternatives to oil and gas. Utilizing assumptions outlined earlier, Tables 41, 42, 43, and 44 summarize the quantity that can be converted to coal or replaced with coal-based units.

TABLE 37. Convertibility of Medium-Sized Personnel Installations to Coal as a Primary Energy Source: Near-Term Alternatives

Personnel Installation - Medium: 1.5×10^{12} Btu/year (1.425×10^{12} as Oil and Gas, 0.075×10^{12} as Coal)

EXISTING EQUIPMENT		PULVERIZED COAL AND/OIL SLURRY			LOW-BTU GAS		
Type, Number and Capacity of Units	Number of Units on Fuel Currently In Use	Number of Units Convertible	Number of Units to be Replaced	Btu/yr of Oil and Gas Replaced By Coal	Number of Units Convertible	Number of Units to be Replaced	Btu/yr of Oil and Gas Replaced By Coal
3.5×10^6 Btu/hr	1 Coal fired unit @ ($.05 \times 10^{12}$) Btu/yr	0	0		0	0	
45 Units Total	8 Units Converted from Coal to Oil/Gas	8	0	0.44×10^{12}	9	0	0.46×10^{12}
5×10^6 Btu/hr Average Rated Capacity	18 Oil Fired Units	5	13		18	0	
	18 Gas Fired Units	5	13		18	0	
$0.75-3.5 \times 10^6$ Btu/lb	40 Units Converted from coal to Oil or Gas	40	0		40	0	
80 Units Total	30 Oil Fired Units	9	21	0.55×10^{12}	30	0	0.52×10^{12}
3×10^6 Btu/hr Average Rated Capacity	10 Gas Fired Units	3	7		10	0	
0.75×10^6 Btu/hr							
2000 Units Total	670 Oil Fired Units	0	0	0	0	0	0
100×10^3 Btu/hr Capacity	1330 Gas Fired Units	0	0		0	0	

Total Oil and Gas Replaced by Coal, Btu/yr	0.98×10^{12}
Equivalent Btu value of Coal Required	0.98×10^{12}
Total Coal Requirement including Present Coal Use, Btu/yr	1.06×10^{12}
Estimated Annual Coal Required, Tons	
@ 8000 Btu/lb	0.7×10^5
@ 10000 Btu/lb	0.5×10^5
@ 12000 Btu/lb	0.4×10^5

TABLE 38. Convertibility of Large-Sized Personnel Installations to Coal as a Primary Energy Source - Near-Term Alternatives

Personnel Installation - Large: 2.4×10^{12} Btu/year (2.28×10^{12} as Oil and Gas, 0.12×10^{12} as Coal)

EXISTING EQUIPMENT		PULVERIZED COAL AND/OR STOKERS			LOW BTU GAS		
Type, Number and Capacity of Units	Number of Units on Fuel Currently In Use	Number of Units Convertible	Number of Units to Be Replaced	Btu/yr of Oil & Gas Replaced By Coal	Number of Units Convertible	Number of Units to be Replaced	Btu/yr of Oil & Gas Replaced By Coal
$>3.5 \times 10^6$ Btu/lb	2 Coal Fired Units ($.12 \times 10^{12}$)	0	0		0	0	
6 Units Total	4 Units Converted from Coal to Oil or Gas	4	0	0.34×10^{12}	4	0	0.34×10^{12}
5×10^6 Btu/hr Average Rated Capacity	10 Oil-Fired Units	3	7		10	0	
	10 Gas-Fired Units	3	7		10	0	
$0.75-3.5 \times 10^6$ Btu/hr	45 Units Converted from Coal to Oil or Gas	45	0		45	0	
90 Units Total				0.60×10^{12}			0.60×10^{12}
3×10^6 Btu/hr Average Rated Capacity	35 Oil-Fired Units	10	25		45	0	
	10 Gas-Fired Units	3	7		10	0	
$>0.75 \times 10^6$ Btu/hr	2000 Oil-Fired Units	0	0		0	0	
6100 Units Total				0			0
100×10^3 Btu/hr Capacity	4100 Gas-Fired Units	0	0		0	0	

Total Oil and Gas Replaced by Coal, Btu/yr	0.94×10^{12}	0.94×10^{12}
Equivalent Btu Value of Coal Replaced	1.00×10^{12}	1.54×10^{12} at 65% Gasification Efficiency
Total Equivalent Coal Requirement Including Present Coal Use Btu/yr	1.12×10^{12}	1.66×10^{12}
Estimated Annual Coal Required, Tons		
• 8000 Btu/lb	0.7×10^5	1.0×10^5
• 10000 Btu/lb	0.6×10^5	0.8×10^5
• 12000 Btu/lb	0.5×10^5	0.7×10^5

TABLE 39. Convertibility of Medium-Sized Industrial Installations to Coal as a Primary Energy Source: Near-Term Alternatives

AIF/GOCO Installation - Medium: 0.5×10^{12} Btu/Year, (0.435×10^{12} as Oil and Gas, 0.065 as Coal)

EXISTING EQUIPMENT		PULVERIZED COAL AND/OR STOKERS			LOW BTU GAS		
Type, Number and Capacity of Units	Number of Units on Fuel Currently In Use	Number of Units Convertible	Number of Units to Be Replaced	Btu/yr of Oil & Gas Replaced By Coal	Number of Units Convertible	Number of Units to be Replaced	Btu/yr of Oil & Gas Replaced By Coal
$>3.5 \times 10^6$ Btu/lb	1 Coal Unit (0.06×10^{12})	0	0		0	0	
4 Units Total	1 Unit Converted From Coal to Oil or Gas	1			1	0	
25×10^6 Btu/hr Average Rated Capacity	1 Oil-Fired Unit	1	0	0.43×10^{12}	1	0	0.43×10^{12}
	1 Gas-Fired Unit	1	0		1	0	
$0.75-3.5 \times 10^6$ Btu/lb	1 Unit Converted From Coal to Oil or Gas	1	0		1	0	0.009×10^{12}
2 Units Total	1 Oil-Fired Unit	1	0	0.005×10^{12}	1	0	
3×10^6 Btu/hr Average Rated Capacity	0 Gas-Fired Unit	0	0				
$>0.75 \times 10^6$ Btu/hr	25 Oil-Fired Units	0	0		0	0	
80 Units Total	55 Gas-Fired Units	0	0	0	0	0	0
100×10^3 Btu/hr Capacity							

Total Oil and Gas Replaced By Coal, Btu/yr	0.435×10^{12}	0.44×10^{12}
Equivalent Btu value of Coal Required	0.43×10^{12}	0.66×10^{12} at 65% Gasification Efficiency
Total Equivalent Coal Requirements Including Present Coal Use, Btu/yr	0.50×10^{12}	0.73×10^{12}
Estimated Annual Coal Required, Tons		
@ 8000 Btu/lb	0.3×10^5	0.5×10^5
@ 10000 Btu/lb	0.3×10^5	0.4×10^5
@ 12000 Btu/lb	0.2×10^5	0.3×10^5

TABLE 40. Convertibility of Large-Sized AIF/GOCO Installations to Coal as a Primary Energy Source: Near-Term Alternatives

AIF/GOCO Installation - Large: 5.0×10^{12} Btu/year (4.35×10^{12} as Oil and Gas, 0.65×10^{12} as Coal)

EXISTING EQUIPMENT		PULVERIZED COAL AND/OR STOKERS			LOW BTU GAS		
Type, Number and Capacity of Units	Number of Units on Fuel Currently In Use	Number of Units Convertible	Number of Units to Be Replaced	Btu/yr of Oil & Gas Replaced By Coal	Number of Units Convertible	Number of Units to be Replaced	Btu/yr of Oil & Gas Replaced By Coal
3.5×10^6 Btu/hr	1 Coal-Fired Unit (0.64×10^{12})	0	0		0	0	
6 Units Total	1 Unit Converted from Coal to Oil or Gas	1	0		1	0	
125×10^6 Btu/hr Average Rated Capacity	2 Oil-Fired Units	1	1	4.35×10^{12}	2	0	4.35×10^{12}
	2 Gas-Fired Units	0	2		2	0	
$0.75-3.5 \times 10^6$ Btu/hr	2 Units Converted from Coal to Oil or Gas	2	0		2	0	
4 Units Total	1 Oil-Fired Unit	1	0	0.01×10^{12}	1	0	0.01×10^{12}
3×10^6 Btu/hr Average Rated Capacity	1 Gas-Fired Unit	0	1		1	0	
0.75×10^6 Btu/hr	30 Oil-Fired Units	0	0	0	0	0	0
100 Units Total	70 Gas-Fired Units	0	0		0	0	
100×10^3 Btu/hr Capacity							

Total Oil and Gas Replaced by Coal, Btu/yr	4.36×10^{12}	4.36×10^{12}
Equivalent Btu Value of Coal Required for Replacement	4.35×10^{12}	6.69×10^{12} @ 65% Gasification Efficiency 7.34×10^{12}
Total Coal Requirement including Present Coal Use, Btu/yr	5.0×10^{12}	
Estimated Annual Coal Required, Tons		
@ 8000 Btu/lb	3.1×10^5	4.6×10^5
@ 10000 Btu/lb	2.5×10^5	3.7×10^5
@ 12000 Btu/lb	2.1×10^5	3.1×10^5

TABLE 41. Convertibility of Medium-Sized Personnel Installations to Coal as a Primary Energy Source: Long-Term Alternatives

Personnel Installation Medium 1.5×10^{12} Btu/yr (1.425×10^{12} as Oil and Gas, 0.075×10^{12} as Coal

EXISTING EQUIPMENT		FLUIDIZED BED			COAL OIL SLURRY		
Type, Number and Capacity of Units	Number of Units on Fuel Currently In Use	Number Of Units Convertible	Number Units To Be Replaced	Btu/yr of Oil and Gas Replaced By Coal	Number Of Units Convertible	Number Units To Be Replaced	Btu/yr of Oil and Gas Replaced By Coal
3.5×10^6 Btu/hr	1 Coal fied unit (0.05×10^{12} Btu)	0	0		0	0	
46 Units Total	8 Units Converted from Coal to Oil or Gas	0	0	0.44×10^{12}	4	0	0.03 10^{12}
5×10^6 Btu/hr Average Rated Capacity	18 Oil-Fired Units	0	18		8	0	
	18 Gas-Fired Units	0	18		0	0	
$0.75-3.5 \times 10^6$ Btu/hr	40 Units Converted from Coal to Oil or Gas	0	40	0.55×10^{12}	30	0	0.090×10^{12}
80 Units Total		0	30		14	0	
3×10^6 Btu/hr Average Rated Capacity	30 Oil-Fired Units 10 Gas-Fired Units	0	10		0	0	
0.75×10^6 Btu/hr	670 Oil-Fired Units	0	0	0	0	0	0
2000 Units Total	1330 Gas-Fired Units	0	0		0	0	
100×10^3 Btu/hr Capacity							

Total Oil and Gas Replaced by Coal, Btu/yr	0.49×10^{12}	0.13×10^{12}
Equivalent Btu value of Coal Required	0.99×10^{12}	0.13×10^{12}
Total Equipment Coal Requirement, including Present Coal Use, Btu/yr	1.07×10^{12}	0.21×10^{12}
Estimated Annual Coal Required, Tons		
@ 8000 Btu/lb	0.7×10^5	0.1×10^5
@ 10000 Btu/lb	0.5×10^5	0.1×10^5
@ 12000 Btu/lb	0.4×10^5	0.8×10^5

Assumptions

50% of the units converted from coal were converted to oil-fired
All units converted from coal to oil can fire coal/oil slurry
45% of all units originally oil-fired can be converted to coal/oil slurry
30% of Btu's attributable to oil will be replaced by coal in coal/oil slurry
(40% by weight coal)

TABLE 42. Convertibility of Large-Sized Personnel Installations to Coal as a Primary Energy Source: Long-Term Alternatives

Personnel Installation Large 2.4×10^{12} Btu/yr (2.28×10^{12} as oil and gas, 0.12×10^{12} as coal.

EXISTING EQUIPMENT		FLUIDIZED BED			COAL/OIL SLURRY		
Capacity and Number of Units	Number of Units on Fuel Currently In Use	Number Of Units Convertible	Number Units To Be Replaced	Btu/yr of Oil and Gas Replaced By Coal	Number Of Units Convertible	Number Units To Be Replaced	Btu/yr of Oil and Gas Replaced By Coal
3.5×10^6 Btu/hr	2 Coal fired units (0.12×10^{12})	0	0	0.34×10^{12}	0	0	0.038×10^{12}
26 Units Total	4 Units Converted from Coal to Oil or Gas	0	4		4	0	
5×10^6 Btu/hr Average Rated Capacity	10 Oil-Fired Units	0	10		5	0	
	10 Gas-Fired Units	0	10		0	0	
$0.75-3.5 \times 10^6$ Btu/hr	45 Units Converted from Coal to Oil or Gas	0	45	0.60×10^{12}	23	0	0.077×10^{12}
90 Units Total	35 Oil-Fired Units	0	35		16	0	
3×10^6 Btu/hr Average Rated Capacity	10 Gas-Fired Units	0	10		0	0	
0.75×10^6 Btu/hr							
6100 Units Total	2000 Oil-Fired Units	0	0	0	0	0	0
100×10^3 Btu/hr Capacity	4100 Gas-Fired Units	0	0		0	0	

Total Oil and Gas Replaced by Coal, Btu/yr	0.94×10^{12}	0.12×10^{12}
Equivalent Btu value of Coal Required	0.94×10^{12}	0.12×10^{12}
Total Equivalent Coal Requirement Including Present Coal Use, Btu/yr	1.00×10^{12}	0.24×10^{12}
Estimated Annual Cost Required, Tons		
@ 8000 Btu/lb	0.6×10^5	0.2×10^5
@ 10000 Btu/lb	0.5×10^5	0.1×10^5
@ 12000 Btu/lb	0.4×10^5	0.1×10^5

Assumptions

50% of the units converted from coal were converted to oil fired
All units converted from coal to oil can fire coal/oil slurry
45% of all units originally oil fired can be converted to coal/oil slurry
30% of Btu's attributable to oil will be replaced by coal in coal/oil slurry (40% by weight coal)

TABLE 43. Convertibility of Large-Sized Industrial Installations to Coal as a Primary Energy Source: Long-Term Alternatives

Industrial Installation Large EXISTING EQUIPMENT		$5x10^{12}$ Btu/yr ($4.35x10^{12}$ as oil and gas, $0.65x10^{12}$ as Coal) FLUIDIZED BED			COAL/OIL SLURRY		
Capacity and Number of Units	Number of Units on Fuel Currently In Use	Number Of Units Convertible	Number Units To Be Replaced	Btu/yr of Oil and Gas Replaced By Coal	Number Of Units Convertible	Number Units To Be Replaced	Btu/yr of Oil and Gas Replaced By Coal
$3.5x10^6$ Btu/hr	1 Coal fired unit ($0.65x10^{12}$)	0	0		0	0	
6 Units Total	1 Units Converted from Coal to Oil or Gas	0	1		0	1	
$125x10^6$ Btu/hr Average Rated Capacity	2 Oil-Fired Units	0	2	$4.35x10^{12}$	1	0	$0.52x10^{12}$
	2 Gas-Fired Units	0	2		0	0	
$0.75-3.5x10^6$ Btu/hr	2 Units Converted from Coal to Oil or Gas	0	2		1	0	
4 Units Total	1 Oil-Fired Unit	0	1	$0.01x10^{12}$	1	0	$0.0015x10^{12}$
$3x10^6$ Btu/hr Average Rated Capacity	1 Gas-Fired Unit	0	1		0	0	
$0.75x10^6$ Btu/hr							
100 Units Total	30 Oil-Fired Units	0	0	0	0	0	0
$100x10^3$ Btu/hr Capacity	70 Gas-Fired Units	0	0		0	0	

Total Oil and Gas Replaced by Coal, Btu/yr	$4.36x10^{12}$	$0.52x10^{12}$
Equivalent Btu Value of Coal Required	$4.36x10^{12}$	$0.52x10^{12}$
Equivalent Btu Value of Coal Required Including Present Coal Use	$5.0x10^{12}$	$1.17x10^{12}$
Estimated Annual Coal Required, Tons		
@ 8000 Btu/lb	$3.1x10^5$	$0.7x10^5$
@ 10000 Btu/lb	$2.5x10^5$	$0.6x10^5$
@ 12000 Btu/lb	$2.1x10^5$	$0.5x10^5$

Assumptions

50% of the units converted from coal were converted to oil-fired
All units converted from coal to oil can fire coal/oil slurry
45% of all units originally oil-fired can be converted to coal/oil slurry
30% of Btu's attributable to oil will be replaced by coal in coal/oil slurry (40% by weight coal)

TABLE 44. Convertibility of Medium-Sized Industrial Installations to Coal as a Primary Energy Source: Long-Term Alternatives

Industrial Installation - Medium

0.5×10^{12} Btu/yr (0.435×10^{12} as oil and gas, 0.065×10^{12} as Coal)

EXISTING EQUIPMENT		FLUIDIZED BED			COAL OIL SLURRY		
Capacity and Number of Units	Number of Units on Fuel Currently In Use	Number Of Units Convertible	Number Units To Be Replaced	Btu/yr of Oil and Gas Replaced By Coal	Number Of Units Convertible	Number Units To Be Replaced	Btu/yr of Oil and Gas Replaced By Coal
3.5×10^6 Btu/hr	1 Coal-Fired Unit (0.06×10^{12})	0	0		1	0	
4 Units Total							
25×10^6 Btu/hr Average Rated Capacity	1 Units Converted from Coal to Oil or Gas	0	1	0.43×10^{12}	0	0	0.07×10^{12}
	1 Oil-Fired units	0	1		0	0	
	1 Gas-Fired Units	0	1		0	0	
$0.75-3.5 \times 10^6$ Btu/hr							
2 Units Total	1 Units Converted from Coal to Oil or Gas	0	1		1	0	
3×10^6 Btu/hr Average Rated Capacity	1 Oil-Fired Units	0	1	0.005×10^{12}	0	0	0.002×10^{12}
	1 Gas-Fired Units	0	0		0	0	
0.75×10^6 Btu/hr							
80 Units Total	25 Oil-Fired Units	0	0	0	0	0	0
	55 Coal-Fired Units	0	0		0	0	
100×10^3 Btu/hr Capacity							

Total Oil and Gas Replaced By Coal, Btu/yr	0.435×10^{12}	0.072×10^{12}
Equivalent Btu Value of Coal Required	0.435×10^{12}	0.072×10^{12}
Total Equivalent Coal Requirements, Including Present Coal Use, Btu/yr	0.5×10^{12}	0.14×10^{12}
Estimated Annual Coal Required, Tons		
@ 8000 Btu/lb	0.3×10^5	0.04×10^5
@ 10000 Btu/lb	0.3×10^5	0.04×10^5
@ 12000 Btu/lb	0.2×10^5	0.03×10^5

Assumptions

50% of the units converted from coal were converted to oil-fired
All units converted from coal to oil can fire coal/oil slurry
45% of all units originally oil-fired can be converted to coal/oil slurry
30% of Btu's attributable to oil will be replaced by coal in coal/oil slurry
(40% by weight coal)

Also included in these tables are the impacts on oil, gas, and coal consumption of the different alternatives. These calculations are based on conversion or replacement of all non-coal-fired units greater than or equal to 0.75×10^6 Btu/hr. All units smaller than 0.75×10^6 Btu/hr are assumed to be non-convertible economically, or that the fuel savings would be relatively insignificant. The reduction in oil and gas consumption was determined to be 40 to 100 percent in terms of Btu's for fluidized bed or high-Btu gasification. The industrial facilities would be totally converted.

Conversion of oil-fired units to coal/oil slurries can reduce oil consumption up to 24 percent. This is, however, only 5 to 14 percent of the total fuel consumption at the base. It appears that coal/oil slurry combustion would best supplement other coal-fired alternatives to oil and natural gas.

Strategies. Various plans for conversion from oil and gas to coal as the primary fuel at Army installations can be developed. These strategies range from immediately effective changes to long-range plans. Depending upon individual site characteristics, they may result in moderate reduction in oil and gas utilization or total independence from these two fuels. Selection of the most promising strategy will be influenced by economic considerations as well as technical factors. Among the possible strategies which may be developed are:

- Complete or partial conversion of existing equipment to conventional coal-fired systems.
- Installation of centralized coal-fired systems.
- Use of coal/oil slurries in existing equipment.
- Replacement of oil, natural gas, and coal with coal-derived low-Btu gas.
- Installation of Fluidized-Bed Combustion Systems.
- Replacement of oil, natural gas, and coal with coal-derived high-Btu gas.
- Liquid fuels.

Within each of these alternatives several different options may be available.

Complete or Partial Conversion of Existing Equipment to Conventional Coal-Fired Systems. This alternative assumes that no change in the pattern of fuel use will be made with respect to size and location of the heating units. Those units currently operating on oil or gas either will be converted to coal or replaced by new coal-fired systems. Under this strategy small units of less than 0.75×10^6 Btu/hr will remain on oil or gas.

Units rated at greater than 0.75×10^6 Btu/hr may be selectively switched to coal. Conversion may be done in one intensive program, affecting all convertible units at the same time, or it may be phased over a long time span. Immediate alteration of all units capable of being converted would provide a near-term partial reduction in oil and gas consumption.

Those units which are not suitable for conversion will require replacement. This effort will be a longer-term project. It may be logically tied to the expiration of the equipment service life. However, costs of continued operation on higher-priced fuel as opposed to the capital outlay to replace non-depreciated equipment must be compared.

Installation of Centralized Coal-Fired Systems. Large centralized systems may be used to replace several existing units. Expansion of central district heating to include areas not presently served can be used to eliminate individual building installations. Under this strategy, a few large systems could replace numerous medium-sized units.

Small units (less than 0.75×10^6 Btu/hr) used in individual dwellings consume 30 to 60 percent of the personnel base fuel as oil and gas. Replacement of these by a single large, or several smaller, central coal-fired district heating systems will effect a major reduction in oil and gas consumption at personnel installations. This option discontinues the use of all individual oil and gas units and requires a hot water (or other heat transfer medium) distribution system. By installing dual distribution systems, cooling as well as heating can be accomplished.

Use of Coal/Oil Slurries in Existing Equipment. A limited reduction in the amount of oil consumed can be obtained by this option. Its application to all existing large units would result in limited fuel savings. The maximum savings to be realized from this strategy will be less than 30 percent of the original oil. Equipment for preparing the slurry and maintaining the coal in suspension will rule out the use of coal/oil slurries in small units. Ash content also will limit its use.

Replacement of Oil, Natural Gas, and Coal With Coal-Derived Low-Btu Gas. This strategy can be implemented by various tactical means. In one alternative the conversion to low-Btu gas can be an end in itself while a second alternative would use this as the first phase in an ultimate conversion to high-Btu gas from coal.

Converting only to low-Btu gas requires identification of those oil- and coal-fired units which can be converted. In most cases conversion to gas will be feasible. For gas-fired units, burner modifications will be the only major change. Oil-fired units may require, in addition, changes in control systems, while conversion of coal-fired boilers may involve structural modifications. Individual dwelling units probably would not be converted to low-Btu gas. The gas distribution system needed to supply previously non-gas equipment must be installed and the necessary changes made to existing mains which are to be used. Segregation of existing mains continuing to deliver natural gas will be necessary as well.

The gasification plant, together with coal storage and preparation facilities, will be located on a single site. Gas processing will be included. Railroad or truck access for coal delivery and a main to carry the gas to the distribution system must be installed.

This alternative provides a partial reduction of oil and gas dependency for personnel posts. On industrial installations it essentially eliminates the use of natural gas and oil.

The second alternative requires planning for future conversion of the low-Btu gasification system to high-Btu production. Allowance can be made in the initial design for the later increased capacity needed in those unit operations and processes common to both high- and low-Btu systems. All steps needed for the low-Btu alternative are required initially in this variation as well. Additional gasifier capacity similarly

can be built in initially. Installation of units such as an oxygen plant and CO-shift and methanation reactors will be deferred until the later conversion to high-Btu gas is implemented. However, the price escalation which will inevitably occur may favor initially installing the higher capacity equipment for coal preparation, gas cleanup, and other systems which will be used both for low- and high-Btu gas.

When the changeover to high-Btu gas production is made, all units at the installation will be converted to gas-firing. Small natural-gas-fired heaters will need no changes, but oil burners will be modified. Large equipment converted originally to low-Btu gas then will be converted to the high-Btu fuel.

Replacement of Oil, Natural Gas, and Coal With Coal-Derived High-Btu Gas. One strategy for implementing coal-derived high-Btu gasification systems has already been discussed. That is the near-term conversion to low-Btu gas followed by subsequent modifications to produce high-Btu gas.

As a long-range strategy, high-Btu gasification systems may be installed in a single step. This may be phased with the retirement of large obsolete coal- or oil-fired units so that gas-fired replacements would be operated on high-Btu gas. Expansion of the distribution system may be carried out in advance to minimize later disruptions and cost escalation.

After gas is in production, units not then fired by gas could be converted or replaced to eventually eliminate all non-coal fuels.

Installation of Fluidized-Bed Combustion Systems. A long-range strategy consists of planning for replacement of existing equipment with coal-fired fluidized-bed systems. While this technology has not been fully demonstrated, it is presently highly promising. The capacity of the current demonstration module exceeds the requirements of most military bases. However, there appears to be no technical reason to preclude scaledown to more suitable sizes.

Because of the thermal efficiency advantage and the compatibility with application demands, fluidized-bed combustion systems should be evaluated in detail. Suitable size reduction evaluation can be obtained during the immediate future so that when the systems have been fully demonstrated, design and fabrication can begin. Replacement of existing units then could occur.

Alternative tactics at that time could include either centralized district heating served by a single unit or several smaller, decentralized systems. The same changes to small individual dwelling systems will be necessary as with conversion to conventional coal-fired systems.

Liquid Fuels From Coal. While liquid fuels from coal technology has been rejected as applicable to individual Army installations, some future potential exists. The strategy with respect to this option would evaluate the concept of coal liquefaction plant combined with subsequent refining to a range of fuels. This complex could serve as the fuel source for all Army facilities in a given geographic area. Motor vehicle fuels as well as heating fuels would be produced. Evaluation of this concept is not within the scope of this study.

8 CONCLUSIONS AND RECOMMENDATIONS

Conclusions. Several coal technologies exist which can replace natural gas and oil at Army installations. These have been described in previous sections of this report and strategies for implementing them have been presented. Impacts resulting from a change to coal have been identified. Similar information has been assembled for technologies which are not commercially available but may become so within a 5- to 15-year time span.

Alternative forms of direct combustion of coal appear to be a favorable near-term strategy. Economics and the proven status of direct combustion systems are two factors favoring this technology. Various types of equipment are available to meet specific needs. One disadvantage is the need to handle coal at multiple units, but this can be reduced by using centralized systems. Individual dwellings would require conversion to centralized systems to be practically heated by coal.

Low- and medium-Btu gas from coal also warrant consideration. Low- and medium-Btu gas are, for practical purposes, near-term technologies. The advantages include centralizing coal-handling equipment and minimizing the impact upon units presently burning natural gas and oil. Probable incompatibility with individual dwelling units is the major disadvantage. High capital and operating costs will be incurred with low-Btu gas and coal-derived fuels.

High-Btu gas from coal is more widely applicable to Army installations than low-Btu gas and does not impact equipment now using natural gas. Implementation is further in the future than for low- and medium-Btu gas, however, and the economics are less favorable than low-Btu gas.

Fluidized-bed combustion systems appear highly promising for near-term application. District centralization would reduce on-site coal distribution. The modular capabilities permit expansion of a partial system at intervals to match increased needs. No cost data are available but preliminary information indicates significant capital reduction.

Coal/oil slurries do offer some advantages such as minimal capital expenditure, versatility of operations, and extension of fuel oil supplies. However, since coal handling, storage, and preparation equipment are necessary and the probability of future fuel oil shortages exists, it probably would be best to convert the unit to direct coal firing. Further, the actual reduction in oil consumption by this method is limited to well under 25 percent.

Due to a wide variation in coal types, existing equipment, and installation requirements, it is impossible to be specific about convertibility or replacement with coal-based technologies. Coal technology is extremely complex. Requirements and specifications are unique to the individual case being studied. When studied in detail, a technology that may be optimum for one conversion or replacement could simply be physically, technologically, or economically unsuitable in another apparently similar situation. The detail of this study is necessarily general and conclusions about particular situations can be drawn only with extreme caution.

Conclusions based on this study are listed below and apply specifically to Army bases:

- Direct combustion of coal offers the highest thermal efficiency and resultant least fuel consumption of the technologies considered.

- Conventional direct combustion systems are technically proven and economical.

- Fluidized-bed combustion of coal is nearing commercial application, offers several advantages over conventional systems, and appears to be a near-term (3-5 years) alternative to other systems.

- Conversion of existing oil- and natural-gas-fired units to direct coal firing is technically feasible for only a few types of units. This cannot be generally applied and must be considered on a case by case basis.

- Coal-derived gas (low-, medium-, and high-Btu) is economically less favorable than direct combustion at the scale appropriate to Army installation. High-Btu processes are commercially unproven at this time. Low- and medium-Btu processes have more favorable economics but may be less universally applicable than high-Btu processes.

- Coal/oil slurries, as a substitute or supplement for oil, offer insufficient benefits to justify further consideration.

- For direct combustion, district systems are more practical due to the need for coal-handling equipment.

- Coal-derived gas systems are of necessity district-based, with the gas being distributed to existing combustion units.

Recommendations. An immediate effort to reduce oil and gas dependency is indicated by the data presented on military fuel consumption. Specific actions can be taken at present, and preparation for alternatives can begin. Recommendations for immediate consideration include the following strategies:

- Medium- and large-capacity oil and natural-gas-fired units nearing the end of normal useful service should be replaced by conventional coal-fired equipment.

- Units which were originally coal-fired but had been converted to oil or gas should be evaluated on a case by case basis and where feasible, reconverted to coal.

- A program to facilitate and expedite commercial development of the fluidized-bed combustion system should be supported with the objective of achieving the initial application of this technology to Army use within 3 years.

- District centralization of heating systems should be emphasized.

- Long-term availability of coal should be assured by initiating communication with the coal-mining industry, so that projected Army coal consumption can be matched by advanced planning for industry capacity.

For longer-term planning, additional actions should be taken. These are:

- Re-evaluation of coal-derived gas should be a continuing activity, and changes in the status of low-, medium-, and high-Btu processes should be monitored.

- A detailed site-specific study, comparing alternative conversion strategies, including gasification and direct combustion, should be undertaken to define specific technical and economic parameters.

- Re-evaluation of coal-derived liquid fuels should be made for situations other than single installation applications.

The rate at which technology for coal utilization is developing results in a constantly and rapidly changing scenario. This applies to both combustion and coal-derived synthetic fuels. For this reason continuing awareness of the status of coal technology is necessary, and the flexibility to adapt policy to changed conditions must be maintained.

APPENDIX A

COAL CONVERSION TECHNOLOGIES

Introduction. Many processes exist or are under development for the conversion of coal to synthetic gaseous, liquid, and solid fuels. The impetus for this development originates both from the need for alternatives to natural gas and oil and from the need for clean-burning fuels. Some of the technology is sufficiently advanced to be commercially applied, but much is still in the research or development stage. Fuels produced by these processes include high-, low-, and medium-Btu gas, liquid fuels of various grades, and clean-burning coal or char.

The conversion processes have the advantages of producing clean, ash-and sulfur-free coal from solid, contaminated coal, and of using plentiful domestic coal in place of imported foreign fuels or dwindling domestic gas and oil. Unfortunately there are some disadvantages to the conversion of coal to other fuels. Cost, both capital and operating, thermal efficiency, equipment complexity and reliability, raw material requirements, and potential air, water, and solid waste pollution all are factors which may act against use of specific processes in some applications. Generally, part of the coal is used to supply the required process heat, air or oxygen is needed, and the hydrogen needed to liquefy or gasify the coal is obtained from water.

Descriptive information for conversion technologies has been assembled from available sources and is presented in Appendices C through F. The individual process descriptions contain data reflecting the development program, characteristics of a commercially sized facility, narrative process description, and flow sheets. Background information includes the sponsors and developers, funding, current status, and restrictions on coal type. Following this is a listing of technical dat relevant to a large-scale facility. This information is usually based upon conceptual design and presents available raw materials and product quantities, compositions, and characteristics of specific streams (where applicable), and identification of major ancillary operations. (Conceptual designs are plant designs prepared during research and development for the purpose of evaluating the technical and economic feasibility of proposed process systems. The convention has been adopted, by participants in synthetic fuels research and development, to use 250 MSCF per day and 50,000 Bbl per day as standard sizes for high-Btu gasification and liquefaction processes. These are approximately equivalent in Btu content.

No convention is used for low- and medium-Btu processes because the heating value of the fuel gas varies between processes). A brief narrative process description follows, and finally a process flow sheet is included.

Coal Gasification. Natural gas is extensively used at military installations to heat individual buildings and domestic water and to generate steam for large-scale heating service. The gas is purchased from utilities, delivered to the installation by the utility pipeline, and distributed to the various points of use through a local pipeline distribution system. Natural gas is composed almost entirely of methane (CH_4) and has a nominal heating value of approximately 1000 Btu per standard cubic foot (SCF). Small amounts of nitrogen, carbon dioxide, water, and light hydrocarbons may also be present in natural gas.

Coal can be converted to fuel gas by reaction at high temperatures with steam and air or oxygen. Depending upon the pressure, temperature, use of air or oxygen, coal rank, and the reactor configuration, the resulting gas will have varying amounts of H_2, CO, CO_2, CH_4, H_2O, and N_2, and the heating value will range from 100 to 500 Btu/SCF. There are two options for using the coal-derived gas; it can be burned directly as low- or medium-Btu gas, or substitute natural gas can be produced from it by raising the heating value to 950 Btu/SCF or higher by increasing the methane content. In practice the composition of synthetic gas from any process would vary over some range as a result of the factors previously mentioned. The presence of high levels of nitrogen, introduced as a component of combustion air, makes the gas from air-fired processes unsuitable for upgrading to high-Btu gas (unless the combustion reaction is segregated from the gas-producing reactions as in CO_2 Acceptor, for example).

Some of the processes for gasifying coals are commercially available and operating in other countries. Others are under development, with some having pilot plants in operation.

The gaseous product from the gasifier has a higher hydrogen to carbon ratio than that in the coal itself, and to achieve this, hydrogen must be added. Hydrogen is supplied by steam, which is contacted, along with oxygen or air, with coal in the gasifier. Different methods of contacting solid with gaseous streams are used.

There are four types of gasifiers: moving-bed, fluidized-bed, entrained-bed, and molten-bath. Reaction rate and the conversion obtained depend upon factors such as coal characteristics, reactor configuration, operating temperature and pressure, and the oxidizing medium. All available commercial processes have been used to date to produce low- or medium-Btu gas. However, addition of a methanation step can produce high-Btu pipeline gas. Except for the Lurgi gasifier, which operates at a pressure of 20 to 30 atmospheres, commercial gasifiers operate at or near atmospheric pressure. Higher pressures are used in the developing processes. Gasifier operating temperatures vary from 1100 to 3600°F. It should be noted that higher pressures and lower temperatures result in higher methane content, and lower pressures and higher temperatures result in a higher H_2 and CO (synthesis gas) content in the product gas. Table A1 shows commercial processes and Table A2 shows typical processes under development along with the type of bed and the developer of each process. The first four processes in Table A1 have are commercial and addition of a methanation step in the Lurgi process can produce high-Btu pipeline gas.

Gasification Processes. Coal is used as a source of low- and medium-Btu gas in most parts of the world. In the United States, natural gas displaced coal-derived gas in the late 1940's when construction of transcontinental pipelines began. In many foreign countries gas is still being manufactured from coal. Various grade of gas for different purposes have been produced in the gas generators previously and presently in use.

Current development efforts on low- and medium-Btu gas processes are directed toward: producing a fuel gas for high temperature combined gas-steam turbine electric generators; producing fuel gas for captive industrial use; and producing synthesis gas for chemical processing. If low- or medium-Btu gas is substituted for natural gas, burner modifications will be required to allow for the higher volume of fuel needed to yield the same Btu content.

Production of low- and medium-Btu gas from coal basically involves reacting the coal with steam and oxygen, quenching to remove condensibles and solids, removing sulfur compounds, and finally either cooling prior to use or using the hot gas directly as fuel. Air may be the oxygen source. Depending upon process conditions and equipment, quenching and cooling

TABLE A1. Commercial Gasification Processes

Processes	Developer	Type of Reactor	Btu Content
Lurgi	Lurgi Mineralotechnik Gmbh	Moving Bed	Low and High
Kopper-Totzek	Heinrick Koppers Gmbh	Entrained Bed	Low
Winkler	Davy Powergas, Inc.	Fluidized Bed	Medium
Wellman-Galusha	Wellman Engineering Co.	Moving Bed	Low and High
Babcock-Wilcox(1)	Babcock & Wilcox Co.	Entrained Bed	---
Riley-Morgan(1)	Riley Stoker Corp.	Moving Bed	---
Gas Inegrale/ Woodall Duckham(1)	Woodall-Duckham Co.	Moving Bed	---
Rummel/Otto(1)	Dr. C. Otto & Co.	Entrained Bed	---

(1) Data for these systems could not be obtained, and they are included for reference.

TABLE A2. Developing Gasification Processes

Processes	Developer	Type of Reactor
1. BIGAS	Bituminous Coal Research, Inc.	Entrained Bed
2. HYGAS	Institute of Gas Technology	Fluidized Bed
3. Synthane	Pittsburgh Energy Research Center of ERDA	Fluidized Bed
4. CO_2 Acceptor	Conoco Coal Development Co.	Fluidized Bed
5. Hydrane	Pittsburgh Energy Research Center of ERDA	Entrained Bed
6. Molten Salt	M. W. Kellogg Co.	Molten Salt Bath
7. Agglomerating Burner Process	Battelle Memorial Institute	Fluidized Bed
8. Westinghouse	Westinghouse Research Laboratories	Fluidized Bed
9. Combustion Engineering	Combustion Engineering, Inc.	Entrained Bed

1-7: High Btu processes

8: Low Btu processes

9: Low Btu fuel gas processes used for electric power generation

may be optional. A general schematic is shown in Figure A1. Each process (commercially available and under development) has specific variations which affect the composition and heating value of the product, and the applicability of the process to individual uses. Coal rank and preparation requirements, supporting services and utilities, and equipment capacities are also affected. Several low- and medium-Btu processes can be used to produce high-Btu gas by using oxygen instead of air and including additional operations.

The major processing steps required for low-Btu gas production are:

- Coal Preparation: crushing and/or grinding, drying, and size classification.
- Gasification: reaction of the coal carbon with steam and oxygen to form H_2, CO, CO_2, and CH_4.
- Quench and Clean Up: cooling and removal of particulates, oils, and tars.
- Sulfur Removal: removal of H_2S, SO_2, and other sulfur compounds from the gas.

In addition to these operations, supporting services and utilities are required. These include steam generation, cooling water supplies, water and wastewater treatment, solid waste disposal, and sulfur recovery (conversion of H_2S to sulfur for sale or disposal).

Currently the commercial low- and medium-Btu processes of greatest interest are Lurgi, Winkler, and Koppers-Totzek. Descriptions of these and other processes as individual process descriptions are discussed in Appendix C.

High-Btu Gasification Processes. To date no commercial facility for producing high-Btu gas has been operated in the United States. Test production of high-Btu gas has been accomplished with American coals in a Lurgi gasifier in Europe, and several commercial plants based on Lurgi technology are in the planning stage by American industry. Pilot operations based on developing processes have been successful in yielding an acceptable product, and semi-commercial demonstration of one of these processes is likely in the near future.

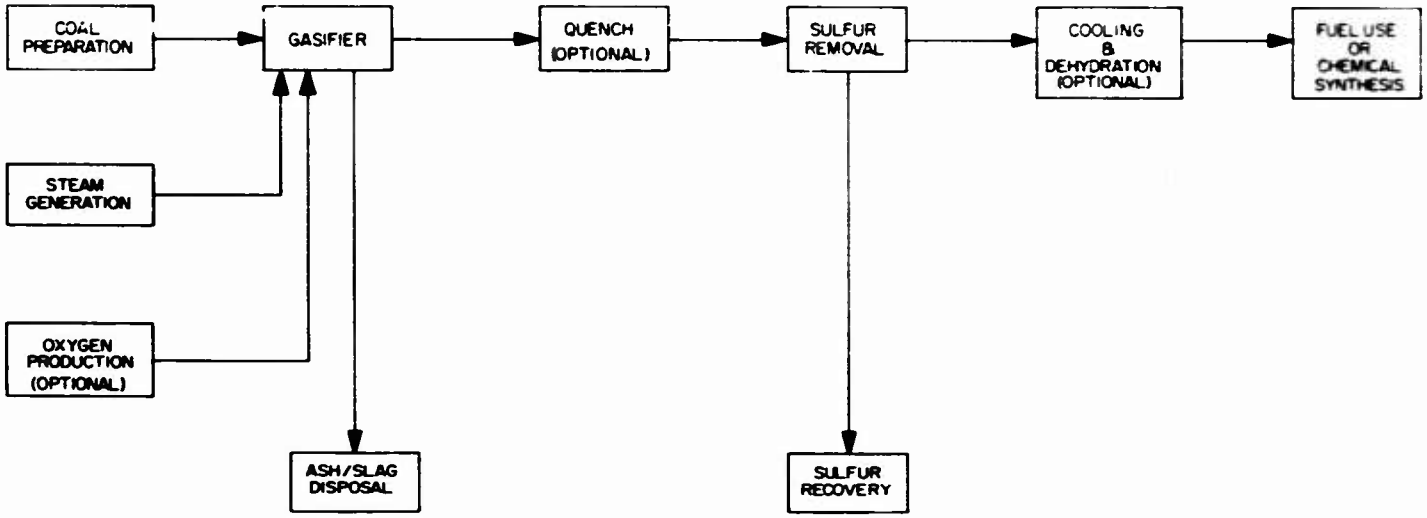

Figure A1. Basic Features of Low-Btu Gasification Processes

Production of high-Btu gas from coal involves all of the operations needed for low-Btu gas production with the addition of several more steps. The final substitute natural gas is composed principally of methane and can be introduced into existing pipeline systems in place of natural gas. Existing equipment can be operated on substitute natural gas without modifications.

As with low-Btu gas, production of high-Btu gas is accomplished by reacting coal with steam and oxygen, removing particulates and condensibles when necessary, and removing sulfur compounds. In addition to these operations, it is also necessary to remove carbon dioxide, to adjust the hydrogen to carbon monoxide ratio to three to one, and finally to convert the hydrogen and carbon monoxide to methane. Figure A2 is a general schematic for high-Btu gasification.

In producing high-Btu gas, it is desirable to maximize the formation of methane in the gasifier. Coincident with this, the level of CO_2 should be as low as possible, while still yielding sufficient heat (from combustion of part of the coal) to carry out the gasification reactions. Most processes use oxygen as the oxidizer. This eliminates dilution of the gas with nitrogen, which precludes obtaining a heating value of 950 Btu/SCF. Two developmental processes (the CO_2 Acceptor and HYGAS) use air instead of oxygen to carry out the combustion portion of the reaction in a reactor that is separated from the gasifier and which obtains heat transfer indirectly.

High-Btu gasification requires more process steps than low-Btu gasification, although some are identical. The steps involved are:

- Coal Preparation: crushing and/or grinding, drying, and size classification.
- Gasification: reaction of the coal carbon with steam and oxygen to form H_2, CO, CO_2, and CH_4.
- Particulate Removal: most developmental systems utilize high temperature removal of entrained solids.

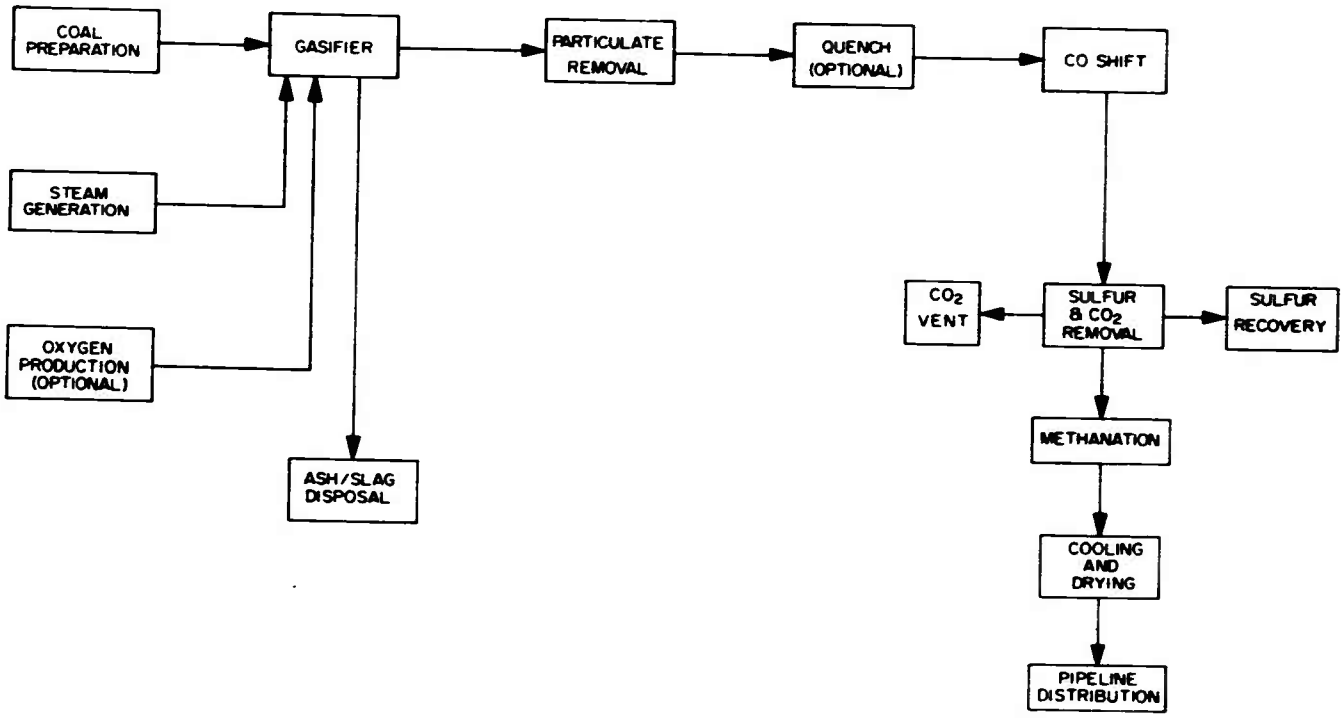

Figure A2. Basic Features of High-Btu Gasification Processes

- Quench: quenching of the gas is not usually necessary in high-Btu processes but steam may be added at this step.

- CO-shift: catalytic adjustment of the H_2:CO ratio to 3:1 by the reaction.

$$H_2O + CO \longrightarrow CO_2 + H_2$$

- Sulfur and CO_2 Removal: stripping of CO_2, H_2S, and other sulfur compounds from the gas.

- Methanation: catalytic formation of methane from H_2 and CO by the reaction.

$$3H_2 + CO \longrightarrow CH_4 + H_2O$$

- Cooling and Drying: removal of water formed during methanation to meet pipeline specifications and cooling to pipeline conditions.

Supporting services and utilities are also necessary. Steam generation, oxygen production, cooling water supplies, water and wastewater treatment, solid waste disposal, and sulfur recovery are such services. High-Btu gasification processes in general require moderate to high quantities of process water. Because much of the water is used to generate high pressure superheated steam, water treatment facilities somewhat more extensive than those used for low-Btu gas are needed.

For high-Btu gasification the most promising commercially available process is based on Lurgi technology. The most advanced developmental processes are CO_2 Acceptor, Synthane, and HYGAS. CO_2 Acceptor has been successfully piloted using lignite, HYGAS has been tested on several coals, and the Synthane pilot plant is operational. Appendix D presents descriptions of these and other high-Btu processes.

Coal Liquefaction. The objective of converting coal to liquid fuels is three-fold: production of non-polluting utility fuels, production of synthetic crude for refining to distillate fuels, and/or production of petrochemical feed-stocks. Major efforts in the United States currently are directed toward developing processes for the production of utility fuels. The two routes applied for developing these processes are: (1) pyrolysis and hydrocarbonization, and (2) catalytic and non-catalytic hydrogenation. Using these technologies, the weight ratio of hydrogen to carbon in coal is increased from 1:(12-18) to 1:(5-10) in the liquid fuels. Table A 3 lists seven developing processes of major importance.

TABLE A3. Coal Liquefaction Processes

Processes	Developer	Comments
Pyrolysis		
COED	FMC Corp.	Multistage pyrolysis in fluidized-bed reactors. Heat transfer by countercurrent flow of coal and gases produced from char.
COALCON	Union Carbide Corp.	Hydrocarbonization process. Heat transfer by circulating hot coal-ash agglomerates.
Catalytic Hydrogenation		
Consol Synthetic Fuel (CSF)	Consolidation Coal Co.	Dissolution of coal with hydrogen-donor solvent followed by extraction in a stirred vessel and catalytic hydrogenation of low ash coal extract
H-Coal	Hydrocarbon Research, Inc.	Slurry preparation with coal derived oil followed by hydrogenation in an ebullating-bed reactor.
Synthoil	Pittsburgh Energy Research Center, ERDA	Slurry of coal prepared with coal derived oil. Catalytic hydrogenation in a fixed-bed reactor.
Noncatalytic Hydrogenation		
Solvent Refined Coal (SRC)	The Pittsburgh and Midway Coal Mining Co.	Slurry preparation with coal derived solvent followed by dissolution and hydrogenation with H_2.
Exxon Donor Solvent	Exxon Research and Engineering Co.	Hydrogenation with hydrogen-donor solvent which is prepared on a fixed-bed catalytic reactor.

N.B. Fischer-Tropsch Synthesis (catalytic conversion of $CO+H_2$) is also a process used for liquefaction of coal. It is the only commercial process available in the world. It has not been used in the U.S. This process requires, as a first step, that the coal be gasified.

Pyrolysis and Hydrocarbonization. Pyrolysis of coal involves heating the coal in the absence of direct hydrogen contact to about 800°F and higher to drive off the volatile materials and naturally occurring oils. Partial combustion of a portion of the coal is usually the source of heat in pyrolysis processes. By-products obtained are gases (with a higher H/C ratio than the feed coal) and char, both of which are recovered for further use in the process. The oil is hydrotreated to remove sulfur, nitrogen, and oxygen, and to produce a higher-quality product. Hydrogen, for hydrotreating, is obtained by reacting the by-product char with steam and oxygen. The quantity of liquid product depends on the coal rank, the mechanisms of heating, and the operating pressure and temperature. At lower temperatures more char and smaller amounts of gases and liquids are obtained. At higher temperatures the liquid decomposes to gaseous products. The liquid yield can be increased by minimizing the exposure time to elevated temperatures. At increasing pressures less liquid product is obtained with higher quantities of char and gas resulting. At pressures above 25 atmospheres, product distribution no longer is changed by pressure.

Hydrocarbonization differs from pyrolysis by using high-temperature hydrogen-rich gas for devolatilization. In addition to the effect of heat, in the presence of hydrogen at high temperatures, coal components are hydrogenated. A greater proportion of more hydrogenated hydrocarbons is produced than by pyrolysis. Hydrogen is prepared by reaction of the char with oxygen and steam. Generally the pyrolysis and hydrocarbonization processes are similar except for the product yield. Pyrolysis products usually require further hydrogenation, while products from hydrocarbonization may not. A schematic flow diagram for typical pyrolysis of coal is shown in Figure A3.

The main process sequence consists of eight operations. These are:

- Coal Preparation: crushing, grinding, and drying.
- Pyrolysis: devolatilization using hot flue gas or gases generated <u>in-situ</u> by the reaction of steam and air or oxygen with coal.
- Quench: cooling to condense liquid hydrocarbons.

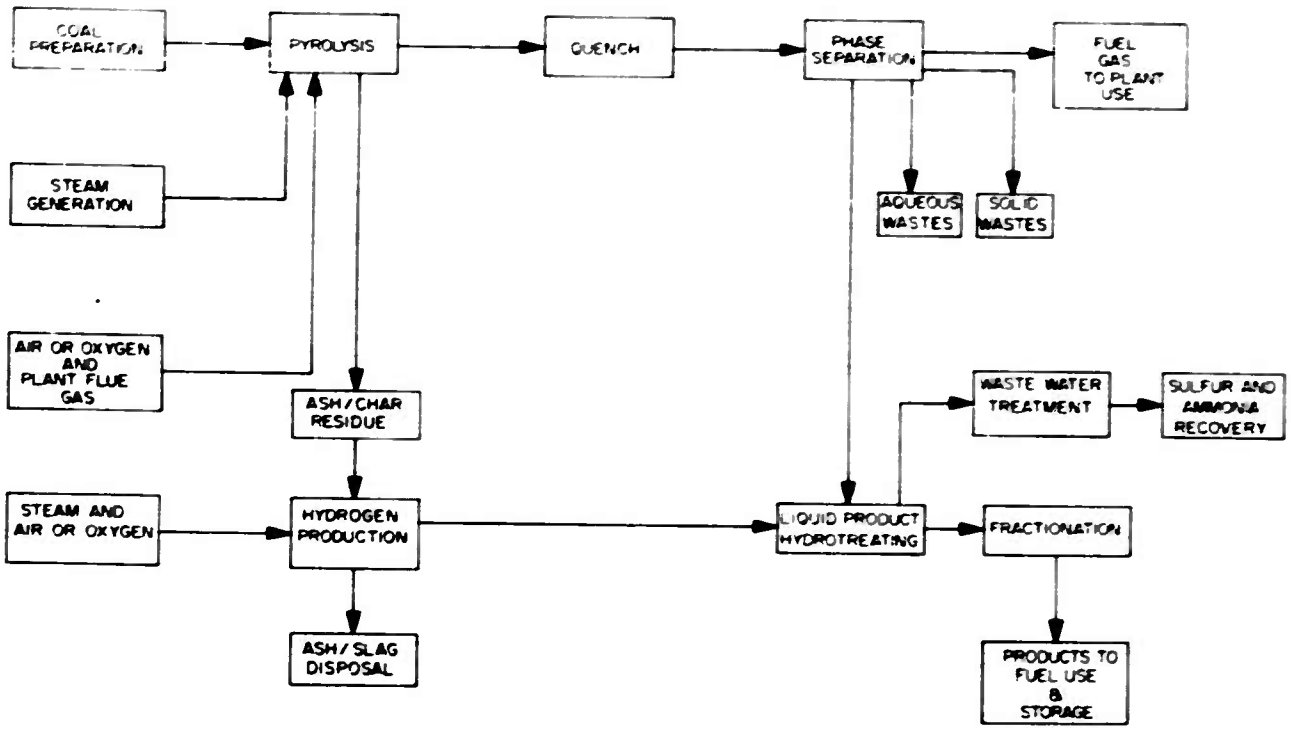

Figure A3. Basic Features of Pyrolysis Processes

- Phase Separation: separation of crude oil from gases, water, and solids.

- Hydrogen Production: generation of hydrogen from char, steam, and air or oxygen.

- Liquid Product Hydrotreating: Hydrogenation of the crude to upgrade the hydrocarbon content and to remove sulfur, nitrogen, and oxygen.

- Fractionation: distillation into product and by-product fractions.

- Product and By-Product Storage and Use: utilization of the main fuel product and disposition of by-products.

Electrical power, steam, air or oxygen, water and cooling water are required as utilities. Supporting operations include wastewater and solid waste disposal and by-product recovery.

Hydrocarbonization processes differ from the flow sheet shown for pyrolysis by introducing part of the hydrogen into the pyrolysis reactor in place of steam, oxygen, or air. In addition, less hydrogen is needed for hydrotreating because the crude product is more highly hydrogenated. Aside from these differences, the operations in the two technologies are quite similar.

At this time the two processes based on pyrolysis and hydrocarbonization of maximum importance are COED and Coalcon, respectively. The COED pilot program has been completed and the pilot plant has been dismantled. During 1973 a Navy destroyer was successfully operated for a short (several hours) run on fuel produced from COED crude. There are no current plans for implementation of COED technology, but future development may make the process economically competitive. A demonstration plant for the Coalcon process was planned for New Athens, Illinois. This project is jointly funded by ERDA, industry, and the State of Illinois. Coalcon is a hydrocarbonization process based on existing technology and equipment. While the major product is liquid fuel, gas and fuel-grade char also will be procuced. Due to excessive cost increases Coalcon probably will be terminated by the end of 1977.

Process descriptions of the pyrolysis and hydrocarbonization technologies are included in Appendix E.

Catalytic and Non-Catalytic Hydrogenation. In contrast to pyrolysis and hydrocarbonization, hydrogenation of coal involves heating coal at elevated pressure and temperature with direct hydrogen contact. The properties of the liquids obtained depend upon the amount of hydrogen added. Liquids of lower boiling range are obtained when larger quantities of hydrogen are reacted. Catalytic and non-catalytic hydrogenation result in different end products, the former producing more liquid than the latter. If the hydrogen is reduced, a solid product (at ambient conditions) may be formed. Larger quantities of hydrogen yield a liquid product at ambient conditions.

Hydrogenation of coal is carried out in a coal-oil slurry phase. Coal is ground to the required size, dried, and mixed with an aromatic solvent, usually produced in the process itself. The coal slurry is heated to 675°F to 850°F and hydrogenated in a reactor at pressures of 200 to 4500 psig. At higher temperatures thermal cracking exceeds hydrogen transfer and results in coke formation and gas production. Catalytic hydrogenation allows higher temperatures, up to 950°F, without coke formation. The conventional catalysts used are cobalt and ammonium molybdate, nickel chloride, ferrous chloride, and similar materials.

Catalytic and non-catalytic hydrogenation processes basically use the same processing operations. Generally, differences are in conditions at which coal is liquefied. A generalized block flow sheet for typical hydrogenation process is shown in Figure A4. The main process stream includes operations as follows:

- Coal Preparation: crushing and drying.
- Slurrying and Preheating: mixing coal with recycled solvent, introducing hydrogen to the mix, and bringing the slurry to the necessary temperature and pressure.
- Liquefaction: either catalytic or non-catalytic reaction of hydrogen with coal components to produce liquid hydrocarbons.
- Phase Separation: removal of undissolved coal and mineral matter, and separation of liquid and vapor fractions:

- Hydrogen Production: preparation of hydrogen for process use from undissolved carbon residue.

- Hydrotreating: further hydrogenation for non-catalytic processes to remove sulfur, nitrogen, and oxygen, and to upgrade the crude fuel.

- Fractionation: separation of the fuel components, recycle solvent, and by-products.

Utilties (steam, air, cooling, water, electrical power) are required as well as wastewater treatment, solid waste disposal, and by-product storage and disposal.

Solvent refined coal is the most advanced liquefaction process. Two pilot plants are in operation. One, a 6 TPD plant, is located at Wilsonville, Alabama and the other, having a 50 TPD capacity, is at Fort Lewis, Washington. H-Coal and the Donor Solvent Process are second in importance with pilot operations planned or beginning. Appendix F presents descriptions of hydrogenation processes for liquefaction of coal.

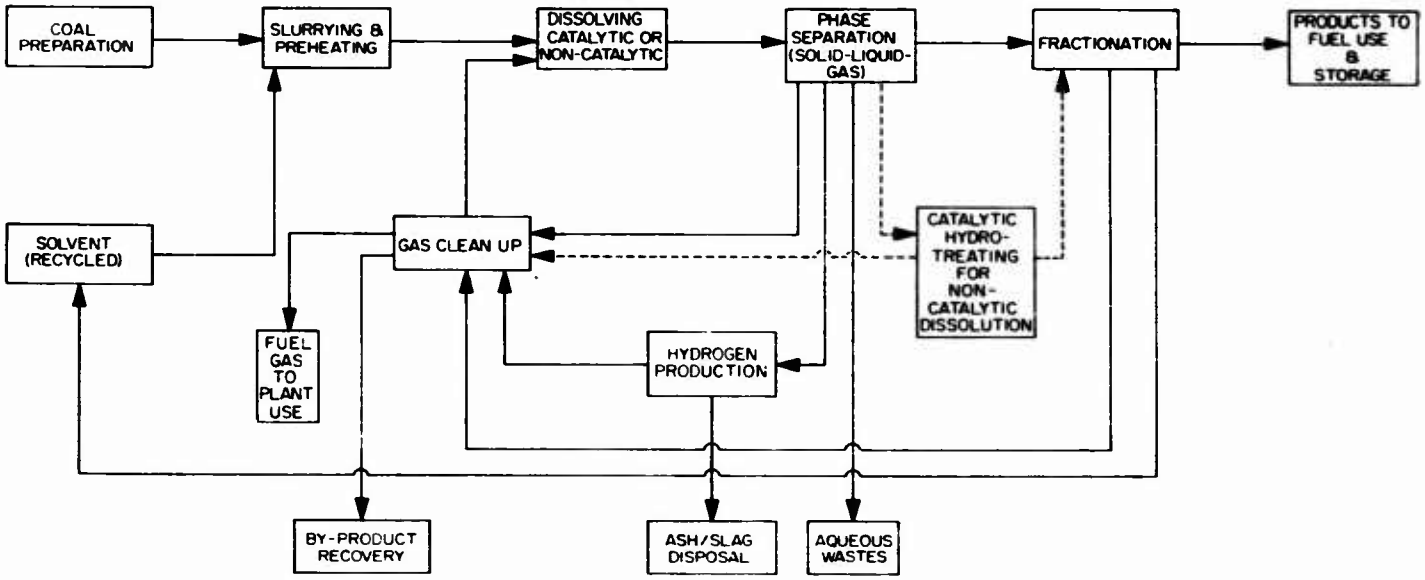

Streams denoted by dashed lines

(----) Maybe necessary with non-catalytic processes.

Figure A4. Basic Features of Hydrogenation Processes

APPENDIX B

SELECTION OF COAL TECHNOLOGIES

Rationale and Criteria for Selection of Technologies For Further Consideration. Obviously all of the technologies described in this report are not practical and applicable to Army bases. A limited number of suitable processes must be selected from those described. This selection should not be optimized to obtain a single process or even one process from each technology, but rather to identify within the technologies processes which appear applicable and to eliminate unqualified technologies or processes.

Direct combustion of coal, conversion of coal to gas, and conversion of coal to liquids must be considered individually with respect to the capability to fulfill specific requirements. Similarly, commercially available and developmental processes within each technology must be considered separately. The approach taken has been to evaluate first the technical factors relevant to implementing a given process. After one or more processes have been identified as technically acceptable, economic factors then have been used to identify and eliminate economically impractical processes.

Specific technical criteria considered in the selection include process design factors, operability, capacity, natural resource requirements, and environmental factors. Economic considerations included manpower, retrofitting, transportation, and by-product recovery costs. Table B1 identifies these criteria.

Direct Combustion Technologies. Every direct combustion coal technology previously discussed conceivably could be applied at Army bases. Advantages and disadvantages of each system are shown in Table B2. The only advanced developmental technology for direct combustion is the fluidized-bed system.

After evaluation of the different stoker technologies, all stoker systems could be applied to Army facilities. Each system is efficient and reliable, adaptable to burning most types of coals, and compatible with required load demands and variations. Environmental problems, stack gas emissions, or ash disposal are manageable.

TABLE B1. Factors Influencing Applicability of Technologies to Army Use

I. Technical Criteria

A. Process Factors

Product/Use Compatibility	Ability to utilize the product fuel for the end use application
Product Storage/Delivery	Need for product fuel storage and/or delivery system
Process Complexity	Compatibility of the level of technology sophistication with use for military bases
Process Reliability	Ability of process equipment to perform continously and on demand
Feed Stock Flexibility	Capability of equipment to function effectively using different coals
Conversion Efficiency	Amount of input energy recovered as useful heat
Process and Cooling Water Requirements	Water quantity and quality
Ability to Convert Waste Products	Compatibility of utilizing other fuel and later converting to coal

TABLE B1. Factors Influencing Applicability of Technologies To Army Use (Continued)

B. Capacity Factors	
Base Load	Comparison of process base load capacity with military post consumption
Peak Load	Ability of one or more producing units to meet peak requirements
Turndown Flexibility	Range of outputs over which a single process unit can efficiently and reliably operate and the ability to selectively operate multiple units.
Size Compatibility with Demand	Ability of process units to be scaled up or down to match production to consumption.
C. Coal Supply Factors	
Geography/Location	Regional availability of coal suitable for use
Coal Rank and Properties	Effect of coal rank and properties on equipment performance and compatibility with the process requirements
Process Requirements	Flexibility of process to operate on range of coals
Long Term Availability	Ability of supplier(s) to provide coal of required properties for the projected life of the equipment.
Ash and Sulfur Content	Availability of methods to handle ash and sulfur compounds produced from coal

TABLE B1. Factors Influencing Applicability of Technologies To Army Use (Continued)

D. Environmental Factors	
Ash Disposal	Facilities required for ash handling.
Other Solid Waste	Amount and type of solid wastes presenting disposal problems
Air Pollution	Necessary control system to prevent particulate, emissions to atmosphere
Wastewater	Compatibility of wastewaters generated with existing treatment system and need for industrial wastewater treatment
Local Environmental Regulations	Compatibility of process to efficiently perform in compliance with environmental laws, both local and federal
II. ECONOMIC FACTORS	
Capital Costs	Cost of new equipment or modifications to existing systems, installation, engineering, and ancillary equipment
Operating Costs	Maintenance, salaries, utilities and services, raw materials, replacement
Manpower	Need for highly trained or unskilled labor to operate the system ability to automate equipment.
By-Product Values	Need to dispose of or ability to profitability market by-products
Transportation	Existing nearby transportation facilities

TABLE B2. Summary of Factors in Direct Combustion Application

TECHNOLOGY	STATUS	CAPACITY	ECONOMICS	AIR POLLUTION	FUEL
Spreader Stoker	Highly reliable Requires minimal space, Efficient	Boiler Capacity: 75,000-400,000 lbs of steam per hour, Reponsive to variations in load demands		Dust collectors, SO_2 Control, and Ash Disposal Necessary	Can burn broad range of fuels including caking coals - no anthracite, Coal size segregation important
Underfeed Stoker	Efficient	Output: up to 500,000 Btu/sq ft hr, One can be designed to handle variations in load		Particulate, SO_2, and ash disposal necessary	Coal size affects capacity and efficiency, Can burn caking coals as well as others, Coal size segregation important
Water-Cooled Vibrating Grate Stoker	Become increasingly popular. Efficient	Output - up to 400,000 Btu/sq ft - hr		Especially adaptable to multiple fuel firing, Particulate and SO_2 removal equipment required, Ash disposal necessary	Low and high rank coals can both be burned, Can burn coals with high free swelling index
Chain Grate and Traveling Grate Stokers	Relatively high maintenance, Efficient	Output 350,000-500,000 Btu/sq ft hr		Minimum of fly ash carry-over, SO_2 and particulate control equipment necessary	Can burn nearly any solid fuel, Coal size segregation important
Pulverized Coal: Bin System	Pulverizer system required, More efficient than stokers, 400,000 lb/steam hr output, Requires more space than direct firing		No longer competitive with direct-firing	Danger of explosion during storage and pulverized coal, Requires SO_2 and particulate control equipment	Can burn all ranks of bituminous - anthracite with special preparation
Pulverized Coal Direct Firing System	Pulverizer system required, Must be operated continously, More efficient than stokers above 400,000 lb steamhr, Greater simplicity than bin system	Multiple pulverizers and burners permit adjustment to demand	Lower initial cost than bin system	Requires SO_2 and particulate control equipment	
Multi-cell Fluidized Bed	Most efficient method of direct combustion technology under developmental stage	Multiple modules permit adjustment to demand	Inexpensive due to fabrication potential	Reduced sulfur dioxide (up to 90%) and nitrogen oxide emissions, Ash is sintered and can be used as an aggregate	Can burn any coal and other solid fuels, No danger of slagging, Can burn high ash coals
Coal/Oil Slurry	Technology under development stage	Won't significantly affect Btu output when oil fired unit is converted	Increase in capital cost and operating costs	No significant affect on emissions	

Pulverized coal combustion could also be effective at military installations. Despite the fact that coal pulverization equipment is necessary, energy efficiency, size compatibility, and turndown capability through use of multiple units make pulverized-coal-burning attractive. As with stokers, through proper preparation and control, environmental impact should be minimal.

Fluidized-bed combustion (FBC) demonstration plants currently are being funded by ERDA. This technology promises to be an effective, efficient, economical, and environmentally sound method of burning coal. Variations in load demand and sizing also are easily met. A significant additional advantage of FBC is the elimination of the necessity for coal desulfurization and/or sulfur dioxide stack gas cleaning.

Coal Gasification Technologies

Commercial Processes. All commercially available gasification processes yield low- and medium-Btu gas. There are no proven commercial high-Btu systems in operation, although high-Btu gas has been produced experimentally during tests at Westfield, Scotland. Plans to use the oxygen-fired Lurgi system for producing substitute natural gas are being implemented but no plants have yet been constructed. Any immediate effort to convert coal to gas will of necessity be based on one or more of the low-Btu processes.

Tables B3, B4, and B5 summarize the characteristics which will have greatest influence on military applications of the four most advanced commercial low-Btu processes. On the basis of these summary tables the two most promising processes for near-term Army use are Lurgi and Koppers-Totzek.

For low-Btu production, Koppers-Totzek based systems have the advantages of accepting any type of coal, operating at sufficiently high temperatures to minimize formation of oils and tar, and not requiring high-pressure operation. The need for an oxygen plant to supply the gasifier with oxygen is a disadvantage. Lurgi has the advantages of being able to produce low-Btu gas using either air or oxygen as the oxidizing medium and of having a high thermal efficiency. Its prime disadvantage is the lower temperature operations leading to formation of oils, tars, and phenols which must be separated from the raw gas and then disposed of. (Lurgi gasification appears to have lower capital costs than Koppers-Totzek.)

TABLE B3. Product Factors Affecting the Low-Btu Gas Applicability to Army Bases

Gasifier	Oxidizer (1)	Typical Gas Compositions, Mole Percent (2) CO	CH_4	H_2	H_2/CO	Suitability for Upgrading to High-Btu Gas	Need For Pressurization Before Distribution	Volume Ratio of Gas Relative to Natural Gas (3)
Lurgi	A	9.2	4.7	20.1	2.2	No	No	5.6
	O	13.3	5.5	19.6	1.5	Yes	No	3.1
Koppers-Totzek	O	50.4	0.0	33.3	0.7	No	Yes	3.3
Winkler	A	25.7	0.7	30.3	1.1	No	Yes	8.3
	O	19.0	2.5	13.9	0.7	No	Yes	3.3
Wellman-Galusha	A	29.6	2.4	32.3	1.1	No	Yes	5.9
	O	26.0	0.5	11.7	0.6	No	Yes	3.6

(1) A: Air, O: Oxygen
(2) CO_2, N_2, H_2O and other constituents are not listed.
(3) Natural Gas, 1000 Btu/scf.

TABLE B4. Equipment Factors Affecting Applicability of Low-Btu Gas to Army Use

Gasifier	Gasifier Description			Gasifier Performance								
	Type	Coal Feed Capabilities	Gasifying Medium	Operating Pressure atm.	Gasifier Diameter ft.	Unit Capacity Billion Btu/Day	Heating Value Btu/scf	Turn-down	Overall Efficiency, Percent Hot[2]	Overall Efficiency, Percent Cold[3]	Steam Requirement lb/MM Btu	Units Required for Army Scale Use
Lurgi	Fixed/ agitator	Needs sized low caking and non-caking coals	A) Steam-air and B) Steam-oxygen	20	12 16 (planned)	7 to 9 12 to 16	180 (air) 320 (oxygen)	50	91	82	150 to 180	2 to 10
Koppers-Totzek	Entrained slagging	Needs pulverized coals Can accept all types	A) Steam-oxygen B) Air cannot be used	1	2 burners[1] 4 burners	7 to 9 14 to 18	300	35 65	86	67	40 to 65	1 to 3
Winkler	Fluidized	Needs crushed low caking and non-caking coals	A) Steam-air B) Steam-oxygen	1	18	8 to 10	120 (air) 300 (oxygen)	53	75	65	20 to 30	2 to 3
Wellman-	Fixed/ agitator	Needs sized low caking and non-caking coals	A) Steam-air B) Steam-oxygen	1	10	15 to 20	170 (air) 280 (oxygen)	90	95	82	60 to 75	10 to 15

(1) Not cylindrical, 25 ft Ellipsoid

(2) Overall thermal efficiency with fuel gas at discharge temperature.

(3) Overall thermal efficiency with fuel gas at ambient temperature (70°F) and no sensible heat recovery.

TABLE B5. Product, By-Product, and Waste Factors

Process	By-products	Environmental Considerations	Remarks
Lurgi	Tar, oil, phenols, ammonia, steam	The facility will require a gas cleanup and wastewater treatment facility	Suitable for industrial heating Combined-cycle operation is not simple Instrument control simple
Koppers-Totzek	Steam	Purification system is less complicated since only trace amounts of tar, oil, and phenols are present in the gas	Suitable for combined-cycle operation Instrument control sophisticated
Winkler	Steam	Purification system is less complicated since only trace amounts of tar, oil and phenols are present in the gas.	Suitable for industrial heating and combined-cycle operation Instrument control sophisticated
Wellman-Galusha	Tar, oil, phenols ammonia, steam	The facility will require a gas cleanup and wastewater treatment facility.	Suitable for industrial heating Combined-cycle operation simple Instrument control simple

Developing Processes. While there are several low-Btu and medium-Btu processes under development, the objectives of this technology are combined high-temperature gas and steam turbine electric power generation. The scale of these units is not compatible with Army needs. Developmental low- and medium-Btu processes are not considered to be of interest for military applications.

All high-Btu processes must be considered developmental. Tables B6, B7, and B8 summarize the relevant characteristics of the most promising and most advanced of these. Oxygen-fired Lurgi is the only fixed-bed system, and HYGAS and CO_2 Acceptor are processes not requiring oxygen.

The latter two processes suffer the disadvantage of extremely complex solids transfer in a high-temperature environment. High concentrations of methane are produced in the gasifier. Problems of scaledown to requisite size from commercial scale are probable. Pilot plant sizes, however, could conceivably be scaled up, or pilot-sized units replicated, to produce gas in quantities required by Army facilities, although costs may be prohibitive.

All high-Btu processes require steam (the source of hydrogen), carbon dioxide and hydrogen sulfide removal, and methanation. For military uses, production of high-Btu gas may require excessive sophistication when compared to other available options.

Among the processes shown in Tables B6, B7, and B8, Lurgi is closest to commercialization for production of high-Btu gas. It is also the least "high technology" system, but requires (as does the low-Btu version) fairly extensive waste control. Shift, gas cleanup, and methanation all are necessary processing steps to upgrade the raw gas to a high-Btu product.

Synthane, BIGAS, HYGAS, and CO_2 Acceptor are considered second-generation technologies. Oxygen is required by Synthane and BIGAS and hydrogen is obtained from steam by the CO shift reaction. Hydrogen must be supplied separately to HYGAS, while sufficient hydrogen can be generated in the CO_2 Acceptor reactor to avoid this. All four require methanation but the highest concentration of methane, and therefore the least additional methanation reaction, is obtained with HYGAS. BIGAS and CO_2 Acceptor are the "cleanest" of the processes.

TABLE B6. Product and Process Factors Affecting Applicability of High-Btu Gas to Army Use

	Typical Raw Gas Compositions, Mole Percent						
	CH_4	CO	H_2	Ratio of H_2/CO	Quench and Heat Recovery	Gas Cleanup System	Shift Reaction
Lurgi	4.7	9.2	20.1	2.2	Gas washed with gas liquor	Not required prior to shift reaction but required prior to methanation step	About 50% of the gas bypasses shift reaction
Synthane	15.4	10.5	17.5	1.7	Gas washed with water	Not required prior to shift reaction but required prior to methanation step	Part of the gas bypasses shift reaction
BIGAS	8.1	22.9	12.7	0.6	Gas washed with hot condensate	Not required prior to shift reaction but required prior to methanation step	All the crude gas goes to shift reaction
HYGAS	32.8	11.6	37.6	3.1	Gas washed with water or oil	Required prior to methanation step	Not required as H_2/CO ratio after gas cleanup is 3.1 Ratio adjusted by hydrogen addition if required
CO_2 Acceptor	17.3	14.1	44.6	3.2	Gas washed with water	Smaller system required due to H_2S and CO_2 react with the acceptor	Not required as raw gas contains enough hydrogen

TABLE B7. Equipment Factors Affecting Applicability of High-Btu Gas To Army Use (continued)

Process	Bed Type	Coal Feed Capabilities and Pretreatment	Feed System	Pressure atm	Exit Gas Temperature °F
Lurgi	Fixed/Agitator	Limited to non-caking or low caking coals. Fine coal sizes must be briquitted for use.	Pressurized lock-hopper system	20 to 30	700-1100
Synthane	Two stage fluid bed	Caking coal pretreated in a separate high pressure fluidized bed. Wide range of coal including lignite can be used.	Pressurized lock-hopper system	70	1400
BIGAS	Entrained/ Slagging	All types of coals can be used without prior treatment.	Coal water slurry	100	1700
HYGAS	Three stage fluid bed	Caking coal pretreated in a separate atmosphere fluidized bed.	Coal oil slurry	70	1200
CO_2 Acceptor	Single stage fluid bed	Caking coal pretreated in a separate fluidized bed. Limited to more reactive lignite and subbituminous coals.	Lock-hopper system	10-20	1500

TABLE B7. (continued) Equipment Factors Affecting Applicability of High-Btu Gas to Army Use

Process	Methanation and Dehydration	Oxygen Plant	Process Water Requirements Gal/Million Btu	Thermal Efficiency Percent	Heating Value Btu/SCF
Lurgi	Methanation larger than HYGAS process	Required	3.4	67	980
Synthane	Methanation smaller due to high percent of methane produced on the gasifier	Required Oxygen requirements due to high CO_2 production in the gasifier	4.3	65	927
BIGAS	Methanator of large size will be required due to small H_2/CO ratio	A large oxygen plant is required	6.4	69	943
HYGAS	Methanator smaller due to high percent of methane produced in hydrogasifier	Not required	7.6 (Steam-oxygen)	57 (Steam-Iron) 71 (Steam-Oxygen)	941 (Steam-Iron) 947 (Steam-Oxygen)
CO_2 Acceptor	Large size methanator required as amount of methane produced directly is low	Not required	6.3	62.5	953

The process most likely to be compatible to Army utilization for the near (but not immediate) future, is Lurgi. For consideration at a later time, CO_2 Acceptor and HYGAS, the two most advanced second-generation processes, may be considered but with reservations due to equipment complexity.

Coal Liquefaction Technologies. There are at present no commercial coal liquefaction processes in the United States. All processes in this technology are under development and will not become commercial in the near future.

These developing liquefaction processes are characterized by complex unit operations and unit processes. New technology is required in the initial breakdown of coal into liquid components. Subsequent processing steps resemble oil refining operations and the nature of the processing equipment and the technology dictates that large-scale facilities will be necessary to economically produce liquid fuels from coal. In general, a minimum economic capacity is nominally 50,000 barrels per day of product produced from 18,000 to 25,000 TPD of coal. This is far in excess of the consumption of any individual Army facility. Even the major energy-consuming bases use only one-twentieth to one fortieth the Btu equivalent of this amount of oil.

On the basis of size, none of the coal liquefaction technologies under development can be selected for further study due to the large capacities required for economic operation. Additional factors in eliminating these processes are the production and disposal of multiple by-products and the complexity of the technology. For practical purposes, a small petrochemicals plant would be operated if the processes were to be scaled down to requisite size. Except for the capacity restriction, Solvent Refined Coal (SRC), H-coal, and Coalcon processes would be the most promising liquefaction processes. It is possible that future developments may result in liquefaction processes compatible with Army facilities' fuel needs in terms of capacity. At this time, however, no such processes have been identified.

One alternative to on-site production of liquid fuel from coal is the operation of a regional facility. A full-scale plant could be located to serve a number of military facilities. The plant location could be chosen to minimize transport of coal and product. Product fuel would be delivered to the facilities served by the plant in tank trucks or by rail. Regional facilities, however, are not within the scope of this effort.

APPENDIX C

LOW- AND MEDIUM-BTU GASIFICATION PROCESSES

Descriptions of the major low-Btu gasification processes follow.

COAL GASIFICATION

LURGI PROCESS

Low-Btu Gas

BACKGROUND

Sponsor:	Proposed Demonstration Plant sponsored by ERDA
Developer:	Lurgi Mineraloltechnik g.m.b.h.
Contractor:	Commonwealth Edison Co./ Electric Power Research Institute (EPRI)
Contract Value:	ERDA - $62.2 million Others - $42.7 million
Status:	600 tons/day demonstration plant scheduled for operation in June 1978. Plant design and construction will be done by Fluor Engineers. American Lurgi will furnish the gasifier. Plant site Located at Pekin, Illinois.
Compatible Coal Type:	Non-caking coals.

CONCEPTUAL DESIGN	Plant producing 307 MSCFD low-Btu gas.

Coal Preparation

Coal Type: Navajo Subbituminous

Coal Analyses:

Proximate, wt%		Ultimate (MAF), wt%	
Fixed Carbon	35.0	Carbon	76.72
Volatile Matter	31.2	Hydrogen	5.71
Ash	17.3	Nitrogen	1.37
Moisture	16.5	Sulfur	0.95
		Oxygen	15.21

Heating Value, Btu/lb: 8872 (MAF)
7340 (As Received)

Preparation: Coal is dried and ground to 1-3/4" x 3/16"
Caking coals are to be pretreated.

Feed System: Lock hopper

Gasification Reactor Description and Operating Conditions

Type: Counter-current moving bed

Temperature: Top: 1100-1400°F
Bottom: 1700°F

Pressure: 285 psig

Input to Gasifier Reactor:

Coal	440,000 lb/hr
Steam	258,060 lb/hr
Air	184 MSCFD (dry)
(including water)	3,679 lb/hr

Output from Gasifier Reactor:

Product gas	307.2 MSCFD
Heating value	230 Btu/SCF
Acid gas	40.3 MSCFD
By-product	**lb/hr**
Ash	80,224
Tar	21,846
Gas liquor	231,165

Analysis of Char, wt% Dry

Not specified

Heating value: Not specified

Other Information

Type of acid gas removal: Hot carbonate (Benfield)

Type of sulfur recovery: Stretford

Thermal efficiency: 80 to 85% (gasifier only)

Process Description

Coal can be converted to a low-Btu gaseous product in the Lurgi gasifier (see Figures C1 and C2) by reaction with steam and air at about 250-300 psi. The gasifier is a moving-bed-type reactor with sized coal entering the top through a distributor and a mixture of steam and air entering the bottom through a rotary-grate. The coal is fed through a lock hopper system. The gasifier consists of a double-walled pressure vessel; the double wall forms a water jacket which protects the outer pressure wall from high-reaction temperatures. As the coal charge travels downward, the coal is dried, devolatized and gasified. Resulting ash is removed by the rotating grate through a lock hopper system. The maximum temperature is reached in the combustion or oxidation zone, where the highly exothermic oxidation reactions provide the necessary heat and temperature for the endothermic reactions and vaporizations which occur in the upper portions of the reactor. Ash leaving the combustion zone is cooled by incoming steam and air before being discharged. The crude gas is washed and cooled by generating low-pressure steam followed by air and water quench cooling. The gas is then purified by passing it through the hot carbonate acid gas-removal unit. The Stretford unit is used for sulfur recovery.

Although this proven process has been used commercially since 1936, it does have certain operating limitations. It is restricted to noncaking coals; hence only lignite, subbituminous coals, and noncaking and weakly caking bituminous coals can be used directly. Pretreatment is necessary for caking coals. The size of coal fed must be closely regulated, with all fines eliminated. Several gasifier units must be operated in parallel for commercial production, due to size limitations. The maximum size of the Lurgi is about 12 feet in diameter. Operational problems are mechanical wear of moving parts.

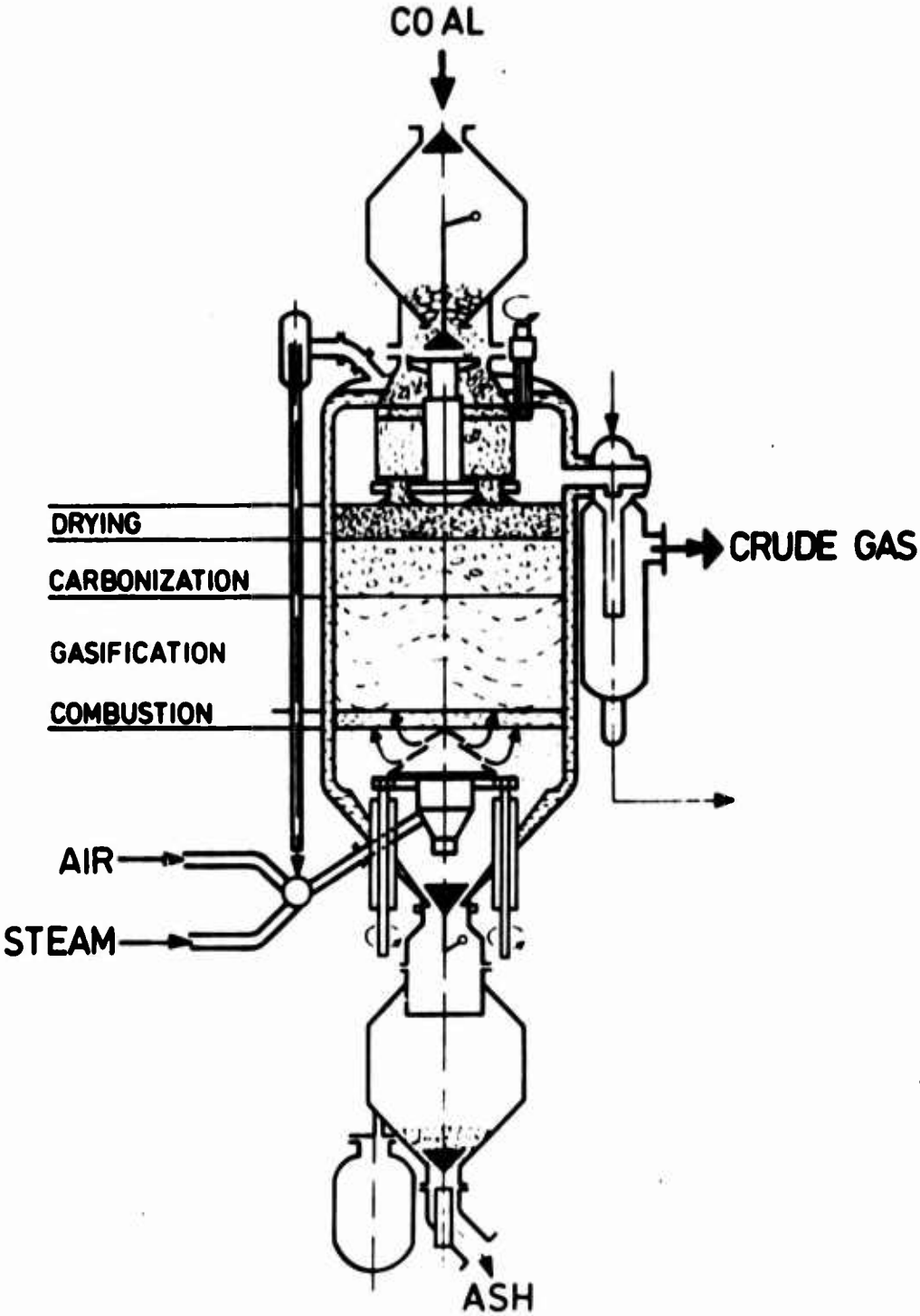

Figure C1. Lurgi Low-Btu Gasifier

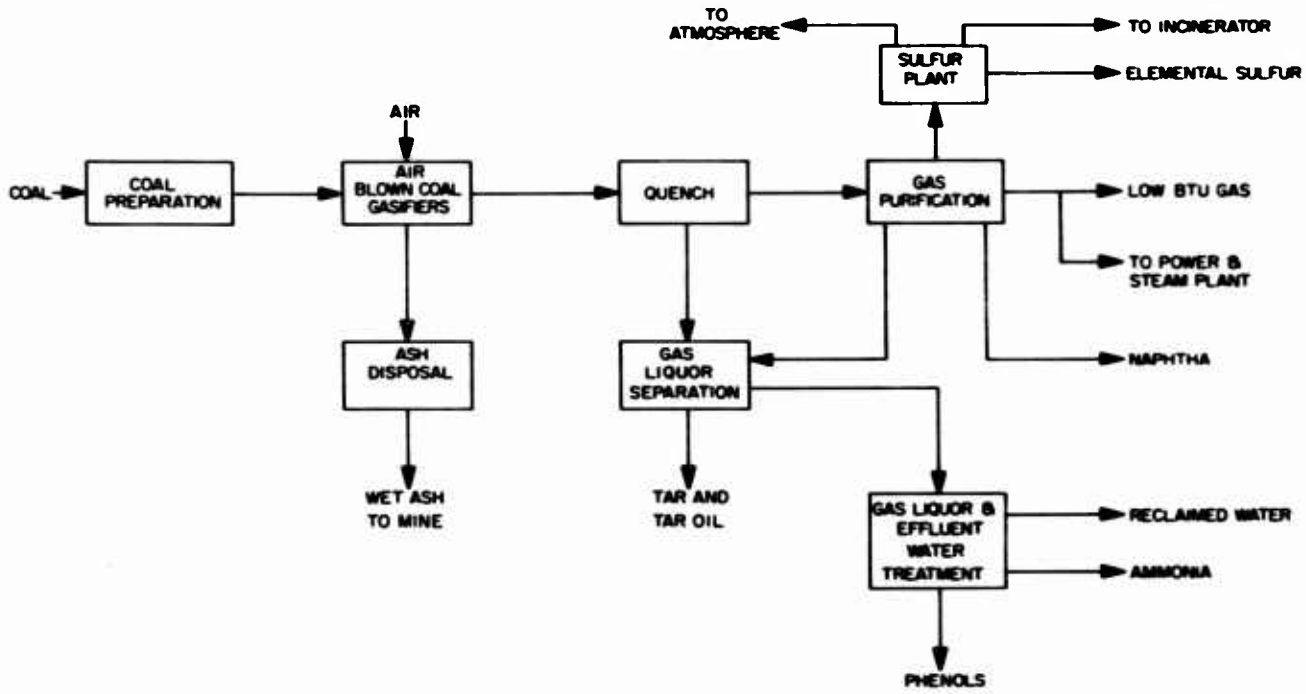

Figure C2. Lurgi Low-Btu Process Flow Sheet

COAL GASIFICATION

KOPPERS-TOTZEK PROCESS

Low-Btu Gas

BACKGROUND

Developer: Koppers Company

Status: Commercial plants in existence around the world

Compatible Coal Types: Bituminous and Subbituminous

CONCEPTUAL DESIGN Plant produces 290 MSCFD of medium - Btu Gas

Coal Preparation Operation:

Coal Type: Navajo Subbituminous

Coal Analyses:

Proximate, wt %		Ultimate (MAF), wt %	
Fixed Carbon	35.0	C	76.72
Volatiles	31.2	H	5.71
Ash	17.3	N	1.37
Moisture	16.5	S	0.95
		O	15.21
		Other	0.04

Heating Value, Btu/lb: 8830 (MAF)
7300 (As Received)

Size of Coal Feed:

Pretreatment: Drying and grinding, 10% (less than 200 mesh)

Feed System: Screw feed mixed with steam and oxygen

Gasifier Description and Operating Conditions:

Type:	Entrained slagging
Oxidant Supplied:	Oxygen
Temperature:	2700°F
Pressure:	15 psig

Input to Gasifier:

Coal:	479,300 lb/hr (2% moisture)
Steam:	84,700 lb/hr
Oxygen:	326,000 lb/hr

Output from Gasifier:

Raw, dry gas from gasifier and quench:

CO	575,300 lb/hr
H_2	22,200 lb/hr
CO_2	88,900 lb/hr
CH_4	600 lb/hr
H_2S	3,400 lb/hr
COS	700 lb/hr
N_2	11,000 lb/hr
Higher Hydrocarbon	0 lb/hr

By-products from Gasifier:

Ash	111,500 lb/hr
Tar & Oil	Negligible
Phenols	Negligible
NH_3	Negligible
Hydrocarbon liquids	Negligible

Net dry product gas:

Volume of Product Gas	290 MSCFD
Heating Value:	303 Btu/SCF
Pressure of Product Gas:	166 psia (after compression)

Gas Analysis (Volume %):

CH_4	0.1
H_2	32.6
N_2	1.2
CO_2	5.2
CO	60.9
H_2S+COS	0.03

Other Information:

Net Process Water Consumption: 0.4 MGD

Type of Acid Gas Removal: Methyl diethanolamine

Sulfur Recovery:

Type: Claus
Total Produced: 3,330 lb/hr

Thermal Efficiency: 53.0% to 69.0%

Process Description

Coal is pretreated by drying and then pulverized to about 70 percent through 200 mesh. The drying medium, which is either hot flue gas or Koppers-Totzek gas burned with air, is circulated through the mill. The resulting coal dust is conveyed continously by fluidization to service bins above the gasifier. From each bin, coal passes to a feed bin from which the coal is screw fed to the mixing head. At the mixing head a combination of steam and oxygen entrain the coal particles and transport the dust at velocities greater than the speed of flame propagation. Low-pressure steam produced in the gasifier jacket is used as the process steam in the gasifier.

Carbon is oxidized by the steam and air entering the gasifier and hydrogen is produced. The high temperature of operation causes slagging of the ash. Over half the slag flows down the gasifier walls into quench tanks. The remainder of the ash leaves the gasifier as a fine fly ash entrained in the exit gas. Water sprays remove the heavy particles and cool the gas. Final gas cleaning is accomplished by two Thesen disintegrators arranged in series. After compression the gas is scrubbed with amine to remove H_2S for sulfur recovery (see Figure C3).

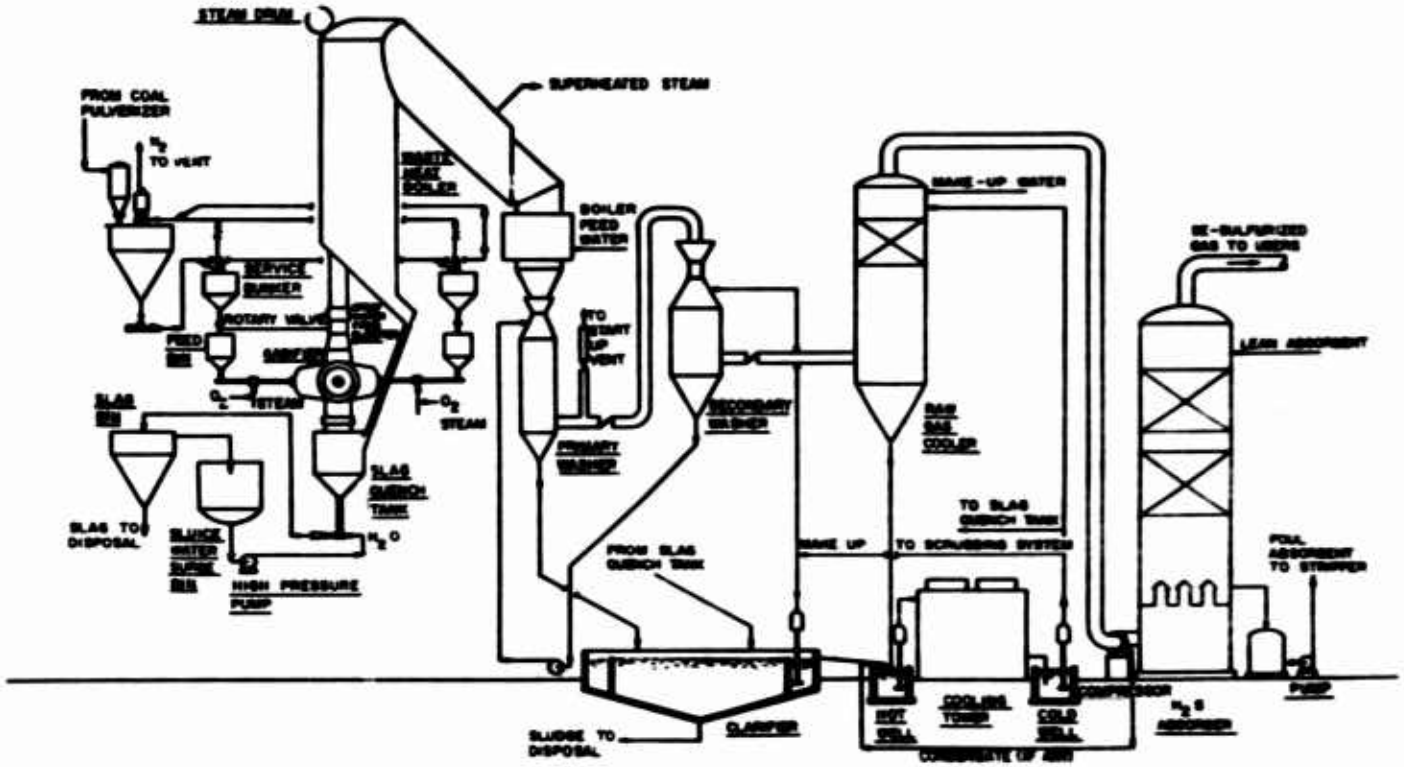

Figure C3. Koppers-Totzek Gasification Process

COAL GASIFICATION

WINKLER PROCESS

Medium-Btu Gas

BACKGROUND

Developer:	Davy Powergas, Inc.
Status:	The process has been in successful commercial operation at 16 plants in a number of countries, using a total of 36 generators. Some plants are still operating, with the largest having output of 26.4 MSCFD. The last installation was in 1960.

CONCEPTUAL DESIGN — Plant producing 886 MSCFD medium-Btu gas.

Coal Preparation

Coal Type: Lignite

Coal Analyses:

Proximate, wt%		Ultimate (MAF), wt%	
Fixed Carbon	N.R.	Carbon	71.2
Volatile Matter	N.R.	Hydrogen	5.4
Ash	14.5	Nitrogen	0.8
Moisture	13.3	Oxygen	18.3

Heating Value, Btu/lb: 9320 (MAF)
7970 (As received)

Preparation: Coal is dried and ground to minus 1/4 in. Pre-treatment necessary for caking coals.

Feed System: Variable speed screw feeder.

Gasification Reactor Description and Operating Conditions

Type: Fluidized Bed

Temperature: 1700°F

Pressure: 30 psia

Input to Gasifier Reactor:

	lb/hr
Lignite	1,675,000 (8.7% moisture)
Steam	820,800
Oxygen	961,300

Output from Gasifier Reactor:

Raw Dry Gas	lb/hr	Vol%
CO	1,094,800	35.2
H_2	85,700	38.6
CO_2	1,066,500	21.8
CH_4	32,000	1.8
H_2S	51,250	0.4
COS	10,000	0.2
N_2	34,000	1.1

By-Products	lb/hr
Char	372,500
Tar and Oil	-------
Phenols	-------
NH_3	-------
Higher Hydrocarbons	-------

Analysis of Net Dry Product Gas, Vol%

CH_4	2.0
H_2	42.7
N_2	1.2
CO_2	15.1
CO	38.9
H_2S+COS	0.08

Heating Value: 282 Btu/SCF

Pressure: 15 psia

Analysis of Char, wt% Dry

Not specified

Heating value:	4,810 Btu/lb

Other Information

Net process water consumption:	3.9 MGD
Type of acid gas removal:	Hot carbonate (Benfield)
Type of sulfur recovery:	Claus
Thermal efficiency:	66.8 - 68.9%

Process Description

The Winkler fluidized-bed gasifier is shown in Figure C4. Crushed coal (minus 1/4 in.) is dried and fed by a screw feeder into the side of the reactor. Coal reacts with oxygen and steam to produce offgas rich in carbon monoxide and hydrogen. The fluidized bed operates at 1,500°-1,850°F depending on coal type. Pressure is approximately atmospheric.

Because of the high temperatures, all tars and heavy hydrocarbons are reacted. About 70 percent of the ash is carried over by gas and 30 percent of it is removed from the bottom of the gasifier by the ash screw. Unreacted carbon carried by the gas is converted by secondary steam and oxygen in the space above the fluidized bed.

As a result, maximum temperature occurs above the fluidized bed. To prevent ash particles from melting and forming deposits in the exit duct, gas is cooled by the radiant boiler section before it leaves the gasifier. Raw gas leaving the gasifier is passed through an additional waste-heat recovery section. Fly ash is removed by cyclones, followed by a wet scrubber, and finally an electrostatic precipitator. Gas is then compressed and purified.

Oxygen consumption for the Winkler process is intermediate between that of the moving-bed Lurgi and the entrained-bed Koppers-Totzek. While the Winkler does not produce the tars, phenols, and light oils that the Lurgi does, like Koppers-Totzek, it has been operated commercially only at atmospheric pressure. Studies of estimated results under conditions of 1.5-atm pressure have been made.

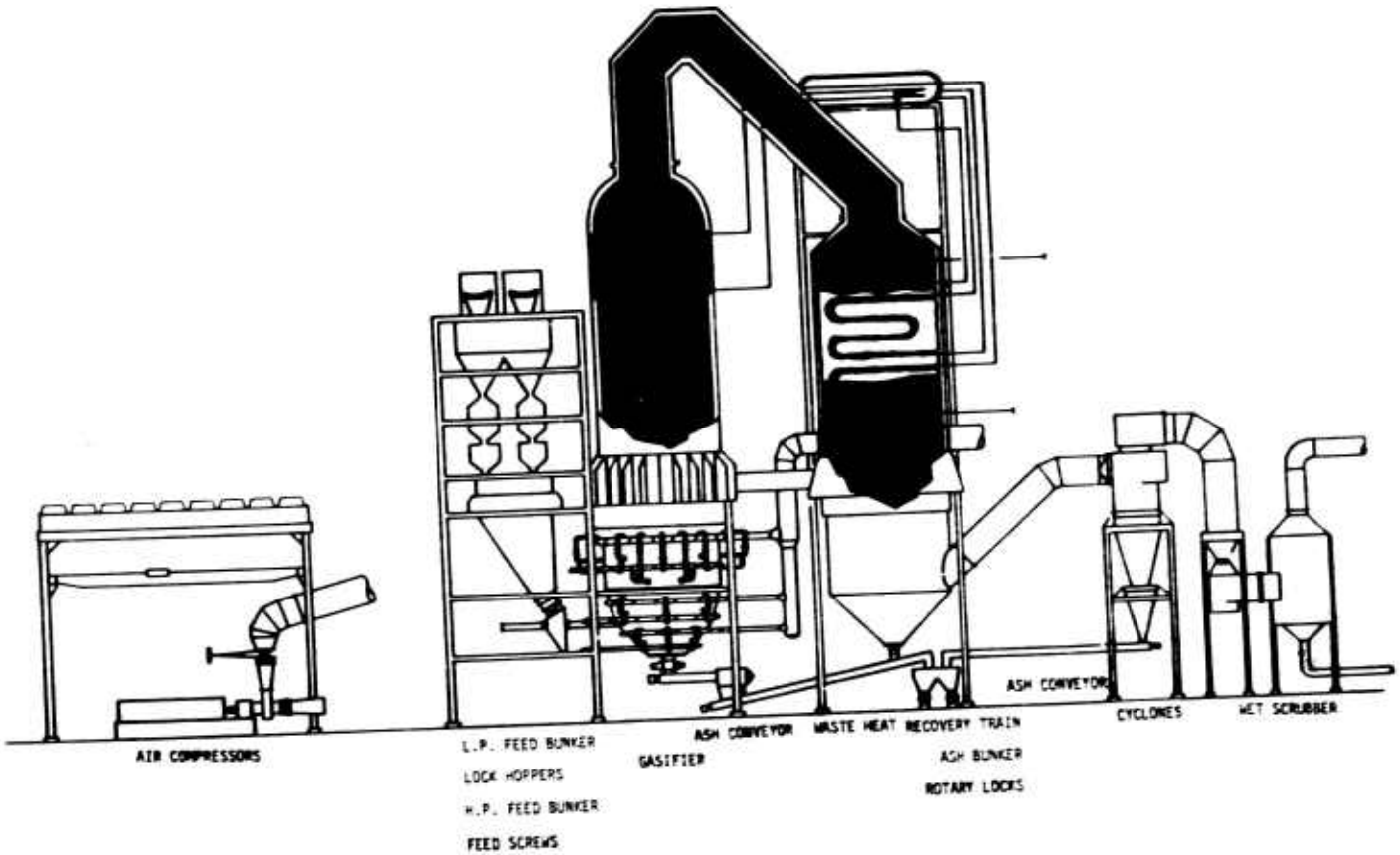

Figure C4. Winkler Coal Gasifier Process Schematic

COAL GASIFICATION

WELLMAN-GALUSHA PROCESS

Low- and High-Btu Gas

BACKGROUND

Developer:	Wellman Engineering Company
Status:	Two units have been operated commercially in the United States on bituminous coal

---

CONCEPTUAL DESIGN

No Data Available.

Process Description

Coal gasifiers of the fixed-bed variety were once common in industrial complexes. One type that is now commercially available is Wellman-Galusha Generator shown schematically in Figure C5.

Crushed coal (3/16-5/16 in.) is dried and fed from the fuel bin by a lock-hopper system or through a rotary-drum feeder. A steam/oxygen mixture is introduced through a revolving grate at the bottom. Gasifiers are available with and without an agitator. The agitator producer has a slowly revolving horizontal arm which spirals vertically below the surface of the fuel bed. The agitator reduces channeling and maintains a uniform bed. The gasifier features internal jacketed side walls and a connecting overhead "steam dome" in which the steam needed for gasification is produced. The units built in the past were about 10 ft. in diameter.

The temperature of the gas leaving the gasifier is in the range of 1,000° to 1200°F depending on coal type. Pressure is about atmospheric. Ash is removed continuously through a slowly revolving eccentric grate at the reactor bottom.

Substitution of air for oxygen to the gasifier will produce a low-Btu raw gas. Raw gas leaving the gasifier is passed through a waste-heat-recovery system. Ash, which is carried over by gas, and tar are removed by scrubbing. The gas is then compressed. Pipeline quality gas can be produced by adding shift, purification, methanation, and dehydration.

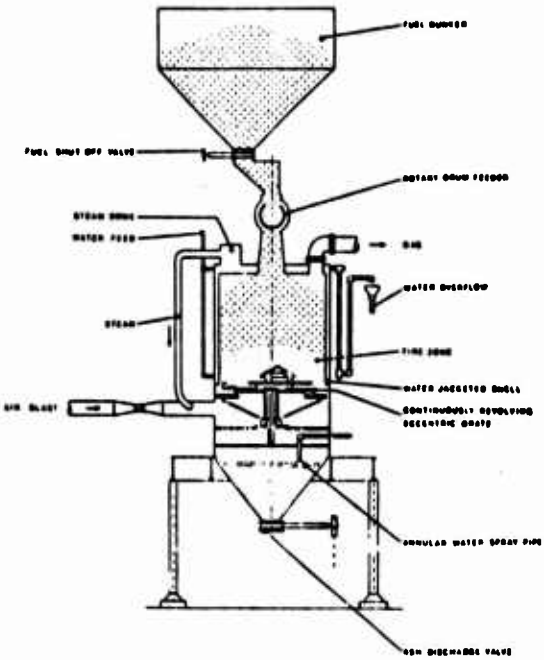

Figure C5. Wellman-Galusha Gasifier

COAL GASIFICATION

COMBUSTION ENGINEERING PROCESS

Low-Btu Gas

BACKGROUND

Sponsor:	ERDA Combustion Engineering Electric Power Research Institute
Developer:	Combustion Engineering
Contractor:	Combustion Engineering (Design, Construction and Operation of Process Demonstration Unit)
Contract Value:	ERDA - $15.0 million Others - $6.9 million
Status:	Detailed engineering and construction of the 5 tons of coal per hour process demonstration unit (PDU) is scheduled to be completed in spring 1977, and operations are expected to continue until mid-1978. PDU is located at Windsor, Connecticut.

CONCEPTUAL DESIGN No Data Available

Process Description

The Combustion Engineering gasification process is based on an air-blown, atmospheric-pressure, entrained-bed gasifier. A schematic of the process is provided in Figure C6. Some pulverized coal and recycled char are fed to the combusiton section of the gasifier and burned to supply the heat necessary for the endothermal gasification reaction. In the combustion section, nearly all of the ash in the system is converted to molten slag, which is drawn off the bottom of the gasifier. The balance of the pulverized coal plus steam are fed to the reduction portion of the gasifier and are injected into the hot gases entering the reductor from the combustor. The gasification process takes place in the entrainment portion of the reactor where the coal is devolatized and reacts with the hot gases to produce the desired product gas. This 1,600°F product gas is cooled to 300°F. At this point, the gas contains solid particles and hydrogen sulfide that must be removed. Solids are removed and recycled by means of cyclone separators and venturi scrubbers. Hydrogen sulfide is removed and elemental sulfur is produced by the Stretford process. The clean low-Btu gas (127 Btu per standard cubic foot) can then be delivered to the burners of power boilers, gas turbines, or combinations of the two in a combined-cycle power generator.

Substitution of oxygen for air in the gasifier combustor will increase the heating value of product gas from 127 to 285 Btu per standard cubic feet of gas. The main virtue of the atmospheric gasification system is that development work is necessary on the operation and control of the gasifier only. All other components are commerically available items with predictable operating characteristics.

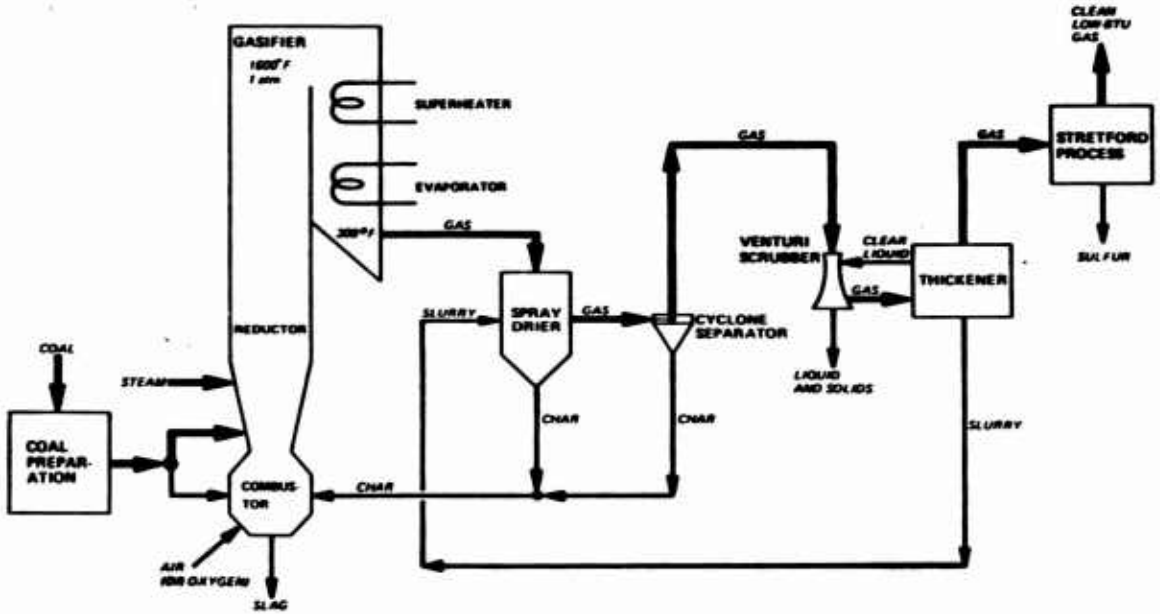

Figure C6. Low-Btu Gasification of Coal for Electricity Generation in the Combustion Engineering Process

COAL GASIFICATION

WESTINGHOUSE PROCESS

Low-Btu Gas

BACKGROUND

Sponsor:	ERDA Public Service Indiana Westinghouse Electric Corp. Amax Coal Company Bechtel, Inc. Peabody Coal Company/Kennecott Copper Corporation
Developer:	Westinghouse Electric Corp.
Contractor:	PDU Operated by Westinghouse Electric Corporation. Detailed Engineering, Design and Construction by Bechtel Corp.
Contract Value:	ERDA - $9.7 million Others - $4.2 million
Status:	Work is now under way with a 1,200 lb/hr process development unit. Design and construction of a 120 tons of coal per day pilot plant is scheduled for completion in 1977. The overall program is directed toward the operation of a combined-cycle power plant using a commercial-sized gasifier with a capacity of about 1,200 tons of coal per day. Plant is located at Waltz Mill, Pennsylvania. Public Service of Indiana has designated its Dresser Station, near Terre Haute, Indiana, as the site for the commercial plant.
Compatible Coal Types:	Not specified.

CONCEPTUAL DESIGN

No Data Available

Process Description

A schematic of the advanced coal gasification system for electric power generation is provided in Figure C7. The main reactor subsystems are the devolatizer/desulfurizer and the gasifier/agglomerator. Dry coal is introduced into the devolatizer through a central draft tube in which coal, hot gases, and recirculating char and dolomite flow upward at a velocity of 40 ft/sec. The hot solids recirculate downward in the annulus around the draft tube at weight rates of about 100 times the coal feed rate to prevent agglomeration of the fresh coal as it passes through its sticky phase. Dense dry char collects in the fluidized bed at the top of the draft tube and is withdrawn at this point. Dolomite or calcium oxide (sorbent) is added to the fluidized bed to absorb the sulfur present as hydrogen sulfide in the fuel gas. Spent dolomite is withdrawn from the bottom of the reactor and regenerated. Heat is supplied primarily by the high-temperature fuel gas produced in the gasifier-combustor. After separation of fines and ash, product gas is cooled and scrubbed with water for final purification.

Gasification of char produced in the devolatizer/desulfurizer is carried out in the gasifier/agglomerator. In the lower portion of the gasifier, char fines produced in the devolatizer are combusted with air to provide the basic heat source for the process. Product gases of CO_2 and steam are produced. In the upper portion of the gasifier, steam reacts with coarse char to form the CO and H_2 rich stream which goes to the devolatizer. The combustor, operating at about 2,100°F, also causes ash to reach its plastic stage, agglomerate, and fall out of the fluidized bed of char. It is removed at the bottom of the reactor.

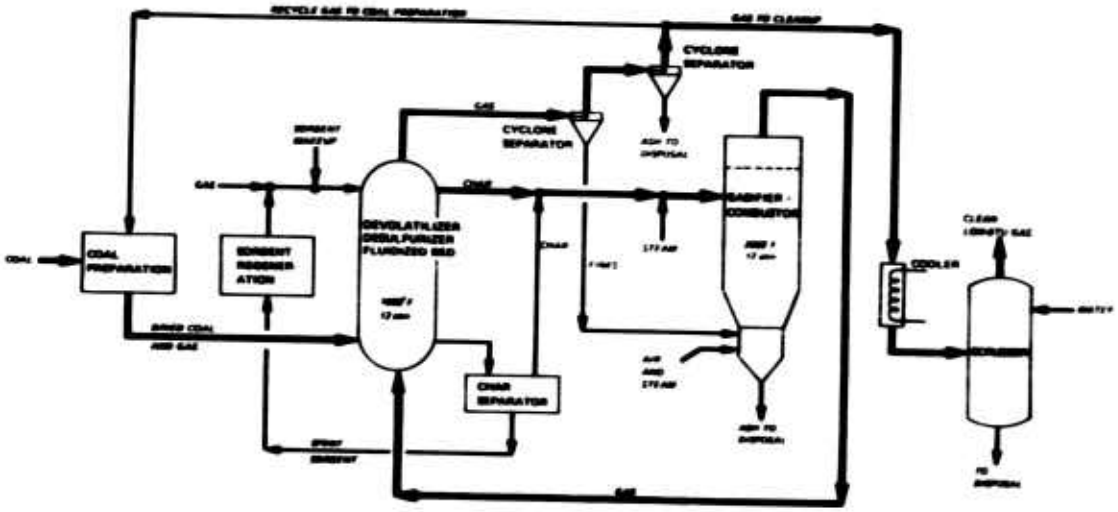

Figure C7. Advanced Coal Gasification System for Electric Power Generation in the Westinghouse Process

APPENDIX D

HIGH-BTU GASIFICATION PROCESSES

Descriptions of the major high-Btu gasification process follow.

COAL GASIFICATION

LURGI PROCESS

High-Btu Gas

BACKGROUND

Developer:	Lurgi Mineralotechnik g.m.b.h.
Announced Commercial and Demonstration Plants: (As of May 15, 1976)	Listing follows flow sheet

---

CONCEPTUAL DESIGN

Plant producing 251 MSCFD high-Btu gas

Coal Preparation

Coal Type: Navajo subbituminous

Coal Analyses:

Proximate, wt%		Ultimate (MAF), wt%	
Fixed carbon	35.0	Carbon	76.72
Volatile Matter	31.2	Hydrogen	5.71
Ash	17.3	Nitrogen	1.37
Moisture	16.5	Sulfur	0.95
		Oxygen	15.21

Heating Value, Btu/lb: 8872 (MAF)
7340 (As Received)

Preparation: Coal is dried and ground to 1-3/4" x 3/16". Caking coals require pretreatment.

Feed System: Lock hopper

Gasification Reactor Description and Operating Conditions

Type:	Counter-current moving bed
Temperature:	Top: 1100-1400°F Bottom: 1700°F
Pressure:	420 psia

Input to Gasifier Reactor:

	lb/hr
Coal	1,722,200
Steam	1,762,200
Oxygen	468,500

Output from Gasifier Reactor:

Raw Dry Gas	lb/hr	Vol%
CO	535,500	19.5
H_2	76,500	5.0
CO_2	1,243,800	29.0
CH_4	174,000	11.2
H_2S	10,700	0.3
COS	-------	-----
N_2	8,800	0.3
Higher Hydrocarbons	28,900	0.9

By-Products	lb/hr
Ash	314,000
Tar & Oil	126,400
Phenols	10,100
NH_3	16,900
Hydrocarbon Liquids	18,400

Analysis of Net Dry Product Gas, Vol%

CH_4	95.9
H_2	0.8
N_2	1.2
CO_2	2.0
CO	0.1
H_2S+COS	

Heating Value:	972 Btu/SCF
Pressure:	915 psia

Analysis of Char, wt% Dry

Not specified

Heating Value:

Other Information

Net Process Water Consumption:	0.8 MGD
Type of Acid Gas Removal:	Cold methanol (Rectisol)
Type of Sulfur Recovery:	Stretford
Thermal Efficiency:	52.9-67.3%

Process Description

The Lurgi gasification process for high-Btu gas is shown in Figures D1 and D2. The Lurgi gasifier is classified as a high-pressure (300-500 psig), moving-bed, nonslagging steam-oxygen system producing synthesis gas from coal. The equipment consists of a double-walled pressure vessel whose walls form a water jacket to protect the outer pressure vessel wall from high reaction temperatures. Sized coal enters the top through a distributor and a mixture of steam and oxygen enters the bottom. Ash is discharged from the bottom of the reactor through a rotating grate into a lock hopper. Coal moving downward from the top of the reactor will be dried, devolatized, gasified, and oxidized in succession as the temperature increases.

Hot crude gas leaving the gasifier contains primarily carbon dioxide, carbon monoxide, hydrogen, and methane. To achieve the proper ratio of CO/H_2 for methanation, a portion of the crude gas is passed through a shift conversion unit. The converted gas and the bypass are then cooled to remove water and liquid by-products before gas purification. In gas purification, carbon dioxide and gaseous sulfur compounds are removed from the gas by the Rectisol process. The purified gas is then methanated to high-Btu product gas. The waste gas produced by Rectisol is treated by a Stretford unit to recover the by-product hydrogen sulfide as elemental sulfur.

The water and liquid by-products removed from the crude gas are further processed to recover tar, tar oil, crude phenol, ammonia, and water for use in the plant cooling system and other in-plant uses. Fuel requirements for the plant and process steam are provided by an air-blown coal-gasification unit which provides a clean, low-heating-value gas.

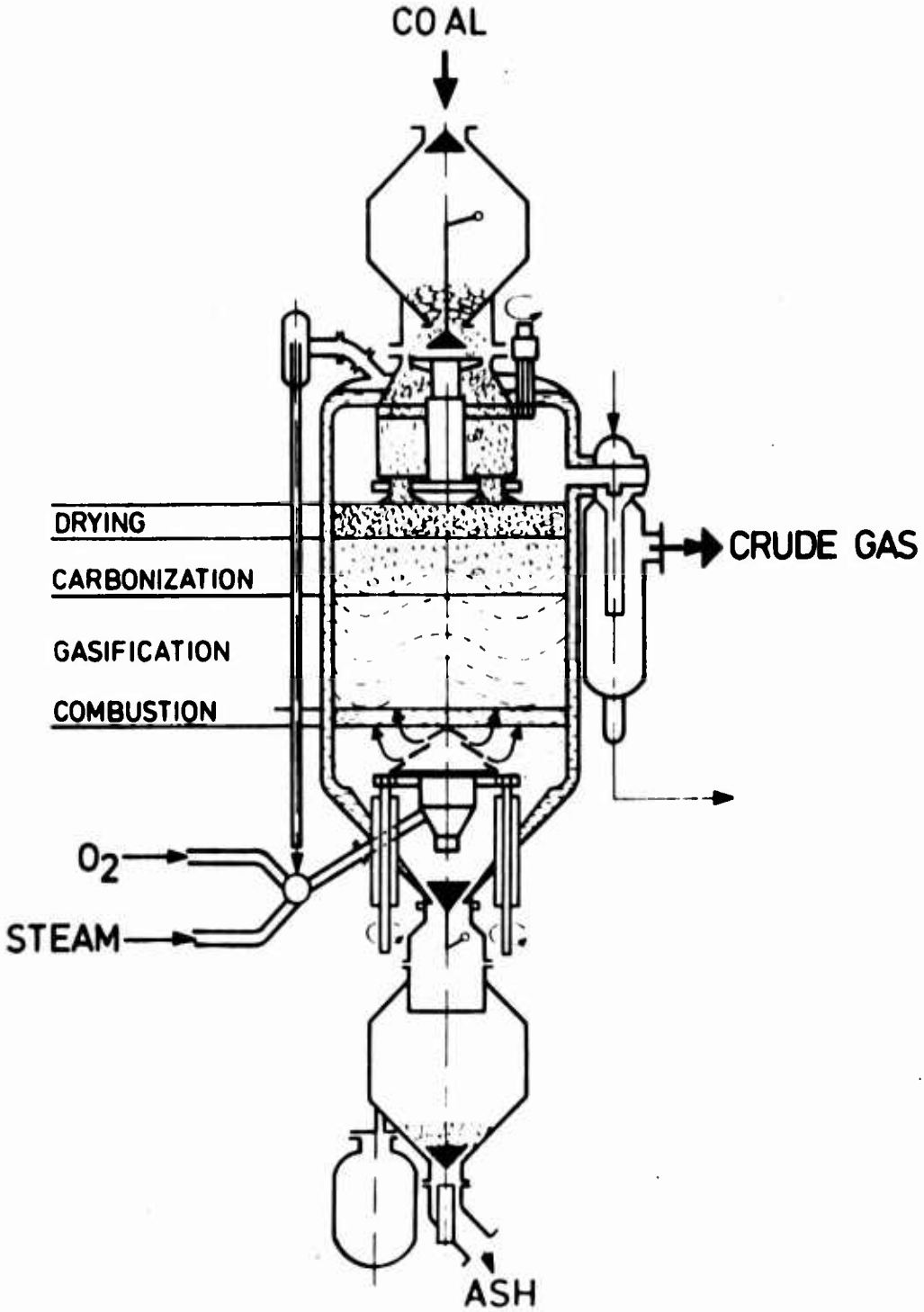

Figure D1. Lurgi High-Btu Gasifier

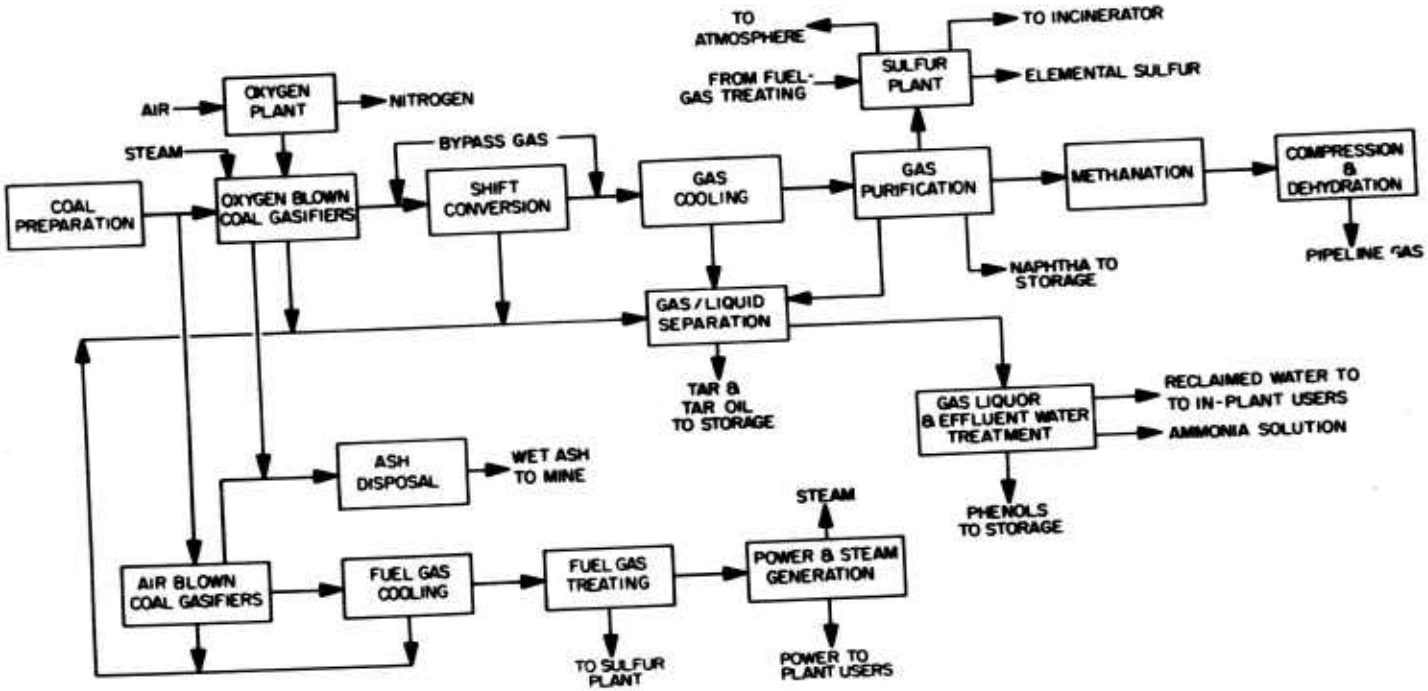

Figure D2. Lurgi High-Btu Gasification Process

COAL GASIFICATION

CARBON DIOXIDE ACCEPTOR PROCESS

High-Btu Gas

BACKGROUND

Sponsors:	ERDA and AGA
Developer:	Conoco Coal Development Company
Contractor:	Conoco Coal Development Company
Contract Value: $ M (Cost Share):	ERDA - $2.0 Million AGA - $1.0 Million
Status:	A pilot plant is located in Rapid City, South Dakota. The plant converts 40 tons of coal daily into 500,000 SCFD of high-Btu gas.

CONCEPTUAL DESIGN (263 MSCFD high-Btu gas)

Coal Preparation & Storage Operation

Coal Type: Lignite

Coal Analysis:

Proximate, wt %		Ultimate (MAF), wt %	
Fixed Carbon	----	C	70.53
Volatiles	----	H	4.71
Ash	7.47	N	1.17
Moisture	33.67	S	1.00
		O	22.59

Heating Value, Btu/lb: 7375 (MAF)
6825 (As Received)

Pretreatment: Moisture content lowered to 5% in fluidized preheater, coal ground to less than 1/8"

Feed System: Lock Hopper

Gasifier Description & Operating Conditions

Type: Fluid bed
Temperature: 1500°F
Pressure: 150 psia
Input to Gasifier:

Lignite:	1,413,400 lb/hr (0% moisture)
Steam:	1,653,700 lb/hr
Air: (For regeneration of acceptor)	3,373,400
Dolomite: (Regenerated)	7,164,000 lb/hr

Main Output from Gasifier:

Raw dry gas from gasifier and quench:

CO	431,600 lb/hr
H_2	145,000 lb/hr
CO_2	308,500 lb/hr
CH_4	98,900 lb/hr
H_2S	1,142 lb/hr
COS	Not Reported
N_2	6,200 lb/hr
Higher Hydrocarbons	Not Reported

Other by-products from gasifier and quench:

Ash	See section below
Tar & Oil	----------
Phenols	----------
NH3	----------
Hydrocarbon Liquids	----------
Char	496,800 lb/hr

Char Analysis:

	wt %
C	63.41
H	0.54
O	2.26
S	0.97
N	0.25
Ash	32.57
Heating Value	9,450 Btu/lb

CO_2 Acceptor Regeneration Section

Input to Regeneration Section

Char	496,810 lb/hr
Reacted acceptor	7,977,000 lb/hr
Air	44,500,000 SCFH
Dolomite makeup	254,454 lb/hr
CO_2	600,000 SCFH
Water	15,800 lb/hr

Output from Regeneration Section

Regenerated acceptor	7,164,000 lb/hr
Carbonated ash slurry (50% water)	466,000 lb/hr
Acid gas	450,000 SCFH
Flue gas	57,300,000 SCFH

Net Dry Product Gas Analyses:

Volume of Product Gas	263 MSCFD
Heating Value	972 Btu/SCF
Pressure of Product Gas	1000 psia
Gas Analysis (Volume%):	
CH_4	93.0
H_2	4.8
N_2	0.8
CO_2	1.3
CO	0.1

Net Process Water Usage:	1.5 MGD
Type of Acid Gas Removal:	----------

Sulfur Recovery:

Type:	----------
Quantity Recovered:	9,920 lb/hr
Thermal Efficiency:	60.2%-76%

Process Description

In the carbon dioxide acceptor process (see Figure D3), subbituminous coal is ground to 1/8 in., dried to 5% moisture, and charged in a fluidized-bed preheater. The preheated coal is then fed into the gasifier close to the bottom of a fluidized bed of char. Rapid devolatization is followed by gasification of the hydrocarbon. The necessary heat for the endothermic gasification reactors is supplied by the carbon dioxide acceptor reactor.

The manner in which an acceptor (limestone or dolomite) is circulated between the gasifier and the regenerator to supply this heat is the unique feature of the CO_2 acceptor process. The acceptor, reduced to approximately 6x14 mesh, enters the gasifier above the fluidized char bed, falls through the bed, and collects in the gasifier boot. Hydrogasification-required steam enters through the boot and the distributor ring, which is a sharp, stable interface between the char and the char-acceptor mixture in the bed. Dolomite, consumed at startup to avoid plugging, is replaced by fresh acceptor once circulation rates are determined and process operating temperature and pressure are reached. Product gas passes through a steam-generating heat exchanger and goes to the gas cleanup section.

The acceptor regenerator calcines the consumed acceptor. Recarbonated acceptor from the gasifier flows through a standleg and is conveyed pneumatically to the regenerator bottom. Char, a product of gasification, is recycled to the regenerator where it is burned in the presence of air. The regenerator temperature is boosted to 1850°F. Due to reversal of the carbon dioxide acceptor reaction, the acceptor is calcined. The regenerated acceptor is returned to the gasifier via a standleg. Flue gas from the regenerator goes through a heat exchanger, generating steam for the gasifier and the air compressor.

The flue gas from the regenerator and the product gas are cleaned. The clean synthesis product gas is sent to the methanation unit which consists of a shift converter, a carbon dioxide absorber, hydrodesulfurizer, a zinc oxide sulfur guard, and a packed-tube methanator. A Dowtherm system is used for temperature control and heat removal for the strongly exothermic methanation reaction. The methanation process increases the heating value of the gas to pipeline quality.

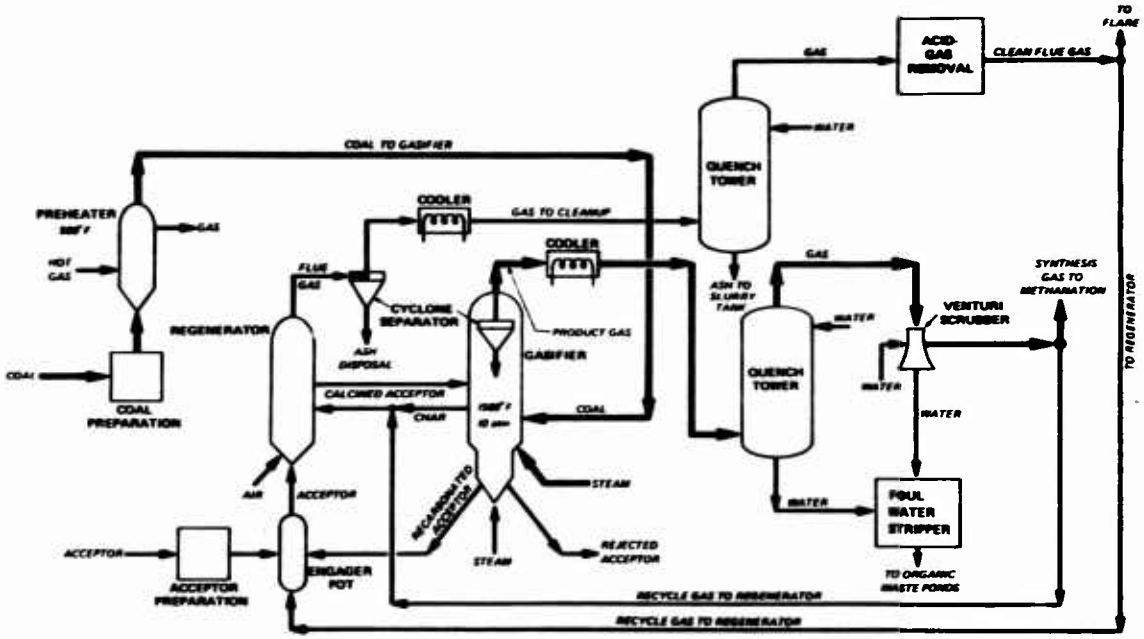

Figure D3. CO_2 Acceptor Gasification Process

COAL GASIFICATION

HYGAS PROCESS

High-Btu Gas

BACKGROUND

Sponsor:	ERDA and the American Gas Association
Developer:	Institute of Gas Technology (IGT)
Contractor:	Institute of Gas Technology Pilot Plant Engineering and Construction by Procon Incorporated. Preliminary Engineering by Bechtel Corporation.
Contract Value:	ERDA - $29.2 million Others - $10.1 million
Status:	75 tons/day pilot is currently being operated by IGT. Steam-oxygen system complete, Fiscal '76. Preliminary demonstration plant design complete. Plans have been announced to build an $18 million pilot plant facility to demonstrate the steam-iron process for H_2 generation. Pilot plant located in Chicago, Illinois.
Compatible Coal Types:	Bituminous, Subbituminous, and Lignite.

CONCEPTUAL DESIGN	Plant producing 260 MSCFD high-Btu gas

Coal Preparation

Coal Type: Bituminous, Illinois No. 6

Coal Analyses:

Proximate, wt%		Ultimate (MAF), wt%	
Fixed Carbon	46.52	Carbon	78.45
Volatile Matter	30.36	Hydrogen	5.43
Ash	10.79	Nitrogen	1.53
Moisture	6.48	Sulfur	4.75
		Oxygen	9.85

Heating Value, Btu/lb: 12600 (MAF)
11240 (As Received)

Preparation: Coal is dried to 1 to 2 percent moisture and ground to less than 8 mesh

Feed System: Coal-oil slurry

Gasification Reactor Description and Operating Conditions

Type: Fluidized bed, 4 sections

Temperature:

Section	°F
Top	600
2nd	1250
3rd	1750
Bottom	1900

Pressure: 1200 psia

Input to Gasifier Reactor:

	lb/hr
Coal	1,057,900 (0% moisture)
Steam	981,700
Oxygen	270,300

Output from Gasifier Reactor:

Raw Dry Gas	lb/hr	Vol%
CO	650,100	28.5
H_2	48,300	29.6
CO_2	763,800	21.3
CH_4	244,200	18.7
H_2S	43,300	1.6
COS	700	0.01
N_2	1,700	0.11
Higher Hydrocarbons	15,100	0.23

By-Products	lb/hr
Char	138,900
Tar & Oil	--------
Phenols	1,300
NH_3	11,300
Hydrocarbon Liquids	39,800

Analysis of Net Dry Product Gas, Vol%

CH_4	93.0
H_2	6.6
N_2	0.2
CO_2	0.1
CO	0.1

Heating Value: 965 Btu/SCF

Pressure: 958 psia

Analysis of Char, wt% Dry

Not specified

Heating Value: 1,488 Btu/lb

Other Information

Net process water consumption:

Hydrogen Generation Process	MGD
Steam/Iron	3.0
Steam/Oxygen	1.8

Type of acid gas removal: Cold methanol (Rectisol)

Type of sulfur recovery: Claus

Thermal efficiency: 60.3 - 70.5%

Process Description

A diagram of the HYGAS process is provided in Figure D4. Raw coal is crushed, dried, and pretreated (in case of caking coals) at 660°F to 750°F and atmospheric pressure. Prepared coal is mixed in a slurry tank with light aromatic oil recovered in the process. Noncaking coal is fed directly to the slurry tank. The coal-oil slurry is pumped by a centrifugal pump to 100 atm and then sprayed into the light oil vaporizer section of the gasifier, where most of the light oil flashes off and is recovered downstream and returned to the process. The coal passes to the next stage operated at 1300 to 1500°F where approximately 20 percent of coal is converted to methane by the hot gas from the bottom stage of the hydrogasifier. Part of the devolatized char is hydrogasified with hydrogen and steam at 1700°F. An additional 25 percent of the initial coal is converted to methane in this hydrogen-rich environment. Char produced from the hydrogasifier is used for hydrogen production in one of three alternate processes: Electrothermal, Steam-Oxygen, or Steam-Iron. (Development work on the Electrothermal Process has been terminated due to the high cost of electricity.) The product gas (containing methane and other raw gases, particulates, trace elements, and water and oil vapors) from the reactor is quenched, purified, and passed to the methanator. The ratio of hydrogen to carbon monoxide in the purified gas entering the methanator is adjusted to about three to one. The purified gas passes through a nickel catalyst methanation reactor at controlled temperature and is converted to pipeline-quality gas with an average heating value of 965 Btu per cubic foot.

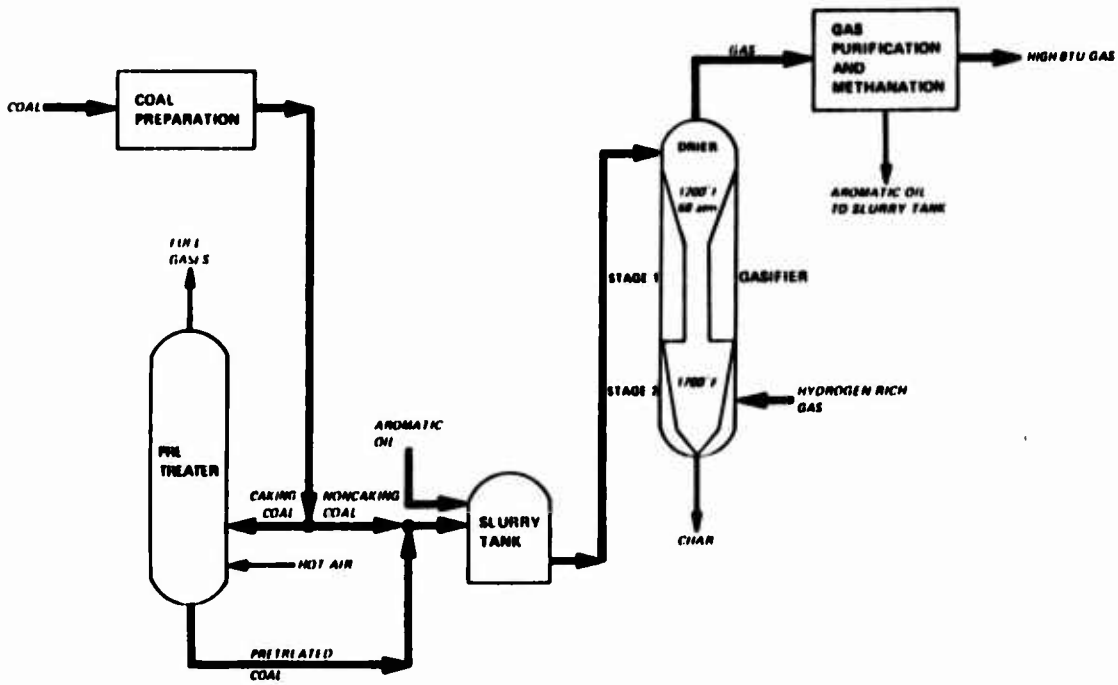

Figure D4. HYGAS Process

COAL GASIFICATION

BIGAS PROCESS

High-Btu Gas

BACKGROUND

Sponsor:	ERDA and American Gas Association
Developer:	Bituminous Coal Research, Inc.
Contractor:	Project managed by Phillips Petroleum Company. Responsibility of constructing and operating the pilot plant awarded to Stearns-Roger, Inc. Gasifier designed and built by Babcock and Wilcox.
Contract Value:	ERDA - $58.1 million Others - $11.5 million
Status:	120 tons/day pilot plant was scheduled for completion by the second quarter of 1976. Located in Homer City, Pennsylvania.
Compatible Coal Types:	Bituminous, Subbituminous, and Lignite

---

CONCEPTUAL DESIGN

Plant producing 250 MSCFD high-Btu gas

Coal Preparation

Coal Type: Bituminous, Western Kentucky No. 11

Coal Analyses:

Proximate, wt %		Ultimate (MAF), wt %	
Fixed Carbon	45.4	Carbon	80.20
Volatile Matter	39.5	Hydrogen	5.50
Ash	6.7	Nitrogen	1.62
Moisture	8.4	Sulfur	4.10
		Oxygen	8.58

Heating Value, Btu/lb	12330 (MAF) 11500 (As Received)
Preparation:	Coal is dried to 2 percent moisture and ground to 70 percent less than 200 mesh
Feed System:	Coal-water slurry

Gasification Reactor Description and Operating Conditions

Type:	Top Entrained Bottom Slagging
Temperature:	Top 1700°F Bottom 3000°F
Pressure:	1200 psia

Input to Gasifier Reactor:

	lb/hr
Coal	946,300 (1.3% moisture)
Steam	409,700
Oxygen	497,600

Output from Gasifier Reactor:

Raw Dry Gas	lb/hr	Vol %
CO	1,024,300	43.5
H_2	40,900	24.5
CO_2	512,300	14.0
CH_4	207,300	15.5
H_2S	40,600	1.4
COS	-------	----
N_2	15,300	0.6
Higher Hydrocarbons		

By-Products	lb/hr
Ash	68,400
NH_3	7,700
Tar and Oil	------
Phenols	------
Hydrocarbon Liquid	------

Analysis of Net Dry Product Gas, vol %

CH_4	91.8
H_2	5.1
N_2	1.9
CO_2	1.1
CO	0.1
H_2S+SO_2	----

Heating Value: 943 Btu/SCF

Pressure: 1075 psia

Analysis of Char, wt % Dry

Not Specified

Heating Value: --------

Other Information

Net process water consumption: 1.5 MGD

Type of acid gas removal: Hot carbonate (Benfield)

Type of sulfur recovery: Claus

Thermal efficiency: 61.8-66.8%

Process Description

The BIGAS process is a two-stage, high-pressure, oxygen-blown system using pulverized coal and steam in entrained flow. A diagram of the BIGAS process is provided in Figure D5. Basically, there are four major steps in the process: coal preparation, slurry preparation, gasification, and gas purification and methanation.

Coal preparation consists of pulverizing the coal so that approximately 70 percent will pass through 200 mesh. Both particle size and particle size distribution can vary, however. The coal, mixed with water, is fed to a centrifuge, where the solids are concentrated into a cake of 50 to 60 percent solids. The cake is then slurried in the blend tank to the consistency used in the process and the slurry is contacted with hot inert recycle gas for nearly instantaneous vaporization of the surface water. The coal is conveyed to a cyclone separator by the stream of water vapor and inert gas, then to the gasifier. The inert gas is recovered, reheated, and recycled. As the coal is conveyed from the cyclone to the gasifier, it is fluidized by gas recycled from the methanator.

The coal enters the gasifier through injector nozzles near the throat separating Stage 1 and Stage 2. Steam is introduced through a separate annulus in the injector. The two streams combine at the top and join the hot synthesis gas rising from Stage 1. A mixing temperature of about 2,200°F is attained rapidly and the coal is converted to methane, additional synthesis gas, and char. The raw gas and char rise through Stage 2, leave the gasifier at about 1,700°F, and are quenched to 800°F by atomized water prior to separation in a char cyclone. The raw gas (containing methane, carbon monoxide, carbon dioxide, hydrogen, water, and hydrogen sulfide) passes through a scrubber for additional cooling and cleaning. The clean gas, along with the desired amount of moisture, is sent to a carbon monoxide shift converter to establish the proper ratio of carbon monoxide and hydrogen required in the methanation process. Gas from the shift converter is purified to remove H_2S and CO_2 and then methanated to produce pipeline gas.

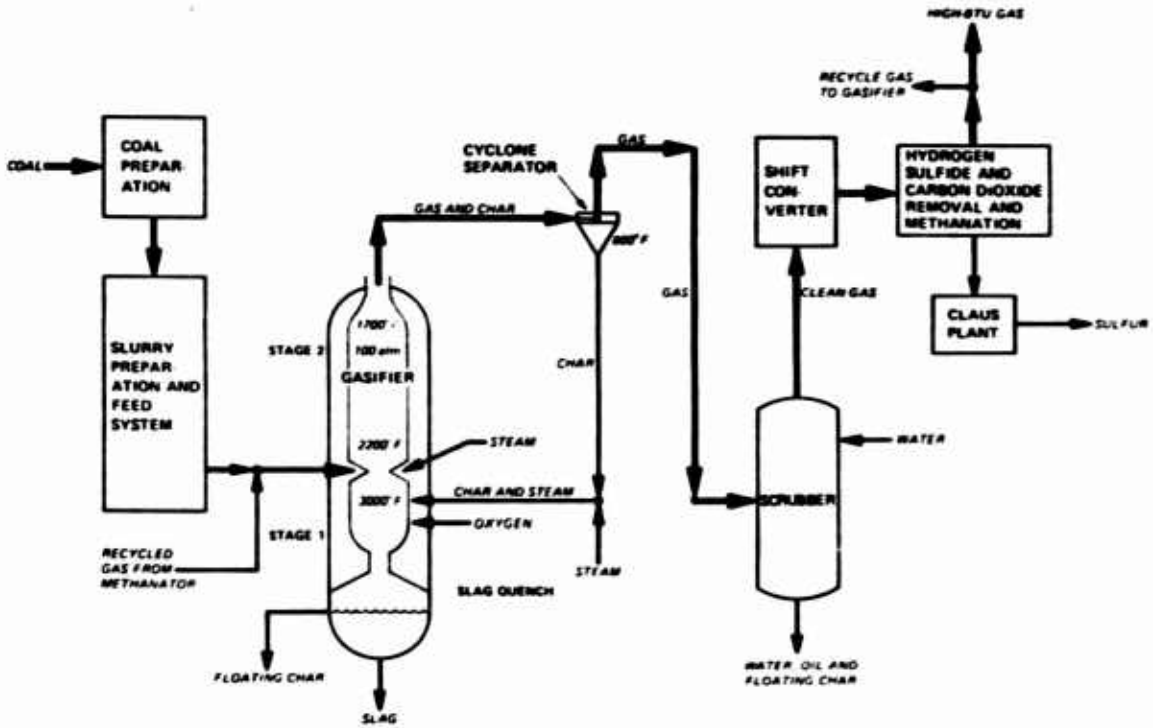

Figure D5. BIGAS Process

COAL GASIFICATION

SYNTHANE PROCESS

High-Btu Gas

BACKGROUND

Sponsor:	ERDA
Developer:	Pittsburgh Energy Research Center
Contractor:	Rust Engineering/Lummus Corp. Designed, Engineered, and Operated by C-E Lummus. Field Construction by Rust Engineering
Contract Value:	$9.6 million
Status:	75 tons/day pilot plant in operation. Located in Bruceton, Pennsylvania.
Compatible Coal Type:	Bituminous, Subbituminous, and Lignite

CONCEPTUAL DESIGN

Plant producing 250 MSCFD high-Btu gas

Coal Preparation

Coal Type: Bituminous, Pittsburgh Seam

Coal Analyses:

Proximate, wt %		Ultimate (MAF), wt %	
Fixed Carbon	32.3-38.7	Carbon	81.9
Volatile Matter	49.2-59.4	Hydrogen	5.8
Ash	7.4	Nitrogen	1.7
Moisture	2.5	Sulfur	1.8
		Oxygen	8.9

Heating Value, Btu/lb:	13700 (MAF) 12690 (As Received)
Pretreatment:	Coal is dried to 1.5 to 2 percent moisture and ground to 70 percent less than 200 mesh
Feed System:	Lock hopper

Gasification Reactor Description and Operating Conditions

Type:	Fluidized bed
Temperature:	Top 800°F Bottom 1700°F
Pressure:	100 psia

Input to Gasifier Reactor:

	lb/hr
Coal	1,187,500 (2.5% moisture)
Steam	1,169,700
Oxygen	304,000

Output from Gasifier Reactor

Raw Dry Gas	lb/hr	Vol %
CO	320,000	16.7
H_2	38,200	28.0
CO_2	871,000	29.0
CH_4	268,000	24.6
H_2S	12,200	0.5
COS	-------	----
N_2	16,000	0.8
Higher Hydrocarbons	15,000	0.3

By-Products	lb/hr
Char	362,200
Tar and Oil	43,200
Phenol	-------
NH_3	13,200
Hydrocarbon Liquids	7,400

Analysis of Net Dry Product Gas, vol %

CH_4	90.5
H_2	3.6
N_2	2.1
CO_2	3.7
CO	0.1
H_2S+SO_2	-----

Heating Value: 927 Btu/SCF

Pressure: 100 psia

Analysis of Char, wt % Dry

Carbon	71.4
Hydrogen	0.9
Nitrogen	0.5
Sulfur	1.5
Oxygen	1.8
Ash	23.9

Heating Value: 11,000 Btu/lb

Other Information

Net process water consumption: 1.0 MGD

Type of acid gas removal: Hot carbonate (Benfield)

Type of sulfur recovery: Stretford

Thermal efficiency: 59.3-66.0%

Process Description

A schematic of the Synthane process is provided in Figure D6. Crushed, dried, and pressurized coal is fed to the fluidized-bed pretreater (in case of caking coals) through a lock-hopper system. It is pretreated with steam and oxygen at 800°F where it is partially devolatized and its caking tendency destroyed.

The pretreated coal overflows from the pretreater into the two-zone gasifier, which consists of a dense fluid bed at an expanded top section and a dilute fluid bed at a contracted bottom section. By contacting the coal with hot gas coming from the dilute fluid bed, devolatization and hydrogasification take place at 1100 to 1470°F and 1000 psia. The devolatized coal from the dense fluid bed is gasified with steam and oxygen in the dilute fluid bed at 1750 to 1800°F to produce synthesis gas for the dense fluid bed. Steam and oxygen enter the gasifier just below the fluidizing gas distributor. Unreacted char flows downward into a bed fluidized with steam and water sprays, and is removed by pressurized lock hoppers. This char can be used to produce process steam.

The product gas, containing methane, hydrogen, carbon monoxide, carbon dioxide, ethane, and impurities, is passed through an oil venturi scrubber and a water scrubber to remove carry-over ash, char, and tars. The cleaned gas goes to a shift converter, where the ratio of H_2 to CO is adjusted to a value of 3:1. Gas from the shift converter is purified to remove CO_2 and H_2S and then methanated and dehydrated to produce pipeline gas. Two alternative methanation systems are being investigated: the hot gas recycle system and the tube wall reactor system.

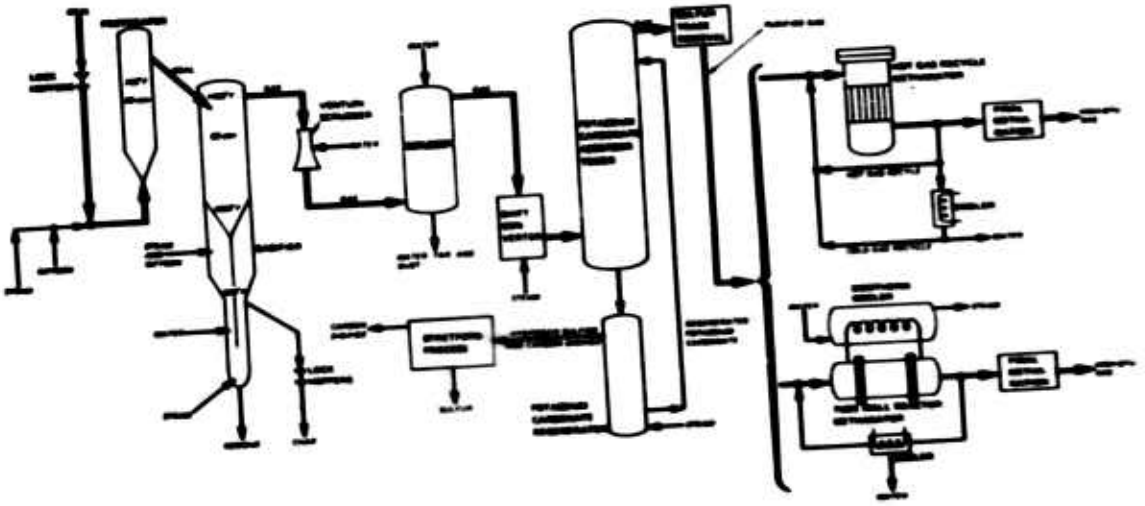

Figure D6. SYNTHANE Process

COAL GASIFICATION

HYDRANE PROCESS

High-Btu Gas

BACKGROUND

Sponsor:	ERDA
Developer:	Pittsburgh Energy Research Center
Status:	26 tons/day process development unit is being designed and construction is planned at Morgantown, West Virginia

---

CONCEPTUAL DESIGN No Data Available

Process Description

The Hydrane flow sheet is shown in Figure D7. Crushed raw coal is fed to a two-zone hydrogenation reactor operated at 1000 psig and 1650°F. In the top zone, the coal falls freely as a dilute cloud of particles through a hydrogen-rich gas containing some methane from the lower zone. About 20 percent of the carbon in the raw coal is converted to methane, causing the coal particles to lose their volatile matter and agglomerating characteristics. The coal is now essentially a char. This char falls into the lower zone where hydrogen feed gas maintains the particles in a fluidized state and also reacts with about 34 percent more of the carbon to make methane. The product gas exits from the center of the reactor and is cleaned of entrained solids and some unwanted gases. After cleanup, methanation of the small amount (2 to 5 percent) of residual carbon monoxide gives a pipeline quality, high-Btu, substitute natural gas. Char from the lower zone of the hydrogasifier is reacted with steam and oxygen to make the needed hydrogen.

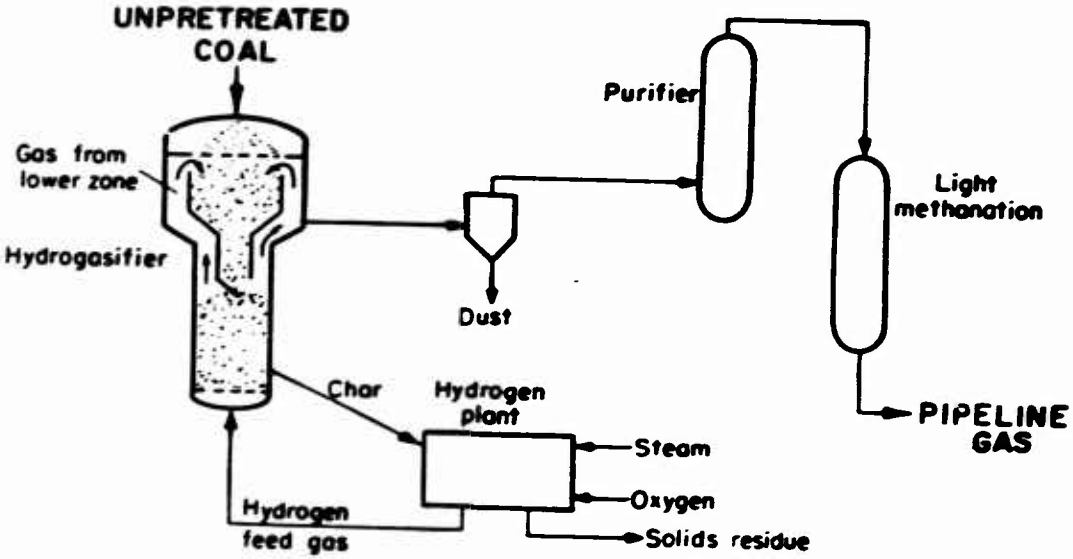

Figure D7. HYDRANE Process

COAL GASIFICATION

AGGLOMERATING BURNER PROCESS

High-Btu Gas

BACKGROUND

Sponsor:	ERDA and the American Gas Association
Developer:	Battelle Memorial Institute
Contractor:	Pilot Plant Installation and Operation by Battelle. Engineering, Design, and Construction by Chemical Construction Corporation (Chemico)
Contract Value:	ERDA - $7.2 million Others - $1.6 million
Status:	25 tons/day pilot plant located at West Jefferson, Ohio. Gas purification, shift conversion, and methanation of the product gas are not part of the present program.

CONCEPTUAL DESIGN No Data Available

Process Description

The flowsheet for the Agglomerating Burner process is shown in Figure D8. Coal is separated into two sizes (1-100) mesh for use in burner and -8+100 mesh for use in gasifier) and is dried. Caking coal is fed to a fluidized-bed pretreater where it is mixed with gas and air at atmospheric pressure at 750°F. Treated coal is cooled, fed to the steam fluidized-bed gasifier, then burned with air in a fluidized-bed burner, in a manner allowing agglomeration of the ash at a temperature approaching the ash fusion point (2100°F). The hot flue gases produced in the burner are free of fly ash and can be expanded in a gas turbine for energy recovery.

Hot ash agglomerates are transferred continuously from the burner to the gasifier by means of a steam lift. Superheated steam enters the gasifier below the distributor plate. Coal is fed through the lock hoppers by inert gas and is contacted with hot ash agglomerates (200°F) from the burner. The sensible heat is utilized from the gasification reaction. Raw gas from the gasifier is sent to a cleanup section. The unreacted char is transferred together with cool-ash agglomerates (1500°F) to the burner where the char is burned with air and ash agglomerates are heated to 2000°F. Ash equivalent to the ash content of the coal fed to the burner is removed from the system continuously to maintain a constant quantity of ash agglomerates in the cycle.

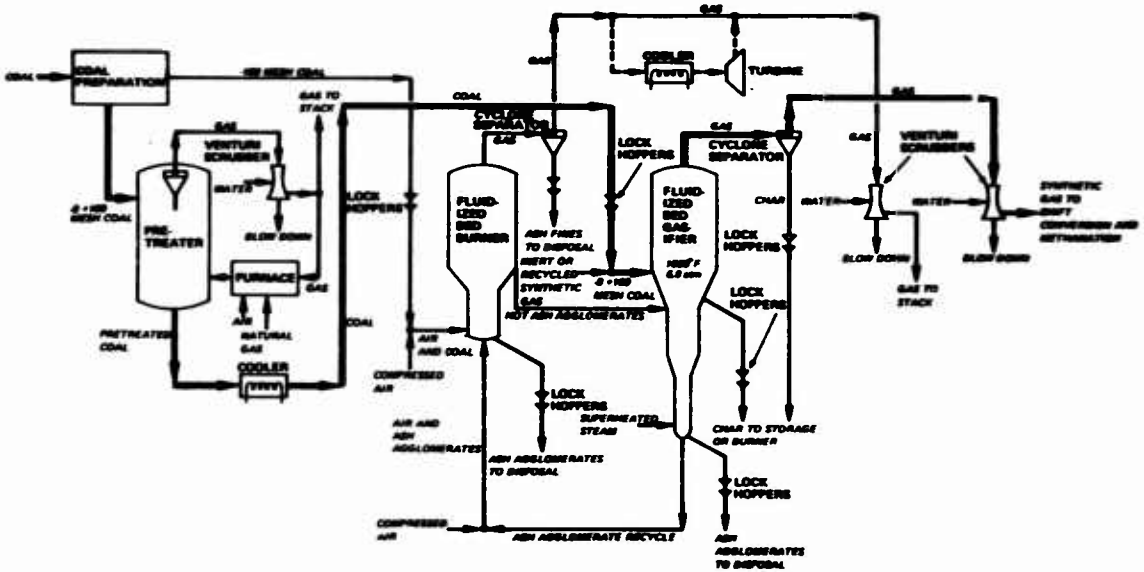

Figure D8. Agglomerating Burner Process

COAL GASIFICATION

KELLOGG MOLTEN SALT PROCESS

High-Btu Gas

BACKGROUND

Sponsor:	ERDA (1964-1967)
Developer:	M. W. Kellogg Company
Contractor:	M. W. Kellogg Company
Status:	OCR (now ERDA) funded a bench-scale program from 1964-1967. Major difficulties were experienced with materials of construction. OCR ceased sponsorship for this reason, budgetary restrictions, and assignment of higher priorities to other coal gasification processes. M. W. Kellogg has carried additional development since 1967, but no support has yet been obtained for construction of a large-scale pilot plant.

CONCEPTUAL DESIGN

No Data Available

Process Description

The block diagram of the single-vessel coal gasification process is shown in Figure D9. Coal is crushed to pass through 12 mesh and pressurized in lock hoppers. It is then fed to the gasifier by a stream of preheated oxygen and steam along with recycle sodium carbonate recovered from the ash rejection system. The coal-steam reaction conditions are 1700°F and 1200 psi. The coal-steam reaction is catalyzed by the molten salt contained in the reactor so that gas free of tar, with an appreciable methane content is produced. The heat required for the coal-steam reaction is provided by oxidation of a portion of the coal with oxygen in the reactor. A bleed stream of molten salt containing ash in suspension is withdrawn from the bottom of the gasifier and is contacted with water to dissolve the sodium carbonate. Ash is separated by filtration and the carbonate solution is treated to precipitate bicarbonate. The bicarbonate is filtered out and heated to restore the carbonate salt which is then recycled to the gasifier.

Raw gas leaving the gasifier passes through a heat recovery section and any entrained salt is removed. It further passes through the shift conversion unit, where the H_2 to CO ratio is properly adjusted. Effluent gas from shift conversion is purified, methanated, and dehydrated to produce pipeline quality gas.

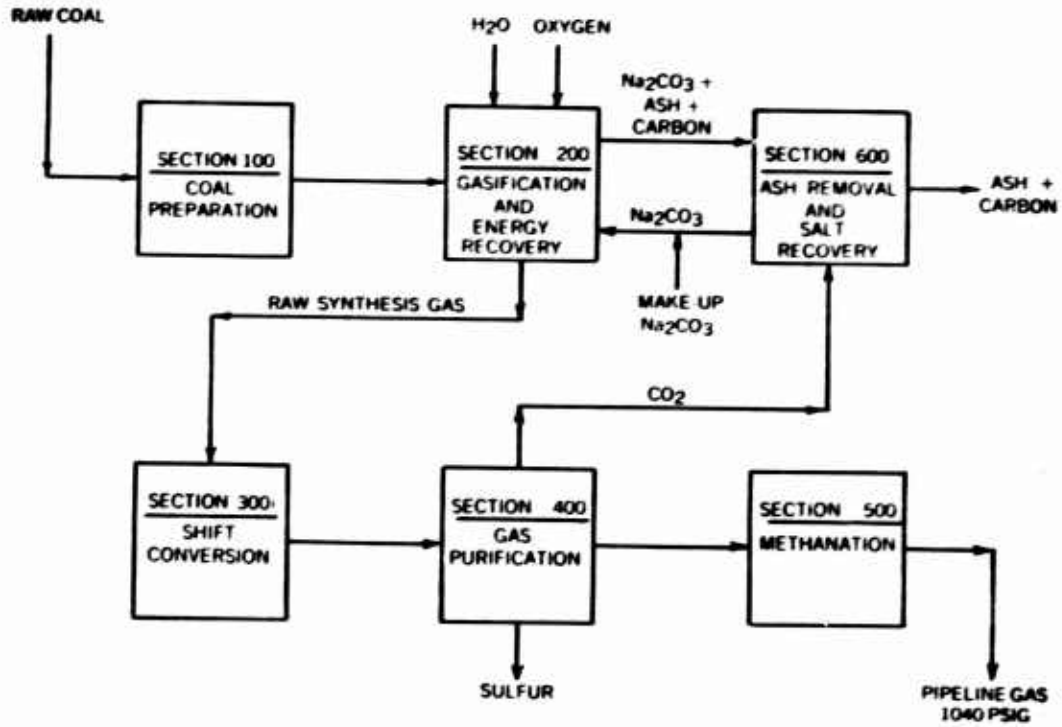

Figure D9. M.W. Kellogg's Molten Salt Process

APPENDIX E

PYROLYSIS AND HYDROCARBONIZATION LIQUEFACTION PROCESSES

Descriptions of the major pyrolysis and hydrocarbonization processes follow.

COAL LIQUEFACTION

CHAR OIL ENERGY DEVELOPMENT (COED) PROCESS

BACKGROUND

Sponsor:	ERDA
Developer:	FMC Corporation
Contractor:	FMC Corporation
Contract Value:	$21 Million
Status:	36 tons/day pilot plant operation completed. Located in Princeton, New Jersey.
Compatible Coal Types:	Bituminous, Subbituminous, and Lignite

---

CONCEPTUAL DESIGN

Plant producing 328,800 lb/hr of Syncrude

Coal Preparation Operation

Coal Type: Bituminous, Illinois #6

Coal Analyses:

Proximate, %		Ultimate (MAF), %	
Fixed Carbon	44.0	Carbon	75.5
Volatiles	32.0	Hydrogen	6.0
Ash	10.0	Nitrogen	1.2
Moisture	14.0	Sulfur	4.6
		Oxygen	13.2

Heating Value, Btu/lb: 11300 (MAF)
10170 (As Received)
12420 (5.9% Moisture)

Preparation: Coal is dried to 5.9 percent moisture and ground to less than 16 mesh (minimum fines)

Feed System: Mechanical feeders to a mixing tee from which it is blown into dryer and first stage pyrolysis

Liquefaction Description and Operating Conditions

Type of Process:	Fluidized-bed pyrolysis	
Number of Reactors:	Two sets of four reactors	
Dimensions:	60'-70' in diameter	
Reactor Temperature:	Stage 1	550-600°F
	Stage 2	850°F
	Stage 3	1050°F
	Stage 4	1550°F
Reactor Pressure:	8 psig	
Cooling Mechanism:	Cooling tower, 3 MGD	

Input to Liquefaction Reactor:

Coal	2,126,000 lb/hr (5.9% moisture)
Steam	507,200 lb/hr
Natural Gas	48,600 lb/hr*
Combustion Air	732,000 lb/hr
Oxygen	313,000 lb/hr
Transport gas	94,100 lb/hr

Output from Liquefaction Reactor:

Raw Product:	2,174,500 lb/hr
Char	1,042,600 lb/hr
Gas	732,000 lb/hr
Water	187,000 lb/hr

*Does not include 288,500 lb/hr gas recycled through char cooler

Hydrotreating Process:

Type of process: Three sections, downflow

Input to Hydrogen Production:

Product Oil:	371,800 lb/hr
Hydrogen Makeup:	56,800 lb/hr
Stripping Gas:	205,600 lb/hr
Fuel Gas:	167,000,000 Btu/Hr

Output from Hydrogen Production:

Liquid Products:	328,800 lb/hr
Sour Gas:	58,000 lb/hr
Stripping Gas:	214,000 lb/hr
Sour Water:	33,200 lb/hr
Flue Gas	Not Specified

Hydrogen Production

Type of Process: Steam reforming of natural gas

Input to Hydrogen Production

Mixture of clean product gas and hydrotreater off-gas	108,000 lb/hr
Net Water Consumption	86,000 lb/hr
Fuel Gas	46,000 lb/hr
Air	----------

Output from Hydrogen Production:

Hydrogen	56,800 lb/hr
Steam	----------
Flue Gas	----------
Water	----------

Overall Output from COED Process

Liquid Product	328,800 lb/hr
Char	1,042,600 lb/hr
Gas	732,000 lb/hr
Water	187,000 lb/hr
Sulfur	42,500 lb/hr

Analysis of Liquid Product, (wt %)

Carbon	87.1%
Hydrogen	10.9%
Nitrogen	0.3%
Oxygen	1.6%
Sulfur	0.7%
Ash	0.1%
Moisture	0.1%

Heating Value (Approximate): 19,000 Btu/lb

Analysis of Char, (wt % Dry)

Carbon	73.8
Hydrogen	0.8
Nitrogen	1.0
Sulfur	3.2
Oxygen	0.0
Ash	21.2

Heating Value: 11,700 Btu/lb

Other Information:

Net Process Water Consumption:	Not specified
Type of Acid Gas Removal:	Primary - (H_2S+CO_2) hot carbonate Secondary - (CO_2 only) not specified
Type of Sulfur Recovery:	Claus
Thermal Efficiency:	57.6-72.2%

Process Description

The COED (Char Oil Energy Development) process reacts coal in multistage fluidized beds producing gas, oil, and char(see Figure E1). Initially the coal is crushed and dried. Pyrolysis then occurs in a four-stage reactor. Each successive stage operates at a higher temperature. Each temperature is slightly lower than the temperature at which the coal type agglomerates. The fuel to heat the reactors originates in the fourth stage of the reactor where char is burned with oxygen in the presence of steam. The heated gases leave the fourth stage and flow countercurrently to the char.

After acting as the fluidizing medium for the second and third pyrolysis stages, the hot gases are sent to the product recovery system. Gas and oil are recovered from vapors leaving the second stage. A cyclone is utilized to remove fines from the vapors. The vapors are then quenched with water in a venturi scrubber, condensing the oil. The gases and oils then are separated in a decanter.

After desulfurization, part of the product gas is converted to hydrogen and recycled to the process. The remainder is either sold as fuel gas or converted to pipeline gas or hydrogen.

The decanted oil is dehydrated and filtered in a rotary pressure precoat filter. The oil is pressurized and hydrotreated in a fixed-bed catalytic reactor. The hydrotreater removes nitrogen, sulfur, and oxygen by reacting with hydrogen to produce ammonia, hydrogen sulfide, and water.

Sulfur is removed from the char in a shaft kiln. Hydrogen added to the kiln reacts with the char to produce hydrogen sulfide. The hydrogen sulfide is then adsorbed by an acceptor such as calcined limestone or dolomite. The acceptor, which can be regenerated, is separated from the char in a continuous fluidized separator. The product char can be reacted in a gasifier with steam and oxygen to make low-Btu gas.

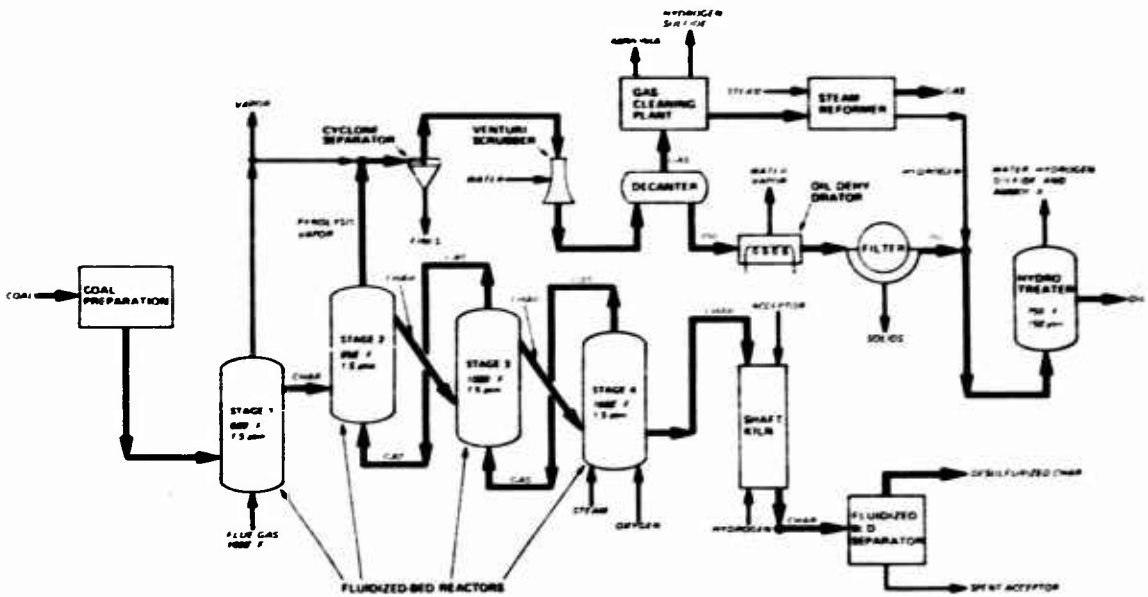

Figure E1. COED Process Flow Diagram

COAL LIQUEFACTION

COALCON PROCESS

GENERAL

Sponsor: ERDA

Developer: Union Carbide

Contractor: Consortium of Companies

Principal Members	Company
Metals----------	Reynolds Metals Co.
Chemicals----------	Du Pont Union Carbide Corp.
Architectural and Engineering Services------	Chemical Construction Corporation
Petroleum----------	Ashland Oil Co. Mobil Oil Co. Sun Oil Co. Atlantic Richfield Co.
Coal----------	Youghiogheny & Ohio Coal Company
Electric----------	Electric Power Research Inst.
Gas----------	Consolidated Gas Co.
Heavy Industry----------	Martin Marietta

Contract Value: ERDA - $130 million
Others - $107 million

Status: 2600 tons/day demonstration plant is to be located in New Athens, Illinois. Contract awarded to COALCON for the phased design, construction, and operation. Scheduled operational date is Fiscal Year 1980.

CONCEPTUAL DESIGN

Coal Preparation Operation

Coal Type: Bituminous, Lignite, Subbitumious

Coal Analyses (Pittsburg No. 8 Coal):

Proximate, %		Ultimate (MAF), %	
Fixed Carbon	54.7	Carbon	82.4
Volatiles	45.3	Hydrogen	5.5
Ash	9.1	Nitrogen	1.2
Moisture	3.7	Oxygen	113.2
		Sulfur	3.6

Heating Value, Btu/lb: 14,900 (MAF)
13,200 (As Received)
13,600 (Dry)

Preparation: 80% 100 mesh, 1 percent moisture

Feed System: dry, lock hopper

Liquefaction Description and Operating Conditions:

Type of process: Fluidized-bed hydrogenation (hydro-carbonization)

No other information is currently available on this process

Process Description

The COALCON process shown in Figure E2 is based on a dry, fluid-bed hydrogenation technique known as hydrocarbonization. The feed coal is crushed, sized to 80% through 100 mesh, and dried to about 1% moisture. Prepared coal is then fed to the hydrocarbonization reactor through a lock hopper system where coal is heated to 1000°F in the presence of hydrogen at approximately 500 psi. Proper distribution of hydrogen to the reactor gives better fluidization and hence higher coal reactivity.

The hydrocarbon vapor product leaves the reactor through a cyclone separator. The vapor is then cooled and scrubbed of final dust; the heavier hydrocarbons condense to form the liquid hydrocarbon products. The condensed product is further fractionated to separate lighter and heavier hydrocarbons. The uncondensed gaseous products are separated and treated to produce a high-Btu pipeline quality gas. The essential steps include acid gas removal, hydrogen purification, and methanation.

The char from the hydrocarbonization reactor is removed through a lock hopper system, cooled, and ground to the required size for use in gasifiers. Hydrogen produced in the gasifier is used in the process.

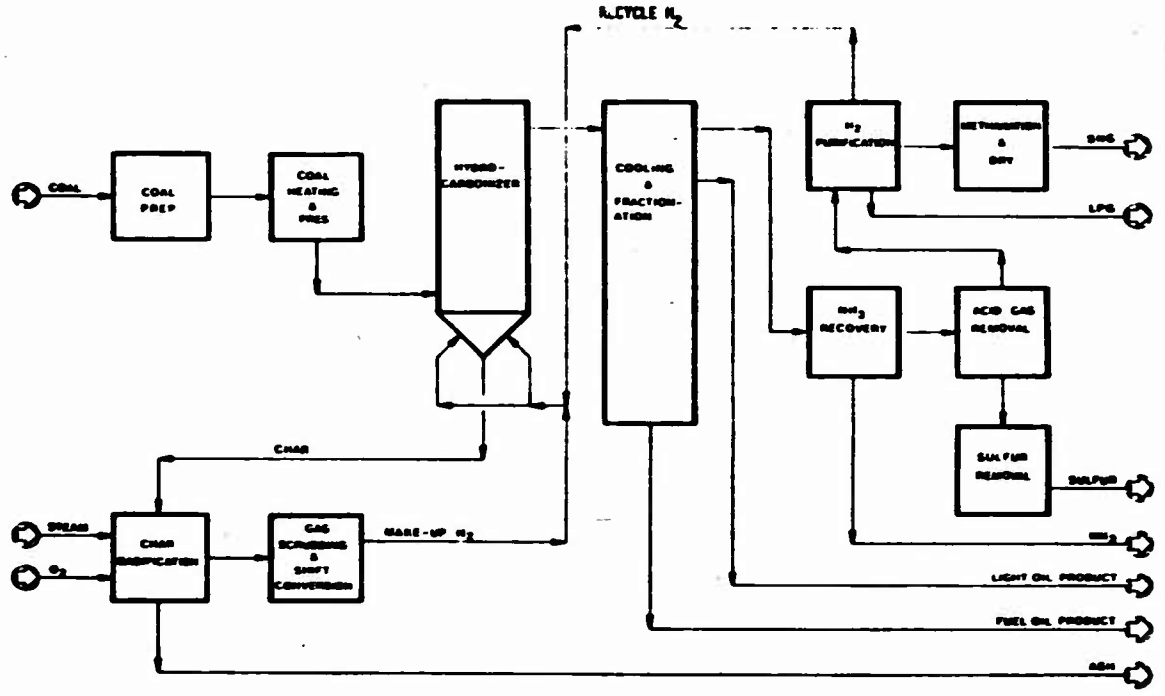

Figure E2. Coalcon Hydrocarbonization Process

COAL LIQUEFACTION

FISCHER-TROPSCH PROCESS

BACKGROUND

Developer:	M. W. Kellogg Co. and Arge-Arbeit Germeinschaft Lurgi and Ruhrchemie
Status:	The Sasol plant (6,600 tons of coal/day to the gasifier) has been in operation in South Africa since 1957.
Compatible Coal Type:	Depends upon gasifier type

CONCEPTUAL DESIGN

No data available

Process Description

The schematic for a Fischer-Tropsch based process is shown in Figure E3. This process basically converts carbon monoxide and hydrogen to liquid hydrocarbons. The two chemical equations which generalize the formation of hydrocarbons are:

$$nCO + 2nH_2 = (CH_2)_n + nH_2O$$

$$2nCO + nH_2 = (CH_2)_n + nCO_2$$

Noncaking coal is crushed to 3/8 to 1-1/2 in., dried and reacted with oxygen and steam in a Lurgi gasifier at 350-450 psi, generating a gas composed mostly of carbon monoxide and hydrogen. Gas is quenched to remove tar and oil. Then, CO_2 and H_2S are removed to produce synthesis gas.

A part of the synthesis gas is passed through a fixed catalyst bed contained in vertical tubes (Arge Synthesis). Released heat is absorbed by boiling water outside the tubes. Feed gas has an H_2/CO ratio of about 2. Operating conditions are 430°-490° and 360 psig. Recycle gas to fresh-feed ratio is about 2.4:1. The products of the fixed bed synthesis are straight-chain, high-boiling hydrocarbons, with some medium-boiling oils, diesel oil, LP-gas, and oxygenated compounds.

The portion of the synthesis gas which did not go to the Arge synthesis goes to a fluid-bed reactor (Kellogg synthesis). A portion of the tail gas from the Kellogg fluid bed is reformed with steam to increase the H_2/CO ratio to about 3, and is mixed with the fresh synthesis gas. In the fluid bed the catalyst is circulated along with the synthesis gas. Gas and catalyst leaving the reactor are separated in cyclones and the catalyst is recycled. Operating conditions are 600°-625°F and 330 psig. Recycle gas to fresh feed ratio is 2:1. Products from the fluid-bed synthesis are mainly low-boiling hydrocarbons (C_1-C_4) and gasoline, with little medium and high-boiling material. Substantial amounts of oxygenated products and aromatics are made. A portion of the fixed-bed and fluid-bed tail gas is removed and used for utility gas.

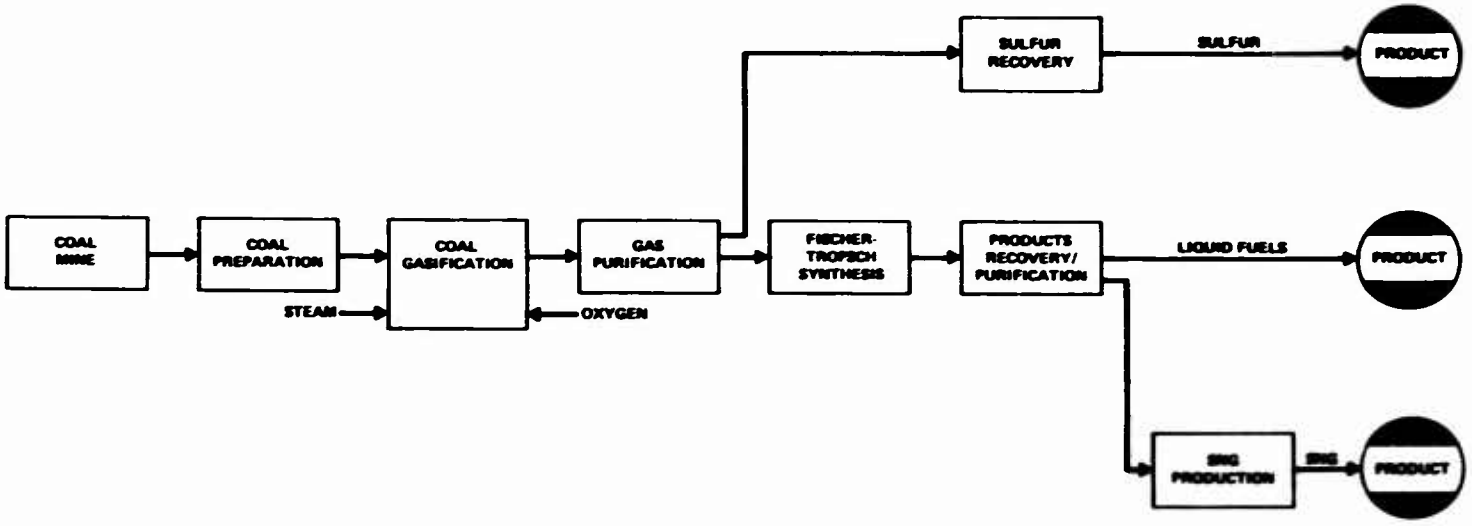

Figure E3. Fischer- ropsch Process

APPENDIX F

HYDROGENATION LIQUEFACTION PROCESSES

Descriptions of the major hydrogenation processes follow.

Preparation:	Coal is dried to 2.7% moisture and ground to 1/8"
Feed System:	Conveyor to solvent slurry tank

Liquefaction Reactor Description and Operating Conditions

Type:	Non-catalytic hydrogenation
Number of Reactors:	----------
Pressure:	1,000 psig
Temperature:	840°F

Cooling Mechanism: Not specified, cooling towers used

Input to Liquefaction Reactor:

Coal	833,300 lb/hr (2.7% moisture)
Steam (Water)	110,500 lb/hr
Recycle Slurry	1,666,700 lb/hr
Synthesis Gas	740,300 lb/hr
Combustion Air:	811,900 lb/hr

Ouput from Liquefaction Reactor:

Raw Product (includes Char)	3,689,700 lb/hr
Gas	873,200 lb/hr

Hydrotreating:

Input to Hydrotreating:

Product Oil	405,400 lb/hr
Hydrogen Makeup	8,200 lb/hr
Fuel Gas	9,500 lb/hr
Combustion Air	125,700 lb/hr
Water or Steam	29,600 lb/hr

Output from Hydrotreating:

Liquid Products (not including 10,100 lb/hr to plant fuel)	385,750 lb/hr
Sour Gas	15,900 lb/hr
Sour Water	41,400 lb/hr
Flue Gas	135,156 lb/hr

COAL LIQUEFACTION

SOLVENT REFINED COAL (SRC) PROCESS

BACKGROUND

Sponsor:	1. ERDA 2. EPRI, Southern Services, Inc. ERDA
Developer:	Pittsburgh and Midway Coal Mining Company (PAMCO)
Contractor:	1. PAMCO 2. Catalytic, Inc.
Contract Value:	1. $42 million 2. Not specified
Status:	2 Pilot Plants in Operation 1. Tacoma, Washington - 50 tons/day 2. Wilsonville, Alabama - 6 tons/day
Compatible Coal Type:	Bituminous, Brown Coal

CONCEPTUAL DESIGN

Plant produces approximately 16,667 barrels/day of 0.5% sulfur oil and 8,333 barrels/day of 0.2% sulfur oil.

Coal Preparation Operation

Coal Type: Bituminous, Illinois #6

Coal Analyses:

Proximate Analysis %		Ultimate Analysis (MAF) %	
Fixed Carbon	35.58	Carbon	78.46
Volatiles	47.82	Hydrogen	5.20
Ash	6.59	Nitrogen	1.19
Moisture	10.00	Sulfur	3.75
		Oxygen	11.40

Heating Value, Btu/lb: 11320 (MAF)
10570 (As Received)
12280 (2.7% Moisture)

Hydrogen Production

Type of Process: CO Shift

Input to Hydrogen Production:

Char, Ash, and Heavy Liquid	255,100 lb/hr
Gasifier Steam	77,500 lb/hr
Oxygen	163,700 lb/hr
Other Steam and Water	563,600 lb/hr
Fuel Gas	7,100 lb/hr
Air	93,800 lb/hr

Output from Hydrogen Production:

Hydrogen	8,200 lb/hr
Synthesis Gas	303,200 lb/hr
Ash (contains 59,400 lb/hr of slag)	108,300 lb/hr
Acid Gas	111,600 lb/hr
Steam	331,500 lb/hr
Flue Gas/CO_2	168,300 lb/hr
Water	129,700 lb/hr

Overall Products from SRC Process

Heavy Liquid

Amount	242,900 lb/hr
Sulfur Content	0.59%
Gravity	-9.7°API
Heating Value	16,660 Btu/lb

Hydrotreated Liquid

Amount	120,200 lb/hr
Sulfur Content	0.2%
Boiling Range	400-870°F
Gravity	13.9°API
Heating Value	18,330 Btu/lb

Light Oils

Amount	22,700 lb/hr
Sulfur	1 ppm
Boiling Range	C4-400°F
Gravity	52°API
Nitrogen	26,400 lb/hr

Sulfur 26,400 lb/hr

Other Information

Net Process Water Consumption:	----------
Type of Acid Gas Removed:	Primary - mono-ethanol amine/caustic Secondary - hot carbonate
Type of Sulfur Recovery:	Claus
Thermal Efficiency:	60.3-70%

Process Description

The Solvent Refined Coal (SRC) process (see Figure F1) converts high-sulfur, high-ash coal to ashless, low-sulfur liquid fuel. Pulverized coal is mixed with a coal-based solvent in a slurry tank. Hydrogen, produced elsewhere in the process, is combined with the slurry. The mixture is then pumped through a preheater and into a dissolver where about 90 percent of the dry, ash-free coal is dissolved. Simultaneously the coal is depolymerized and hydrogenated. The solvent is hydrocracked, forming lower molecular weight hydrocarbons such as light oil and methane. The sulfur is removed as hydrogen sulfide.

After leaving the dissolver, the gases are separated from the slurry of undissolved solids and coal oil solution. Raw gas goes to a hydrogen recovery and gas desulfurization unit. The recovered hydrogen is recycled with the fresh coal feed slurry. Hydrocarbon gases are released and the hydrogen sulfide is converted to elemental sulfur.

Solids filtered from the slurry (containing unreacted carbon) are sent to a gasifier-converter where they are combined with additional coal, oxygen, and steam, and thereby converted to hydrogen for use in the process. The refined-coal is separated from the solvent in the solvent recovery unit. This refined coal has a solidification point of 350°F-400°F.

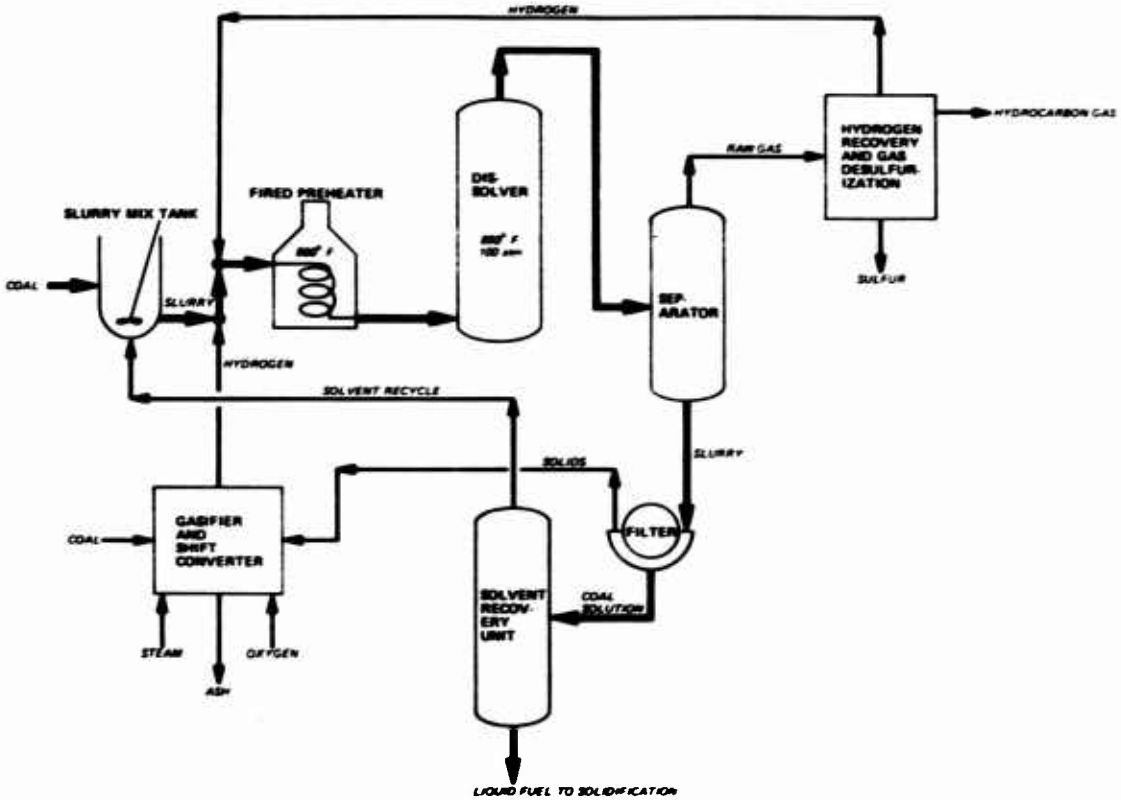

Figure F1. SRC Process Flow Diagram

COAL LIQUEFACTION

H-COAL PROCESS

BACKGROUND

Sponsors:	ERDA, State of Kentucky, Electric Power Research Institute, and Several Oil Companies
Developer:	Hydrocarbon Research, Inc.
Contractor:	Hydrocarbon Research, Inc.
Contract Value:	ERDA-$8.1 million Others-$2.7 million
Status:	A 3 ton/day bench plant is in operation at Trenton, New Jersey and a 600 ton/day plant is being designed for construction at Catlettsburg, Kentucky
Compatible Coal Types:	Lignite, Subbitumious, Bituminous

CONCEPTUAL DESIGN

Plant produces 91,240 barrels of crude oil per day

Coal Preparation Operation

Coal Type: Bituminous, Illinois, #6

Coal Analyses:

Proximate, %		Ultimate (MAF), wt %	
Fixed Carbon	37.8	Carbon	78.5
Volatiles	43.3	Hydrogen	6.0
Ash	8.9	Nitrogen	1.1
Moisture	10.0	Sulfur	5.5
		Oxygen	8.9

Heating Value, Btu/lb: 11560 (MAF)
10530 (As Received)

Preparation: Coal is dried until essentially all moisture is removed and then crushed to less than 40 mesh

Feed System: Coal is mixed with recycle oil to form a slurry

Liquefaction Reactor Descriptions and Operating Conditions

Type:	Catalytic hydrogenation, ebullating bed
Number of Reactors:	----------
Dimensions:	----------
Reactor Temperature:	850°F
Reactor Pressure:	2000 psig
Cooling Mechanism:	Non-contact cooling water with cooling tower

Input to Liquefaction Reactor:

Coal	2,083,300 lb/hr (dry)
Recycle Slurry	4,166,700 lb/hr
Gas	65,800 lb/hr

Output from Liquefaction Reactor:

Raw Product	----------
Gas	----------

Hydrotreating Process: The H-Coal process does not require hydrotreating

Hydrogen Production

Type of Process: Steam-carbon reaction (gasification)

Input to Hydrogen Production:

Heavy Bottoms and Coal	653,300 lb/hr
Gasifier Steam (from waste heat boiler)	177,800 lb/hr
Oxygen	414,000 lb/hr
Other Steam and Water	1,528,300 lb/hr

Output from Hydrogen Production:

Hydrogen	92,000 lb/hr
Ash	222,300 lb/hr
Steam	1,104,800 lb/hr
Flue Gas/CO_2	(includes 19,800 lb/hr of H_2O vapor)
Water	554,800 lb/hr
Acid Gas	291,500 lb/hr

Overall Products from H-Coal Process

Synthetic Crude	1,201,300 lb/hr
By-Product Fuel Gas	100,800 lb/hr
High-Btu Char	0
Sulfur	107,900 lb/hr
Ammonia	17,100 lb/hr

Analysis of Synthetic Crude:

Gravity	25.2 °API
Hydrogen,	9.48%
Sulfur	0.19%
Nitrogen	0.68%
Heating Value	18,290 Btu/lb

Analysis of By-Product Fuel Gas:

Hydrogen Content (volume %)	56
Heating Value	24,000 Btu/lb (900 Btu/scf)

Other Information

Type of Acid Gas Removal:	Primary - alkanolamine Secondary - hot carbonate
Type of Sulfur Recovery:	Claus
Thermal Efficiency:	67.7-77.0%

Process Description

The H-coal process (see Figure F2) is a catalytic hydrogenation process that produces low-sulfur boiler fuels and syncrude from high-sulfur coal.

The coal is dried and crushed, mixed with recycle oil, and pumped to a pressure of 2,000 psig. Compressed hydrogen is added to the slurry. The mixture is preheated and charged continuously into an ebullating-bed catalytic reactor. The upward passage of the internally recycled reaction mix keeps the catalyst in a fluidized state. The temperature of the reactor is regulated by adjustment of the quantities of reactants entering the preheater.

The heavier components of the vapor leaving the top of the reactor are collected by cooling the gas. The hydrogen-rich gas that remains following adsorption of ammonia is pressurized and mixed with the input coal slurry. The liquid-solid product (unconverted coal, oil, and ash) is fed to a flash separator. An atmospheric distillation unit treats the material that boils off. The remaining bottoms product (heavy oil and solids) is further separated with a hydroclone (liquid-solid separator) and a vacuum still.

The gas and liquid products (hydrocarbon gas, hydrogen sulfide, ammonia, light distillate, heavy distillate, and residual fuel) may be further refined as desired.

The type of fuel produced in the H-coal process can be regulated by altering the operating conditions. For syncrude oil production, additional hydrogen is used, reducing the yield of residual oil. The solid-liquid separation can be accomplished by vacuum distillation, thus eliminating the liquid-solids separation phase unit. A clean fuel gas and low-sulfur residual fuel can be obtained by lowering the temperature and pressure in the catalytic reactor and limiting hydrogen consumption.

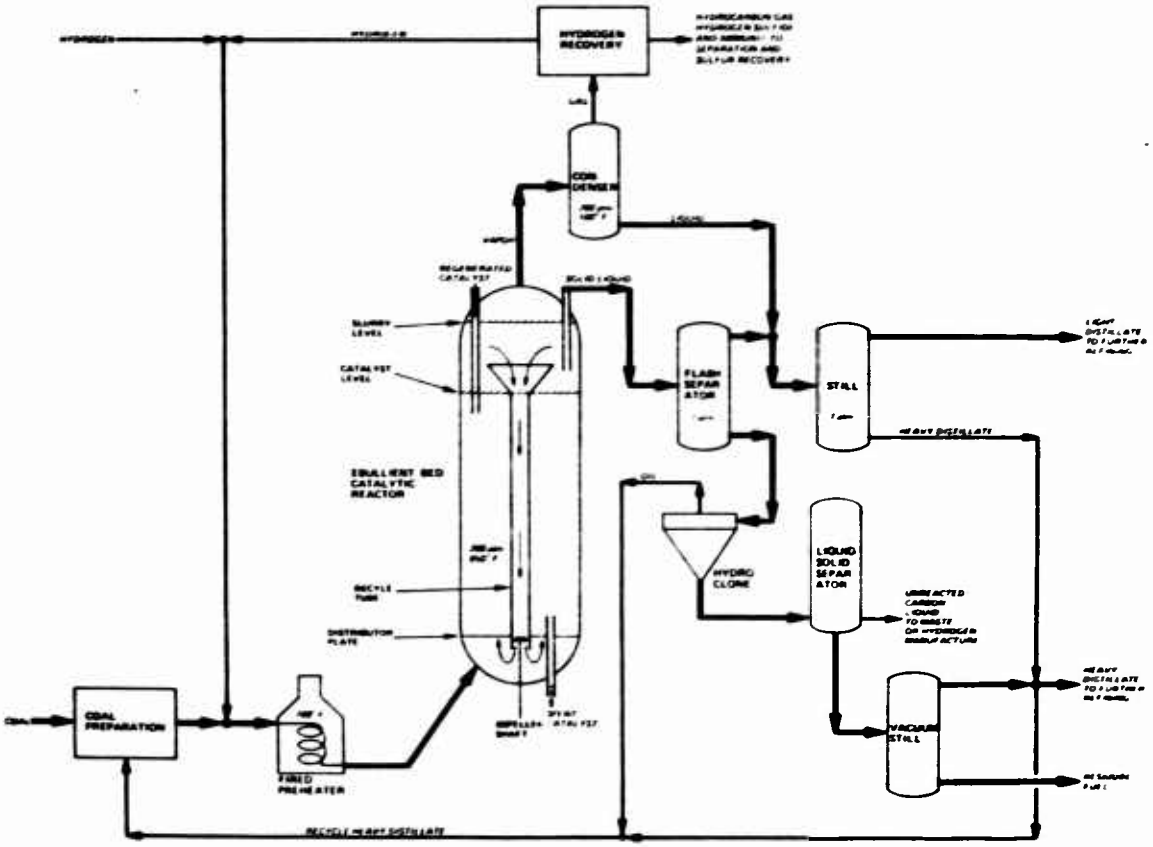

Figure F2. H - Coal Process Flow Diagram

COAL LIQUEFACTION

EXXON DONOR SOLVENT PROCESS

BACKGROUND

Sponsor:	ERDA
Developer:	Exxon Research & Engineering Company
Contractor:	Exxon
Contract Value:	Not Specified
Status:	One ton/day pilot plant in operation in Baytown, Texas. Planning for a 250 ton/day, 50,000 bbl/day pilot plant has begun.
Compatible Coal Type:	Lignite, Subbituminous, Bituminous

CONCEPTUAL DESIGN: 50,000 bbls/day of low-sulfur fuel oil

Coal Preparation and Storage:

Coal Type: Illinois #6, Bituminous

Coal Analyses (as received):

Proximate, wt %		Ultimate, wt %	
Moisture	16.0	Carbon	58.17
Ash	8.0	Hydrogen	4.22
Volatile Matter	35.0	Nitrogen	1.54
Fixed Carbon	41.0	Chlorine	0.18
Sulfur	3.50	Sulfur	3.50
Alkalies, Na_2O	0.15	Oxygen	7.89
		Ash	8.00
		Moisture	16.50

Heating Value, Btu/lb: 10700 (MAF)
9840 (As Received)

Pretreatment: Coal is dried and ground to 8 mesh

Feed System: Tubular pneumatic conveyor

Liquefaction Reactor Description and Operating Conditions

Type of Process:	Stirred tank, tubular plug flow, tubular with external and internal recirculation, ebullating catalytic bed.
Temperature:	370-480°C
Pressure:	300 psig to 2500 psig
Input:	1,340,000 - 1,540,000 lb/hr
Hydrotreating Process:	No information available
Hydrogen Production:	No information available
Overall Output:	Total of 50,000 barrels/day of Naphtha and Fuel Oil

Analysis, wt %

	Heavy Naphtha		200°C + Fuel Oil	
	Raw Liquid	Hydrotreated Liquid	Raw Liquid	Hydrotreated Liquid
Carbon	85.60	86.80	89.40	90.80
Hydrogen	10.90	12.90	7.70	8.60
Oxygen	2.82	0.23	1.83	0.32
Nitrogen	0.21	0.06	0.66	0.24
Sulfur	0.47	0.005	0.41	0.04
Heating Value, Btu/lb	18,307	19,295	17,103	18,091

Other Information

Type of Acid Gas Removal:	Monoethenolamine (MEA)
Turndown Flexibility:	50%

Process Description

The Exxon Donor Solvent Process (see Figure F3) converts high-sulfur, high-ash coal into naphtha and low-sulfur, low-ash fuel oil. The coal feed is dried, ground, and screened. The coal and recycled solvent are mixed in a slurry preparation vessel. The slurry is then fed through a preheater into a liquefaction reactor. The hydrogen treating gas is preheated either separately or in a mixture with the slurry. The products are gas, raw coal liquids, and a heavy bottoms stream composed of unreacted coal and mineral matter. Distillation separates the liquids, and the spent solvent is catalytically hydrogenated for recycle. Heavy bottoms from the distillation are processed to yield other liquids and hydrogen or fuel gas. Gases generated during liquefaction are used as fuel and for hydrogen manufacture.

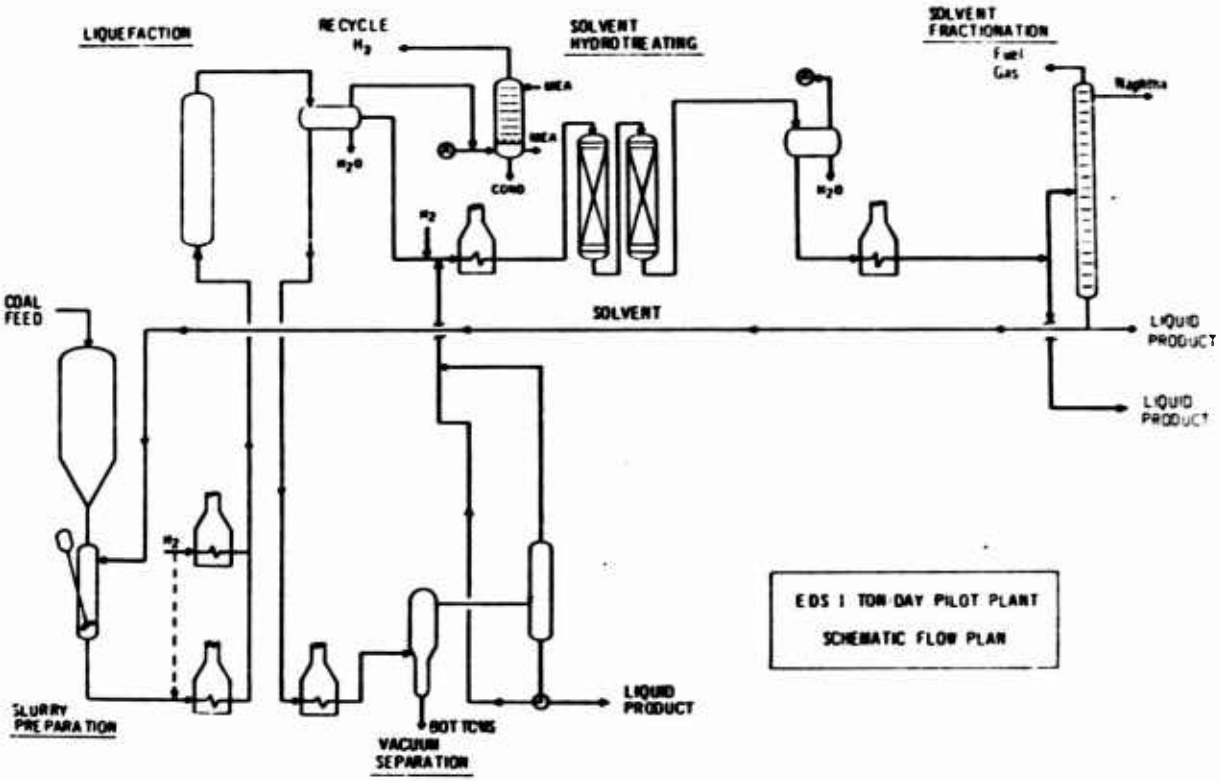

Figure F3. EDS Process Flow Diagram

COAL LIQUEFACTION

SYNTHOIL PROCESS

BACKGROUND

Sponsor:	ERDA
Developer:	Pittsburgh Energy Research. Center of ERDA
Contractor:	Foster Wheeler Energy Corp.
Contract Value:	ERDA - $6.9 Million Foster Wheeler-$1.1 Million
Status:	A 10 ton/day pilot plant is in operation at Pittsburgh Energy Research Center, Bruceton, Pennsylvania. A 7,000 ton/day plant is under preliminary design
Compatible Coal Type:	Lignite, Subbituminous, Bituminous

CONCEPTUAL DESIGN

Plant converts Wydoak coal to 50,000 barrels/day of oil

Coal Preparation Operation

Coal Type: Subbituminous, Wyodak

Coal Analysis:

	Ultimate, WT, %
Moisture	29.0
Ash	6.6
Carbon	47.0
Hydrogen	3.5
Nitrogen	0.5
Sulfur	0.7
Oxygen	12.7

Heating Value, Btu/lb: 8050 (MAF)
7420 (As Received)

Preparation: Coal is dried to 0.5 percent water and ground to 65 percent less than 200 mesh

Feed System: Screw fed

Liquefaction Reactor Description and Operating Conditions

Type: Catalytic Hydrogenation, Turbulent Bed

Number: 7

Dimensions: 2900 cu ft, 6.67' ID x 83"

Temperature: 860°F

Pressure: 4200 psig

Cooling Mechanism: Countercurrent heat exchange

Input to Liquefaction Reactor (including hydrogen production)

	lb/hr
Coal	1,704,800
Steam	147,000
Oil	1,594,200
Residue	16,000
Oxygen	302,960
Char	178,000

Output from Liquefaction Reactor

No information available

Hydrogen Production

Type of Process: Fluidized gasification

Input to Hydrogen Production:

Char (recycled)	89.0 tons/hr
Coal	184.2 tons/hr
Oxygen	151.48 tons/hr
Steam (450 psig and 900°F)	148,000 pounds/hr

Output from Hydrogen Production:

	Million SCFH
H_2	12.51
CO	0.22
CO_2	0.01

Overall Products from Synthoil Process

Ammonium sulfate	15,240 lbs/day
Sulfuric acid	11,333 lbs/day
Heavy Fuel Oil	50,000 barrels/day
Fuel Gas	840,800 SCFH
Ash	10,583 lbs/hr

Analysis of heavy fuel oil

Sulfur content	0.7%
Heating value	18,300 Btu/lb

Other Information

Raw water usage:	20.4 MGD
Type of acid gas removal:	Primary secondary hot carbonate
Thermal Efficiency:	----------

Process Description

In the Synthoil process (see Figure F4), a catalytic hydrogenation process, high-sulfur coal is converted to low-ash, low-sulfur fuel oil. The coal is crushed, ground, and dried. Recycled product oil is then combined with the coal, forming a slurry. The slurry is mixed with recycle hydrogen, preheated, and transported to the fixed-bed catalytic reactor. The hydrogen propels the slurry through the reactor so violently that plugging by the coal mineral matter is prevented. The turbulence of the slurry promotes mass and heat transfer, encouraging hydrodesulfurization and liquefaction. The catalyst consists of cobalt molybdate on silica-promoted alumina. The resulting mixture is cooled and the liquid and unreacted solids are separated from the gases.

The liquids and residue are then centrifuged. A portion of the liquid is recycled and combined with the feed coal. The remainder, the product oil, is low in sulfur. The char is pyrolyzed, yielding additional product oil and ash. The ash, containing some carbonaceous material, is sent to the gasifier and the resulting gas is sent to the shift converter.

The gases leaving the separator are purified and combined with the ash, water, and oxygen, yielding a hydrogen product. In the gas purification system, ammonia, water, hydrocarbon gases, and hydrogen sulfide are removed. The sulfide is then converted to elemental sulfur.

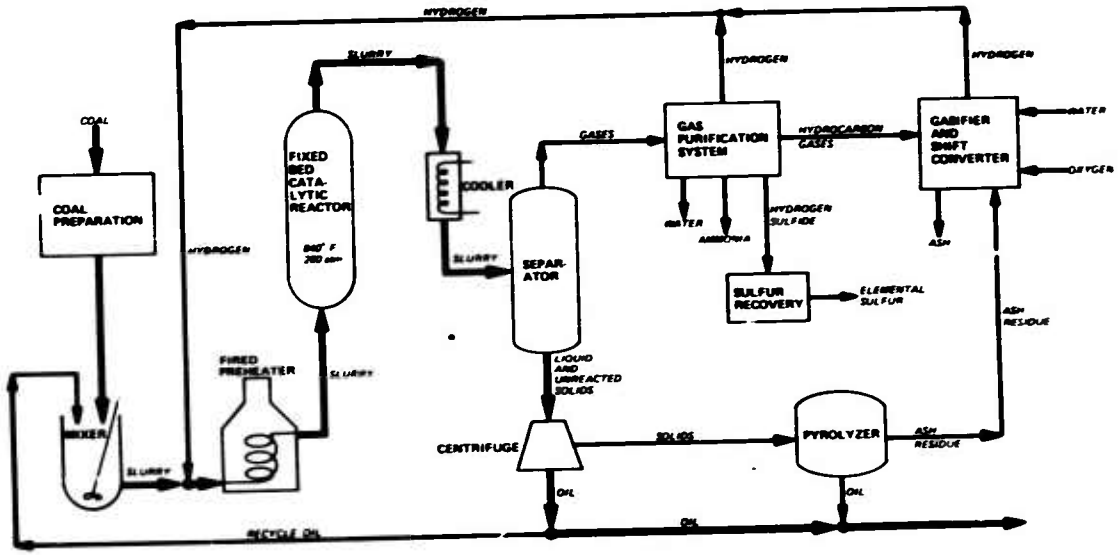

Figure F4. SYNTHOIL Process Flow Diagram

COAL LIQUEFACTION

COSTEAM PROCESS

BACKGROUND

Sponsor:	ERDA
Developer:	Pittsburgh Energy Research Center
Status:	10 tons/day, lignite-fed pilot plant demonstration unit under design. Unit to be located at Grand Forks, North Dakota.
Compatible Coal Type:	Lignite

CONCEPTUAL DESIGN No Data Available

Process Description

The schematic of the COSTEAM process is shown in Figure F5. It differs from other coal to oil processes which use hydrogen directly under conditions of high temperature and pressure in the presence of a catalyst. The COSTEAM process uses synthesis gas (or carbon monoxide) and steam, and does not require a catalyst.

A slurry consisting of 30-50 weight-percent of air-dried, pulverized coal in lignite-derived oil is pumped with synthesis gas or carbon monoxide into a stirred reactor at 4,000 psig and 800°F. Water required for the reaction is obtained from the coal. The effluent stream goes through a gas-liquid separation where the raw oil is separated from the product gas. Then a centrifuge or filter is used to remove any unreacted coal and ash from the oil. The resulting low-sulfur, low-ash oil can be used for steam generation in conventional power plants.

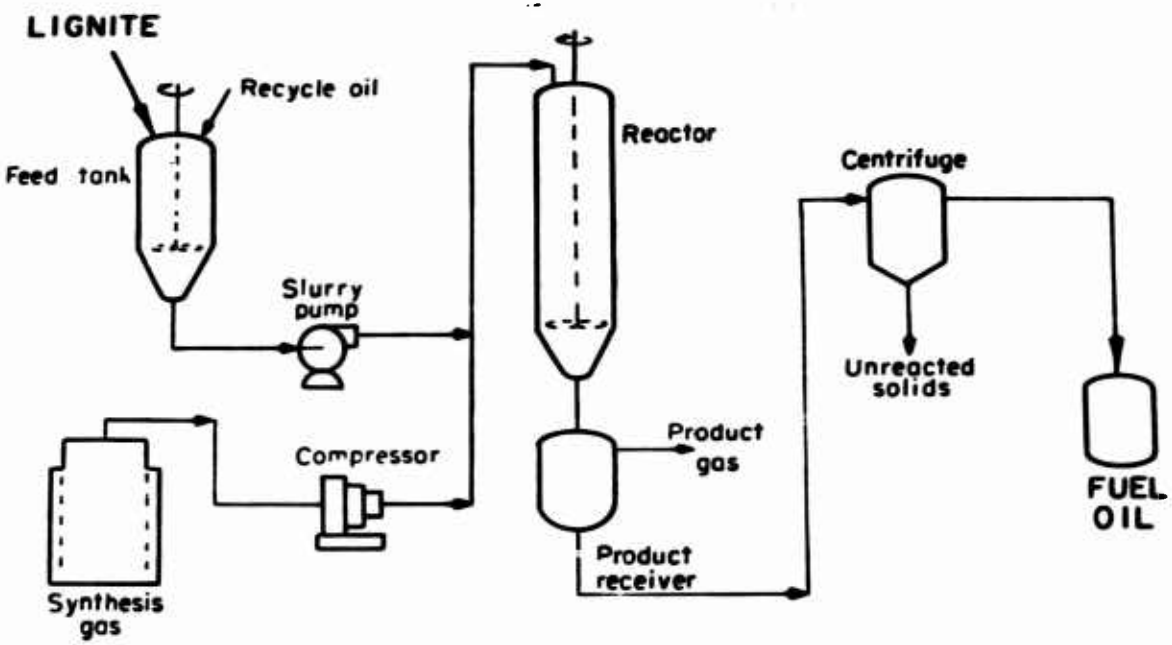

Figure F5. Costeam Process

APPENDIX G

EXAMPLES OF BOILER CONVERSION

Following are two examples of conversion of boilers originally designed to fire oil or gas to conventional coal-fired units. This discussion was excerpted from *Power Magazine* July 1976. A list of required equipment modifications and additions is included. A rough estimate of costs for modifications would be $3/lb of steam generated for oil- and gas-fired boilers when utilizing new, factory-assembled equipment or $6/lb for erection of modifications in the field.[6]

The first example compares a bottom-supported oil/gas-fired unit rated 300,000 lb/hr to the same unit modified for spreader-stoker firing. The capacity on coal, as limited by furnace size and grate area, would be about 200,000 lb/hr, but the need to limit velocities through the baffled boiler bank to reduce erosion to acceptable values lowers the nominal rated capacity to between 150,000 and 175,000 lb/hr, depending on the coal selected and the ash constituents produced during combustion.

A conversion of this type requires these steps:

- Modify the furnace bottom pressure parts to accommodate a spreader-stoker and an overfire air system.
- Provide space for the dropped furnace bottom, an ash hopper, and an ash removal system.
- Add superheater surface to maintain design steam temperature.
- Install additional sootblowers and associated piping, etc., to keep convection surfaces clean.
- Add hoppers for gas-pass fly ash collection and reinjection to minimize carbon loss.
- Modify the air heater to limit air temperature to the grate, and install an economizer to regain the heat-recovery capability lost in modifying the air heater.
- Install a dust collector ahead of the regenerative air heater to prevent air heater plugging. Where tubular air heaters are installed, a dust collector is not required.

---

[6] Perry, R. H., *Chemical Engineers Handbook*, Fifth Edition, (McGraw Hill, 1973).

- Install new foundations, support steel, ductwork, etc., as required.

- Modify combustion and safety controls.

- Add an induced-draft fan for balanced-draft operation.

- Modify the furnace buckstays and add ductwork stiffeners required for balanced-draft operation.

Such a conversion impacts heavily on plant operations. Field modifications, for example, take about 12 months (based on a 40-hr week), while the entire job, including engineering and equipment lead times, can run 18-24 months. During the conversion, the boiler will be out of service for perhaps 9 months. A comparable schedule for a new unit would require 13 months from order to shipment, about 12 months for installation, and 2-3 months for pre-operational cleaning, shakedown, and staff training.

A top-supported distillate-oil and gas-fired unit rated 400,000 lb/hr, converted to pulverized-coal firing, is also discussed. The capacity obtained with pulverized coal is a nominal 265,000 lb/hr. The new rating is limited by furnace heat-release rates and by the coal selected. If a spreader stoker had been selected for this unit, the maximum obtainable capacity would be only 200,000 lb/hr, because of physical constraints on grate size.

To convert this boiler to pulverized-coal firing it is necessary to:

- Modify the furnace-bottom pressure parts to accommodate a hopper for furnace-ash collection and removal. This includes revamping downcomers to serve the ring header replacing the original single header.

- Provide space for the dropped furnace bottom, an ash hopper, and an ash removal system.

- Modify the windboxes, coal nozzles, and ignition equipment.

- Add pulverizers and coal piping.
- Install sootblowers in the furnace walls, superheater, and boiler bank.
- Modify the superheater to obtain the desired spacings.
- Modify the air heater, as required, to prevent plugging by coal ash. Add a primary-flow air heater if the existing unit cannot develop the pulverizer air inlet temperature required because of high-moisture coal.
- Install new foundations, support steel ductwork, etc., as required.
- Modify the combustion and safety controls.
- Add an induced-draft fan to boost unit reliability.
- Modify the furnace buckstays and add ductwork stiffeners required for balanced-draft operation.

These modifications probably will take upwards of 24-30 months to complete, including engineering time. The limiting item here is the pulverizer equipment, which may require 24 months for delivery. By comparison, it takes about 30 months to bring a new top-supported unit into service.

CITED REFERENCES

Bell, A. W. and B. P. Breen, "Converting Gas Boilers to Oil and Coal," *Chemical Engineering* (April 26, 1976).

Department of the Army, *Annual Summary of Operations - Fiscal Year, 1975.*

Hollis, H. D., and V. Nida, *Characteristics of Energy Usage Military Installations,* U.S. Army Engineering Support Agency (1974).

Office of Fossil Energy, *Power and Combustion,* Quarterly Report October-December 1975 (ERDA, 1975).

Perry, R. H., *Chemical Engineers Handbook,* Fifth Edition, (McGraw-Hill, 1973).

Power and Combustion, Quarterly Report (Office of Fossil Energy, ERDA, October-December 1975), p 8.

UNCITED REFERENCES

Abel, W. T.,et al., *Removing Pyrite From Coal by Dry-Separation Methods*, United States Department of the Interior, 1973.

Agarwal, J. C., et al., "Chemical Desulfurization of Coal," *Mining Congress Journal* (1975).

Akhtar, S., et al., "Environmental Aspects of Synthoil Process for Converting Coal to Liquid Fuels," (presented at Environmental Aspects of Fuel Conversion Technology, (1975).

Ayer, F. A., *Symposium Proceedings: Environmental Aspects of Fuel Conversion Technology* (USEPA, 1975).

Ayer, F. A., *Symposium Proceedings:* Environmental Aspects of Fuel Conversion Technology (USEPA, 1974).

Babcock & Wilcox, Co., *Steam* (Babcock & Wilcox, Co., 1963).

Battelle Memorial Institute, *The Battelle Hydrothermal Coal Process* (1976).

Bell, A. W. and Breen, B. P., "Converting Gas Boilers to Oil and Coal," *Chemical Engineering* (April 26, 1976).

Bituminous Coal Research, Inc., *An Evaluation of Coal Cleaning Processes and Techniques for Removing Pyrite Sulfur From Coal* (1970).

Bodle, W. W. and Vygas, K. C., "Clean Fuels From Coal," *Oil and Gas Journal* (August 26, 1974).

Bogal, A. and Sherril R. C., "Oil-to-Coal Reconversion Isn't Easy, or Cheap and Switch Back to Coal Is Less Than Ideal" (Electric Light and Power Magazine, October 20 and November 24, 1975).

Borio, R. W.,et al., *Solvent Refined Coal Evaluation: Pulverization, Storage, and Combustion* (Electric Power Research Institute, 1976).

Brown, A., Jr., "Problems with Burning Coal and Oil in a Packaged Oil-Fired Boiler" (presented at 1976 Fuel Conference, October 1976).

Bureau of Mines, *Economic Analysis of Synthoil Plant Producing 50,000 Barrels Per Day of Liquid Fuels From Two Seams: Wyodak and Western Kentucky* (ERDA, 1975).

Bureau of Mines, *Preliminary Economic Analysis of CO_2 Acceptor Process Producing 250 Million Standard cu. ft./day of High-Btu Gas From Two Fuels, Subbituminous Coal and Lignite*, ERDA 76-57 (ERDA, 1975).

Bureau of Mines, *Preliminary Economic Analysis of H-Coal Processes Producing 50,000 Barrels Per Day of Liquid Fuels From Two Coal Seams: Wyodak and Illinois* (ERDA, 1975).

Bureau of Mines, *Preliminary Economic Analysis of Lurgi Plant Producing 250 Million SCFD of Gas from New Mexico Coal*, ERDA 76-58 (ERDA, 1975).

Bureau of Reclamation, *El Paso Coal Gasification Project - New Mexico* (Department of Interior, 1974).

Burke, D. P., "Fluidized Bed Combustion May Be A Better Way to Burn Coal" (Chemical Week, September 22, 1976).

Butler, E., editor, *Energy User News* (Fairchild Publications, January 3, 1977).

Cavanaugh, E. C., et al., *Environmental Assessment of Low-Btu Gasification and Its Utilization* (EPA, August 1976).

Cochron, N. P., "Oil and Gas From Coal," *Scientific American* (May 1976).

Cochron, N. P., "Review of Coal Liquefaction Processes" (1975).

Combustion Engineering, Inc., *Assessment of the Capability of Firing Clean Low-Btu Bases in Existing Coal, Oil and Gas-Fired Steam Generators* (Electric Power Research Institute, 1975).

Combustion Service and Equipment Company, *CS&E Systems Catalog* (1976).

Davis, J. C., "Coal Cleaning Readies for Wider Sulfur Removal Role, *Chemical Engineering* (March 1, 1976).

Diehl, E. K., *Current Research on Methods for Removal of Sulfur From Fossil Fuels and Power Plant Stocks* (Bituminous Coal Research, 1968).

Drerdorf, L. H. and Bloom, R., Jr., "The Cogas Project - One Method of Coal to Gas Conversion" (presented at SAE West Coast Meeting, 1973).

Edwards, R. G., et al., *Social Economic and Environmental Impacts of Coal Gasification and Liquefaction Plants.*

Farnsworth, J. Frank, Mitsak, D. Michael, and Karnody, F. J., "Clean Environment with the K-T Process" (presented at EPA Meeting, May 1974).

Farnsworth, J. F., et al., "K-T: Koppers Commercially Proven Coal and Multiple Fuel Gasifier" (presented to Assoc. of Iron and Steel Engineers Annual Convention, 1974).

Farnsworth, J. F., et al., "Utility Gas by the K-T Process" (presented to EPRI, April 1974).

Feretti, E. V., "Coal Hydrocarbonization, a Commercial Plant Design Concept" (presented at 68th Annual Meeting of AICHE, November 1975).

Finh, C., et al., "CO_2 Acceptor Process Pilot Plant - 1974 Rapid City, S. D." (presented at 6th Synthetic Pipeline Gas Symposium, 1974).

Fluor Utah, Inc., *Coal Liquefaction Technology* (1976).

Fluor Utah, Inc., *Coal Gasification Technology* (1976).

Fryling, G. E., *Combustion Engineering* (Combustion Engineering, Inc., 1966).

Fuel Economy Consultants, Inc., *Survey and Analysis of Fluidized Bed Combustion Work Being Conducted in Europe* (ERDA, 1976).

Gasior, S. J., "Fluidized Bed Gasification of Various Coals With Air-Stream Mixtures to Produce a Low-Btu Gas" (presented at 78th AICHE National Meeting, 1974).

Glazer, et al., *Emission from Processes Providing Clean Fuels* (USEPA, 1974).

Guthrie, K. M., *Process Plant Estimating Evaluation and Control* (Draftsmen Book Company of America, 1974).

Hammond, A. L., "Coal Research I: Is the Program Moving Ahead," *Science Magazine* (August 20, 1976).

Hammond, A. L., "Coal Research III: Liquefaction Has Far to Go," *Science Magazine* (September 3, 1976).

Hammond, A. L., "Coal Research IV: Direct Combustion Lags At Potential, *Science Magazine* (October 8, 1976).

Hamshar, J. A., et al., "Clean Fuels from Coal by the COED Process" (Presented at EPA Symposium, May 1974).

Henderson, T. A., *Synthetic Fuels Handbook* (Cameron Engineers, Inc., 1975).

Hoogendoir, V. C., and Salemon, J. M., "Sasol: Worlds Largest Oil from Coal Plant," *British Chemical Engineering* (May-August 1957).

Jahnig, C. E., *Evaluation of Pollution Control in Fossil Fuel Conversion Processes: Gasification: Section 5: BI-GAS Process* (EPA, 1975).

Jahnig, C. E. and Magce, E. M., *Evaluation of Pollution Control In Fossil Fuel Conversion Processes, Gasification:* Section I, CO_2 Acceptor Process (EPA, 1974).

Jahnig, C. E., *Evaluation of Pollution Control in Fossil Fuel Conversion Processes: Liquefaction*, Section 3, H-Coal Process (EPA, 1975).

Jahnig, C. E., *Evaluation of Pollution Control in Fossil Fuel Conversion Processes, Gasification:* Section 6, HYGAS Process (EPA, 1975).

Jahnig, C. E., *Evaluation of Pollution Control or Fossil Fuel Conversion Processes: Gasification:* Section 7, U-Gas Process (EPA, 1975).

Josephson, J., "How the Coal Slurry Pipeline in Arizona is Working," *Environmental Science and Technology Magazine* (November 1976).

Kafadeles, C. D. et al., *Evaluation of Pollution Control in Fossil Fuel Conversion Processes, Liquefaction: Section I, Coed Process* (National Environmental Research Center, 1975).

Kafadeles, C. D. and Magee, E. M., *Evaluation of Pollution Control in Fossil Fuel Conversion Process Gasification: Section 1: Synthane Process* (EPA, 1974).

Kamody, J. F. and Farnsworth, J. F., "Gas from the Koppers-Totzek Process for Steam and Power Generation" (presented at Industrial Fuel Conference, 1974).

Kearns, D. L., et al., "Sulfur Emission Control with Limestone/ Dolomite in Advanced Fossil Fuel Processing Systems (1974).

Kronsedar, J. G., "Sasol II: South Africa's Oil from Coal Plant" (Hydrocarbon Processing, July 1976).

Lewis, P. S., et al., "Low Btu Gas for Power Generation" (1973 Lignite Symposium).

Magee, E. M., *Evaluation of Pollution Control in Fossil Fuel Conversion Processes* (EPA, 1976).

Magee, E. M. and Shaw, H., "Technology Needs for Pollution Abatement in Fossil Fuel Conversion Processes" (1974).

McNeal, W. H. and Nielson, G. F., *1976 Keystone Coal Industry Manual* (Charles H. Daily Publishers, McGraw-Hill Mining Publications, 1976).

Morgan, W. D., "Coalcon's Clean Boiler Fuels for Coal Demonstration Plant" (Presented at AICHE Convention, 1975).

Murry, R. G., *EPA Program Status Report - Synthetic Fuels Program* (Environmental Protection Agency, 1975).

O'Connor, J. J., et al., "Power from Coal," *Power Magazine* (March, April 1974).

O'Hara, J. B., "Coal Liquefaction" (Ralph M. Parsons Company).

O'Hara, J. B., "State of the Art: Coal Liquefaction," *Hydrocarbon Processing* (November 1976).

O'Hara, J. B., et al., "Synthetic Fuels from Coal by Fischer-Tropsch" (Ralph Parson Co., 1975).

Page, J. S., *Estimates Manual of Equipment and Installation Costs* (Gulf Publishing Company, 1963).

Ralph M. Parsons Company, *Commercial Complex Conceptual Design/ Economic Analysis, Oil and Power by COED Based Coal Conversion* (ERDA, 1975).

Perry H., "Coal Conversion Technology," *Chemical Engineering* (July 22, 1974).

Phinney, J. A., "Coal Liquefaction at the Cresap, W. VA, Pilot Plant" (prepared for Coal Conversion Pilot Plant Symposium, 1974).

Pope, Evans & Robins, Inc., *Interim Report No. 1 on Multicell Fluidized Bed Boiler Design, Construction and Test Program* (U.S. Department of the Interior, 1974).

Popper, H., Modern Cost-Engineering Techniques (McGraw-Hill, 1970).

Research & Education Association, *Modern Energy Technology, Vol 1 and 11* (1975).

Schora, F. C., et al., "Fuel Gas from Coal" (MSS Series on Energy Related Technologies - Papers, 1976).

Schora, F. C., et al., "The Hygas Process" (presented at 12th World Gas Conference and Exhibition, June 1973).

Schweiger, R. G., "Should You Convert to Coal," *Power Magazine*, Vol. 121, No. 7 (July 1976).

Segeter, et al., *Gas Engineers Handbook* (Industrial Press, 1969).

Shaw, et al., *Evaluation of Pollution Control in Fossil Fuel Conversion Processes; Gasification; Section I: Lurgi Process* (EPA, 1974).

Southern Research Institute, *A Survey of Technical Information Related to Fine-Particle Control* (Electric Power Research Institute, 1975).

Stokes, C. A., "Gas from Coal Has Future as Boiler Fuel," *Chemical Engineering* (September 6, 1976).

Strassen, J. D., "General Facilities, Off-site and Utilities for Coal Gasification Plants" (Fluor Engineers).

Stotler, H. H., "H-Coal Pilot Plant Program" (presented at 67th Annual Meeting of AICHE, 1974).

Swift, W. M., "Potential of Fluidized Bed Combustion for Reducing Trace Emissions" (presented at 68th Annual Meeting of ADCA, 1975).

Thompson, T. L. and Wasp, E. J., "Liquid Coal: Vital to the U. S. Economy" (Pipeline Industry, September 1974).

Tillman, D. A., "Status of Coal Gasification" (Environmental Sciences and Technology, 1976).

White, J. W., et al., *Papers Clean Fuels from Coal Symposium II* (Institute of Gas Technology, 1973).

White, P. C., *Coal Gasification Quarterly Report* (ERDA, July-September, 1975).

White, P. C., *Coal Liquefaction Quarterly Report* (ERDA, July-September 1975).

White, P. C., *Coal Power and Combustion Quarterly Report* (ERDA, 1975).

White, P. C., *Coal Demonstration Plants Quarterly Report* (ERDA, 1975).

CERL DISTRIBUTION

Picatinny Arsenal
ATTN: SMUPA-VP3

Director of Facilities Engineering
APO New York 09827
APO Seattle, WA 98749

DARCOM STTT-EUR
APO New York 09710

USA Liaison Detachment
ATTN: Library
New York, NY 10007

West Point, NY 10996
ATTN: Dept of Mechanics
ATTN: Library

HQDA (SGRD-EDE)

Chief of Engineers
ATTN: Tech Monitor
ATTN: DAEN-ASI-L (2)
ATTN: DAEN-FEB
ATTN: DAEN-FEP
ATTN: DAEN-FEU
ATTN: DAEN-FEZ-A
ATTN: DAEN-MCZ-S
ATTN: DAEN-RDL
ATTN: DAEN-PMS (7)
for forwarding to
National Defense Headquarters
Director General of Construction
Ottawa, Ontario K1A0K2
Canada

Canadian Forces Liaison Officer (4)
US Army Mobility Equipment
Research and Development Command
Ft Belvoir, VA 22060

Div of Bldg Research
National Research Council
Montreal Road
Ottawa, Ontario, K1A0R6

Airports and Const. Services Dir.
Technical Information Reference
Centre
KAOL, Transport Canada Building
Place de Ville
Ottawa, Ontario Canada K1A0N8

USA-CRREL

USA-WES
ATTN: Concrete Laboratory
ATTN: Library

Ft Belvoir, VA 22060
ATTN: Kingman Building, Library
ATTN: FESA

Ft Monroe, VA 23651
ATTN: ATEN
ATTN: ATEN-FE-U
ATTN: ATEN-C-C/D. Lyon

Ft Lee, VA 23801
ATTN: DRXMC-D (2)

Director
HQ, US Army Garrison, Honshu
ATTN: DFE
APO San Francisco 96343

US Army/FESA
Bldg 358
Ft Belvoir, VA 22060

US Army Foreign Science & Tech Center
ATTN: Charlottesville, VA 22901
ATTN: Far East Office

6th US Army
ATTN: AFKC-LG-E

US Army Engineer District
New York
ATTN: Chief, NANEN-E
ATTN: Chief, Design Br.
Buffalo
ATTN: Library
Pittsburgh
ATTN: Library
ATTN: Chief, Engr Div
Philadelphia
ATTN: Chief, NAPEN-D
Baltimore
ATTN: Chief, Engr Div
Norfolk
ATTN: Library
ATTN: Chief, NAOEN-M
Huntington
ATTN: Library
ATTN: Chief, ORHED

US Army Engineer District
Wilmington
ATTN: Chief, SAWEN-PP
ATTN: Chief, SAWEN-D
Charleston
ATTN: Chief, Engr Div
Savannah
ATTN: Library
ATTN: Chief, SASAS-L
Mobile
ATTN: Chief, SAMEN-C
Nashville
ATTN: Library
Vicksburg
ATTN: Chief, Engr Div
Louisville
ATTN: Chief, Engr Div
Detroit
ATTN: Library
St. Paul
ATTN: Chief, ED
Rock Island
ATTN: Library
ATTN: Chief, Engr Div
Chicago
ATTN: Chief, NCCPD-ER
St. Louis
ATTN: Library
ATTN: Chief, ED-B
ATTN: Chief, ED-D
Kansas City
ATTN: Library (2)
ATTN: Chief, Engr Div
Omaha
ATTN: Chief, Engr Div
New Orleans
ATTN: Library
ATTN: Chief, LMNED-DG
Little Rock
ATTN: Chief, Engr Div
Tulsa
ATTN: Library
Fort Worth
ATTN: Library
ATTN: Chief, SWFED-D
ATTN: Chief, SWFED-MA/MR
Albuquerque
ATTN: Library
Los Angeles
ATTN: Library
San Francisco
ATTN: Chief, Engr Div
Sacramento
ATTN: Library, Room 8307
ATTN: Chief, SPKED-D
Far East
ATTN: Chief, Engr Div
Japan
ATTN: Library
Portland
ATTN: Library
Seattle
ATTN: Chief, NPSEN-PL-WC
ATTN: Chief, NPSEN-PL-ER
Walla Walla
ATTN: Library
ATTN: Chief, Engr Div
Alaska
ATTN: Library
ATTN: Chief, NPADE-R

US Army Engineer Division
Europe
ATTN: Technical Library
New England
ATTN: Library
ATTN: Chief, NEDED-T
North Atlantic
ATTN: Library
ATTN: Chief, NADEN-T
Middle East (Rear)
ATTN: MEDED-T
South Atlantic
ATTN: Chief, SAEN-TE
ATTN: Library
Huntsville
ATTN: Library (2)
ATTN: Chief, HNDED-SR
ATTN: Chief, HNDED-CS
ATTN: Chief, HNDED-ME
Lower Mississippi Valley
ATTN: Library
Ohio River
ATTN: Laboratory
ATTN: Library
ATTN: Chief, Engr Div

US Army Engineer Division
North Central
ATTN: Library
ATTN: Chief, Engr Div
Missouri River
ATTN: Library (2)
ATTN: Chief, Engr Div
ATTN: Laboratory
Southwestern
ATTN: Library
ATTN: Chief, SWDED-TM
South Pacific
ATTN: Chief, SPDED-TG
Pacific Ocean
ATTN: Chief, PODED-D
ATTN: Chief, PODED-P
ATTN: Chief, PODED-MP
ATTN: Chief, Engr Div
North Pacific
ATTN: Chief, Engr Div

Facilities Engineer
Carlisle Barracks, PA 17013
Ft Hood, TX 76544
FORSCOM
Ft Devens, MA 01433
Ft George G. Meade, MD 20755
Ft McPherson, GA 30330
Ft Sam Houston, TX 78234
Ft Carson, CO 80913
Ft Lewis, WA 98433
USAECOM
Ft Monmouth, NJ 07703
TRADOC
Ft Dix, NJ 08610
Ft Belvoir, VA 22060
Ft Lee, VA 23801
Ft Gordon, GA 30905
Ft McClellan, AL 36201
Ft Knox, KY 40121
Ft Benjamin Harrison, IN 46216
Ft Leonard Wood, MO 65473
Ft Sill, OK 73503
Ft Bliss, TX 79916
USATCFE
Ft Eustis, VA 23604
DSCPER
West Point, NY 10996
USAIC (3)
Ft Benning, GA 31905
USAAVNC
Ft Rucker, AL 36361
CAC&FL (2)
Ft Leavenworth, KS 66027
AMC
Dugway, UT 84022
USACC
Ft Huachuca, AZ 85613
HQ, 1st Inf Div & Ft Riley, KS 66442
HQ, 7th Inf Div & Ft Ord, CA 93941

AF/PREEU
Bolling AFB, DC 20332

AF Civil Engr Center/XRL
Tyndall AFB, FL 32401

Little Rock AFB
ATTN: 314/DEEE (Mr. Gillham)

Kirtland AFB, NM 87117
ATTN: Technical Library (SUL)

Naval Facilities Engr Command
ATTN: Code 04
Alexandria, VA 22332

Port Hueneme, CA 93043
ATTN: Library Code (L08A)
ATTN: Morrell Library

Washington, DC
ATTN: Bldg Research Advisory Board
ATTN: Transportation Research Board
ATTN: Library of Congress (2)
ATTN: Federal Aviation Administration
ATTN: Dept of Transportation Library

Defense Documentation Center (12)

Engineerin Societies Library
New York, NY 10017

Commander
NCBC
ATTN: Code L63/D. Williams (3)
Port Hueneme, CA 93043

Commander
NCBC
ATTN: Code L03AE/Slaminski (3)
Port Hueneme, CA 93043

Aluminum Company of America
ATTN: G. B. Barthold
1200 Ring Bldg
WASH DC 20036

HQ USAF/PREM
WASH DC 20330

HQ USAF/PREE
WASH DC 20330

HQ USAF/PREVP
ATTN: MAJ Frank Sempel
WASH DC 20330

TAC/DEEV
ATTN: Mr. Gil Burnett
Langley AFB, VA 23665

USAFSS/DEMU
ATTN: Mr. John Hale
San Antonio, TX 78241

CINCUSAFE/DEPV
ATTN: MAJ Robinson
APO New York 09012

AFRES/DEMM
ATTN: Mr. James Rachal
Robins AFB, GA 31098

USAFA/DEV
ATTN: COL D. Reaves
USAF Academy, CO 80840

Det 1 HQ ADTC/ECW
ATTN: CAPT R. Olfenbuttel (2)
Tyndall AFB, FL 32403

CINCAD/DEV
ATTN: LT COL Church Watkins
Ent AFB, CO 80912

AFSC/DEEE
ATTN: CAPT George Franklin
Richards-Gebaur AFB, MO 64030

AFLC/DEPV
ATTN: Mr. J. F. Hampton
Wright-Patterson AFB, OH 45433

AFLC/DEMU
ATTN: Mr. Robert Keggan
Wright-Patterson AFB, OH 45433

AFSC/DEE
ATTN: Mr. Martin Noland
Andrews AFB, DC 20334

ATC/DEPV
ATTN: Mr. A. E. Cullins
Randolph AFB, TX 78148

3800 ABW/DEE
ATTN: Mr. Ralph Stanford
Maxwell AFB, AL 36112

CINCSAC/DEV
ATTN: LT COL E. Hanson
Offutt AFB, NB 68113

ATC/DEMU
ATTN: Mr. Bernard Lindenberg
Randolph AFB, TX 78148

AAC/DEV
ATTN: Mr. R. Cameron
APO Seattle 98742

MAC/DEE
ATTN: Mr. Wayne Caughman
Scott AFB, IL 62225

CINCPACAF/DEV
ATTN: Mr. Richard Okamura
APO San Francisco, CA 96274

Hittman Associates
Application of modern coal technologies for military facilities : v.2 , evaluation of the applicability and cost of current and emerging coal technologies for the utilization of coal as a primary energy source / Champaign, Ill. : Construction Engineering Research Laboratory ; Springfield, Va. : available from National Technical Information Service , 1978.
248p. : ill. ; 27 cm. (Interim report - Construction Engineering Research Laboratory ; E-130, vol. 2)

Hittman Associates
Application of modern coal ... (card 2)

1. Coal. 2. U.S. Army--facilities. 3. Energy policy. I. Title. II. Title : Evaluation of the applicability and cost of current and emerging coal technologies for the utilization of coal as a primary energy source. III. Series: U.S. Construction Engineering Research Laboratory. Interim report ; E-130, vol. 2.