AD-A046 367 BOEING VERTOL CO PHILADELPHIA PA F/G 1/3
HESCOMP. THE HELICOPTER SIZING AND PERFORMANCE COMPUTER PROGRAM--ETC(U)
NOV 74 S J DAVIS, J S WISNIEWSKI N62269-74-C-0757
UNCLASSIFIED D210-10699-2 NL

1 OF 6
AD A046367

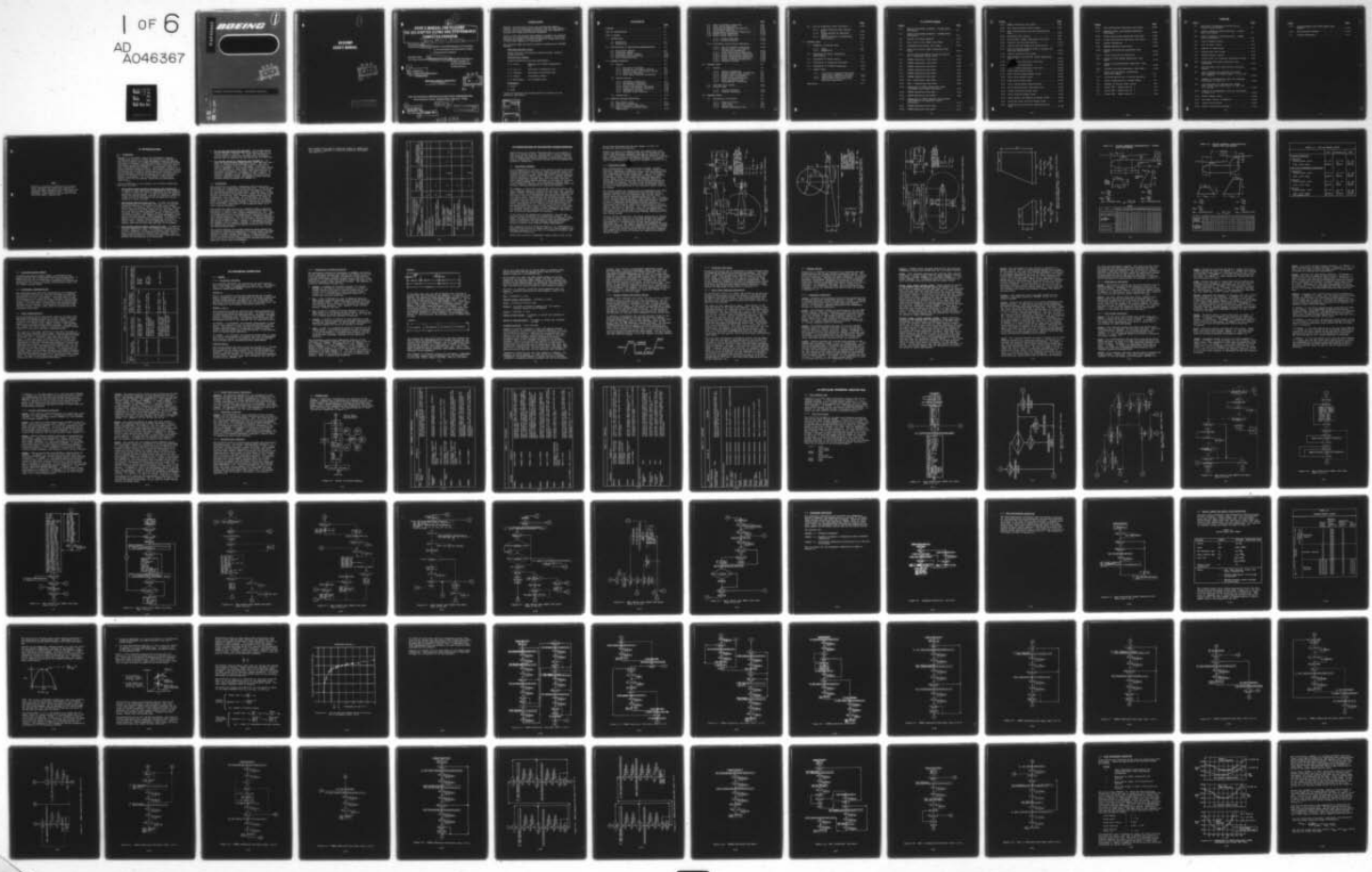

AD A046367

BOEING

DDC
RECEIVED
NOV 7 1977
F

APPROVED FOR PUBLIC RELEASE; DISTRIBUTION UNLIMITED.

AD NO.
DDC FILE COPY

HESCOMP
USER'S MANUAL

DDC
RECEIVED
NOV 7 1977
F

DISTRIBUTION STATEMENT A
Approved for public release;
Distribution Unlimited

USER'S MANUAL FOR HESCOMP. THE HELICOPTER SIZING AND PERFORMANCE COMPUTER PROGRAM. User's Manual. Revision,

Developed under
Contract No NAS2-6107 (Study of the Methodology for Evaluation of an Interurban and Intraurban V/STOL Transportation System)

Revised under
U.S. Navy Contract No N62269-74-C-0757 (HESCOMP Modified to Enable Analysis of Advanced Helicopter Configurations)

By S. JON DAVIS
and J. S. WISNIEWSKI (Weights)
Prepared By

BOEING VERTOL COMPANY
A DIVISION OF THE BOEING COMPANY
P.O. BOX 16858
PHILADELPHIA, PENNSYLVANIA 19142

DDC
RECEIVED
NOV
F

FOR THE NATIONAL AERONAUTICS AND SPACE ADMINISTRATION
Ames Research Center, Moffett Field, California 94035

D210-10699-2
September 1973
First Revision November 1974

529 p.

DISTRIBUTION STATEMENT A
Approved for public release;
Distribution Unlimited

403682

FOREWORD

HESCOMP, the Helicopter Sizing and Performance Computer Program, provides helicopter designers with the same capability for sizing and performance calculations that VASCOMP II provides for fixed-wing aircraft designers.

Since in time the program will change to reflect new thinking and grow to include more sophisticated methods of simulating advanced helicopters, this User's Manual is loose-leaf bound to facilitate updating of the program.

The following NASA and Boeing personnel developed the HESCOMP program:

NASA Ames Research Center

Thomas Galloway, Aeronautical Systems Branch, Systems Studies Division

Boeing-Vertol Company

Program Formulation and Data Development:

S. J. Davis	Research and V/STOL Aerodynamics Unit
E. M. Low, II	Helicopter Performance Unit
C. A. Widdison	Helicopter Performance Unit
A. H. Schoen	Preliminary Design
J. S. Wisniewski	R & D Weights Unit

Programming

R. Knopf

H. Shah

Inquiries regarding the program should be directed to the pertinent individuals.

ACCESSION for
NTIS White Section
DDC Buff Section
UNANNOUNCED
JUSTIFICATION
BY
DISTRIBUTION/AVAILABILITY CODES
Dist. SPECIAL
A

CONTENTS

		Page
FOREWORD		ii
LIST OF ILLUSTRATIONS		vi
LIST OF TABLES		ix
1.0	INTRODUCTION	1-1
1.1	Background	1-1
1.2	Application	1-2
2.0	SPECIFICATION OF HELICOPTER CHARACTERISTICS	2-1
2.1	Helicopter Geometry	2-1
2.2	Propulsion System	2-2
2.3	Helicopter Weight Summary	2-10
2.4	Aerodynamic Characteristics	2-10
2.5	Rotor Characteristics	2-10
3.0	PROGRAM OPERATION	3-1
3.1	General	3-1
3.1.1	The Option Indicator	3-1
3.1.2	Description of Mission Profile	3-2
3.1.3	Special Flight Path Control Option	3-5
3.1.4	Propeller Efficiency	3-6
3.1.5	Rotor Power Required Calculation	3-6
3.2	Program Options	3-7
3.2.1	Propulsion Indicators	3-7
3.2.2	Aerodynamics Indicators	3-10
3.2.3	Size Trends Indicators	3-10
3.2.4	Mission Performance Indicators	3-13
3.2.5	Flight Path Control Indicators	3-15
3.2.6	Atmosphere Indicator	3-15
3.2.7	Optional Print Indicator	3-15
3.3	Program Flow	3-16
4.0	DETAILED PROGRAM DESCRIPTION	4-1
4.1	Main Control Loop	4-1
4.2	Atmosphere Subroutine	4-15
4.3	Drag Calculations Subroutine	4-17
4.4	Engine Library and Engine Cycle Subroutines	4-19

		Page
4.5	Rotor Performance Subroutine	4-46
4.6	Rotor Limits Subroutine	4-66
4.7	Propeller Performance Calculations	4-69
4.8	Size Trends Subroutine	4-84
4.9	Aerodynamics Calculations Subroutine	4-109
4.10	Engine Sizing Subroutine	4-128
4.11	Weight Trends Subroutine	4-143
4.11.1	Weight Trend Data	4-143
4.11.2	Aircraft Balance	4-185
4.12	Performance Calculations Subprogram	4-194
4.12.1	Taxi Calculations Subroutine	4-200
4.12.2	Takeoff, Hover, and Landing Calculations Subroutine	4-203
4.12.3	Climb Calculations Subroutine	4-208
4.12.4	Cruise Calculations Subroutine	4-226
4.12.5	Descent Calculations Subroutine	4-250
4.12.6	Loiter Calculations Subroutine	4-262
4.12.7	Change of Weight Subroutines	4-270
4.12.8	Transfer Altitude	4-273
5.0	PROGRAM INPUT	5-1
5.1	General	5-1
5.1.1	General Information	5-1
5.1.2	Aircraft Description Information	5-1
5.1.3	Mission Profile Information	5-2
5.1.4	Engine Cycle Information	5-2
5.1.5	Propeller Performance Data	5-3
5.1.6	Rotor Performance Data	5-3
5.1.7	Supplementary Information	5-3
5.2	Specimen Input Sheets	5-45
5.3	Program Input	5-71
5.3.1	Program Variables	5-71
5.3.2	Program Indicators	5-89
6.0	PROGRAM OUTPUT	6-1
6.1	Description of Printout	6-1
6.1.1	General Printout	6-1
6.1.2	Input Data	6-2
6.1.3	Sizing Data	6-2
6.1.4	Mission Performance Data	6-11

		Page
6.2	List of Diagnostic Error Printouts	6-18
6.2.1	Errors Affecting Main Control Loop	6-18
6.2.2	Errors Related to Tabulated Inputs	6-21
6.2.3	Errors Occuring in Performance Calculations	6-24
7.0	PROGRAM USAGE	7-1
7.1	Comments on Program Usage	7-1
7.1.1	Rules	7-1
7.1.2	Suggestions	7-2
7.2	Discussion of Rotor Performance Calculations	7-3
7.3	Discussion of Rotor Limits	7-9
7.4	Discussion of Propeller Efficiency	7-11
7.5	Discussion of Program Tolerances	7-13
7.6	Sample Cases	7-15
7.6.1	Single-Rotor Compound Helicopter (Auxiliary Independent Engines) .	7-15
7.6.2	Tandem-Rotor Winged Helicopter . .	7-53
7.6.3	Coaxial-Rotor Helicopter with Auxiliary Propulsion	7-81
	References	R-1

ILLUSTRATIONS

Figure		Page
2-1	Typical Helicopter Geometry ∿ Single Rotor Helicopter	2-3
2-2	Typical Helicopter Geometry ∿ Tandem Rotor Helicopter	2-5
3-1	Sketch of Program Geometry	3-15
4-1	Main Control Loop (MAIN) Flow Chart	4-2
4-2	Atmosphere Subroutine, Flow Chart	4-16
4-3	Drag Calculations (DRAG) Subroutine Flow Chart	4-18
4-4	Typical Reynolds Number Correction Factor for a Turboshaft Engine Cycle	4-24
4-5	POWAVL Subroutine, Flow Chart	4-26
4-6	POWREQ Subroutine, Flow Chart	4-29
4-7	POWAVI Subroutine Flow Chart	4-30
4-8	POWRQI Subroutine Flow Chart	4-37
4-9	THRAVL Subroutine Flow Chart	4-39
4-10	THRREQ Subroutine Flow Chart	4-42
4-11	ENG 1 Subroutine, Flow Chart	4-43
4-12	ENG 1 I Subroutine Flow Chart	4-44
4-13	Comparison of "Short Form Aero" Rotor Performance and Flight Test Data	4-47
4-14	ROTPOW Subroutine Flow Chart	4-50
4-15	ROTLIM Subroutine Flow Chart	4-67
4-16	Comparison of "Short Method" and Detailed Calculations for Propeller Cruise Efficiency	4-72
4-17	THRUST Subroutine Flow Chart	4-73
4-18	POWER Subroutine Flow Chart	4-77

Figure		Page
4-19	POWERI Subroutine Flow Chart	4-80
4-20	Tail Rotor Diameter Sizing Trend	4-86
4-21	Tail Rotor/Vertical Tain Fin Interference Data	4-88
4-22	Horizontal Tail Sizing	4-92
4-23	Size Trends (SIZTR) Subroutine Flow Chart . .	4-95
4-24	Parasite Drag Buildup Options	4-110
4-25	Typical Hub and Shank Drag Coefficients . . .	4-113
4-26	Rotor Hub/Shank Geometry Used in Program for Hub Drag Calculations	4-115
4-27	Typical Parasite Drag Trends	4-118
4-28	Aerodynamics Calculations (AERO) Subroutine Flow Chart	4-124
4-29	Engine Sizing Subroutine Flow Chart	4-131
4-30	Weight Trends Subroutine	4-144
4-31	Weight Trends Subroutine Flow Chart	4-146
4-32	Rotor Blade Weight Trend	4-159
4-33	Rotor Hub and Hinge Weight Trend	4-160
4-34	Rotor Group Weight Trend	4-162
4-35	Body Group Weight Trend	4-165
4-36	Drive System Weight Trend-Primary	4-173
4-37	Drive System Weight Trend-Auxiliary	4-175
4-38	Cockpit Controls Weight Trend	4-177
4-39	Rotor Controls Weight Trend	4-178
4-40	Rotor System and Hydraulics Weight Trend . . .	4-179
4-41	Auxiliary Rotor Controls Weight Trend	4-181
4-42	Performance Calculations Subprogram Flow Chart	4-195

Figure		Page
4-43	Taxi Calculations Subroutine Flow Chart . . .	4-201
4-44	Takeoff, Hover, and Landing Subroutine Flow Chart	4-204
4-45	Climb Calculations Subroutine Flow Chart . .	4-210
4-46	Cruise Calculations Subroutine Flow Chart . .	4-228
4-47	Descent Boundaries	4-251
4-48	DESPOW Subroutine Flow Chart	4-254
4-49	Descent Calculations Subroutine Flow Chart	4-256
4-50	Loiter Calculations Subroutine	4-263
4-51	Change of Fuel Weight Subroutine, Flow Chart	4-271
4-52	Change of Payload Weight Subroutine, Flow Chart	4-272
4-53	Transfer Altitude Subroutine, Flow Chart . .	4-274
7-1	Short Form Aero Rotor Performance Equations Summary	7-5
7-2	Download Sensitivity to Ground Proximity . .	7-7
7-3	Thrust Augmentation in Ground Effect	7-8
7-4	Summary of Typical Rotor Limits	7-10
7-5	Design MSN - Sample Case No. 1	7-16
7-6	Design MSN - Sample Case No. 2	7-53
7-7	Design MSN - Sample Case No. 3	7-81

TABLES

Table		Page
1-1	Helicopter Configurations Which may be Studied Using HESCOMP	1-4
2-1	Typical Geometric Characteristics - Single Rotor Helicopters	2-7
2-2	Typical Geometric Characteristics - Tandem Rotor Helicopters	2-8
2-3	List of Engine Cycles	2-9
2-4	List of Rotor Cycles	2-11
3-1	Summary of Subroutines	3-17
4-1	Engine Cycle Data Format	4-19
4-2	HESCOMP Engine Library	4-20
4-3	Coefficients for Propeller Equivalent Polars	4-83
4-4	Production Helicopter Horizontal Tail Parameters	4-92
4-5	Hub and Shank Drag Coefficients Correction Summary	4-116
4-6	Drag Breakdown for Hypothetical Single Rotor Compound Helicopter $R_e/Ft = 1.56 \times 10^6$ (V = 189 Kt)	4-120
4-7	Summary of Aerodynamics Input for Compound Helicopter of Table 4-6	4-121
4-8	Drag Breakdown for Hypothetical Tandem Rotor Winged Helicopter $R_e/Ft = 1.49 \times 10^6$ (V = 181 Kt)	4-122
4-9	Summary of Aerodynamics Input for Helicopter of Table 4-8	4-123
4-10	Weight Summary Form	4-145
4-11	Helicopter Weight Information	4-154
4-12	Landing Gear Weights	4-167
4-13	Engine Installation Weights	4-171

Table		Page
4-14	Fixed Equipment and Fixed Useful Load Weights	4-182
4-15	Multiplicative Factors	4-184
7-1	Program Tolerances	7-14

NOTE

Section 5.3 contains a definition of program input variables and indicators; section 6.2 lists the major diagnostic error printouts and describes their probable cause. For ease of reference, these sections are printed on blue and green paper, respectively.

1.0 INTRODUCTION

1.1 BACKGROUND

HESCOMP is a helicopter sizing and performance computer program very similar in format and operation to VASCOMP II, the V/STOL Aircraft Sizing and Performance Computer Program, described in Reference 1. This similarity is dictated by the requirement to obtain compatibility in both usage and results when using HESCOMP and VASCOMP II in helicopter-V/STOL aircraft comparative design studies. The program's purpose is to rapidly provide helicopter sizing and mission performance data. The program can be used to define design requirements, such as weight breakdown, required propulsive power, and physical dimensions of aircraft which are designed to meet specified mission requirements. It is also useful in sensitivity studies involving both design trade-offs and performance trade-offs.

During formulation of the program, the following guidelines have been followed:

1. The program should maintain generality and flexibility - A program of this type must be comprehensive and flexible in order to permit an accurate simulation of many types of helicopter configurations. It must be capable of approximating the design process involved in layout and sizing of a wide variety of helicopters and synthesizing the performance of these aircraft.

2. The program should be easy to use - In order to minimize hand computation of input data, the input to the program primarily consists of a series of single point values specifying, for example, main rotor disc loading, solidity, twist, aspect ratio, taper ratio, etc. of the wing, tail, and rotor pylons (where applicable), the geometry of the fuselage, the type of propulsion system, a description of the mission profile, and weights of fixed equipment, fixed useful load and payload. Where necessary to adequately describe certain functional relationships, the input is in tabular form. However, since preparation of data for tabular input is generally more cumbersome and time consuming, this form of input has been kept to a minimum.

3. The program should minimize computation time - In order to minimize computation time, the program makes ample use of optional computation paths. To eliminate large quantities of null arithmetic, it avoids calculations which do not apply to the particular aircraft being studied. This is accomplished by means of a series of input indicators that specify the calculations to be performed.

4. The program should be well balanced - The program should not be extremely sophisticated in one detail and yet extremely simple in another. To offset the possibility of this occurrence, great care has been taken to examine methods used to describe the helicopter and its operation.

5. The program should be compatible with VASCOMP II - In order to insure program compatibility, care has been exercised in planning the input/output format. The input sheets are similar (and in a few cases - identical) to those of VASCOMP II. The output format is the same except for the additions of those output quantities peculiar to helicopter performance. Further, this User's Manual is identical in format to the VASCOMP II User's Manual. In addition, HESCOMP utilizes (unchanged) the engine cycle library, propeller tables, and propeller short form performance method developed for VASCOMP II.

1.2 APPLICATION

The program has two primary independent applications and a third which is a combination of the first two. It may be used for the sizing of helicopters for which the type of aircraft and the mission profile are specified. Alternatively, it may be used for mission calculations for aircraft for which sizing details (gross weight, fuel available, engine power and fuel consumption, etc.) are known. As a combination of these two capabilities, the program may be used to first size a helicopter for a given mission and then calculate the off-design point performance for other missions. The option of calculation to be used is specified to the program by means of an input "option indicator."

The program has been written in a manner to make it directly applicable to sensitivity studies to determine the effect of variations in weight, drag, engine characteristics, etc. This is accomplished by use of incremental multiplicative and additive factors applied to the gross weight, component drag and fuel required equations. For the most part, the multiplicative factors are nominally equal to unity and the additive factors are nominally equal to zero. However, to determine the effect, for example, of a 10 percent increase in drive system weight, the appropriate multiplicative factor can be set to 1.10 and the sizing program rerun.

The program contains size trends equations which reflect the variation of helicopter dimensions with gross weight, detailed statistical weight trends equations, a routine for sizing of engines to match airframe requirements, a comprehensive library of engine cycle data, a library of rotor cycle data, and a variety of optional procedures for calculating rotor and propeller (cruise only) performance.

The program can be used to study any single or tandem rotor pure, winged, compound, or auxiliary propulsion helicopter (see Table 1-1).

TABLE 1-1. HELICOPTER CONFIGURATIONS WHICH MAY BE STUDIED USING HESCOMP.

Helicopter Type (Both Single & Tandem Rotor) / Additional Lift/Propulsion System Components Which Must be Added to "Pure" Conf.	Wing	Propeller for Auxiliary Propulsion	Auxiliary Independent Engines	Type of Auxiliary Independent Engines		
				T/Shaft	T/Fan	T/Jet
Pure Helicopter						
Winged Helicopter	X					
Compound Helicopter						
(1) Coupled (prim. engines drive auxiliary propulsion system)	X	X				
(2) Auxiliary independent propulsion system						
(a) T/Shaft engine	X	X	X	X		
(b) T/Fan engine	X		X		X	
(c) T/Jet engine	X		X			X
Auxiliary Propulsion Helicopter						
(1) Coupled (prim. engines drive auxiliary propulsion system)		X				
(2) Auxiliary independent propulsion system						
(a) T/Shaft engine		X	X	X		
(b) T/Fan engine			X		X	
(c) T/Jet engine			X			X

2.0 SPECIFICATION OF HELICOPTER CHARACTERISTICS

Specification of aircraft characteristics to the program is made in a variety of ways: through use of input indicators which specify the types of calculations to be made; through use of weights factors and constants; aerodynamics data; propulsion information; and mostly through use of nondimensional geometric information.

2.1 HELICOPTER GEOMETRY

It is assumed that a typical sizing analysis starts with known payload characteristics, both in terms of payload weight and volume requirements. The volume requirements are usually reflected in length, height, and width of the constant diameter (cabin) section of the aircraft. Adding a nose and tail section of reasonable fineness ratio onto the cabin sections would complete the fuselage geometry if this were an airplane (as sized by VASCOMP II). In a helicopter, however, additional geometric characteristics must be determined before the external fuselage dimensions are completely defined.

For example, in the case of the single rotor helicopter, the total fuselage length (in addition to the nose, tail, and constant diameter sections) includes the tail boom, the length of which, in turn, is established by the tail rotor diameter and the need to maintain a reasonable gap between the main and tail rotor discs. Additionally, the tail boom length itself is affected by the relative position of the main rotor on the fuselage. Vertical tail geometry is determined both by dimensional constraints and the need to fulfill directional stability requirements (e.g., sufficient vertical tail area to counteract main rotor torque in the event of tail rotor loss). So, although the basic cabin internal dimensions are fixed, the external overall dimensions can vary widely, depending on how conflicting requirements are resolved.

In the case of the tandem rotor helicopter, not even the internal cabin dimensions are necessarily constant. For example, the need to require a certain level of external configuration compactness (by specifying a high overlap/diameter ratio) can result in overall fuselage dimensions which directly conflict with internal volume requirements.

Wing geometry may be dictated by maneuver "g" requirements, a specified wing loading or aspect ratio, or even propeller tip/fuselage clearance (in the case of a compound helicopter with wing-mounted propellers).

Primary and auxiliary independent engine nacelle size is set

by the type of engine and its size (which, in turn, is dictated by power requirements).

Figures 2-1 and 2-2 of hybrid single and tandem rotor helicopter configurations illustrate the type of information concerning the helicopter geometry which may be required of the user. Tables 2-1 and 2-2 illustrate typical values of selected geometric characteristics for various aircraft. A complete list of input geometric variables is included in Section 5.3.1.

2.2 PROPULSION SYSTEM

This program permits the use of either a single, primary propulsion system or a combination of a primary system and an auxiliary independent propulsion system. For the primary system, turboshaft cycles are always used. For the auxiliary independent system, either turboshaft, turbofan, or turbojet cycles may be used. The program includes the applicable cycles (shown in Table 2-3) from the standard library of eighty-one different generalized engine cycles developed for the VASCOMP II program. The user of the program may either select the desired engine cycle(s) from the standard library or input the characteristics of any arbitrary engine cycle he may choose.

The library engines are unrestricted in performance over their operating system range (dictated by power setting limits). However, the user, at his discretion, may include limits on engine operation by setting maximum values of fuel flow, torque, or gas generator or power turbine shaft rpm. In addition, nonlinear scaling effects of real engines may be included by input of Reynolds number-based correction factors. Degradation in performance of turboshaft engines operating at nonoptimum power turbine speed will be calculated by the program at the option of the user. The library engine cycles may thus be used with no additional input; or, by appropriate additional input, may be made to include the effects of multiple operating restrictions and other factors characteristic of real engine cycles.

During a sizing calculation, the engine cycles may be "scaled" or fixed in size. That is, if the user desires, the program will calculate the engine size required to meet the mission requirements; or, alternatively, he may input engines of specified size. In the case of helicopters employing multiple propulsion systems, the primary system may be sized to provide power to the main rotor(s) for producing lift and part of the total propulsive thrust required; and the auxiliary independent system will be sized to provide the remaining propulsive thrust or power.

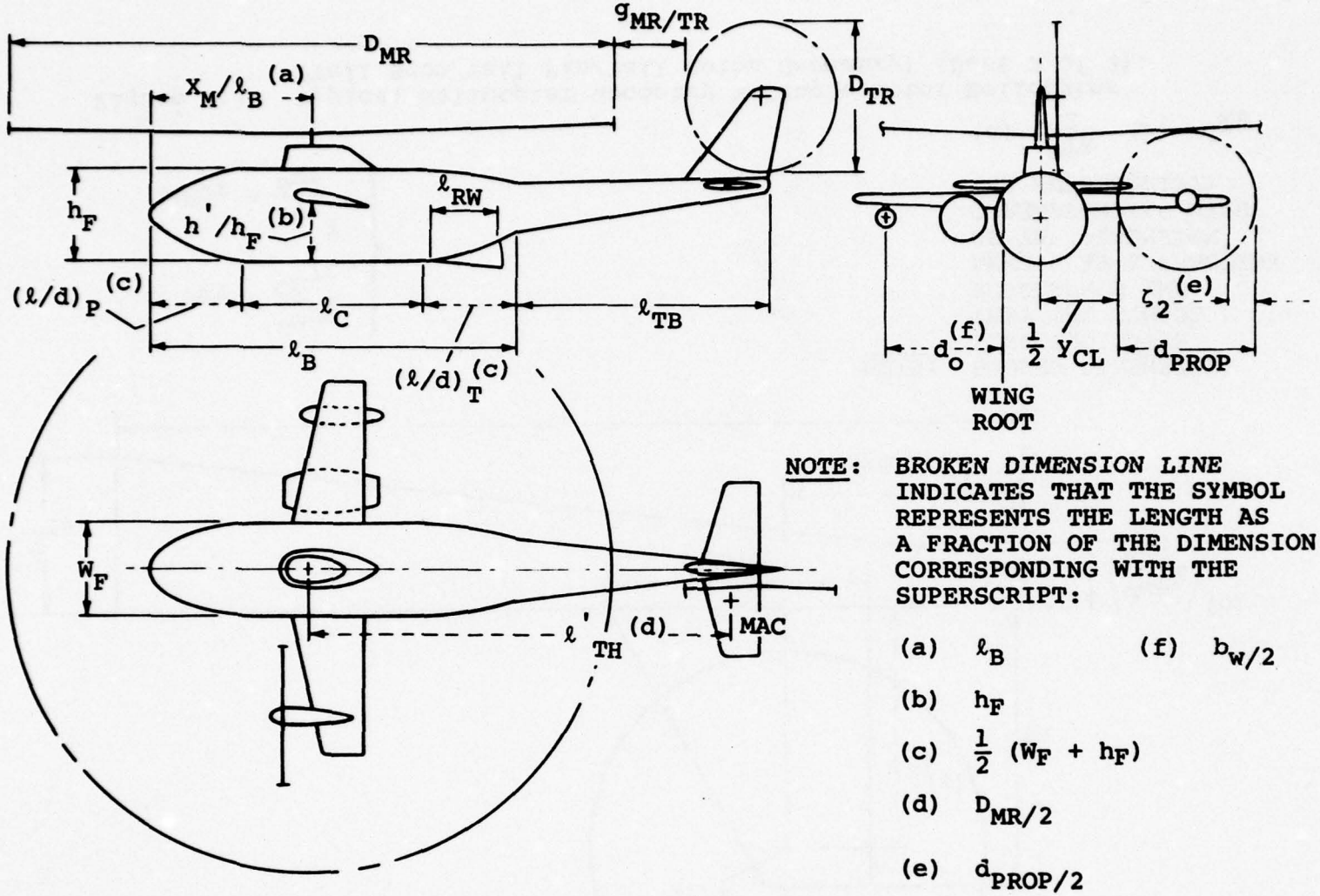

NOTE: BROKEN DIMENSION LINE INDICATES THAT THE SYMBOL REPRESENTS THE LENGTH AS A FRACTION OF THE DIMENSION CORRESPONDING WITH THE SUPERSCRIPT:

(a) ℓ_B (f) $b_{w/2}$

(b) h_F

(c) $\frac{1}{2}$ $(W_F + h_F)$

(d) $D_{MR/2}$

(e) $d_{PROP/2}$

Figure 2-1. Typical Helicopter Geometry ∿ Single Rotor Helicopter (Part 1 of 2).

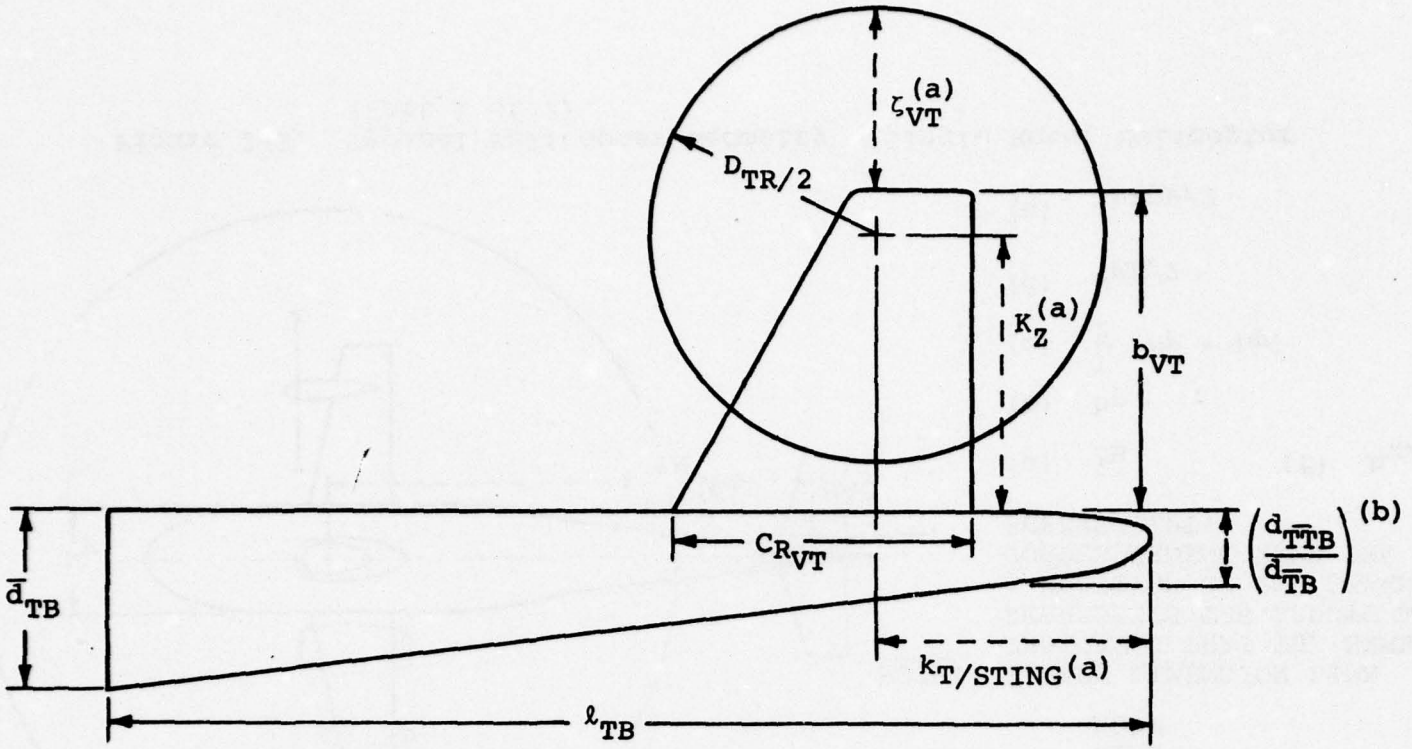

$$\left.\begin{aligned} \lambda_{VT} &= \frac{C_{T_{VT}}}{C_{R_{VT}}} \\ AR_{VT} &= \frac{b_{VT}^2}{S_{VT}} \end{aligned}\right\}$$

NOTE: BROKEN DIMENSION LINE INDICATES THAT THE SYMBOL REPRESENTS THE LENGTH AS A FRACTION OF THE DIMENSION CORRESPONDING WITH THE SUPERSCRIPT:

(a) $\frac{D_{TR}}{2}$ (b) $d_{\overline{TB}}$

Figure 2-1. Typical Helicopter Geometry ∿ Single Rotor Helicopter (Tail Boom/Tail Fin/Tail Rotor Geometry) (Part 2 of 2).

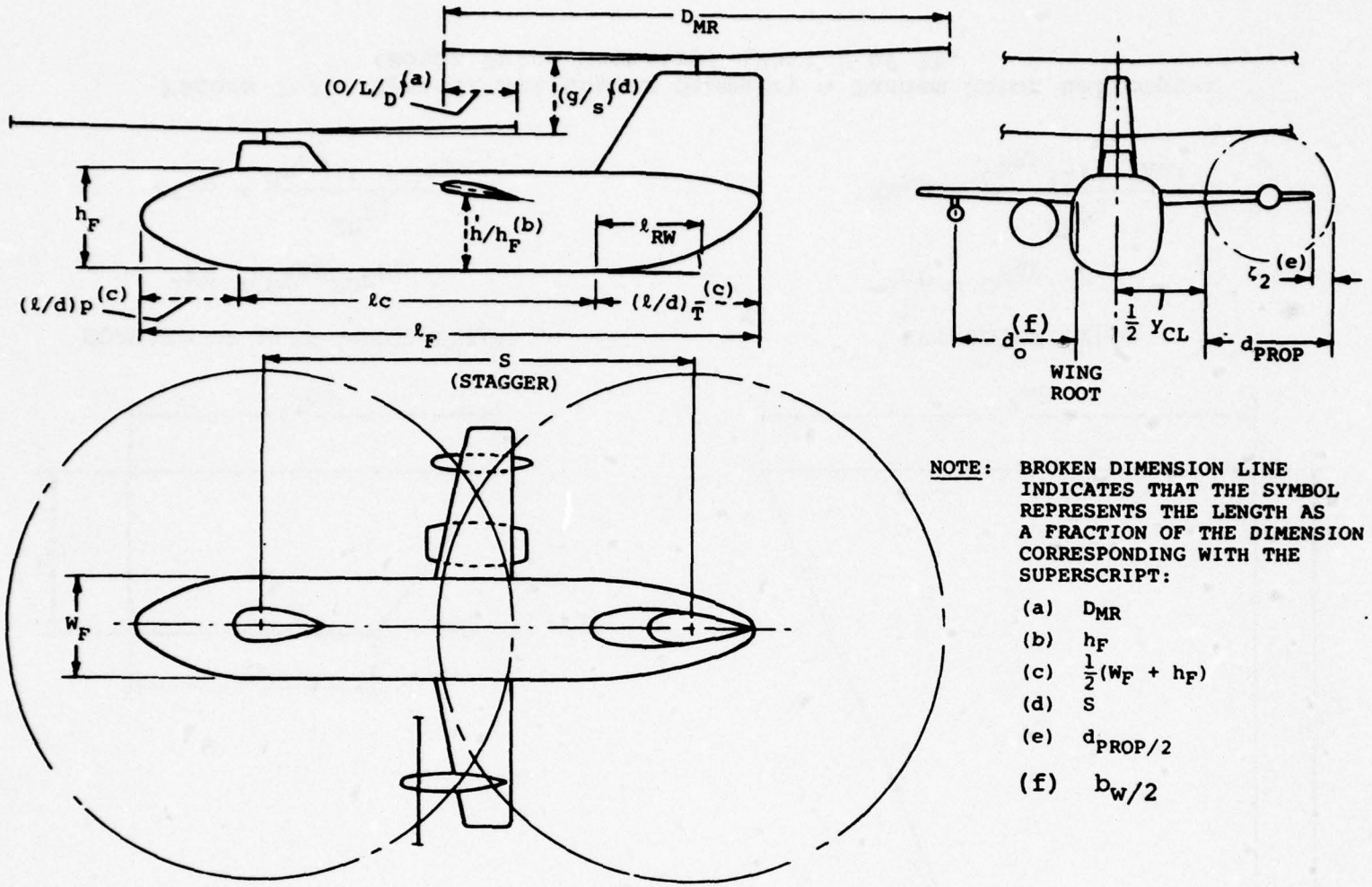

NOTE: BROKEN DIMENSION LINE INDICATES THAT THE SYMBOL REPRESENTS THE LENGTH AS A FRACTION OF THE DIMENSION CORRESPONDING WITH THE SUPERSCRIPT:

(a) D_{MR}

(b) h_F

(c) $\frac{1}{2}(W_F + h_F)$

(d) S

(e) $d_{PROP/2}$

(f) $b_{W/2}$

Figure 2-2. Typical Helicopter Geometry ∿ Tandem Rotor Helicopter (Part 1 of 2).

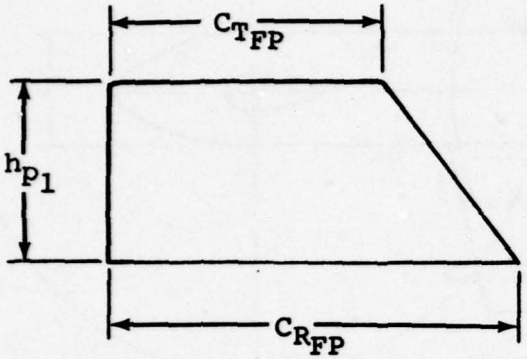

FORWARD OR MAIN ROTOR PYLON

$$\lambda_{FP} = C_{T_{FP}}/C_{R_{FP}}$$

$$AR_{FP} = \frac{2h_{p_1}}{C_{R_{FP}}(1 + \lambda_{FP})}$$

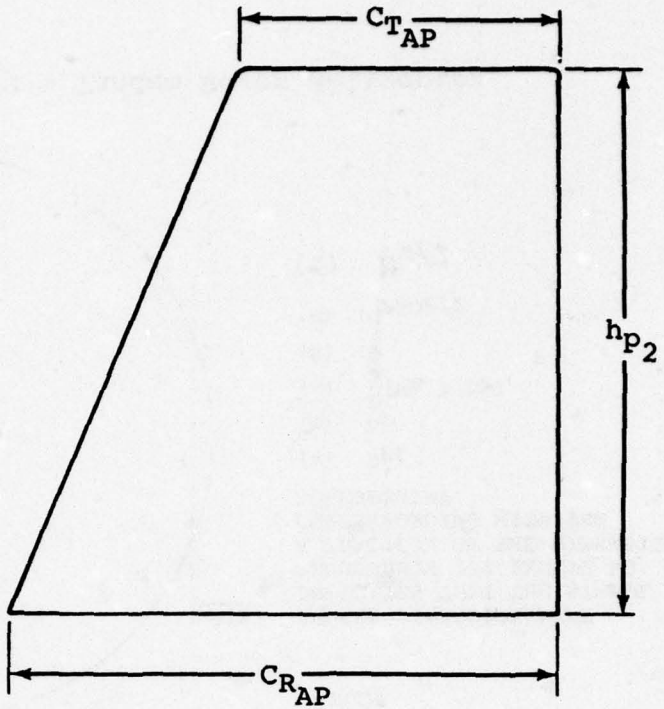

AFT ROTOR PYLON

$$\lambda_{AP} = C_{T_{AP}}/C_{R_{AP}}$$

$$AR_{AP} = \frac{2h_{p_2}}{C_{R_{AP}}(1 + \lambda_{AP})}$$

Figure 2-2. Typical Helicopter Geometry ∿ Tandem Rotor Helicopter (Rotor Pylon Geometry) (Part 2 of 2).

TABLE 2-1. TYPICAL GEOMETRIC CHARACTERISTICS - SINGLE ROTOR HELICOPTERS

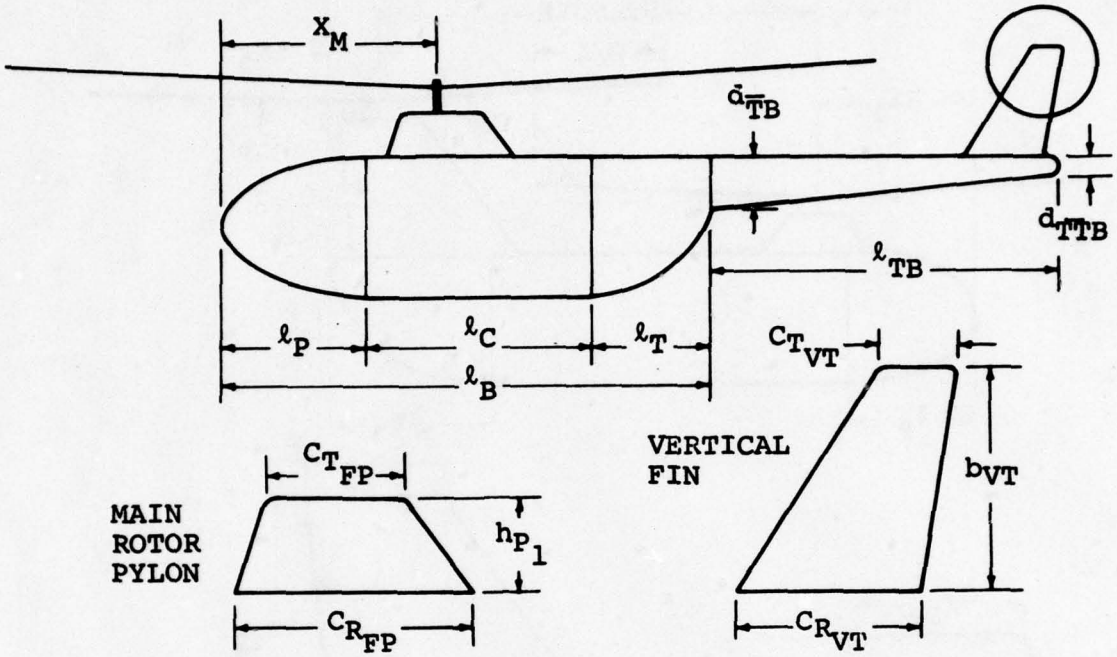

$$\lambda_{FP} = \frac{C_{T_{FP}}}{C_{R_{FP}}} \qquad \lambda_{VT} = \frac{C_{T_{VT}}}{C_{R_{VT}}}$$

$$AR_{FP} = \frac{h_{P_1}^2}{S_{FP}} \qquad AR_{VT} = \frac{b_{VT}^2}{S_{VT}}$$

S_{FP} = Planform area $\qquad d_{\overline{F}} = \frac{W_F + h_F}{2} \qquad S_{VT}$ = Planform area

DATA

TYPE	AIRCRAFT	$\ell_P/d_{\overline{F}}$	ℓ_T/d_F	X_M/ℓ_B	$\ell_{TB}/d_{\overline{TB}}$	$d_{T\overline{TB}}/d_{T\overline{B}}$	λ_{FP}	AR_{FP}	λ_{VT}	AR_{VT}
"PURE LIGHT HELICOPTERS	BOE BO-105	1.02	.75	.57	7.00	.69	.41	.30	.33	1.37
	BELL OH-58A	1.12	.71	.55	8.50	.35	.53	.15	.64	4.37
"PURE" LT. TRANSPORT HEL.	BELL UH-1B	.84	.77	.71	5.55	.32	.88	.12	.23	1.98
"PURE" MEDIUM TRANSPORT HELICOPTERS	SIK H-34A	.52	.67	.44	2.42	.42	.44	.22	.64	.96
	SIK CH-3C	.78	1.13	.44	4.45	.64	.83	.25	.75	1.72
	SIK CH-53A	.76	1.47	.42	4.38	.94	.74	.21	.62	2.14
	SIK H-37A	.60	-	.56	2.30	.47	.45	.23	.63	3.36
WINGED HELICOPTERS	BELL AH-1G	2.47	.44	.65	4.91	.42	.70	.27	.48	1.53
	SIK S-67	2.22	1.98	.62	4.17	.47	.83	.27	.48	1.90
COMPOUND HELICOPTERS	LOCK XH-51A	1.29	.98	.48	5.92	.26	.89	.33	.60	.73
	LOCK AH-56A	1.40	1.36	.62	4.43	.52	.77	.12	.46	1.29

TABLE 2-2. TYPICAL GEOMETRIC CHARACTERISTICS TANDEM ROTOR HELICOPTERS

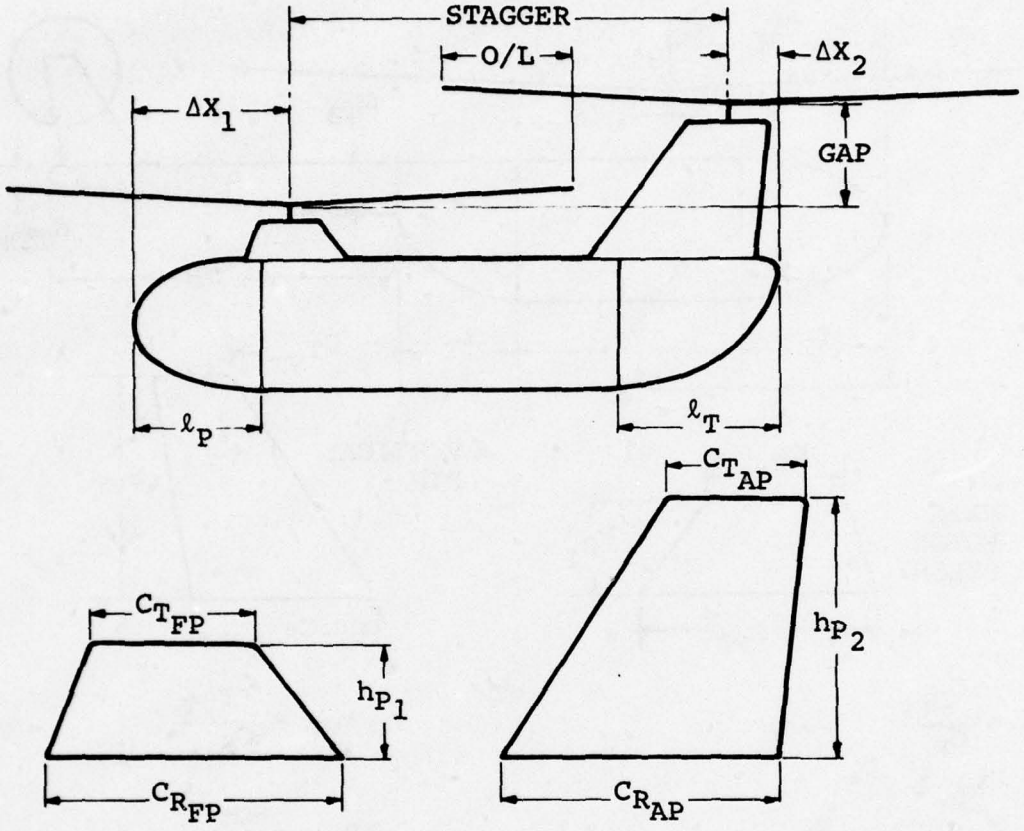

$$\lambda_{FP} = \frac{C_{T_{FP}}}{C_{R_{FP}}} \qquad \lambda_{AP} = \frac{C_{T_{AP}}}{C_{R_{AP}}}$$

$$AR_{FP} = \frac{h_{P_1}{}^2}{S_{FP}} \qquad AR_{AP} = \frac{h_{P_2}{}^2}{S_{AP}}$$

S_{FP} = planform area $\qquad d_F = \frac{W_F + h_F}{2} \qquad S_{AP}$ = planform area

TYPE	AIRCRAFT	ℓ_P/d_F	ℓ_T/d_F	$\frac{O/L}{D}$	GAP/STAG	$\Delta X_1/\ell_P$	$\Delta X_2/\ell_T$	λ_{FP}	AR_{FP}	λ_{AP}	AR_{AP}
"PURE" LIGHT TRANSPORT HELICOPTER	B-V HUP-1	.73	1.03	.37	.08	1.00	1.00	.38	.35	.57	.78
	B-V H-21	.64	2.19	.04	.00	.89	.02	.35	.45	.23	.43
"PURE" MEDIUM - HEAVY TRANSPORT HELICOPTERS	B-V CH-46A	.71	1.53	.33	.07	1.16	.51	.63	.34	.69	.61
	B-V CH-47C	.69	1.29	.34	.12	.85	.59	1.00	1.10	.81	.53
	B-V YH-16A	.84	1.81	.37	.16	.48	.84	.34	.25	.58	.84
	B-V MOD 347	.85	1.37	.23	.15	.73	.55	.98	.43	.84	.66

TABLE 2-3. LIST OF ENGINE CYCLES

	1970	Intermediate	1980
Primary Propulsion			
Turboshaft			
Engine press. ratio	13, 16	13, 16, 19	13, 16, 19, 22
Turb. inlet temp.	2600°R	2900°R	3200°R
Auxiliary Independent Propulsion			
Turboshaft			
Engine press. ratio	13, 16	13, 16, 19	13, 16, 19, 22
Turb. inlet temp.	2600°R	2900°F	3200°R
Turbojet			
Engine press. ratio	13, 16	13, 16, 19	13, 16, 19, 22
Turb. inlet temp.	2600°F	2900°	3200°R
Turbofan			
Engine press. ratio	16, 20	16, 20, 24	16, 20, 24, 28
Turb. inlet temp.	2600°R	2900°R	3200°R
Fan bypass ratio	2, 4, 6	2, 4, 6	2, 4, 6

2.3 HELICOPTER WEIGHT SUMMARY

A detailed helicopter weight summary is provided by the program through use of statistical weight trend equations. A description of, and justification for, these equations is given in Section 4.11. Three major categories of weights are calculated: the propulsion group, the structures group, and the flight controls group.

2.4 AERODYNAMIC CHARACTERISTICS

The aerodynamic data which are calculated by the program are the helicopter drag and (in the case of winged or compound helicopters) the lift curve slope of the wing (used for calculations of the gust load factor). Drag data may be input to the program in a variety of forms including a single point value of flat plate area, drag trends, or by a detailed drag summary. Scaling effects on drag based upon Reynolds number corrections are included. Wing spanwise loading efficiency (Oswald's factor) may be either input to the program or may be program calculated.

2.5 ROTOR CHARACTERISTICS

Rotor performance may be calculated either by the short form aerodynamic performance method or by using input rotor maps. The short form method employs input rotor "cycles". Corrections for the specific rotor and helicopter configuration geometry,(e.g., blade twist, number, cut-out, rotor overlap, etc.) being analyzed are made by the program. Included with the program is a brief library of currently available "cycles" (Table 2-4 lists their pertinent characteristics).

Two types of rotor maps, differing in the type and format of the input data required, may be used. These are designated as Type I and Type II rotor maps and their differences are noted in Section 3.1.5. The Type I rotor map may be used in two ways. In the first case, isolated rotor data derived for a specific rotor configuration is input and, as in the short form method, blade and configuration geometry corrections are applied by the program. In the second approach, a rotor map generated from total configuration rotor power data (e.g. in the case of a single rotor helicopter, this would be the sum of main and tail rotor power) is input. No corrections are applied. Thus, the particular blade and helicopter configuration geometry inherent in the data from which the map is generated is reflected unchanged in the calculated rotor performance. The Type II rotor map may be used, however, only as outlined in the first approach noted above.

TABLE 2-4. LIST OF ROTOR CYCLES

Rotor Cycle No.	Rotor Blade Planform Char.	Rotor Blade Airfoil Section Description	Rotor Blade Spanwise Airfoil Distr. Represented in Rotor Cycle	Helicopters Employing This Rotor Blade Type
1	Constant Chord	"Conventional" symmetrical NACA airfoil section	NACA 0012 from C.L.$_{ROT}$ to blade tip	CH-47A UH-1B SH-3A
2	Constant Chord	Cambered blade section developed by modification of NACA 230 (5 digit) series airfoil section	BV 23010-1.58 from C.L.$_{ROT}$ to blade tip	CH-47C MOD. 347 BO-105C
3	Constant Chord	High speed (transonic) airfoil section (s) developed from NACA 6 - series airfoil sections and optimized for maximum lift and low pitching moments.	BV VR-7 from C.L.$_{ROT}$ to r/R = 0.85 BV VR-8 at blade tip (r/R = 1.00)	HLH (XCH-62)

3.0 PROGRAM OPERATION

3.1 GENERAL

3.1.1 The Option Indicator

As previously described, the program has two major options and a third which is a combination of these two. The specific option to be used is selected by means of an input "option indicator" abbreviated OPTIND.

OPTIND = 1

This is an iterative routine which determines the aircraft weight, dimensions, and required power to satisfy a prescribed mission flight profile. In addition to the flight profile, certain characteristics describing the type of aircraft are specified, such as the wing aspect ratio, thickness ratio, the wing loading or disc loading, the engine cycle, etc.

OPTIND = 2 or 3

These options are used to calculate the flight performance of an aircraft for which the size is fixed. In addition to the aircraft characteristics described above, the power available, aircraft dimensions, etc. are input to the program. A flight profile is also specified. The program then calculates the performance history of the aircraft for the specified mission.

If OPTIND = 2 is selected, the aircraft gross weight is input and the fuel required to fly the specified mission is determined. This option is useful for solving many different performance problems where it is desired to constrain gross weight, such as calculating climb performance, cruise performance, or payload-range capability.

If OPTIND = 3 is selected, the operating-weight-empty is input and takeoff gross weight and required fuel load is determined. This option is useful for calculating various overload off-design weights and for determining ferry performance.

Combined Option

This option permits the user to size an aircraft for a "design-point" mission and then to calculate the off-design-point performance of the sized aircraft for a variety of additional missions. Basically, this option causes the program to run option number one (OPTIND = 1), save the sizing data generated in that option, and then input this information into the performance option (OPTIND = 2).

3.1.2 Description of Mission Profile

The performance calculation subprogram in HESCOMP, consisting of nine individual subroutines, permits the simulation of aircraft performance for virtually any mission flight profile. A typical performance analysis is made up of a series of elements which, in building block fashion, allows the user of the program to perform a wide variety of studies. The elements of a typical performance analysis are:

1. Segment - A segment of a mission profile is a unique portion of the mission such as a cruise or a climb. A segment starts with a set of initial conditions of one or more of the variables of state (altitude, range, weight, etc.) and ends when a terminal condition (or conditions) has been satisfied.

2. Hop - A hop is defined as a set of segments ending at some logical terminal locations (such as ground level at the desired range). Thus, a hop might consist of flying from location "A" to location "B" by means of combining the following segments: taxi, takeoff, climb, cruise, descent, landing, and taxi.

3. Leg - A leg of a mission is herein defined as a set of hops ending in a re-fueling of the aircraft. Thus, a leg might consist of flying from location "A" to "B", then to "C", at which point the aircraft is refueled.

4. Mission - A mission is defined in this program as a set of legs (or hops or segments) which satisfy some specific operational requirement. In this program, the mission is the basic element for which the aircraft is sized.

5. Case - A case is a consecutive series of missions for the same aircraft. This program permits the user to analyze a case which consists of a mission for which an aircraft is sized, followed by a different mission which the now-sized aircraft performs, followed by yet additional missions.

The performance calculations subprogram consists of nine individual performance segments, specified by means of an input indicator, SGTIND. The segments are taxi (SGTIND = 1), hover (SGTIND = 2), climb (SGTIND = 3), cruise (SGTIND = 4), descent (SGTIND = 5), loiter (SGTIND = 6), an increment in weight of fuel (SGTIND = 7) or payload (SGTIND = 8), and a transfer of altitude (SGTIND = 9). The end of the mission is specified by an input SGTIND = 0. An array of segment indicators is input to the program to specify the mission being studied. Thus, a typical array might be:

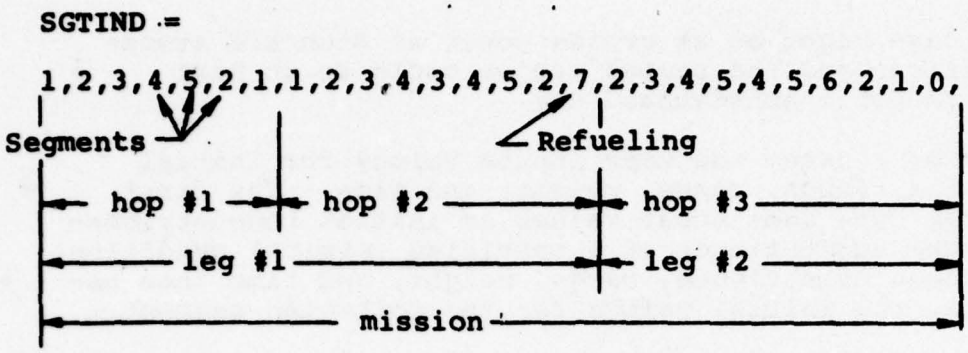

At the end of any leg, the sum of segment fuel required to perform that leg is stored in the computer. At the end of the mission, the largest of these stored values is used to determine the aircraft sizing requirements when OPTIND = 1. An end of a case is specified by an input SGTIND = 100. Since an end-of-case is also always an end-of-mission, it is not necessary to end a case by a SGTIND = 0 followed by SGTIND = 100. SGTIND = 100 always takes precedence over SGTIND = 0. The distinction between a mission and a case is most useful when it is desired to size an aircraft for a specified mission followed by analysis of the off-design-point performance of the "sized" aircraft on other missions. As an example, with SGTIND = 1 (sizing option) the following array of SGTIND might be used:

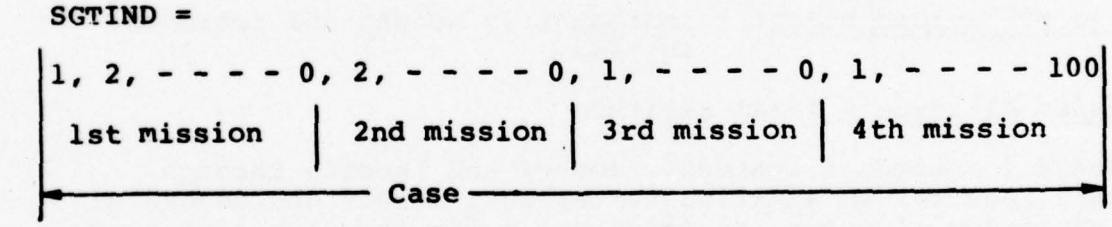

The program will size the aircraft for the first mission and then analyze the performance of the "sized" aircraft for the second, third and fourth missions. Up to 50 consecutive segments may be included in a single case, arranged in any arbitrary series of hops, legs, and missions. Up to 10 of any specific segments may be included in any case. Thus, a case might consist of several missions, each mission having several different cruise segments.

Each segment is a discrete element of the mission, independent of any other segment with the exception of the influence on the altitude, range, weight, and time. That is, the first

cruise of a case might be at cruise power at standard atmospheric conditions and the second cruise could be at best specific range for a nonstandard day.

At the start of a case, the user inputs values for initial conditions of altitude, range, weight, and time. The first segment of the case uses these values as initial boundary conditions and the segment ends at a specified terminal condition. The final values of altitude, range, weight, and time then become, in turn, the initial values for the following segment.

The final, or terminal, condition varies depending upon the segment. Terminal conditions for each segment, input by the user, are:

Taxi - increment in time

Takeoff, Hover, and Landing - increment in time

Climb - altitude at end of climb

Descent - altitude at bottom of descent and, for certain options, range at end of descent

Loiter - increment in time

Change of Fuel Weight - increment in weight and increment in time

Change of Payload Weight - increment in weight and increment in time

Transfer Altitude - final altitude

Segments 2 through 6 (takeoff, hover, and landing through loiter) require, in addition to terminal conditions on one of the variables of state, an input value for the step size to be used in the calculations. The step size specifies both the increment in the primary variable which is used in the calculations and the increment between successive printouts. Printouts occur at even integral multiples of the primary variable. Thus, if an aircraft is required to climb from a starting value of altitude of 6300 feet to a final value of 29,500 feet, and the step size is specified as 1000 feet, the program will calculate and print at 6300 feet, 7000 feet, 8000 feet, etc. to 29,500 feet. As the step size is decreased, the program accuracy improves, but the computing time lengthens.

Atmospheric conditions may vary from segment to segment. For example, the first segment, a climb, may be for a standard atmosphere; the second segment, a cruise, may use a constant increment in temperature above standard; and the third segment,

another climb, may use a nonstandard temperature versus altitude table. The third atmosphere option requires a tabular input of temperature ratio versus altitude. Only one nonstandard tabular atmosphere may be used in a single case. Segments 1 through 6 (taxi through loiter) may be used to simulate an additional requirement for reserve fuel. The reserve fuel calculated in this manner is used as part of the total fuel required to size the aircraft. However, the aircraft weight is not reduced by the amount of the reserve fuel. This option is specified by inserting a value of 10 x SGTIND for the particular mission segment indicator where reserve fuel is to be calculated. For example, if it is desired to calculate reserve fuel at a specified cruise condition, SGTIND = 40; i.e., (SGTIND = 4) x 10 is input.

3.1.3 Special Flight Path Control Option

h_{OPT}IND - This indicator will permit the user to fly a mission at the optimum altitude for best fuel consumption. The program will automatically determine the best altitude for any cruise segment which is preceded by either a climb segment or a transfer of altitude. If the cruise is preceded by a climb, the program will determine the flight altitude which minimizes the sum of the fuel for climb and cruise. If the cruise is preceded by a transfer altitude, the program will determine the altitude for the best fuel consumption during cruise only.

In addition to specifying that optimum altitude flight is desired during the mission, the user may specify a maximum altitude permitted for each cruise segment. This is specified by means of the h_{MAX} input for the preceding climb or the h_{FINAL} input for the preceding transfer altitude. The maximum altitude specification is useful in studying missions for which some of the cruise segments are to be optimized while other cruise segments are to be flown at known altitude such as the high-low-low-high mission shown below in which the low altitude segments represent sea level dashes. For this mission, the user specified h_{FINAL} = 0 for the transfer altitude segment.

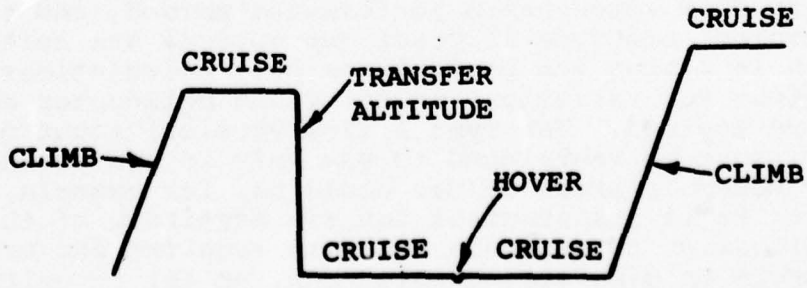

3.1.4 Propeller Efficiency

Propeller efficiency can be calculated in three different ways for compound and auxiliary propulsion helicopters. The option chosen is specified by means of a propulsive efficiency indicator, ηpIND. The options range from (a) input of a set of point values of efficiency to (b) input of a prop map table to (c) automatic calculation of propeller performance. The option chosen will depend on the type of problem being studied as each of the means of calculating prop performance has features which may be desirable under certain conditions. These options are described in more detail in Section 4.7.

3.1.5 Rotor Power Required Calculation

The method most likely to be used, and certainly the most convenient, from the point of view of inputs, is the short form aerodynamic performanc method. Rotor blade performance data is input in the form of "cycles", with corrections for the specific rotor and helicopter configuration under study being applied by the program.

Two types of rotor maps may be input. These differ in the type and format of the input data required. The Type I rotor map requires C_{P_H}/σ as a function of C_T/σ and M_{TIP} (hover performance) and C_P/σ as a function of μ, C_T'/σ, and C_X/σ (cruise performance). The Type II rotor map requires F.M. as a function of C_T/σ and M_{TIP} (hover performance) and rotor L/D_E as a function of μ, C_T'/σ, and X/L (cruise performance). The Type I rotor map data may be input in two ways. The first utilizes isolated rotor data derived for a specified rotor configuration, but corrected by the program for the specific rotor and helicopter configurations under study. The second uses total configuration rotor data (i.e., in the case of a single rotor helicopter, this would include both main and tail rotor power) and applies no corrections to the data. The Type II rotor map option always uses isolated rotor data derived for a specified rotor configuration, but corrected by the program for the specific rotor and helicopter configuration under study.

The short form aerodynamic performance method, and the Type I (1st version) and Type II rotor map options are suitable for use both in sizing and performance only calculations, since corrections for variations in rotor and helicopter configurations are applied. The Type I (2nd version) rotor map option, however, must be restricted to use only in non-sizing applications. Possible areas of use could be, for example, the case where (a) it is inconvenient for the magnitude of the particular application to generate the data required for creating a rotor cycle or generalized rotor map, or (b) in calculating the mission performance of existing helicopters (e.g. the HH-43B, WG-13, UH-2, etc.) utilizing rotor maps derived from Flight Handbooks, etc.

3.2 PROGRAM OPTIONS

Flexibility of operation and generality of approach have been accomplished by use of many optional computation paths. The path to be used is selected by the user through use of a series of input indicators. Besides the option indicator, previously described, the program indicators fall into seven categories: propulsion indicators, aerodynamics indicators, size trends indicators, mission performance indicators, flight path control indicators, an atmosphere indicator, and an optional print indicator. The indicators and their use are described below. A summary list of all indicators and their values is included in Section 5.3.2.

3.2.1 Propulsion Indicators

AIPIND - Indicator which differentiates between compounds with and without auxiliary independent engines. AIPIND = 1 denotes a compound helicopter having a single set of engines connected both to the main rotor and auxiliary propulsion systems. AIPIND = 2 indicates a compound helicopter with independent engines for auxiliary propulsion.

ENGIND - Two different classes of cruise engines are included in the program. They are "horsepower producing" engines and "thrust producing" engines. The horsepower producing engines which are included in the standard engine library are turbo-shaft engine cycles. The thurst producing engines in the engine library are either turbojet or turbofan engines. If ENGIND = 0, a power producing cycle is selected. If ENGIND = 1, a thrust producing cycle is selected.

ESCIND - The program permits the user to size the primary engines either for takeoff conditions only or for the more critical choice of takeoff or cruise. This is specified by means of the engine sizing indicator, ESCIND. If ESCIND = 1, the program will size the engines for takeoff conditions only. If ESCIND = 2, the program will size the engines for takeoff, then cross-check the engine size required for cruise conditions, and pick the more critical of the two conditions.

FIXIND - Engines selected for aircraft being studied in the program may be either "fixed" in size or "rubberized." If the engines are "rubberized," the engine sizing subroutine calculates the maximum power or thrust of the engines required to satisfy certain specified criteria. If the engines are fixed in size, the user inputs the level of maximum power or thrust for the engines and the engine sizing subroutine is bypassed. The user specifies the option of calculation by means of the input indicator, FIXIND. If FIXIND = 0, the engines are fixed in size. If FIXIND = 1, the engine sizing subroutine is used to calculate the size of the "rubberized" engines.

FIXINDI - FIXINDI serves the same function for the auxiliary independent engines that FIXIND does for the primary engines.

POWIND - This indicator specifies the limiting power setting to be used in climb, cruise, and for engine sizing at cruise conditions: maximum (POWIND = 0), military (POWIND = 1), and normal (POWIND = 2). A separate value of this indicator is input with each climb and cruise and for engine sizing.

WDTIND, QIND, N1IND, N1θIND, N2IND - These indicators specify to the program that the primary engine performance is restricted by a maximum level of fuel flow, torque, gas generator shaft rpm, gas generator referred shaft rpm, or power turbine (output) shaft rpm. An input zero value for these indicators will permit operation restricted only by power setting (turbine temperature) limits. A unity input for any of the indicators will cause the engine operation to also be restricted by a maximum level of the appropriate variable. More than one of these indicators may be set to unity at the same time, thus simulating performance of an engine operating with multiple restrictions. N2IND has a third possible value which the user may input for turboshaft engines, N2IND = 2. This input specifies that the engine is operating at a known discrete value of output shaft speed (in general, not the optimum value). If this option is used, the user inputs the level of N_{II} for each flight segment, and the program will calculate the effect on engine performance.

WDTINDI, QINDI, N1INDI, N1θINDI, N2INDI - These indicators specify to the program that the auxiliary independent engine performance is restricted by a maximum level of fuel flow, torque, gas generator shaft rpm, or power turbine (output) shaft rpm. An input zero value for these indicators will permit operation restricted only by power setting (turbine temperature) limits. A unity input for any of the indicators will cause the engine operation to also be restricted by a maximum level of the appropriate variable. More than one of these indicators may be set to unity at the same time, thus simulating performance of an engine operating with multiple restrictions. N2INDI has a third possible value which the user may input for turboshaft engines, N2INDI = 2. This input specifies that the engine is operating at a known discrete value of output shaft speed (in general, not the optimum value). If this option is used, the user inputs the level of N_{II} for each flight segment, and the program will calculate the effect on engine performance.

RNOIND - The performance of real engines is sensitive to scaling effects. That is, doubling the maximum static power of the engine at sea level for standard atmospheric conditions by increasing the physical size of the engine will not cause a corresponding doubling of the power at other operating conditions. This nonlinear behavior is due to the influence of variations in the Reynolds number at the compressor inlet. RNOIND permits these effects to be accounted for on turboshaft engines through use of an input table of a correction factor on power available. If the indicator is set to unity, the tabulated correction factor may be input and will be used by the program to account for scaling effects. A zero input for the indicator will cause the program to assume that perfect scaling occurs.

RNOINDI - This indicator serves the same purpose for the auxiliary independent engines as RNOINDI serves for the primary engines.

ROTIND - Controls the selection of the rotor performance computation method. In addition to the short form aerodynamic performance method, rotor performance may be calculated with the use of two alternate forms of rotor map. The Type I rotor map (input locations 2700→3410) requires C_{P_H}/σ as a function of C_T/σ and M_{TIP} (hover performance) and C_P/σ as a function of μ, C_T'/σ, and C_X/σ (cruise performance). The Type II rotor map (input locations 3420→4130) requires F.M. as a function of C_T/σ and M_{TIP} (hover performance) and rotor L/DE as a function of μ, C_T'/σ, and X/L (cruise performance). If ROTIND = 1, rotor performance is calculated by the short form aerodynamic performance method (requiring the input of a rotor "cycle"). If ROTIND = 2, a Type I rotor map is input with corrections being applied by the program for the specific rotor and helicopter configuration geometry being studied. If ROTIND = 3, a Type I rotor map is input, with no corrections being applied. If ROTIND = 4, a Type II rotor map is input with corrections being applied by the program for the specific rotor and helicopter configuration geometry being studied.

η_pIND - This indicator permits the user to select one of three different methods for predicting propeller performance for compound and auxiliary propulsion helicopters. If η_pIND = 0, the user can specify a set of point value efficiencies for each climb and descent and a table of efficiency versus Mach number for cruise and loiter. An input of η_pIND = 1 will permit the user to load in a propeller performance map to be used during climb, cruise, and loiter while an input of η_pIND = 2 will permit use of an automatic subroutine within the program for calculating prop performance. It is anticipated that this latter option will be used for the majority

of sizing and performance studies. The input prop map option will typically be used in cases where detailed test data is available on prop performance and it is desired to closely represent a specific propeller. The first option, permitting input of point values, is most useful for sensitivity studies or where propeller choice has not yet been made and only representative values of efficiency are desired. A more detailed discussion of these options is contained in Section 4.7.

3.2.2 Aerodynamics Indicators

DRGIND - The method of determining the total parasite drag of the helicopter is specified to the program by means of the indicator DRGIND. If DRGIND = 1, configuration parasite drag is built up in component fashion, with Reynolds number scaling. If DRGIND = 2, the parasite drag is calculated from a parasite drag trend derived from the inputs (GW/Fe) and K_{FED}.

OSWIND - The span loading efficiency factor (Oswald's efficiency factor) may be calculated by the program from an approximate relationship as a function of wing aspect ratio. If the user prefers, he may input a fixed value of the efficiency factor to the program. An input of OSWIND = 0 permits the user to input a fixed value for efficiency. An input of OSWIND = 1 will cause the program to use the approximate equation to calculate the value for efficiency.

3.2.3 Size Trends Indicators

APHIND - The aft rotor pylon height of a tandem rotor helicopter is specified by use of this indicator. If APHIND = 1, aft pylon height is input directly in feet. If APHIND = 2, the tandem rotor gap/stagger (g/s) ratio is input and aft pylon height is sized accordingly.

AUXIND - Four versions of both the single and tandem rotor helicopter may be specified through this indicator. They are: a pure helicopter (AUXIND = 1), a winged helicopter only (AUXIND = 2), an auxiliary propulsion helicopter, only (AUXIND = 3), and a compound (wings and auxiliary propulsion) helicopter (AUXIND = 4).

b_wIND - For a configuration having wings, this option determines the manner in which wing span is calculated during the sizing process. If b_wIND = 1, wing span/rotor diameter ratio (b_w/D) is input. If b_wIND = 2, wing aspect ratio (AR) is input. If b_wIND = 3 (used when dealing with wing-mounted propellers) wing span is determined from propeller tip/fuselage clearance considerations.

CNFIND - This indicator specifies the helicopter configuration to be analyzed. These are: the single rotor helicopter (CNFIND = 1) and the tandem rotor helicopter (CNFIND = 2).

FDMIND - Determines the manner is which a tandem rotor helicopter fuselage is sized. If FDMIND = 1, tandem rotor overlap ((O/L)/D) and forward and aft rotor positions ($\Delta X_1/l_p$, $\Delta X_2/l_T$) are specified. If FDMIND = 2, overlap and cabin length (l_C) are input. If FDMIND = 3, cabin length and forward and aft rotor positions are input.

HTIND - Permits the user to input fixed-size horizontal tail surfaces to the program or, optionally, to have the program calculate the tail surface size based upon an input tail "volume" coefficient. If HTIND = 0, the program will assume no horizontal tail exists. If HTIND = 1, the tail area may be input directly. If HTIND = 2, the program will calculate the size based upon a tail "volume" coefficient.

MRPIND - Specifies the placement of the main rotor of a single rotor helicopter on its fuselage. If MRPIND = 0, the user inputs directly the main rotor position (aft of the nose) as a fraction of body length (X_M/l_B). If MRPIND = 1, the program does a simple mass balance calculation and determines the rotor position relative to the aircraft cg. If MRPIND = 2, the same procedure is carried out as with MRPIND = 1 with the exception that the program assumes the auxiliary drive system, propeller, and auxiliary independent engines (if any) to be located on the wing.

RDMIND - Specifies manner in which main rotor is sized. If RDMIND = 1, main rotor diameter and solidity are input directly. If RDMIND = 2, disc loading and solidity are input, diameter is calculated. If RDMIND = 3, diameter and C_T/σ are input, solidity is calculated. If RDMIND = 4, disc loading and C_T/σ are input and both diameter and solidity are calculated.

S_WIND - Specifies options available for wing sizing. These are: wing area input directly (SWIND = 1), wing area sized based on an input wing loading (SWIND = 2), and wing area sized by rotor/wing maneuver requirements (SWIND = 3).

TRDIND - Determines manner in which tail rotor diameter is sized. If TRDIND = 0, the helicopter is sized without a tail rotor (Note: this indicator is only used in conjunction with CNFIND = 1.0). If TRDIND = 1, tail rotor diameter is calculated from a trend of D_{MR}/D_{TR} contained in the program. If TRDIND = 2, tail rotor diameter is input directly. If TRDIND = 3, a value of net tail rotor disc loading, $(T/A)_{NET}$, is input and tail rotor diameter is determined through an iterative procedure.

TRSIND - Tail rotor solidity sizing indicator. If TRSIND = 1, tail rotor solidity is input directly. If TRSIND = 2, C_T/σ is input and tail rotor solidity is sized based on either hover-antitorque or hovering turn requirements.

VTFIND - Vertical tail area sizing indicator. If VTFIND = 1, vertical tail size is based on input values of aspect ratio (AR_{VT}) and tail fin/tail rotor overlap (h_{VT}). If VTFIND = 2, tail fin/tail rotor overlap and directional stability requirements, (sufficient tail area to counteract main rotor torque in cruise flight, if tail rotor is lost), dictate vertical tail area. If VTFIND = 3, the same requirements must be met as with VTFIND = 2, with the exceptions that AR_{VT} is specified and tail fin overlap is calculated along with vertical tail area.

XMSNIND - Indicator that controls drive system transmission sizing. If XMSNIND = 0, main, tail and auxiliary drive system ratings are specified as a fraction of primary engine installed power (in the case of a compound helicopter with auxiliary independent propulsion, the auxiliary independent drive system rating is specified as a fraction of the auxiliary independent engine installed power).

If XMSNIND = 1, the drive system ratings calculated are equal to the product of the applicable multiplicative factors (SHP_{MRX}/SHP^*_{MR}, SHP_{TRX}/TRP^*, SHP_{ARX}/SHP^*_{AUX}) and the component (main tail, and auxiliary) power obtained from the proportional split (based on power required) of the total sea level standard maximum (installed) engine power.

If XMSNIND = 2, main, tail, and auxiliary drive system ratings are specified at a fraction of the power required to hover or cruise at design conditions (more critical of the two conditions is selected).

If XMSNIND = 3, the same applies as in the case where XMSNIND = 2, except the most critical of the two design conditions is compared to the drive system rating required at an alternate payload/gross weight hover at the design point conditions. The most critical of these three conditions is selected.

If XMSNIND = 4, the same applies as in the case where XMSNIND = 2, except that the tail rotor drive system rating is selected independently of the main rotor drive system to match a specified fraction of power required to hover or cruise at design conditions (more critical of the two conditions is selected).

If XMSNIND = 5, the same applies as in the case where XMSNIND = 3, except that the tail rotor drive system rating is selected independently of the main rotor drive system (as when XMSNIND = 4), and the most critical of the two design conditions is compared to the tail rotor drive system rating required at an alternate payload/gross weight hover at the design point conditions, the most critical of these three conditions being selected.

3.2.4 Mission Performance Indicators

CLMIND - Four types of climb calculations are permitted: maximum rate of climb (CLMIND = 1), constant equivalent airspeed (CLMIND = 2), constant Mach number (CLMIND = 3), and constant true airspeed (CLMIND = 4).

CRSIND - Six types of cruise missions are included in the program: cruise at fixed cruise power (CRSIND = 1), cruise at constant true airspeed (CRSIND = 2), cruise at airspeed for best specific range, (CRSIND = 3), cruise at the speed for 99% of best specific range (CRSIND = 4), cruise-climb (constant W/δ) at the speed for best specific range (CRSIND = 5), or cruise-climb at the speed for 99% of best specific range (CRSIND = 6).

DESIND - Twelve different descent paths may be calculated by the program. They are of three major types: descent at constant true airspeed (TAS) (DESIND = 1), descent at constant Mach number (DESCIND = 3). Four variations of each of these major types of descent are specified by RMAXND. It should be noted that there are no idle power or autorotative descent options available. However, depending on the descent flight conditions specified, it is possible to operate on an autorotative descent boundary (see Section 4.12.5) during a descent.

RMAXND - Used in conjunction with DESIND to specify types of descent. If RMAXND = 0, the descent flight path ends at a specified terminal range (cruise segment must be input previous to descent). If RMAXND = 1, the program checks the specified terminal range, and, if the predicted flight path will end beyond the specified terminal range value, a spiral descent path is assumed at that point; if the predicted flight path ends before reaching the specified terminal range point, the program prints "SHALLOWER DESCENT REQUIRED". If RMAXND = 2, the descent ends at a specified minimum altitude, terminal range requirement not considered. If RMAXND = 3, the fuel used and time required for descent are calculated but no range credit given (i.e., spiral descent path).

SGTIND - The mission profile flown by the aircraft may be made up of an arbitrary sequencing of nine discrete profile segments. The segment selected is specified by means of the segment indicator, SGTIND. The segments are: taxi (SGTIND = 1), takeoff, hover and landing (SGTIND = 2), climb (SGTIND = 3), cruise (SGTIND = 4), descent (SGTIND = 5) loiter (SGTIND = 6), a change of fuel weight (SGTIND = 7), a change of payload weight (SGTIND = 8), and a transfer of altitude (SGTIND = 9). By appropriate sequencing of the input values for the segment indicator, the mission profile may be made up of any arbitrary combination of these nine discrete elements. The mission is terminated by an input value for segment indicator = 0. NOTE: Segments 1 through 6 can be used for reserve fuel calculations (gross weight reset following segment) by inputing 10 times SGTIND, i.e., SGTIND = 10, 20, 30, 40, 50, or 60.

TOLIND - The indicator TOLIND is input with each takeoff, hover, and landing segment and dictates the manner in which power is calculated. If TOLIND = 1, the user inputs required thrust-to-weight ratio and vertical rate of climb ($V_{R/C}$). If TOLIND = 2, the user inputs required fractions of maximum power and vertical rate of climb (T/W ratio is computed). Both TOLIND = 1 and 2 options are calculated, based on the assumptions of hover-out-of-ground effect. If TOLIND = 3, the option is the same as 1, but the analysis includes hover-in-ground effect factors. If TOLIND = 4, the option is the same as 2, but the analysis includes hover-in-ground effect factors.

WGTIND - The change fuel and change payload segments may be used to simulate refueling, unloading or loading of passengers, or a fuel drop. There is no restriction on the amount of fuel or payload which may be removed at any point in the mission. However, during a sizing run, it would be undesirable to increase the aircraft weight (by adding fuel or payload) to a value which exceeds the initial gross weight of the aircraft. This is because the design gross weight, upon which the subsystem weights depend, is assumed to be the same as the initial gross weight at the start of the mission. During a performance run (OPTIND = 2), this restriction does not apply and the user is given the option of overloading the aircraft at any point of the mission. If WGTIND = 0, the program will not permit the maximum weight to exceed the design gross weight. This is useful if it is desired to refuel to capacity at some point in the mission. If WGTIND = 1 (and if the performance option is being run), the program will permit the aircraft weight to exceed the design gross weight. This is useful for parametric performance studies. For example, the user can specify an array of SGTIND = 7, 4, 0, 7, 4, 0, 7, 4, 0, up to 7, 4, 100. When this is done, the program will calculate the performance in cruise at a series of different aircraft weights. The "7" segment is used to increment the design gross weight to any value of weight desired for the following cruise.

3.2.5 Flight Path Control Indicators

h_{OPTIND} - By inputting $h_{OPTIND} = 1.0$, the program will automatically determine the cruise altitude for minimum fuel consumption for any cruise which is preceded by a climb or a transfer altitude. For cruise segments which are preceded by a climb, the program will find the cruise altitude for which the sum of climb fuel and cruise fuel is minimized. The user can also specify a maximum permissible altitude for each cruise segment. If $h_{OPTIND} = 0$ is input, the program will not do an optimum altitude search for the cruise segments.

3.2.6 Atmosphere Indicator

ATMIND - The atmosphere for each individual mission profile segment and for the engine sizing calculations may be either a standard or nonstandard atmosphere. Thus, the climb may be run on a nonstandard atmosphere followed by a cruise for standard day conditions. Three options, one for standard atmosphere, the other two for a nonstandard atmosphere are available. For the performance calculations, the type of atmosphere to be used is specified to the program by means of the atmosphere indicator, ATMIND. If ATMIND = 0, the program will use a standard atmosphere. ATMIND = 1 specifies a nonstandard, constant increment in temperature above standard while ATMIND = 2 specifies a nonstandard atmosphere requiring a tabular input of temperature ratio versus altitude.

3.2.7 Optional Print Indicator

Two different forms of printout are available for the mission performance data. By setting OPTIONAL PRINT INDICATOR = 0, a standard printout will occur. This consists of time, range, fuel used, aircraft weight, pressure altitude, true airspeed, primary engine turbine temperature, an engine code which specifies the condition which is dictating the primary engine operating point, and a power fraction which is the instantaneous fraction of maximum power which is being used. These data are printed for all performance segments. In addition, depending upon which segment is being used, the standard printout will include such parameters as rate of climb, equivalent airspeed, specific range, flight path angle, etc. More detailed data may be obtained by setting the OPTIONAL PRINT INDICATOR = 1.0. The data printed will then include main rotor power and tip speed, tail rotor power and tip speed, auxiliary propulsion power and propeller tip speed, primary and auxiliary engine fuel flows, etc. The printout available from the program is described in more detail in Section 6.1.4.

3.3 PROGRAM FLOW

Figure 3-1 indicates, conceptually, the operation of the program. Program flow is monitored by a general control loop which controls the operation of a series of peripheral programs. These include eighteen minor subroutines, four major subroutines, a major subprogram, and a library of engine cycle data, and rotor "cycle" data. The characteristics of these routines are summarized in Table 3-1.

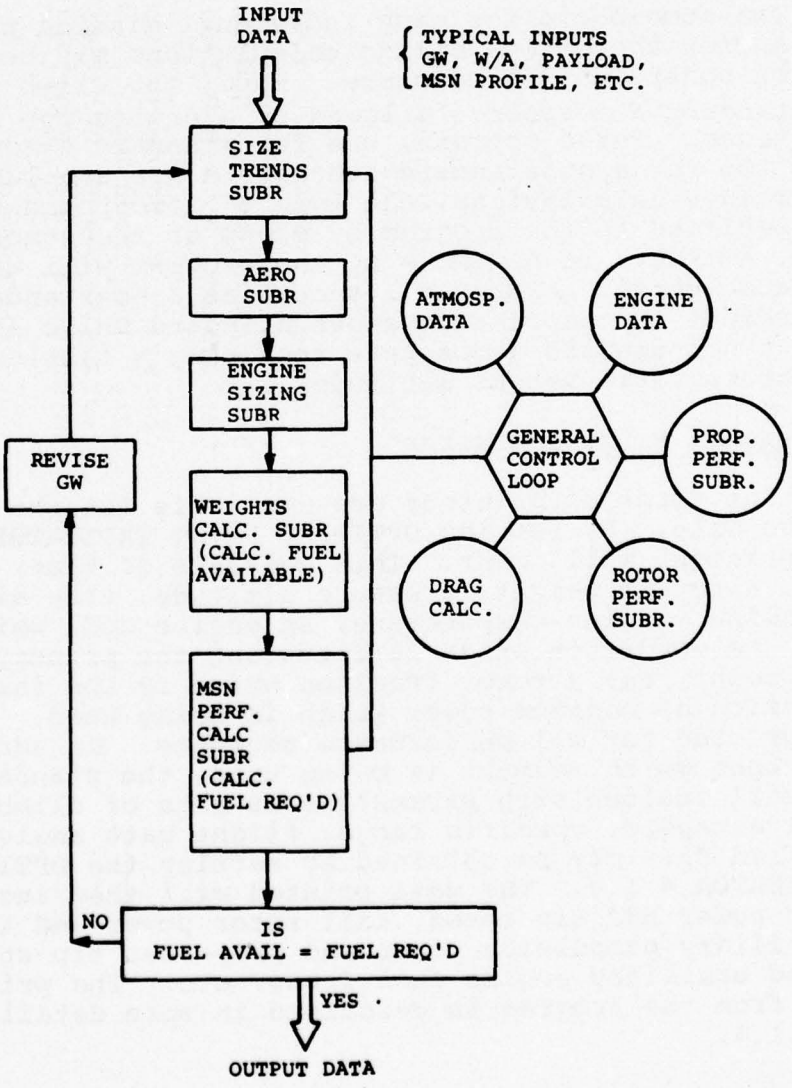

Figure 3-1. Sketch of Program Geometry.

TABLE 3-1. SUMMARY OF SUBROUTINES

ROUTINE	CALLED BY	PURPOSE
Main Control Loop (MAIN)	---	Monitors program operations, checks convergency and calculates gross weight during iterative sizing option (OPTIND = 1)
Minor Subroutines:		
Atmosphere (ATMOS)	Performance subroutines with SGTIND = 1-6, engine sizing and size trends	Calculates atmospheric density, pressure, temperature and speed of sound
DESPOW	Descent subroutine	Calculates power required for descent
Drag Calculations (DRAG)	Performance subroutines with SGTIND = 1-6, and engine sizing	Calculates aircraft propulsive force coefficient (C_X)
POWAVL	Performance subroutines with SGTIND = 1-6, engine sizing and size trends	Calculates power and fuel flow available for primary turboshaft engines by determining the most critical operating restrictions
POWAVI	Same as POWAVL	Calculates power and fuel flow available for auxiliary independent turboshaft engines by determining the most critical operation restrictions
POWREQ	Same as POWAVL	Calculates fuel flow for primary turboshaft engines when power required is less than power available.

TABLE 3-1. CONTINUED

ROUTINE	CALLED BY	PURPOSE
POWRQI	Same as POWAVI	Calculates fuel flow for auxiliary independent turboshaft when power required is less than power available
ENG1	POWREQ, POWAVL	Calculates power available for primary turboshaft engines at any specified turbine temperature, including effects of Reynold's number and operation at nonoptimum N_{II}
ENG1I	POWRQI, POWAVI	Calculates power available for auxiliary independent turboshaft engines at any specified turbine temperature, including effects of Reynold's number and operation at nonoptimum N_{II}
THRAVL	Same as POWAVL	Calculates thrust and fuel flow available for turbofan and turbojet engines by determining most critical operating restriction
THRREQ	Same as POWAVL	Calculates fuel flow for turbofan and turbojet engines when thrust required is less than thrust available
POWER	Performance Subroutines with SGTIND = 3,4,5,6 & engine sizing and size trends	Calculates propeller power required when thrust and advance ratio are known
POWERI	Same as Power	Calculates propeller power (for auxiliary independent propulsion system) required when thrust and advance ratio are known
PRINT 1 and PRINT 2	Main subroutine	Controls printout of data generated in sizing when OPTIND = 1.0

TABLE 3-1. CONTINUED

ROUTINE	CALLED BY	PURPOSE
ROTLIM	Performance subroutines with SGTIND = 2,3,4,5&6	Checks main rotor operating conditions (C_t/σ and C_x/σ) to see if rotor limit has been exceeded.
ROTPOW	Performance subroutines with SGTIND = 2,3,4,5,6 and engine sizing and size trends	Calculates rotor power required (both main and tail rotors)
SCRIBE	Performance subroutines with SGTIND = 4 & 6	Controls printout when detailed print option is desired (OPTIONAL PRINT INDICATOR = 1.0)
THRUST	Same as POWER	Calculates propeller thrust available when power and advance ratio are known
Major Subroutines:		
Aerodynamics (AERO)	Main	Calculates wing spanwise loading efficiency and a series of coefficients which are used by the drag subroutine to calculate aircraft drag
Engine Sizing (ENGSZ)	Main	Calculates engine size (power or thrust) required to meet mission requirement
Size Trends (SIZTR)	Main	Calculates aircraft dimensions which are required for weight estimate and drag calculation
Weight Trends (WGHTR)	Main	Calculates aircraft weight summary including propulsion, structures, flight controls and fuel available

TABLE 3-1. CONTINUED

ROUTINE	CALLED BY	PURPOSE
Major Subprogram:		
Performance Calculations (PRFRM)	Main	Monitors program flow during calculation of mission performance and calculates total fuel required at end of mission
Performance Subroutines		
Taxi (TAXI)	Performance subprogram	Calculates taxi performance
Takeoff, Hover & Landing (TOHL)	Performance subprogram	Calculates takeoff, hover or landing performance
Climb (CLIMB)	Performance subprogram	Calculates climb performance
Cruise (CRUS1, 2, 3)	Performance subprogram	Calculates cruise performance
Descent (DSCNT)	Performance subprogram	Calculates descent performance
Loiter (LOITR)	Performance subprogram	Calculates loiter performance
Change Fuel Weight (CHGFW)	Performance subprogram	Adds or subtracts fuel to aircraft
Change Payload (CHGPL)	Performance subprogram	Adds or subtracts payload to aircraft
Transfer Altitude (TRALT)	Performance subprogram	Changes altitude

4.0 DETAILED PROGRAM DESCRIPTION

4.1 MAIN CONTROL LOOP

Figure 4-1 is a flow chart of the main control loop for the computer program. In the sizing option (OPTIND = 1), the program iterates on the aircraft gross weight until the fuel available and the fuel required are equivalent within a specified tolerance. If OPTIND = 2 or 3, the program bypasses the size trends, engine sizing, and weight trends subroutines. If OPTIND = 3, the program iterates to determine the takeoff weight and fuel required to fly a specified mission.

4.1.1 Input Card Setup

The first five columns of an input card contains information used by the input routine LOADER. A card with 77777 punched in the first five columns indicates a title card follows. The following card is an alpha-numeric title card with information in columns seven through seventy-eight as shown on the input sheets in the User's Manual. All input data are assigned a unique location in the input data file. This is indicated by the location number of each variable on the input sheets in the User's Manual. Up to five variables may be input on a card. Columns 1 through 4 contain the location number of the first variable on the card and column five the number of variables on the card. A card with 88888 punched in the first five columns indicates the end of data for that case and starts program execution. A card with 99999 in the first five columns indicates the end of the run and causes program termination. Cases can be stacked in the following manner.

```
77777     Card
          Title Card
          Data Cards
88888     Card
77777     Card
          Title Card
          New Data Cards
88888     Card
99999     Card
```

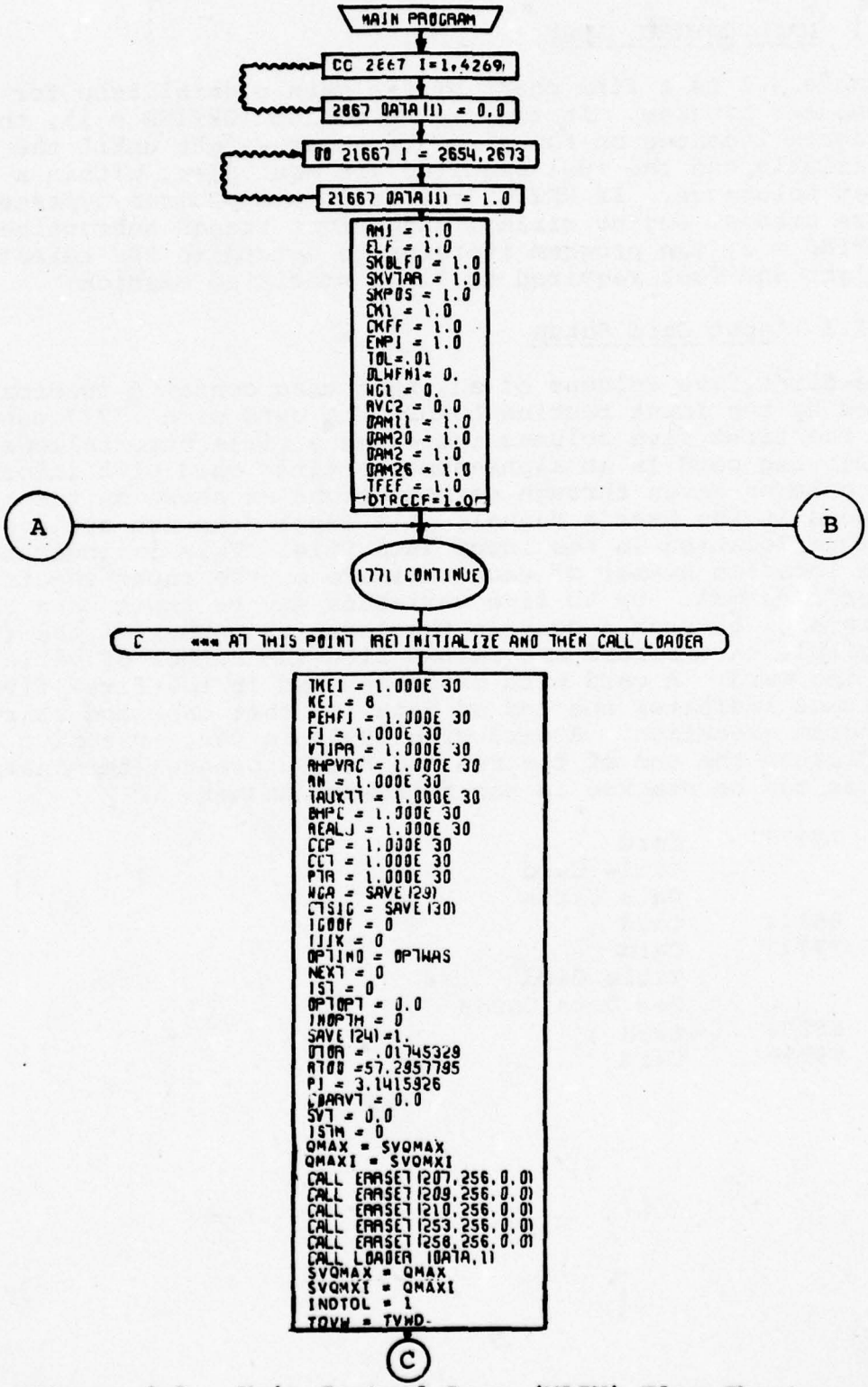

Figure 4-1. Main Control Loop (MAIN) Flow Chart (Part 1 of 13).

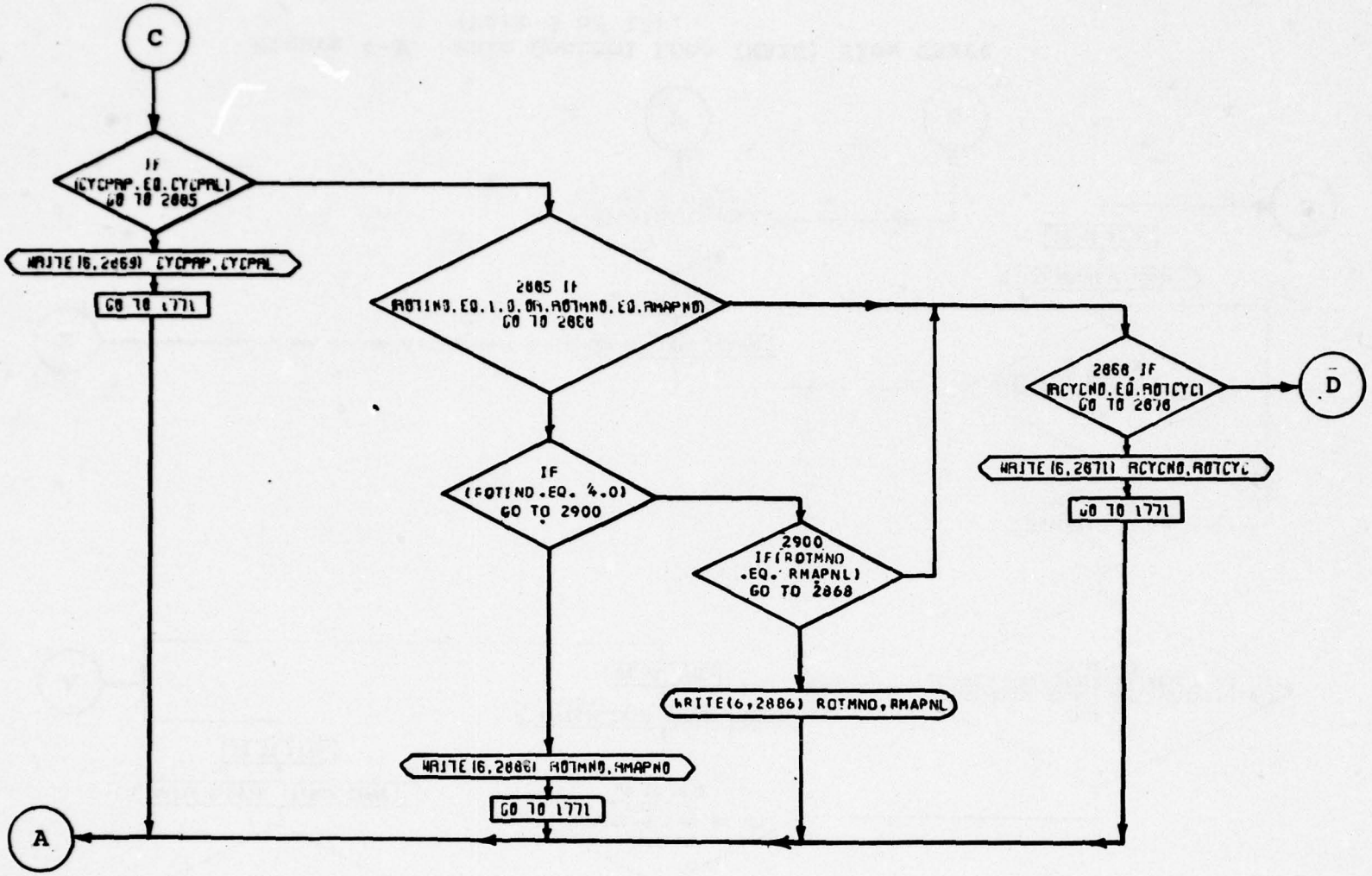

Figure 4-1. Main Control Loop (MAIN) Flow Chart (Part 2 of 13).

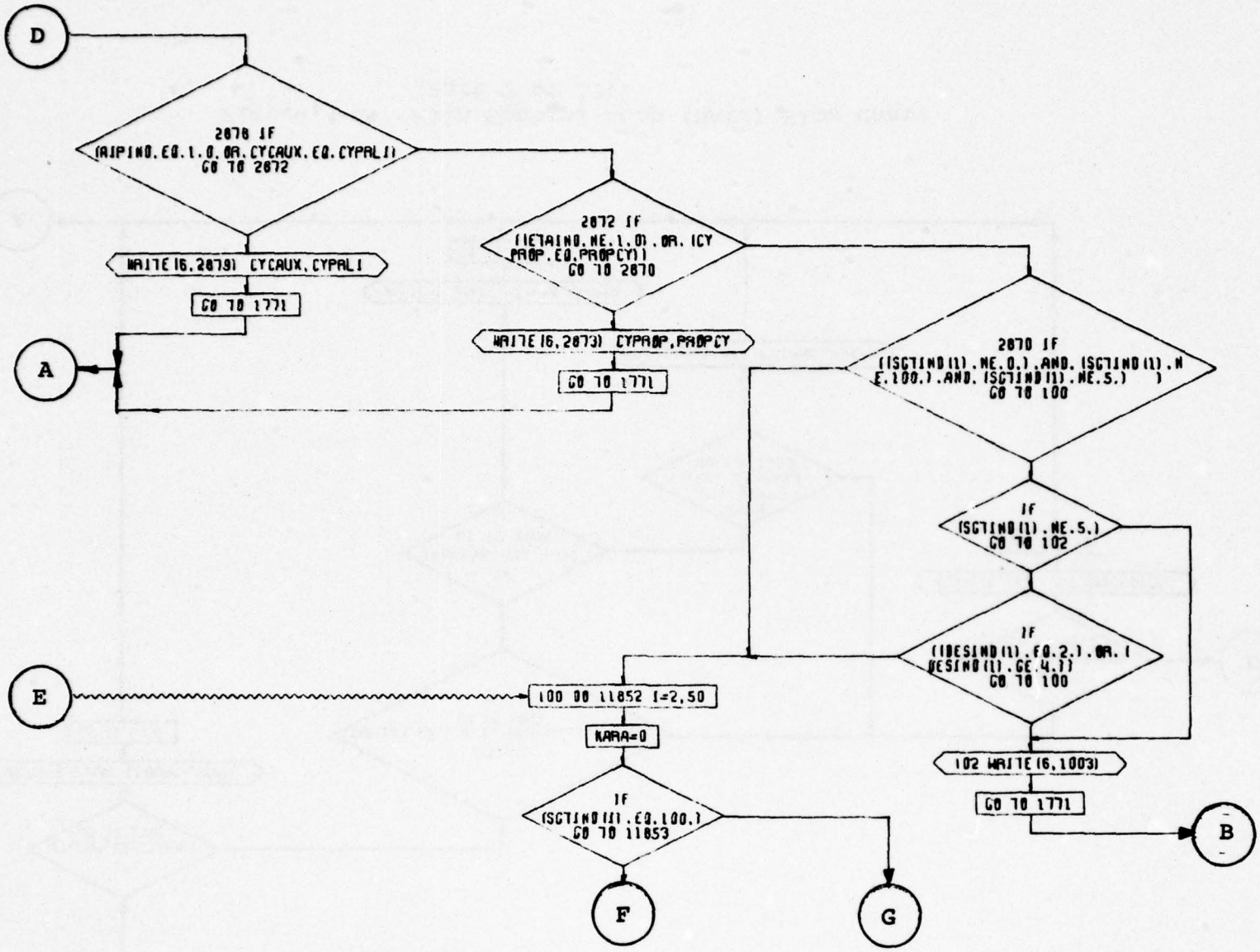

Figure 4-1. Main Control Loop (MAIN) Flow Chart (Part 3 of 13).

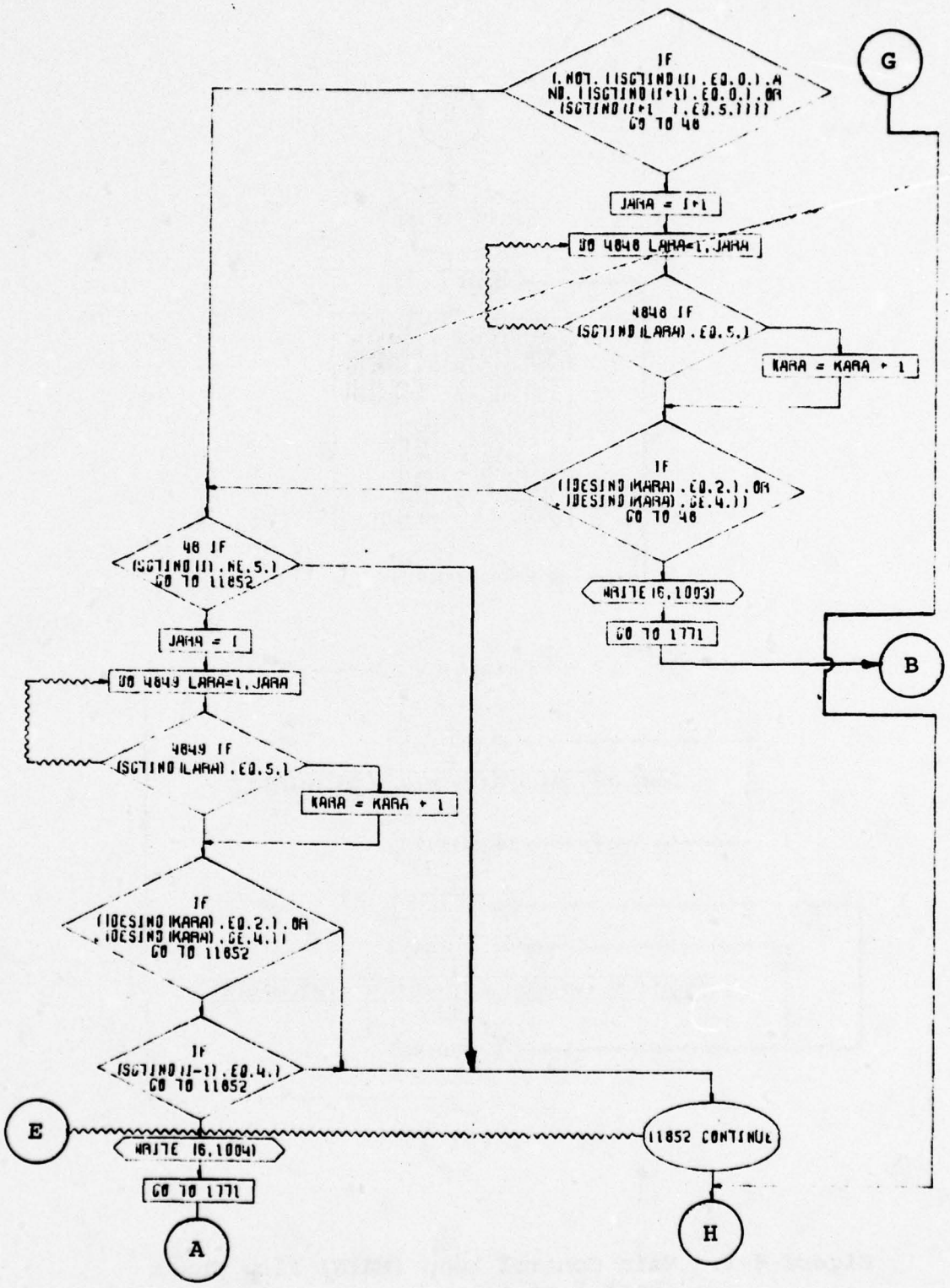

Figure 4-1. Main Control Loop (MAIN) Flow Chart (Part 4 of 13).

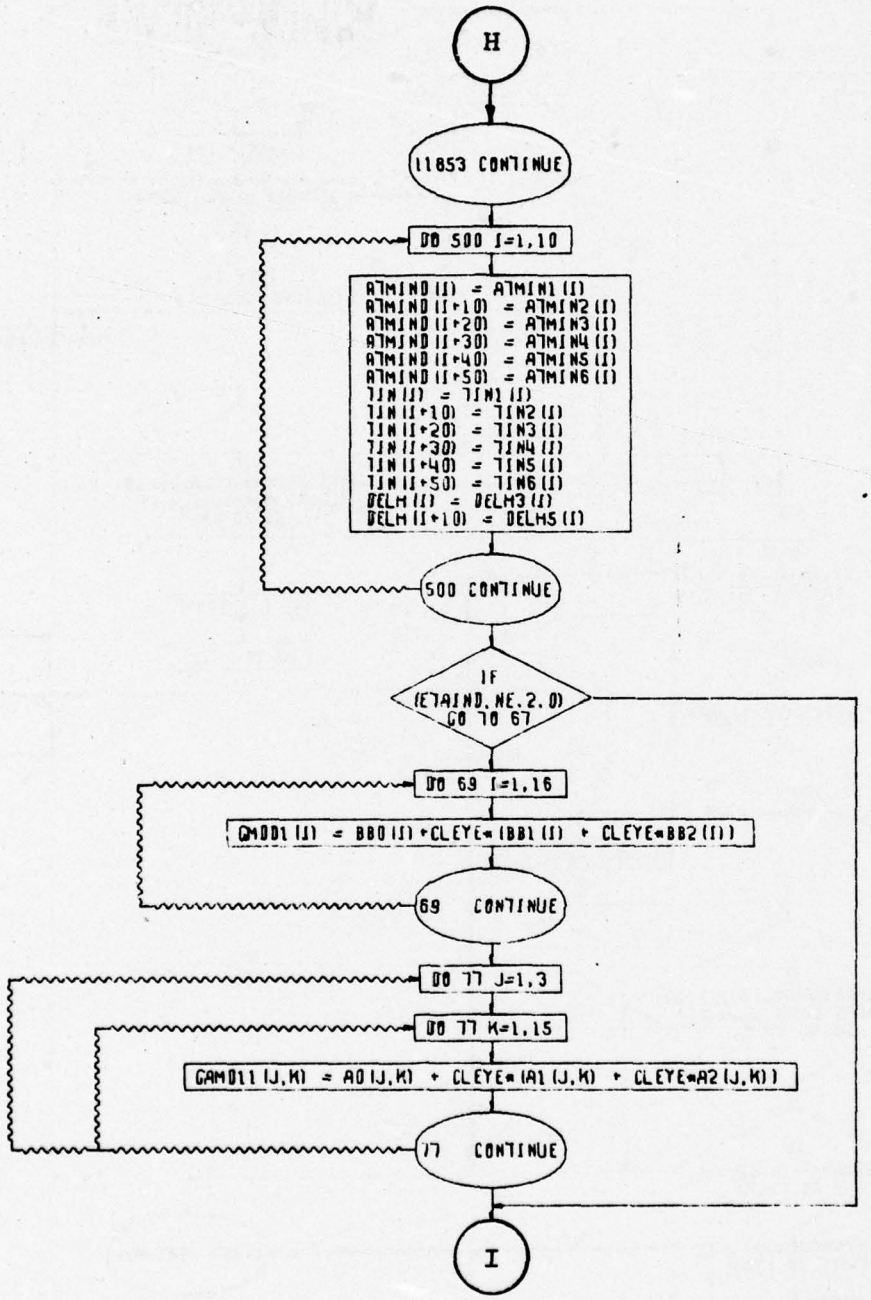

Figure 4-1. Main Control Loop (MAIN) Flow Chart (Part 5 of 13).

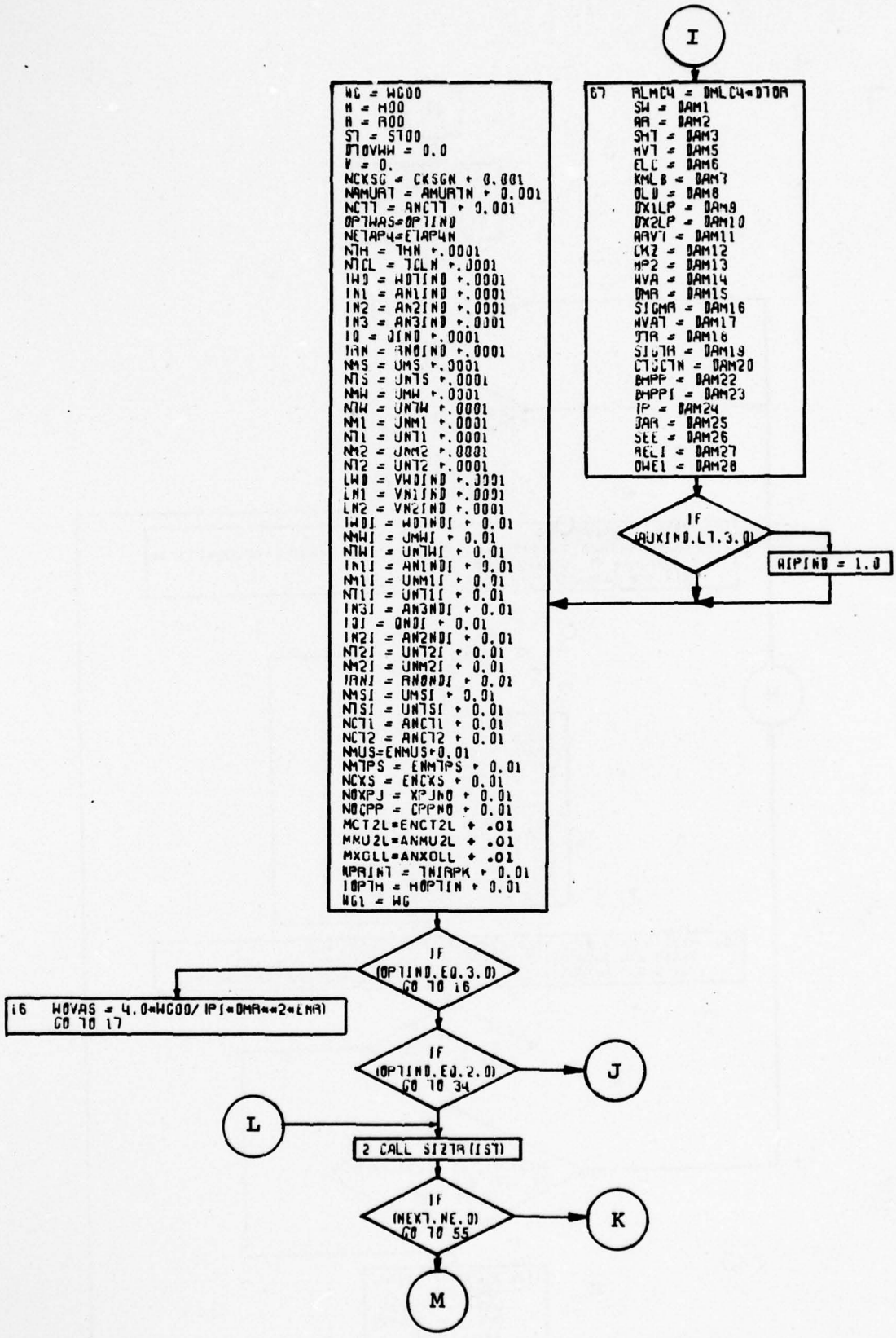

Figure 4-1. Main Control Loop (MAIN) Flow Chart (Part 6 of 13).

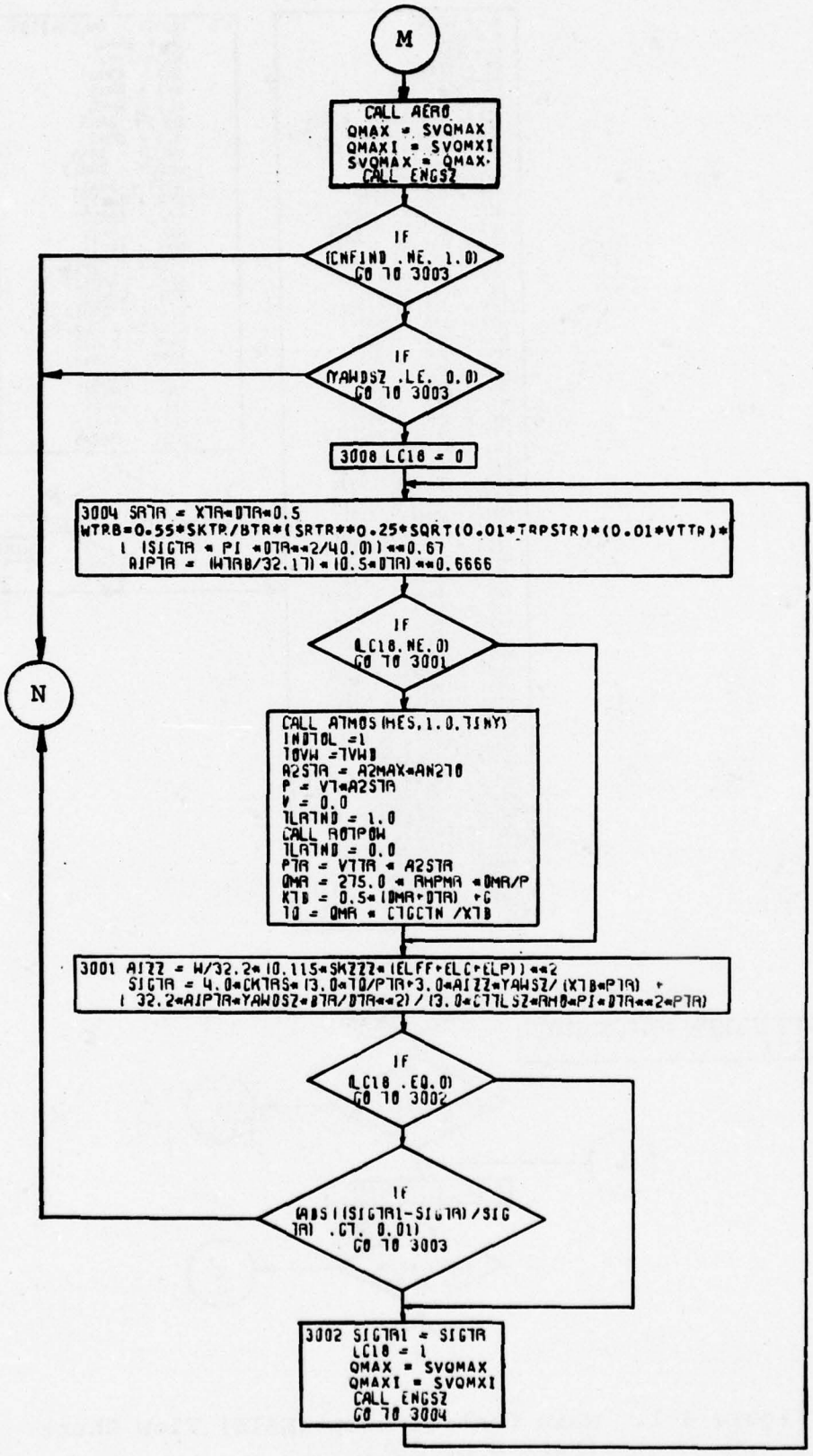

Figure 4-1. Main Control Loop (MAIN) Flow Chart (Part 7 of 13).

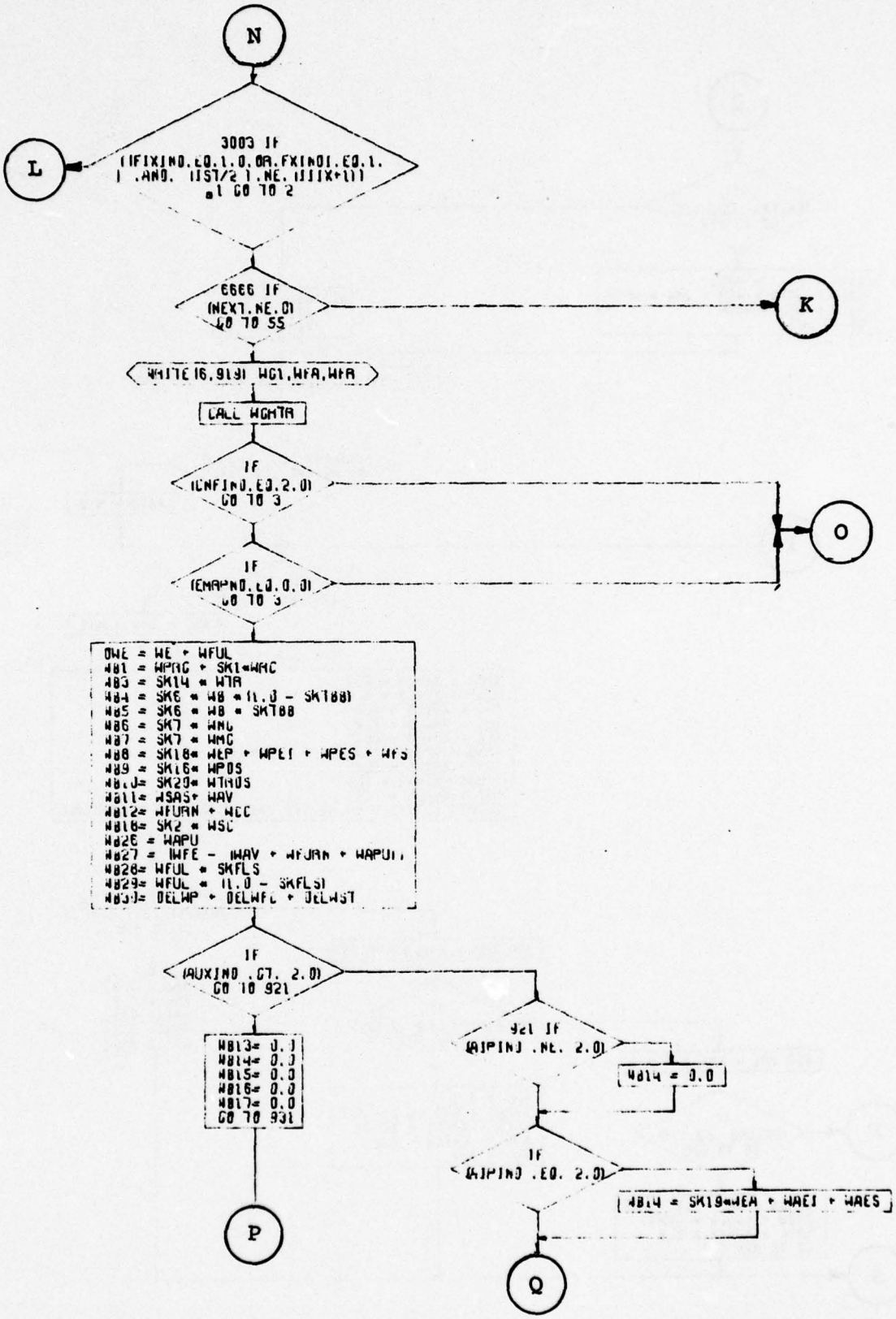

Figure 4-1. Main Control Loop (MAIN) Flow Chart (Part 8 of 13).

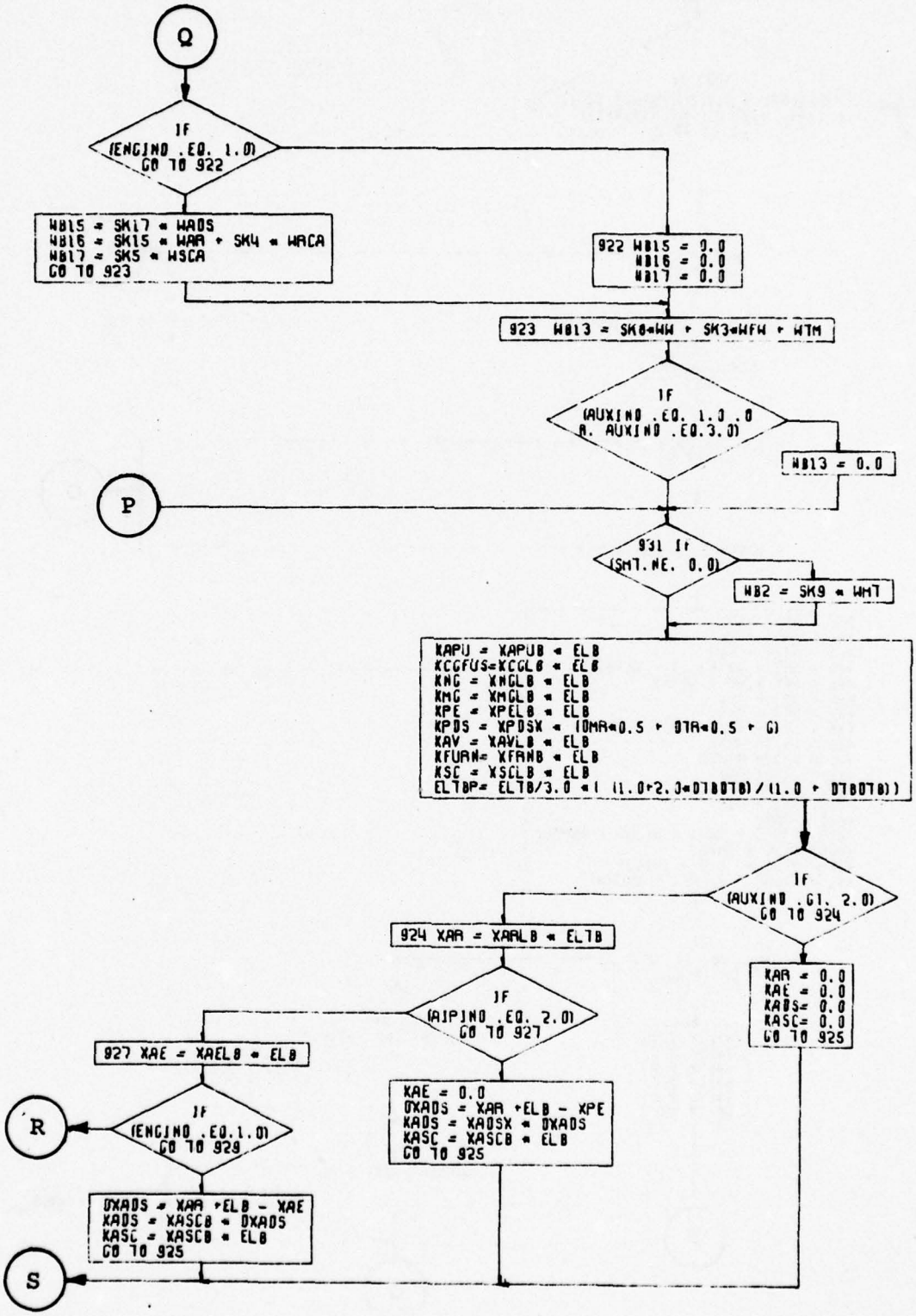

Figure 4-1. Main Control Loop (MAIN) Flow Chart (Part 9 of 13).

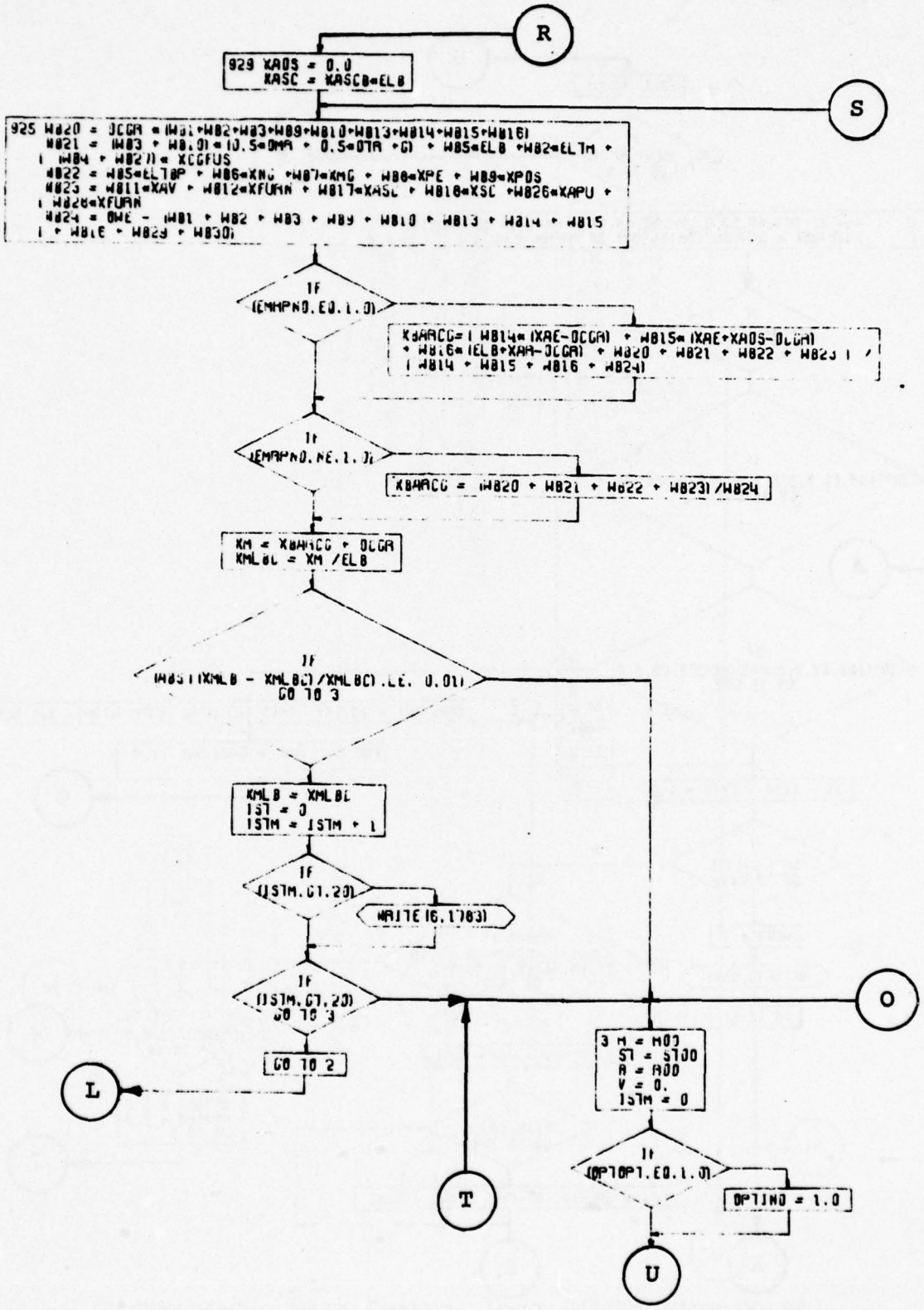

Figure 4-1. Main Control Loop (MAIN) Flow Chart (Part 10 of 13).

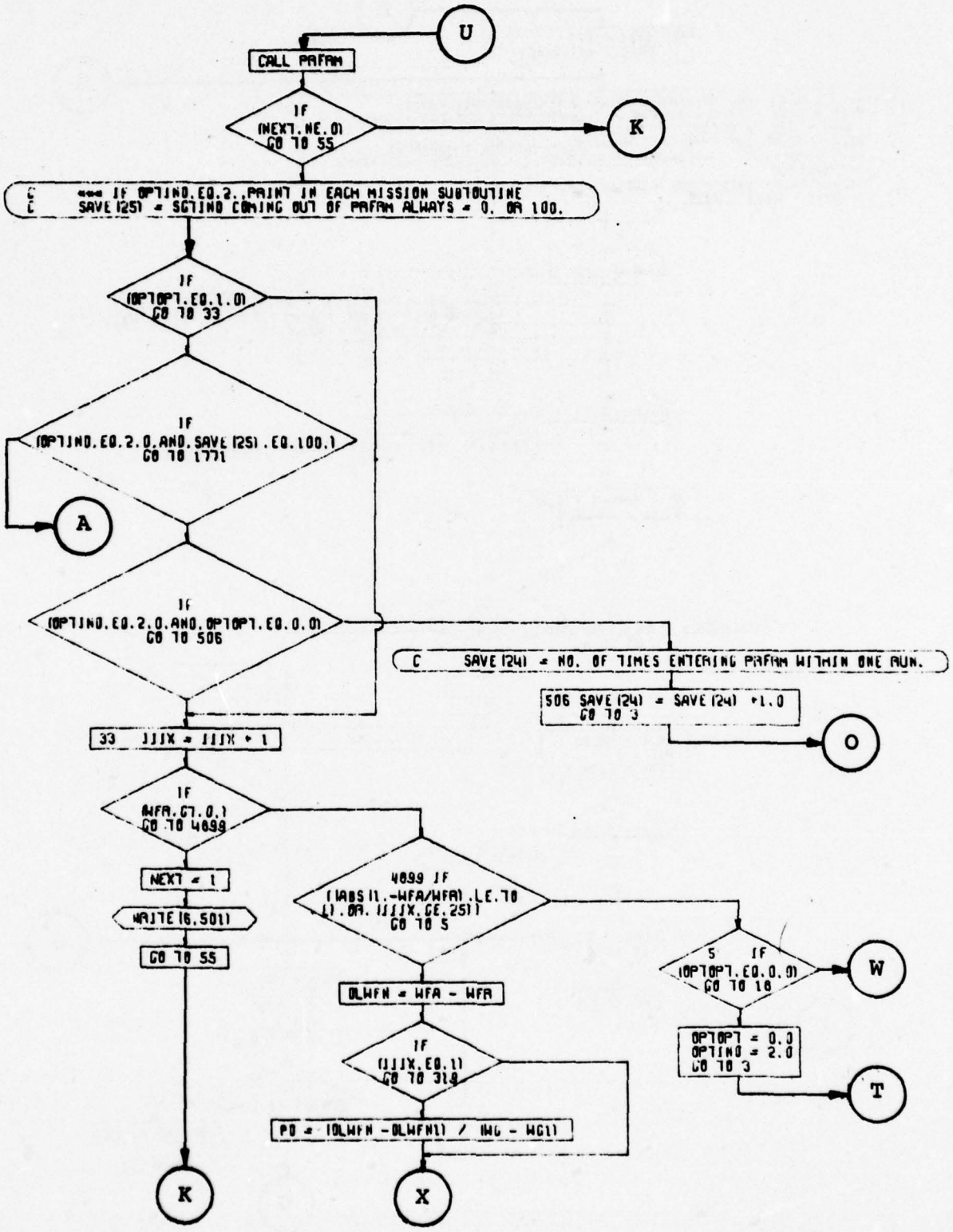

Figure 4-1. Main Control Loop (MAIN) Flow Chart (Part 11 of 13).

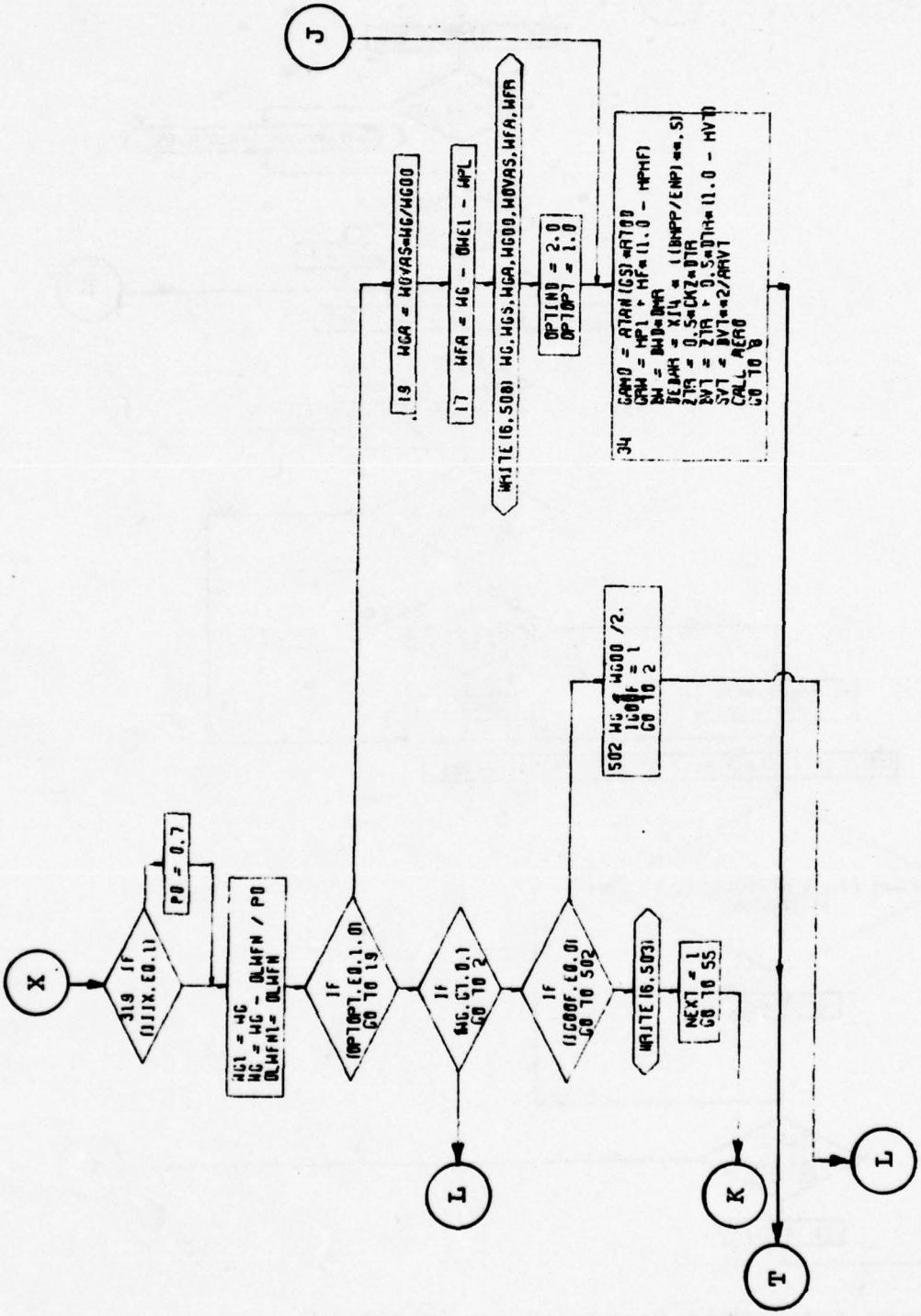

Figure 4-1. Main Control Loop (MAIN) Flow Chart (Part 12 of 13).

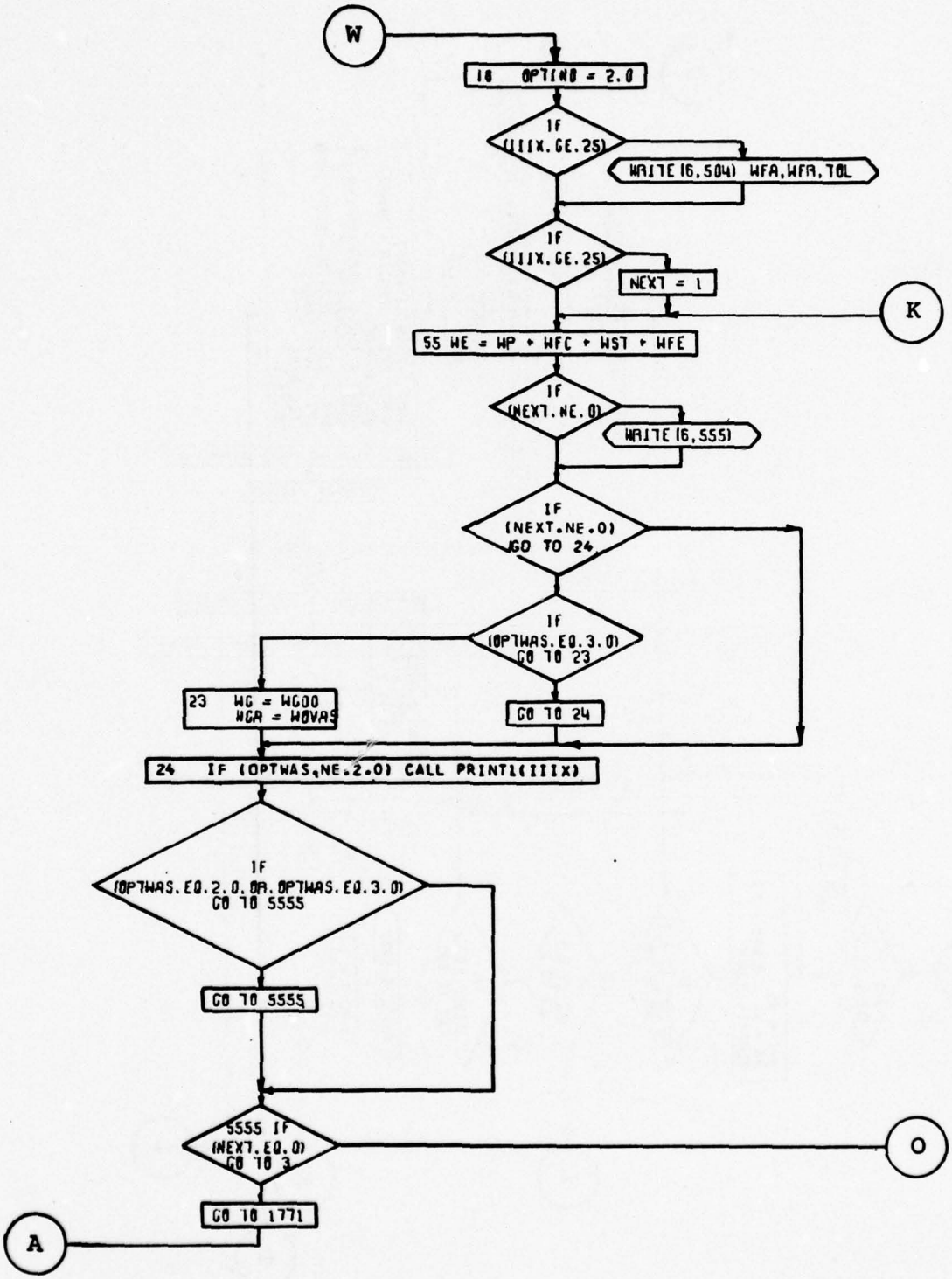

Figure 4-1. Main Control Loop (MAIN) Flow Chart (Part 13 of 13).

4.2 ATMOSPHERE SUBROUTINE

The atmosphere subroutine will calculate the atmospheric density, pressure, and temperature as a function of altitude. Three options included below are available. These are specified by means of an input indicator, ATMIND, which is input individually for the performance data and the engine sizing data. Thus, the atmosphere can be calculated differently for each segment of the flight profile and for the engine sizing.

The options are:

ATMIND = 0: Standard atmosphere

ATMIND = 1: Constant increment in temperature above standard temperature

ATMIND = 2: Nonstandard temperature distribution as a function of altitude

The flow chart for the atmosphere subroutine is shown in Figure 4-2.

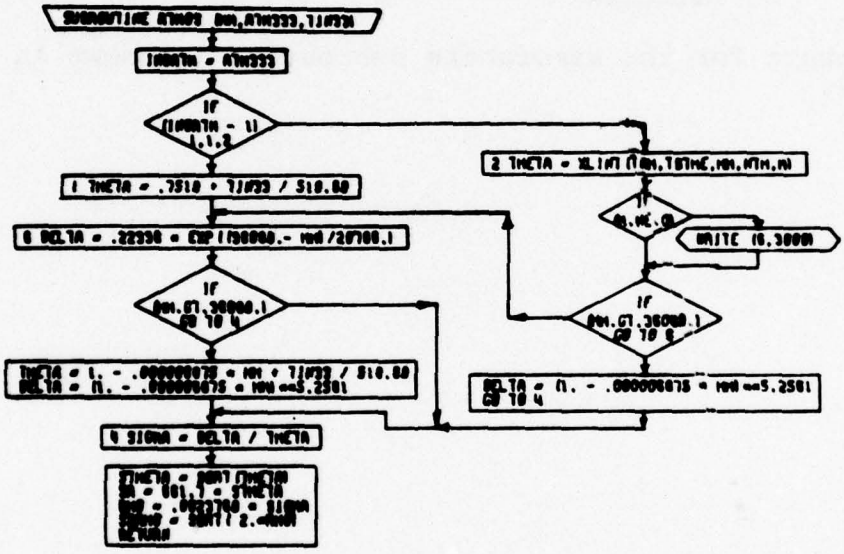

Figure 4-2. Atmosphere Subroutine, Flow Chart.

4.3 DRAG CALCULATIONS SUBROUTINE

The drag calculations subroutine uses the factors a_5 through a_9, as determined by the aerodynamics calculations subroutine to calculate the total drag of the helicopter. Besides parasite drag, in the case of compound or winged helicopters, total drag includes wing induced drag and rotor/wing interference drag, the latter being calculated using a simplified Prandtl Bi-Plane Theory approach. The total helicopter propulsive thrust coefficient (C_X) is calculated as a function of forward flight helicopter advance ratio (μ). The subroutine flow chart is shown in Figure 4-3.

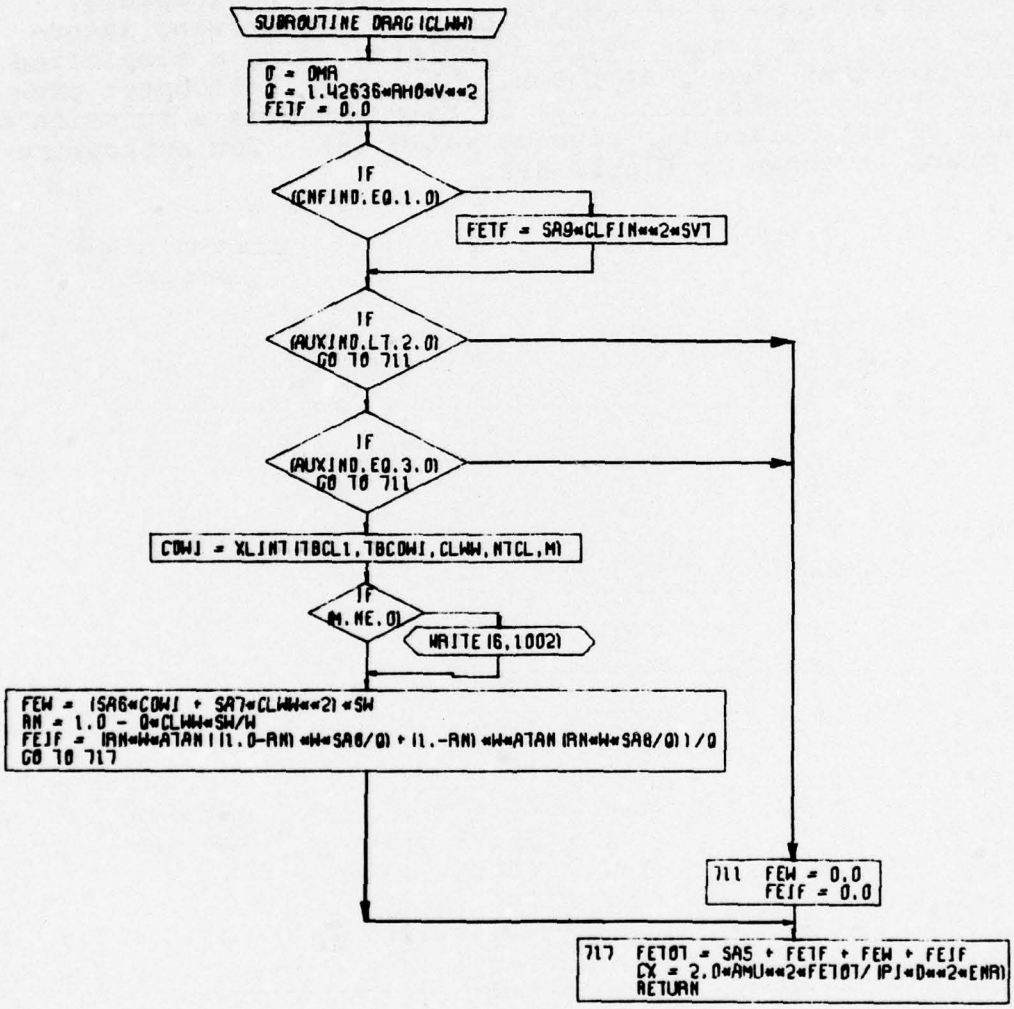

Figure 4-3. Drag Calculations (DRAG) Subroutine Flow Chart (Part 1 of 1).

4.4 ENGINE LIBRARY AND ENGINE CYCLE SUBROUTINES

The basic cycle performance data consists of tabulated values of four variables: thrust (power), fuel flow, gas generator shaft rpm, and power turbine shaft rpm. For the primary engine cycles, these tables are functions of Mach number and turbine inlet temperature. For lift engine cycles, the tables are functions only of turbine inlet temperature. All data are in referred, normalized format as shown in Table 4-1.

TABLE 4-1
ENGINE CYCLE DATA FORMAT

VARIABLE	SYMBOL	REFERRED, NORMALIZED FORM
Thrust	F_N	$F_N/\delta F_N^*$
Power	SHP	$SHP/\delta\sqrt{\theta}SHP^*$
Gas Generator rpm	N_I	$N_I/\sqrt{\theta}N_I^*$
Power Turbine rpm	N_{II}	$N_{II}/\sqrt{\theta}N_{II}^*$
Fuel Flow	$\dot{W}_f$	$\dot{W}_f/\delta\sqrt{\theta}F_N^*$ or $\dot{W}_f/\delta\sqrt{\theta}SHP^*$
Turbine Inlet Temperature	T	T/θ
Where:	* = Max. Power Setting, Static, Sea Level, Standard Day	
	θ = Ambient Temperature (°R) Divided by 518.69°R	
	δ = Ambient Pressure (psia) Divided by 14.696 psia	

The standard engine cycle library consists of forty-five different generalized engine cycles shown in Table 4-2. The data for each cycle is punched in card form, accessible for input with the remainder of the input data for a given case. Each cycle is numbered; and, to guard against selection of an incorrect cycle, the cycle number is checked against a similar number input to the program by the user.

TABLE 4-2

HESCOMP ENGINE LIBRARY

		Engine Cycle Number	Maximum Turbine Inlet Temperature - °R	Compressor Design Pressure Ratio	Fan Bypass Ratio
Auxiliary Independent Propulsion Engines / Primary Propulsion Engines	Turboshaft Engines	1	2600	13	
		2	2600	16	
		3	2900	13	
		4	2900	16	
		5	2900	19	
		6	3200	13	
		7	3200	16	
		8	3200	19	
		9	3200	22	
	Turbojet Engines	10	2600	13	
		11	2600	16	
		12	2900	13	
		13	2900	16	
		14	2900	19	
		15	3200	13	
		16	3200	16	
		17	3200	19	
		18	3200	22	
	Turbofan Engines	19,20,21	2600	16	2,4,6
		22,23,24	2600	20	2,4,6
		25,26,27	2900	16	2,4,6
		28,29,30	2900	20	2,4,6
		31,32,33	2900	24	2,4,6
		34,35,36	3200	16	2,4,6
		37,38,39	3200	20	2,4,6
		40,41,42	3200	24	2,4,6
		43,44,45	3200	28	2,4,6

The fuel flow of the basic engine cycle should correspond to the manufacturer's specification data. Adjustments to the fuel flow level may be made by means of the input multiplier, K_{FF}.

Because of the normalized, referred format, all data are valid for any ambient temperature, standard or nonstandard. With the exception of referred power, none of the tables are dependent upon power turbine speed. By setting N2IND = 2, turboshaft engine power at nonoptimum N_{II} will be calculated by the program by multiplying power at optimum N_{II} by a correction factor, K_{PN}, which is a function of $N_{II}/N_{II\ OPT}$. The factor K_{PN} is normally calculated by the program and obeys a second-order relationship:

$$K_{P_N} = [1 - (1 - \frac{N_{II}}{N_{II\ opt}})^2]$$

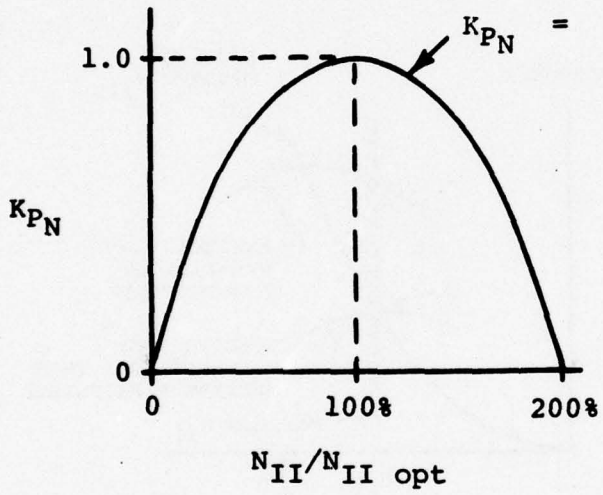

Most, but not all, turboshaft engines will obey this relationship. For engine cycles whose performance is not properly represented by the above curve, the user may input a table of K_{PN} versus $N_{II}/N_{II\ OPT}$. The program user inputs $N_{II}/N_{II\ MAX}$ for each flight segment and $N_{II\ MAX}/N^*_{II}$ for the engine cycle. The program uses this information to establish the value of $N_{II}/N_{II\ OPT}$ for each point of flight.

By setting N2IND = 0 or 1, the program will assume that the power turbine is always operating at optimum speed and no correction will be applied. N2IND = 0 will simulate an engine cycle which is operating at optimum N_{II} and for which no upper limit has been placed on N_{II}. For many applications, this option will be perfectly adequate for preliminary sizing studies. The adequacy of this assumption can be determined by consideration of the following factors:

1. It may be desirable; e.g. as in the case of a slowed-rotor compound helicopter, to reduce the main rotor rpm in cruise flight.

2. For some applications this may, in turn, force the engine to operate at a very inefficient N_{II}. In general, the optimum N_{II} increases as output power increases relative to the maximum level.

N2IND = 1 will simulate operation of an engine cycle at optimum N_{II}, but with the restriction of a maximum value for N_{II}. This type of operation is characteristic of airplanes employing fixed pitch propellers. Care should be taken in using this option because it may lead to a significant reduction in power available as shown by the sketch below:

A = Point of operation for aircraft flying at optimum N_{II}, limited by $N_{II\ MAX}$. (N2IND = 1)

B = Point of operation for aircraft flying at non-optimum N_{II}, limited by same $N_{II\ MAX}$. (N2IND = 2)

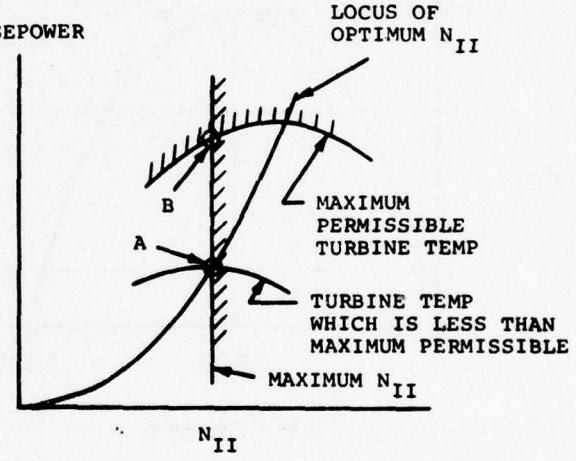

Limitations on engine cycle operation may be input to the program on any combination of the following: fuel flow, torque, gas generator speed, gas generator referred rpm, or output shaft speed. Engine ratings (power settings) are dictated by turbine temperature. Five discrete values of that parameter are input for the primary engine cycles, one for each of the following power settings: maximum, military, normal, flight idle, and ground idle.

The program will print out, during the mission, the value of turbine temperature and a code that designates which condition is governing the engine performance at that point: power or thrust required, turbine temperature, torque limit, N_I limit, referred N_I limit, N_{II} limit, or fuel flow limit.

Manufacturer's data on some engines show significant variations in both referred power ($shp/\delta\sqrt{\theta}$) and lapse rate with respect to changes in altitude. These variations are due to Reynolds' number effects. It has been found that these effects can be accounted for by means of a multiplicative factor on power available which is a function of the Reynolds number based on compressor inlet conditions, compressor blade geometry, and tip speed. Figure 4-4 shows a typical curve for a real engine. The correction factor K_{P_R} is input to the program as a function of the Reynolds' parameter

$$\frac{N_I}{N_I^*} \frac{D}{\nu_1} \quad .$$

The tabular input of power, fuel flow, N_I, and N_{II} for engines which require Reynolds number corrections should be input to the program at a nominal fixed value of the Reynolds number parameter. The K_{P_R} correction factor will then give the power at other values of the Reynolds number parameter. In the example shown in Figure 4-4, the nominal value of the parameter was chosen as 9000 seconds/foot.

The referred N_I limit is a constraint on the value of $N_I/\sqrt{\theta_1}$ where θ_1 is the temperature ratio at the compressor face. This limit simulates a restriction on compressor speed. The user inputs a maximum value of $N_I/N_I^*\sqrt{\theta_1}$.

The engine dry weight and dimensions are calculated by means of the input parameters k_3, k_{3_I}, k_4, k_{4_I}, ξ_4 and ξ_{4_I}:

Primary engines:

$$\text{weight (lb)} = k_3 \frac{SHP^*}{N_P} + k_4$$

$$\text{diameter (ft)} = \xi_4 \left[\frac{SHP^*}{N_P}\right]^{1/2}$$

N_P = number of primary engines

Auxiliary Independent Engines:

$$\text{weight (lb)} = k_{3_I} \frac{F_N^*}{N_{P_i}} + k_{4_I} \text{ or } k_{3_I} \frac{SHP^*_i}{N_{P_i}} + k_{4_I}$$

$$\text{diameter (ft)} = \xi_{4_I} \left[\frac{F_N^*}{N_{P_i}}\right]^{1/2} \text{ or } \xi_{4_I} \left[\frac{SHP^*_i}{N_{P_i}}\right]^{1/2}$$

N_{P_i} = number of independent auxiliary engines

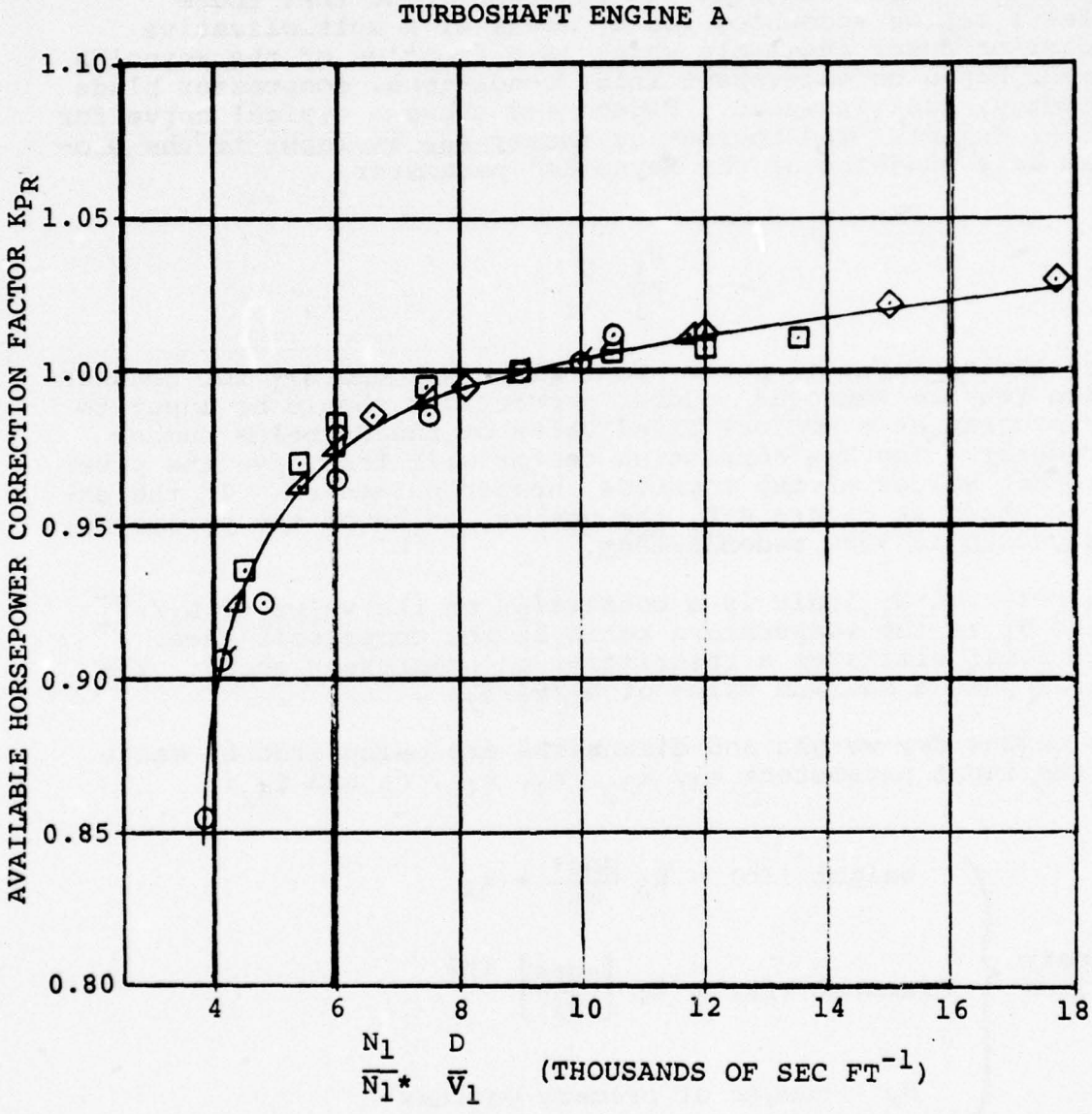

Figure 4-4. Typical Reynolds Number Correction Factor for a Turboshaft Engine Cycle.

It should be noted that auxiliary independent engine input data can be created from the engine cycle library data simply by the input of the applicable engine cycle IBM card deck, preceded and followed by a "66666" card. Nonstandard auxiliary independent engine performance is input using the sheet provided for that purpose.

Figures 4-5 through 4-12 are flow charts of the engine cycle subroutines. The purpose of these subroutines is described in Table 3-1 in Section 3-0 of this document.

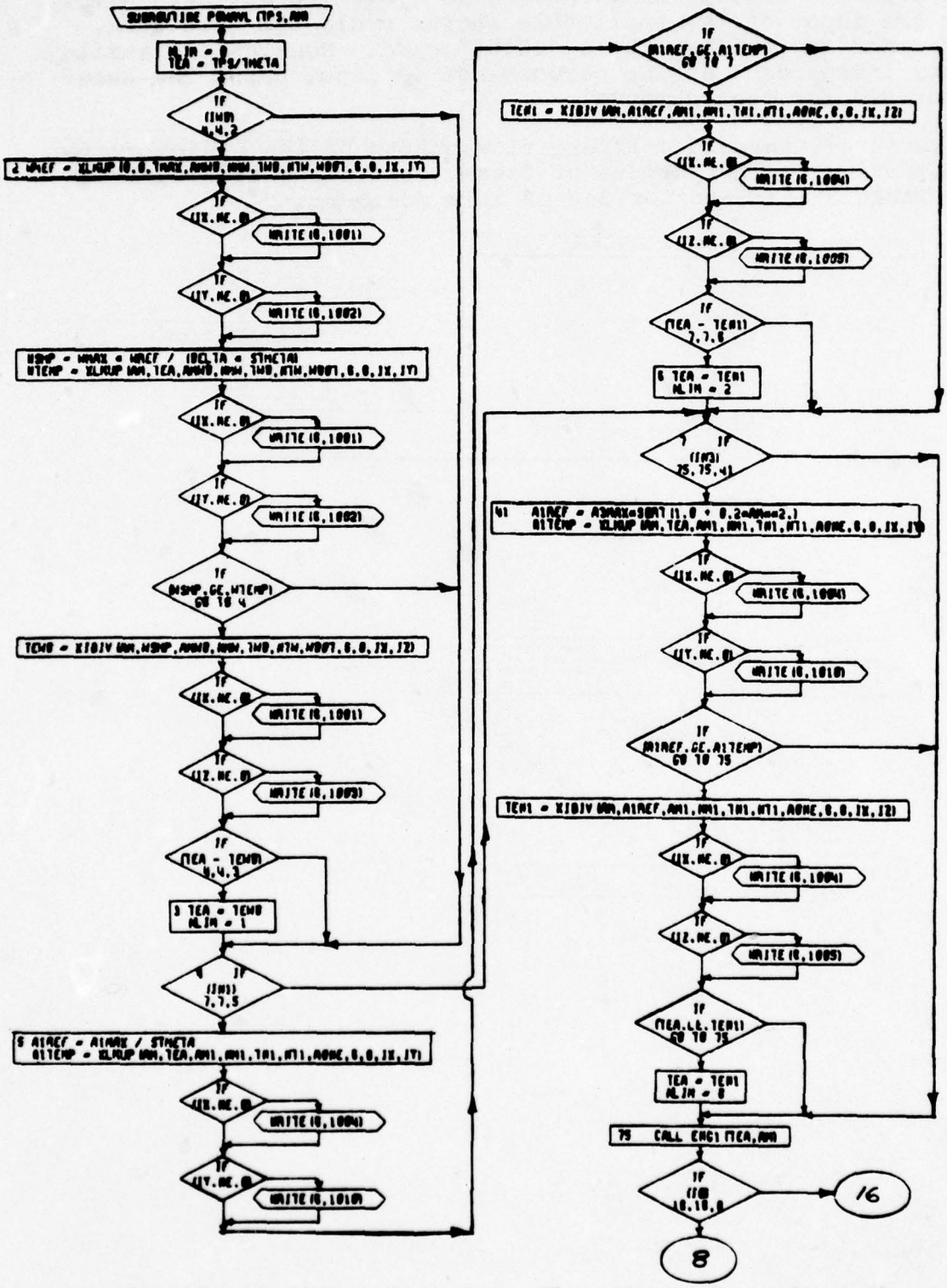

Figure 4-5. POWAVL Subroutine, Flow Chart (Part 1 of 3).

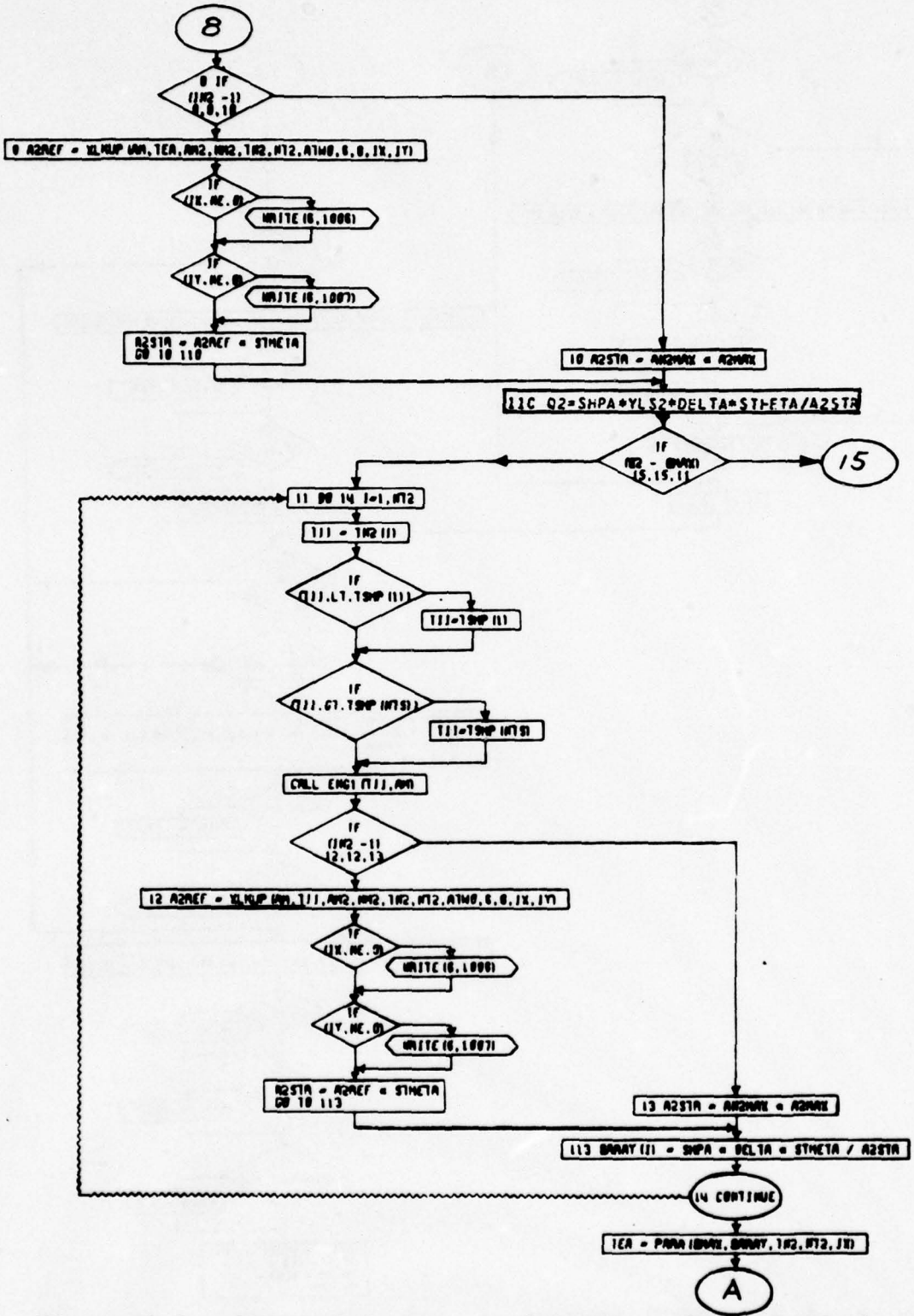

Figure 4-5. POWAVL Subroutine, Flow Chart (Part 2 of 3).

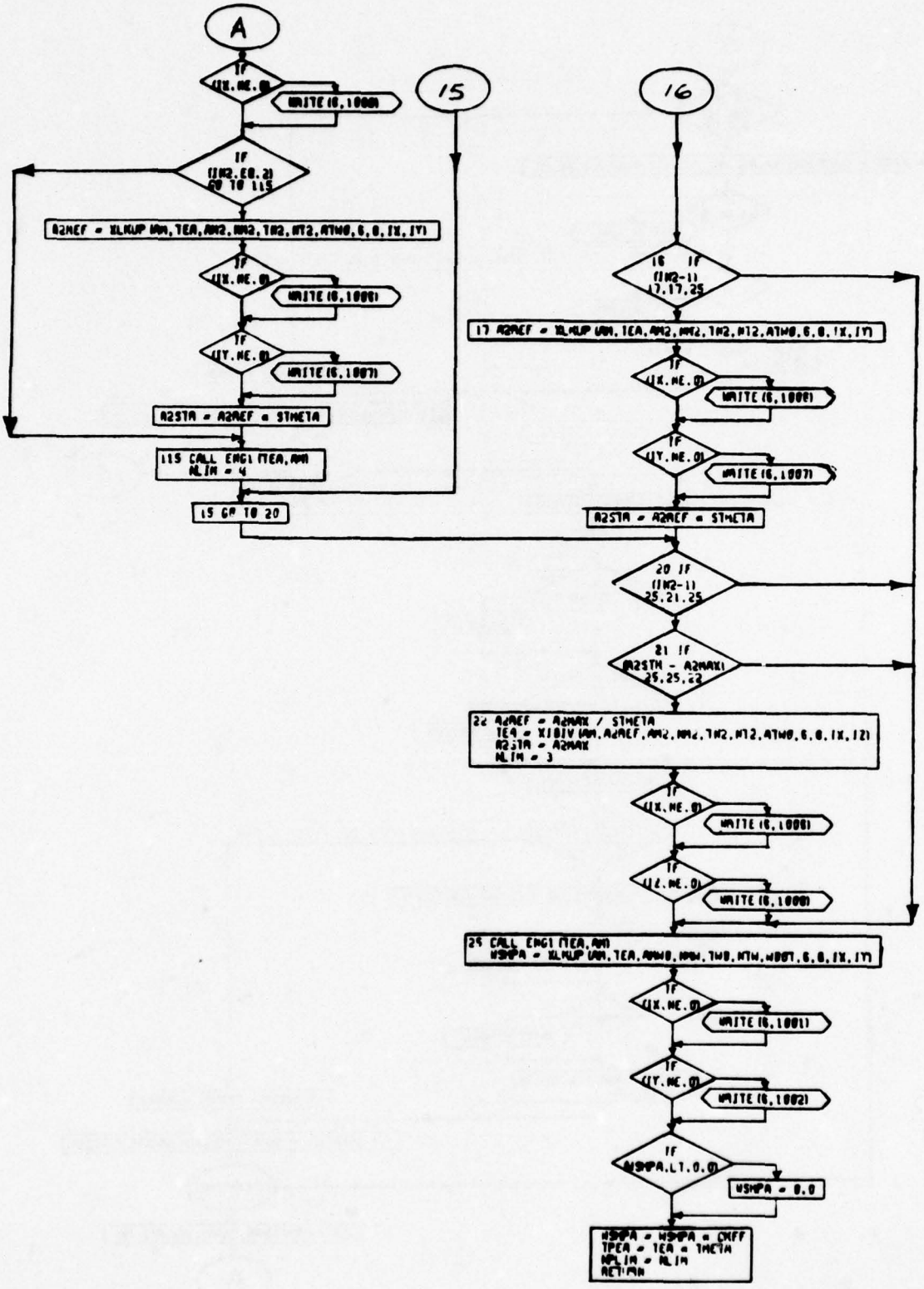

Figure 4-5. POWAVL Subroutine, Flow Chart (Part 3 of 3).

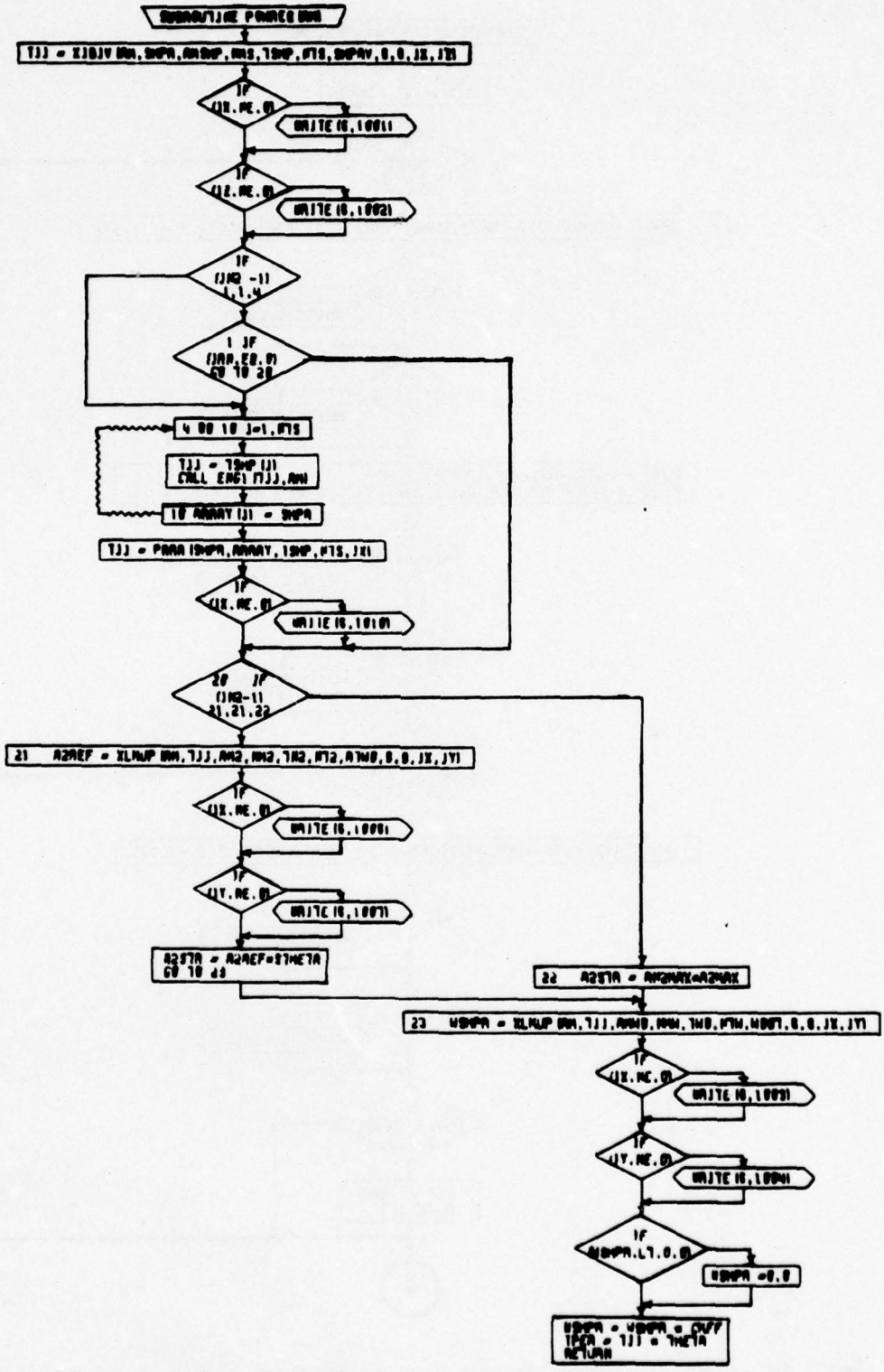

Figure 4-6. POWREQ Subroutine, Flow Chart.

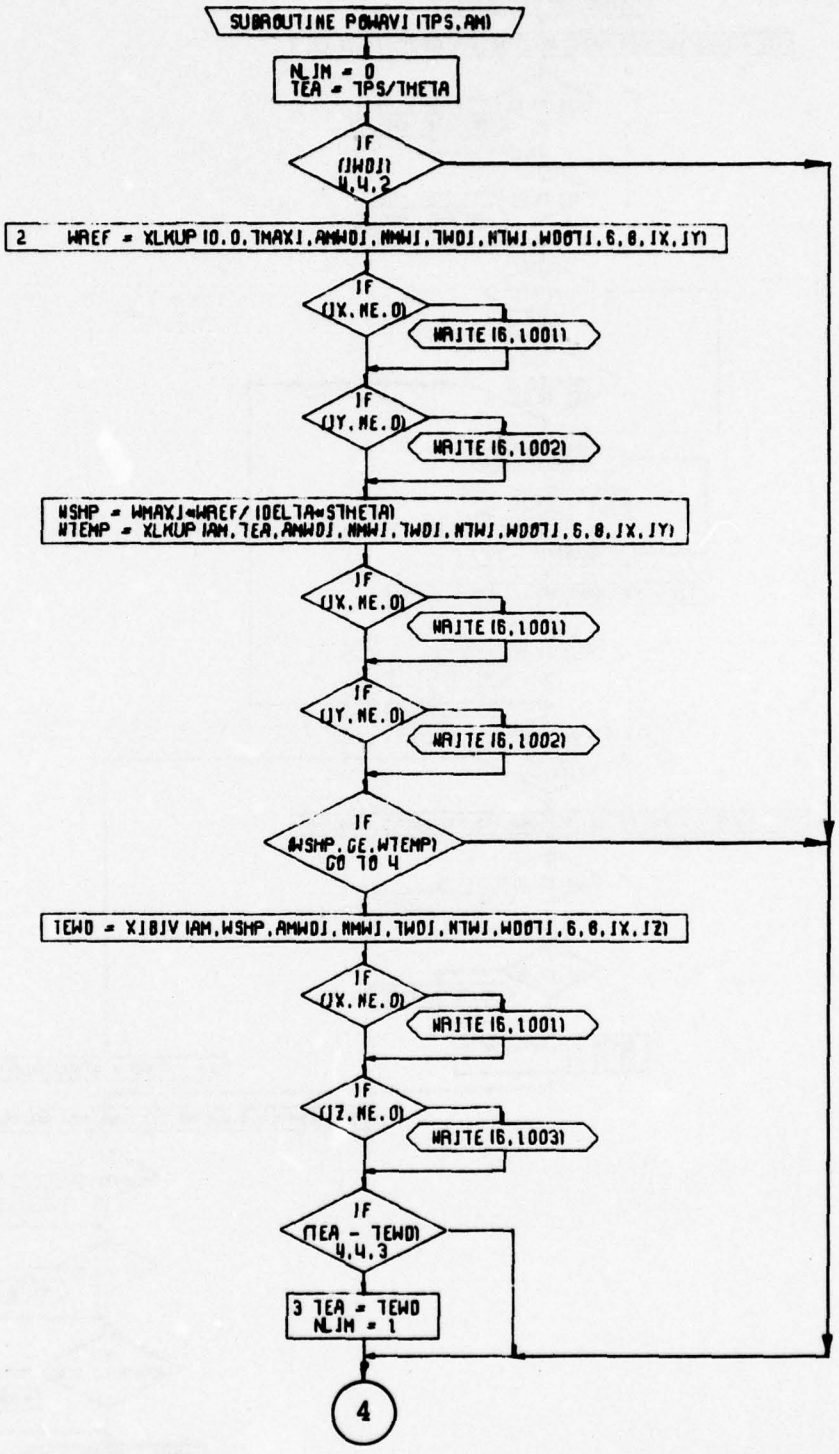

Figure 4-7. POWAVI Subroutine Flow Chart (Part 1 of 7).

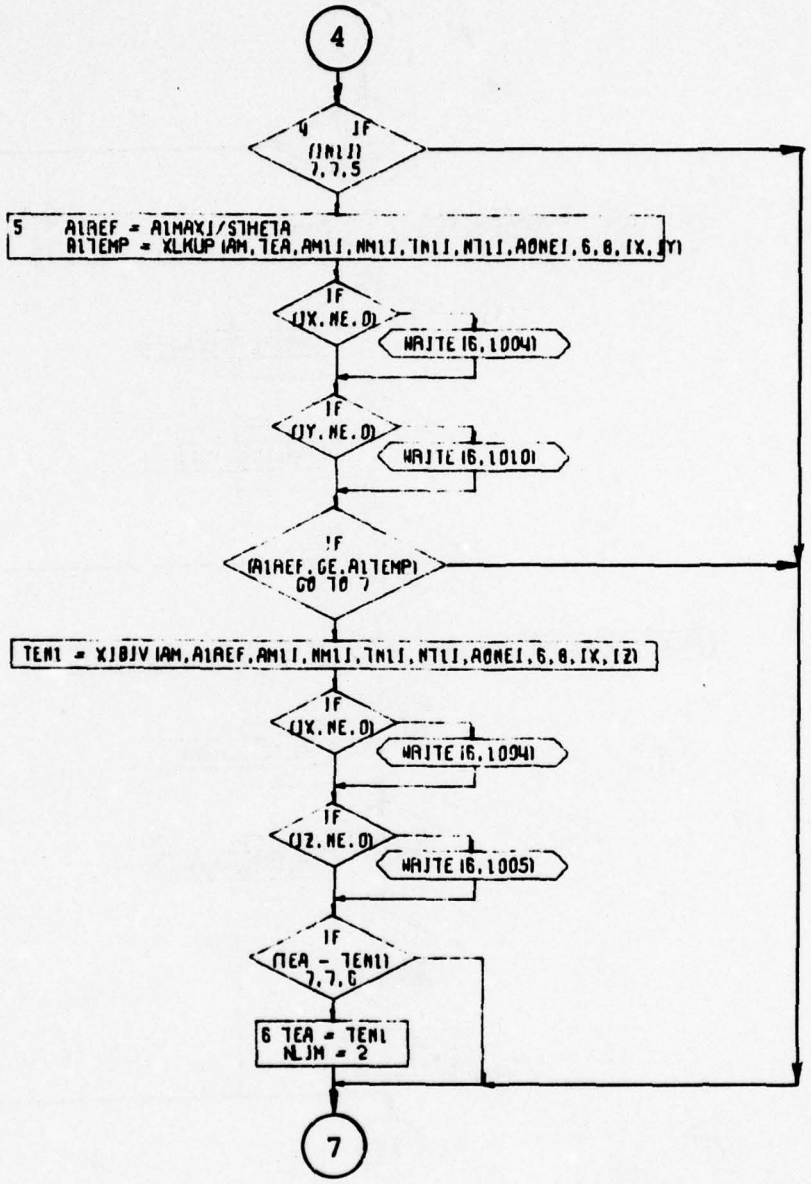

Figure 4-7. POWAVI Subroutine Flow Chart (Part 2 of 7).

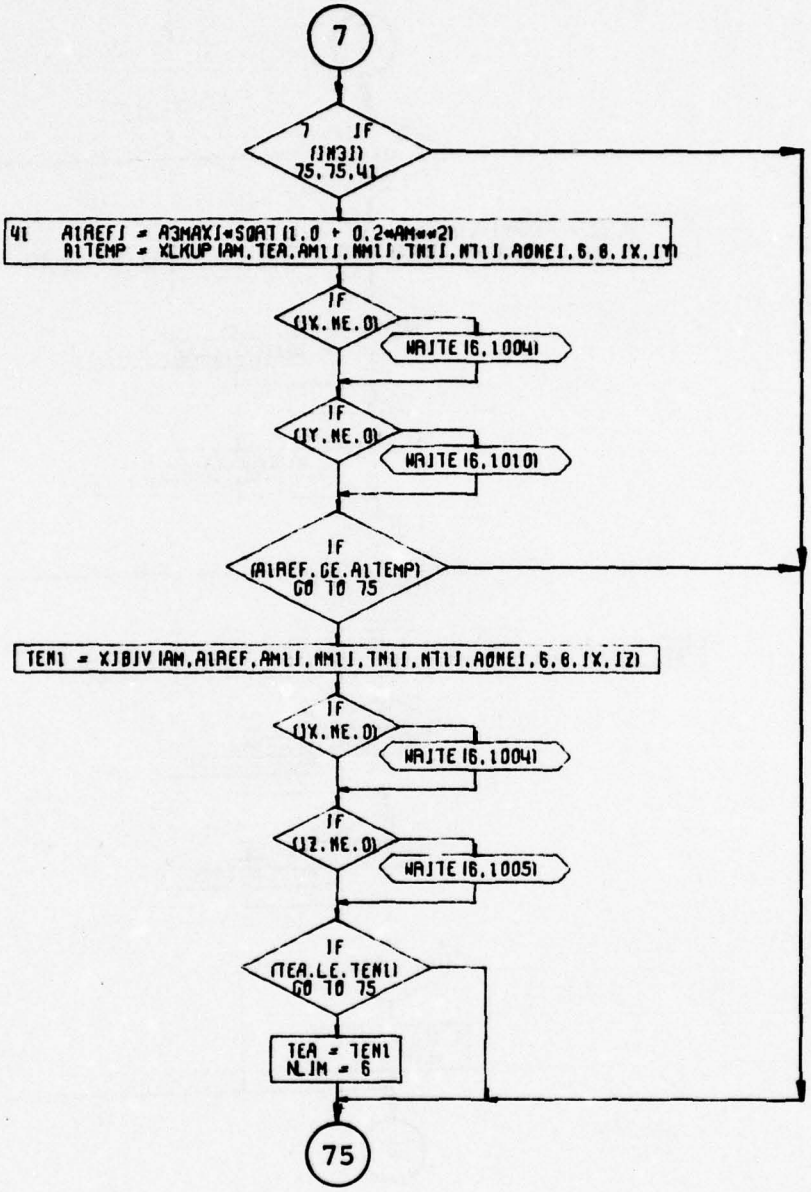

Figure 4-7. POWAVI Subroutine Flow Chart (Part 3 of 7).

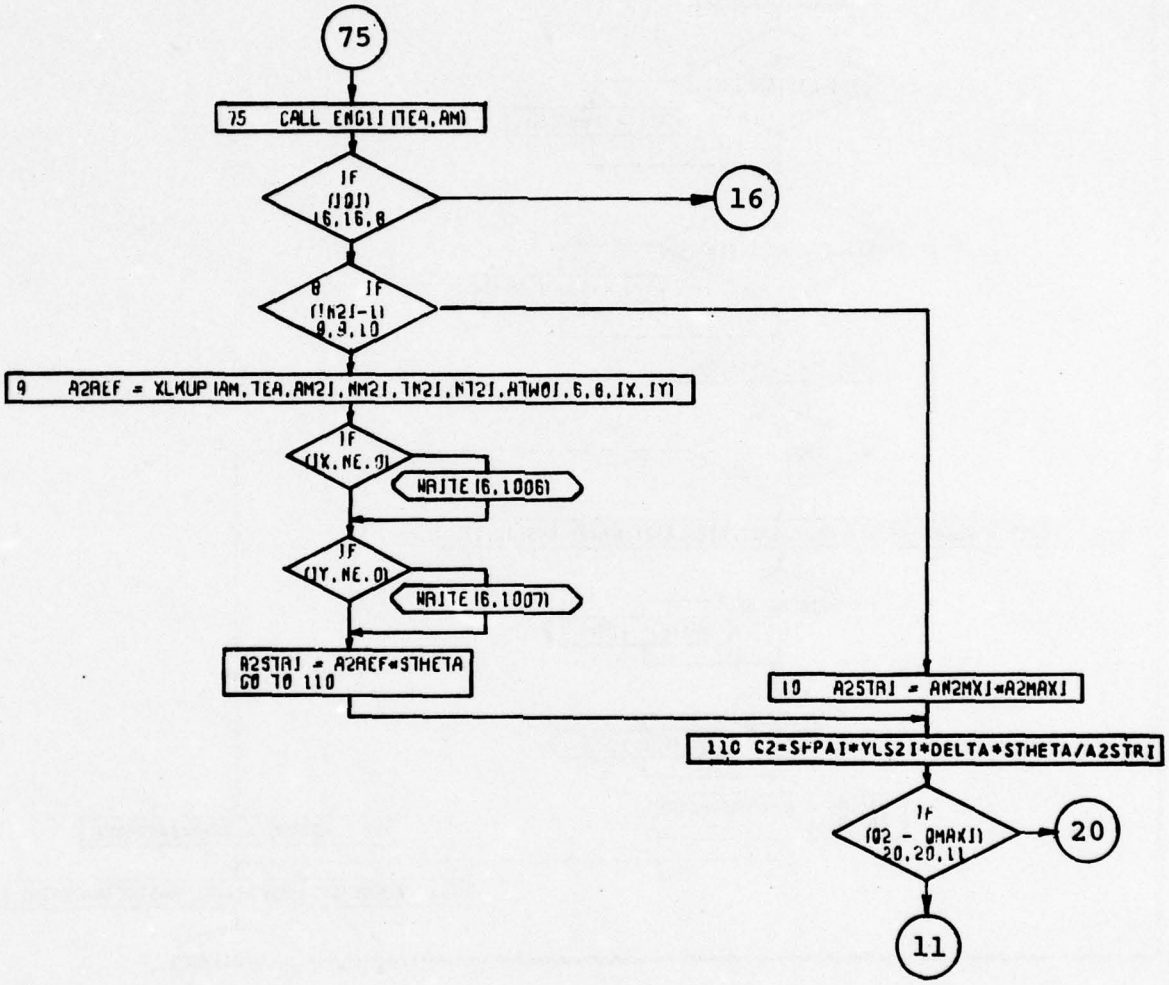

Figure 4-7. POWAVI Subroutine Flow Chart (Part 4 of 7).

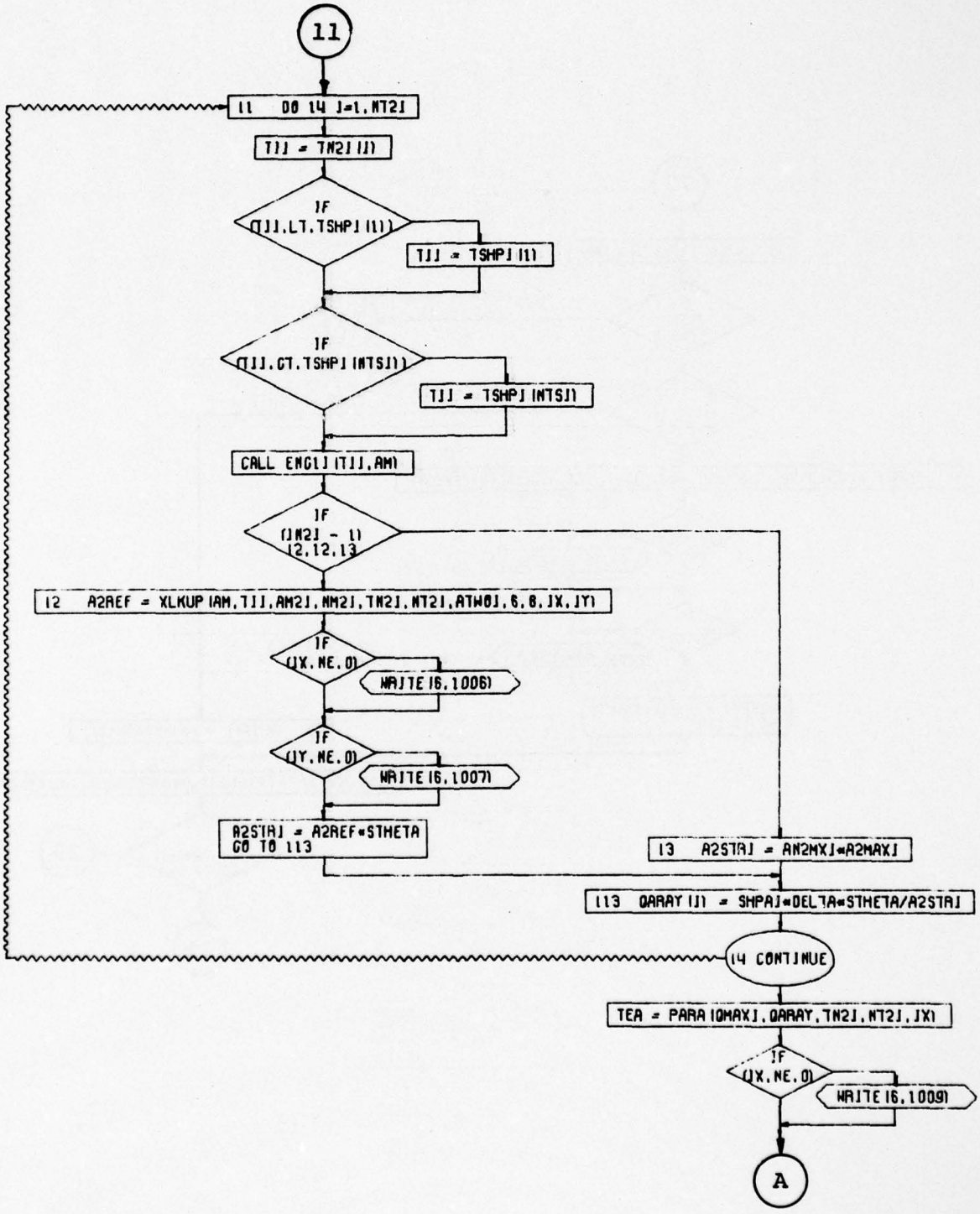

Figure 4-7. POWAVI Subroutine Flow Chart (Part 5 of 7).

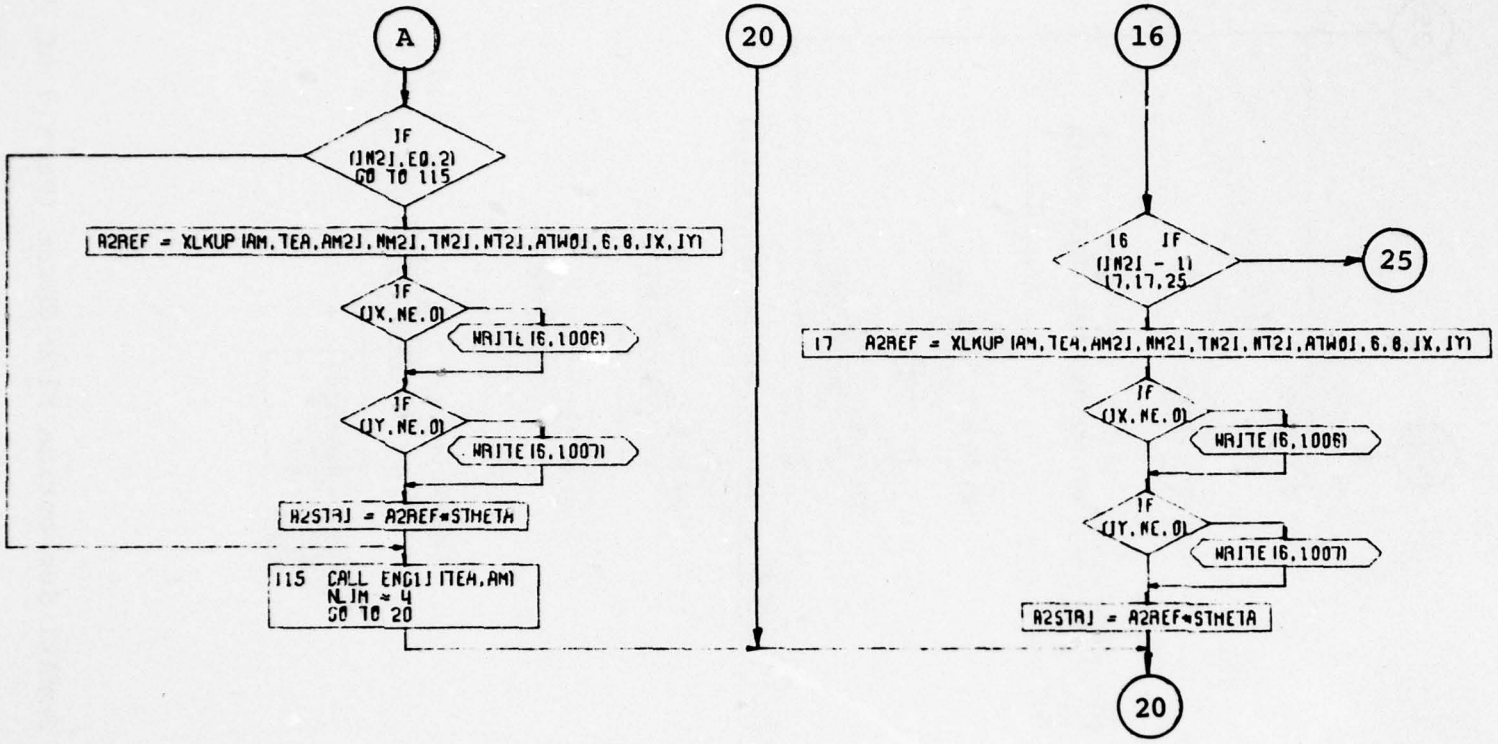

Figure 4-7. POWAVI Subroutine Flow Chart (Part 6 of 7).

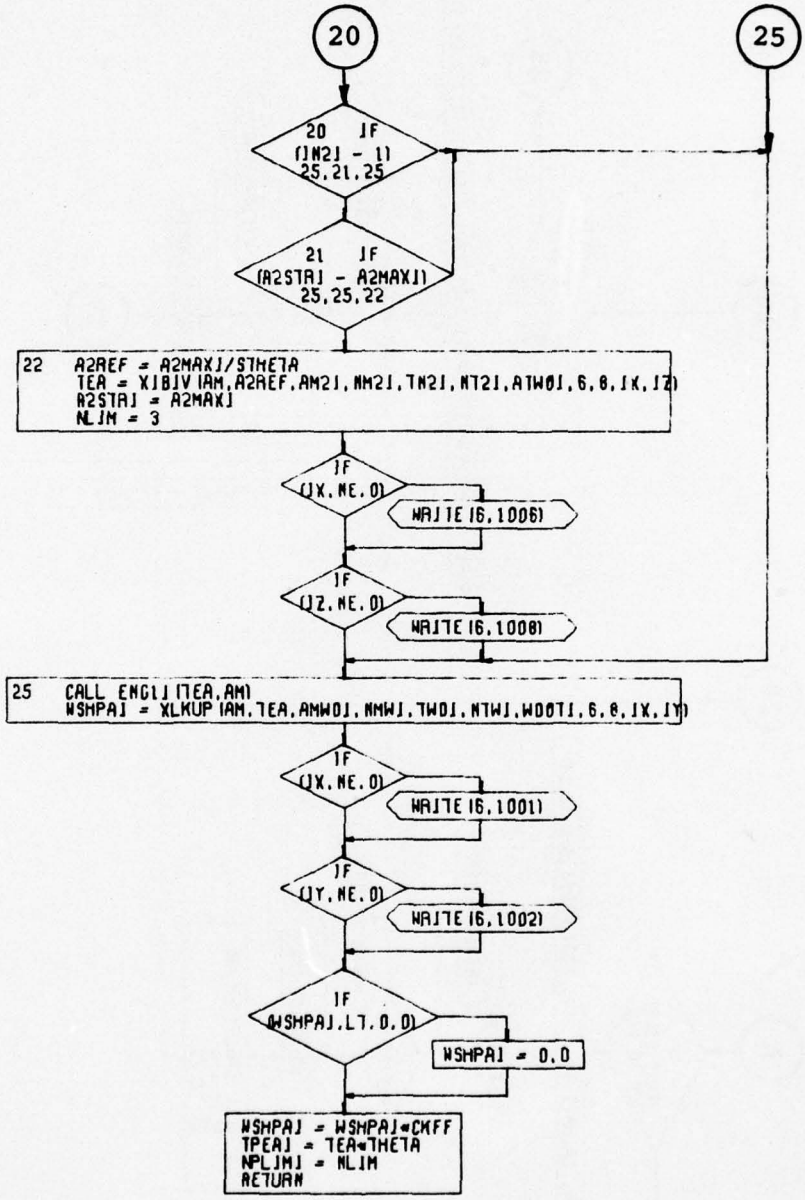

Figure 4-7. POWAVI Subroutine Flow Chart (Part 7 of 7).

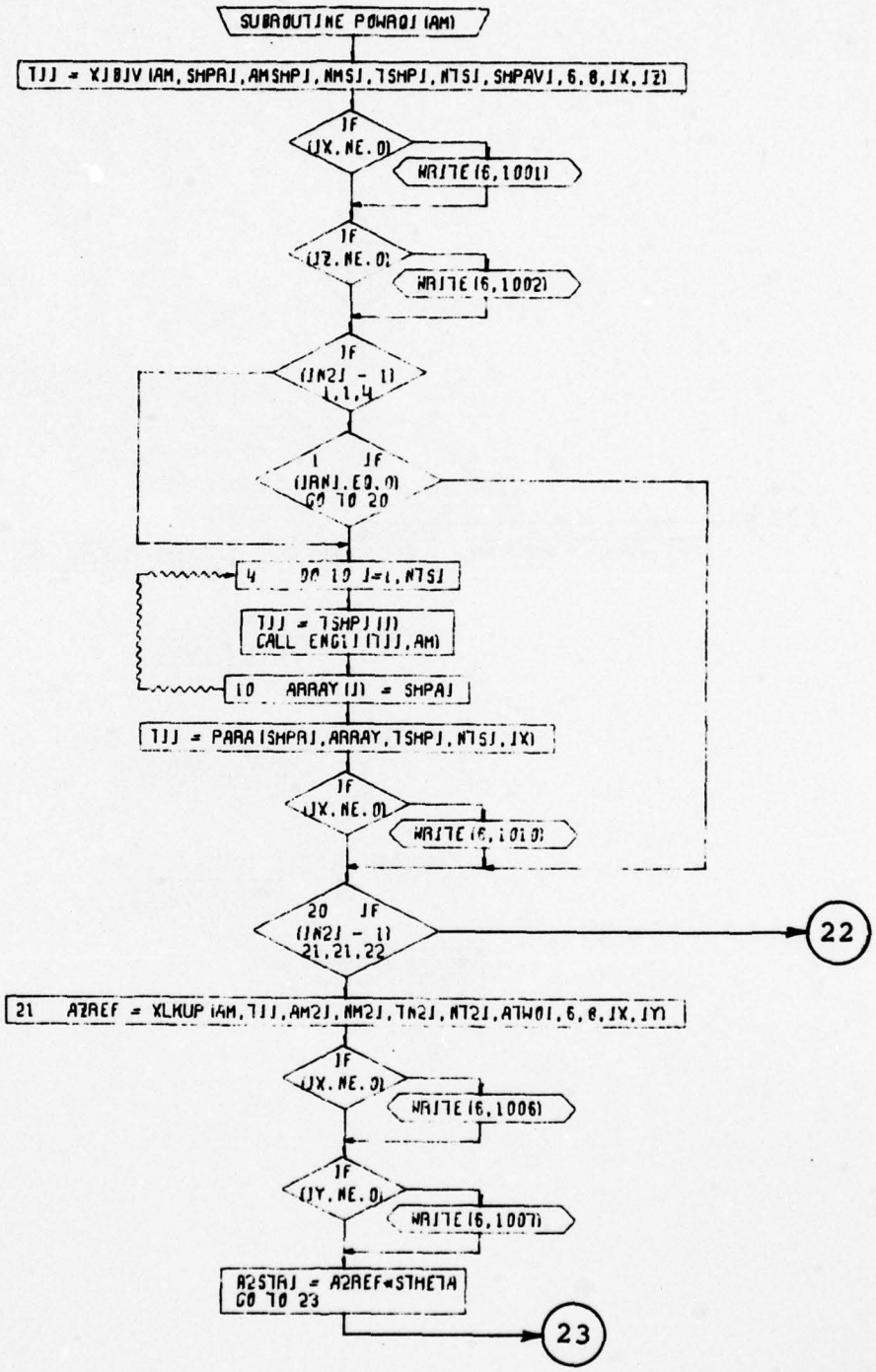

Figure 4-8. POWRQI Subroutine Flow Chart (Part 1 of 2).

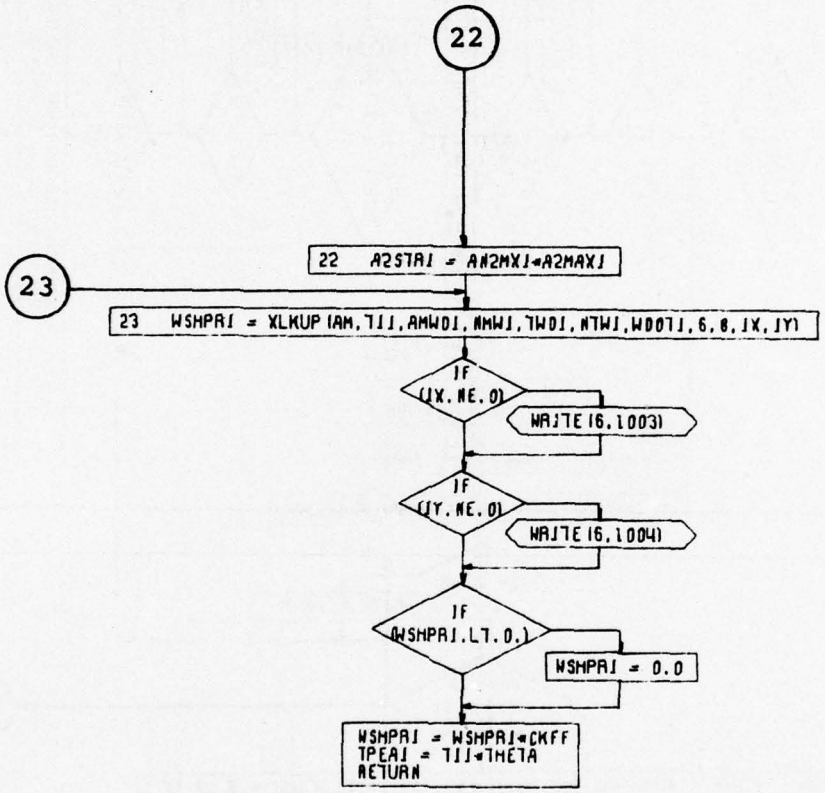

Figure 4-8. POWRQI Subroutine Flow Chart (Part 2 of 2).

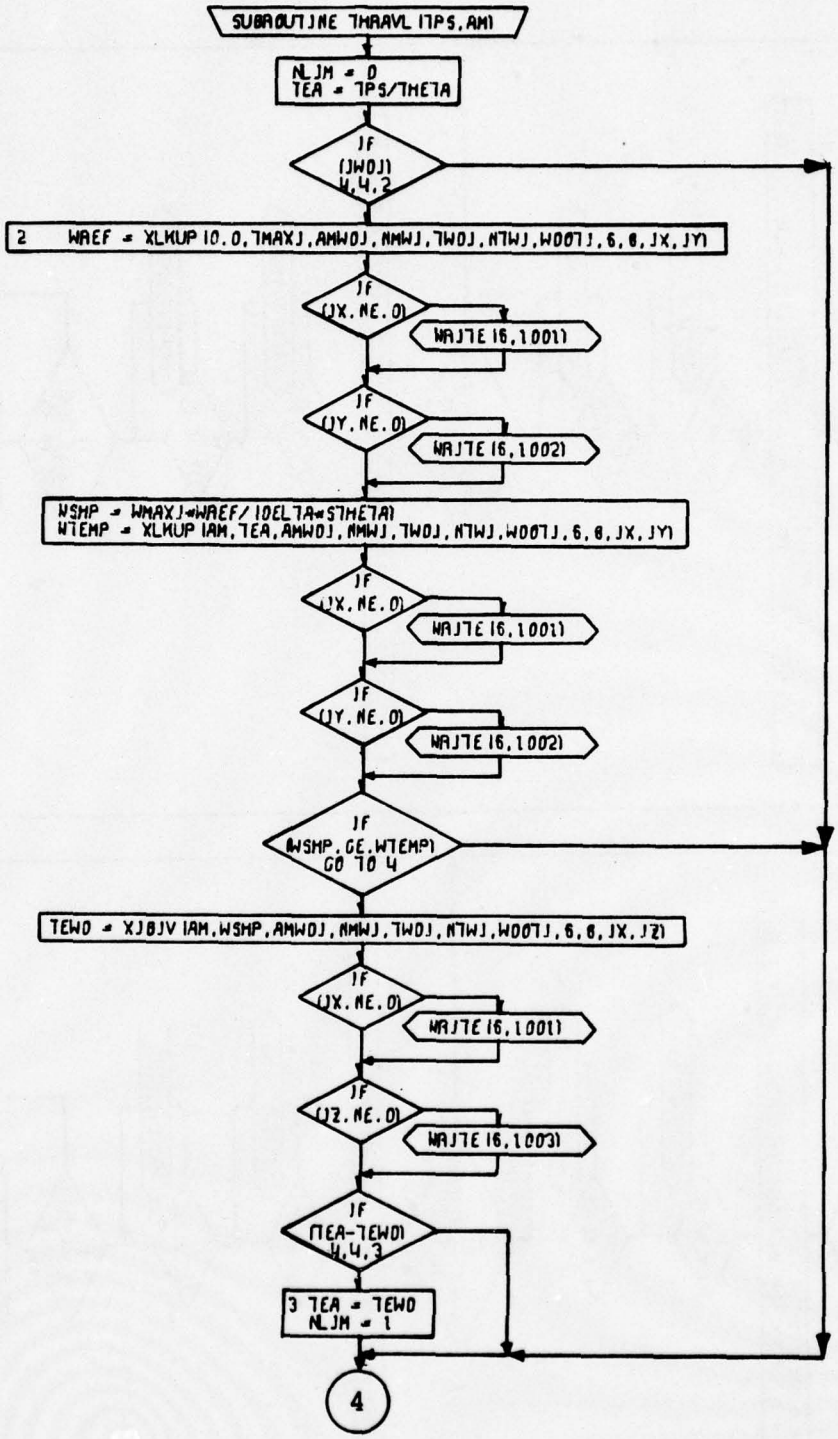

Figure 4-9. THRAVL Subroutine Flow Chart (Part 1 of 3).

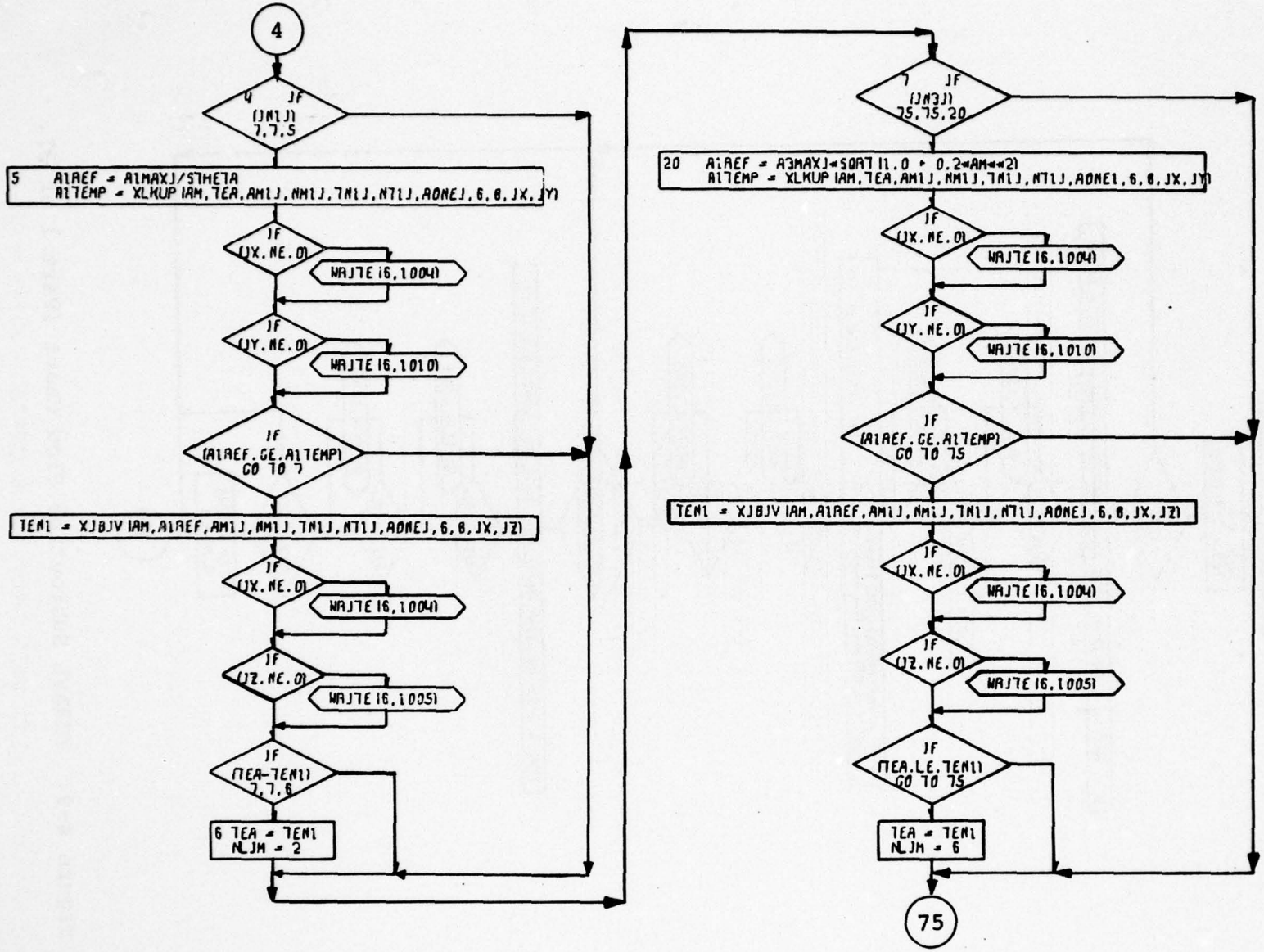

Figure 4-9. THRAVL Subroutine Flow Chart (Part 2 of 3).

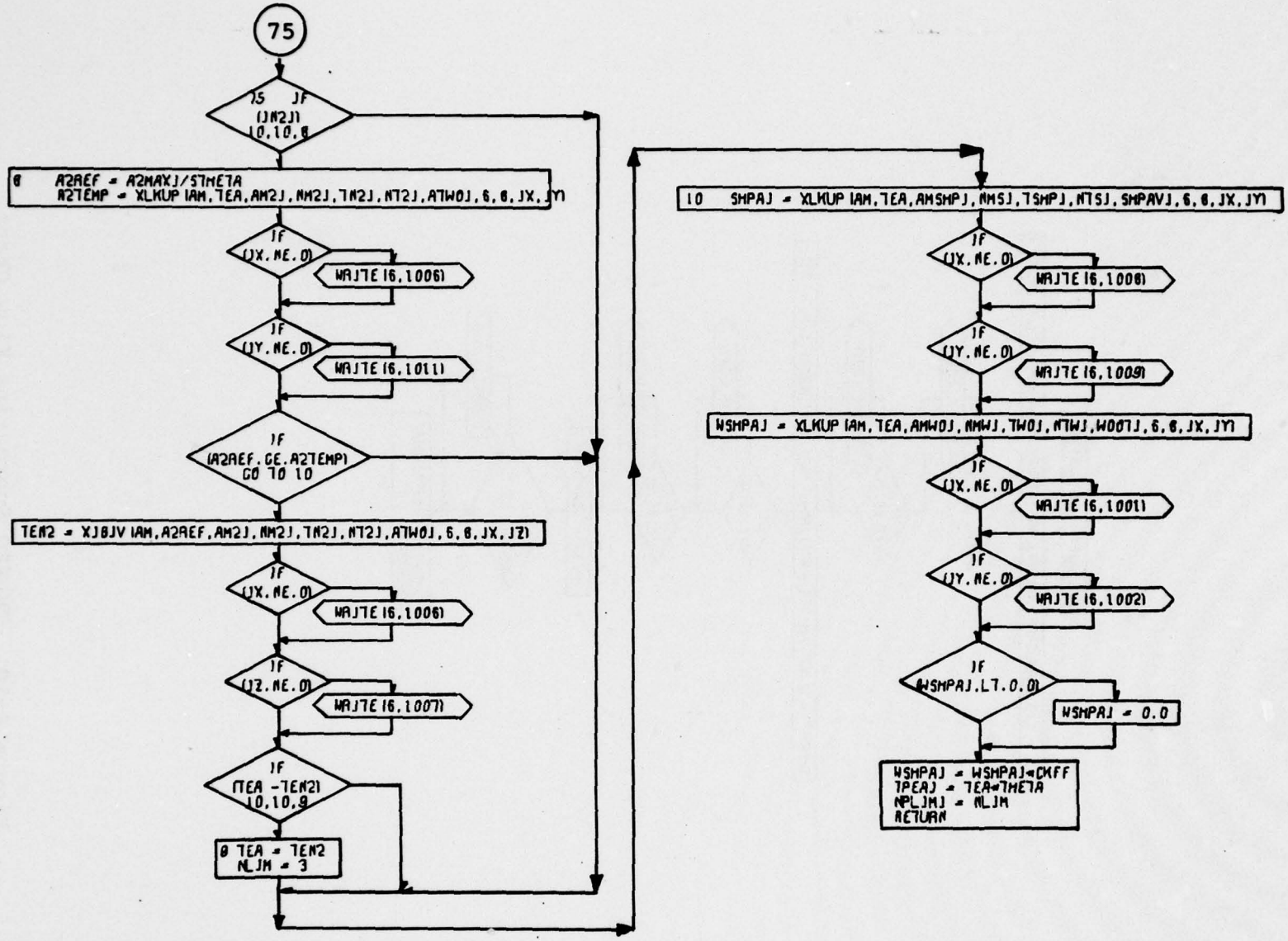

Figure 4-9. THRAVL Subroutine Flow Chart (Part 3 of 3).

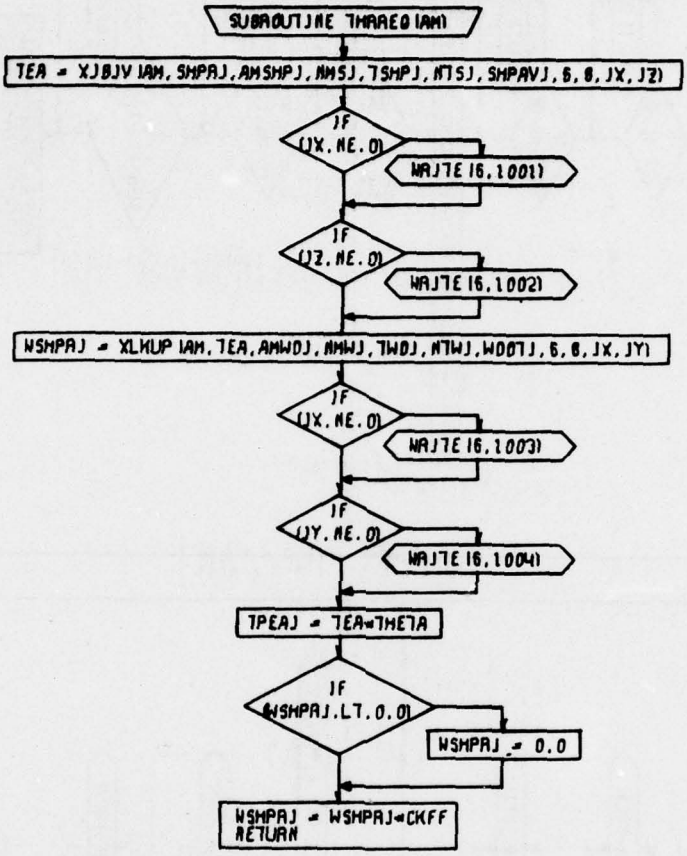

Figure 4-10. THRREQ Subroutine Flow Chart.

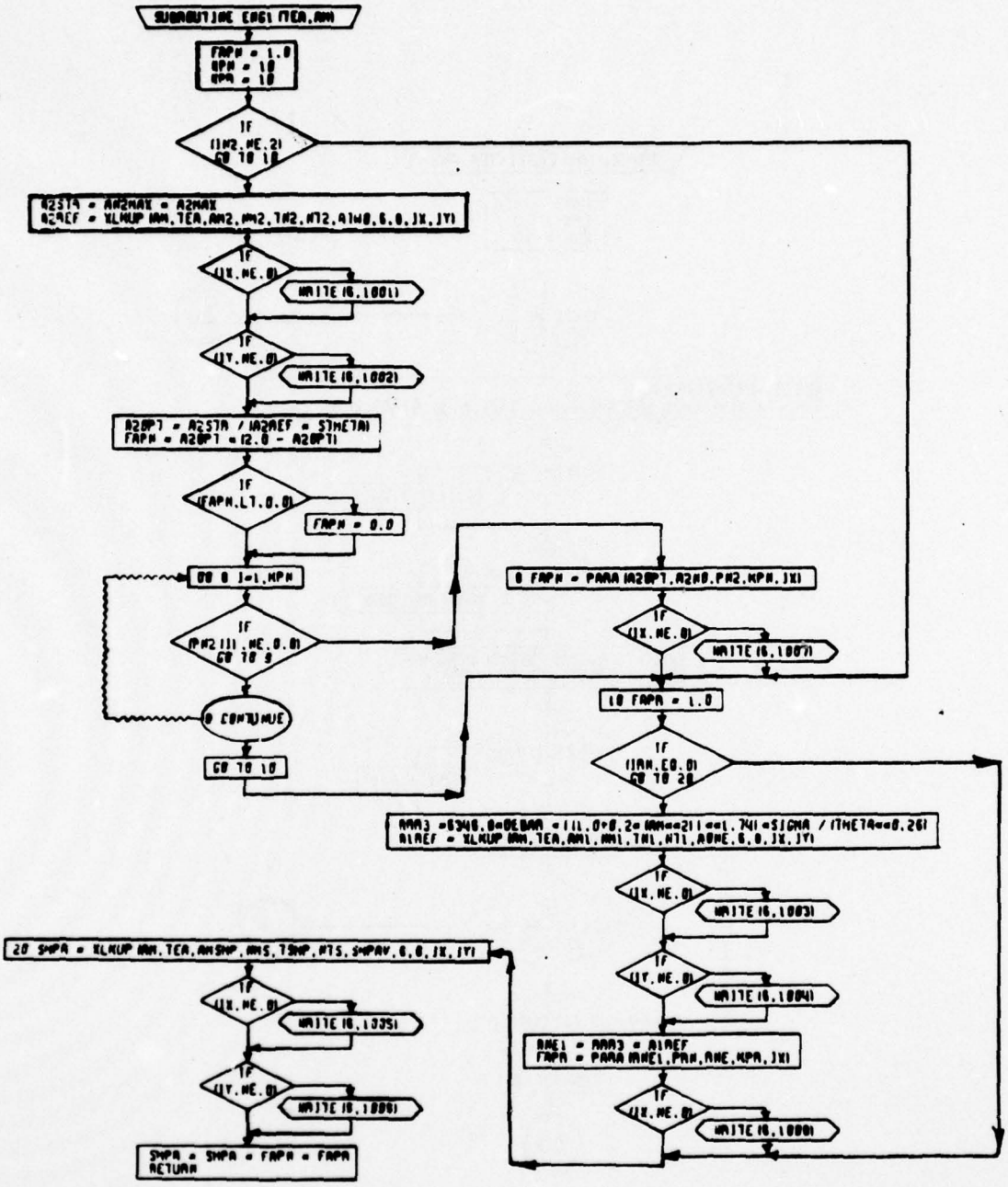

Figure 4-11. ENG 1 Subroutine, Flow Chart.

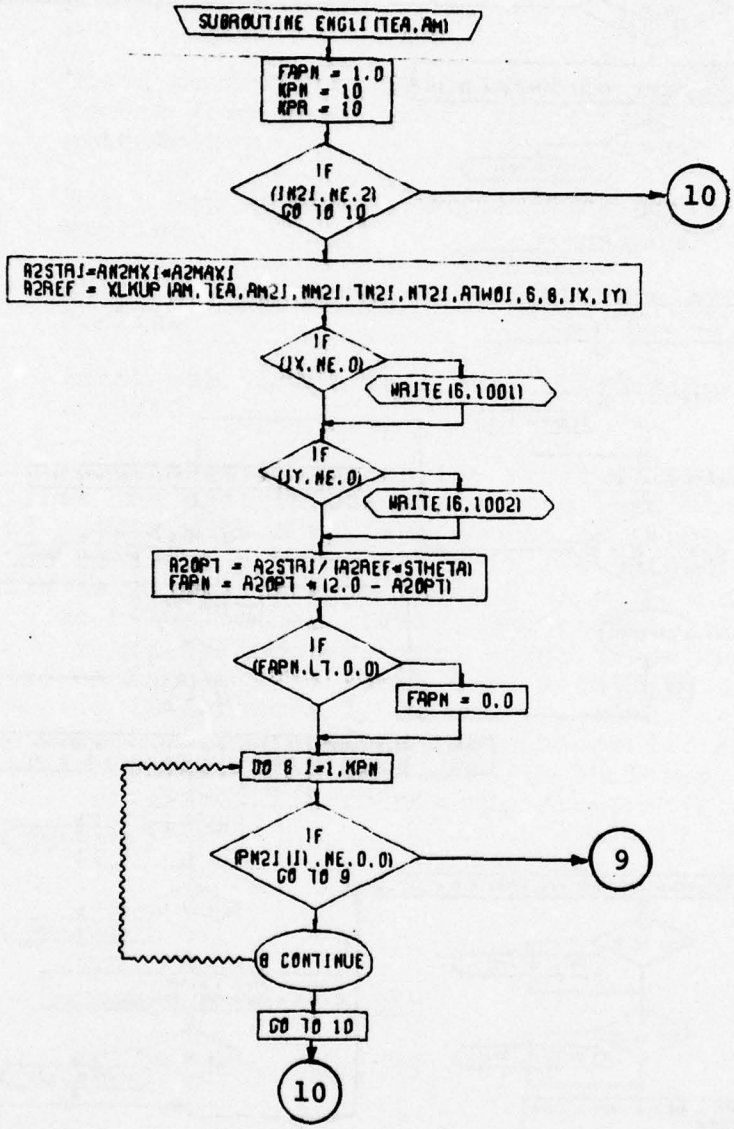

Figure 4-12. ENG 1 I Subroutine Flow Chart (Part 1 of 2).

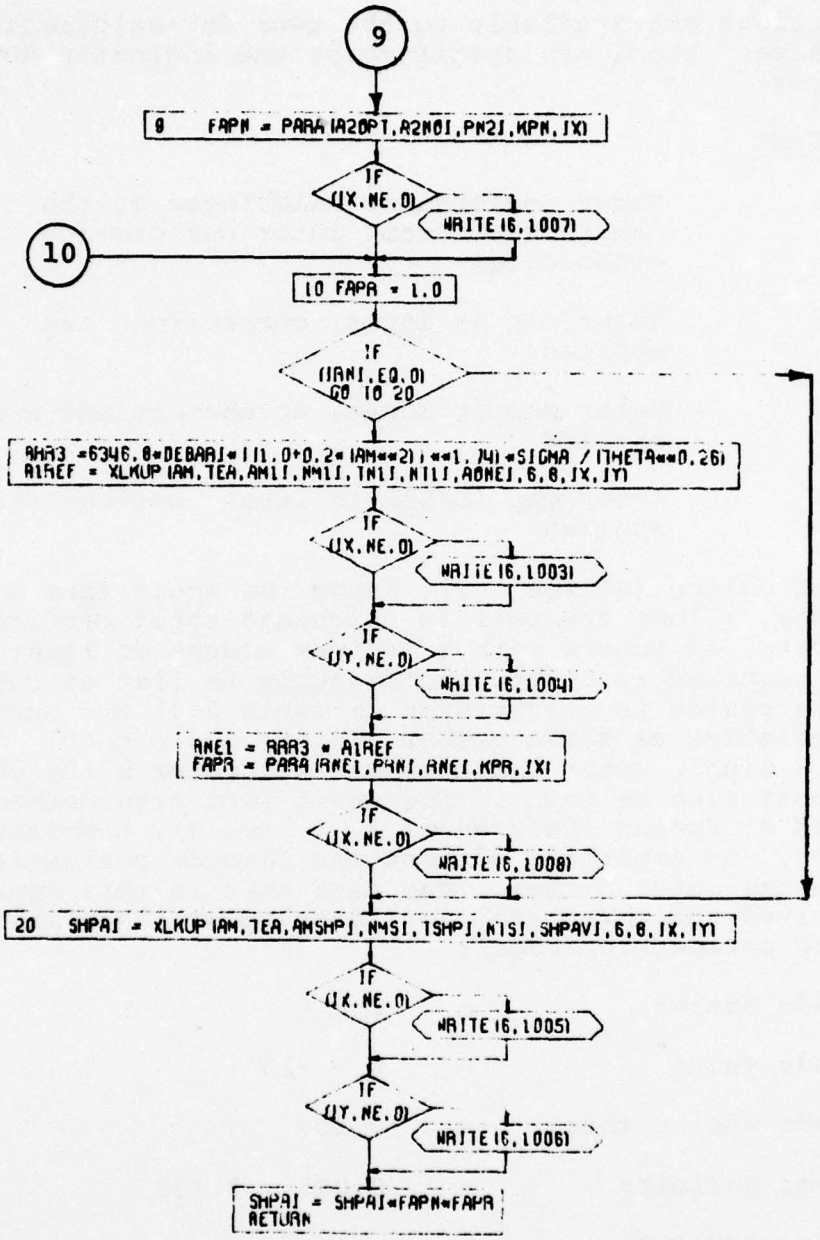

Figure 4-12. ENG 1 I Subroutine Flow Chart (Part 2 of 2).

4.5 ROTOR PERFORMANCE SUBROUTINE

Three options are available to the user for calculating rotor performance. These are specified by the indicator ROTIND as follows:

ROTIND	
1	Rotor performance calculated by the "short form aero" rotor performance methodology
2	Rotor map is input, corrections are applied
3	Rotor map is input, no corrections are applied
4	Rotor map (L/D_E) is input, corrections are applied

The first option (ROTIND = 1), using the short form aero methdology, allows the user to calculate rotor performance for a wide range of rotors with a minimum amount of input. The user is required to input a rotor cycle (a list of currently available cycles is illustrated in Table 2-4) and such blade characteristics as blade number, twist, and cutout. In the case of a single rotor helicopter, tail rotor blade characteristics must also be input. The short form aero methodology, developed at Boeing (References 2, 3, and 4), combines momentum theory and empirical corrections through coefficients found in the rotor cycles. The data used in this approach has been derived and correlated for rotors operating within the following parametric ranges:

Blade Number	=	2 - 6
Blade Twist	=	0 - -15°
Blade Root Cutout	=	0.20R
Rotor Solidity	=	0.055 - 0.150
Rotor Advance Ratio (μ)	=	0 - 0.4

No appreciable loss in accuracy is likely for cases involving more than six blades, less than 20 percent root cutout or a solidity lower than 0.055. The level of confidence will be reduced, however, for those cases in which the rotor parameters greatly exceed the ranges shown above. Figure 4-13 illustrates a typical comparison of short form aero predicted performance and flight test data.

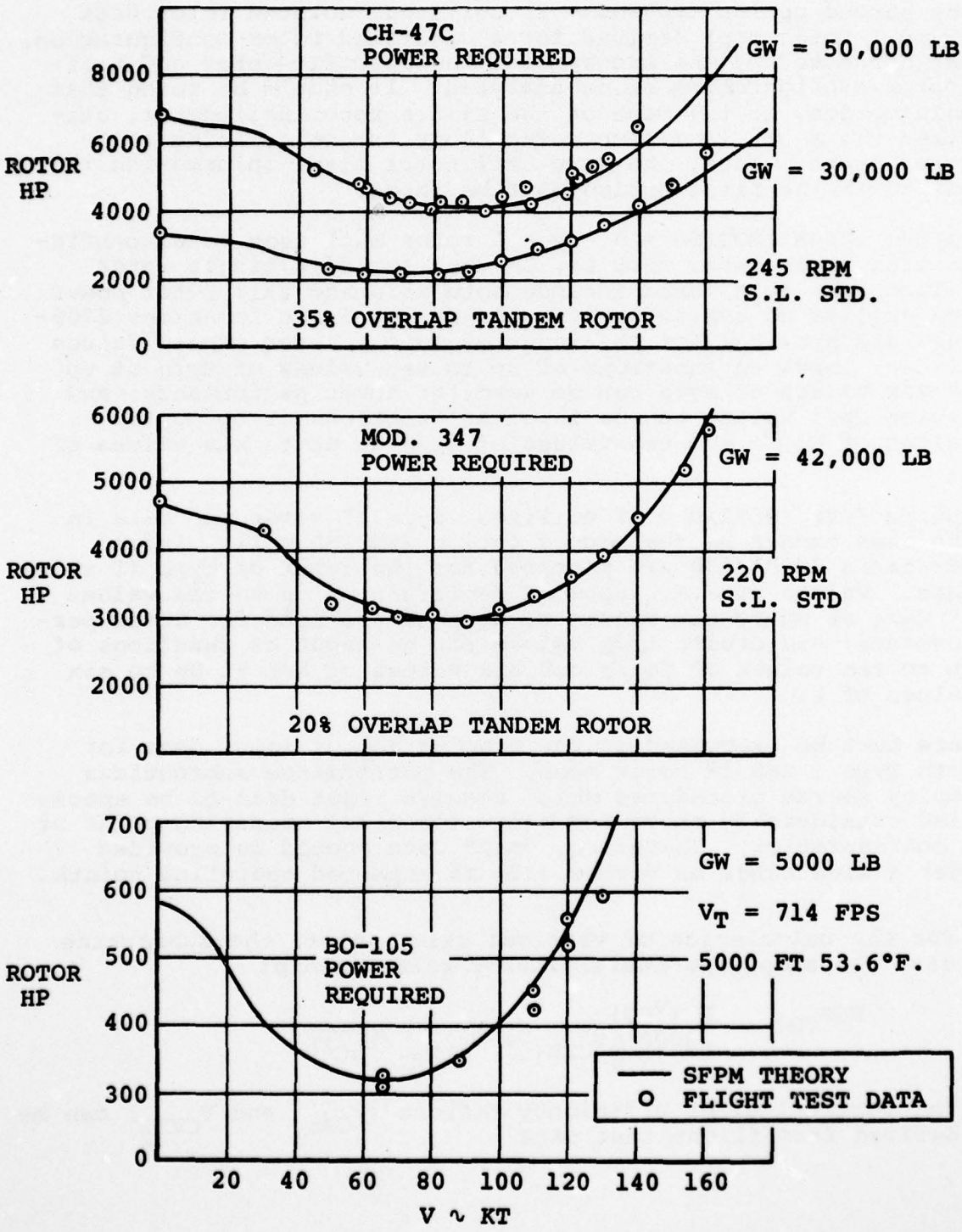

Figure 4-13. COMPARISON OF "SHORT FORM AERO" ROTOR PERFORMANCE AND FLIGHT TEST DATA

The second option (ROTIND = 2) utilizes isolated rotor data (Type I rotor map) derived for a specified rotor configuration, but corrected by the program for the specific rotor and helicopter configuration being analyzed. It should be noted that this option, in the case of the single rotor helicopter, utilizes the short form aero methodology for calculating tail rotor power. Thus, the same tail rotor blade information required in the first option must be input.

Option three (ROTIND = 3, Type I rotor map) uses total configuration rotor data; that is, in the case of a single rotor helicopter, this would include both main and tail rotor power and applies no corrections to the data. Input locations 2700-3410 are provided for the input of Type I rotor maps. Values of C_P/σ input as functions of up to ten values of C_T/σ at up to six values of M_{TIP} can be used for hover performance; and cruise C_P/σ values can be input as functions of up to ten values of C_T'/σ and ten values of C_X/σ at up to six values of μ.

Option four (ROTIND = 4) utilizes Type II rotor map data in the same manner as the second option (ROTIND = 2). Input locations 3420-4130 are provided for the input of Type II rotor maps. Values of F.M. input as functions of up to ten values of C_T/σ at up to six values of M_{TIP} can be used for hover performance; and cruise L/D_E values can be input as functions of up to ten values of C_T'/σ and six values of X/L at up to six values of μ.

Care must be exercised in the preparation of input data for both Type I and II rotor maps. The performance subroutines employ search procedures which require input data to be specified considerably above and below the final operating point of a configuration. Therefore, "map" data should be provided over a wide range on either side of expected operating points.

For the calculation of vertical climb power, the subroutine uses the simple potential energy relationship:

$$RHP_{VRC} = \frac{W\ (V_{RC})}{33000\ \left[V_{CEH_1} + V_{CEH_2}\ (V_{RC})\right]}$$

The vertical climb efficiency factors (V_{CEH_1} and V_{CEH_2}) can be derived from flight test data.

AD-A046 367 BOEING VERTOL CO PHILADELPHIA PA F/G 1/3
HESCOMP. THE HELICOPTER SIZING AND PERFORMANCE COMPUTER PROGRAM--ETC(U)
NOV 74 S J DAVIS, J S WISNIEWSKI N62269-74-C-0757
UNCLASSIFIED D210-10699-2 NL

2 OF 6
AD A046367



The quantity ALPHA D/L printed out in all forward flight performance segments reflects the propulsive thrust-lift vector of the main rotor. The simple sketch below illustrates the sign convention employed.

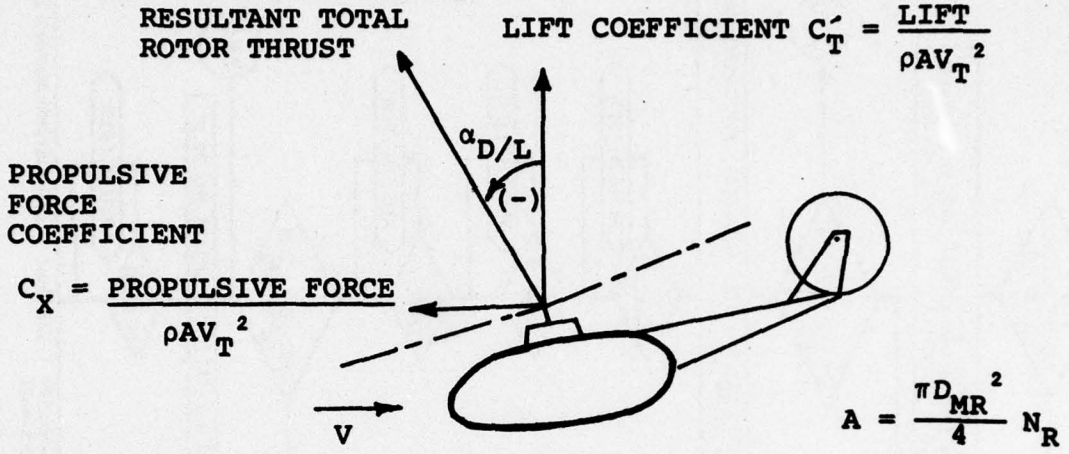

The flow chart for this subroutine is illustrated by Figure 4-14.

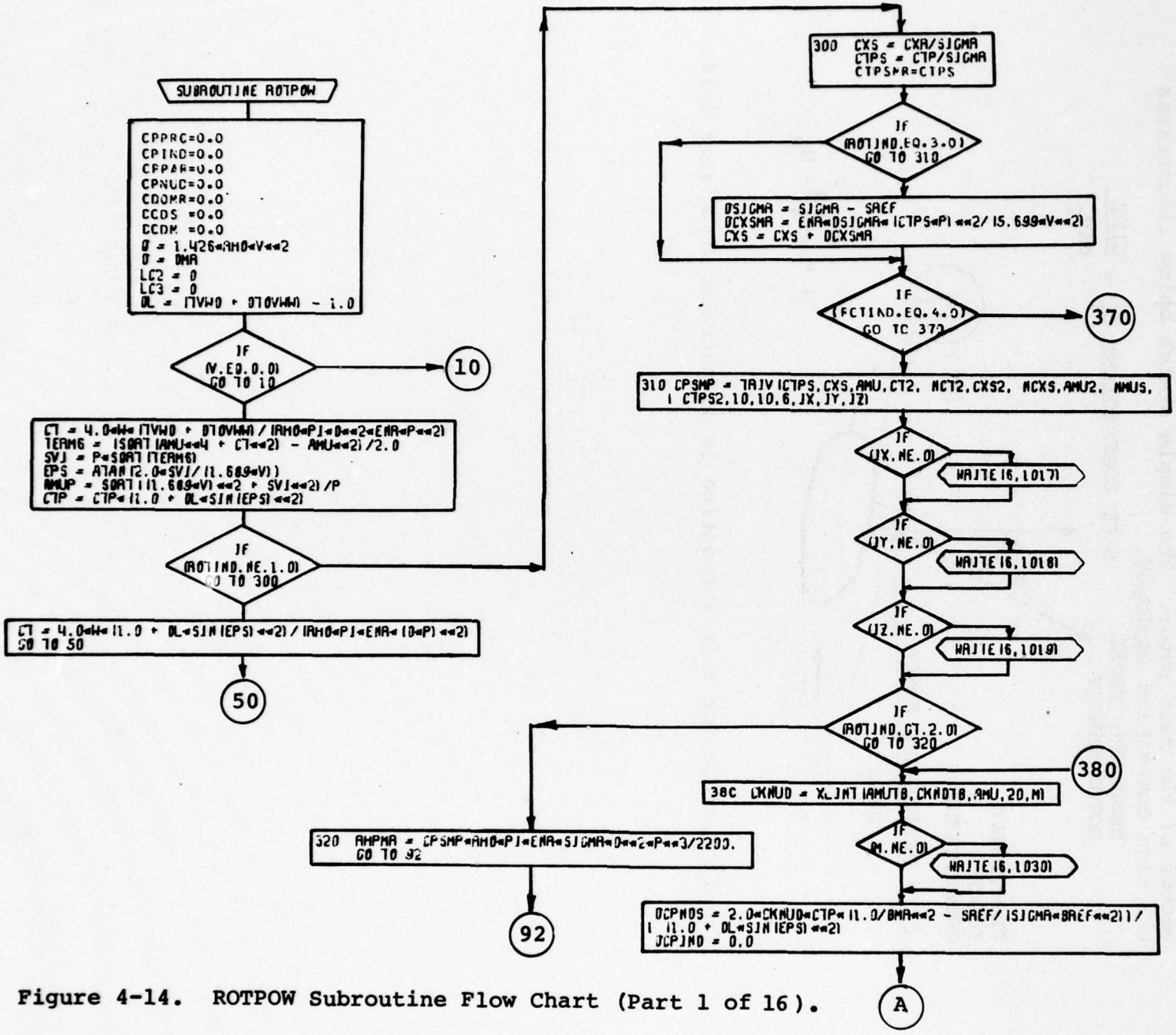

Figure 4-14. ROTPOW Subroutine Flow Chart (Part 1 of 16).

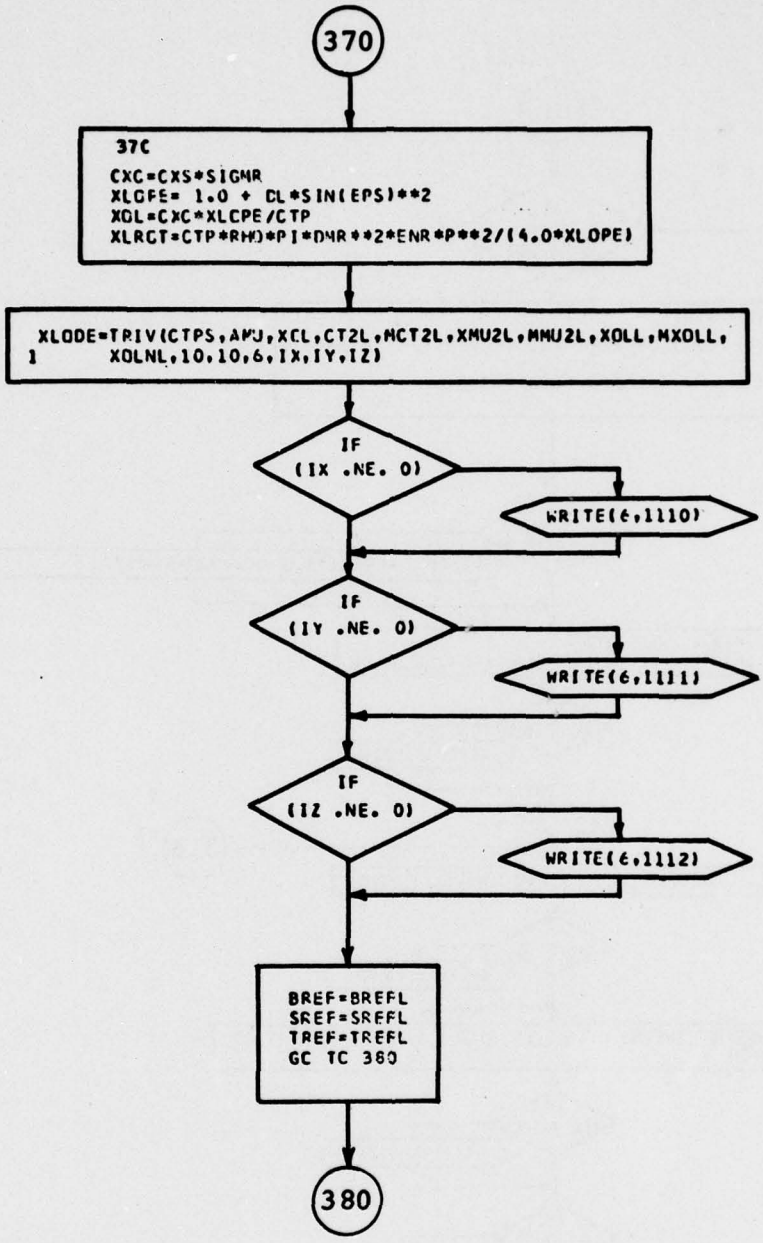

Figure 4-14. ROTPOW Subroutine Flow Chart (Part 2 of 16).

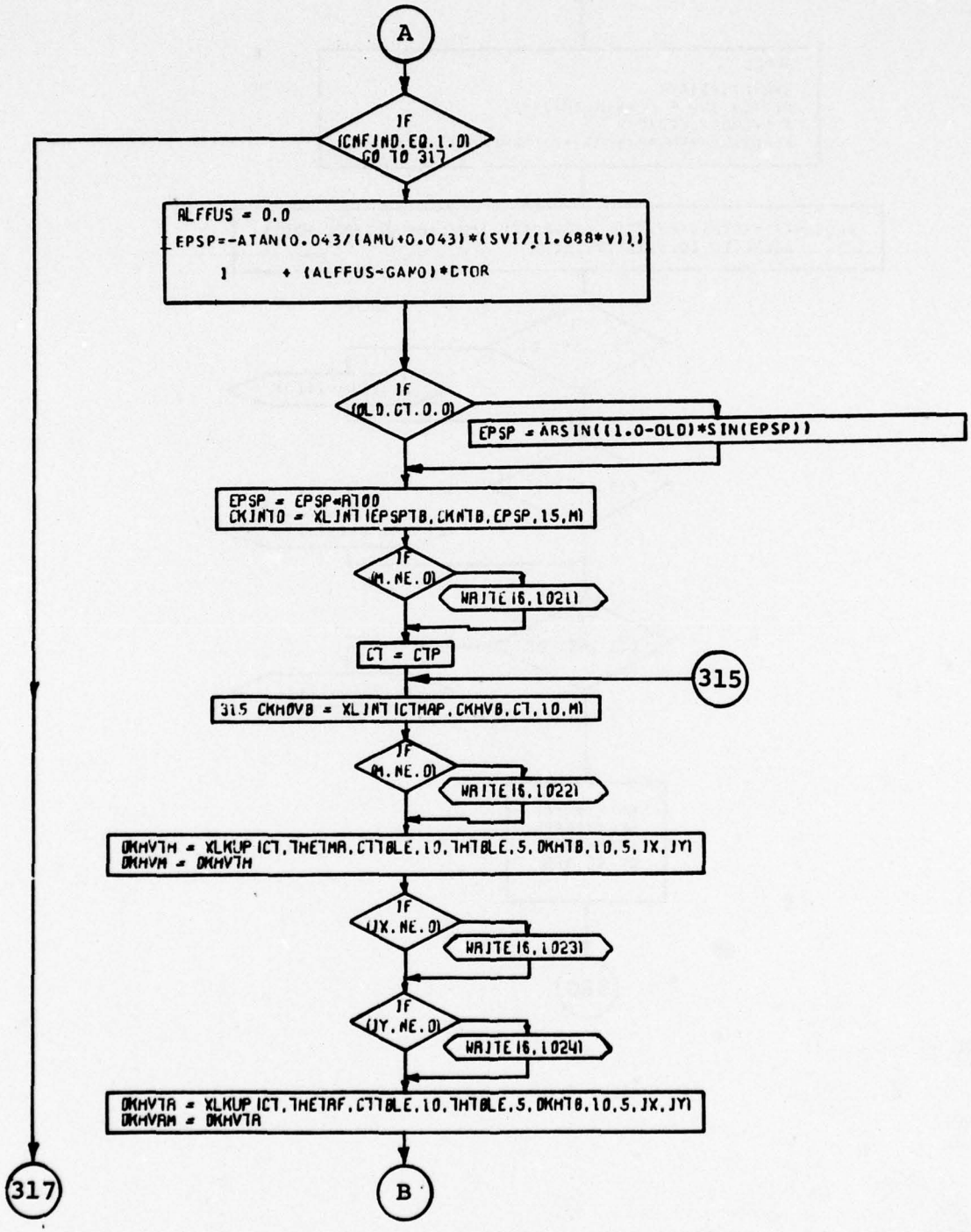

Figure 4-14. ROTPOW Subroutine Flow Chart (Part 3 of 16).

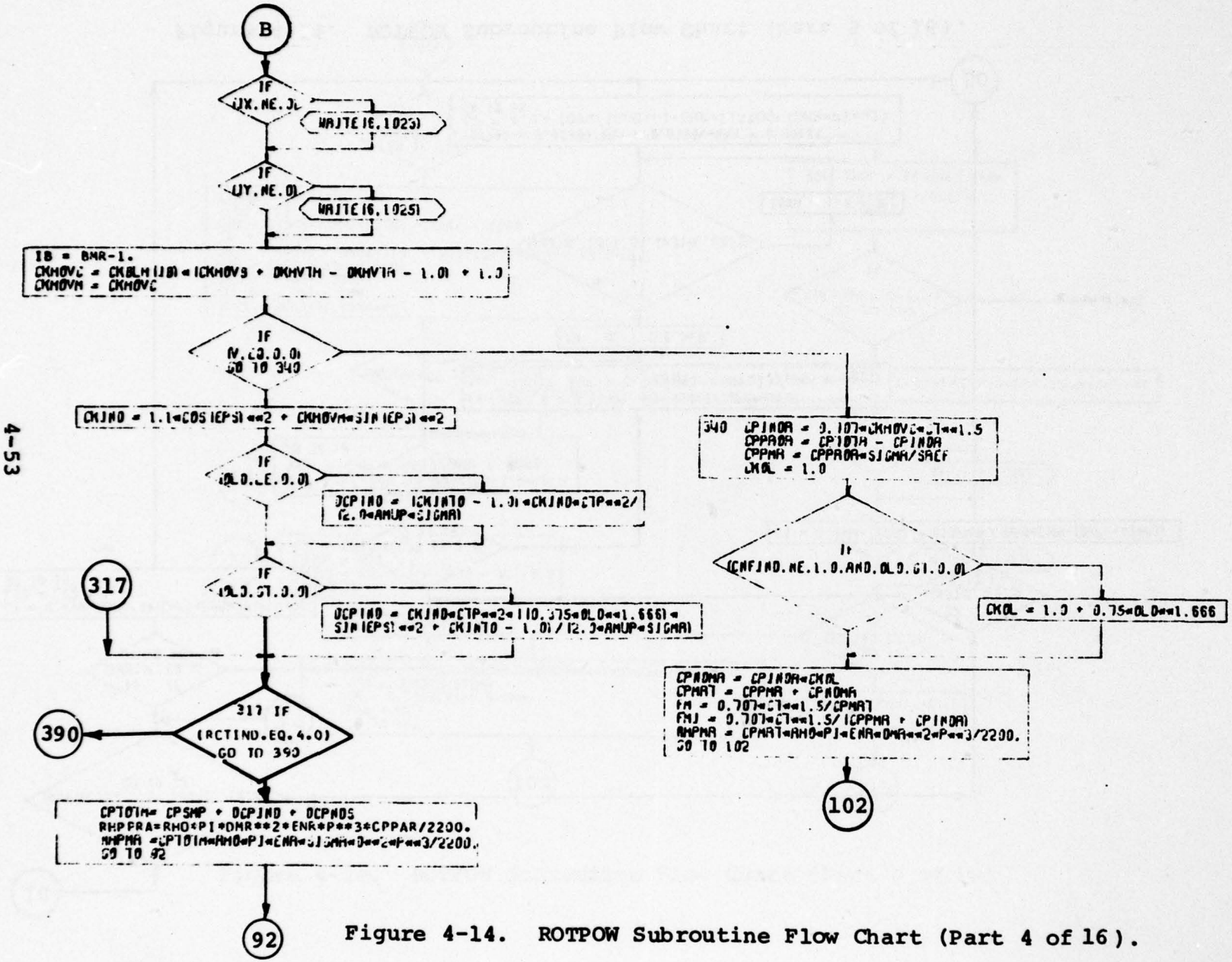

Figure 4-14. ROTPOW Subroutine Flow Chart (Part 4 of 16).

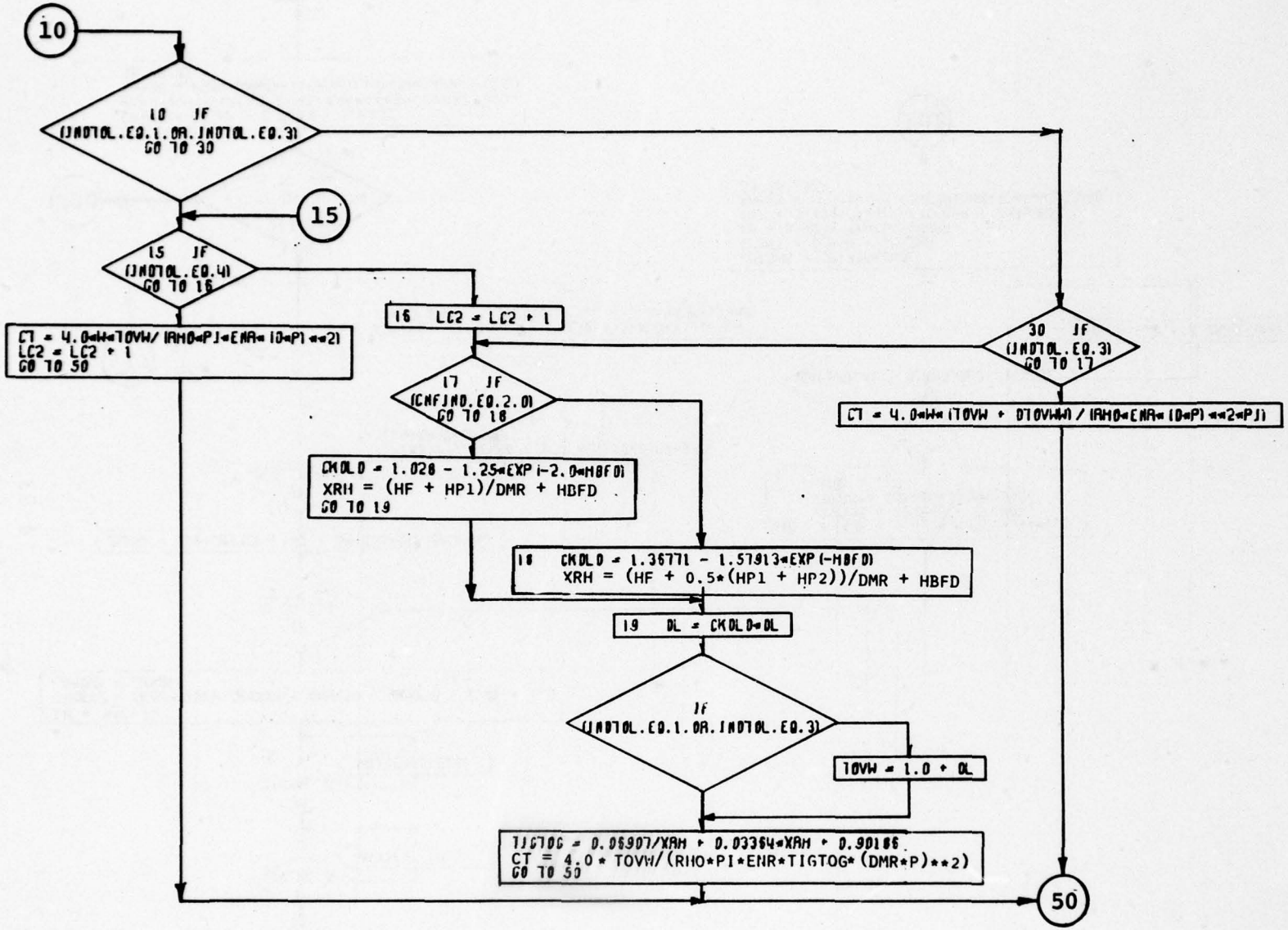

Figure 4-14. ROTPOW Subroutine Flow Chart (Part 5 of 16).

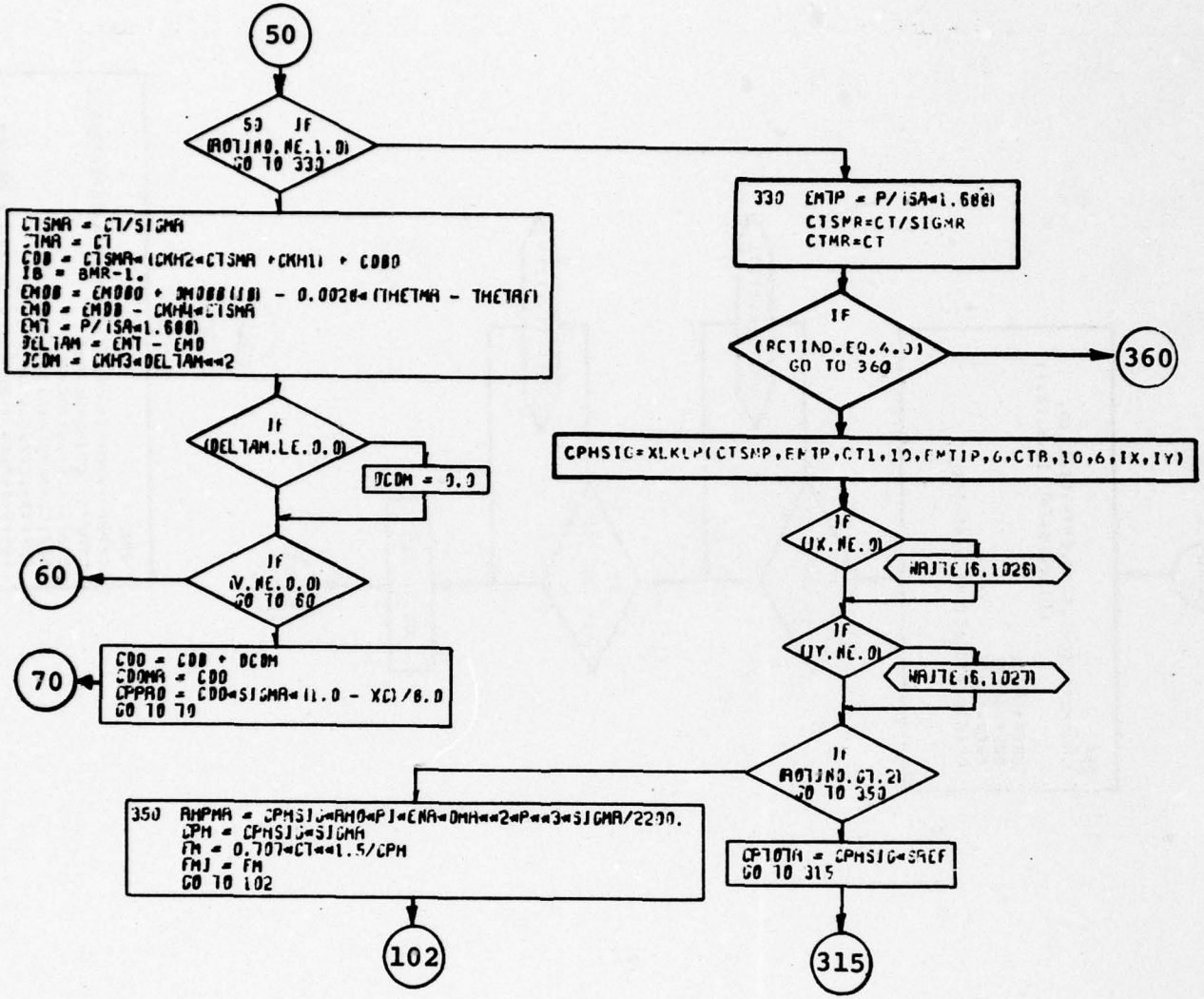

Figure 4-14. ROTPOW Subroutine Flow Chart (Part 6 of 16).

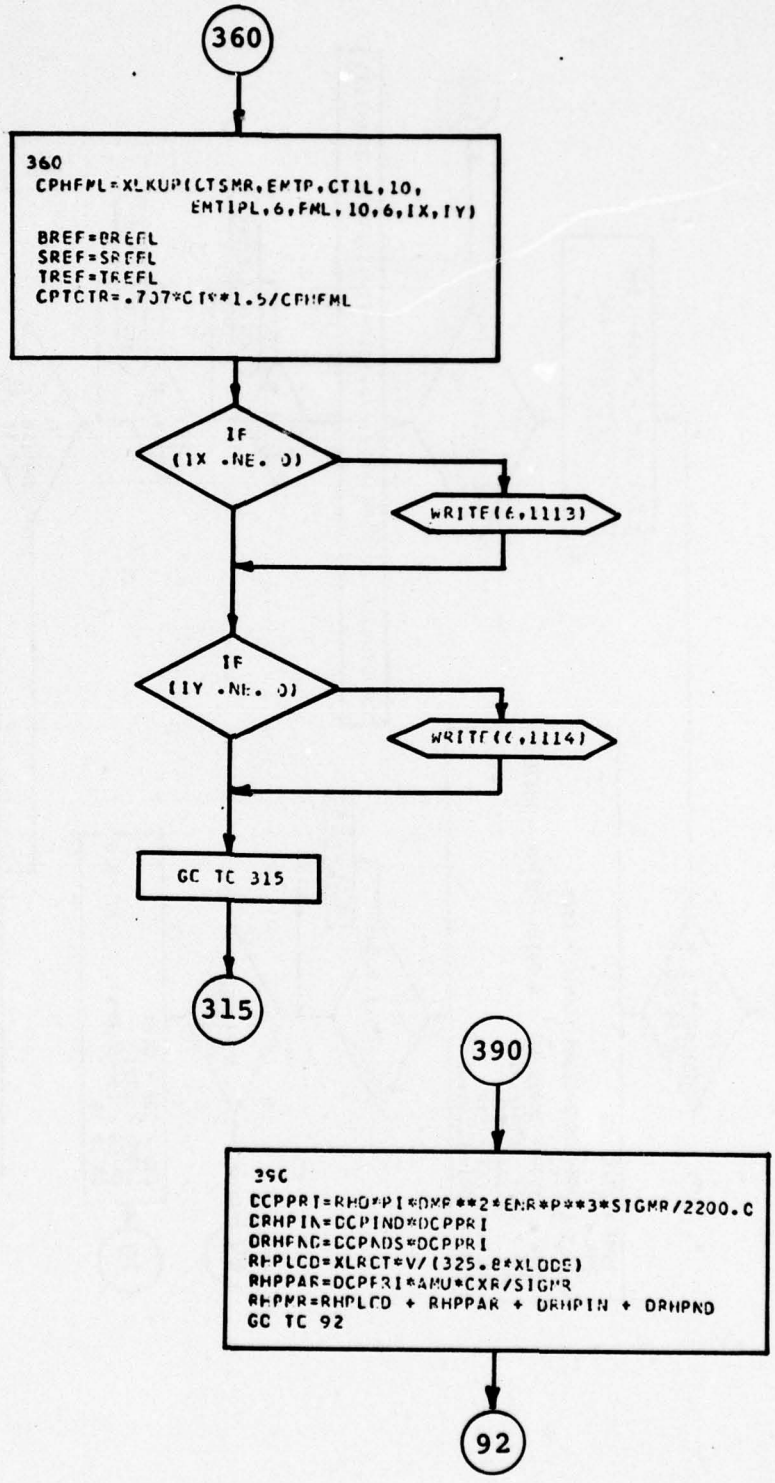

Figure 4-14. ROTPOW Subroutine Flow Chart (Part 7 of 16).

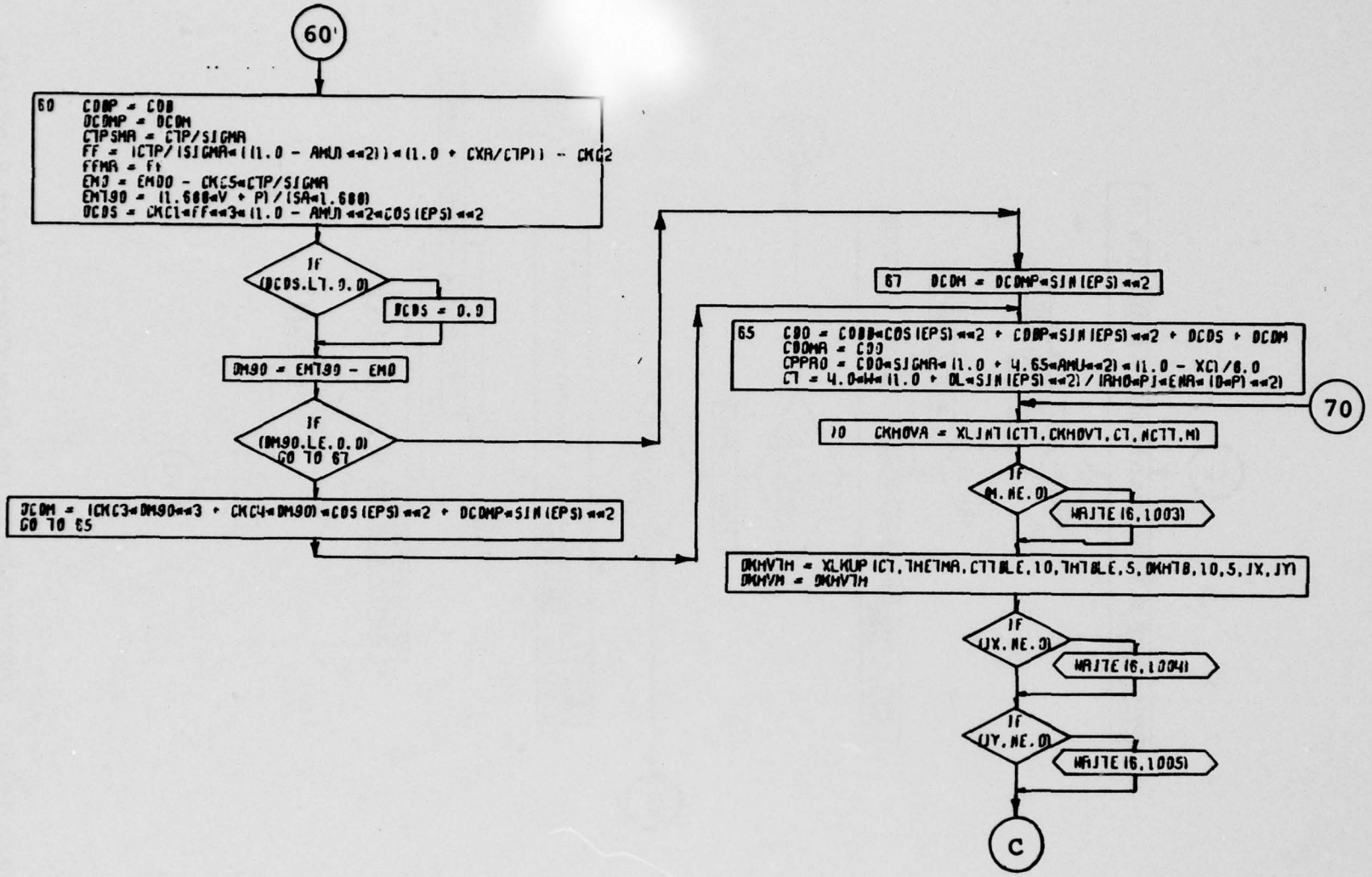

Figure 4-14. ROTPOW Subroutine Flow Chart (Part 8 of 16).

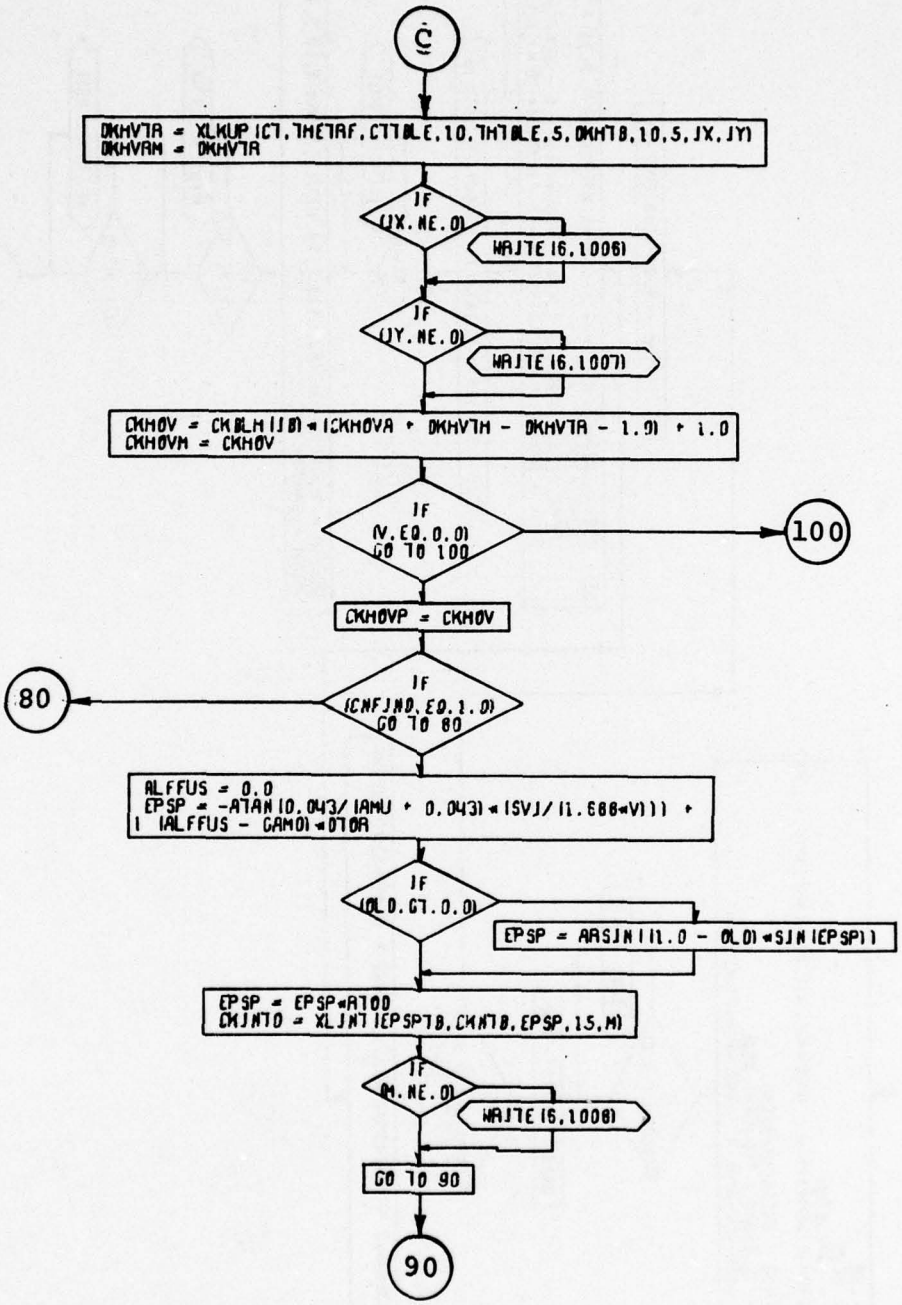

Figure 4-14. ROTPOW Subroutine Flow Chart (Part 9 of 16).

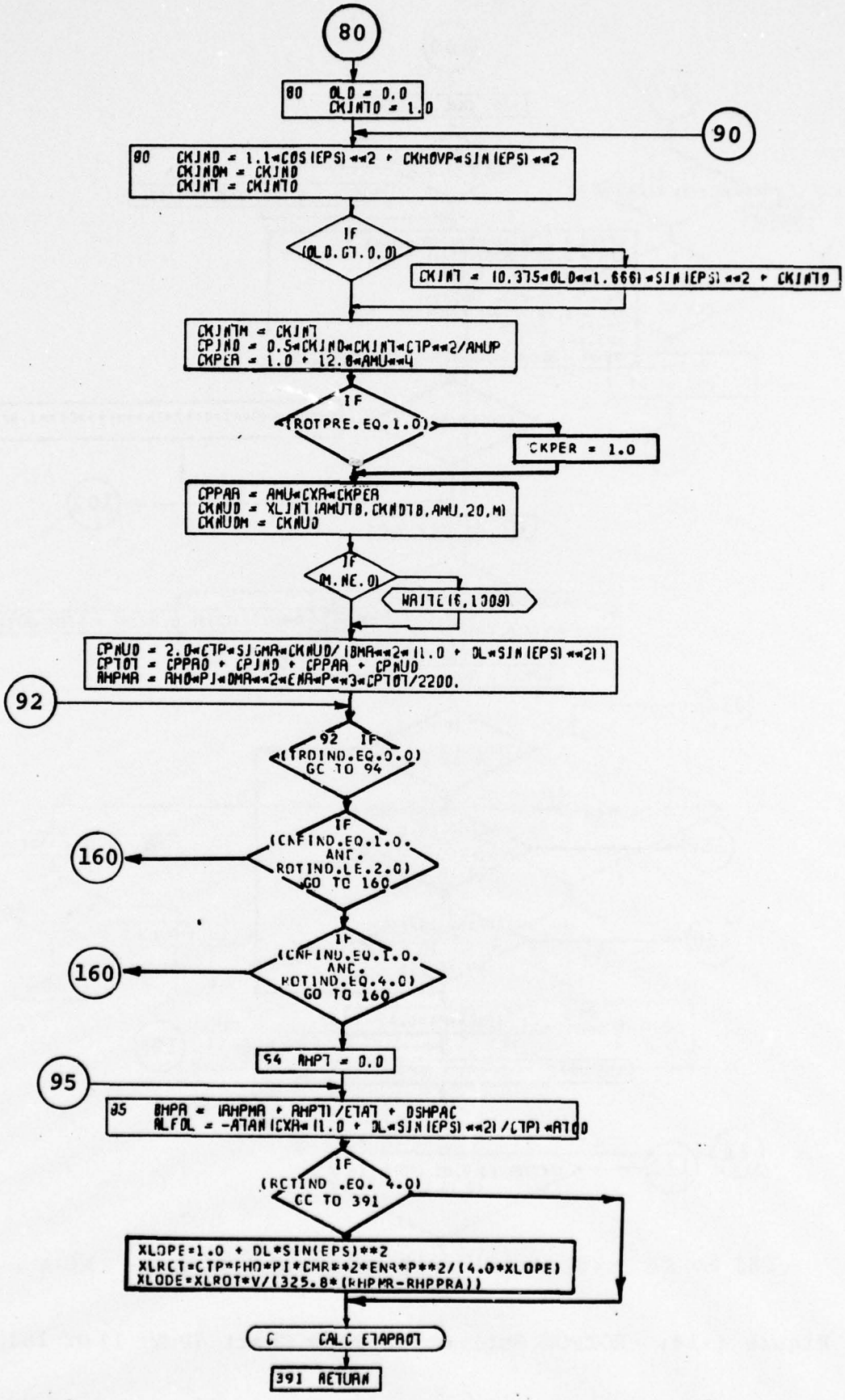

Figure 4-14. ROTPOW Subroutine Flow Chart (Part 10 of 16).

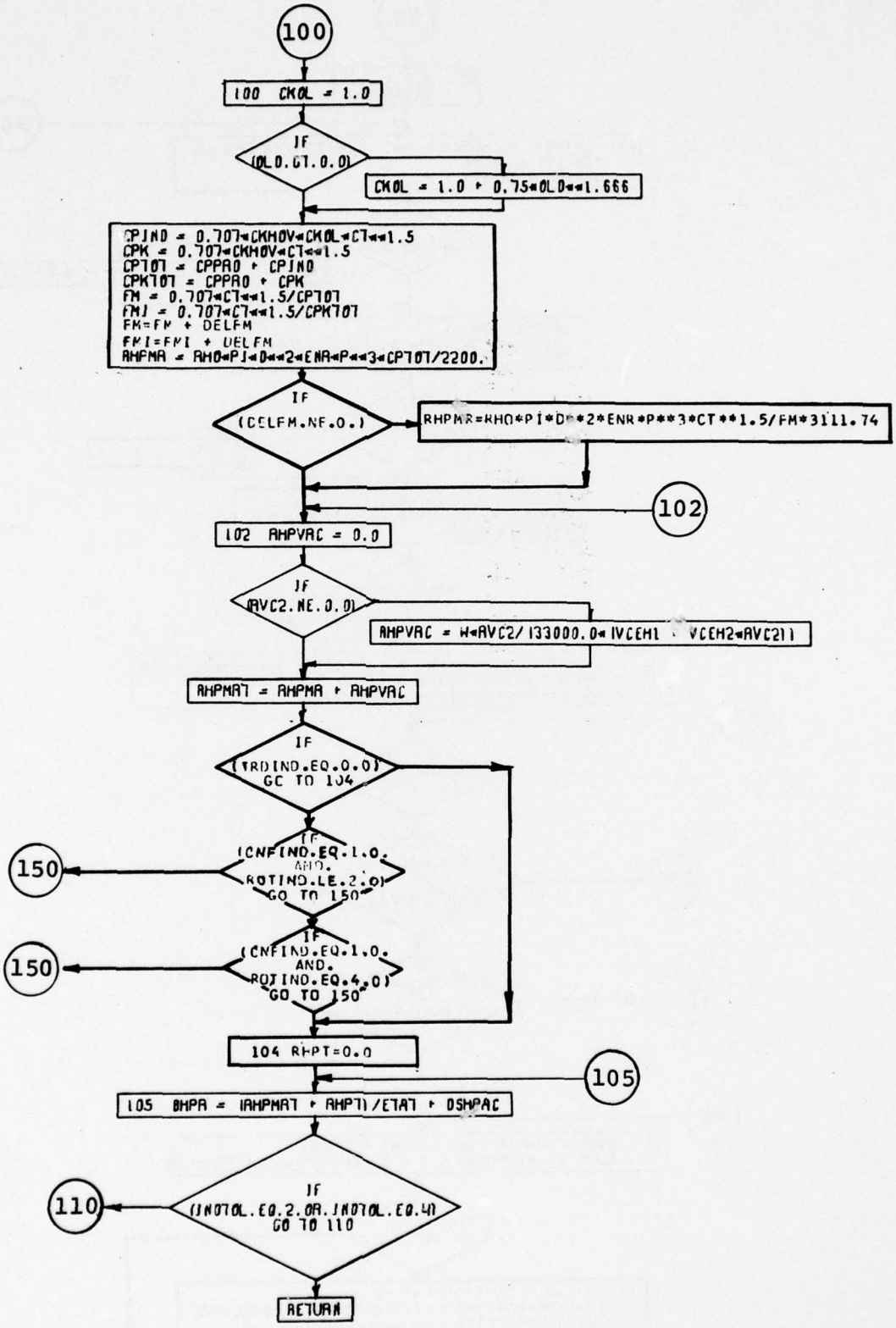

Figure 4-14. ROTPOW Subroutine Flow Chart (Part 11 of 16).

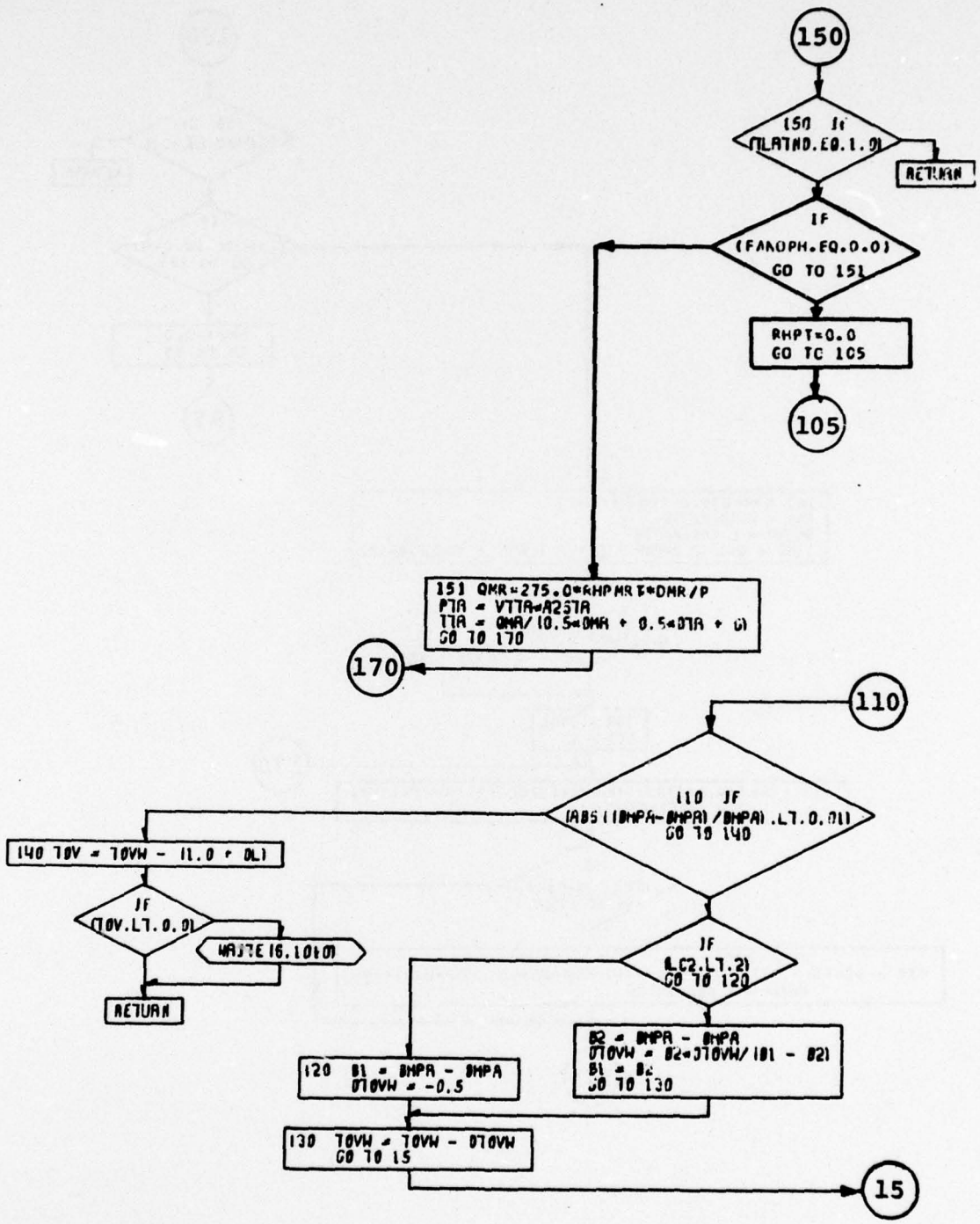

Figure 4-14. ROTPOW Subroutine Flow Chart (Part 12 of 16).

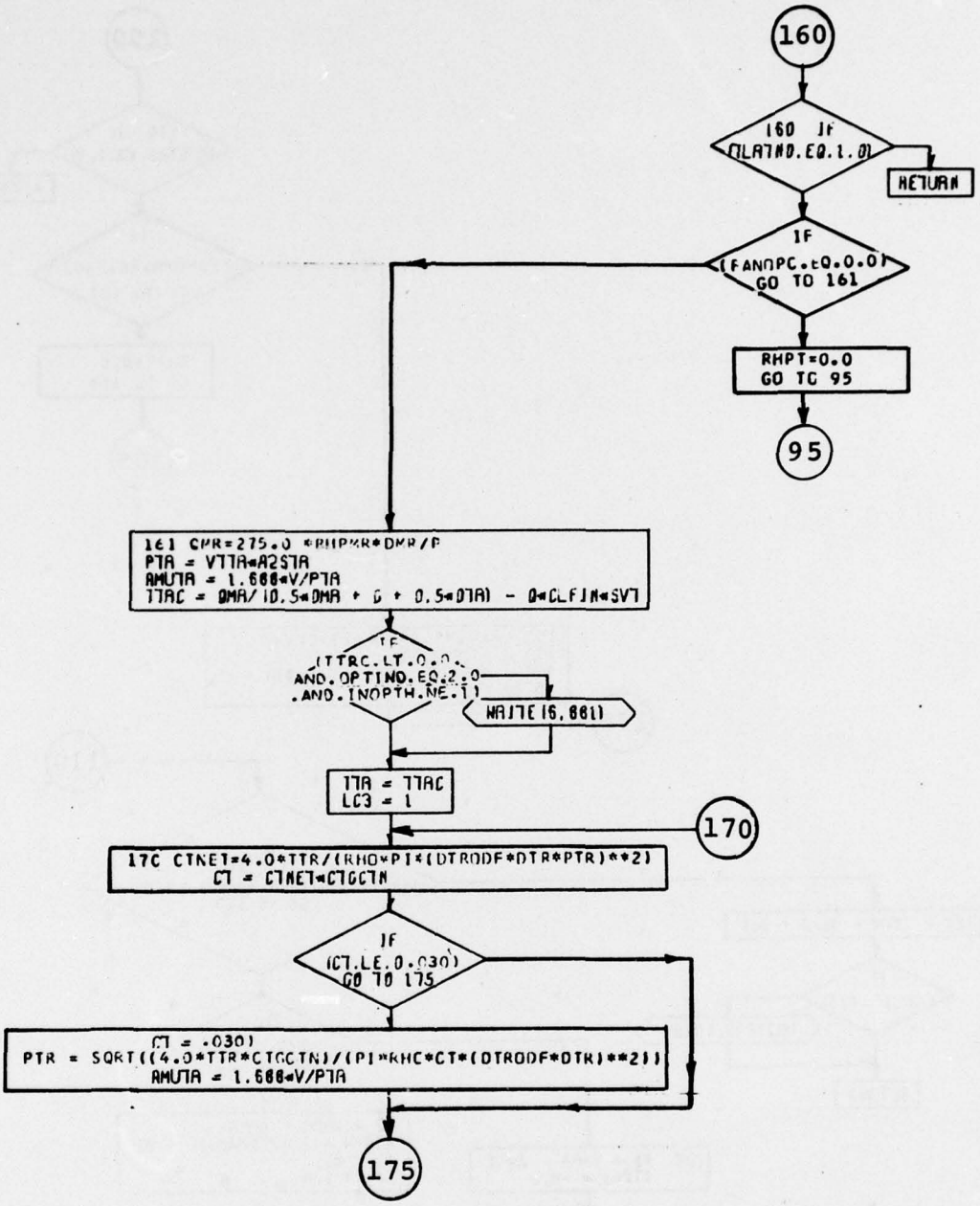

Figure 4-14. ROTPOW Subroutine Flow Chart (Part 13 of 16).

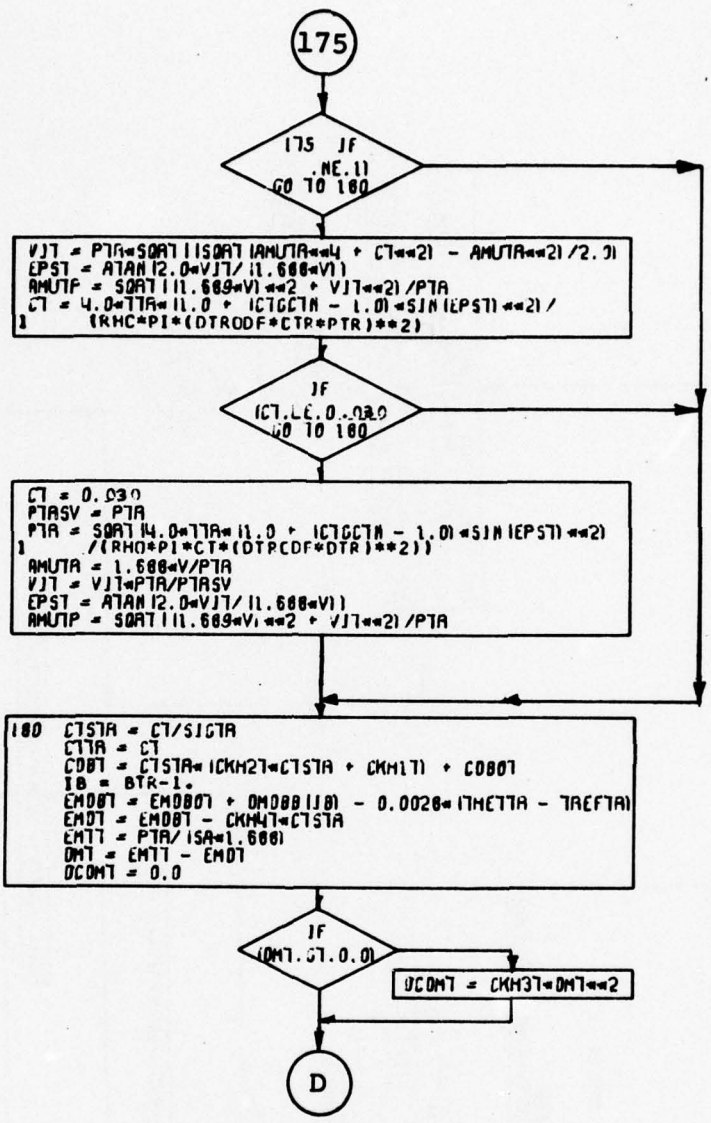

Figure 4-14. ROTPOW Subroutine Flow Chart (Part 14 of 16).

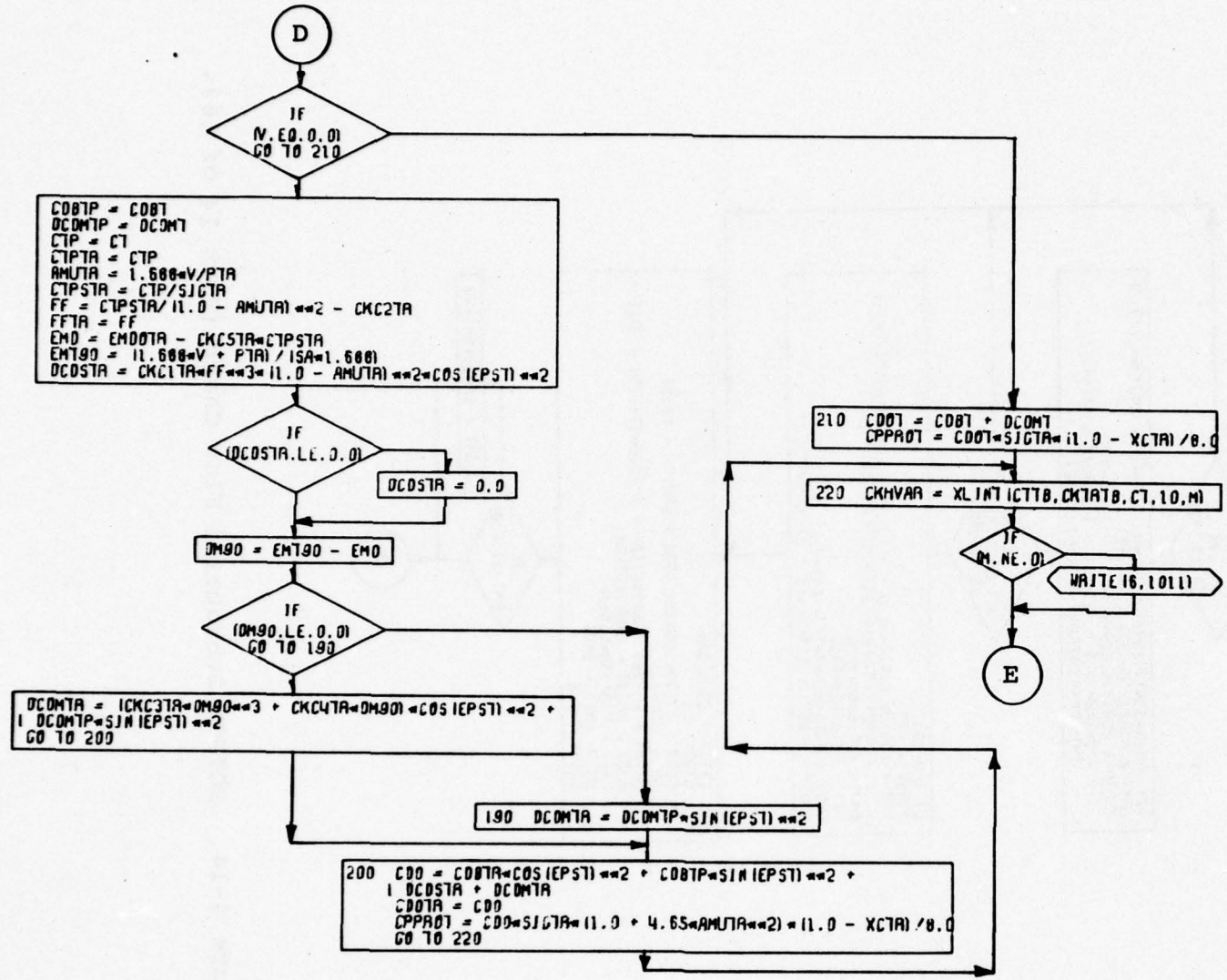

Figure 4-14. ROTPOW Subroutine Flow Chart (Part 15 of 16).

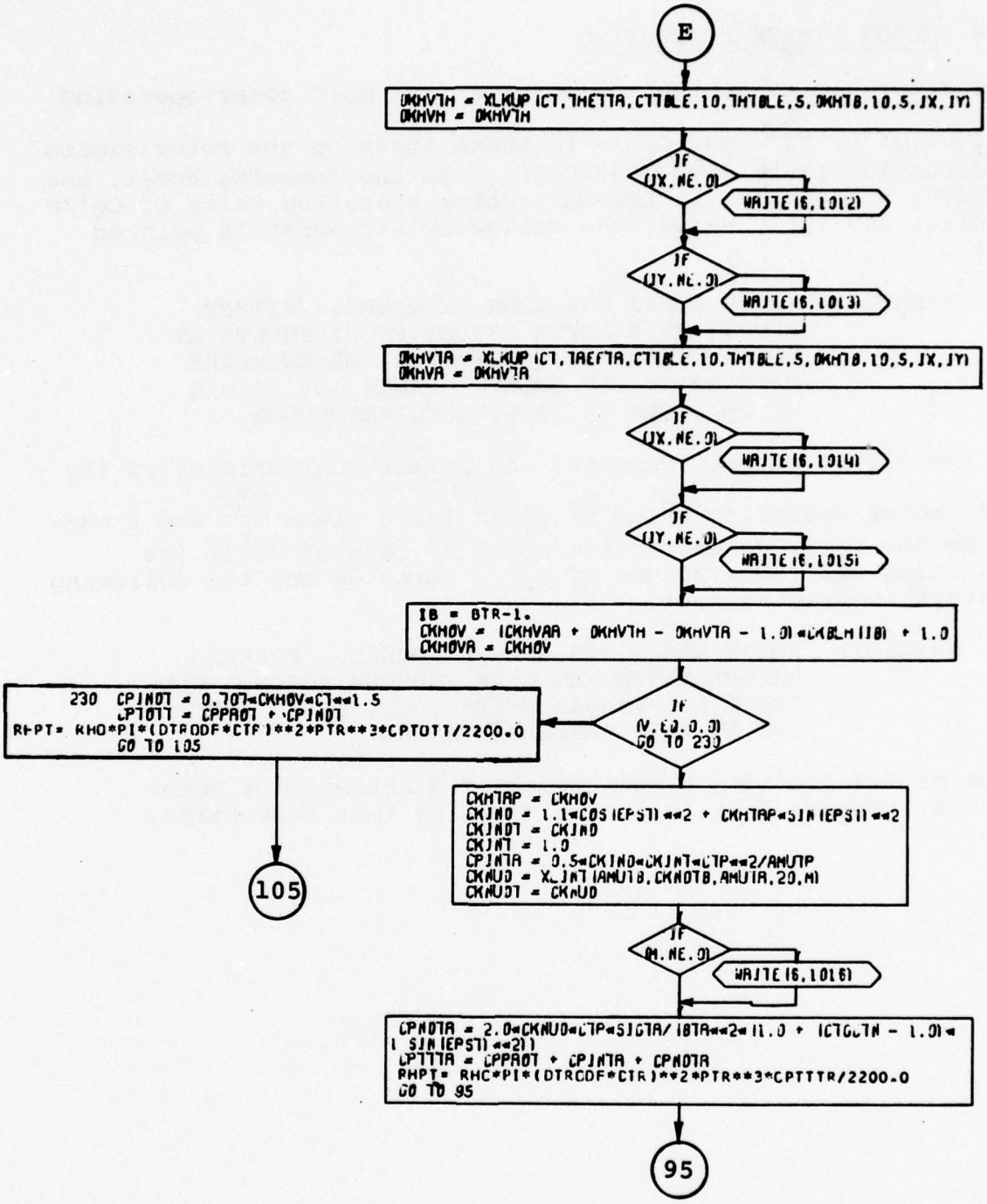

Figure 4-14. ROTPOW Subroutine Flow Chart (Part 16 of 16).

4.6 ROTOR LIMITS SUBROUTINE

The rotor limits subroutine compares the main rotor operating values of μ, $\frac{C_{X_R}}{\sigma}$, and C_T'/σ to those input in the rotor limits information table (LOC 0347-0395). In the takeoff, hover, and landing subroutine, if the main rotor operating value of C_T'/σ exceeds the table value, the following statement is printed out:

> WARNING: ROTOR LIMIT HAS BEEN EXCEEDED. EITHER REDUCE MAIN ROTOR THRUST REQUIREMENTS AT THESE OPERATING CONDITIONS, OR INCREASE MAIN ROTOR TIP SPEED. CHECK ALL VALUES OF C_T/SIGMA IN THIS PERFORMANCE LEG.

In the climb, cruise, descent, and loiter subroutines, if the main rotor operating value of C_T'/σ for a given $\frac{C_{X_R}}{\sigma}$ and μ exceeds the table value, cruise speed is reduced until the operating and table values of C_T'/σ coincide and the following message is printed out:

> WARNING: ROTOR LIMIT HAS BEEN EXCEEDED. FORWARD FLIGHT SPEED HAS BEEN REDUCED ACCORDINGLY. CHECK ALL VALUES OF TAS, MU, C_T'/σ, AND CXR IN THIS PERFORMANCE LEG.

Section 7.3 provides a more detailed discussion of Rotor Limits. Figure 4-15 is a flow chart of this subroutine.

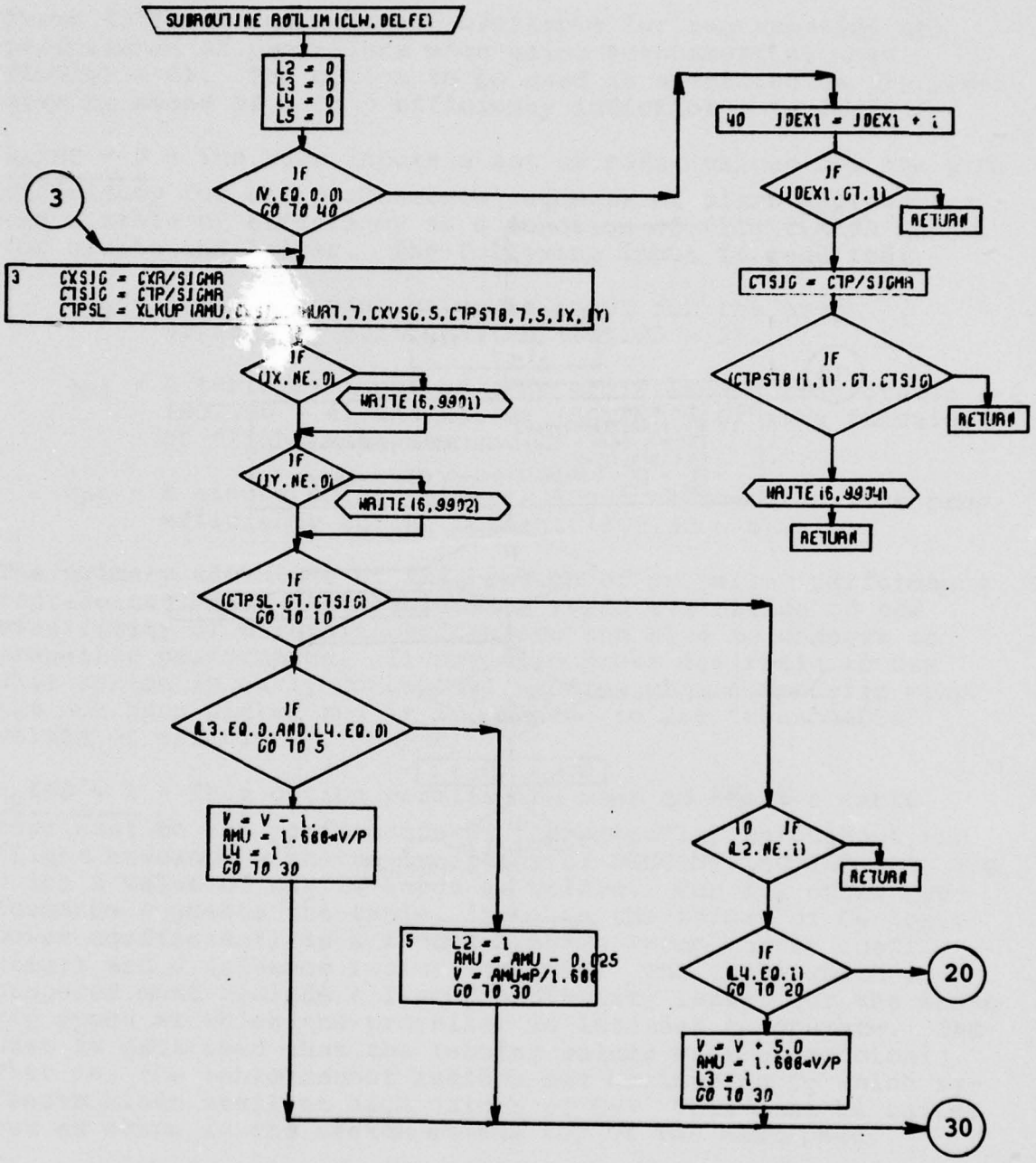

Figure 4-15. ROTLIM Subroutine Flow Chart (Part 1 of 2).

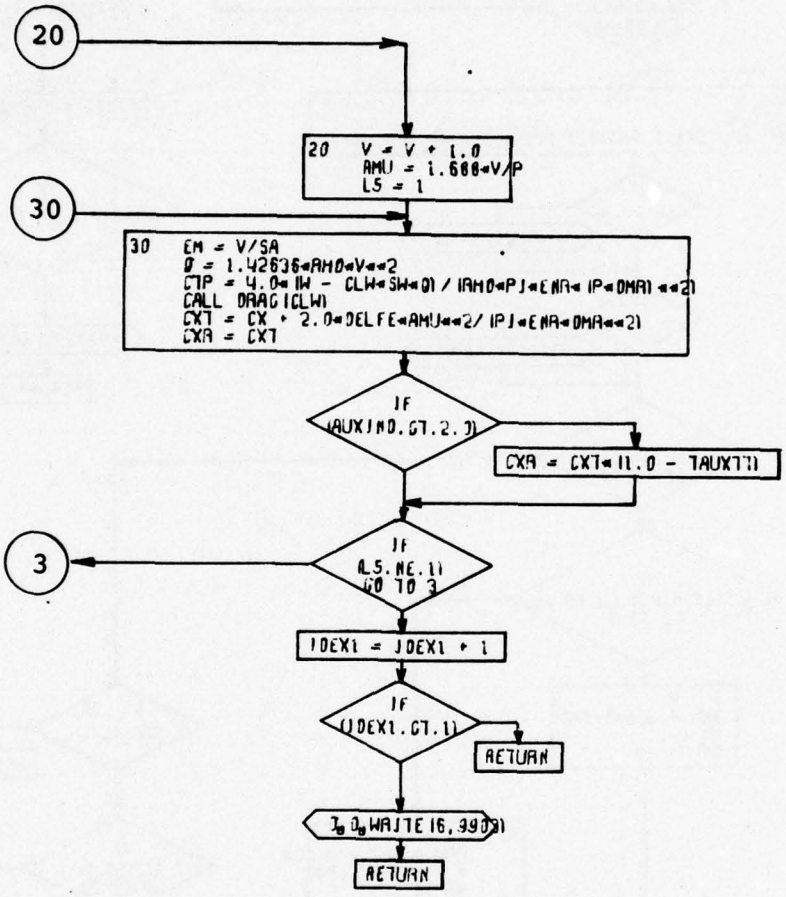

Figure 4-15. ROTLIM Subroutine Flow Chart (Part 2 of 2).

4.7 PROPELLER PERFORMANCE CALCULATIONS

Three different options are available for representing the performance of propellers when using turboshaft engines (ENGIND = 0). The option to be used is specified to the program by means of a prop efficiency indicator - "η_pIND".

η_pIND = 0 - The user inputs a set of point values for the prop efficiency for the performance segments of climb and descent and a table of efficiency as a function of flight Mach number for cruise and loiter. The following input is required:

η_{P3} - A single point value is input for the prop efficiency during climb (SGTIND = 3).

η_{P4} - A table is input of prop efficiency during cruise (SGTIND = 4) and Loiter (SGTIND = 6) as a function of flight Mach number.

η_{P5} - A single point value is input representing the prop efficiency during Descent (SGTIND = 5).

The primary advantage of this option of propeller performance representation is that it permits rapid evaluation of the sensitivity of aircraft performance and size to changes in propeller performance. It may also prove desirable to use this option in early conceptual studies when a specific prop has not been picked and it is desired to use "reasonable" values of efficiency.

η_pIND = 1 - This option permits the user to input a table representing the performance of the propeller throughout the flight envelope with the exception of DESCENT (SGTIND = 5) for which a value of η_{P5} is input as before. For all other performance segments the table, input in the format of C_P (prop power coefficient) as a function of C_T (prop thrust coefficient) and J (advance ratio), is used. The table which is prepared must include all compressibility losses for the known tip speed at which the propeller is intended to operate. The user is cautioned that the tabular values must be monotonic. That is, the table cannot include the maximum in C_T which reflects blade stall at high values of C_P. This must be faired out as shown in the sketch at the top of the next page.

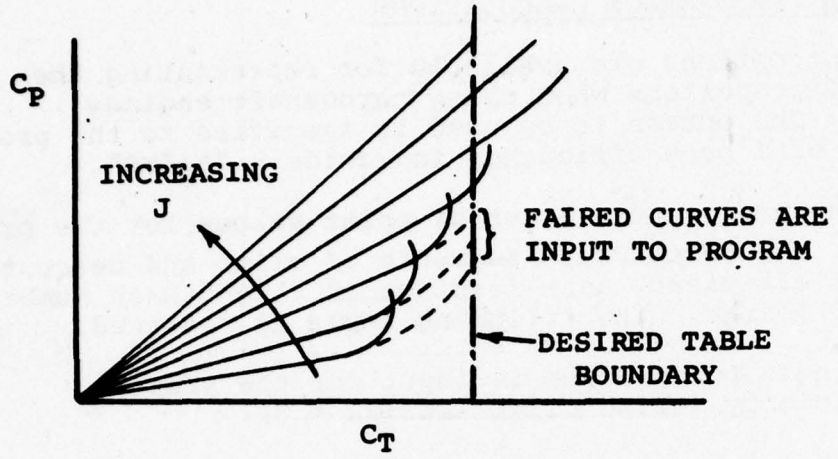

The advantage of this option is that it permits the user to input the performance of a real propeller as determined from test data.

η_pIND = 2 - Through use of this option the program will automatically calculate the performance of a wide variety of V/STOL propellers. The user need only specify the number of blades (3 or 4), the activity factor per blade, and the integrated lift coefficient, C_{L_i}. The method used for the calculation of propeller performance is the "short method" originated at the Curtiss-Wright Corporation's Propeller Division (Reference 10). The method involves the use of a set of equations which can be developed from strip theory. These equations permit the propeller performance maps (C_p, C_T, J) to be transformed into an "equivalent" lift-drag polar for the propeller. Conversely, the lift-drag polars, once developed, can be used with the equations to predict the propeller performance. For incompressible flow, the "equivalent" lift-drag polar which is used depends only on the value of C_{L_i} being considered. That is, for a given C_{L_i} the same polar can be used to accurately represent the performance of props with a wide variation in activity factor and number of blades and for a wide range of C_p and J. For compressible flow conditions, the curves correlate very well on the basis of the value of helical Mach number at the 3/4 radial station. The equivalent lift-drag polars which are contained in the program were developed from detailed strip analysis calculations for cruise These detailed calculations covered the following range of parameters:

Number of blades:	3 and 4
Activity factor/blade:	60 → 220
Integrated lift coefficient, C_{L_i}:	0.15 → 0.7

Although the user is permitted to input values of activity factor and C_{L_i} greater than (or less than) those shown above, the level of confidence in the predictions is reduced when values for those parameters are outside the range used in the detailed calculations.

Figure 4-16 is characteristic of the level of accuracy obtained from the short method when compared to the detailed calculations.

This option will calculate the propeller performance for all mission performance segments except Descent (SGTIND = 5). For Descent, the user inputs a value for η_{P5}. Figure 4-17 is a flow chart of subroutine THRUST which calculates the propeller thrust available for known values of power and flight speed. Figures 4-18 and 4-19 are flow charts for subroutines POWER and POWERI in which the power required for specified thrust and flight speed is calculated. These subroutines make use of propeller equivalent lift-drag polars, as mentioned above, to calculate the performance of the propeller. The polars are developed in the main control loop for the particular value of integrated lift coefficient, C_{L_i}, being studied from the following equations:

$\gamma = \tan^{-1} (C_D/C_L)$ = function of M_H, C_L, C_{L_i}

M_H = helical Mach number @ 3/4 r/R

C_L = equivalent lift coefficient at which prop is operating

C_{L_i} = integrated lift coefficient of prop

For cruise

$$\gamma = a_o + a_1 C_{L_i} + a_2 C_{L_i}^2$$

a_o, a_1, and a_2 are coefficients stored in the program and are functions of M_H and C_L

The coefficients a_o, a_1, a_2, are listed in Table 4-3.

The calculations of propeller performance for η_pIND = 1 and 2 are based on the assumption that the engines are interconnected by a cross shaft. That is, if engines are shut down during cruise and loiter the remaining power is evenly distributed to all of the propellers.

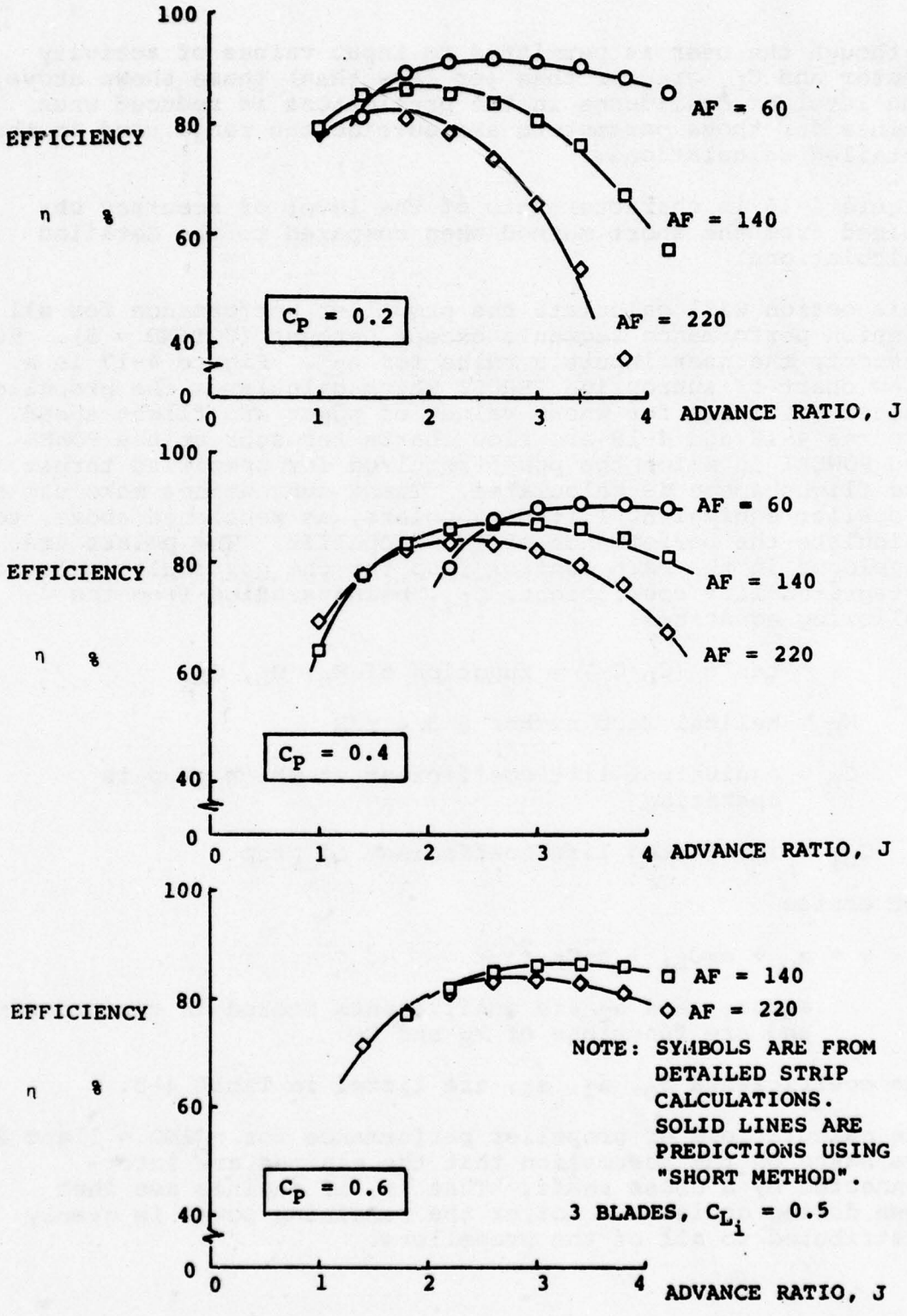

Figure 4-16. Comparison of "Short Method" and Detailed Calculations for Propeller Cruise Efficiency.

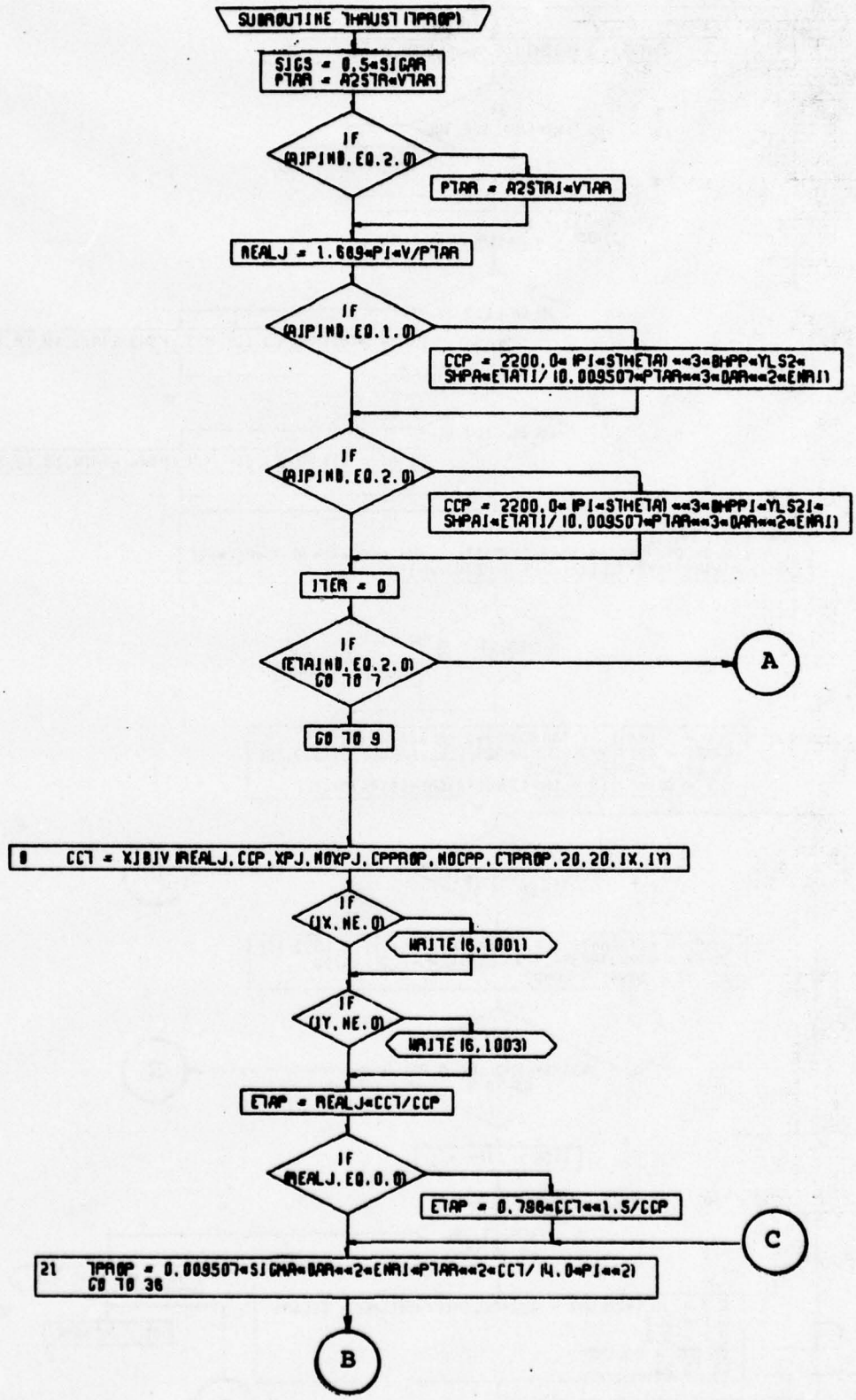

Figure 4-17. THRUST Subroutine Flow Chart (Part 1 of 4).

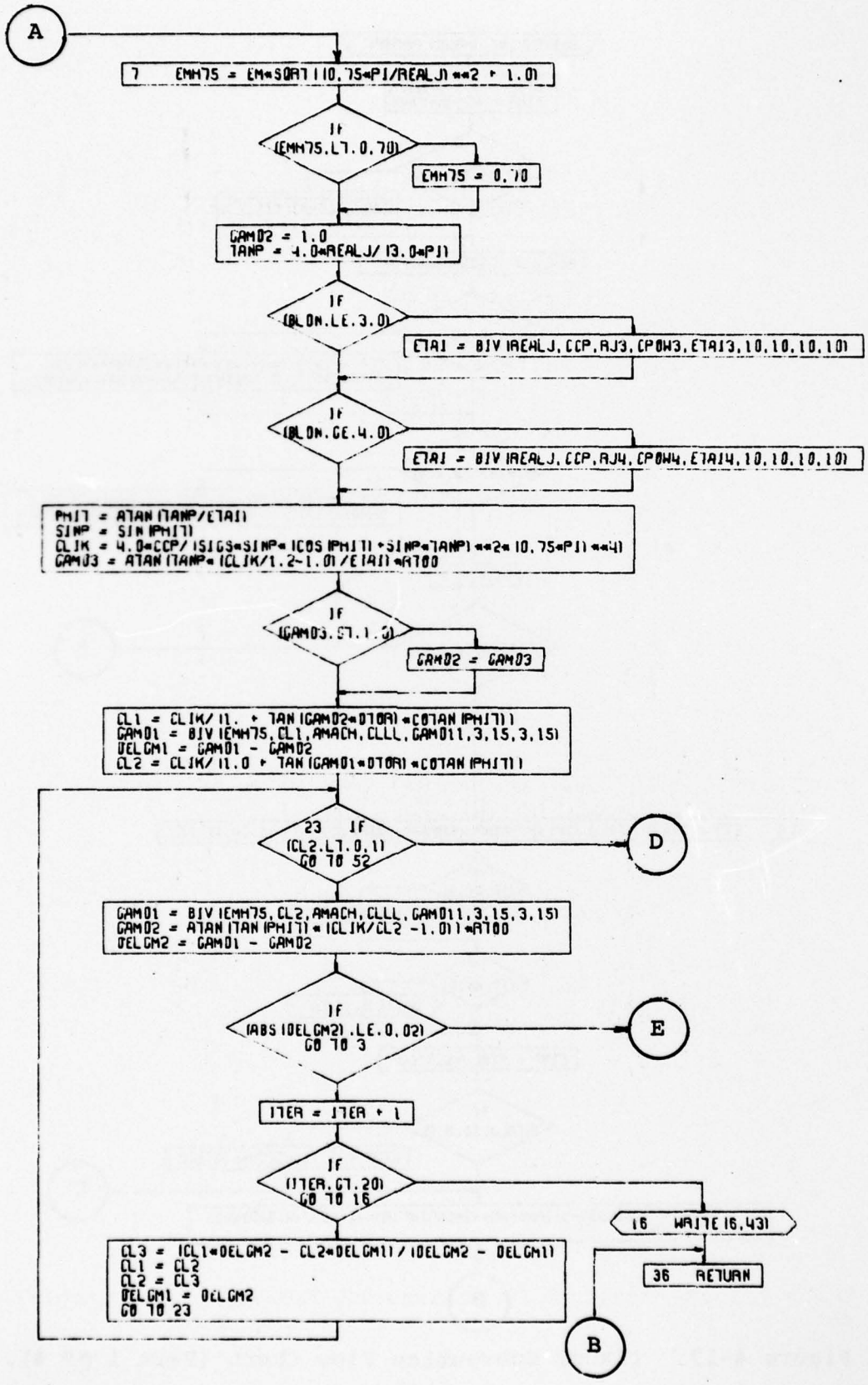

Figure 4-17. THRUST Subroutine Flow Chart (Part 2 of 4).

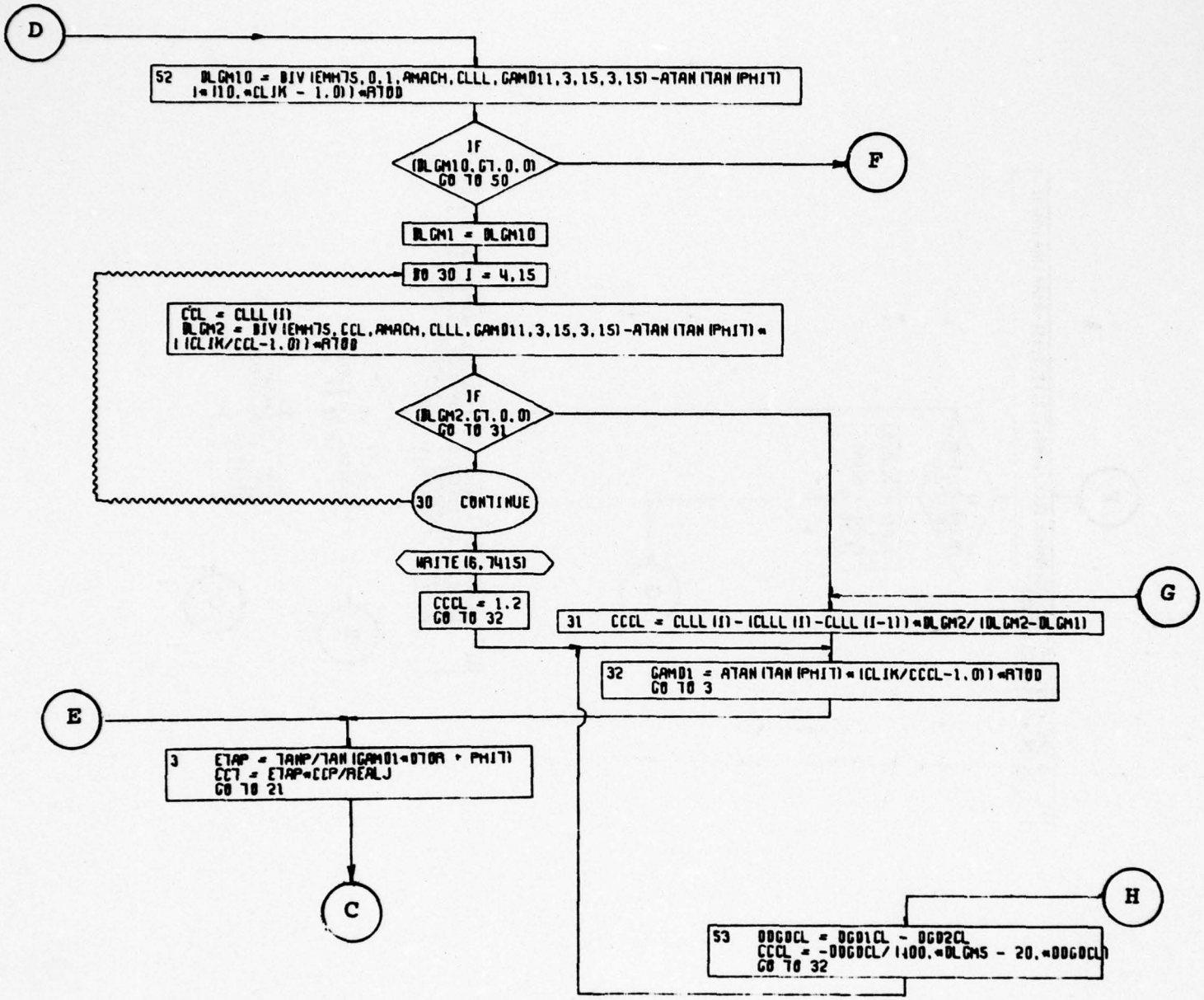

Figure 4-17. THRUST Subroutine Flow Chart (Part 3 of 4).

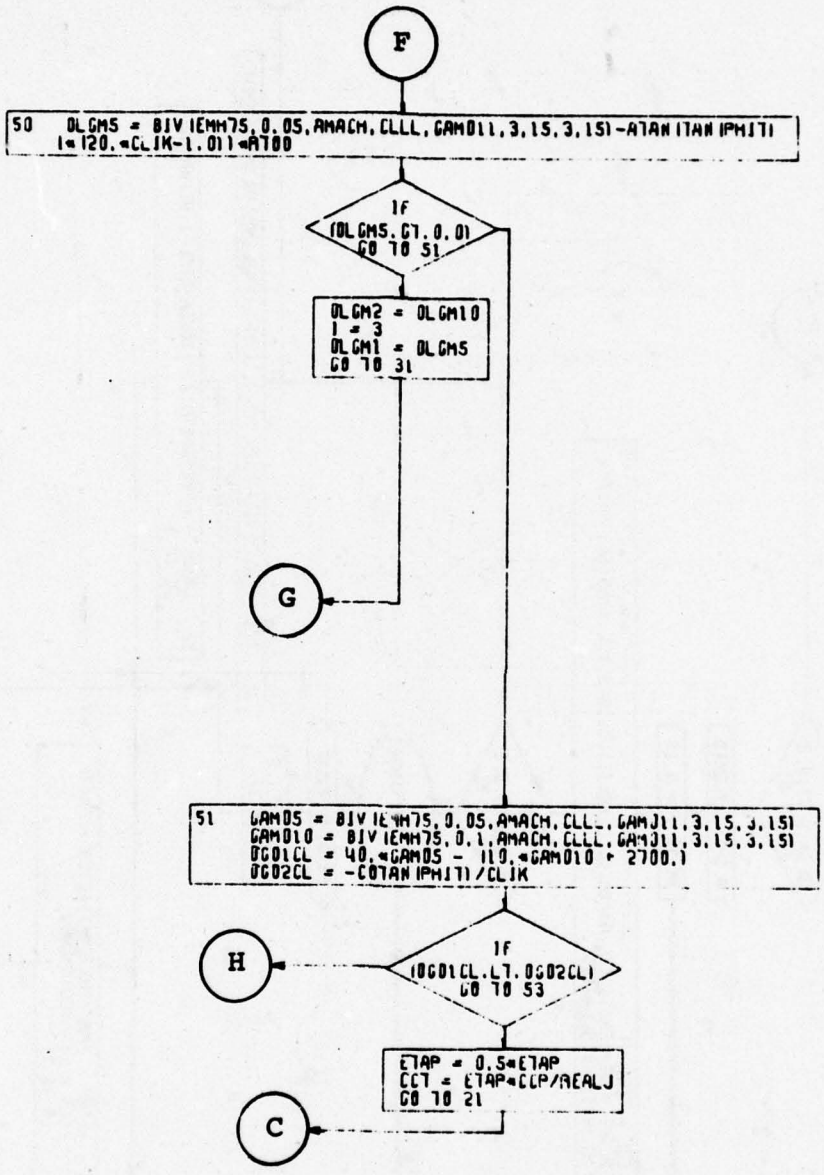

Figure 4-17. THRUST Subroutine Flow Chart (Part 4 of 4).

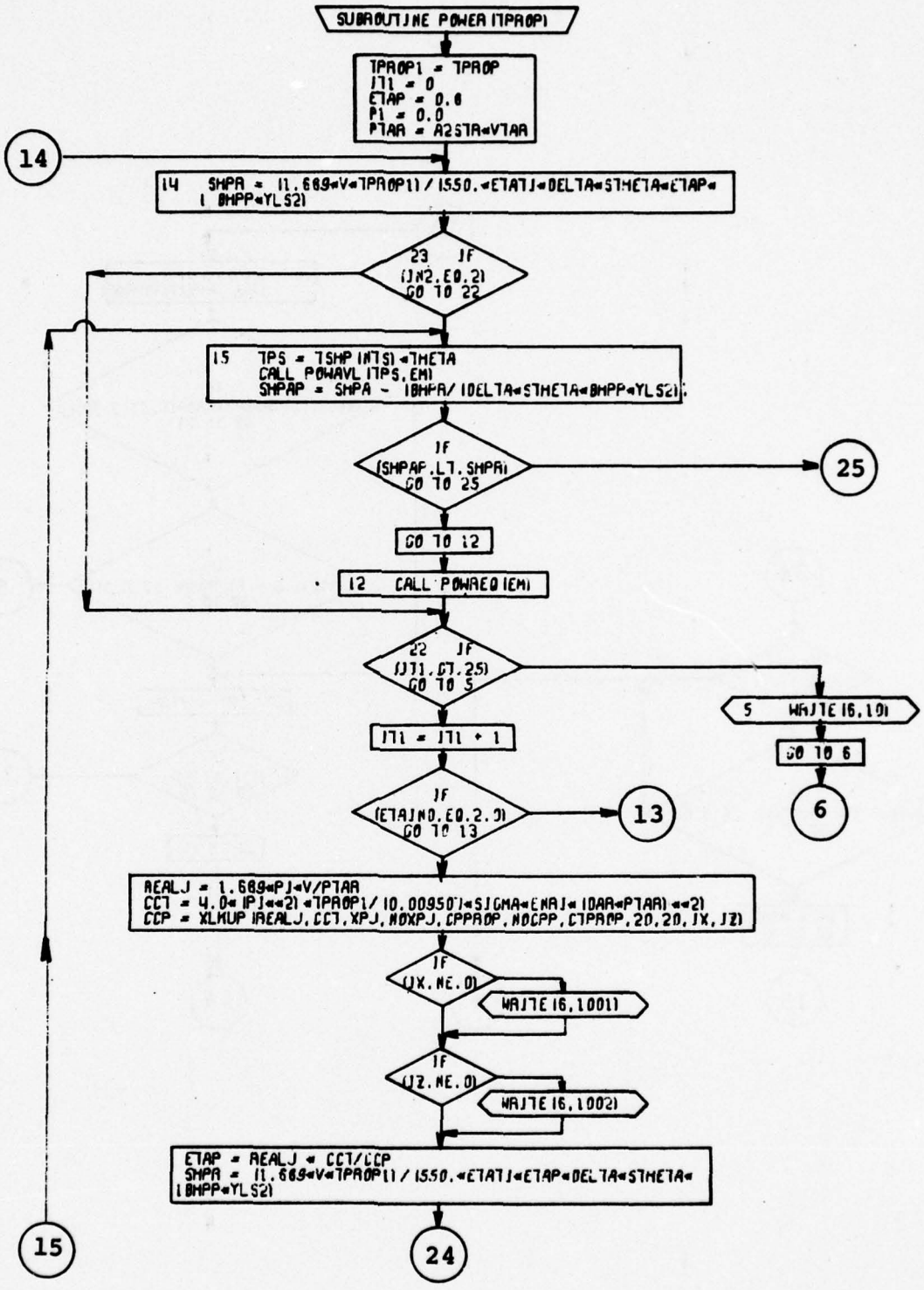

Figure 4-18. POWER Subroutine Flow Chart (Part 1 of 3).

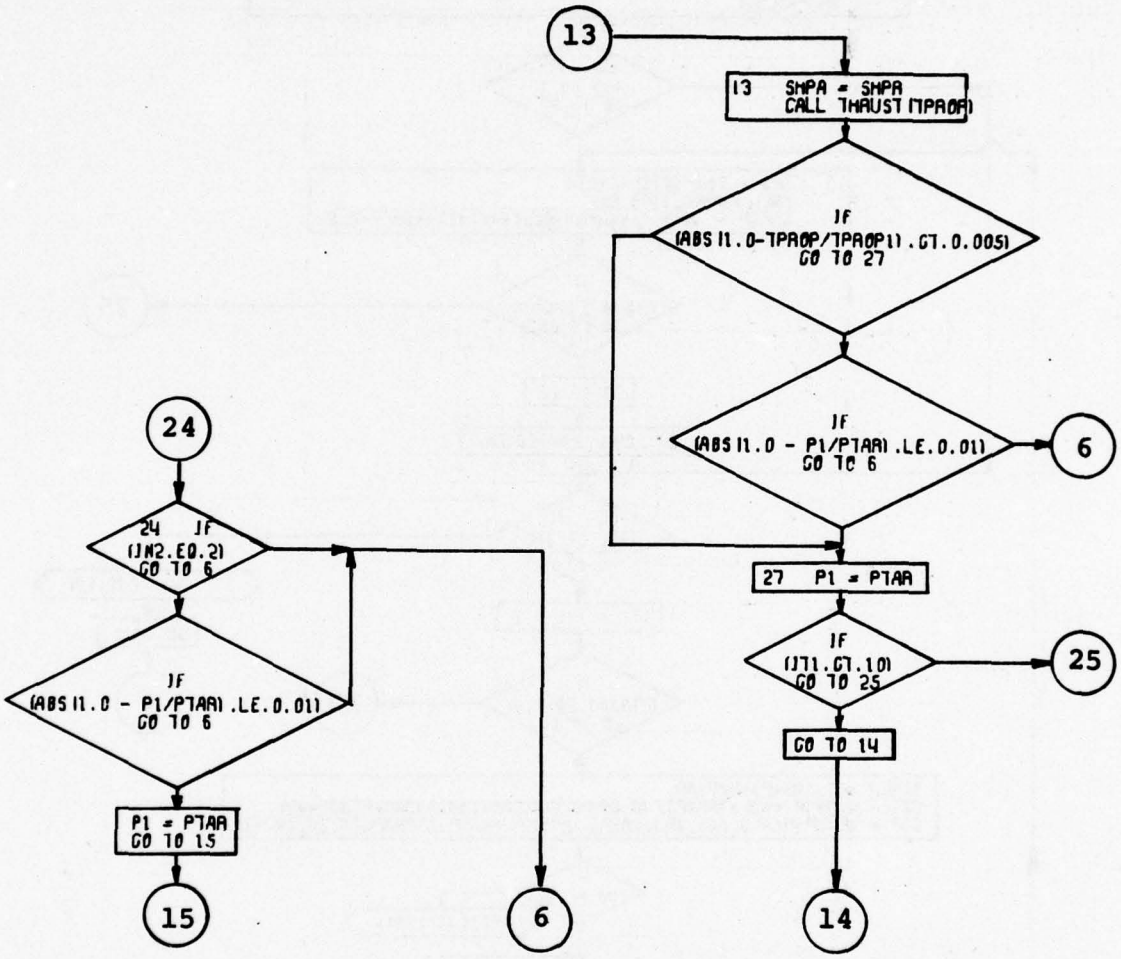

Figure 4-18. POWER Subroutine Flow Chart (Part 2 of 3).

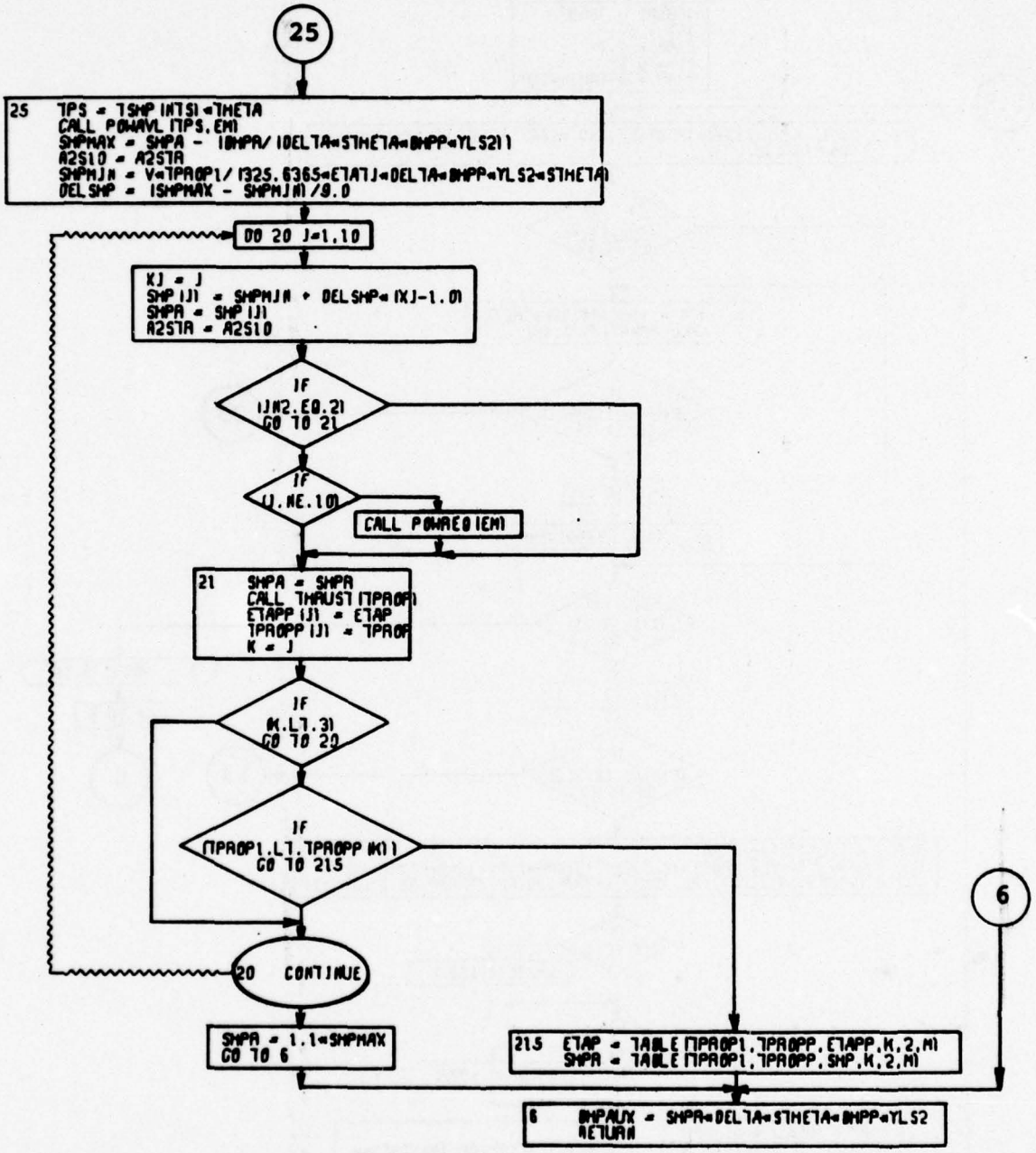

Figure 4-18. POWER Subroutine Flow Chart (Part 3 of 3).

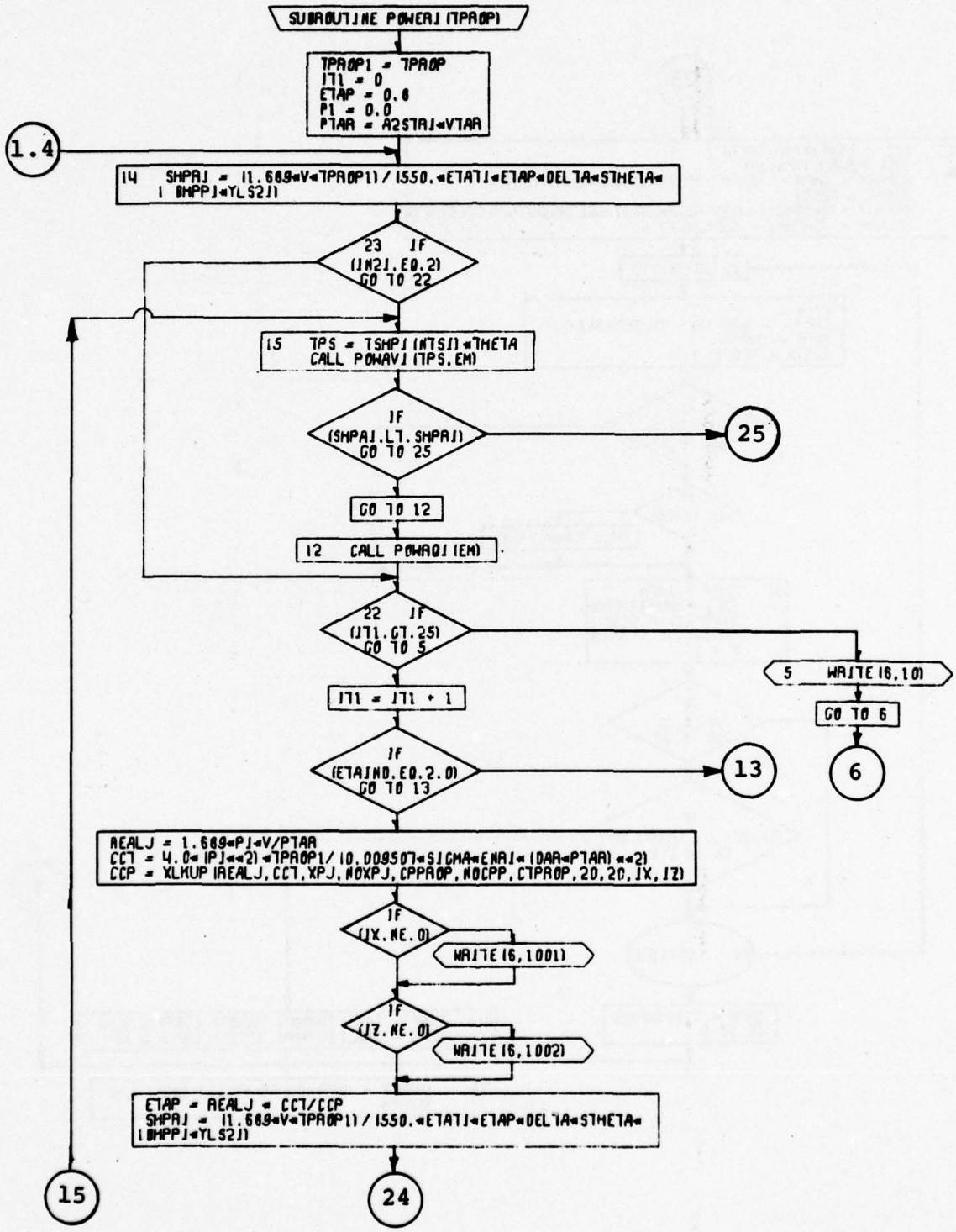

Figure 4-19. POWERI Subroutine Flow Chart (Part 1 of 3).

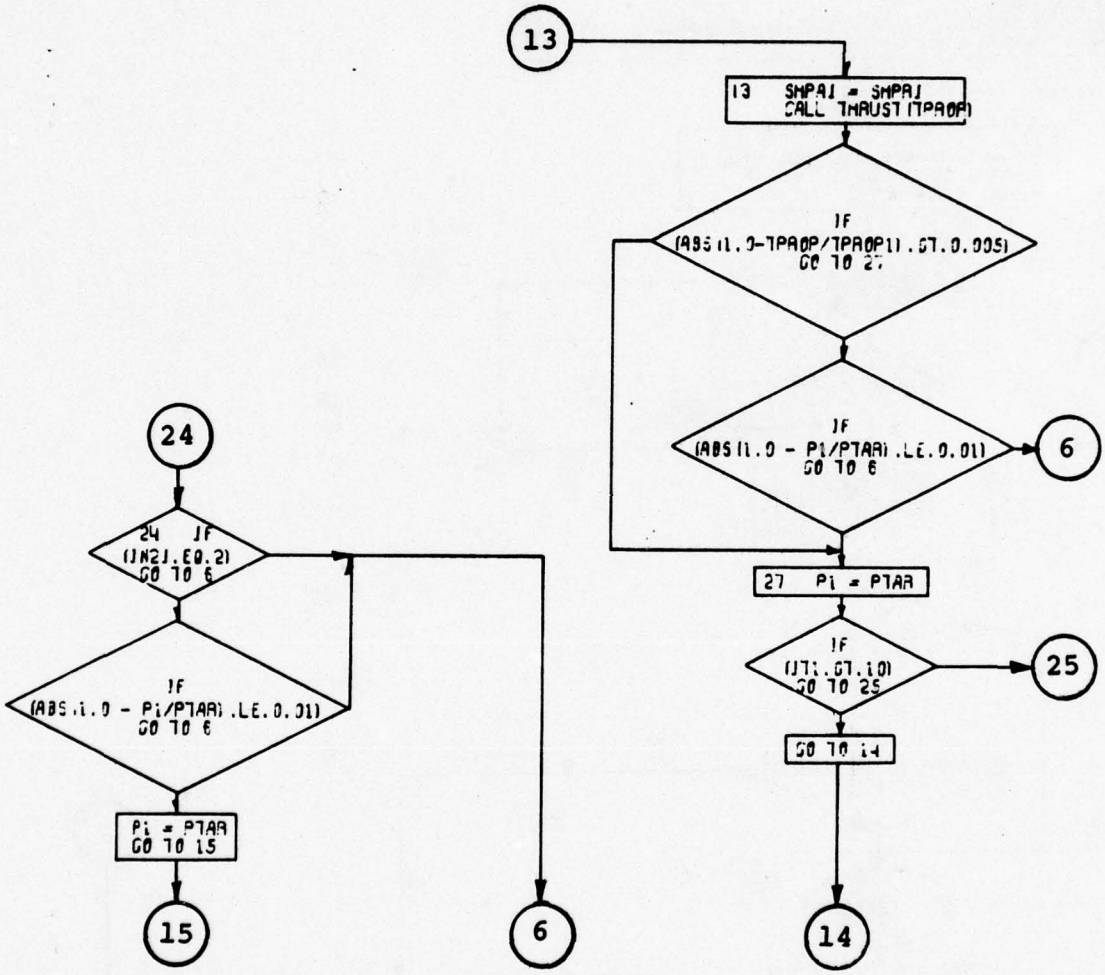

Figure 4-19. POWERI Subroutine Flow Chart (Part 2 of 3).

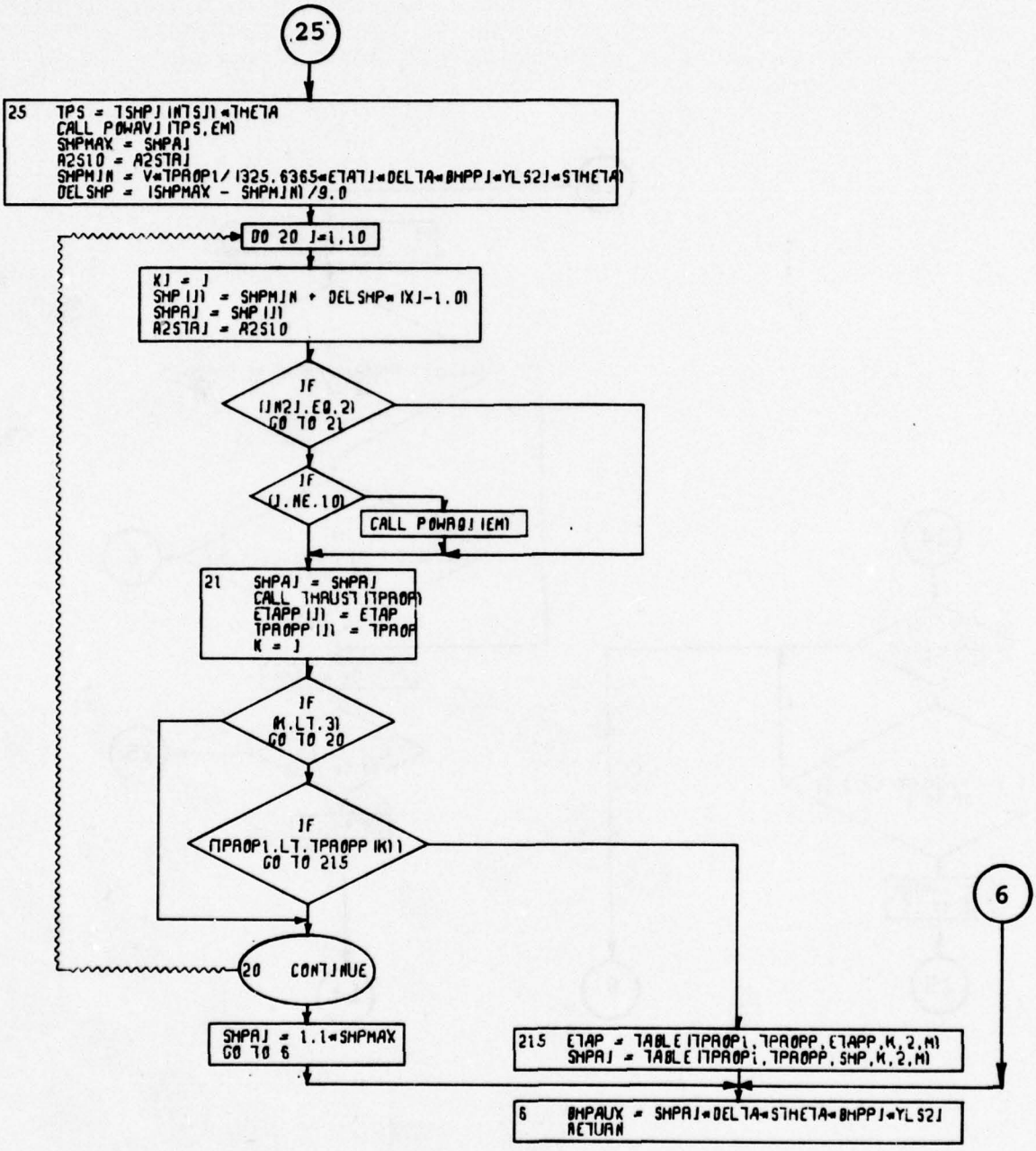

Figure 4-19. POWERI Subroutine Flow Chart (Part 3 of 3).

TABLE 4-3. COEFFICIENTS FOR PROPELLER EQUIVALENT POLARS

COEFFICIENTS FOR CRUISE:

C_L	M_H	a_0	a_1	a_2	M_H	a_0	a_1	a_2	M_H	a_0	a_1	a_2
0	0.7	90.	0.	0.	0.8	90.	0	0	0.9	90.	0.	0.
.05	↓	7.0392	1.9949	61.2416	↓	10.2148	2.4433	86.4731	↓	11.3227	40.9515	21.9481
.10		4.8350	-4.1639	19.2195		8.3106	-22.6338	56.0		11.3355	-14.062	62.0142
.15		3.2218	-1.7030	8.291		5.4623	-14.9997	35.3636		8.3676	-12.2425	36.0889
.20		2.7551	-2.5322	7.0366		4.0458	-9.9837	23.0606		6.5856	-9.574	25.9573
.3		2.481	-4.5422	7.3774		3.9439	-13.0524	22.0028		5.3862	-8.9808	18.6439
.4		2.4521	-5.4949	7.4251		3.6769	-11.7146	17.3803		5.2054	-9.3153	16.4063
.5		2.8149	-7.092	8.3401		3.8766	-12.0044	16.0882		6.1902	-14.7867	23.2672
.6		3.8725	-10.861	11.4678		4.5901	-13.8756	17.2451		8.153	-25.0375	39.117
.7		5.6653	-16.2691	15.8093		6.1044	-18.2607	21.8349		10.1745	-30.7342	51.0509
.8		8.5799	-24.8115	22.6773		8.9031	-26.0958	30.7056		13.0822	-33.2211	58.1494
.9		12.25	-33.6185	28.7271		12.2042	-29.4588	34.1515		16.5344	-34.9378	64.3529
1.0		17.0496	-43.061	33.8798		17.0398	-37.3809	43.697		20.8089	-40.6314	76.3927
1 1		21.8332	-47.8821	33.6322		22.784	-47.3791	55.5456		25.6453	-49.145	94.4326
1.2		31.7062	-49.6246	26.4923		28.7851	-57.8217	68.2121		33.5049	-77.6449	144.4176

4.8 SIZE TRENDS SUBROUTINE

The size trends subroutine calculates the trends of the aircraft geometric dimensions as the weight of the aircraft changes throughout the iterative sizing loop. Figure 4-22 displays a flow chart showing the options available within the size trends subroutine.

The first of these is the option which determines main rotor diameter and solidity. It is possible to input diameter and solidity directly, or combinations of disc loading, design C_T/σ, diameter, and solidity. The following choices, specified by the main rotor sizing indicator, RDMIND, are available:

RDMIND	INPUT
1	Diameter and solidity
2	Disc loading and solidity
3	Diameter and C_T/σ
4	Disc loading and C_T/σ

If main rotor solidity is calculated, the program will choose the solidity satisfying the most critical of the three groups of requirements specified by input locations 0182 - 0190. These solidity sizing requirements are:

(a) Solidity sized for hover conditions (Input $(C_T/\sigma)_H$, T/W)

(b) Solidity sized for maneuver conditions (Input cruise speed, atmospheric conditions, maneuver C_T/σ, and rotor g loading)

(c) Solidity sized for cruise conditions (Input cruise speed, atmospheric conditions, cruise C_T/σ, and rotor loading (N))

If so desired, the user may dictate which of these solidity choices the program makes simply by manipulating the inputs. For example:

If the solidity sizing choice desired is:	Then input:
Hover	Desired value for $(C_T/\sigma)_H$, $(C_T/\sigma)_{CR}$ = 1.0, g_{ROTOR} = .001, N(Rotor Loading) = 0.1

Maneuver	$(C_T/\sigma)_H$ = 1.0, Desired values for $(C_T/\sigma)_{CR}$ and g_{ROTOR}, N(Rotor Loading) = 0.1
Cruise	$(C_T/\sigma)_H$ = 1.0, Desired value of $(C_T/\sigma)_{CR}$, g_{ROTOR} = 0.001, Desired value of N(Rotor Loading)

As noted earlier, two basic types, the single and tandem rotor helicopter, can be sized using this program. The following (beginning with the single rotor helicopter) provides a brief description of the options available to the user.

Tail rotor diameter may be input directly, or calculated. The choices open to the user are:

TRDIND

1	Tail rotor diameter calculated using a trend
2	Tail rotor diameter input directly
3	Tail rotor diameter calculated based on an input tail rotor disc loading

The tail rotor diameter trend used when TRDIND = 1 is illustrated in Figure 4-20 (see also Reference 6). The tail rotor disc loading input when TRDIND = 3 does not include vertical fin sideload losses.

Tail rotor solidity may be input directly or calculated. If calculated (TRDIND = 2), the tail rotor solidity is determined by either hover-antitorque requirements or hovering-turn requirements (including tail rotor precession effects, see References 5 and 6). The former is obtained by setting $\dot{\psi}$ (yaw rate) and $\ddot{\psi}$ (yaw acceleration) equal to zero.

Yaw moment inertia (I_{ZZ}) is required in calculating the tail rotor solidity for the single rotor helicopter in a hovering turn. The following equation is included in the size trends subroutine to determine the aircraft yaw inertia.

$$I_{ZZ} = \frac{W}{32.2}\left(0.115 K_{ZZZ}\, e\right)^2$$

Where I_{ZZ} = Yaw moment of inertia, slug ft^2

W = Aircraft design gross weight, lb

K_{ZZZ} = Inertia adjusting factor (nominally = 1.0)

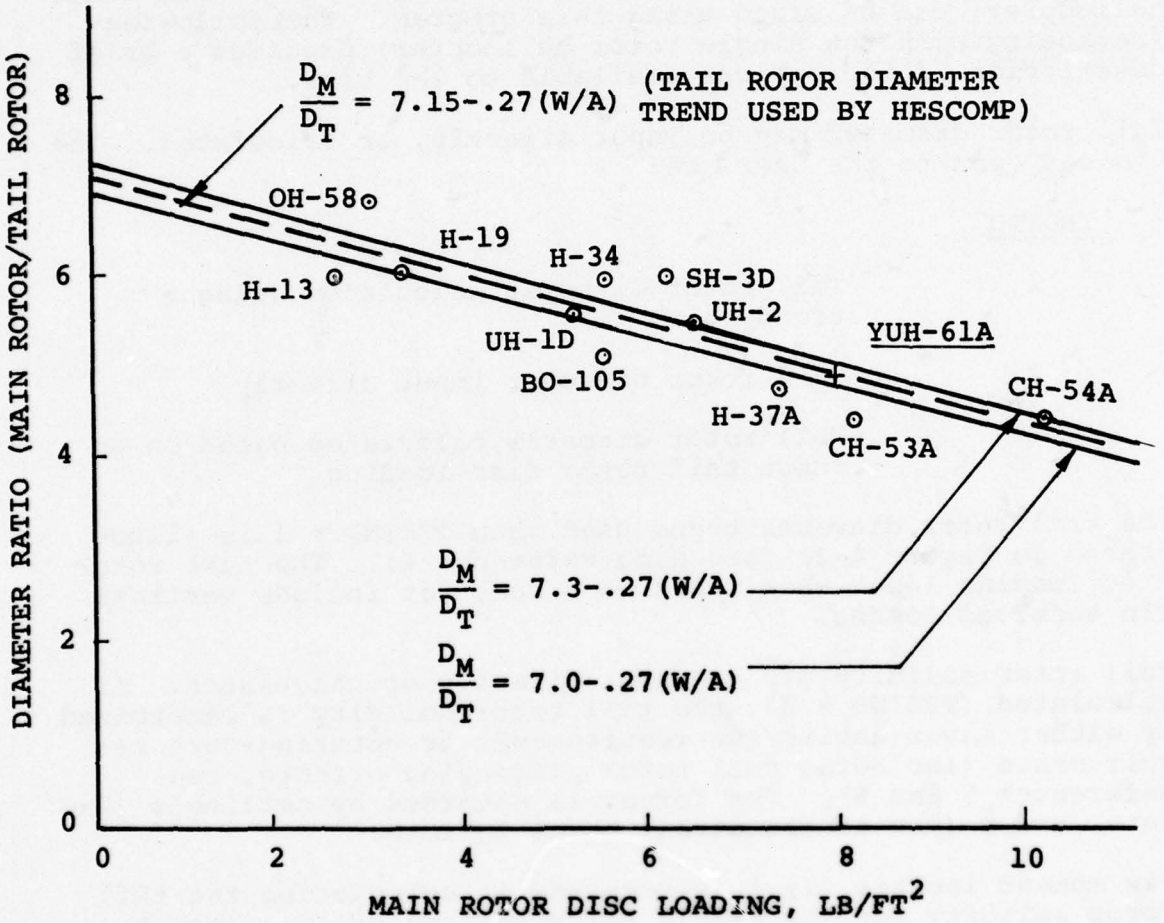

Figure 4-20. Tail Rotor Diameter Sizing Trend.

e = The combined sum of the study aircraft fuselage length and the cabin length measured from the nose of the aircraft to the end of the cabin.

0.115 = Trend constant for determining the single rotor helicopter yaw moments of inertia.

To modify the equation inertia value, enter a fractional input in the K_{ZZZ} block (LOC 0213) (entering 1.1 will increase the 0.115 constant by 10 percent, entering 0.9 will decrease it by 10 percent, etc.)

It should be noted that the tail rotor gross/net thrust ratio ($C_{T_G}/C_{T_{NET}}$) may either be input directly or calculated. In the latter instance, $C_{T_G}/C_{T_{NET}}$ is set equal to 1.00 and a value of the induced velocity ratio ($\bar{C}$) is input. Figure 4-21 illustrates typical values of $\bar{C}$ for both tractor and pusher tail rotor (see sketch below).

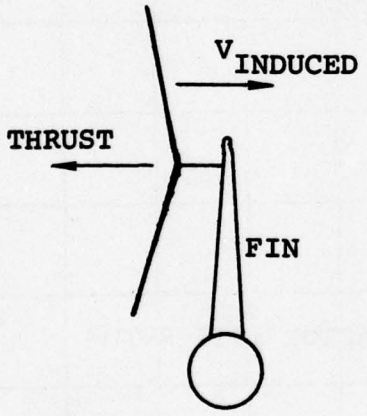

Tractor Tail Rotor

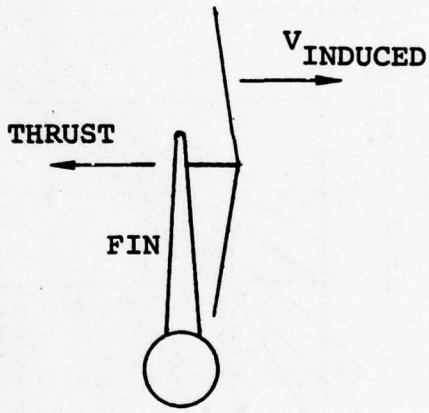

Pusher Tail Rotor

Note the difference in variations of $\bar{C}$ for the two different configurations. At low tail fin/rotor separation distances, the "tractor" values of $\bar{C}$ are sensitive to variations in tail rotor C_T. Thus, the closer the tractor tail rotor is located to the fin, the larger the error (admittedly small to begin with) involved in calculating C_{TG}/C_{TN}, since the user must "guess" what tail rotor C_T to use in selecting $\bar{C}$. The "pusher" $\bar{C}$ on the other hand is a function only of the fin/tail rotor separation distance.

In any event, use of this option is desirable in that tail rotor/fin sideload losses are matched to the vertical tail area calculated in the sizing process. Detailed explanations of all the factors involved in tail rotor design and sizing are contained in References 5 and 6.

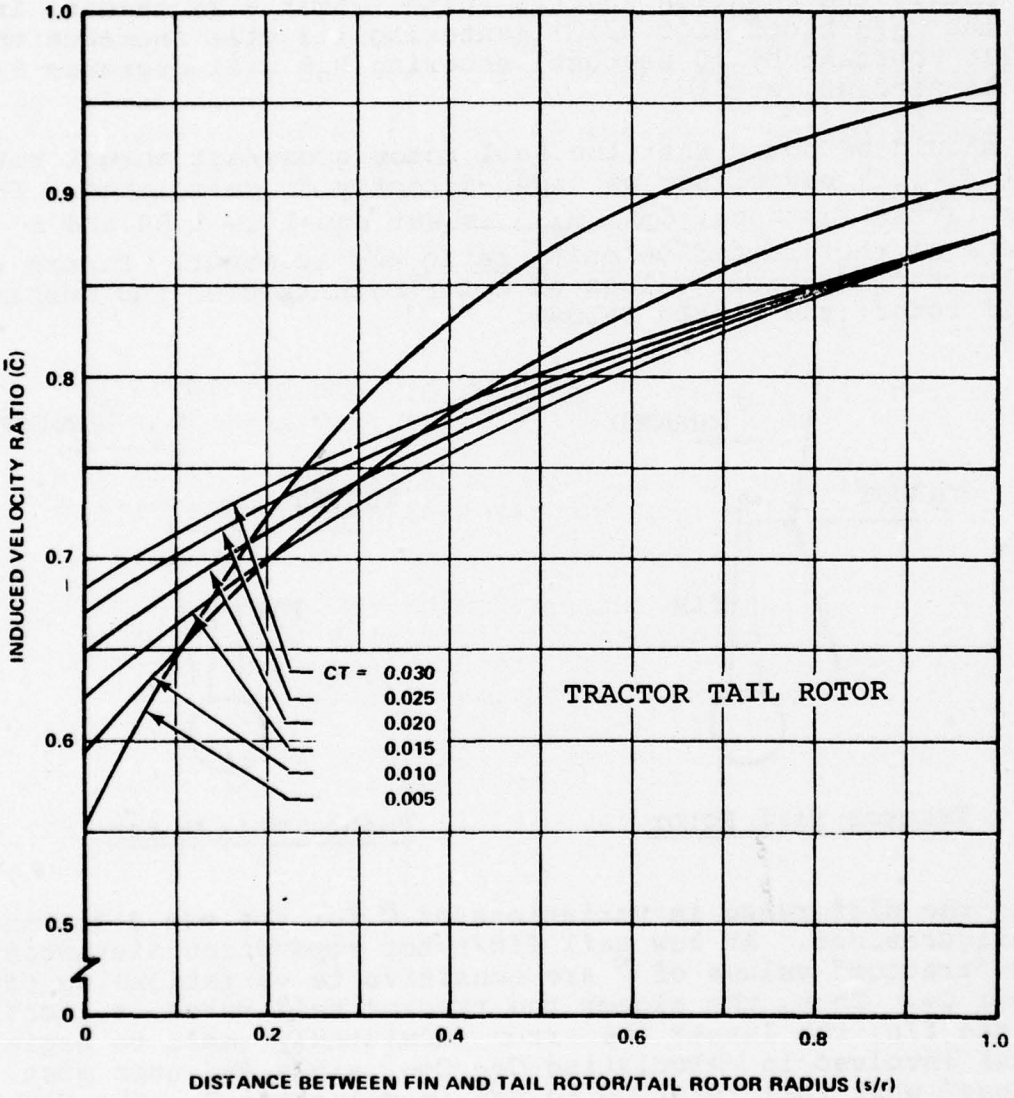

Figure 4-21. Tail Rotor/Vertical Tail Fin Interference Data (Part 1 of 2).

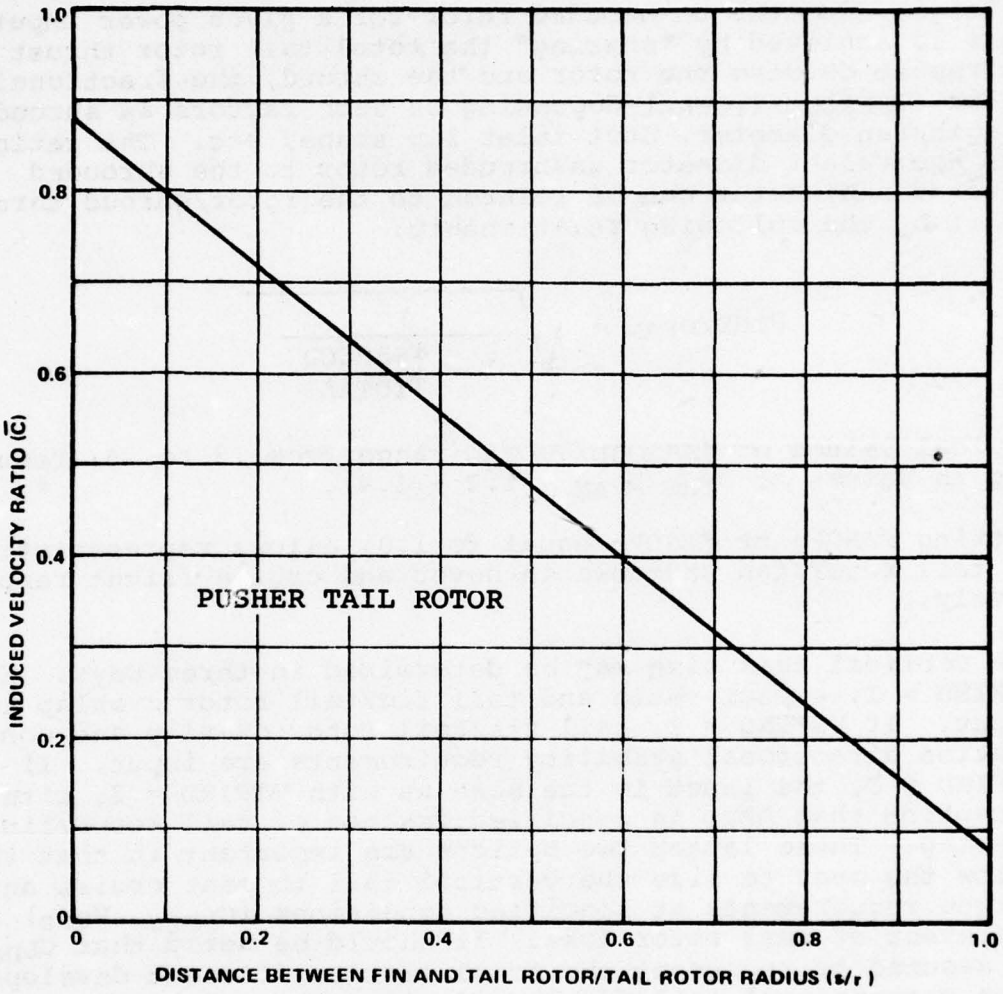

Figure 4-21. Tail Rotor/(Pusher Tail Rotor) Vertical Tail Fin Interference Data (Part 2 of 2).

Representation of a single rotor helicopter utilizing a "Fenestron" or shrouded tail rotor/fan is provided by the use of inputs D_{TRE}/D_{FAN} (LOC 0282), $FANOP_H$ (LOC 0283), and $FANOP_C$ (LOC 0284).

Such shrouded tail rotor/fans can provide the same thrust as a larger diameter unshrouded rotor for a given power input. This is achieved by "sharing" the total tail rotor thrust requirement between the rotor and the shroud, the fractional split (T_{SHROUD}/T_{TOTAL}) depending on such factors as shroud length/fan diameter, duct inlet lip shape, etc. The ratio of the equivalent diameter unshrouded rotor to the shrouded rotor/fan diameter can be related to the rotor/shroud thrust split by the following relationship:

$$D_{TRE}/D_{FAN} = \sqrt{\frac{1}{1 - \frac{T_{SHROUD}}{T_{TOTAL}}}}$$

Typical values of T_{SHROUD}/T_{TOTAL} range from .3 to .5 (resulting in values of $D_{TRE}/D_{FAN} = 1.2 \rightarrow 1.4$).

Setting $FANOP_H$ or $FANOP_C$ equal to 1.0, allows representation of tail rotor/fan shutdown in hover and cruise flight respectively.

The vertical tail size may be determined in three ways. If VTFIND = 1, aspect ratio and tail fin/tail rotor overlap is input. If VTFIND = 2, tail fin/tail rotor overlap and configuration directional stability requirements are input. If VTFIND = 3, the input is the same as with VTFIND = 2, with the exception that AR_{VT} is specified instead of tail rotor/fin overlap. These latter two options are important in that they allow the user to size the vertical tail to meet cruise antitorque requirements at specified conditions ($C_{L_{Des}}$, V_{Des}) in the event of tail rotor loss. It should be noted that $C_{L_{Des}}$ is assumed to represent the total lift coefficient developed by a conventional tail fin in sideslip, or a tail fin with a variable camber device (i.e., a rudder or flap) deployable under these circumstances.

The horizontal tail size is an input and must be specified as planform area S_{HT} (option HTIND = 1) or tail volume $\bar{V}_H$ (option HTIND = 2) defined as follows:

$$\bar{V}_H = \frac{16 \ell_{TH} S_{HT}}{\pi^2 D_{MR}^3}$$

where: ℓ_{TH} = distance from the main rotor hub to the aerodynamic center of the horizontal tail - ft

D_{MR} = main rotor diameter - ft

The horizontal tail is designed to achieve angle of attack as well as speed stability of the helicopter. The planform area required to achieve an acceptable longitudinal stability level is a function of the design gross weight, type of rotor system, tail rotor cant angle and tail moment arm as illustrated by the sizing trends for current helicopters presented in Figure 4-22. These trends represent a design criteria of approximately neutral static longitudinal stability at $\mu \geq .2$. As illustrated in this figure, aircraft with hingeless or articulated rotor systems require larger tail areas than aircraft with teetering rotors due to the larger destabilizing hub moment associated with locating the flapping hinge outboard of the center or rotation. The largest tail size is required for configurations employing canted tail rotors because of their large aft c.g. range.

For preliminary design studies, the sizing trends shown in Figure 4-22 can be used to define the inputs S_{HT} or V_H; however, an estimate of design gross weight and moment arm is required. As noted in Table 4-4, the ratio ℓ_{TH}/R_{MR} for current helicopters is on the order of 1.0 to 1.2. The main rotor radius (R_{MR}) can be defined from gross weight and disk loading estimates. For detailed design studies, further analyses of aircraft longitudinal stability is required prior to finalizing the tail design. This is particularly true for winged and compound helicopters where wing and auxiliary propulsion effects must be considered.

Forward rotor pylon dimensions are specified directly (input LOCS 0152 - 0156).

The computer program calculates the length and wetted area of the fuselage based upon input values of cabin length, cabin mean diameter, fineness ratios of the pilots section and tail section, and calculated tail boom dimensions. The tail boom length is established by the tail rotor diameter, the need to maintain a reasonable gap between the main and tail rotor discs and the relative position of the main rotor on the fuselage. This position (X_M/ℓ_B) may either be input (MRPIND = 0) or calculated (MRPIND = 1, 2), using a simple weight-balance subroutine. If the latter option is chosen, the relative positions (from the aircraft nose) of the various aircraft components (engines, primary drive system, etc.), must be input (LOCS 2678-2696). Additional increments of fuselage wetted area (to account for miscellaneous bulges, fairings, etc.) may be input through the use of $\Delta S_{Wet}/S_F$ (LOC 0120) and ΔS_{Wet} (LOC 0121).

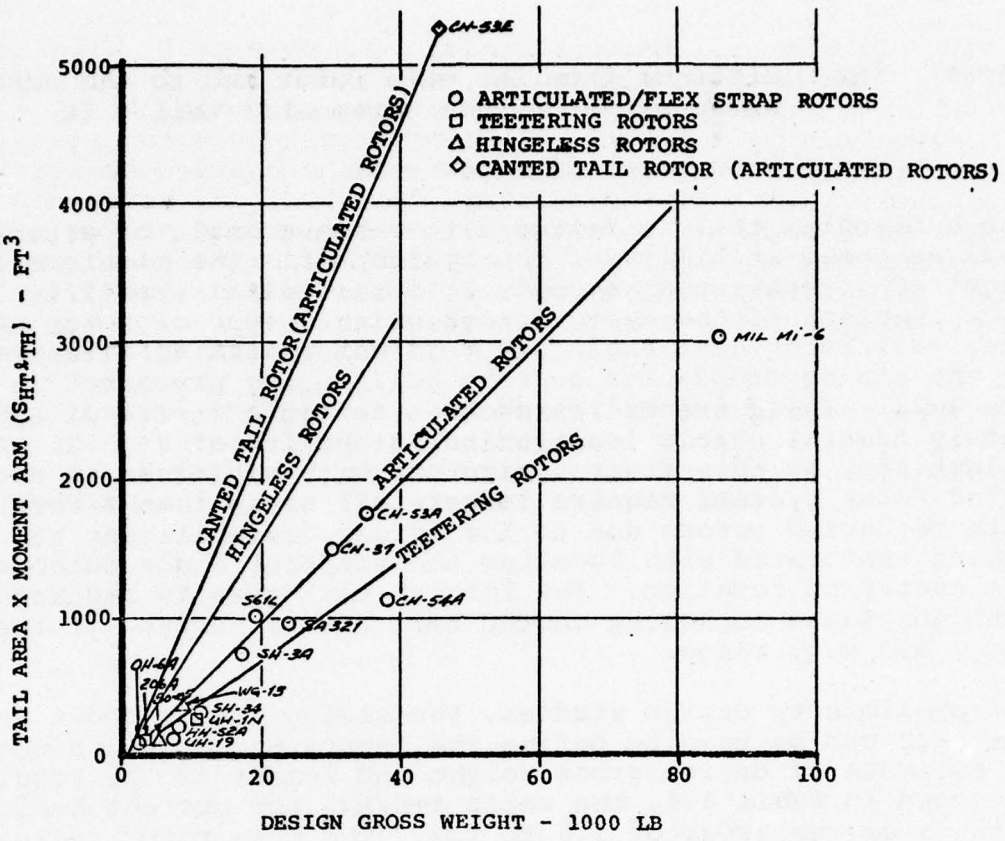

Figure 4-22. Horizontal Tail Sizing.

TABLE 4-4. PRODUCTION HELICOPTER HORIZONTAL TAIL PARAMETERS.

TYPE OF ROTOR	AIRCRAFT	DESIGN GROSS WEIGHT-LB	MAIN ROTOR DIAMETER-FT	TAIL AREA - FT^2	ℓ_{TH}/R_{MR}
ARTICULATED & FLEXSTRAP	OH-6A	2200	26.3	6.7	1.09
	UH-19	7200	53	4.5	1.09
	HH-52A	7900	53	7.2	1.17
	SH-34	11000	56	10.7	1.01
	SH-3A	17000	62	20	1.21
	S-61L	19000	62	27	1.21
	SA321	24000	62	25.5	1.23
	CH-37	30000	72	34.2	1.22
	CH-53A	35000	72	40	1.22
	CH-54A	38000	72	26	1.22
	MIL Mi-6	86000	114.8	53	1.0
HINGELESS	BO-105	5070	32.2	8.6	.93
	WG-13	8500	42	12	1.23
ARTICULATED WITH CANTED TAIL ROTOR	CH-53E	46000	79	121	1.10
TEETERING	206A	3000	33.3	9.4	.75
	UH-1N	10500	48	23.5	.70

A single rotor helicopter without a tail rotor (e.g., a coaxial rotor, or a single rotor configuration employing main rotor torque cancellation by means other than a tail rotor or fan) may be sized by setting TRDIND = 0. In this case, fuselage dimensions are input as before, with the exception of the tail boom. Tail boom length is determined by the relative position of the main rotor on the fuselage and the horizontal distance between the tip of the tail boom and the main rotor disc. This distance is input in the location (LOC 0214) used for specifying the main/tail rotor disc gap for conventional single rotor helicopters. Note that this dimension can be either positive or negative, the latter defining a configuration where the empennage carried by the tail boom lies under the main rotor disc. In addition, VTFIND (LOC 0017) must be input as 1, vertical tail area being calculated from input values of AR_{VT} (LOC 0135) and vertical tail span (when TRDIND = 0, vertical tail span (in feet) is input in LOC 0139 (K_Z)).

Three options are available for sizing a tandem rotor helicopter fuselage. These options, specified by the indicator FDMIND, are:

FDMIND	Input	Calculated
1	((O/L)/D), forward, aft rotor positions	fuselage length (ℓ_F) cabin length (ℓ_C)
2	((O/L)/D), cabin length (ℓ_C)	fuselage length (ℓ_F) forward & aft rotor positions
3	cabin length (ℓ_C), forward and aft rotor positions	((O/L)/D), fuselage length (ℓ_F)

In cases (FDMIND = 1) where the calculated cabin length is less than zero, an error statement is printed and the case terminated. Likewise, if the rotor overlap/diameter ratio exceeds either +0.5 or -0.5, the case is terminated.

The aft rotor pylon dimensions may either be input directly (APHIND = 1) or calculated (APHIND = 2) based on an input of rotor gap/stagger ratio. The forward pylon dimensions are input directly as in the case of the single rotor helicopter.

In the case of a compound helicopter, propeller dimensions and characteristics (i.e., AF, blade number, C_{L_i}, etc.) are input directly.

Wing sizing options are divided into two groups, those for determining wing area (S_WIND) and those for determining wing

span (b_{WIND}). Wing area may either be input directly (S_{WIND} = 1), calculated based on an input wing loading (S_{WIND} = 2), or sized to meet a maneuver requirement. In the latter case, the wing size is dictated by the need to carry the difference between the overall g requirement (LOC 0188) and the maneuver g's (LOC 0189) carried by the main rotor(s). Wing span may be determined on the basis of an input wing span/rotor diameter ratio (b_{WIND} = 1), an input aspect ratio (b_{WIND} = 2); or, in the case of a compound helicopter with wing mounted propellers, on the basis of propeller tip/fuselage clearance considerations (b_{WIND} = 3).

The dimensions of the primary and auxiliary independent engine nacelles are determined by the horsepower or thrust level of the engines. Separate input constants z_1, z_2, z_3, z_4, z_5 and z_6 are used to calculate the size of the nacelles.

Primary engine nacelles

$$\text{Diameter (ft)} = z_1 \left[\frac{SHP^*}{N_P}\right]^{1/2}$$

$$\text{length (ft)} = z_2 + z_3 \left[\frac{SHP^*}{N_P}\right]^{1/2}$$

$$\text{wetted area (ft}^2\text{)} = N_P \, \pi \, (\text{dia}) \, (\text{length})$$

Auxiliary independent engine nacelles

$$\text{diameter (ft)} = z_4 \left[\frac{SHP^*_i}{N_{P_i}}\right]^{1/2} \quad \text{or} \quad z_4 \left[\frac{F_N^*}{N_{P_i}}\right]^{1/2}$$

$$\text{length (ft)} = z_5 + z_6 \left[\frac{SHP^*_i}{N_{P_i}}\right]^{1/2} \quad \text{or} \quad z_5 + z_6 \left[\frac{F_N^*}{N_{P_i}}\right]^{1/2}$$

$$\text{wetted area (ft}^2\text{)} = N_{P_i} \, \pi \, (\text{dia}) \, (\text{length})$$

Figure 4-23 show a flow chart of this subroutine.

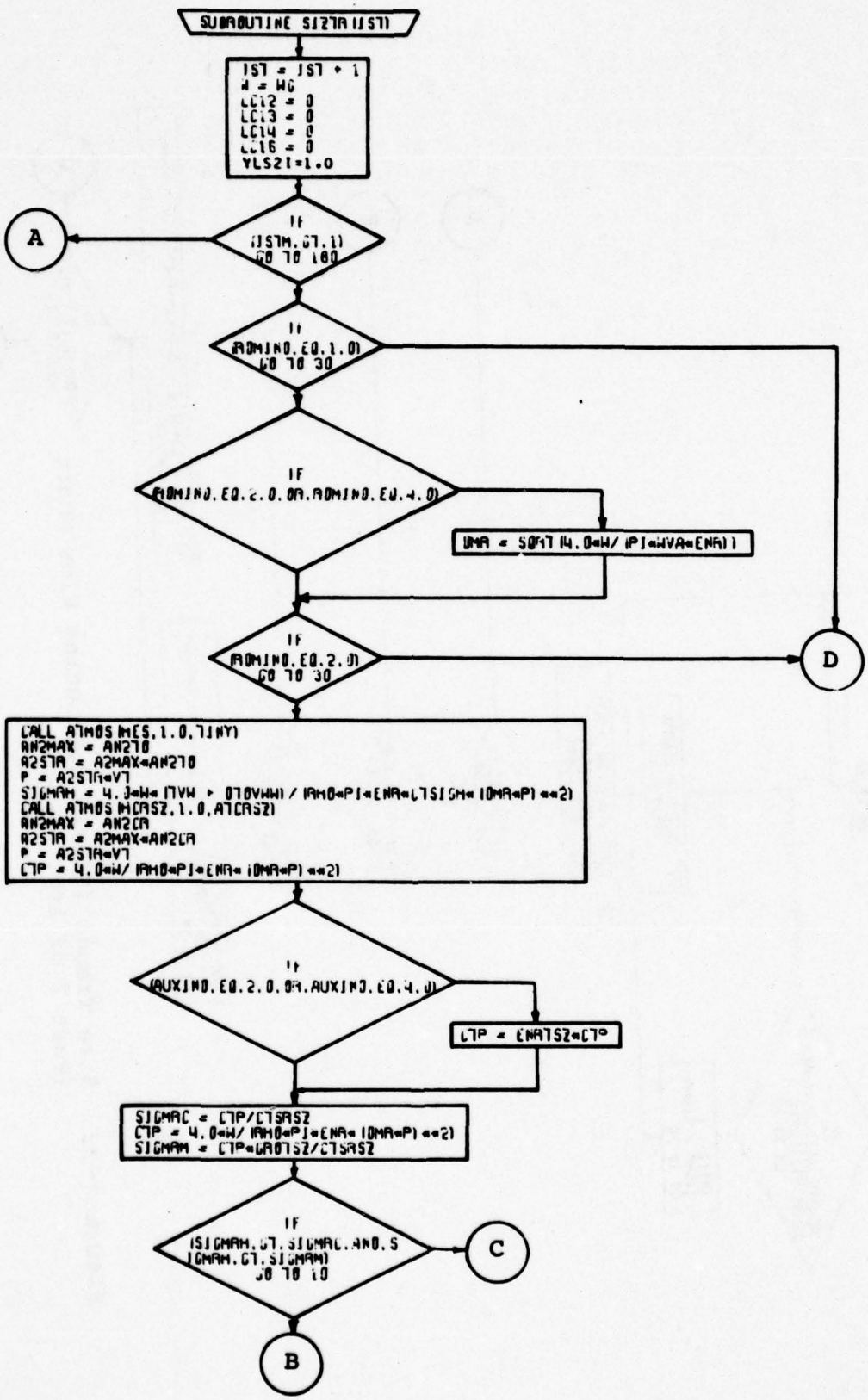

Figure 4-23. Size Trends (SIZTR) Subroutine Flow Chart (Part 1 of 14).

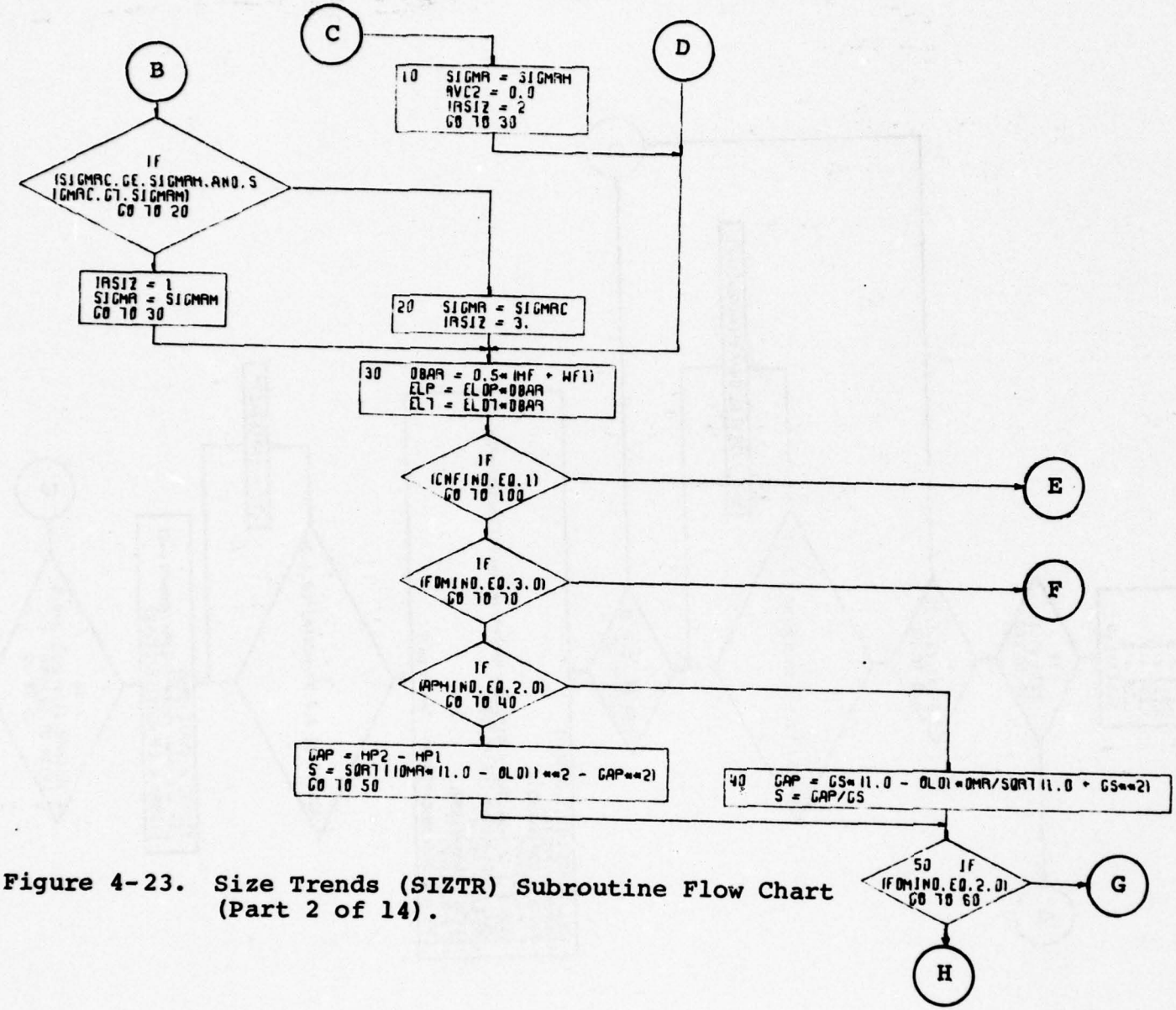

Figure 4-23. Size Trends (SIZTR) Subroutine Flow Chart (Part 2 of 14).

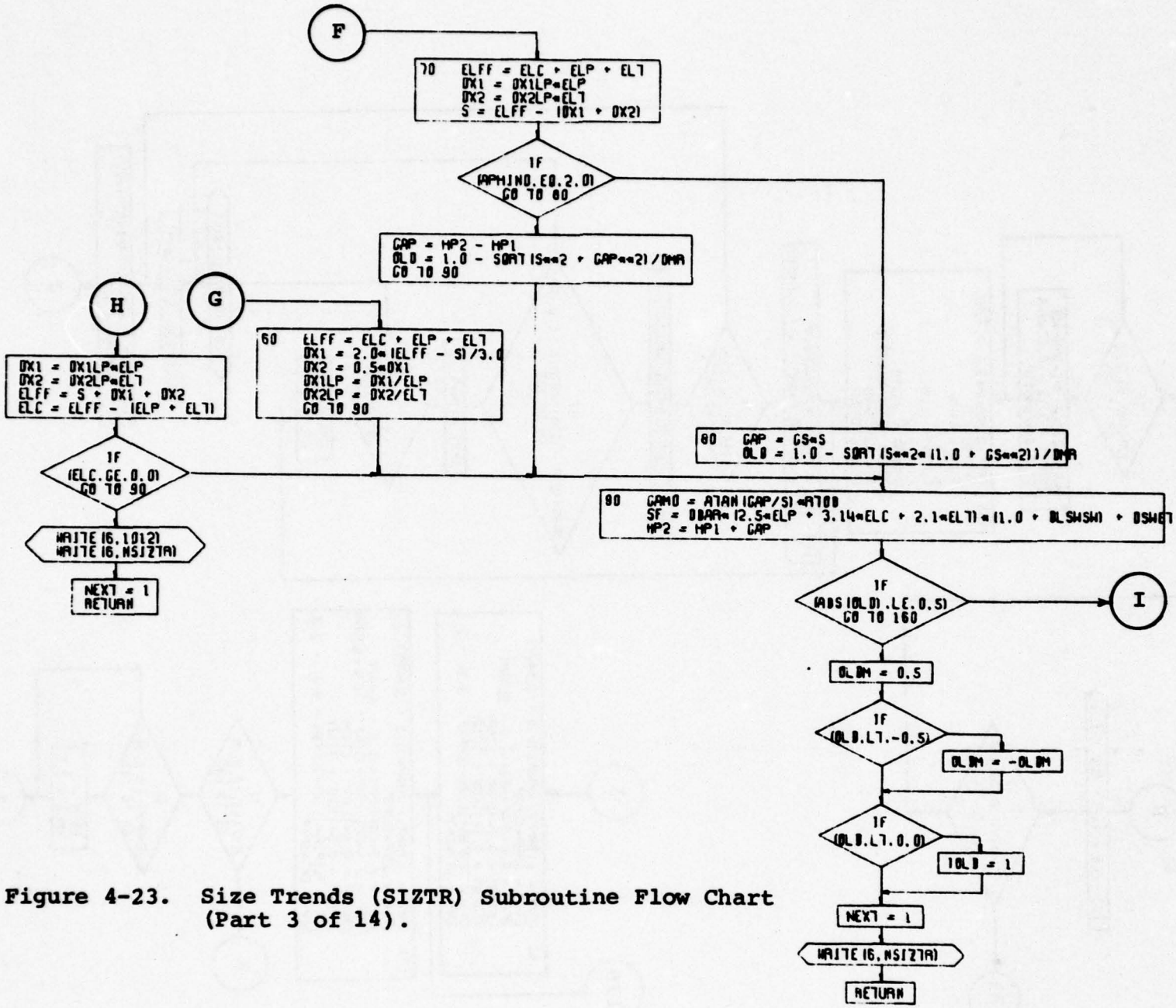

Figure 4-23. Size Trends (SIZTR) Subroutine Flow Chart (Part 3 of 14).

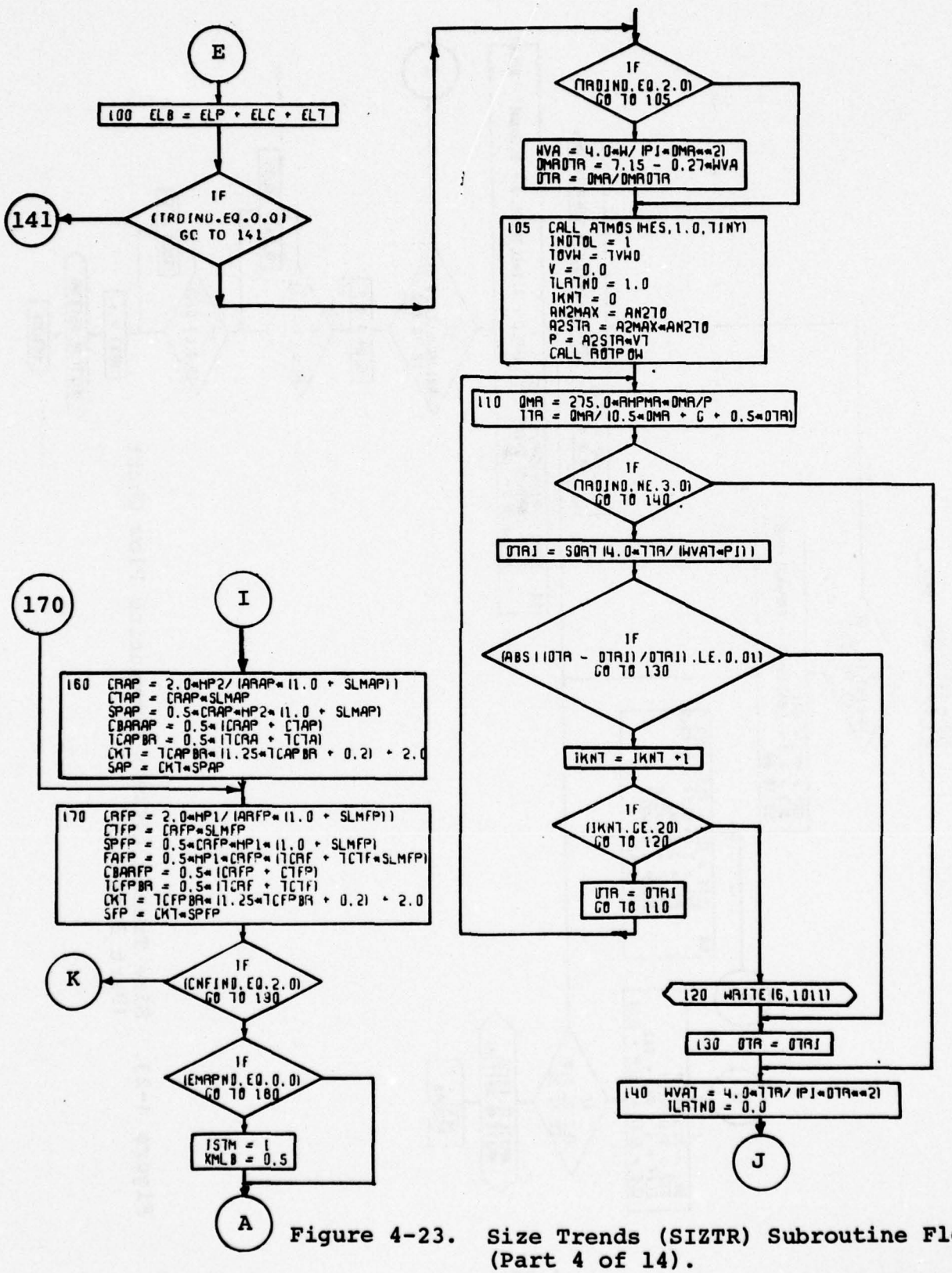

Figure 4-23. Size Trends (SIZTR) Subroutine Flow Chart (Part 4 of 14).

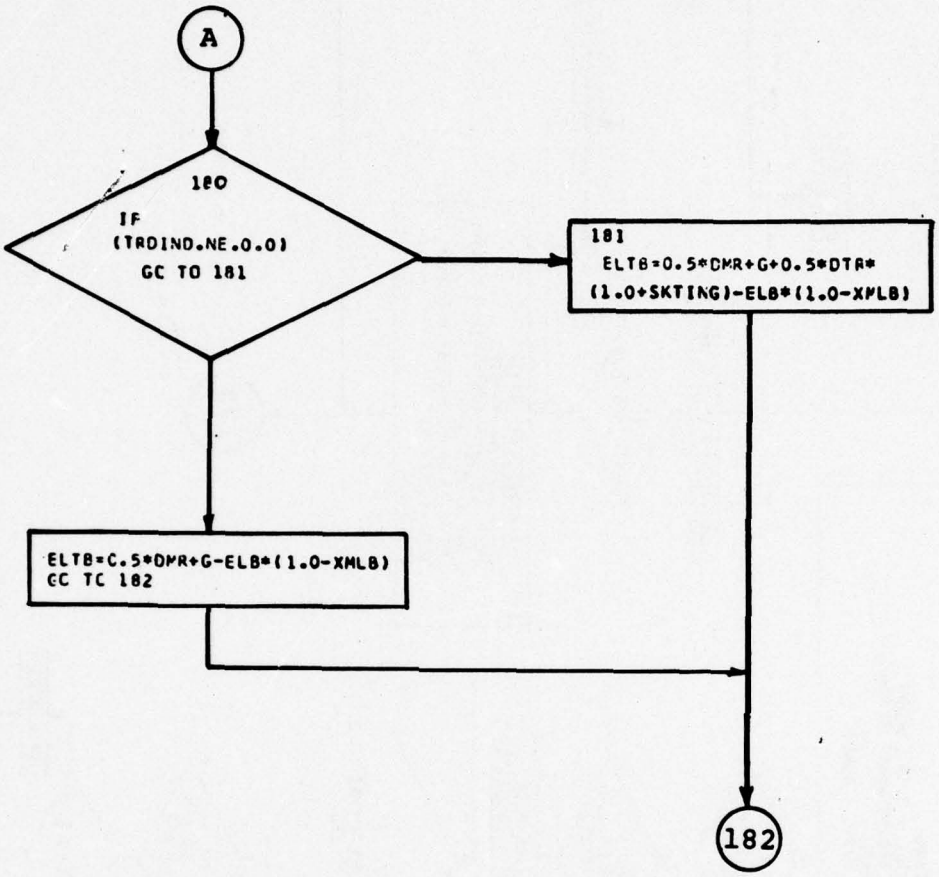

Figure 4-23. Size Trends (SIZTR) Subroutine Flow Chart (Part 5 of 14)

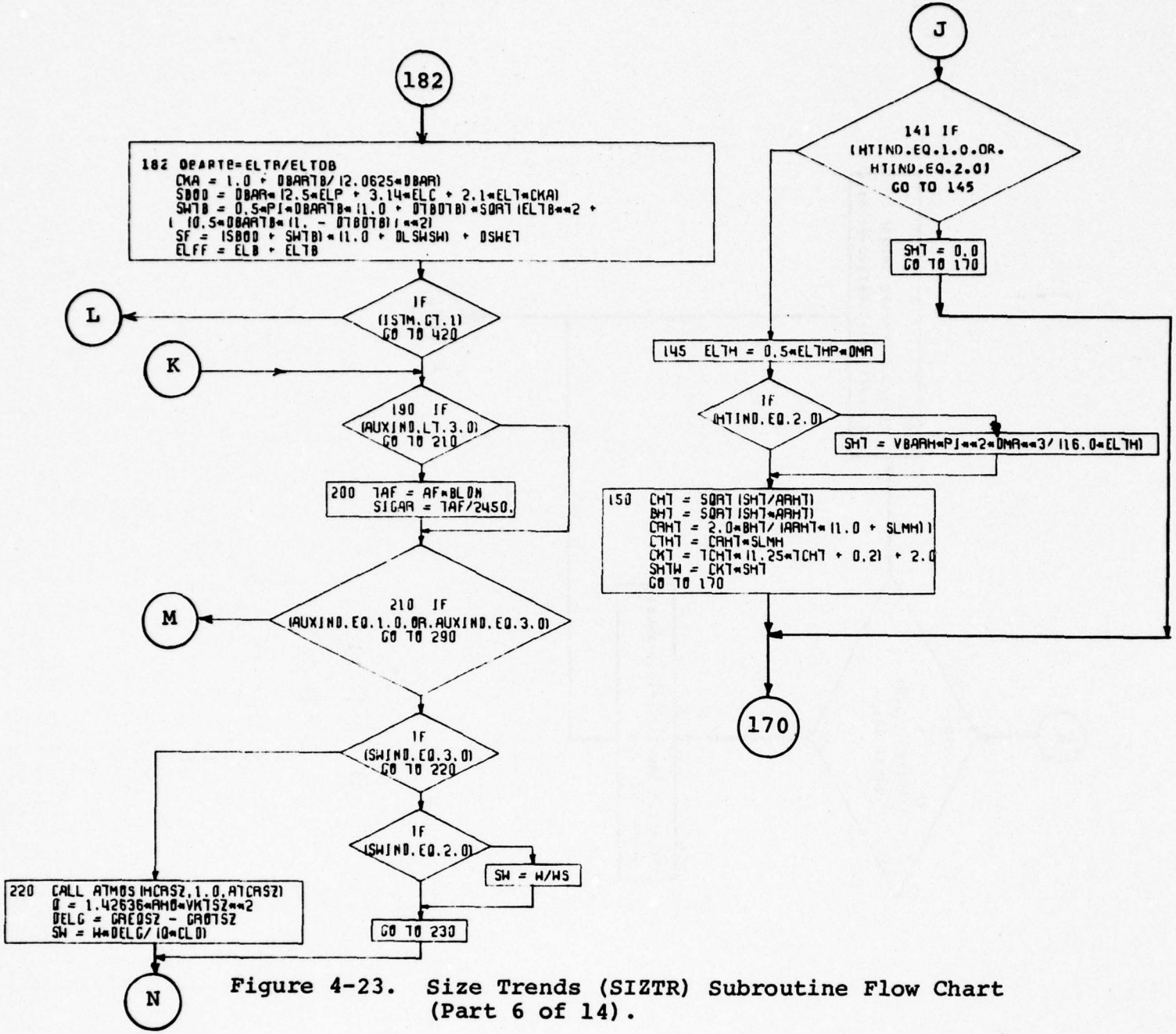

Figure 4-23. Size Trends (SIZTR) Subroutine Flow Chart (Part 6 of 14).

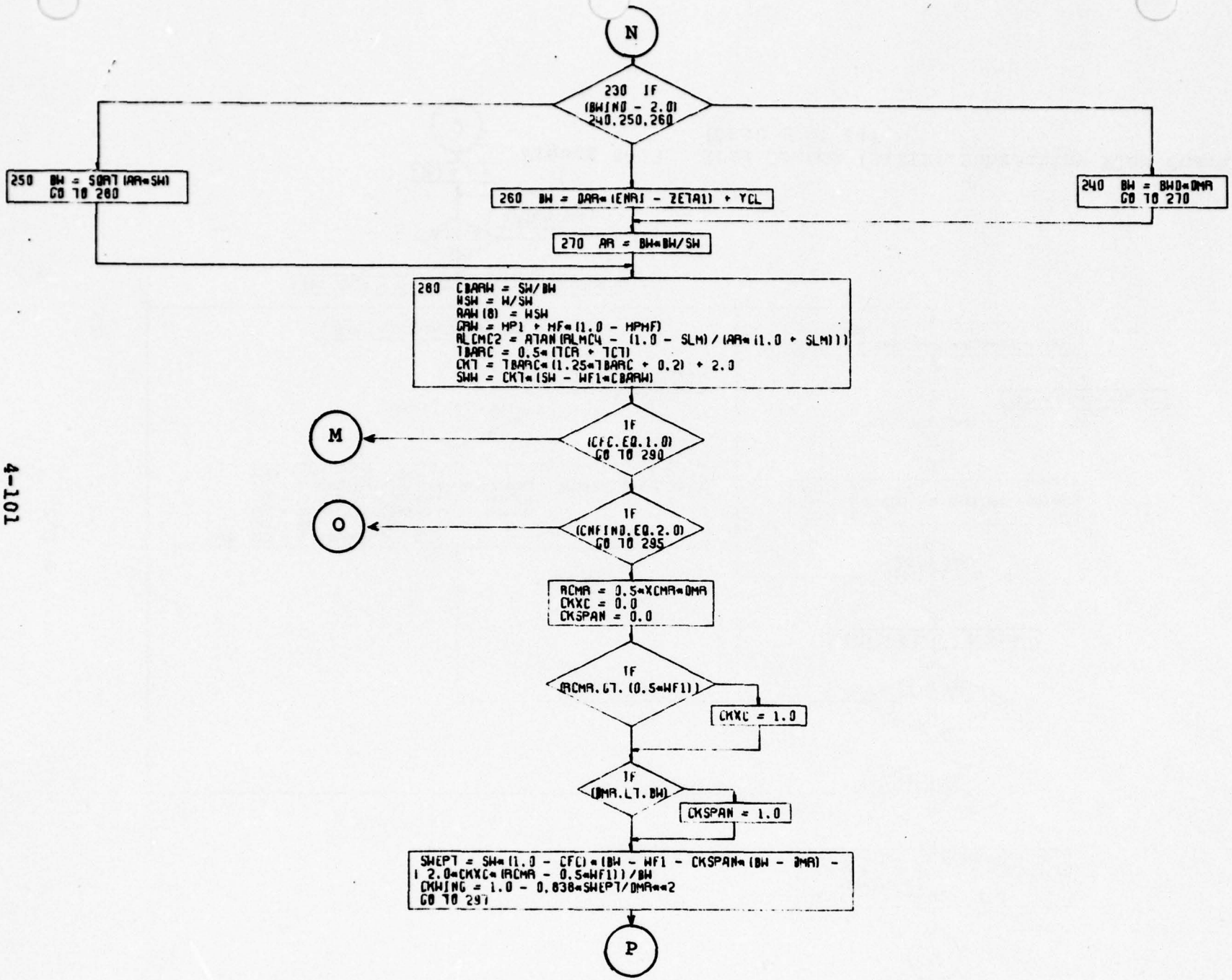

Figure 4-23. Size Trends (SIZTR) Subroutine Flow Chart (Part 7 of 13).

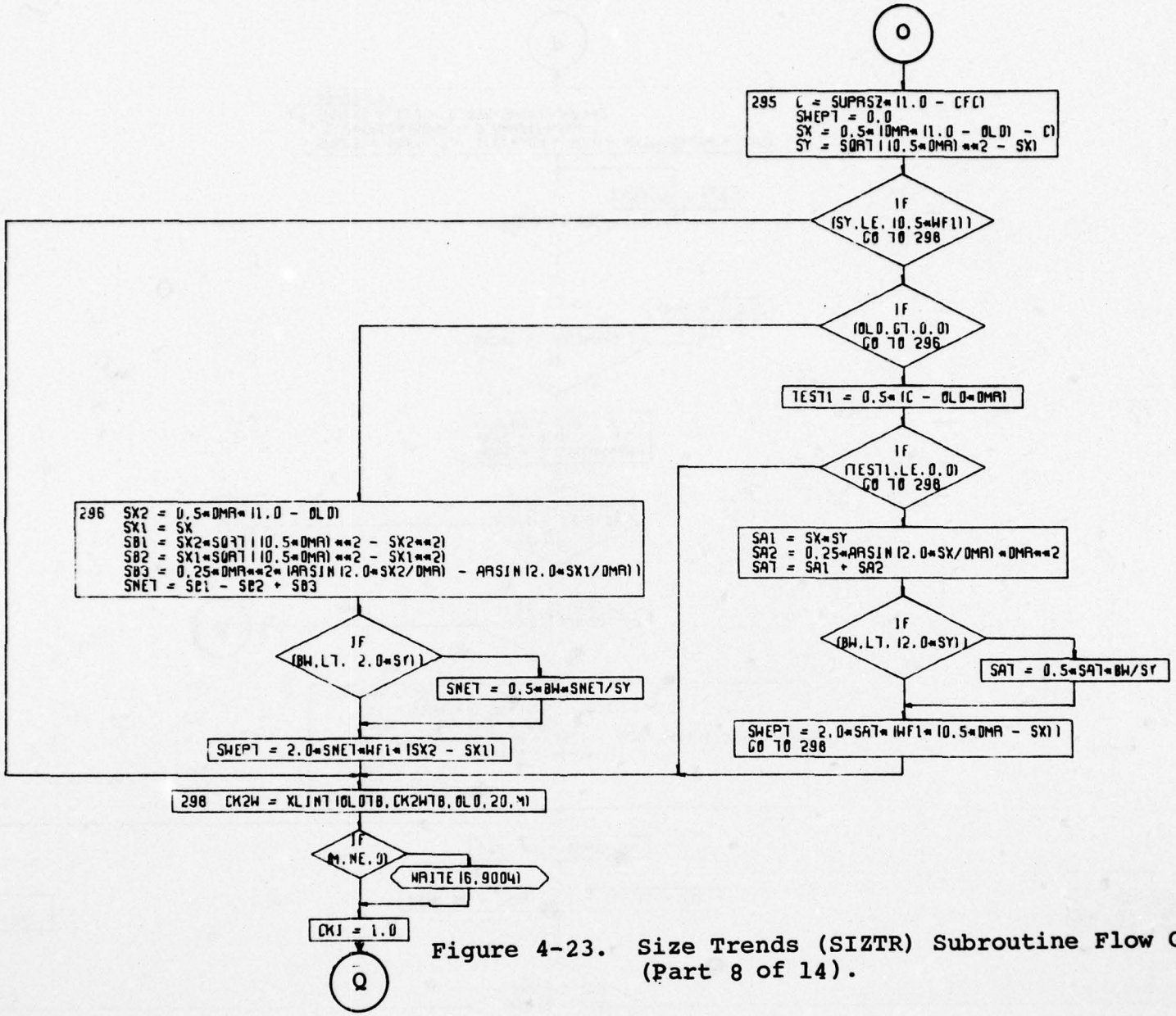

Figure 4-23. Size Trends (SIZTR) Subroutine Flow Chart (Part 8 of 14).

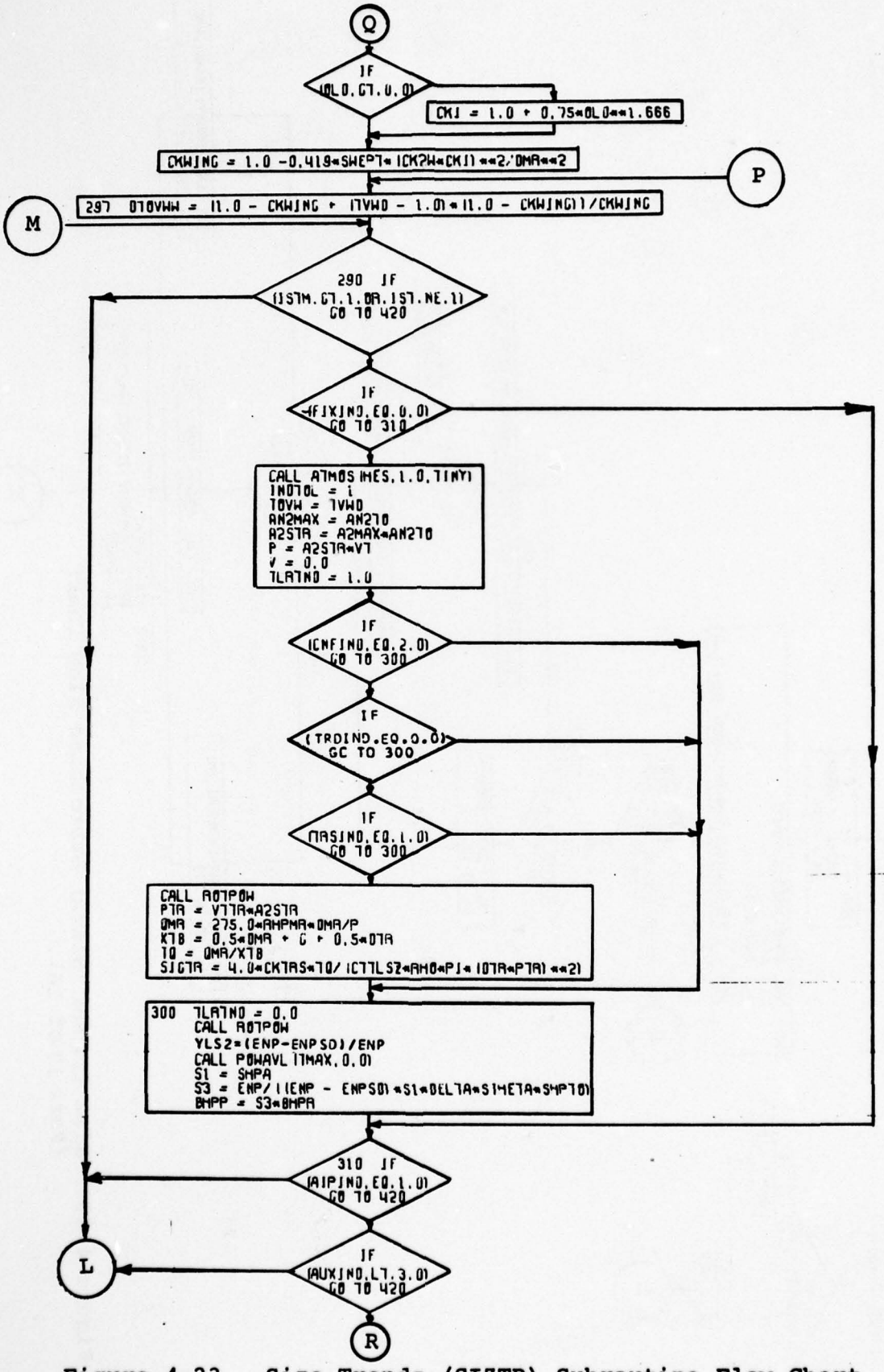

Figure 4-23. Size Trends (SIZTR) Subroutine Flow Chart (Part 9 of 14).

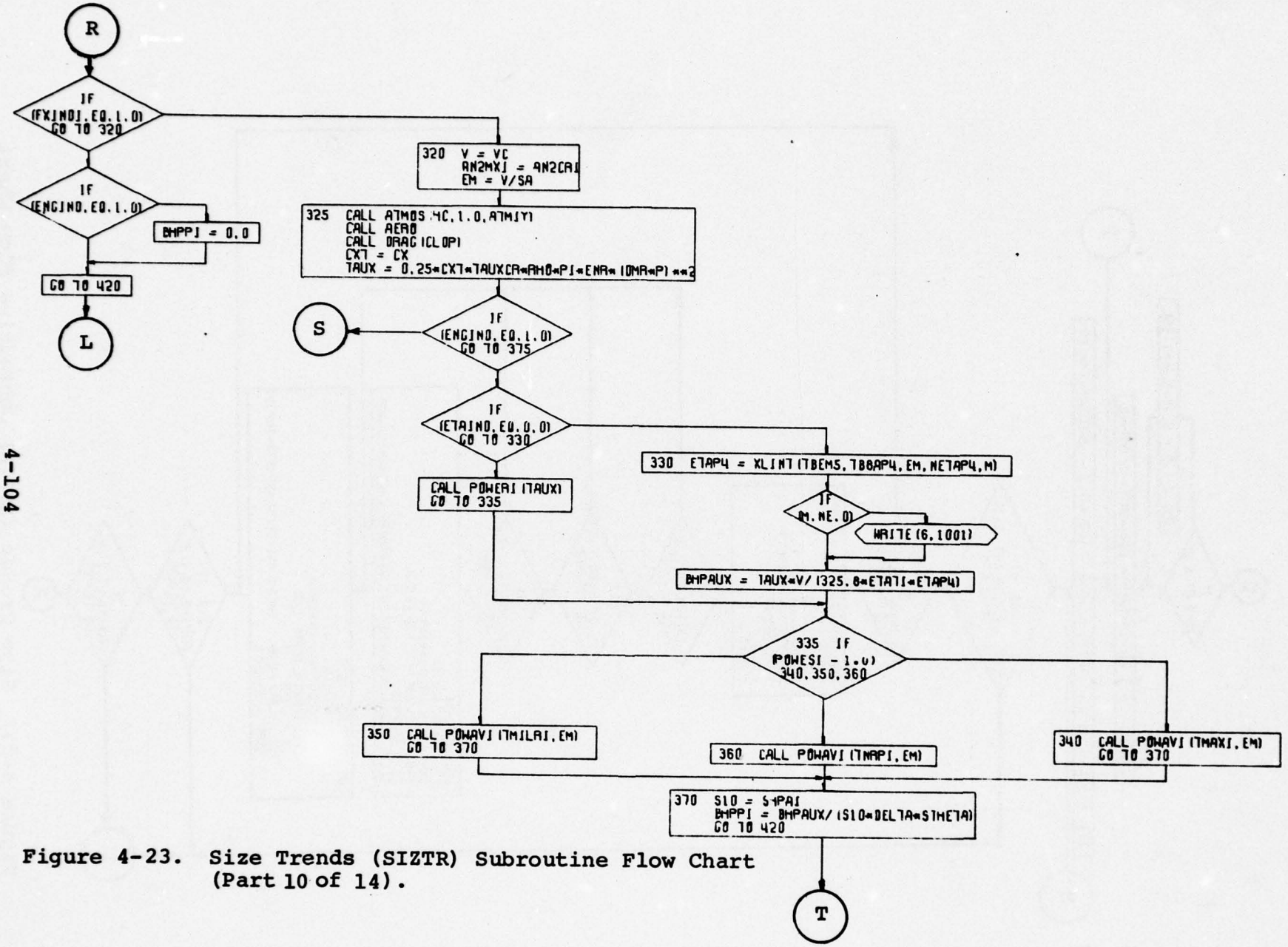

Figure 4-23. Size Trends (SIZTR) Subroutine Flow Chart (Part 10 of 14).

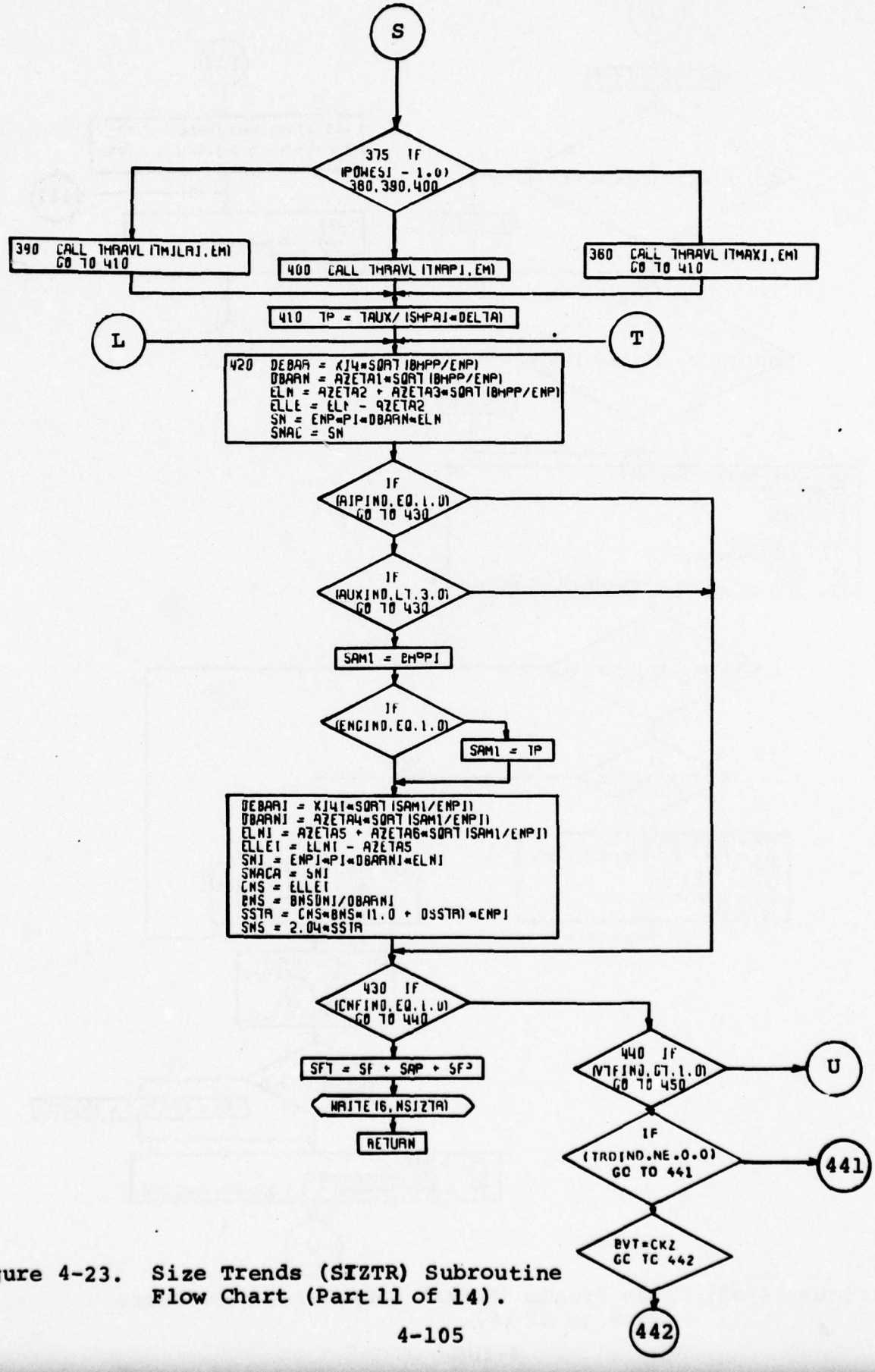

Figure 4-23. Size Trends (SIZTR) Subroutine Flow Chart (Part 11 of 14).

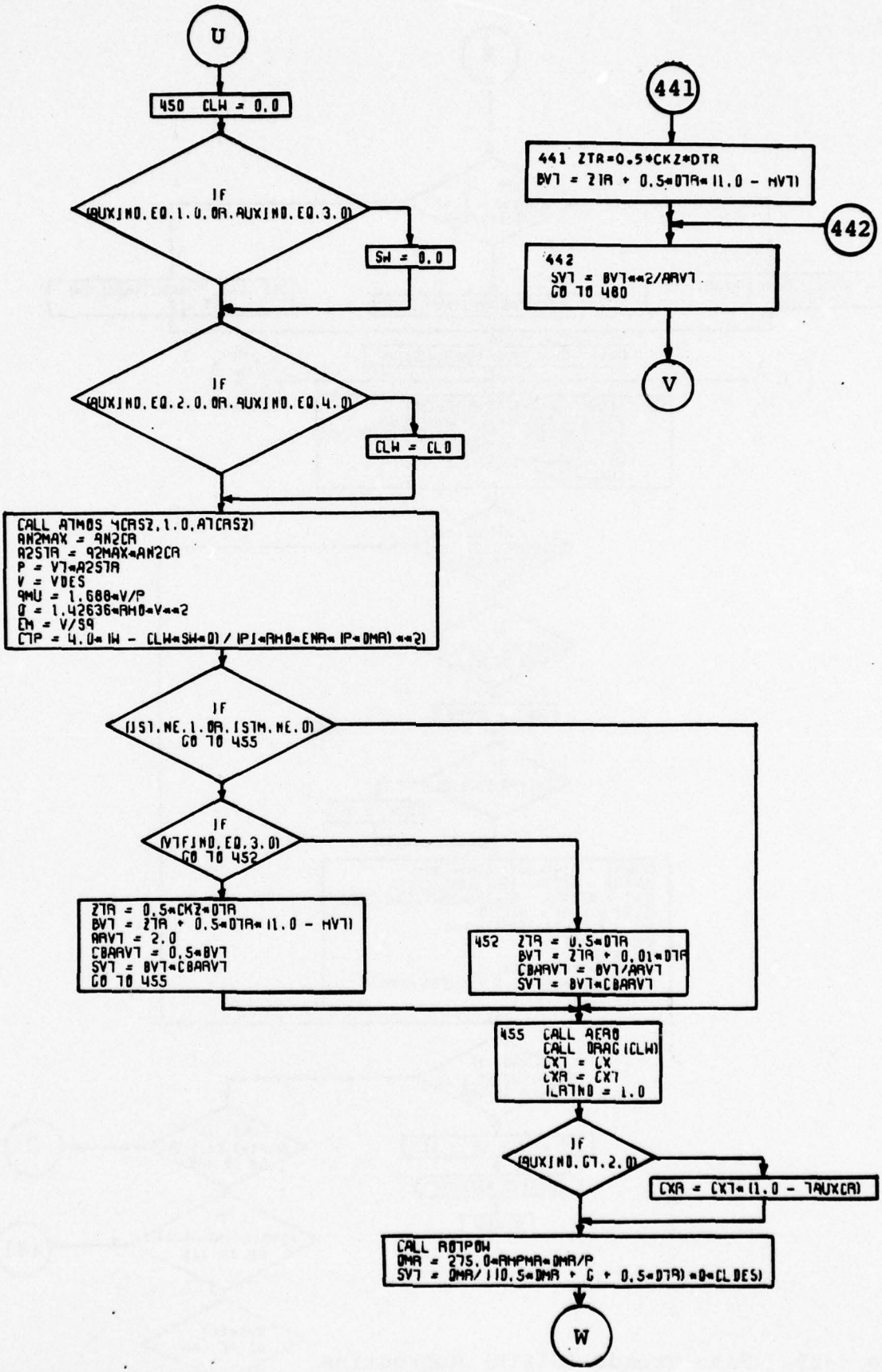

Figure 4-23. Size Trends (SIZTR) Subroutine Flow Chart (Part 12 of 14).

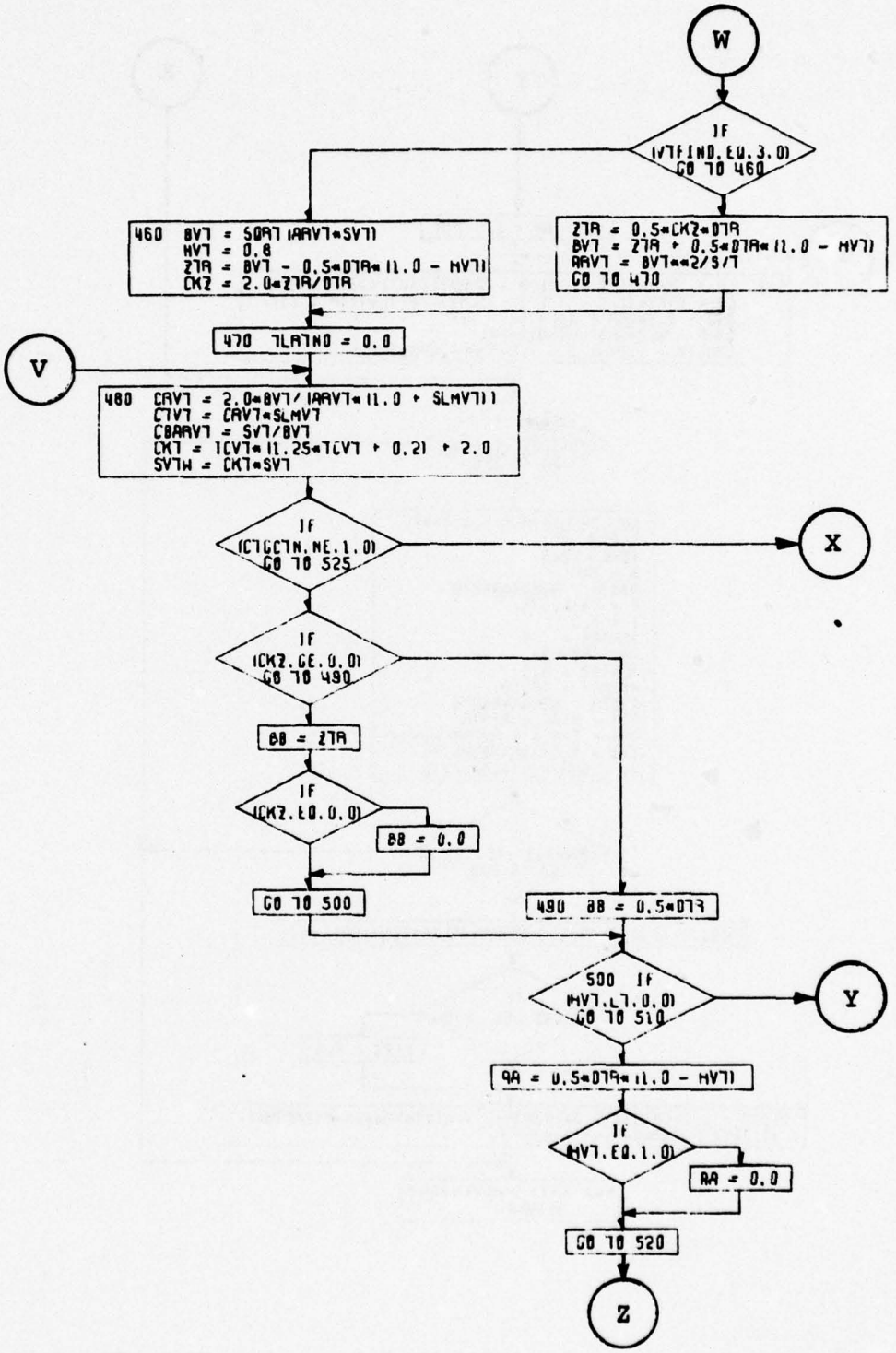

Figure 4-23. Size Trends (SIZTR) Subroutine Flow Chart (Part 13 of 14).

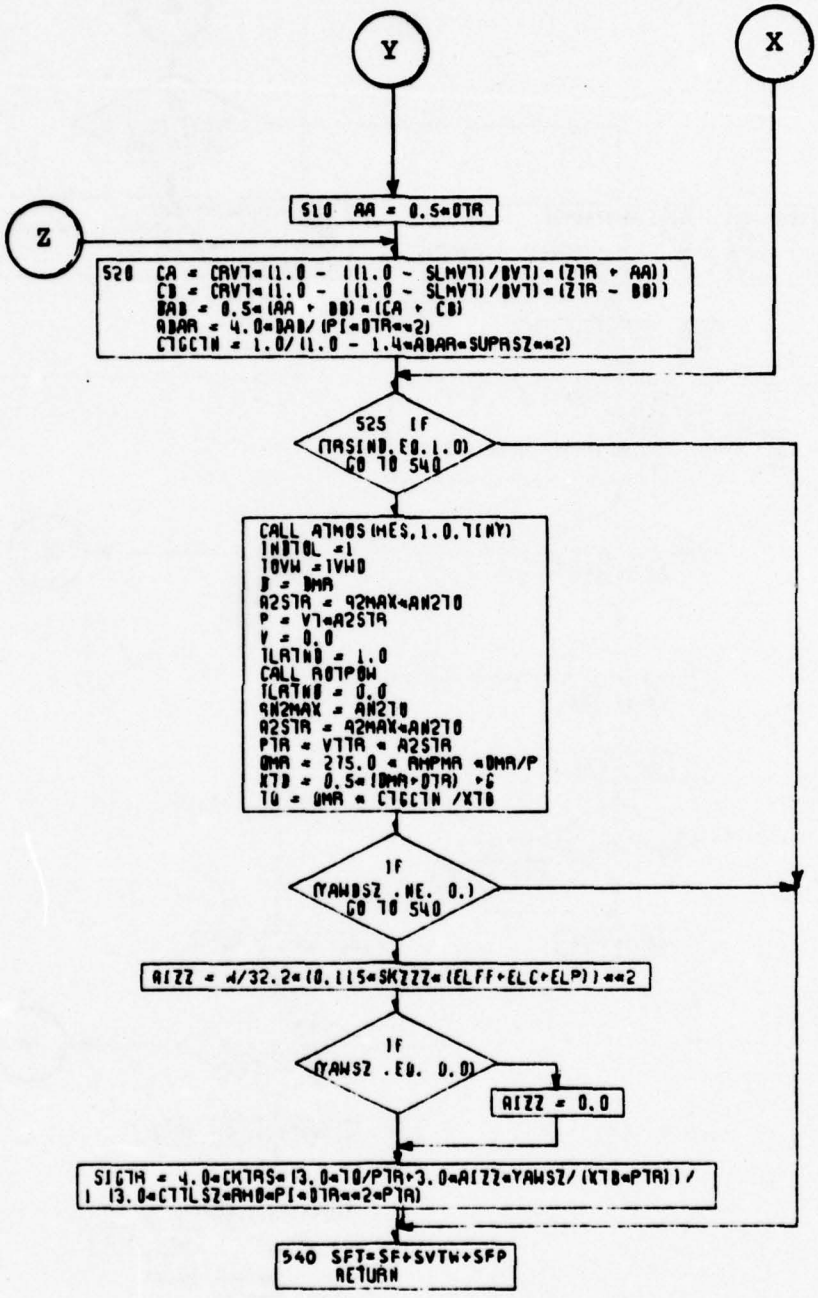

Figure 4-23. Size Trends (SIZTR) Subroutine Flow Chart (Part 14 of 14).

4.9 AERODYNAMICS CALCULATIONS SUBROUTINE

The aerodynamics subroutine calculates a series of factors (a_5, a_6, a_7, a_8, and a_9) which are used in the calculation of drag. The drag calculation has been written in the most general manner possible. Drag is assumed to be divided into profile, induced, and interference components; namely,

$$Fe_{TOT} = a_5 + \underbrace{a_6\, C_{D_{W_i}}\, S_W}_{\text{Wing Profile Drag}} + \underbrace{a_7\, C_{L_W}{}^2\, S_W}_{\text{Wing Induced Drag}} + \underbrace{a_9\, C_{L_{FIN}}{}^2\, S_{VT}}_{\text{Vertical Tail Induced Drag}} + Fe_{IF}$$

where,

Fe_{TOT} = Total configuration equivalent flat plate drag area

a_5 = Basic configuration flat plate drag area (including fuselage, rotor hubs, rotor pylons, etc).

$a_6 = K_W\ [fw\ (Re)]$

$a_7 = 1/\Pi e\ AR$

$a_9 = 1/\Pi e_{VT}\ AR_{VT}\ TFEF$

Fe_{IF} = Rotor/wing interference equivalent flat plate drag area (calculated by the program using simplified Prandtl Bi-Plane Theory).

The basic configuration flat plate drag area may be calculated in two different ways: by a detailed build up, or by a trend (see Figure 4-24). The wing profile drag is assumed to be a function of lift coefficient, as specified by an input table.

If the user elects to determine the basic configuration flat plate drag area (a_5) by build up (DRGIND = 1), then profile drag coefficients ($C_{D_{HT}}$, $C_{D_{VT}}$, etc.) and form factors (K_{HT}, K_{VT}, etc.) for each component are input to the program, a_5 then being calculated from the following relationship:

$$a_5 = \underbrace{.00287\, K_F\, S_F\, [f_F\ (Re)]}_{\text{Fuselage Profile Drag}} + \underbrace{K_{FP}\, C_{D_{FP}}\, FA_{FP}}_{\text{Forward (Main) Rotor Pylon Profile Drag}}$$

DRGIND = 1

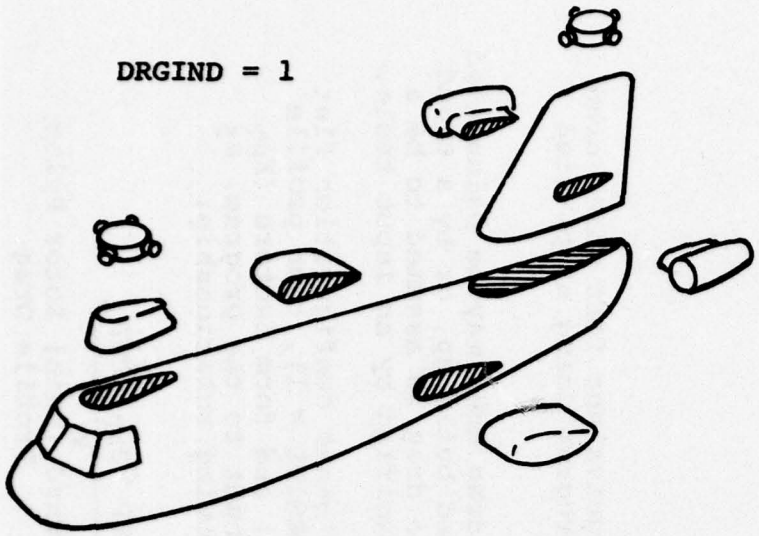

DRGIND = 2

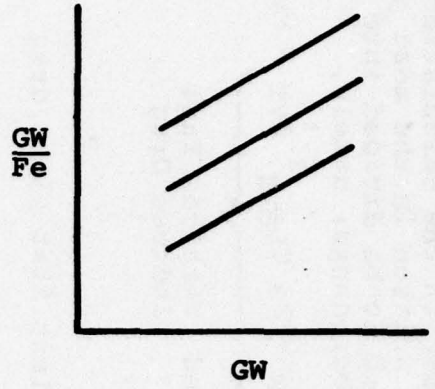

$$Fe_{TOT} = \sum KC_D S\ f\ (Re) + \Delta Fe_{HUB(S)}$$

where:

$$f\ (Re) = \left[1 + \frac{1}{7} \log_{10} \left(\frac{Re}{10^7}\right)\right]^{-2.6}$$

$$Re = (Re/\ell)\,\ell_{CHAR}$$

$$Fe_{TOT} = \left(\frac{W_{G_O}}{(GW/Fe)}\right)\left[\frac{W_G}{W_{G_O}}\right]^{K_{FED}}$$

Figure 4-24. Parasite Drag Buildup Options.

$$\underbrace{+ K_{AP}\, C_{D_{AP}}\, S_{AP}\, [f_{AP}\,(Re)]}_{\text{Aft Rotor Pylon Profile Drag}} + \underbrace{K_{VT}\, C_{D_{VT}}\, S_{VT}\, [f_{VT}\,(Re)]}_{\text{Vertical Fin Profile Drag}}$$

$$\underbrace{+ K_{HT}\, C_{D_{HT}}\, S_{HT}\, [f_{HT}\,(Re)]}_{\text{Horizontal Tail Profile Drag}} + \underbrace{K_{N}\, C_{D_{N}}\, S_{N}\, [f_{N}\,(Re)]}_{\text{Primary Engine Nacelle(s) Profile Drag}}$$

$$\underbrace{+ K_{NI}\, C_{D_{NI}}\, S_{NI}\, [f_{NI}\,(Re)]}_{\text{Auxiliary Independent Engine Nacelle Profile Drag}} + \underbrace{K_{NS}\, C_{D_{NS}}\, S_{NS}\, [f_{NS}\,(Re)]}_{\text{Auxiliary Independent Engine Nacelle Strut Profile Drag}}$$

$$+ \underbrace{\Delta Fe_{MRH}\, N_R}_{\text{Main Rotor Hub(s) Total Drag}} + \underbrace{\Delta Fe_{TRH}}_{\text{Tail Rotor Hub Total Drag}} + \underbrace{\Delta Fe\, [f_F\,(Re)]}_{\text{Miscellaneous Drag}}$$

The terms $f_W\,(Re)$, $f_F\,(Re)$, $f_{VT}\,(Re)$, etc., are Reynolds number functions for the wing, fuselage, vertical tail, etc., which reflect the variation of skin friction coefficient with Reynolds number. The function which is used is a normalized form of the Prandtl-Schlichting turbulent flat plate skin friction equation:

$$f(Re) = \frac{C_f}{C_{f_{Re=10^7}}} = \left[1 + \frac{1}{7} \log_{10} \frac{R_e}{10^7}\right]^{-2.6}$$

The program user inputs a value for average Reynolds number per foot for the mission and the program then calculates the Reynolds' number for each component of the aircraft and uses the Reynolds' number functions $f_W\,(Re)$, $f_F\,(Re)$, etc., to determine the variation in component drag as the aircraft dimensions change during the iteration on gross weight. The individual profile drag coefficients, $C_{D_{VTi}}$, $C_{D_{HTi}}$, etc., are input at a reference Reynolds number of 10^7.

Particular care must be exercised in the input of data required for calculating the hub drag, as this particular component can typically account for as much as 1/2 to 2/3 of the

total parasite drag of a helicopter. The hub drag calculation method (Reference 8) used in this program is based on the following relationships:

$$\Delta Fe_{HUB} = \underbrace{Fe_{HUB_{CS}}}_{\text{Hub center}} + \underbrace{Fe_{SH}}_{\text{Rotor shanks}} + \underbrace{Fe_{INT}}_{\text{Misc hub/shank Interference}}$$

where:

$$Fe_{HUB_{CS}} = f\left\{C_{D_{CS}} \text{ (Hub projected frontal area)}\right\}$$

$$Fe_{SH} = f\left\{C_{D_{SH}}, \text{ Number of shanks, shank projected frontal area, and local advance ratios at the hub/shank and shank/rotor blade interfaces}\right\}$$

Typical values of hub center section and shank drag coefficients are illustrated in Figure 4-25. A few notes of caution on the use of values such as are contained in Figure 4-25 is in order. First, estimates of the Reynolds number of the hub or shank sections to be used should be made in order to establish whether the sections are sub or super critical. Second, while 2-dimensional section drag coefficients are appropriate for use with shanks of extended length, test data indicates that 3-dimensional coefficients are more representative for low aspect ratio shanks bounded by lower drag shapes (for example, a short stubby shank bounded on one side by a faired hub and on the other side by the root end of the rotor blade). Figure 4-26 illustrates the hub geometry and interference drag factors implicitly assumed in this program. If the actual hub geometry or interference drag variation desired by the user differs appreciably from these, the differences can be reflected by ratioing the input drag coefficients $C_{D_{CSMR}}$, $C_{D_{SHMR}}$, $C_{D_{CSTR}}$, and $C_{D_{SHTR}}$ accordingly. Table 4-5 summarizes these corrections.

If it is desired to calculate a_5 by use of a drag trend (DRGIND = 2), the following relationship then obtains:

$$a_5 = \left[\frac{W_{G_O}}{(G_W/Fe)}\right]\left[\frac{W_G}{W_{G_O}}\right]^{K_{FED}}$$

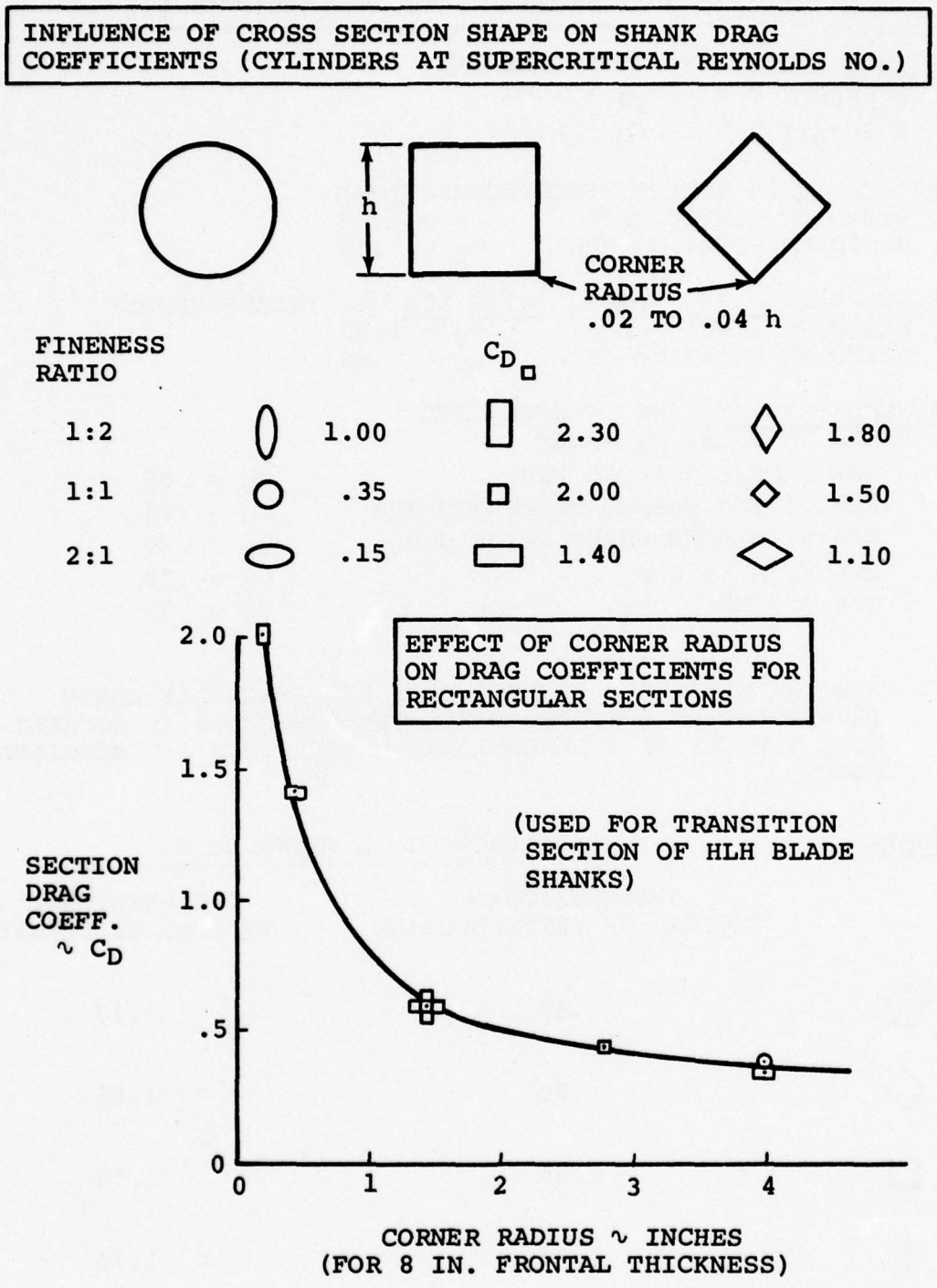

Figure 4-25. Typical Hub and Shank Drag Coefficients (Part 1 of 2).

HUB CENTERSECTION DRAG COEFFICIENTS

CH-47 HUB (INCLUDING INTERFERENCE)
- @ $\alpha_{FUSE} = 0$ $C_D = 1.61$
- @ $\alpha_{SHAFT} = 0$ $C_D = 1.91$

CH-47 HUB (WITH INTERFERENCE CORRECTION)
- BASED ON STATIC AREA $C_D = 1.03$
- BASED ON ROTATING AREA $C_D = .88$

DRTS/12' DIA. - 3/6 BLADED ROTOR HUB (NO INTERFERENCE)
- BASED ON STATIC AREA $C_D = 1.03$
- BASED ON ROTATING AREA $C_D = .88$

NASA MEMO 1-31-59L (NO INTERFERENCE)
- BASED ON ROTATING AREA
  - HUB 1 CYLINDRICAL HUB $C_D = .65$
  - HUB 2 TWO BLADED TEETERING HUB $C_D = .63$
  - HUB 3 HILLER SERVO ROTOR HUB $C_D = .70$
  - HUB 4 H-19 HUB $C_D = .72$
  - HUB 5 HUP-2 HUB $C_D = .55$

NOTE: HUB CENTERSECTION COEFFICIENTS ARE GENERALLY LOWER THAN MIGHT BE EXPECTED SINCE CENTERSECTION IS USUALLY MORE TYPICAL OF 3 DIMENSIONAL RATHER THAN 2 DIMENSIONAL FLOW

SHAPE	C_D @ SUBCRITICAL REYNOLDS NO.	
	3-DIMENSIONAL TYPICAL OF CENTERSECTION	2-DIMENSIONAL TYPICAL OF SHANKS
○	.47	1.17
◇	.80	1.55
□	1.05	2.05
|	1.17	1.98

Figure 4-25. Typical Hub and Shank Drag Coefficients (Part 2 of 2).

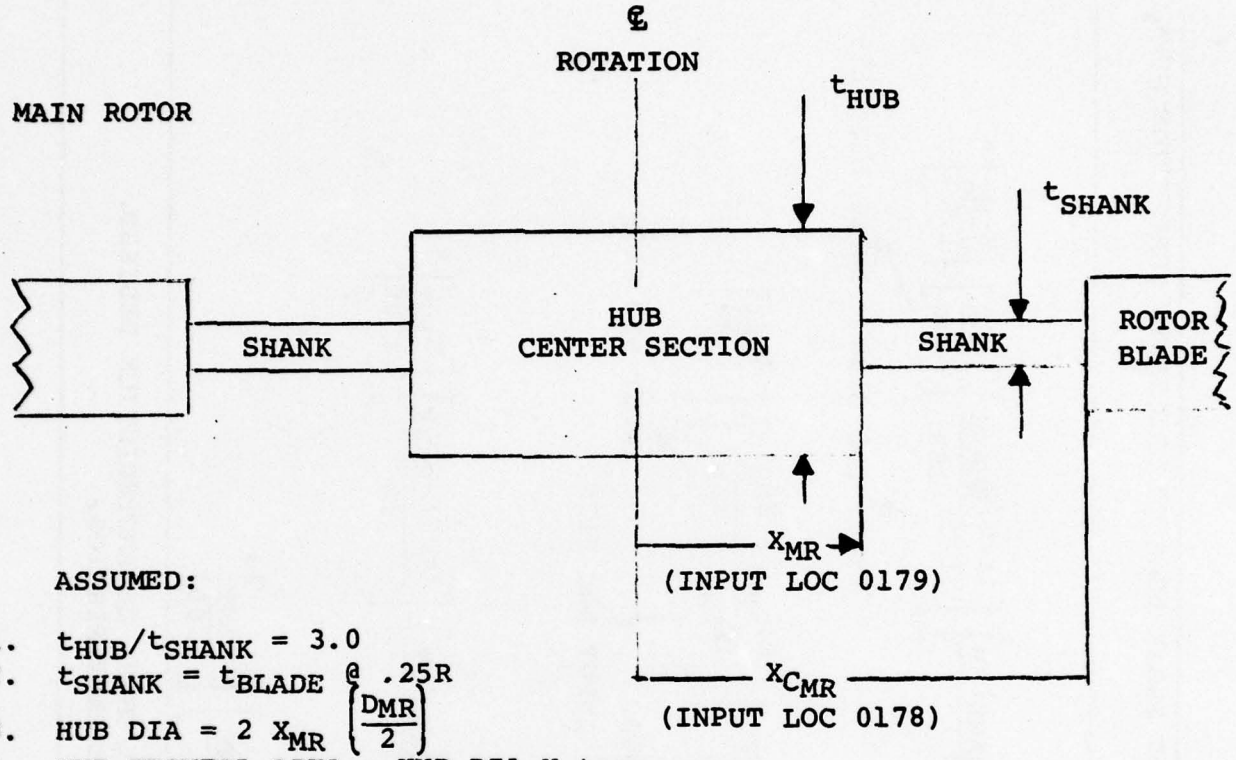

ASSUMED:

1. $t_{HUB}/t_{SHANK} = 3.0$
2. $t_{SHANK} = t_{BLADE}$ @ .25R
3. HUB DIA = 2 X_{MR} $\left(\frac{D_{MR}}{2}\right)$
4. HUB FRONTAL AREA = HUB DIA X t_{HUB}
5. SHANK FRONTAL AREA = $(X_{C_{MR}} - X_{MR})\left(\frac{D_{MR}}{2}\right) t_{SHANK}$
6. $K_{INT} = 1.00$

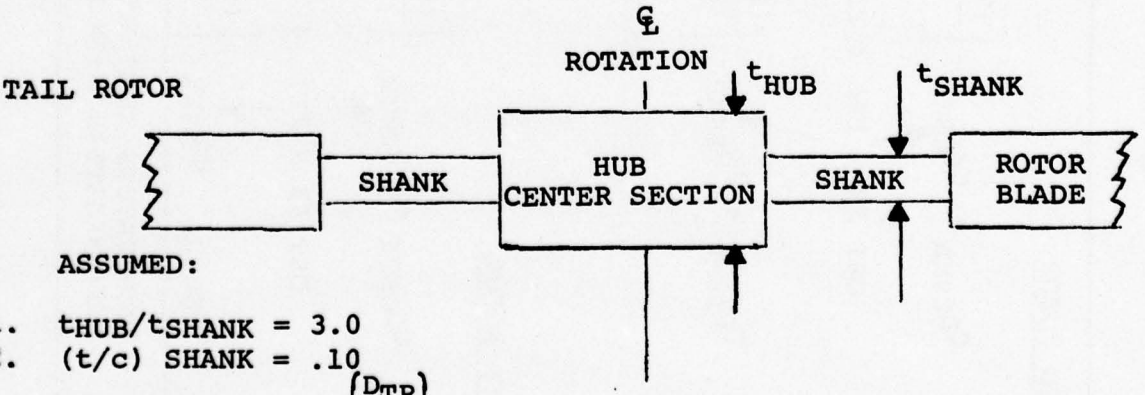

ASSUMED:

1. $t_{HUB}/t_{SHANK} = 3.0$
2. (t/c) SHANK = .10
3. HUB DIA = 2 X_{TR} $\left(\frac{D_{TR}}{2}\right)$
4. HUB FRONTAL AREA = HUB DIA X t_{HUB}
5. SHANK FRONTAL AREA = $(X_{C_{TR}} - X_{TR})\left(\frac{D_{TR}}{2}\right)$ t_{SHANK}
6. $K_{INT} = 1.00$

Figure 4-26. Rotor Hub/Shank Geometry Used in Program for Hub Drag Calculations.

TABLE 4-5. HUB AND SHANK DRAG COEFFICIENTS CORRECTION SUMMARY

MAIN ROTOR

$$C_{D_{CSMR}} = C_{D_{CSMR}} \left[\frac{(t_{HUB}/t_{SHANK})_{MR}}{3.0}\right]\left[\frac{(t/C)_{SHANK}}{(t/C)_{.25R}}\right]\left[\frac{X_{MR}}{X_{MR}}\right]\left[\frac{K_{INT}}{1.00}\right]^{*}$$

OBT FROM FIG 4-25 — INPUT LOC 0180 — INPUT LOC 0179

$$C_{D_{SHMR}} = C_{D_{SHMR}} \left[\frac{(t/C)_{SHANK}}{(t/C)_{.25R}}\right]\left[\frac{(X_{C_{MR}} - X_{MR})}{(X_{C_{MR}} - X_{MR})}\right]\left[\frac{K_{INT}}{1.00}\right]^{*}$$

INPUT LOC 0180 — INPUT LOC 0178 — INPUT LOC 0179

TAIL ROTOR

$$C_{D_{CSTR}} = C_{D_{CSTR}} \left[\frac{(t_{HUB}/t_{SHANK})_{TR}}{3.0}\right]\left[\frac{(t/C)_{SHANK}}{.10}\right]\left[\frac{K_{INT}}{1.00}\right]^{*}$$

OBT FROM FIG. 4-25

$$C_{D_{SHTR}} = C_{D_{SHTR}} \left[\frac{(t/C)_{SHANK}}{.10}\right]\left[\frac{K_{INT}}{1.00}\right]^{*}$$

*NUMERATORS SHOW ACTUAL HUB/SHANK CHARACTERISTICS DESIRED.
DENOMINATORS SHOW FIXED CHARACTERISTICS.

where,

W_{G_O} = Initial "guess" at iterated helicopter gross weight (input LOC 0023). Note, this is also the value of gross weight at which the input value of (GW/Fe) is obtained. (See sketch below)

W_G = "Iterated" or final design gross weight of the aircraft.

(GW/Fe) = "Drag Loading" input at a given gross weight (in this case W_{G_O}).

K_{FED} = Exponent defining the slope of a typical logarithmic drag trend.

The following sketch should serve to illustrate these facts more clearly.

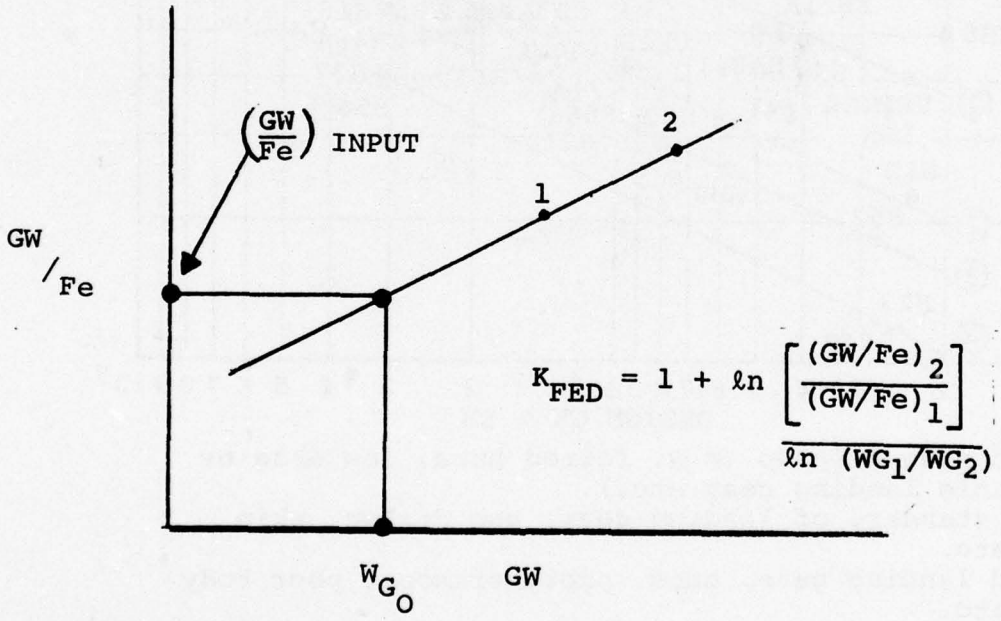

Figure 4-27 illustrates typical parasite drag area trend for various helicopters and fixed-wing aircraft.

The drag routine may be used in many different ways. The four most common applications are:

1. Drag Build up for a New Aircraft Design - This is best illustrated by first referring to the complete drag breakdowns of the hypothetical helicopters shown in Tables 4-6 and 4-8. The input C_D for each component (C_{DWi}, $_{DHTi}$,

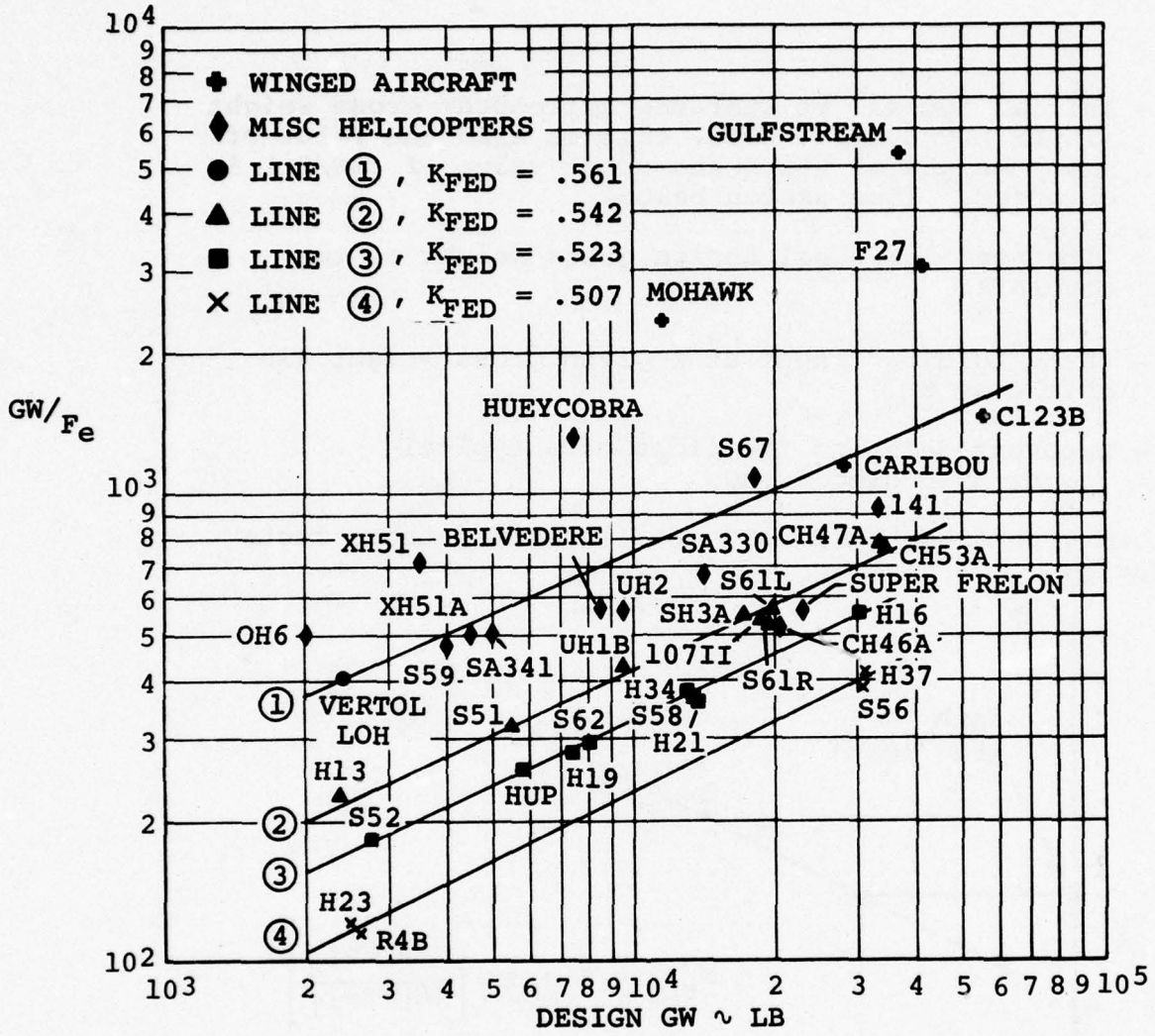

1. Advanced drag cleanup (e.g. faired hubs, low drag or retractable landing gear etc.).
2. Current standard of landing gear, hub design, skin finish etc.
3. Unfaired landing gear, hubs, protuberances, poor body shape, etc.
4. Exceptionally dirty configuration due to such things as open construction, exceptionally dirty engine installation, landing gear, etc.

NOTE: The drag area for the winged aircraft excludes the C_DA of the wings, to be compatible with the helicopters.

Figure 4-27. Typical Parasite Drag Trends.

etc.) may be used to represent the reference C_f at Re = 10^7 and at the mean flight Mach number. Drag increases above the drag of a flat plate such as three dimensional effects, interference, roughness, and excrescences may be accounted for by the multiplying factors (K_W, K_{HT}, etc.). Miscellaneous drag increments can be summed and input as ΔFe. Examples of these increments are cooling momentum, trim, and airconditioning. The K factor for wings and tails should include a factor for relating the wetted area of the surface to the planform area. An example of the program inputs for the hypothetical helicopters of Tables 4-6 and 4-8 are shown in Tables 4-7 and 4-9.

2. Study of the Sensitivity of Aircraft Size with Respect to the Component Drag or the Total Drag about a Certain Drag Level - Let the total drag of each component be contained in the drag coefficient of each component, C_{DWi}, C_{DHTi}, C_{DVTi}, etc. The change in drag of each component will then be determined by the values assigned to the component multiplying factor, K_W, K_{HT}, K_{VT}, etc. The fuselage drag change, however, will have to be represented by an incremental value of Δfe.

3. Use of Component Drag Data from Wind Tunnel Test - Let the drag of each component (including interference) be contained in the component drag coefficient, C_{DWi}, C_{DHTi}, C_{DVTi}, etc. The skin friction drag must first be corrected to Re = 10^7. The drag increase due to items found only on the full scale airplane would then be represented by the factors and increments. Increases due to excrescences and roughness are represented by the factors, K_W, K_{HT}, K_{VT}, etc. Increments such as inlets, cooling, trim, and afterbody drag, can be summed and represented by Δfe.

4. Simplified Drag Model for Parametric Studies - The program is often used to study the influence of variations of parameters, such as disc loading, solidity, etc. on the size of a helicopter. During these studies, it is often not desirable to go into the design depth required in the three applications above. Use of the drag trends (DRGIND = 2) is therefore dictated by this requirement.

Figure 4-28 is a flow chart of this subroutine.

TABLE 4-6. DRAG BREAKDOWN FOR HYPOTHETICAL SINGLE ROTOR COMPOUND HELICOPTER $R_e/FT = 1.56 \times 10^6$ (V = 189 KT)

COMPONENT	WETTED AREA	C_f	INCREMENT %	INCREMENT Δf_e	f_e FT^2
FUSELAGE	1949.	0.00191		3.72	
3-Dimensional Effects			12.3	0.46	
Excrescences			7.0	0.29	6.60
Canopy				0.20	
Afterbody				1.93	
WING	345.	0.0030		1.04	
3-Dimensional Effects			29.3	0.31	
Excrescences			2.0	0.03	1.59
Flaps, Slats, Ailerons, Spoilers			-	-	
Body Interference			15.6	0.21	
MAIN ROTOR PYLON	286.				
Basic F_e (including interference and 3-D effects) C_{D_o} (Based on frontal area) = 0.10	Frontal Area = 26.6 Ft^2			2.66	3.19
Excrescences			20.0	0.53	
HORIZONTAL TAIL	246.	0.00305		0.75	
3-Dimensional Effects			43.4	0.33	
Excrescences			7.0	0.08	1.60
Interference			40.7	0.44	
VERTICAL TAIL	210.	0.00270		0.57	
3-Dimensional Effects			22.3	0.13	
Excrescences			7.0	0.05	1.03
Interference			40.7	0.28	
PRIMARY ENGINE NACELLES	188.	0.00278		0.52	
3-Dimensional Effects			40.4	0.21	
Excrescences			25.0	0.18	1.72
Interference			75.0	0.55	
Inlets				0.26	
ROTOR HUBS (TOTAL)					
Main Rotor Hub (center section)				6.22	
Main Rotor Hub (shanks)				5.85	
Tail Rotor Hub (center section)				0.48	14.82
Tail Rotor Hub (shanks)				0.67	
Total Interference (main & tail rotor)				1.60	
MISC: Roughness (50% of $C_f A_{WET}$				0.54	
MISC: Cooling				0.50	1.34
MISC: Trim				-	
MISC: Air Conditioning				0.30	
TOTALS ft^2	3224				31.89

NOTES: (1) Basic $f_e = (C_f A_{WET}) + (3\text{-D Effects } \Delta f_e)$

(2) Excrescences and interference are % of basic f_e

TABLE 4-7. SUMMARY OF AERODYNAMICS INPUT FOR COMPOUND HELICOPTER OF TABLE 4-6

GENERAL

$C_{D_{Wi}} = C_{D_{HT}} = C_{D_{VT}} = C_{D_N} = C_F = 0.00287 \; @ \; R_e = 10^7 \quad (R_e/\ell)_i = 1.56 \times 10^6$

COMPONENTS

$S_F = 1949$ FUSELAGE WETTED AREA

FUSELAGE

$$K_F = (1+0.123)\,(1+0.07) + 0.05 = 1.25 \qquad \Delta F_e = \left(\frac{0.00287}{0.00191}\right)(1.93 + 0.20 + 0.26 + 0.50 + 0.30) = 4.80$$

3-D effects; excr; roughness; Body C_F; Afterbody; Canopy; Nacelle inlets; Cooling; Air Condit.

WING

$$K_W = (1.80)\left(A_{wet}/S_W\right)\,[(1 + 0.293)\,(1 + 0.02 + 0.156) + 0.05] = 2.83$$

3-D effects; excr; interf; roughness

MAIN PYLON

$$K_{FP} = 1 + 0.20 + 0.05 = 1.25 \qquad C_{D_{FP}} = 0.10$$

excr; roughness

HOR & VERTICAL TAIL

$$K_{HT} = 2.02\,(A_{wet}/S_{HT})\,[(1 + 0.434)\,(1 + 0.07 + 0.407) + 0.05] = 4.38$$

$$K_{VT} = 2.06\,(A_{wet}/S_{VT})\,[(1 + 0.223)\,(1 + 0.07 + 0.407) + 0.05] = 3.83$$

3-D effects; excr; interf; roughness

PRIMARY ENGINE NACELLES

$$K_N = (1 + 0.404)\,[1 + 0.25 + 0.75] + 0.05 = 2.86$$

3-D effects; excr; interf; roughness

ROTOR HUBS

$C_{D_{C_{SMR}}} = 0.75$ $\quad C_{D_{SHMR}} = 1.4$ $\quad K_{HPIM} = 1.3$

$C_{D_{CSTR}} = 0.75$ $\quad C_{D_{SHTR}} = 1.4$ $\quad K_{HPSM} = 0.3$

MISC

Cooling, Airconditioning, and nacelle inlets included in fuselage ΔF_e

TABLE 4-8. TYPICAL DRAG SUMMARY
DRAG BREAKDOWN FOR HYPOTHETICAL TANDEM ROTOR WINGED HELICOPTER $R_e/ft = 1.49 \times 10^6$ (V = 181 KT)

COMPONENT	WETTED AREA	C_f	INCREMENT %	INCREMENT f_e	f_e FT^2
FUSELAGE	1640.	0.00208		3.41	
3-Dimensional Effects			12.2	0.42	6.52
Excrescences			7.0	0.27	
Canopy				0.20	
Afterbody				2.22	
WING	389.	0.0030		1.16	
3-Dimensional Effects			29.3	0.34	
Excrescences			2.0	0.03	1.77
Flaps, Slats, Ailerons, Spoilers			-	-	
Body Interference			15.2	0.24	
FORWARD PYLON	41.5				
Basic f_e (including interference and 3-D effects) C_{D_o} (Based on Frontal Area) = 0.15	(Frontal Area = 9.5 Ft^2)			1.41	1.69
Excrescences			20.0	0.28	
AFT PYLON	421.	0.00252		1.06	
3-Dimensional Effects			46.4	0.49	
Excrescences			20.0	0.31	2.38
Interference			33.5	0.52	
PRIMARY ENGINE NACELLE	188.	0.00278		0.52	
3-Dimensional Effects			40.4	0.21	
Excrescences			25.0	0.18	1.72
Interference			75.0	0.55	
Inlets				0.26	
ROTOR HUBS (TOTAL)				10.4	
Main rotor hub (center section, total)				7.78	19.48
Main rotor hub (shanks, total)				1.30	
Hub/Shank Interference (total)					
MISC: Roughness (5.0% of $C_f A_{WET}$)				0.45	
MISC: Cooling				0.50	1.25
MISC: Trim				-	
MISC: Air Conditioning				0.30	
TOTALS ft^2	2679.5				34.81

NOTES: (1) Basic $f_e = (C_f A_{WET}) + (3\text{-D Effects } \Delta f_e)$

(2) Excrescences and interference are % of basic f_e

TABLE 4-9. SUMMARY OF AERODYNAMICS INPUT FOR HELICOPTER OF TABLE 4-8

GENERAL	
	$C_{D_{Wi}} = C_{D_{AP}} = C_{DN} = C_F = 0.00287 \text{ @ } R_e = 10^7 \quad (Re/\ell)_i = 1.49 \times 10^6$
COMPONENTS	$S_F = 1640$ FUSELAGE WETTED AREA
FUSELAGE	$K_F = (1+0.122)\ (1+0.07)\ +0.05 = 1.25 \quad \Delta F_e = \left(\frac{0.00287}{0.00208}\right)\ (2.22+0.20+0.26+0.50+0.30) = 4.81$ (3-D effects; excr; roughness; Body C_F; Afterbody; Canopy; Nacelle inlets; cooling air condit)
WING	$K_W = \left(\frac{A_{wet}}{Sw}\right)\ (1.80)\ [(1 + 0.34)\ (1 + 0.02 + 0.152)\ + 0.05] = 2.92$ (3-D effects; excr; interf; roughness)
FORWARD PYLON	$K_{FP} = 1 + 0.20 + 0.05 + 1.25 \quad C_{D_{FP}} = 0.15$ (excr; roughness)
AFT PYLON	$K_{AP} = \left(\frac{S_{PAP}}{A_{wet}}\right)\ (0.455)\ [(1 + 0.464)\ (1 + 0.20 + 0.335) + 0.05] = 1.045$ (3-D effects; excr; interf; roughness)
PRIMARY ENGINES NACELLES	$K_N = (1 + 0.404)\ [1 + 0.25 + 0.75] + 0.05 = 2.86$ (3-D effects; excr; interf; roughness)
ROTOR HUBS	$C_{D_{C_{SMR}}} = 0.75 \quad K_{HPIM} = 1.3 \quad C_{D_{SHMR}} = 1.4$
MISC	Cooling, air conditioning and nacelle inlets included in fuselage ΔF_e

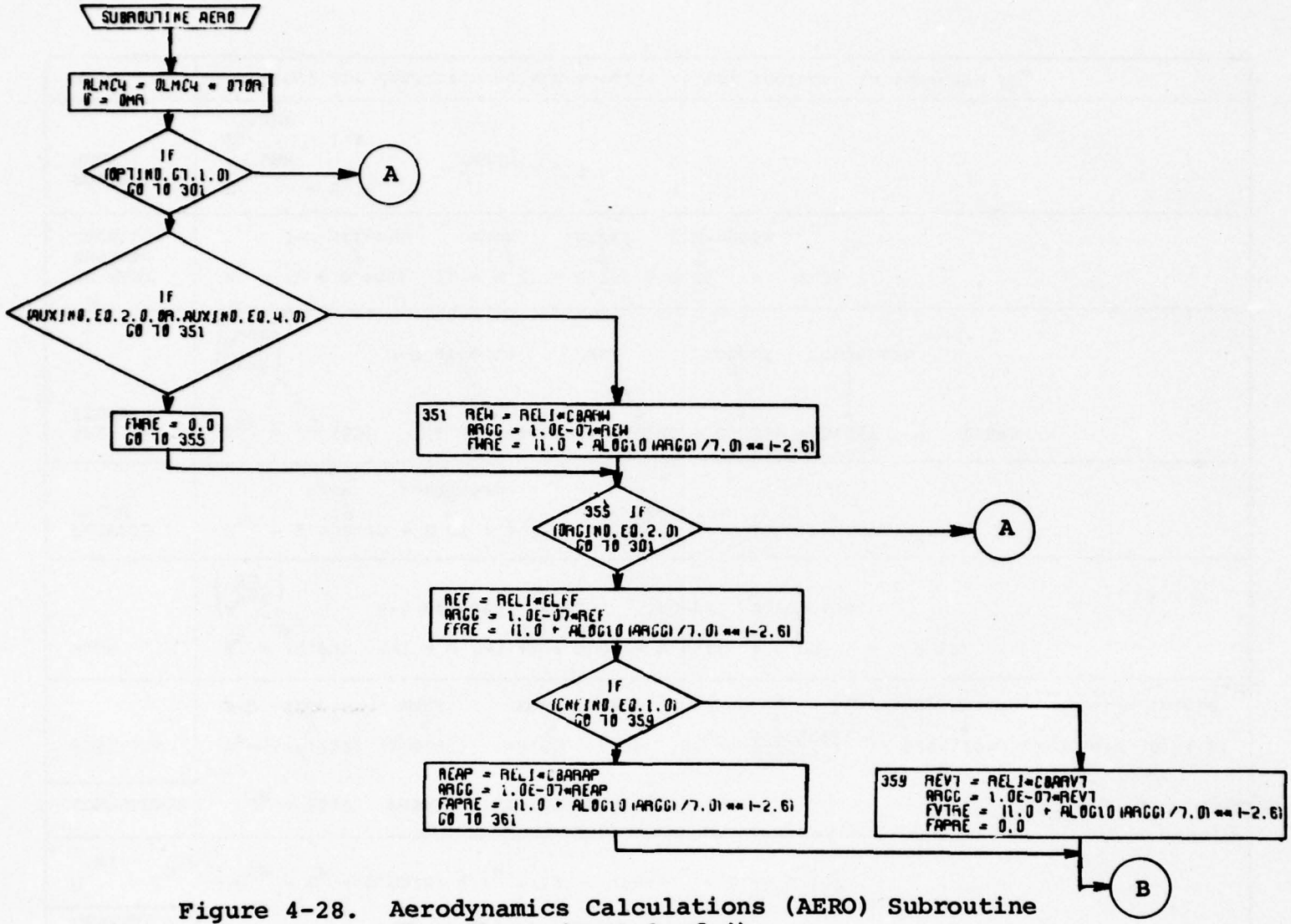

Figure 4-28. Aerodynamics Calculations (AERO) Subroutine Flow Chart (Part 1 of 4).

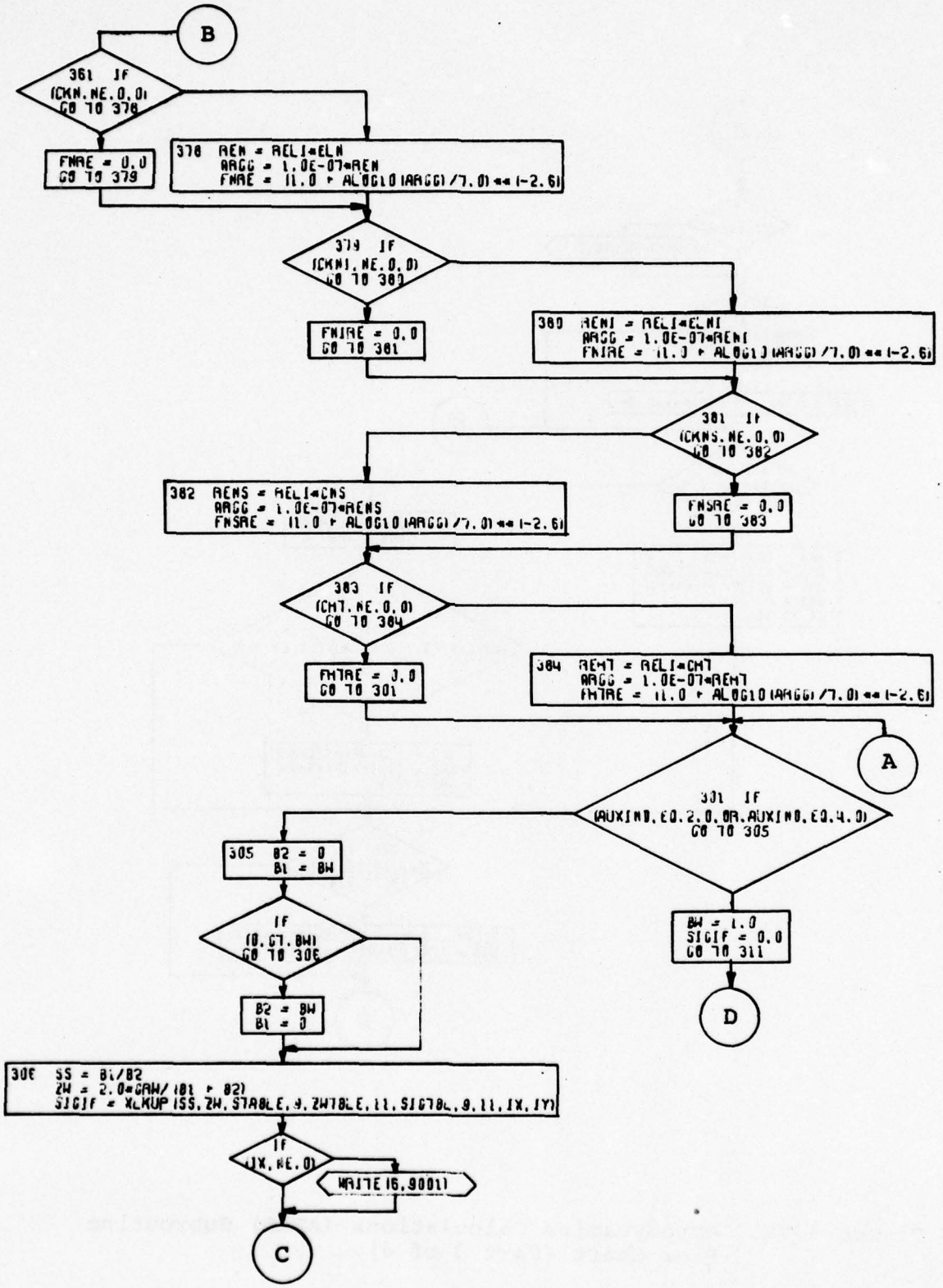

Figure 4-28. Aerodynamics Calculations (AERO) Subroutine Flow Chart (Part 2 of 4).

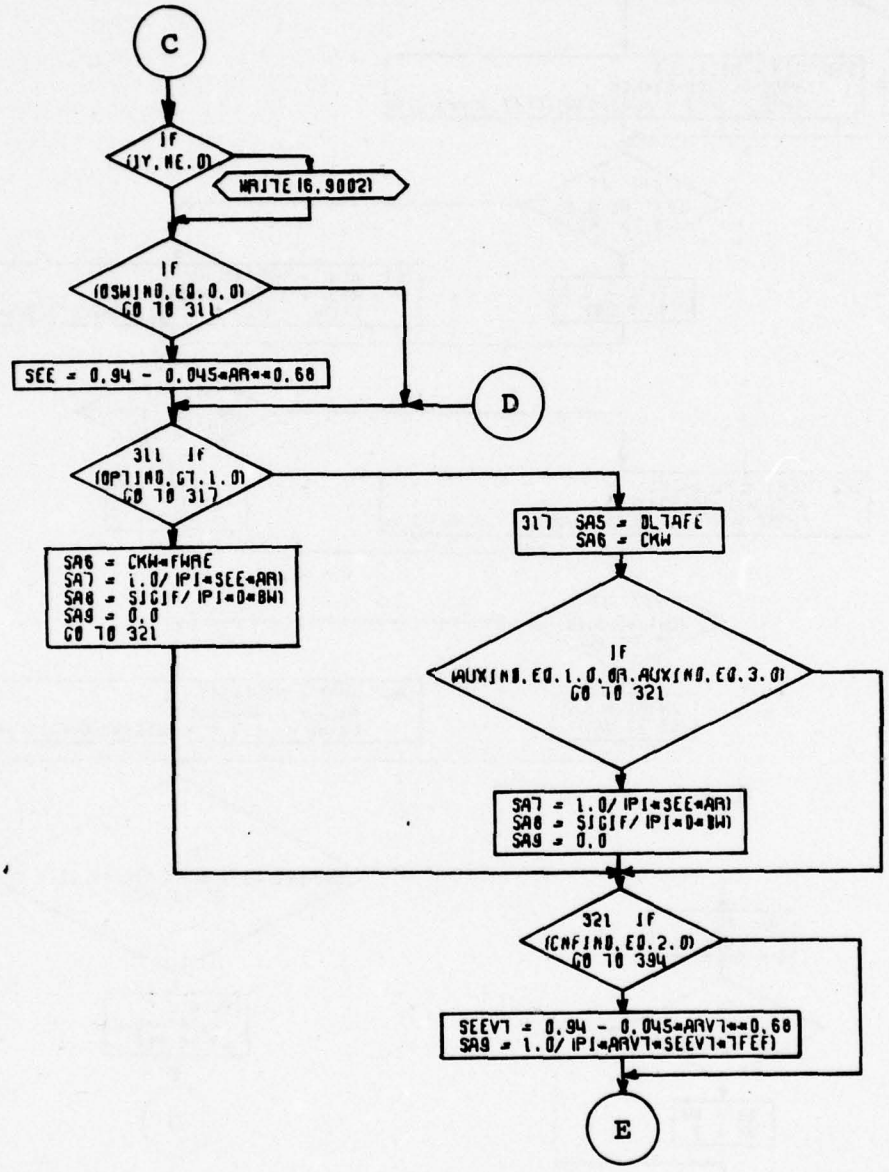

Figure 4-28. Aerodynamics Calculations (AERO) Subroutine Flow Chart (Part 3 of 4).

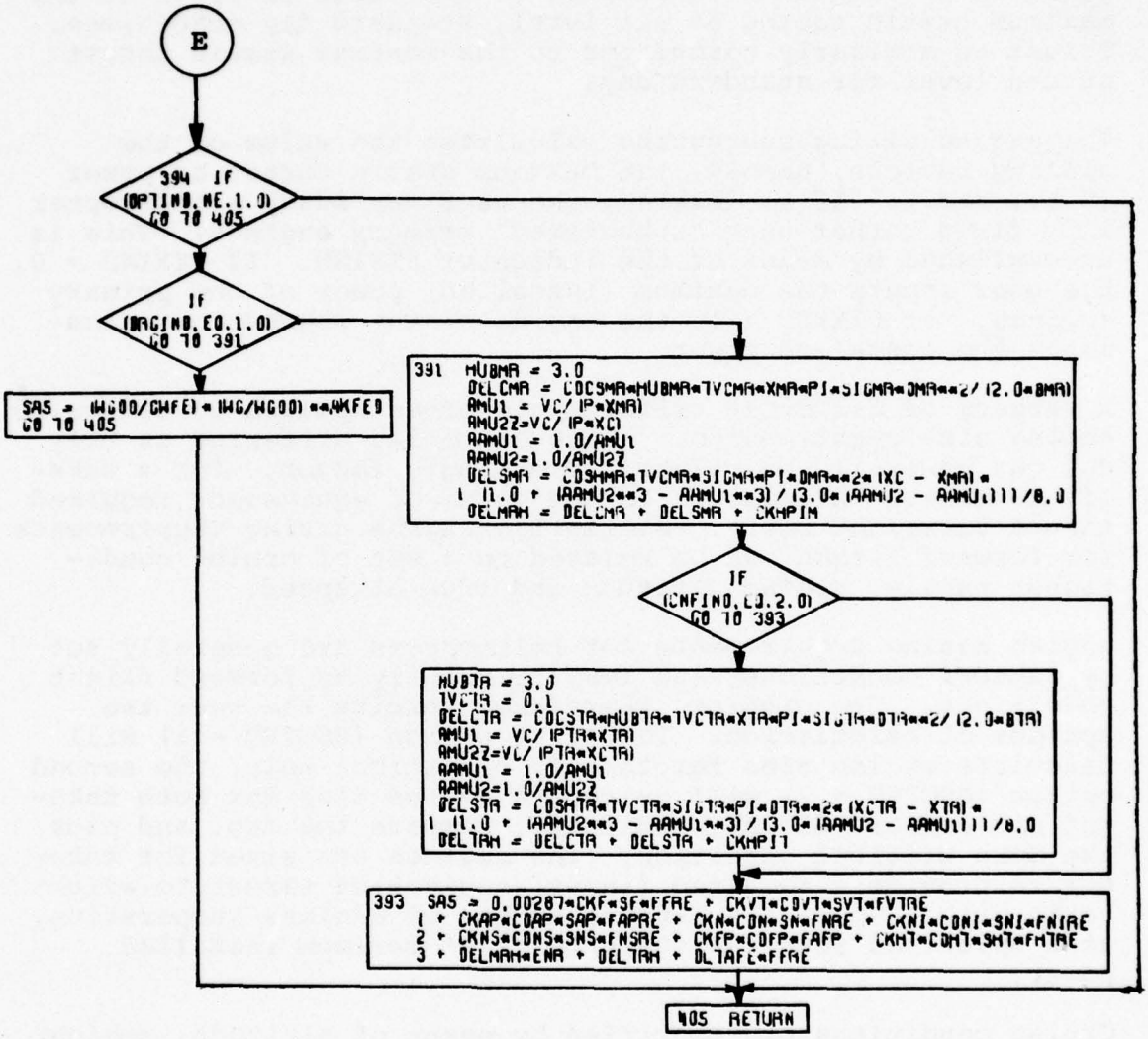

Figure 4-28. Aerodynamics Calculations (AERO) Subroutine Flow Chart (Part 4 of 4).

4.10 ENGINE SIZING SUBROUTINE

The engine cycle performance data included in the engine library consists of detailed performance maps of power (or thrust), fuel flow, N_I, and N_{II}. The data, as shown in Table 4-1, is in normalized, referred format. In particular, horsepower is normalized with respect to the value of power at the maximum static rating at sea level, standard day conditions. Thrust is similarly normalized to the maximum static thrust at sea level for standard day.

The engine sizing subroutine calculates the value of the scaling factors, namely, the maximum static thrust or power (S.L., std.). If so desired, the user may study a helicopter with fixed rather than "rubberized" primary engines. This is accomplished by means of the indicator FIXIND. If FIXIND = 0, the user inputs the maximum (installed) power of the primary engines. If FIXIND = 1, the engine sizing subroutine calculates the installed power.

A variety of different criteria are often applied to determine engine size requirements. These criteria, differing as they do, can generally be related by a single factor. For a takeoff condition this factor is the value of equivalent required thrust-to-weight ratio. Similarly, engine sizing requirements for forward flight can be related to a set of cruise conditions; namely, cruise altitude and true airspeed.

Engine sizing requirements for helicopters are generally set by takeoff conditions, and less frequently by forward flight conditions. The program, therefore, permits the user two options of calculation. The first option (ESCIND = 1) will calculate engine size for takeoff conditions only; the second option (ESCIND = 2) will calculate engine size for both takeoff and forward flight conditions, compare the two, and pick the more critical condition. The engines are sized for takeoff to provide a required (input) equivalent thrust-to-weight ratio with a specified (input) number of engines inoperative, at a specified fraction (SHP_E/SHP^*) of maximum installed power.

Cruise conditions are specified by means of altitude, ambient temperature, true airspeed; and, in the case of a compound helicopter, the propulsive thrust split $(T_{AUX}/T_{TOT})_C$ between the auxiliary propulsor and the main rotor. In addition, the user may select the power setting to be used: maximum, military, or normal.

In the case of a configuration having auxiliary independent cruise engines (APIND = 2), these engines may either be fixed or sized independently of the primary engines. For example, it would be possible to study a configuration with fixed size

primary engines (FIXIND = 0) while sizing the auxiliary engines to meet cruise requirements. NOTE: in a case like this, input locations 0234-0241 must be filled out to allow sizing for the auxiliary engines, even though the primary engines are fixed in size.

In addition to sizing the primary and auxiliary engines, this subroutine calculates the main rotor, tail rotor (in the case of a single rotor helicopter) and auxiliary propulsion drive system rating (in the case of a compound helicopter). The options available to the user for this purpose are:

XMSNIND = 0 Main, tail and auxiliary drive system ratings specified as fraction of primary engine installed power (in the case of a compound helicopter with auxiliary independent propulsion, the auxiliary independent drive system rating is specified as a fraction of the auxiliary independent engine installed power).

XMSNIND = 1 The drive system ratings calculated are equal to the product of the applicable multiplicative factors (SHPMRX/SHP*MR, SHPTRX/TRP*, SHPARX/SHP*AUX) and the component (main tail, and auxiliary) power obtained from the proportional split (based on power required) of the total sea level standard maximum (installed) engine power.

XMSNIND = 2 Main, tail, and auxiliary drive system ratings specified at fraction of power required to hover or cruise at design conditions (more critical of the two conditions is selected).

XMSNIND = 3 Same as 2, except the most critical of the two design conditions is compared to the drive system rating required at an alternate payload/gross weight hover at the design point conditions. The most critical of these three conditions is selected.

XMSNIND = 4 Same as 2, except that tail rotor drive system rating is selected independently of the main rotor drive system to match a specified fraction of power required to hover or cruise at design conditions (more critical of the two conditions is selected).

XMSNIND = 5 Same as 3, except that the tail rotor drive system rating is selected independently of the main rotor drive system as in 4, and the most critical of the two design conditions is

compared to the tail rotor drive system rating required at an alternate payload/gross weight hover at the design point conditions. The most critical of these three conditions is selected.

It should be noted that when FIXIND = 0 or FIXINDI = 0; i.e., fixed size engines, any of the six transmission sizing options (XMSNIND = 0 → 5) may be used. If drive system ratings calculated based on meeting specified flight conditions (XMSNIND = 2 → 5) exceed the installed power rating of the fixed size engines, the drive system ratings are reset to "match" the fixed size engines.

The use of separate engine and transmission sizing options provides great flexibility in meeting conflicting engine/drive system requirements. For example, using XMSNIND = 2, it is possible to size a helicopter's primary engines to meet an engine inoperative in hover requirement, while only rating the drive system for the actual power required to hover at that design point, thus effecting a considerable saving in drive system weight. Or, using XMSNIND = 3, it is possible to rate the drive system for the power required at an alternate gross weight/payload hover point, while still meeting the original engine out sizing criteria. Note that XMSNIND = 4, 5 are of use only when sizing single rotor helicopters (CNFIND = 1.0).

The drive system ratings determined in the sizing process may be used to limit helicopter performance by setting QIND (LOC 1205) and Q_{MAX}/Q^* (LOC 1224) = 1.0 for the primary drive system and QINDI (LOC 2205) and Q_{MAX}/Q^* (LOC 2224) = 1.0 for the auxiliary drive system. Figure 4-29 contains a flow chart of this subroutine.

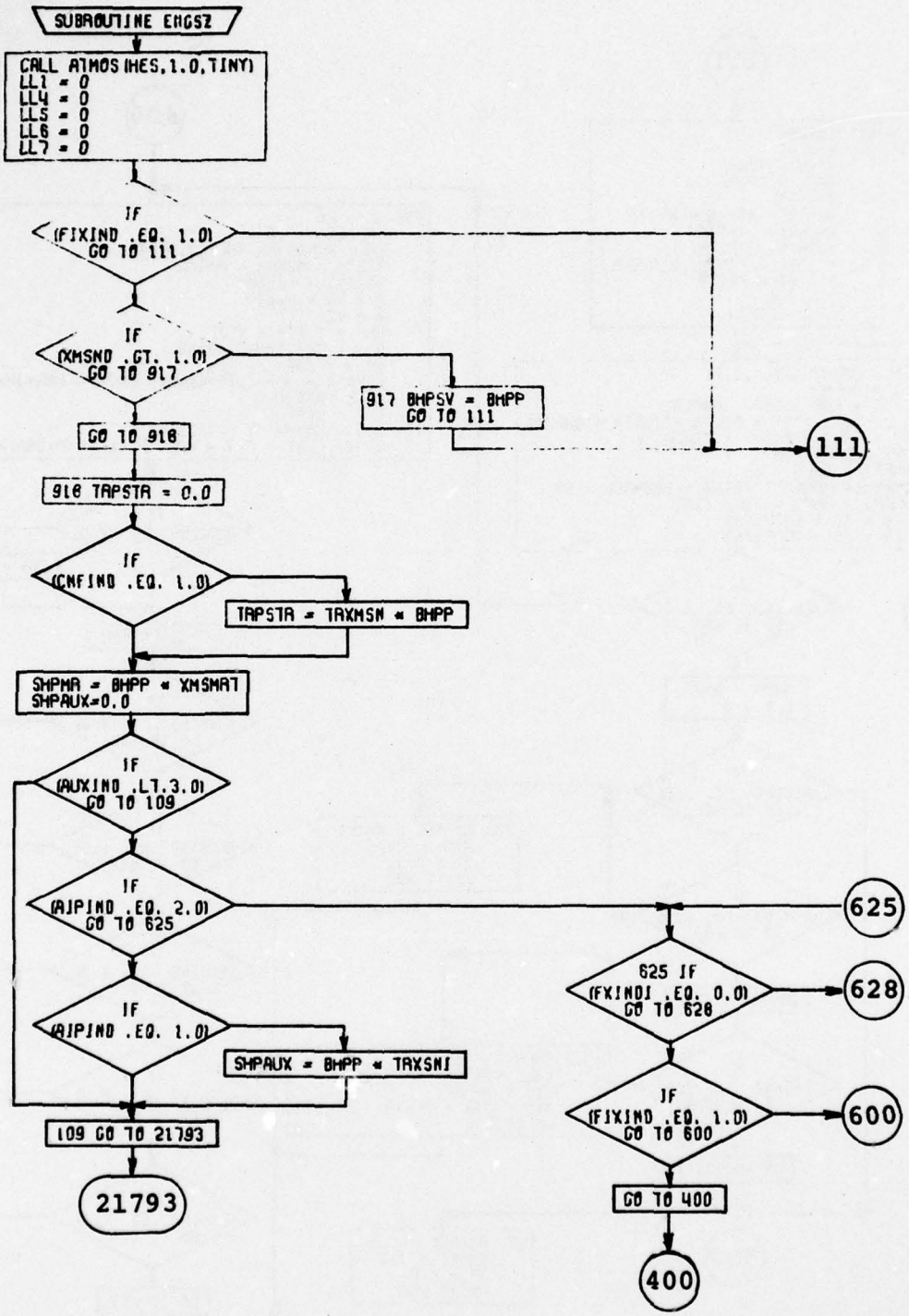

Figure 4-29. Engine Sizing Subroutine Flow Chart (Part 1 of 12).

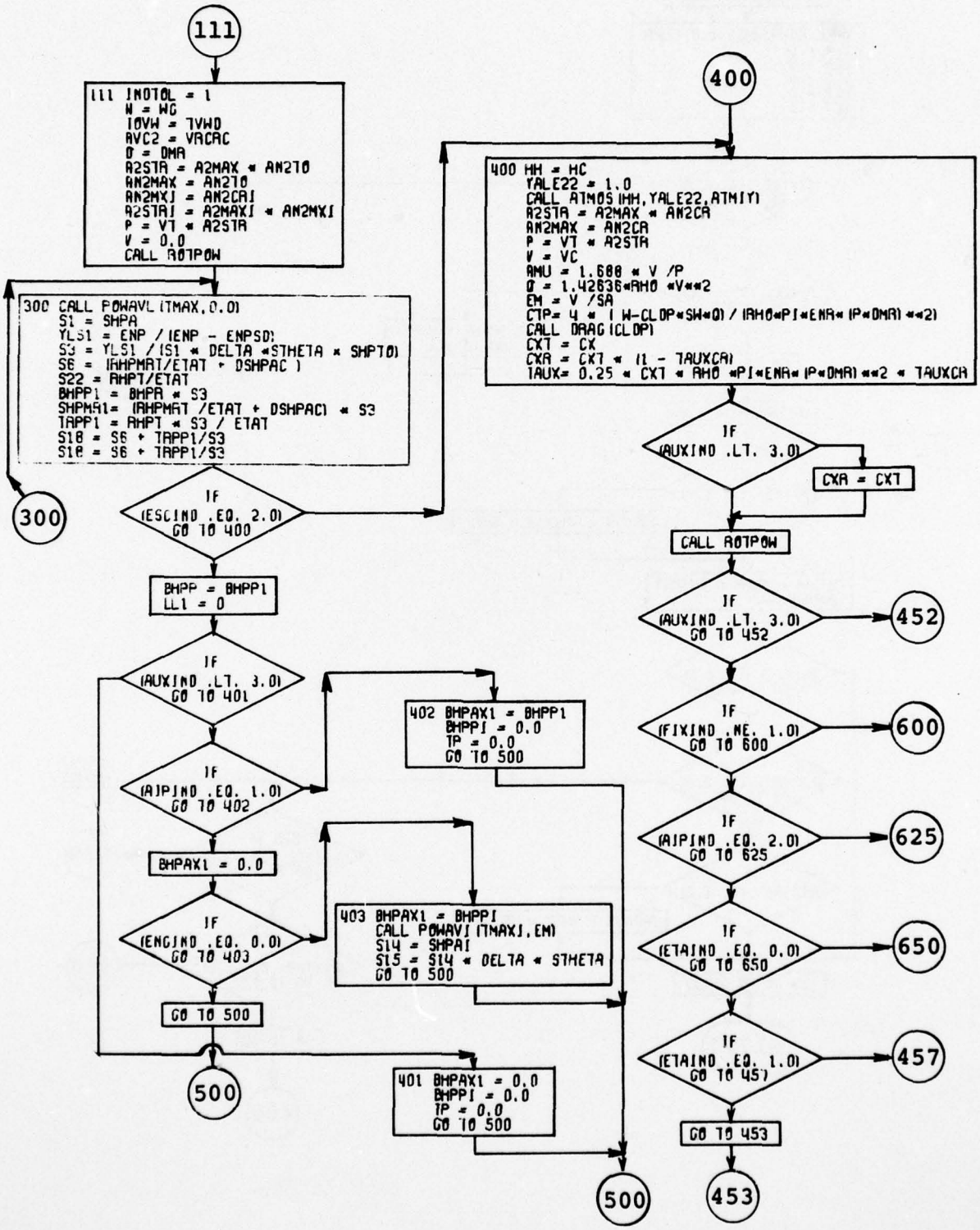

Figure 4-29. Engine Sizing Subroutine Flow Chart (Part 2 of 12).

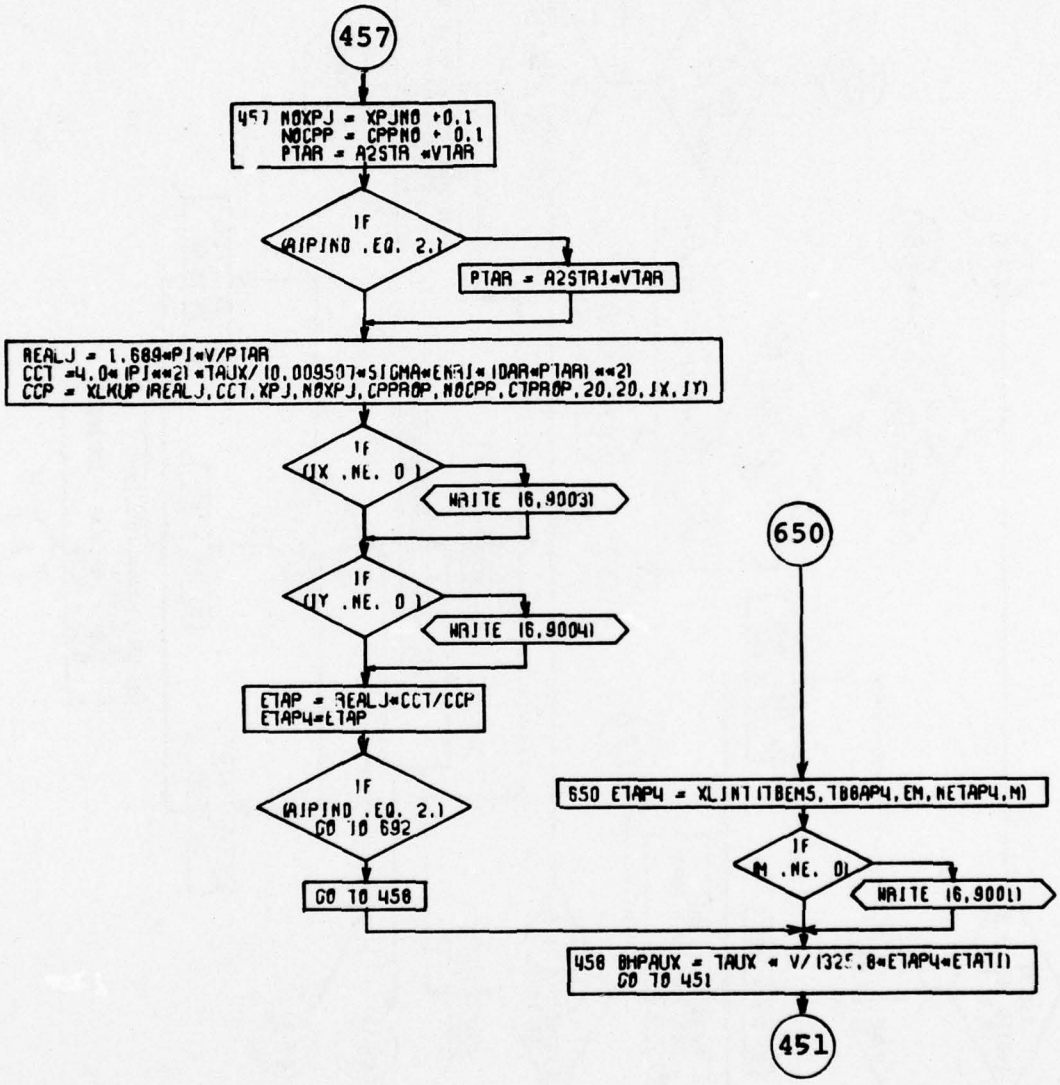

Figure 4-29. Engine Sizing Subroutine Flow Chart (Part 3 of 12).

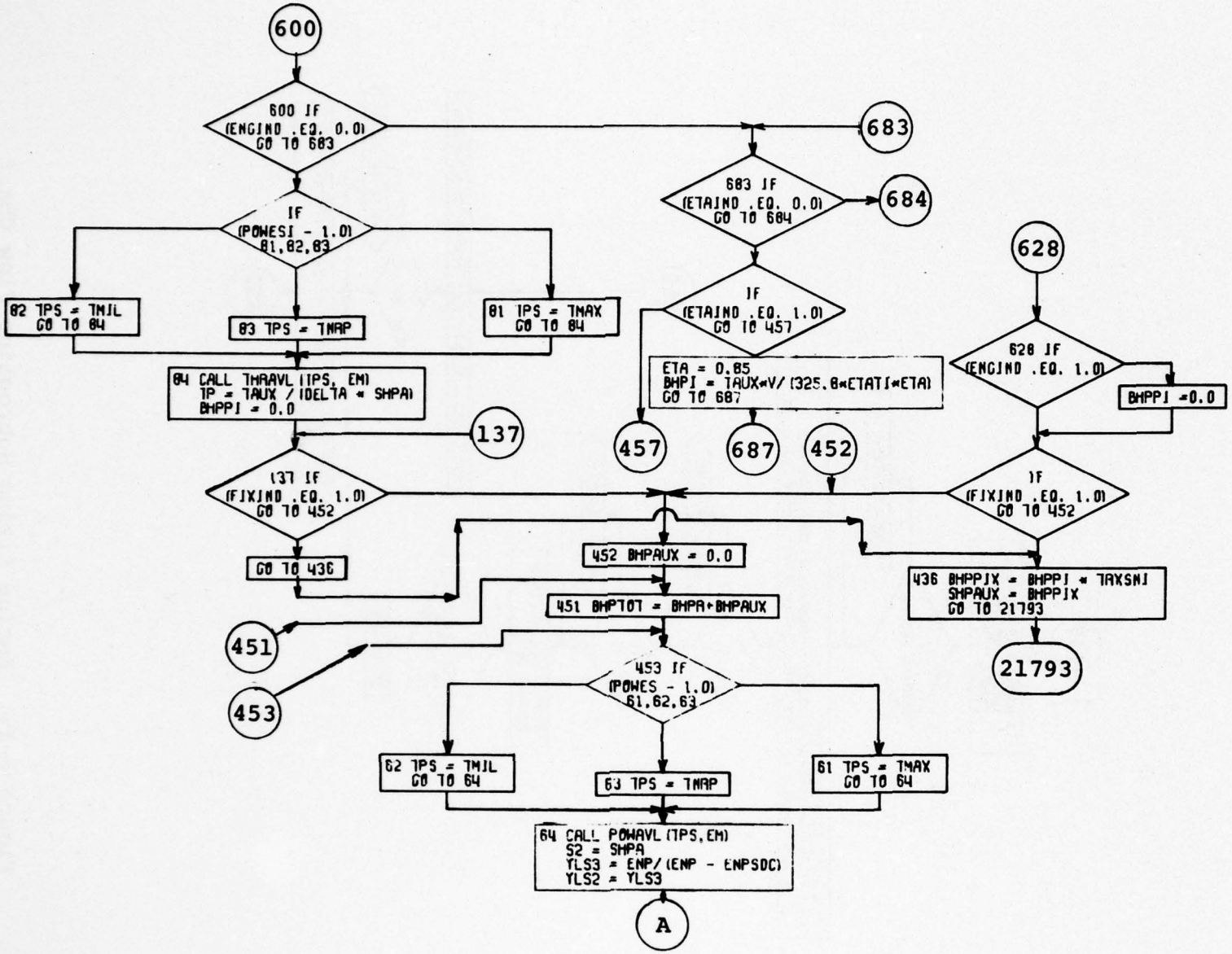

Figure 4-29. Engine Sizing Subroutine Flow Chart (Part 4 of 12).

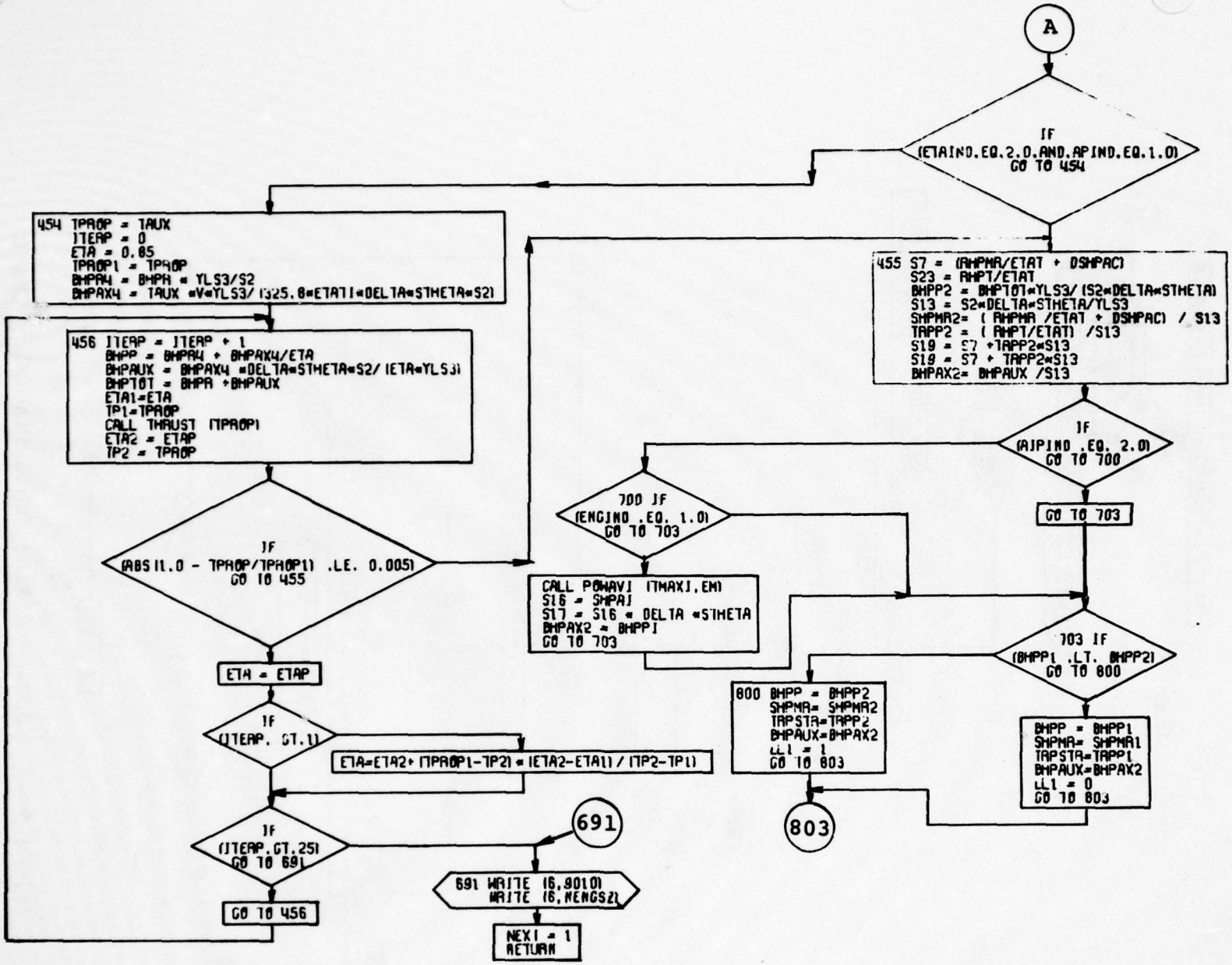

Figure 4-29. Engine Sizing Subroutine Flow Chart (Part 5 of 12).

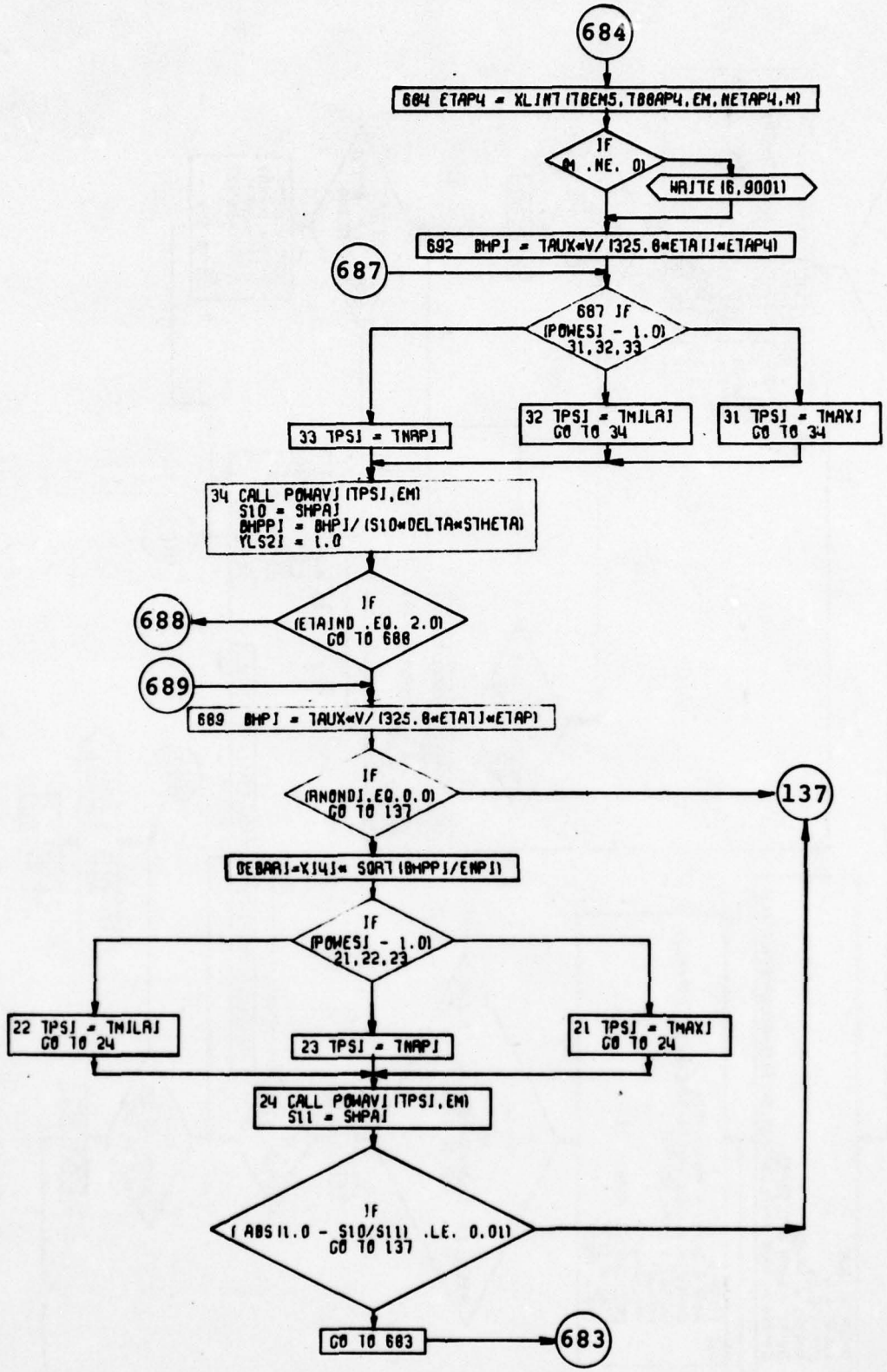

Figure 4-29. Engine Sizing Subroutine Flow Chart (Part 6 of 12).

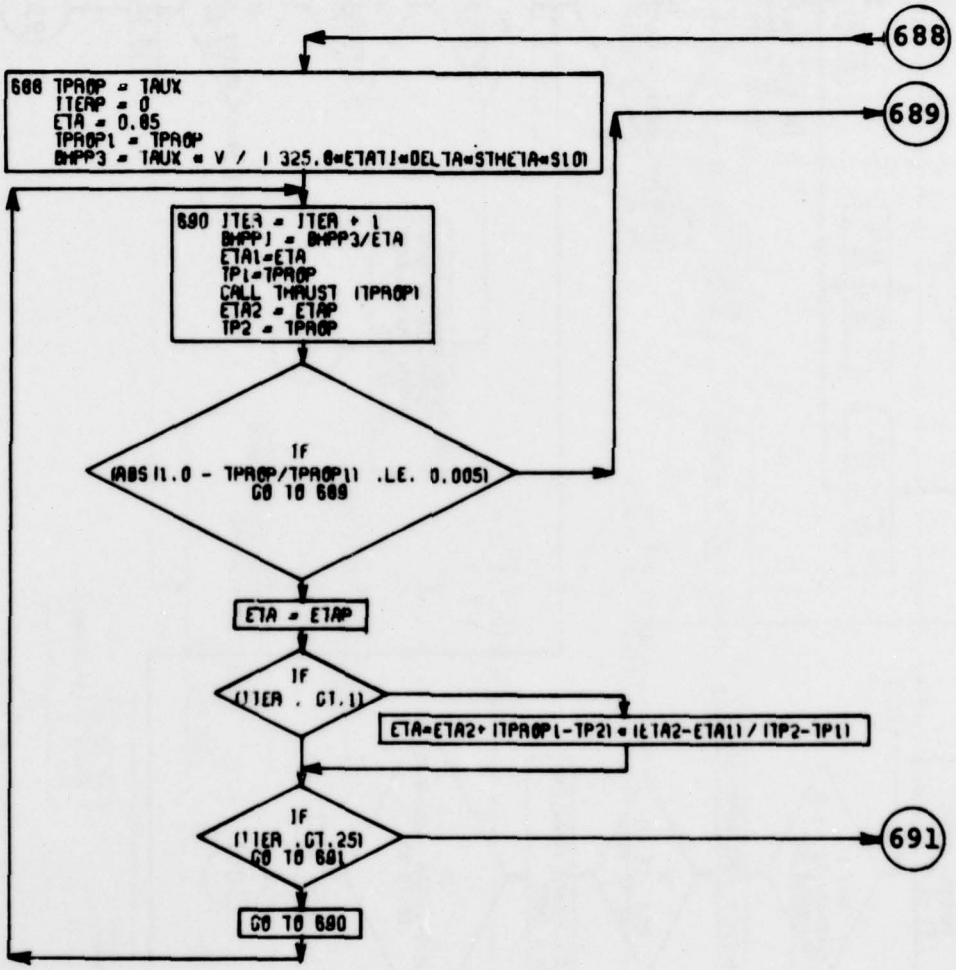

Figure 4-29. Engine Sizing Subroutine Flow Chart (Part 7 of 12).

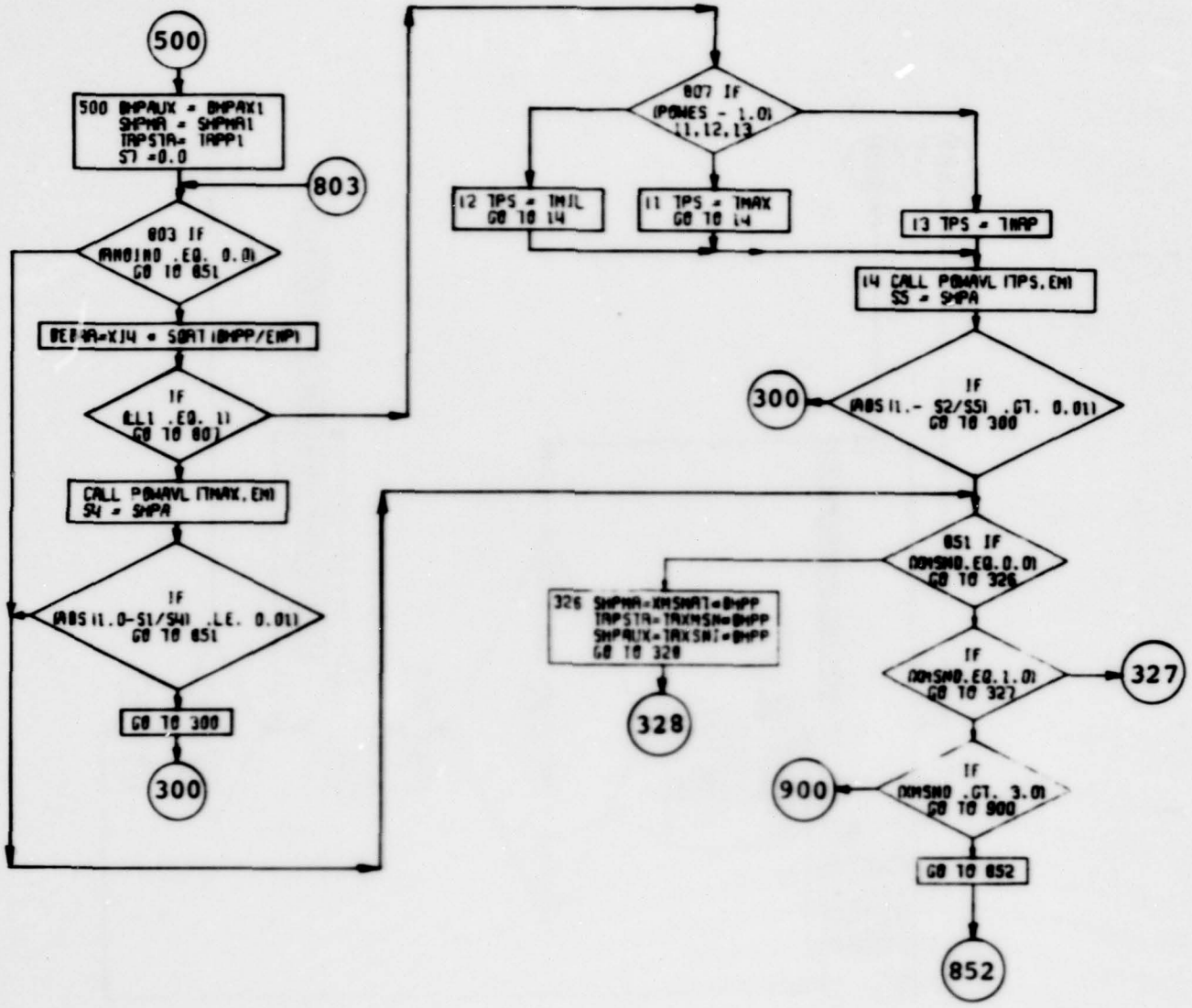

Figure 4-29. Engine Sizing Subroutine Flow Chart (Part 8 of 12).

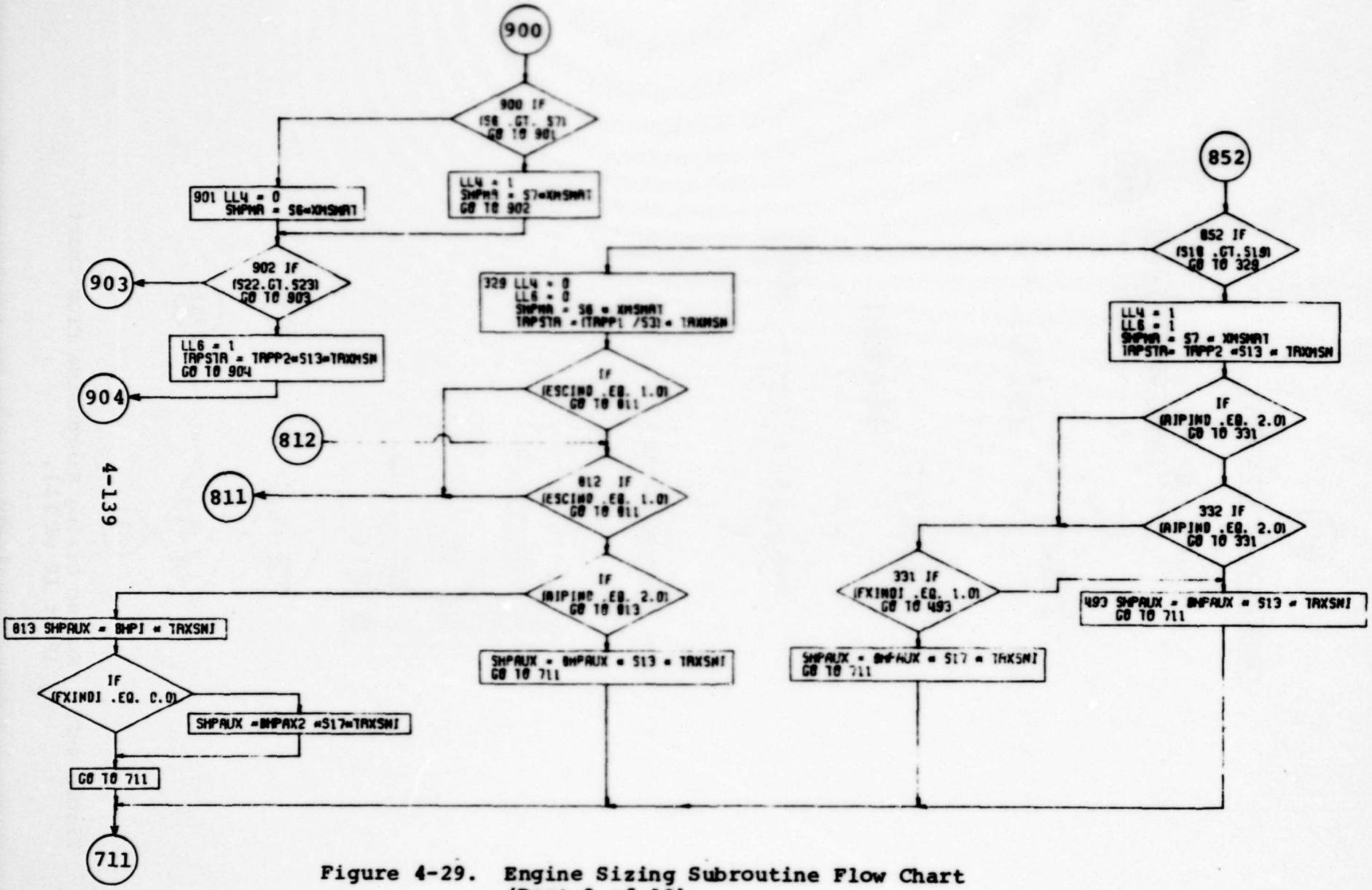

Figure 4-29. Engine Sizing Subroutine Flow Chart (Part 9 of 12).

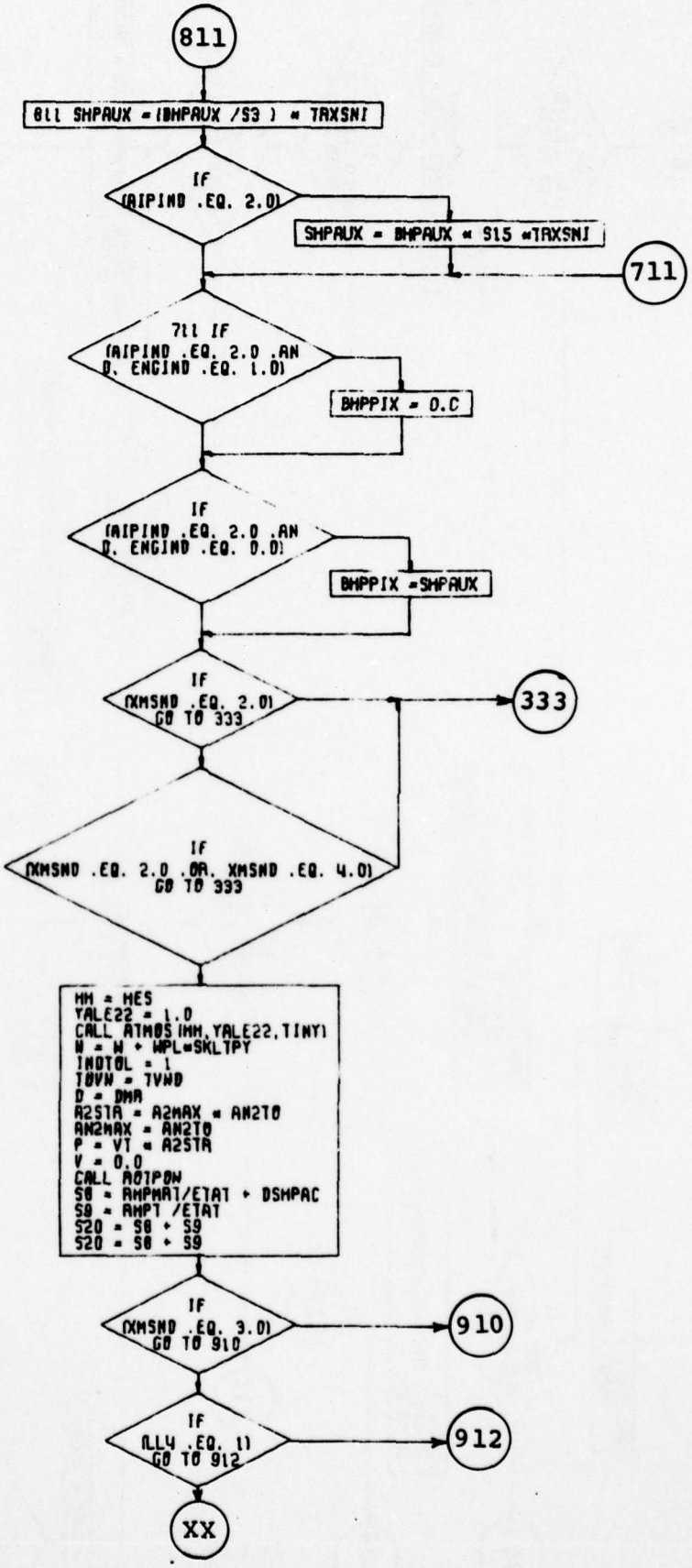

Figure 4-29. Engine Sizing Subroutine Flow Chart (Part 10 of 12).

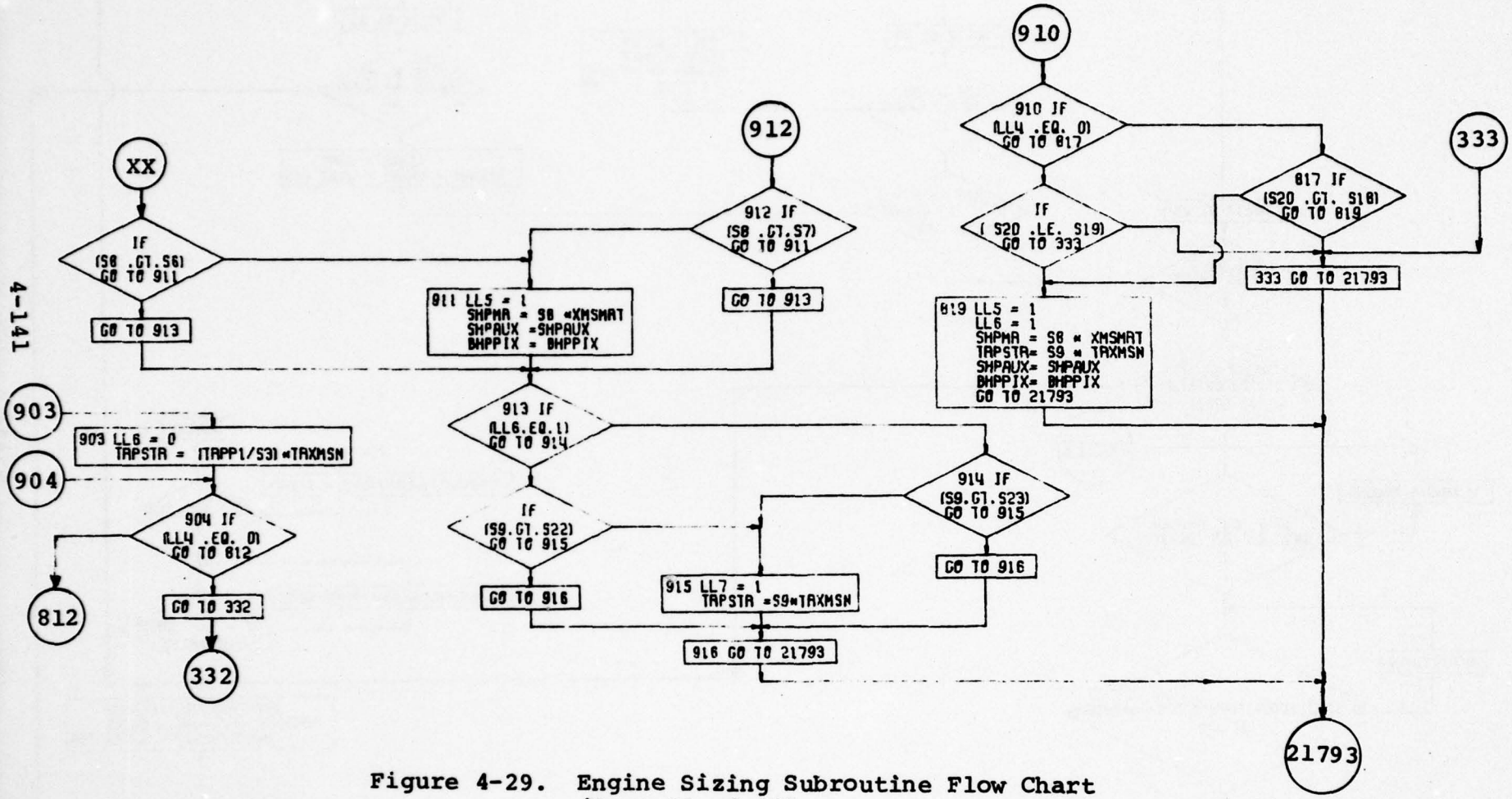

Figure 4-29. Engine Sizing Subroutine Flow Chart (Part 11 of 12).

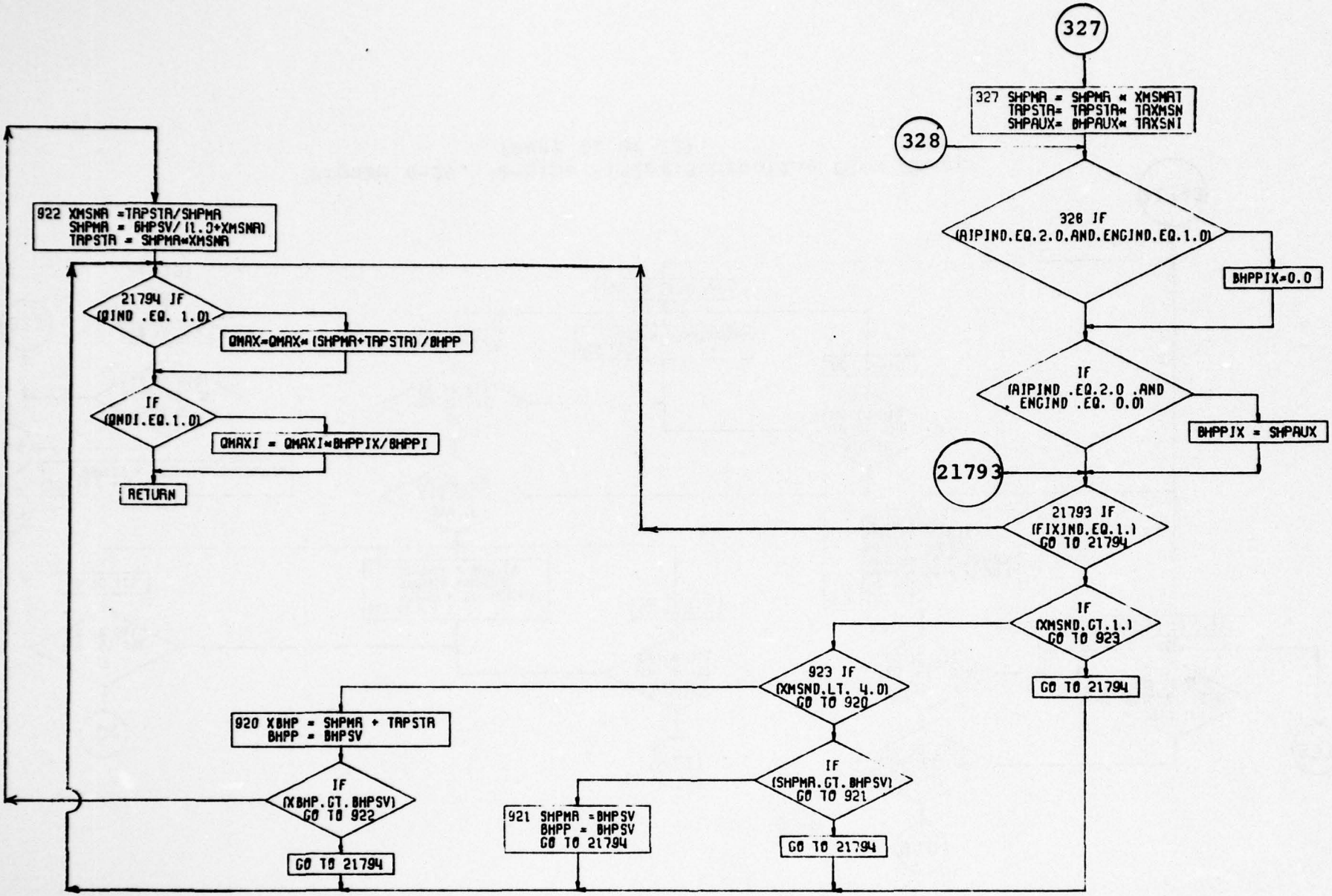

Figure 4-29. Engine Sizing Subroutine Flow Chart (Part 12 of 12).

4.11 WEIGHT TRENDS SUBROUTINE

The weight trends subroutine calculates the group weights for the propulsion system, the structures system, and the flight control system. These weights are then combined with input values of the weight of fixed useful load, fixed equipment, and payload in order to determine the weight of fuel available (Figure 4-30). The subroutine uses detailed statistical weight equations as used at the Boeing Vertol Company. The group weights are not directly added, but rather are combined by the use of incremental multiplicative and additive weight factors; these factors are useful for sensitivity studies for the aircraft. For example, if it is desired to determine the effect of an additional 300 pounds of propulsion system weight, the factor W_p is input as 300. Similarly, if it is desired to investigate the effect of a 15-percent increase in the weight of the engines, the factor K_{18} is input as 1.15.

In order to calculate the weight of the aircraft structure, the weight trends subroutine must determine the limiting design load factor. For pure and auxiliary propulsion helicopters (without wings), the program uses the input value of maneuver load factor. In the case of a wing or compound helicopter, it does this by comparing the magnitude of the input maneuver load factor with the value calculated for gust load factor. The gust load factor is evaluated at the altitude at which maximum operating equivalent airspeed (V_{MO}) is equal to the speed for maximum operating Mach number (M_{MO}) so long as the altitude falls in the band,

$$0 \leq h_{CRIT} \leq 20{,}000 \text{ ft}$$

The gust load factor is calculated at the speed V_c (see Reference 11) which is taken to be equal to V_{MO}/M_{MO}. If the user finds that his aircraft is gust-critical at other than the V condition, he must manually calculate the expected load factor and insert that value in the program as a dummy maneuver load factor.

4.11.1 Weight Trend Data

The weights subroutine section of HESCOMP represents one approach for determining the individual and group weights which make up the weight empty of an aircraft. The aircraft weight is divided into subgroups, as shown in Table 4-10, and is in general accordance with the weight and balance data reporting procedures and forms for Aircraft and Rotorcraft described in Military Standard 1374. A copy of Part I (Group Weight Statement) is included at the end of this section. A flow chart describing the weights subroutine is shown in Figure 4-31.

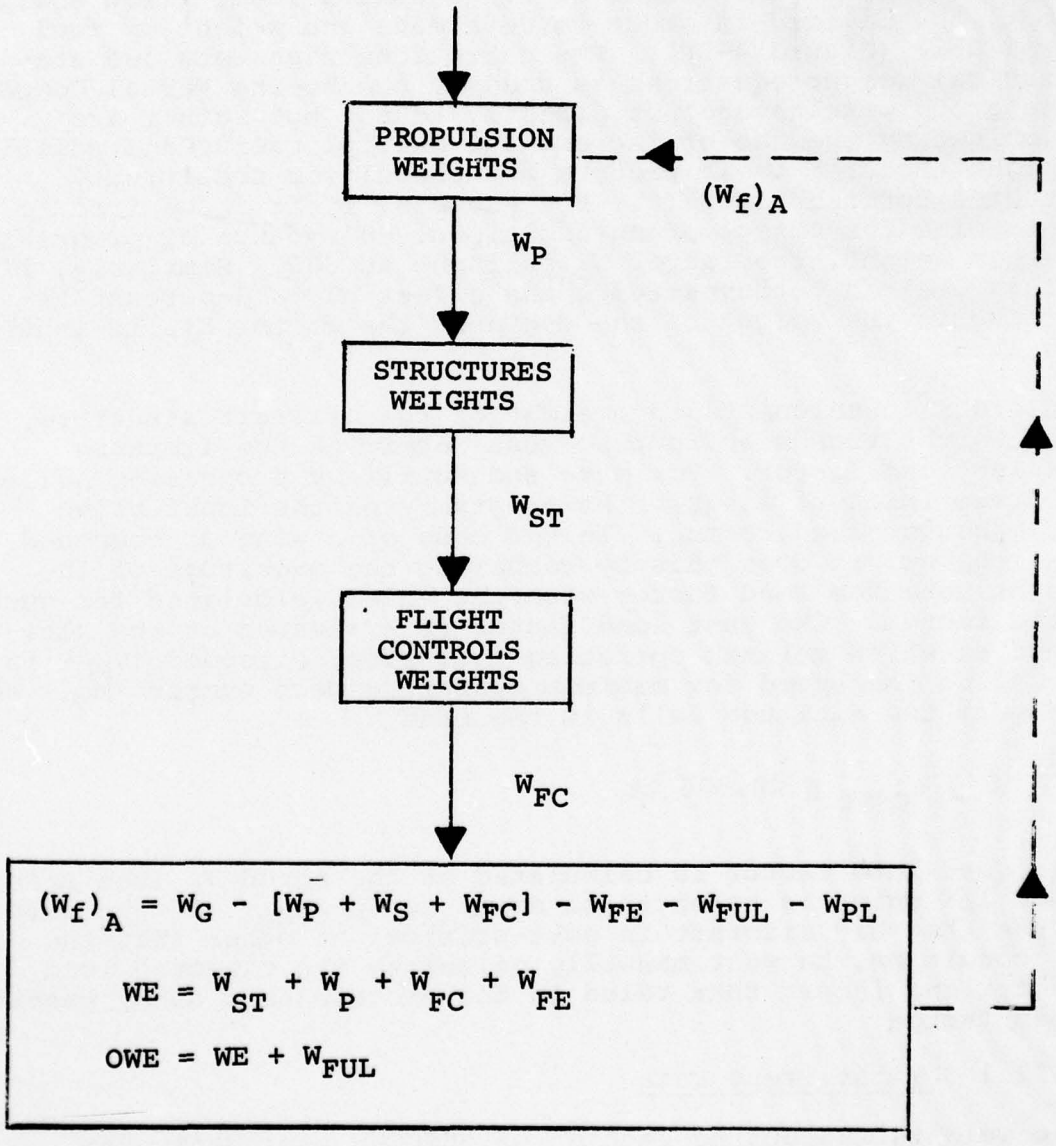

Figure 4-30. Weight Trends Subroutine.

AD-A046 367 BOEING VERTOL CO PHILADELPHIA PA F/G 1/3
HESCOMP. THE HELICOPTER SIZING AND PERFORMANCE COMPUTER PROGRAM--ETC(U)
NOV 74 S J DAVIS, J S WISNIEWSKI N62269-74-C-0757
UNCLASSIFIED, D210-10699-2 NL

3 OF 6
AD A046367



BOEING VERTOL COMPANY

WEIGHT SUMMARY - PRELIMINARY DESIGN
(MIL-STD-1374)

TABLE 4-10. WEIGHT SUMMARY FORM

WING	1		
ROTOR	2		
TAIL	3		
SURFACES	4		
ROTOR	5		
BODY	6		
BASIC	7		
SECONDARY	8		
ALIGHTING GEAR GROUP	9		
ENGINE SECTION	10		
	11		
PROPULSION GROUP	12		
ENGINE INST'L	13		
EXHAUST SYSTEM	14		
COOLING	15		
CONTROLS	16		
STARTING	17		
PROPELLER INST'L	18		
LUBRICATING	19		
FUEL	20		
DRIVE	21		
FLIGHT CONTROLS	22		
	23		
AUX. POWER PLANT	24		
INSTRUMENTS	25		
HYDR. & PNEUMATIC	26		
ELECTRICAL GROUP	27		
AVIONICS GROUP	28		
ARMAMENT GROUP	29		
FURN. & EQUIP. GROUP	30		
ACCOM. FOR PERSON.	31		
MISC. EQUIPMENT	32		
FURNISHINGS	33		
EMERG. EQUIPMENT	34		
AIR CONDITIONING	35		
ANTI-ICING GROUP	36		
LOAD AND HANDLING GP.	37		
	38		
	39		
	40		
	41		
WEIGHT EMPTY			
CREW			
TRAPPED LIQUIDS			
ENGINE OIL			
FUEL			
GROSS WEIGHT			

REV.

FORM 26391 (2/73)

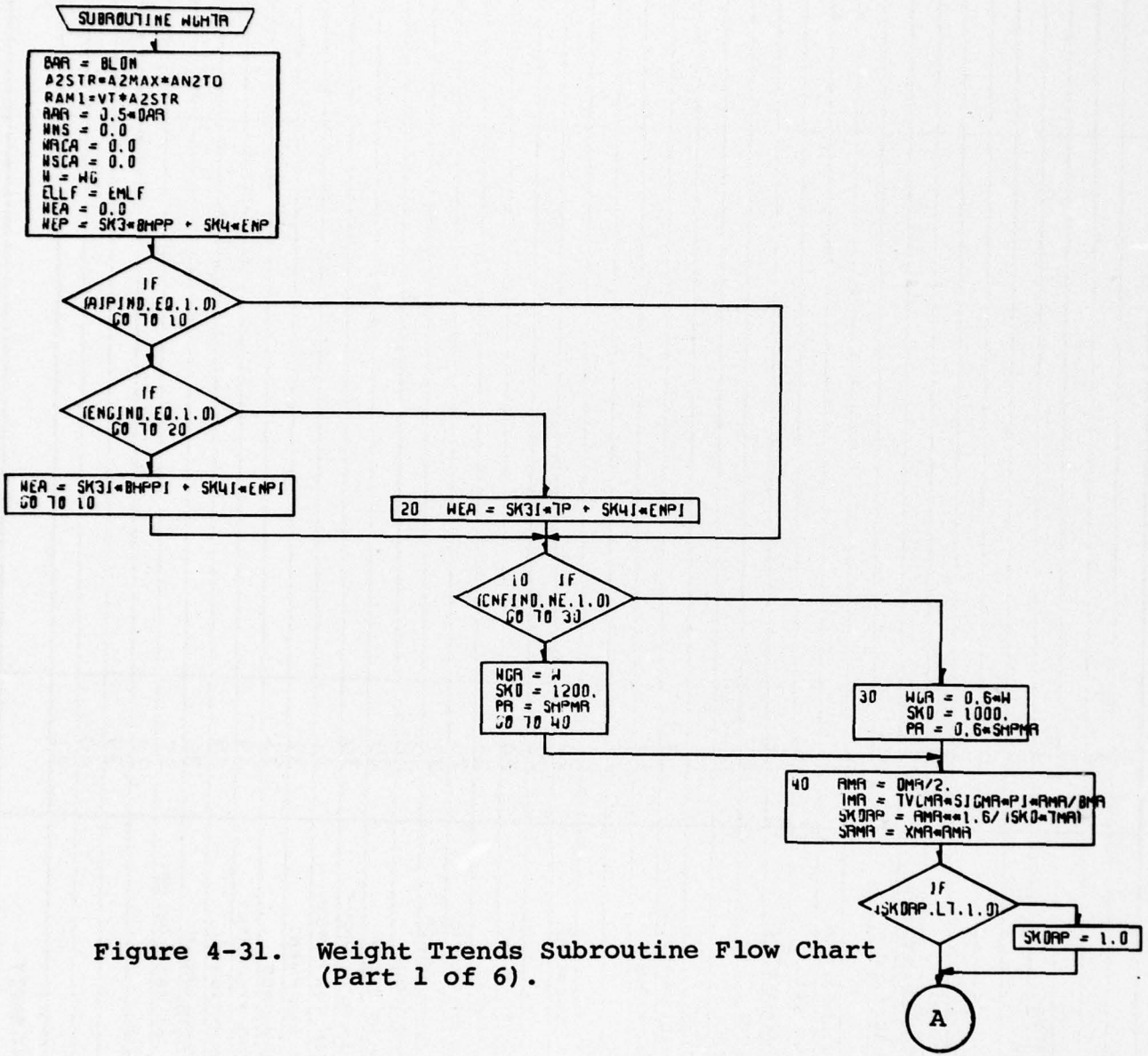

Figure 4-31. Weight Trends Subroutine Flow Chart (Part 1 of 6).

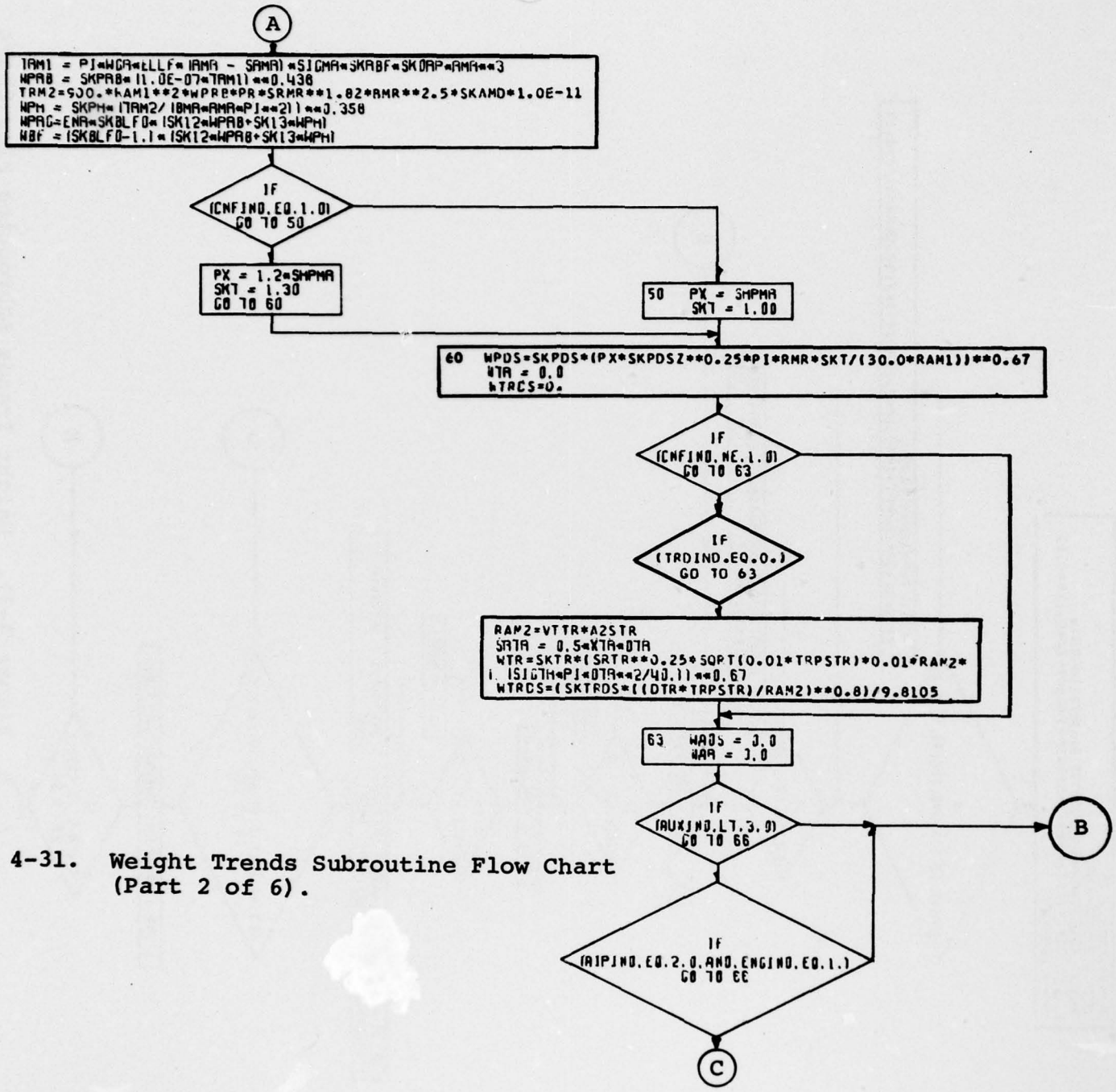

Figure 4-31. Weight Trends Subroutine Flow Chart (Part 2 of 6).

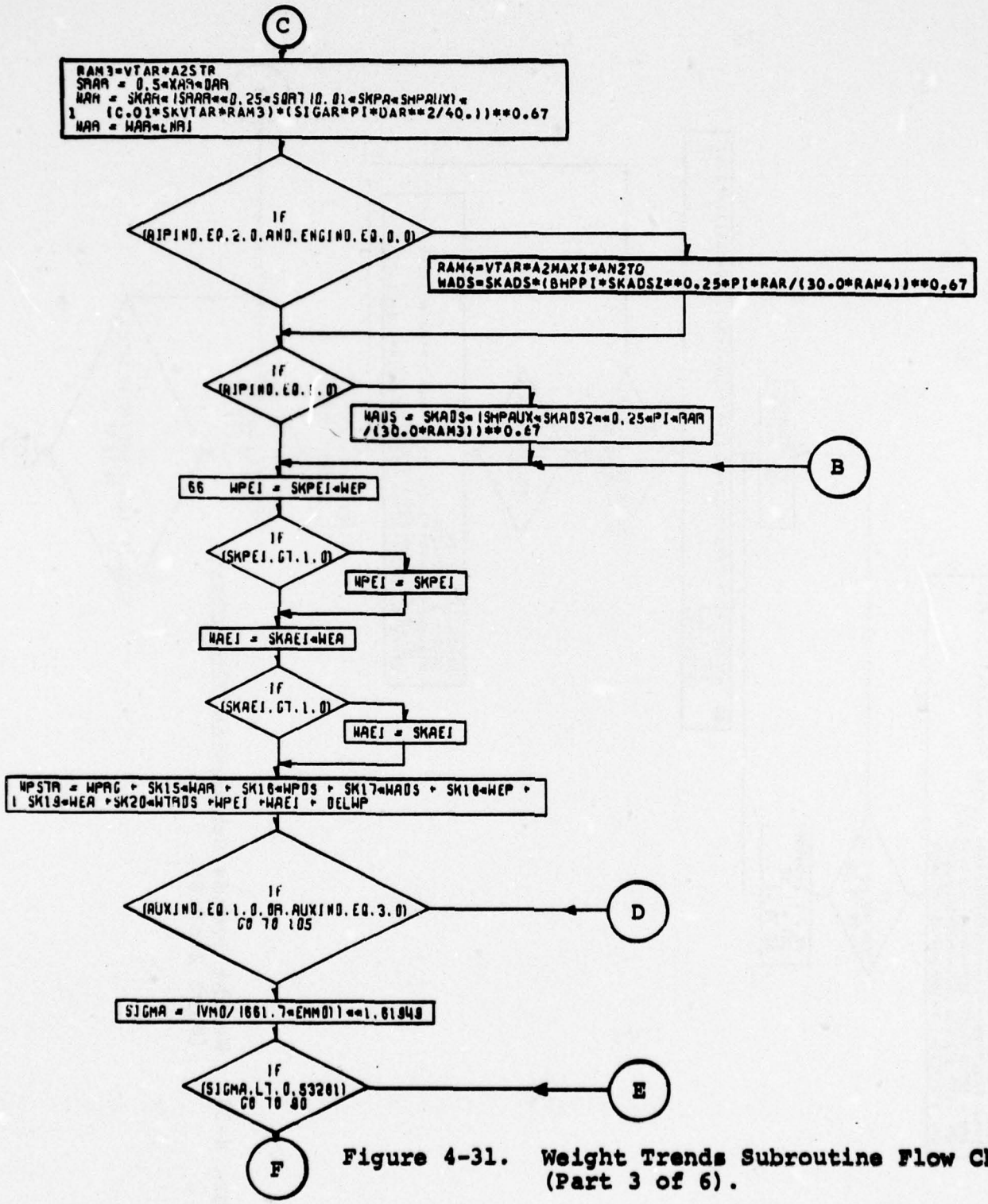

Figure 4-31. Weight Trends Subroutine Flow Chart (Part 3 of 6).

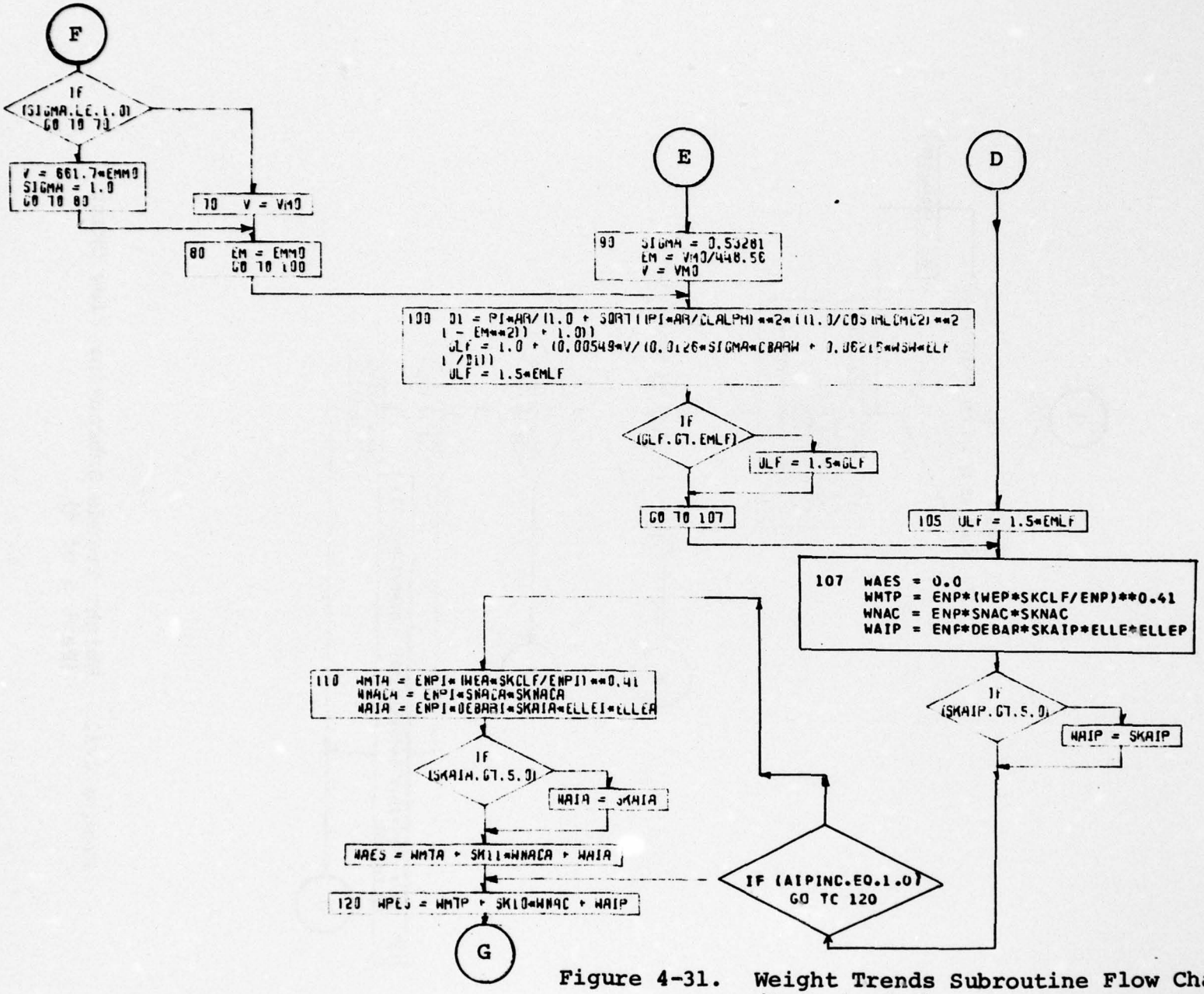

Figure 4-31. Weight Trends Subroutine Flow Chart (Part 4 of 6).

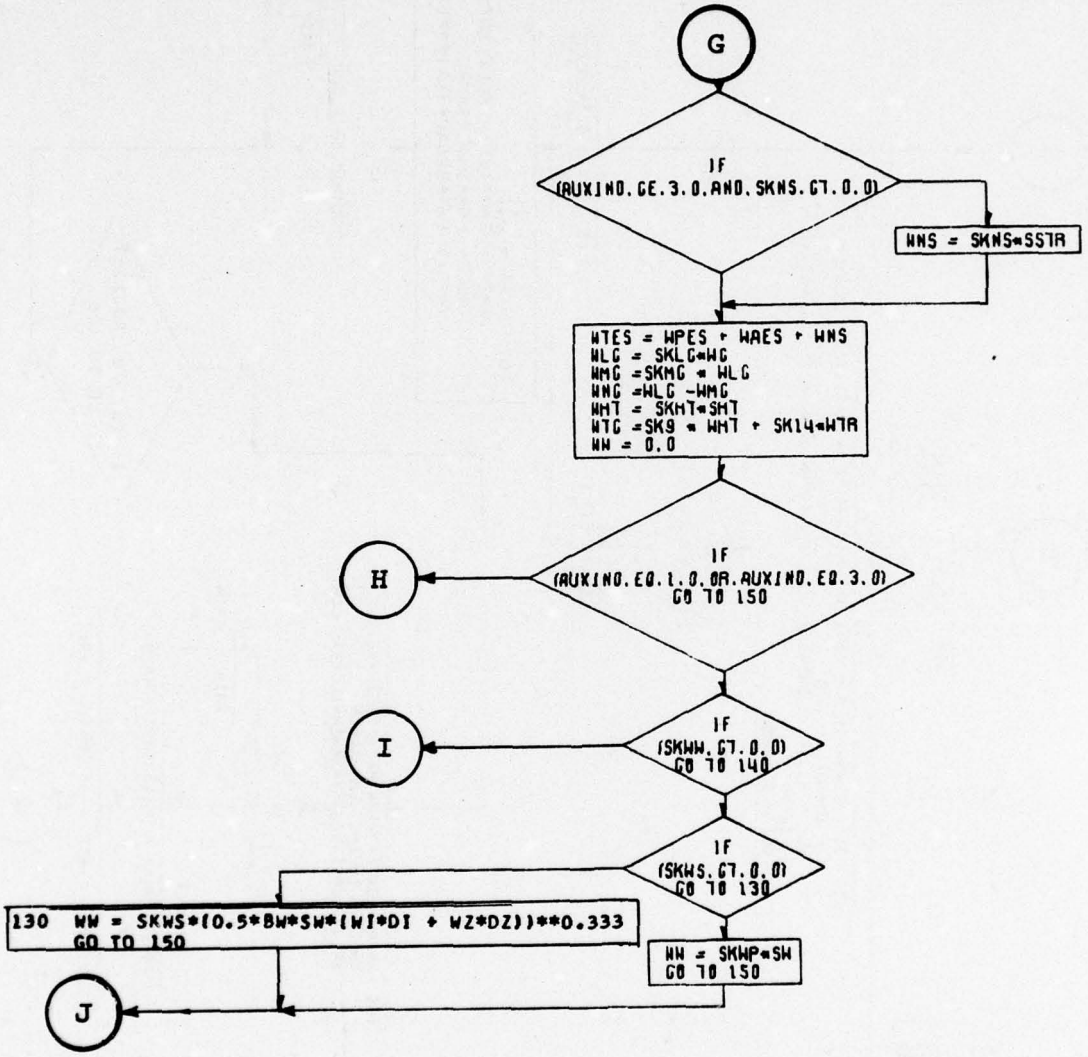

Figure 4-31. Weight Trends Subroutine Flow Chart (Part 5 of 6).

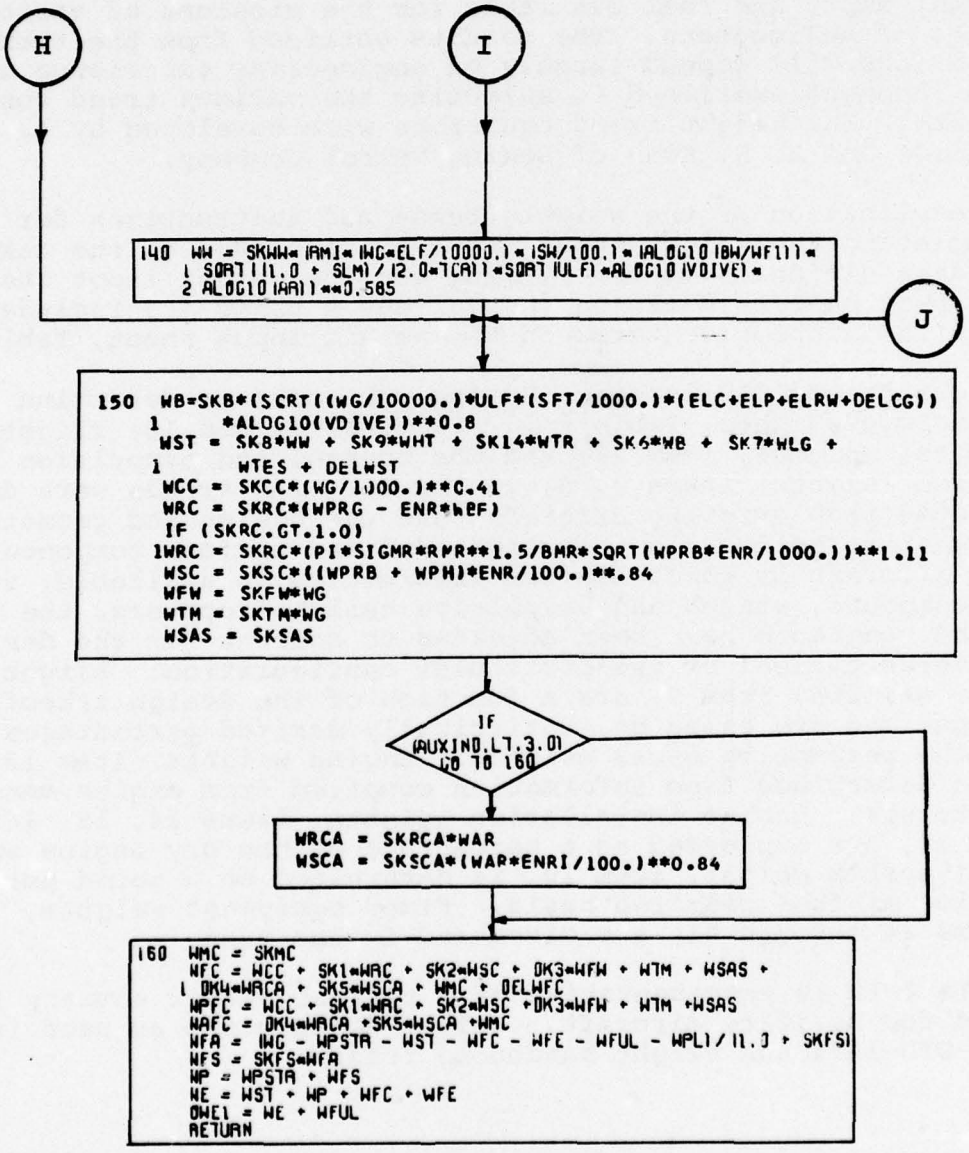

Figure 4-31. Weight Trends Subroutine Flow Chart (Part 6 of 6).

The trend equations shown on the weights subroutine flow chart and those presented in the text produce the same results, although they are not necessarily written in the same form. The flow chart equations express the text trends in the term used in other parts of the computer program.

The primary purpose of this weights subroutine is to provide a consistent method for rapidly estimating the operational weight empty and fuel available for the missions of various types of helicopters. The results obtained from the trend equations will depend largely on engineering experience and the judgment exercised in selecting the various trend constants. The weight trend equations were developed by A. H. Schmidt and R. H. Swan of Boeing Vertol Company.

An explanation of the weight trends and instructions for completing the weight input sheet are included in the text As an additional aid for filling out the weight input sheet, the page numbers defining the various k terms are included with the respective terms on the weight input sheet, Table 4-11.

Weight trends developed at Boeing were used to determine the structure weights, Table 4-10, items 1, 6, and 10; flight control weights, item 22; and the control and propulsion system weights, items 2, 5, 18 and 21. The trends were developed from existing aircraft, and use design and geometric parameters to compute the weights of the various components. For aircraft on which limited information is available, such as compound, winged and propulsive tail helicopters, the trend constants have been adjusted to account for the design features typical of the particular configuration. Alighting gear weights, item 9, are a function of the design takeoff weight and are based on statistically derived percentages of the respective gross weights. Engine weights, item 13, were determined from information compiled from engine manufacturers. Engine installation weights, items 14, 15, 16, 17 and 19, are expressed as a percentage of the dry engine weight. Fuel system weight, item 20, is determined on a pound per gallon of fuel required basis. Fixed equipment weights, items 24 through 41, are discussed in the text.

Table 4-10 is representative of a typical weight summary form used for military aircraft. Weight definitions as used in MIL-STD-1374 and weight handbooks follow.

6.2.3 Weight Definitions - As used in MIL-STD-1374 and Weight Handbooks.

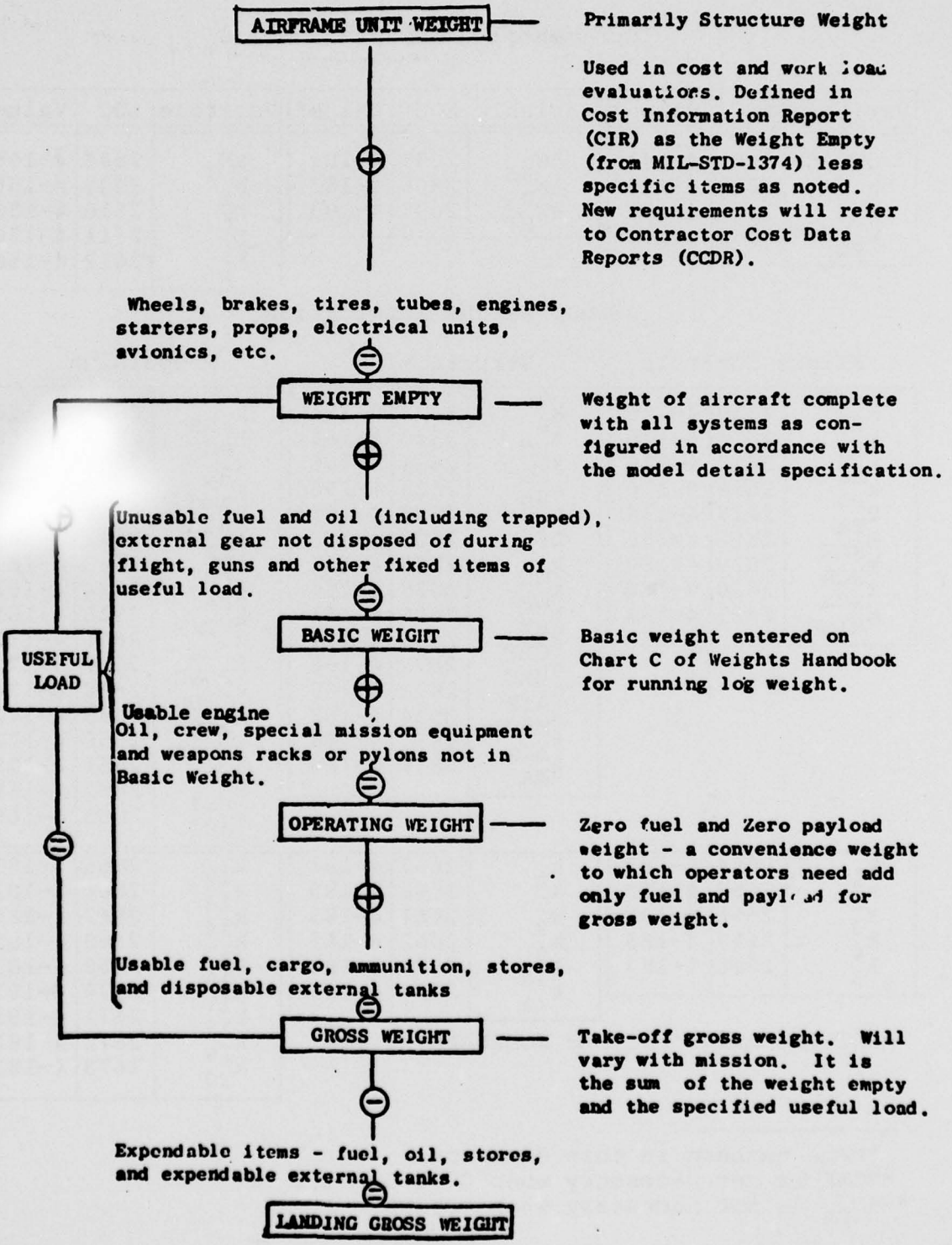

TABLE 4-11. HELICOPTER WEIGHT INFORMATION

Incremental Group Wts Nom = 0

Variable	LOC	Value*
OWE**	2601	4-144
W_{FE}	2602	4-180
W_{FUL}	2603	4-180
W_{PL}***	2604	4-183

Variable	LOC	Value*
ΔW_{FC}	2605	4-183
ΔW_{P}	2606	4-183
ΔW_{ST}	2607	4-183

Variable	LOC	Value*
RM_I	2608	4-155
W_i	2609	4-156
W_o	2610	4-156
L_i	2611	4-156
L_o	2612	4-156

Group Weight Information

Flight Controls

k_{CC}	2613	4-176
k_{RC}	2614	4-176
k_{SC}	2615	4-176
k_{FW}	2616	4-176
k_{TM}	2617	4-176
k_{SAS}	2618	4-180
k_{RCA}	2619	4-180
k_{SCA}	2620	4-180
k_{MISC}	2621	4-180

Structural

k_B	2622	4-164
Δ_{CG}	2623	4-164
k_{LG}	2624	4-166
k_{MG}	2625	4-166
k_{WW}	2626	4-155
LF	2627	4-155
k_{WS}	2628	4-156
k_{WP}	2629	4-156
k_{HT}	2630	4-161
k_{CLF}	2631	4-168
k_{NAC}	2632	4-168
k_{AIP}	2633	4-168
k_{NACA}	2634	4-168
k_{AIA}	2635	4-168
k_{NS}	2636	4-168

Propulsion

k_{PRB}	2637	4-158
k_{RBF}	2638	4-158
k_{PH}	2639	4-158
k_{amd}	2640	4-158
k_{BLDF}	2641	4-158
k_{TR}	2642	4-163
k_{AR}	2643	4-161
k_{PA}	2644	4-161
k_{VTAR}	2645	4-161
k_{PDS}	2646	4-172
k_{PDSZ}	2647	4-172
k_{TRDS}	2648	4-174
k_{ADS}	2649	4-172
k_{ADSZ}	2650	4-172
k_{FS}	2651	4-170
k_{PEI}	2652	4-169
k_{AEI}	2653	4-169

k_1	2654	4-183
k_2	2655	4-183
k_3	2656	4-183
k_4	2657	4-183
k_5	2658	4-183

k_6	2659	4-183
k_7	2660	4-183
k_8	2661	4-183
k_9	2662	4-183
k_{10}	2663	4-183
k_{11}	2664	4-183

k_{12}	2665	4-183
k_{13}	2666	4-183
k_{14}	2667	4-183
k_{15}	2668	4-183
k_{16}	2669	4-183
k_{17}	2670	4-183
k_{18}	2671	4-183
k_{19}	2672	4-183
k_{20}	2673	4-183

MULTIPLICATIVE FACTORS NOMINALLY = 1.0

*Page numbers in this document
**OWE is not necessary when OPTIND = 1,2
***W_{PL} is not necessary when OPTIND = 2

Wing

The weight of the wing is determined using one of the following three methods:

- Method I

$$W_W = 220(k)^{0.585},$$

Where

$$k = \left[R_M\right]\left[\frac{Wg\ LF}{10^4}\right]\left[\frac{Sw}{10^2}\right]\left[\log \frac{b}{B}\right]\left[\sqrt{\frac{1+\lambda}{2K}}\right]\left[\sqrt{N}\right]\left[\log_{10} V_D\right]\left[\log_{10} AR\right]$$

Legend

W_W = weight of wing - lb

R_M = wing relief as a fraction of design gross weight

W_g = design gross weight

LF = helicopter lift factor as a fraction of gross weight

S_W = planform area of wing (taken from C_L of aircraft) - ft^2

b = wingspan - ft

B = maximum fuselage width - ft

λ = taper ratio

N = ultimate load factor

V_D = dive velocity - kn

A_R = aspect ratio

k_r = wing root thickness ÷ root chord

Method I is used when a conventional aircraft wing is employed. It considers basic geometry, design criteria, and relief terms. The 220 constant represents a wing employing simple control surfaces. The 220 adjusted up or down depending on the complexity of the surface controls (200-240) must be placed in the k_{ww} location on the weight input sheet. LF, representing the wing unloading factor, due to rotor lift, and R_M a wing relief value (0.5 to 0.75) must be entered as a fraction of the design gross weight. The factors LF and R_M are nominally 1.0.

- Method II

$$W_W = 3.15(k)^{0.333}$$

Where

$$K = S_W (W_i L_i + W_o L_o)$$

Legend

W_W = weight of wing - lb

S_W = planform area of wing - ft^2

W_i = inboard wing store weight, lb/per side

W_o = outboard wing store weight, lb/per side

L_i = distance from side of fuselage to inboard store - ft

L_o = distance from side of fuselage to outboard store - ft

Method II is used when a sponson or stub type wing is used to carry stores or weapons. The trend constant 3.15 must be placed in k_{ws} of the weight input sheet. W_i and W_o must be entered in their respective locations in pounds per side. L_i and L_o must be entered as a fractional part of the wing semi-span.

- Method III

$$W_W = S_W \times PSF$$

Where

W_W = weight of wing - lb

S_W = planform area of wing - ft^2

PSF = pounds per ft^2

Method III is used when a single sponson or stub is employed. The estimated unit weight of the wing in pounds per square foot is placed in k_{wp} on the weight input sheet.

Main Rotors

The weight of the main rotor includes the combined weights of the blades and hub and hinge. The weights are derived from the following equations:

- Blades (per rotor) $W_B = 44\ a\ (k)^{0.438}$

  Where

  $$k = \left[\frac{Wg}{10^4}\right]\left[LLF\right]\left[\frac{R^2}{100}\right]\left[\frac{R-r}{10}\right]\left[b\ c\ k_b\right]\ \vdots\ \left[\frac{R^{1.6}}{k_d t}\right]$$

  NOTE: The last term is a droop factor, used only if the result is greater than 1.

- Hub and Hinge (per rotor) $W_{HH} = 61\ a\ (K)^{0.358}$

  Where

  $$k = \left[W_b\right]\left[R\right]\left[N_R\right]^2\left[P_R\right]\left[r\right]^{1.82}\left[b\right]^{2.5}\left[k_{amd}\ x10^{-11}\right]$$

  Legend

  W_b = blade weight per rotor (including root end fitting)-lb

  a = adjustment factor

  W_g = design gross weight per rotor (X 0.6 for tandem)-lb

  LLF = design limit load factor at dgw

  R = rotor radius-ft

  r = rotation to blade attachment-ft

  c = blade chord-ft

  b = number of blades per rotor

  t = maximum blade thickness at 25% R-ft

  k_b = rotor type factor: 1.00 articulated, 2.2 hingeless or teetering

  k_d = droop constant: 1000 tandem, 1200 single rotor

  W_b = blade weight per blade (including root end fitting)-lb

N_r = rotor rpm

P_r = takeoff power X (0.6 for tandem) per rotor-hp

k_{amd} = a x m x d

a = design concept: 0.53 hingeless, 1.00 other

m = material: steel = 1.00, titanium = 0.54

d = development stage: early = 1.0, developed - 0.62

In the trend equations the constants 44(blade trend) and 61 (hub and hinge trend) represent the average for the rotor weights presented in Figure 4-32 and 4-33. The blade weights are most representative of the all metal blades. The adjustment factor a is used to adjust the k factor when special design features are considered, such as high modulus materials (boron, graphite, etc.) or special features associated with the hub and/or hinge. Refer to Figures 4-32 and 4-33 to select the ^{a} term which most closely approximates the configuration being analyzed. The revised constants 44a and 61a must be placed in the k_{PRB} and k_{PH} locations on the weight input sheet along with the factors k_{RBF} (k_b in legend) and k_{amd}. If blade folding is required the k_{BLFD} block on the input sheet must also be filled in. Blade folding is entered as a fractional part of the total rotor weight. The blade fold penalty usually runs between 0.15 to 0.25 of the rotor weight depending on the folding requirements. The nominal value for k_{BLFD} is 1.0.

Auxiliary Rotors or Propellers

When auxiliary rotors or propellers are required, as in the case of compounds or propulsive tail helicopters, the following rotor/propeller equation is used:

$$W_R = 14.2\ a\ (k)^{0.67},$$

Where

$$k = \left[r\right]^{0.25} \left[\frac{Hpr}{100}\right]^{0.5} \left[\frac{Vtl}{100}\right] \left[\frac{R.b.c.}{10}\right]$$

Legend

W_R = weight of rotor or propeller-lb

R = rotor radius-ft

b = number of blades per rotor

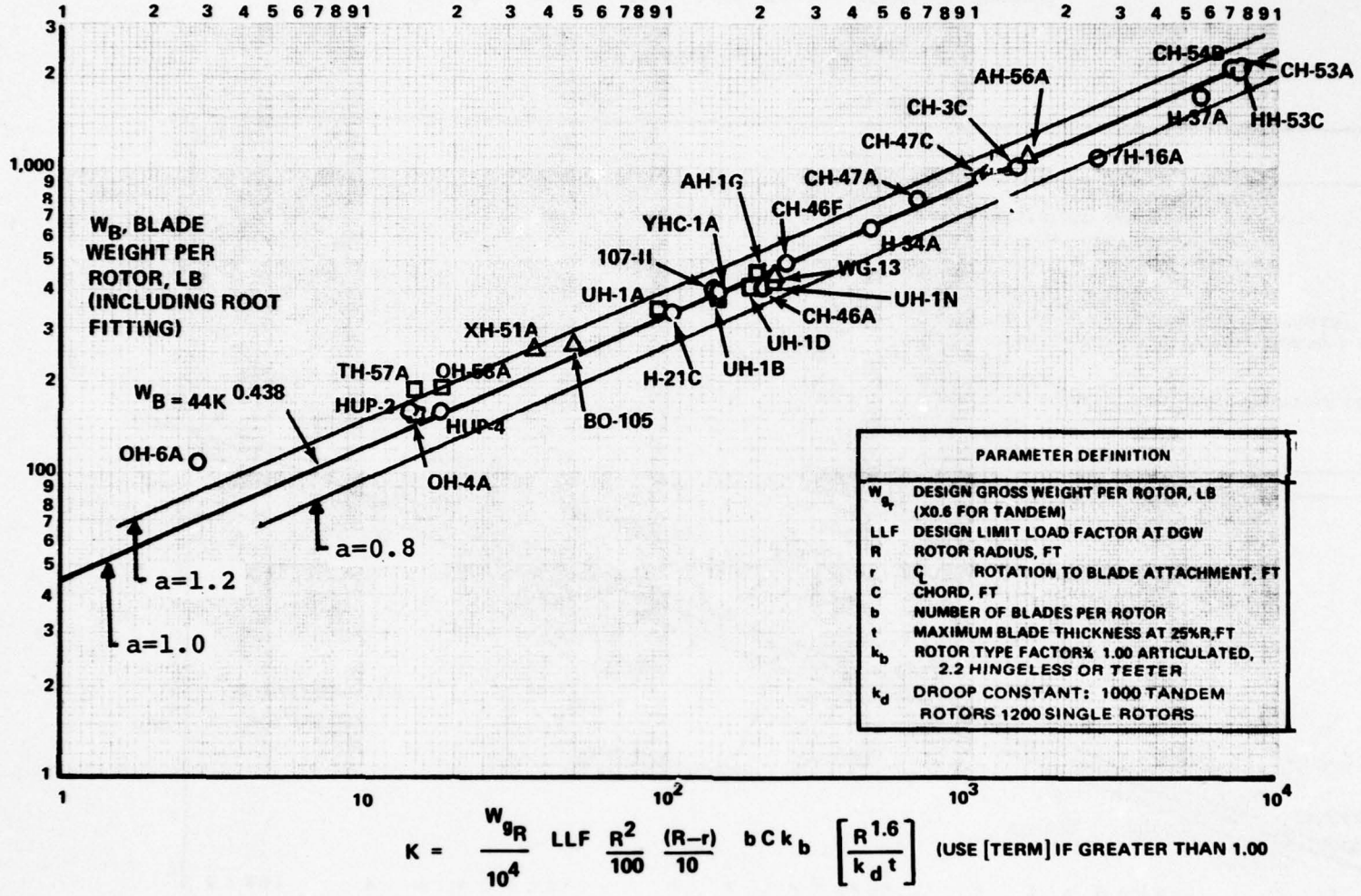

Figure 4-32. Rotor Blade Weight Trend.

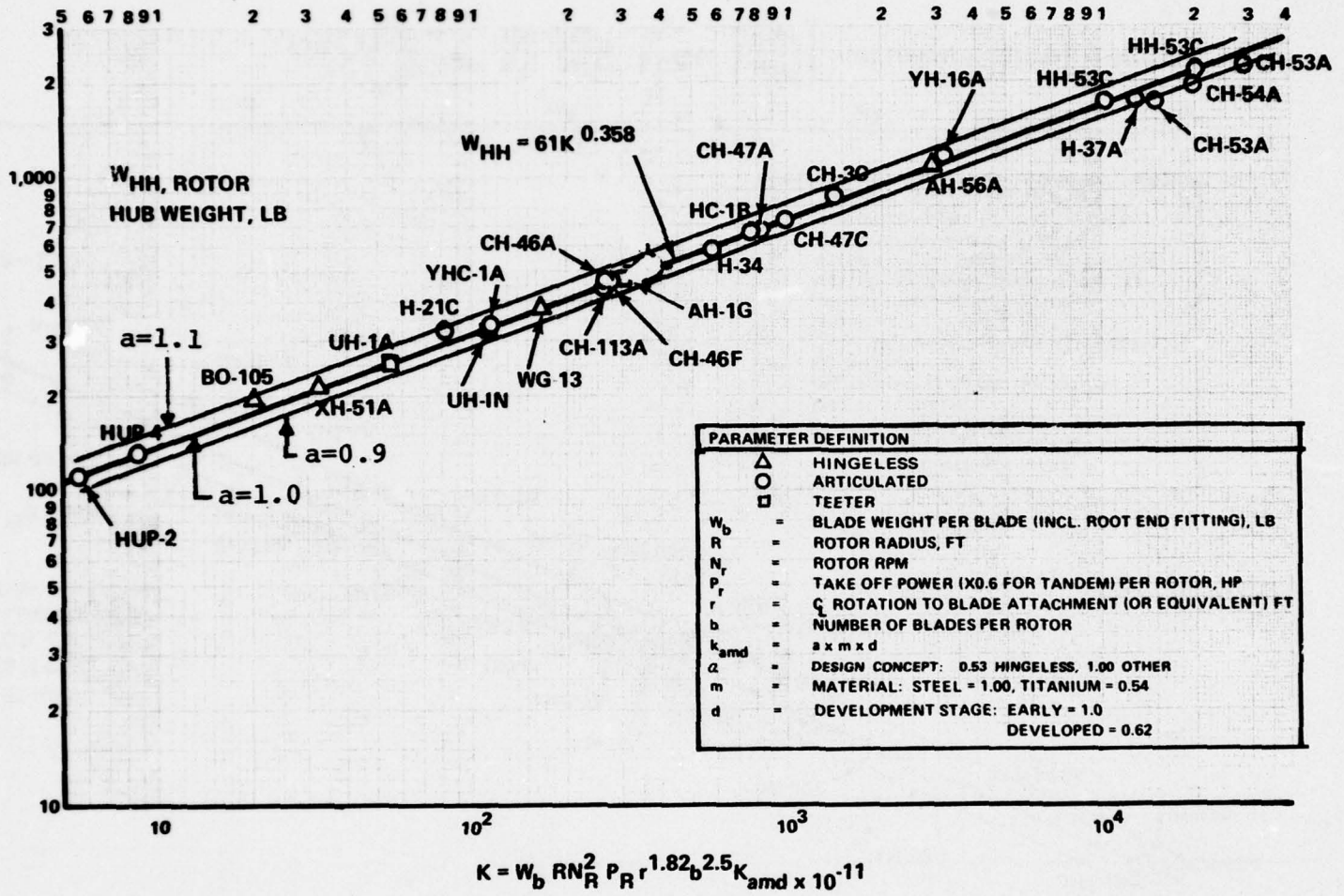

Figure 4-33. Rotor Hub and Hinge Weight Trend.

c = blade chord (average)-ft

HP_r = horsepower (xmsn limit per rotor)

V_{tl} = design limit tip speed-ft/sec

r = center line of rotation to average blade attachment point-ft

a = adjusting factor for type of system (see Figure 4-34)

In the trend equation the constant 14.2 is the average for the various rotor group weights presented in Figure 4-34. The expression a is the adjustment factor for the type of system; i.e., semirigid, pressure cycle, etc. To determine the value of k_{AR} in the propulsion block of the weight input sheet, multiply the type of system desired a by the constant 14.2. Blade folding, if required, is entered in k_{15} as a percentage factor of the total computed rotor weight. The input value would be between 0.15 to 0.25 depending on the folding requirements.

The k_{PA} block on the weight input sheet allows the auxiliary rotor input power to be increased or decreased as a fractional part of input power. (k_{PA} = 0.9 would decrease the power by 10 percent, 1.1 would increase the power by 10 percent.)

The k_{VTAR} block on the weight input sheet allows the auxiliary tail rotor tip speed to be increased or decreased as a fractional part of the input tip speed (k_{VTAR} = 0.9 would decrease the tip speed by 10 percent, 1.1 would increase it by 10 percent). The nominal input values for k_{PA} and k_{VTAR} is 1.0.

Tail Group

The tail group consists of the horizontal tail, vertical tail, ventral and tail rotor. Tail weights are determined as follows:

- Horizontal Tail - Its weight is based on a unit weight per square foot (PSF). The unit weight will normally vary between 1.0 and 2.0 PSF, depending on the type of tail being employed. The unit weights of the horizontal tails of some existing helicopters are presented as a guide for inputting the unit value in the k_{HT} block of the weight input sheet.

  OH - 58A 1.1 lb/ft^2 - fixed

  UH - 1H 1.3 lb/ft^2 - movable

  UH - 1N 1.6 lb/ft^2 - stabilizer

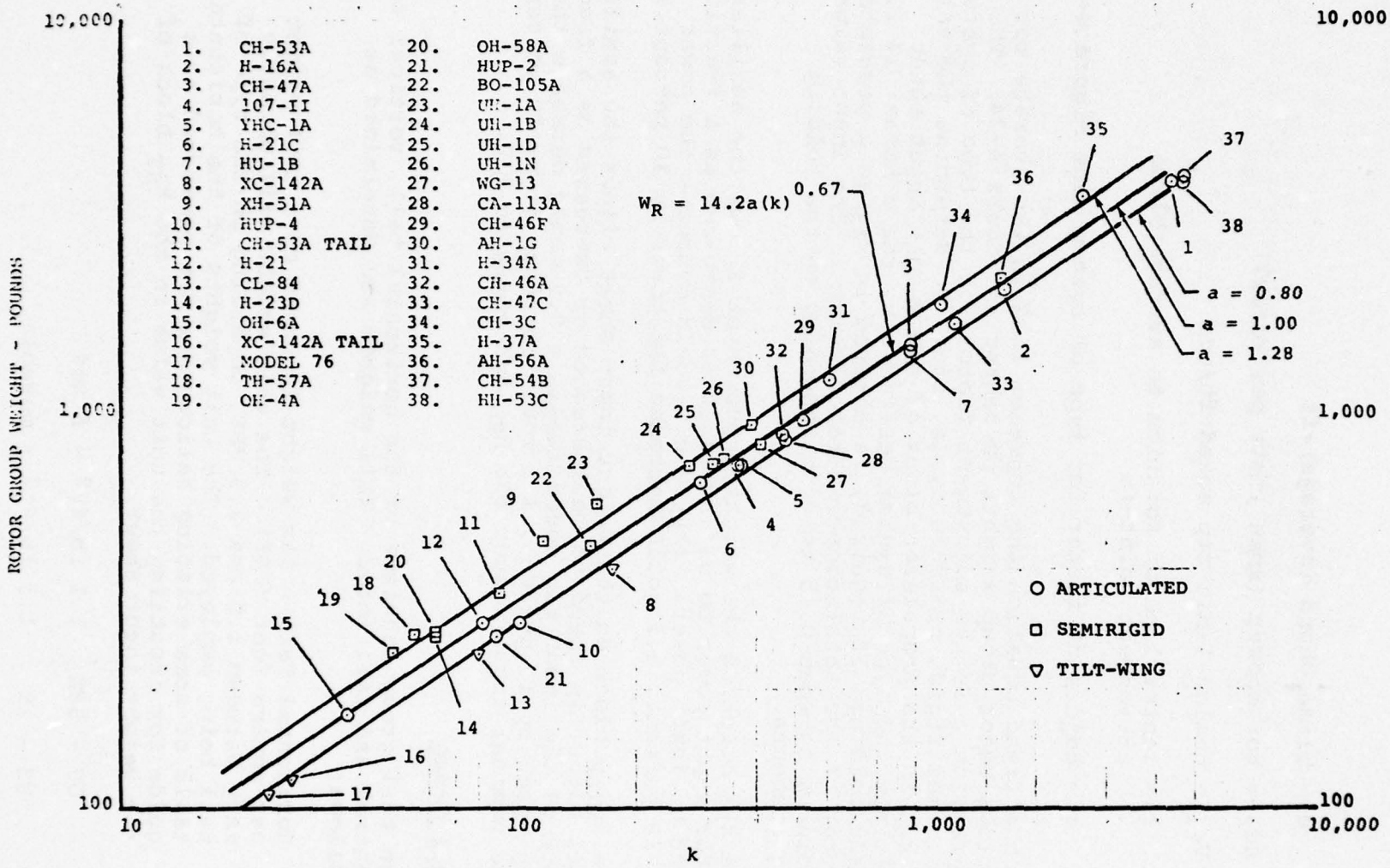

Figure 4-34. Rotor Group Weight Trend.

If horizontal tail fold is required, input this as a percentage of the total horizontal tail weight in the k_9 block of the input sheet (refer to Table 4-15).

- Vertical Tail and Ventral - The combined weights of vertical tail and ventral are included in the weight of the fuselage. The combined wetted area of both must be added to the fuselage wetted area.

- Tail Rotor - The weight of the tail rotor is derived from the following overall rotor trend equation:

$$W_R = 14.2\ a\ (k)^{0.67},$$

Where

$$k = \left[R\right]^{0.25}\left[\frac{HPr}{100}\right]^{0.5}\left[\frac{Vtl}{100}\right]\left[\frac{R.b.c.}{10}\right]$$

Legend

W_R = weight of rotor or propeller-lb

R = rotor radius-ft

b = number of blades per rotor

c = blade chord (average)-ft

HP_r = horsepower (xmsn limit per rotor)

V_{tl} = design limit tip speed-ft/sec

r = center line of rotation to average blade attachment point-ft

a = adjusting factor for type of system (see Figure 4-34)

This is the same equation used to determine the weight of the auxiliary rotors. The trend is explained above under Auxiliary Rotors or Propellers. If blade folding is required, a factor as a fraction of the computed tail rotor weight must be placed in k_{14} on the weight input sheet. Fold penalties normally vary between 0.15 and 0.25 of total rotor weight depending on the fold requirements. A value for k_{TR} must be inserted in its proper location on the weight input sheet.

Body Group

The weight of the body structure is determined from the following equation:

$$W_{BG} = 125\ a\ (k)^{0.8},$$

Where

$$k = \left\{ \left[\frac{W_g}{10^4} \right] \left[\eta \right] \left[\frac{S_f}{10^3} \right] \left[L_c + L_{rw} + \Delta CG \right] \right\}^{0.5} \left[\text{Log } V_{MAX} \right]$$

Legend

W_g = structural design gross weight - lb

η = ultimate load factor

S_f = wetted area of fuselage - ft^2 (includes fairings, pod, vertical tail and ventral)

L_c = length of cabin (measured from nose to end of cabin floor) - ft

L_{rw} = length of rampwell - ft

ΔCG = center of gravity range at design gross weight - ft

V_{MAX} = maximum speed - kn

a = body correction factor

Figure 4-35 presents a group of commercial and military single and tandem rotor helicopters. A mean line of 125 has been selected as the average for all the aircraft shown. The body correction factor a permits the 125 constant to be corrected in accordance with the configuration being analyzed. When a large number of cutouts are required as in the case of large doors, many windows, large floor cutouts, etc., the a term would be greater than 1. Where the fuselage is relatively clean, the a could be less than 1. Refer to Figure 4-35 to select the a term which best describes the configuration. The revised constant 125a is the k_B term to be inserted in the appropriate box on the weight input sheet. The center of gravity range, in feet, must also be placed in the Δ_{CG} block on the input sheet.

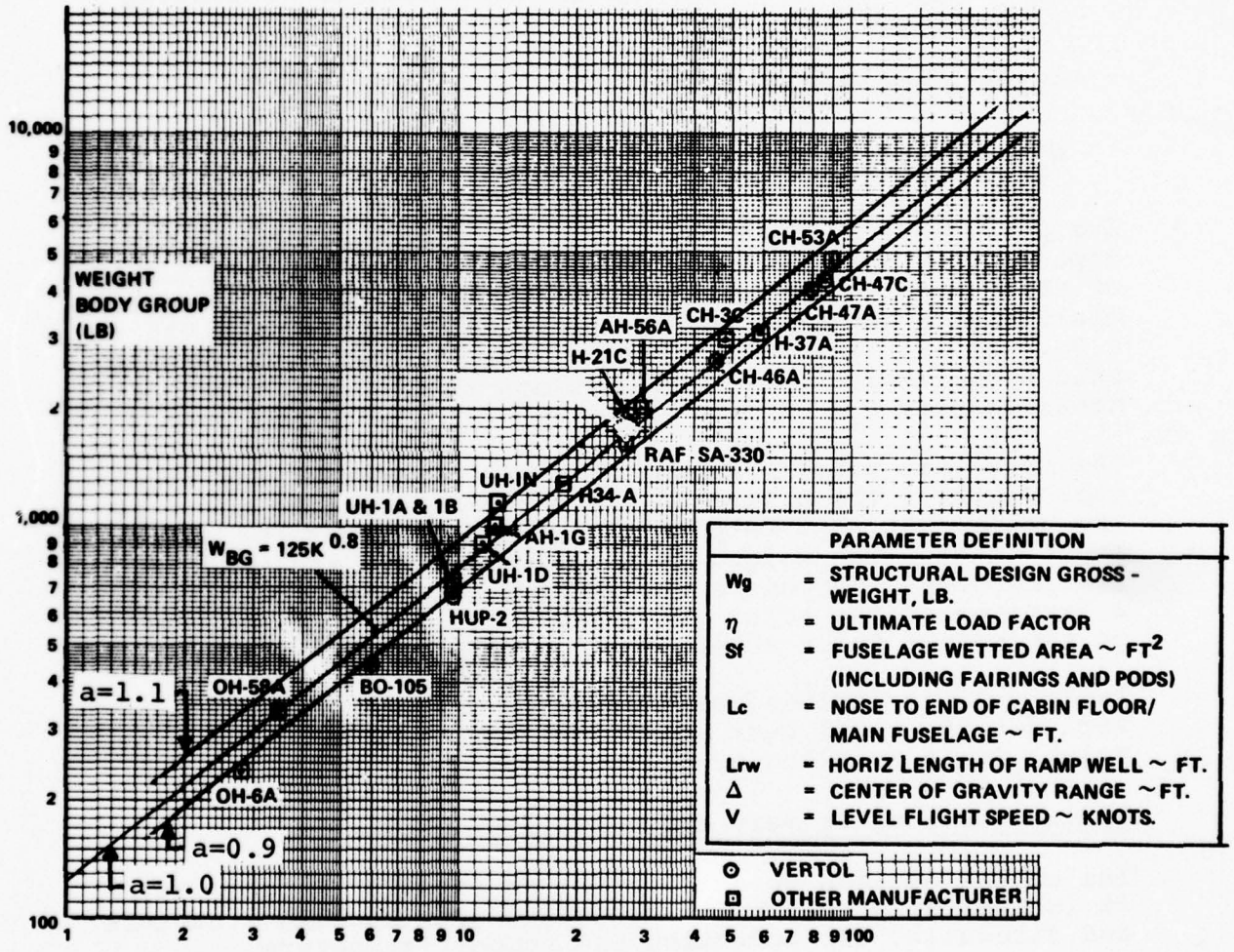

$$K = \left[\frac{W_g}{10^4}\,\eta\,\frac{S_f}{10^3}\,(L_c + L_{rw} + \Delta)\right]^{0.5} \text{Log } V_{max}$$

5C5-24

Figure 4-35. Body Group Weight Trend.

Alighting Gear

For the normal tricyle gear geometry, the total landing gear weight including the running gear (wheels, tires, brakes, etc.), structure (shock struts, drag struts, support structure, etc.), and controls (retraction, steering, systems, etc.) is expressed as a percentage of the design gross weight where:

$$W_{LG} = (k_{LG}) W_g$$

Where W_{LG} = total weight of the landing gear (including tail bumper)

$$k_{LG} = \frac{\text{landing gear weight}}{\text{gross weight}}$$

W_g = design gross weight

The percentage will normally vary between 0.015 to 0.050 depending on the design limit sink speed and the complexity of the system. Conventional landing gear without retraction, operating on improved runways normally run between 0.015 to 0.04. Adding retraction usually adds another 0.005 to 0.01. Skid type landing gear usually weigh about 0.015 times design gross weight.

The main gear usually weighs about 80 percent of the total gear weight. The k term in the weight expression above is the value that must be placed in the k_{LG} box of the weight input sheet. The weight of the main gear is included by placing 0.80, or your estimate of the main gear weight as a fraction of the total gear weight, in the k_{MG} location on the weight input sheet.

Table 4-12 is included as a guide in selecting k_{LG}. It includes the total gear weight as a percentage of the gross weight for a sampling of helicopters.

Engine Section (Primary and Auxiliary)

The engine section weight appears as item 10 in Table 4-10. It is basically the engine mounts, engine nacelle structure and firewalls, air induction and support structure.

- Engine mounts - The weight of the engine mounts is determined from the expression

$$W_{EM} = N_E \left(W_E \times N_{CLF} \right)^{0.41}$$

TABLE 4-12. LANDING GEAR WEIGHTS

AIRCRAFT	GROSS WEIGHT (LB)	TOTAL GEAR WEIGHT (LB)	PERCENT OF GROSS WEIGHT
OH-6A	2400	58	.024
XH-51A	3500	134	.038
BO-105	4410	96	.022
UH-1B	6600	112	.017
UH-1D	6600	118	.018
UH-1N	10000	121	.012
UH-34D	11291	413	.036
AH-56A	16995	605	.036
CH-46A	19000	589	.031
CH-3C	19500	690	.035
CH-46D	20800	587	.028
CH-46E	20800	655	.031
HH-3B	21187	700	.033
CH-47A	28550	1060	.037
CH-47B	33000	1086	.033
CH-47C	33000	1076	.033
CH-53A	35042	1014	.029
CH-54A	38000	1794	.047
CH-54B	64700	2277	.035

Enter the crash load factor N_{CLF} in the k_{CLF} block of the weight input block. (This considers both the primary and/or auxiliary engine sections.)

- Engine nacelle structure, supports and firewalls

  These items are determined from the expression

  $$W_{NAC} = N_E \ (S_{NAC}) \ (PSF)$$

  Enter the estimated unit weight in pounds per square foot (PSF) in the k_{NAC} and/or the k_{NACA} blocks of the input sheet. This value normally varies between 0.75 and 1.25 PSF. It could go as high as 2.0 psf if the cowling is used as a walkway or work platform.

- Air induction - The weight of the air induction system is determined from the expression

  $$W_{AIP} = N_E \ (E_{DIA} \ X \ L_{AIP}) \quad (PSF)$$

  Enter the estimated unit weight in pounds per square foot (PSF) in the k_{AIP} and/or the k_{AIA} blocks of the input sheet. This value normally varies between 0.7 to 1.0 PSF. An option is provided for determining the weight of the air induction system. If k_{AIP} or k_{AIA} is greater than 5.0 the program automatically assumes the value is the weight of the air induction system in pounds.

The k_{NS} term on the input sheet is a nacelle strut factor used when an engine is suspended from an aircraft employing a wing. Enter a unit weight value in PSF in the k_{NS} box. The nominal value is 0.

Legend

W_{EM} = weight of engine mounts - lb

N_E = number of primary engines

W_E = weight of each primary engine - lb

N_{CLF} = aircraft crash load factor

W_{NAC} = weight of each primary engine nacelle - lb

S_{NAC} = wetted area of each nacelle - sq. ft.

PSF = pounds per square foot

W_{AIP} = weight of air induction system - feet

E_{DIA} = primary engine DIA - feet

L_{AIP} = length of air inlet duct

The weight of the primary and/or auxiliary engines is determined as part of the engine sizing routine considered elsewhere in the program. There is no provision for determining the engine weight(s) on the weight input sheet. The Δ_{WP} and K_{18} and K_{19} blocks of the input sheet provide a method for adding weight to the engine(s) if desired. (Refer to Table 4-13.

The engine installation weights represent the total weight of items 14, 15, 16, 17, and 19 shown on the weight summary form, Table 4-10. The weights of engine (primary and auxiliary) installation items will vary depending on the type and powerplant arrangement of the configuration being sized. No attempt is made here to describe all the various approaches that may be used to evaluate their weights, but instead a simple method of taking a percentage of the weight of the dry engines is used to define the weight of the engine installation. The percentages applied will depend on the judgment of the user. Table 4-13 presents the engine installation weights as a percentage of the engine weight for a group of existing helicopters. This may be used as a guide for selecting the weight fraction to be placed in k_{PEI} and/or k_{AEI} on the weight input sheet. An option is provided for determining the weight of the engine installation. If k_{PEI} or k_{AEI} is greater than 1.0, the program automatically assumes the value is the weight of the engine installation in pounds.

Fuel System

The weight of the fuel system, defined as k_{FS} in the propulsion block of the weight input sheet, will vary depending on the capacity, type, and complexity of the system required. For aircraft having simple fuel systems located in the fuselage, sponsons or wing, the value for k_{FS} would range between 0.02 and 0.07; for aircraft requiring self-sealing tanks with more complex systems, the value would range between 0.10 and 0.15. The fuel system factors represent fuel system weight per pound of mission fuel required.

Drive System (Primary and Auxiliary)

The weight of the drive system (primary and auxiliary) including gear boxes, accessory drives, shafting, oil, supports, etc., is derived from the following equation:

$$W_{DS} = 250\ a\ (k_D)^{0.67},$$

where

$$k_D = \left[\frac{P_x}{N_R}\right] \left[\ \right] \left[Z\right]^{1/4} \left[K_t\right]$$

TABLE 4-13. ENGINE INSTALLATION WEIGHTS

AIRCRAFT	AIRCRAFT ENG. WEIGHT (LB)	ENG. INSTAL. WEIGHT (LB)	PERCENT OF ENGINE WEIGHT
OH-6A	142	36	.254
XH-51A	244	97	.398
BO-105	424	81	.191
UH-1B	474	148	.312
UH-1D	501	147	.293
UH-1N	727	164	.226
UH-34D	1387	260	.187
AH-56A	695	337	.485
CH-46A	600	161	.268
CH-3C	611	130	.213
CH-46D	678	187	.276
CH-46E	886	207	.234
HH-3B	649	136	.210
CH-47A	1160	173	.149
CH-47B	1188	175	.147
CH-47C	1350	244	.181
CH-53A	1432	283	.198
CH-54A	1804	193	.107
CH-54B	2094	394	.188

Note: Engine installation weights include the total weight of the following items:

- Engine Exhaust System
- Engine Cooling
- Engine Controls
- Engine Starting
- Engine Lubrication

Legend

W_{DS} = weight of the drive system - lb (excluding tail rotor boxes

P_X = drive system horsepower rating (tandem rotor P_X = 1.2 X takeoff rating)

N_R = rotor rpm at takeoff

Z = number of stages in main rotor drive

K_t = configuration factor; 1.00 for single rotor, 1.30 for tandem

a = drive system correcting factor

The drive system adjusting factor a is used to account for type, number of boxes, special features, etc., included in the drive system. Figure 4-36 gives typical examples of the a factor. To determine the k_{PDS} and/or the k_{ADS} figure to place on the weight input sheet, multiply the 250 constant by your selection of a. The k_{PDSZ} and/or k_{ADSZ} (number of stages) must also be placed in their respective locations on the input sheet. As a guide for determining the number of stages to input the following is offered:

	Stages
● Lightweight helicopters (less than 10,000 pounds gross weight)	2
● Medium weight helicopters (10,000 pounds to 30,000 pounds gross weight)	3-4
● Heavy weight helicopters (more than 30,000 pounds gross weight)	4-5

An additional guide in determining the number of stages is to assume one stage for each gear reduction in the drive system. This would include angle boxes. (Assume ½ of a stage for 1:1 angle boxes.) The total additive sum of the stages resulting from this approach would then be placed in their respective k locations on the input sheet.

Tail Rotor Drive System

The weight of the tail rotor drive system, including shafting, etc., is derived from the following equation:

$$W_{DS} = 300\ a\ (k)^{0.8},$$

Where

$$k = \frac{HP_{Total} \times 1.1}{RPM_{Rotor}}$$

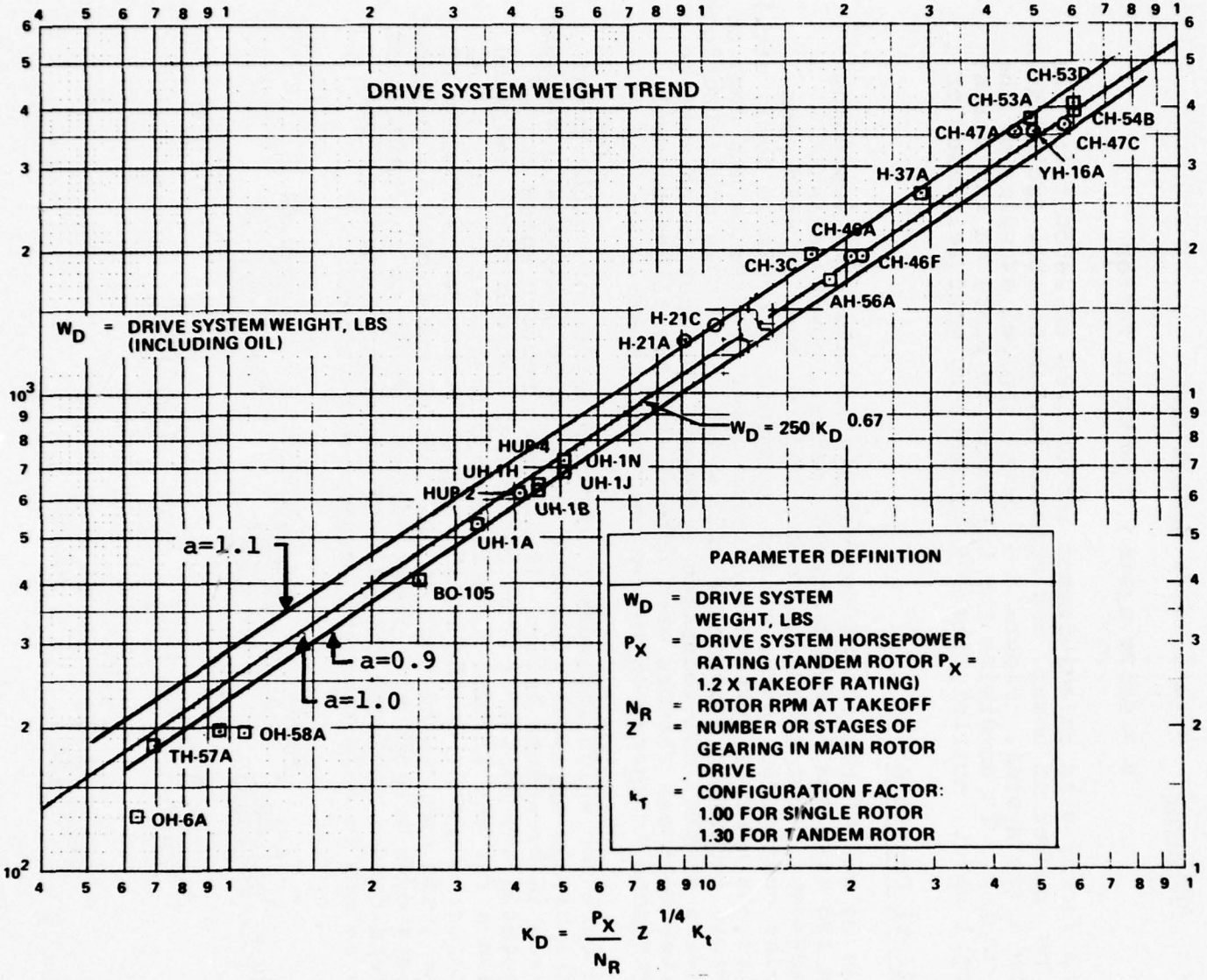

Figure 4-36. Drive System Weight Trend- Primary and Auxiliary.

Legend

W_{DS} = weight of drive system - lb

HP_{Total} = total tail rotor horsepower

RPM_{Rotor} = tail rotor design rpm

a = drive system adjustment factor

The factor a is an adjustment factor used to account for the type, number of boxes, and special features, etc. included in the drive system. Figure 4-37 gives typical examples of the a factor. To determine the k_{DS} value to place on the weight input sheet, multiply the 300 constant by your selection of a.

Flight Controls

The weight of the flight control system will vary depending on the type and system required (manual, power assisted, redundant, dual redundant, etc.) and the type of heicopter being configured (pure, winged, compound, propulsive tail, etc.). Aircraft control systems requiring power assistance and dual or triple redundant components will weigh more than configurations having simple, non-redundant systems. Considerations must be given to these factors when determining the flight control constants to insert on the weight input sheet.

An equation which includes a combined series of weight trend expressions applicable to most any type of helicopter configuration is presented below. It includes factors which can be isolated and applied to the particular vehicle being analyzed. Values for the various k factors described must be put in their proper locations on the weight input sheet. A description of the items comprising each of the control sub-groups is included along with a range of k input values. Refer to the referenced trend curves included for each of the major control groups as an aid in selecting the respective k values.

$$W_{FC} = k_{cc}\left[\frac{W_g}{1000}\right]^{0.41} + k_{RC}\left[\frac{C\sqrt{R\,W_B}}{1000}\right]^{1.11} + k_{SC}\left[\frac{W_R}{100}\right]^{0.84}$$

$$+ k_{FW}\left[W_g\right] + k_{TM}\left[W_g\right] + k_{SAS} + K_{RCA}\left[W_R\right]$$

$$+ k_{SCA}\left[\frac{W_R}{100}\right]^{0.84} + k_{Misc.}$$

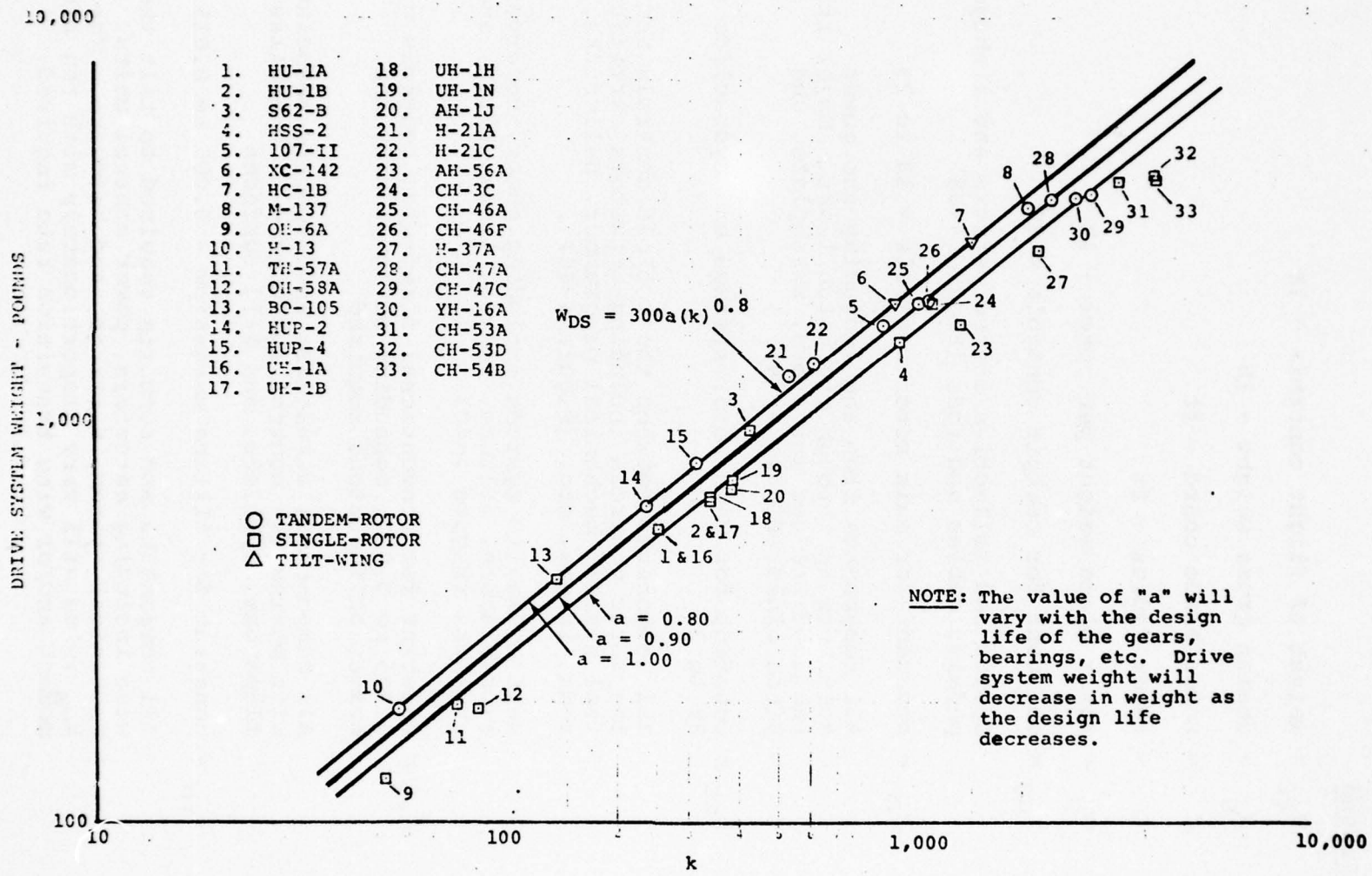

Figure 4-37. Drive System Weight Trend-Tail Rotor.

Legend

W_{FC} = weight of flight controls - lb

W_g = design gross weight - lb

C = rotor blade chord - ft

R = rotor radius - ft

W_b = rotor blade weight per rotor - lb

k_{CC} = constant for cockpit controls = 26

Cyclic and collective control sticks and linkages, pedals, cables and rods (Figure 4-38)

k_{RC} = constant for main rotor controls = 18 to 23

All components from and including the power actuators up through the pitch links. Major items included are the actuators, swashplate, and pitch links (Figure 4-39)

k_{SC} = constant for main rotor systems and hydraulics = 25 to 35

All components between the cockpit controls and the rotor controls including actuators, artificial feel system, mechanical programmer, bellcranks, rods, idlers, etc. (Figure 4-40)

Main hydraulic systems including pumps, reservoirs, accumulators, filters, valves, lines, fluid, and supports (Figure 4-40)

k_{FW} = constant for conventional fixed-wing controls = 0.005 to 0.020, depending on complexity and number of functions required

All components, actuators, and supports associated with moving the control surfaces - LE umbrellas, flaperons, spoilers, and tail surfaces

k_{TM} = constant for tilting mechanism - 0.005 to 0.015

All components and supports required to tilt the wing including actuators, power control units, mechanical system, fittings, and hardware. The k_{TM} value will vary proportionately with the hinge moment and/or wing transition rate required.

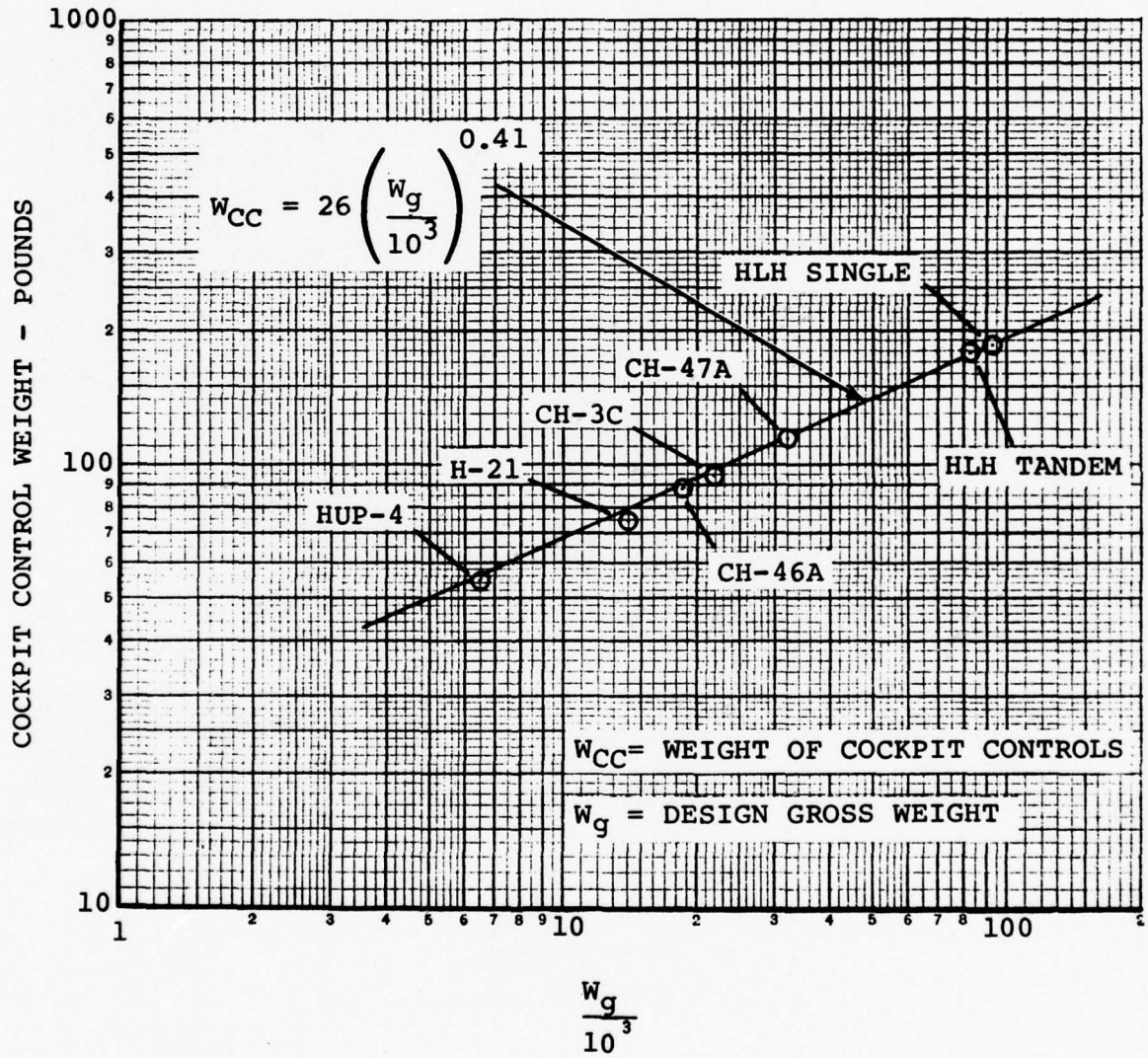

Figure 4-38. Cockpit Controls Weight Trend.

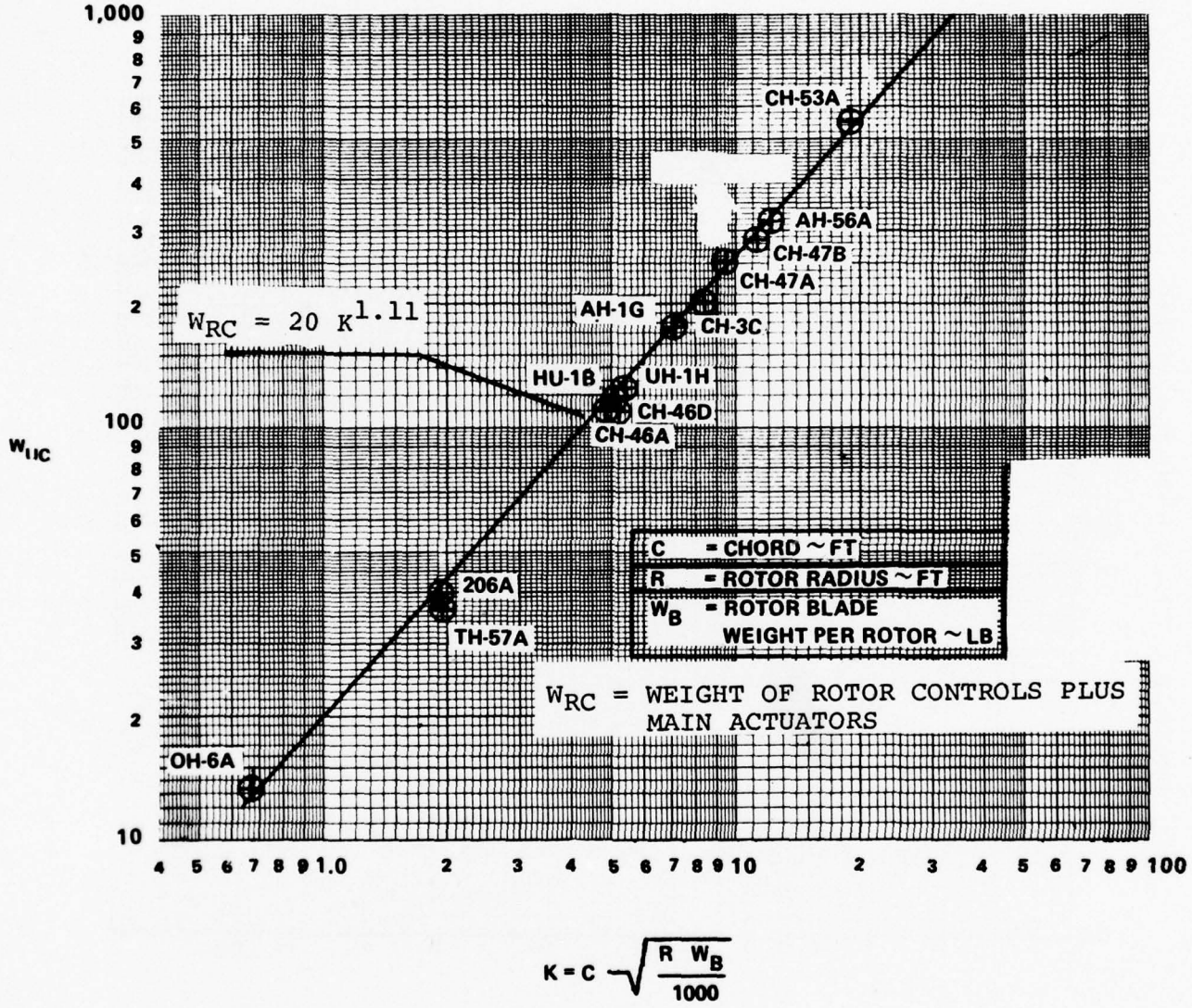

Figure 4-39. Rotor Controls Weight Trend.

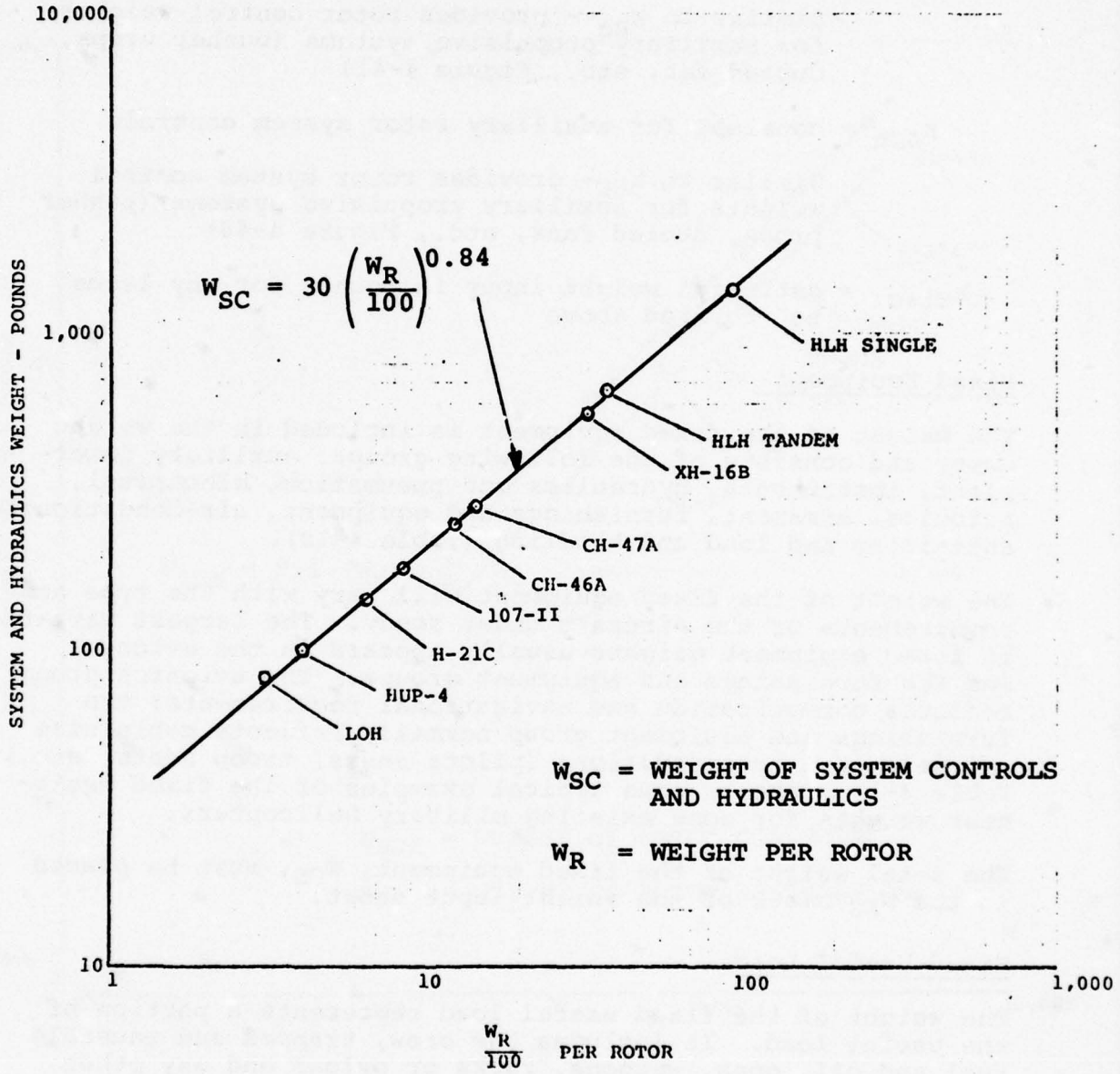

Figure 4-40. Rotor System and Hydraulics Weight Trend.

k_{SAS} = constant for stability-augmented system = 20 pounds to 100 pounds, depending on system required

k_{RCA} = constant for auxiliary rotor controls

Similar to k_{RC} - provides rotor control weights for auxiliary propulsive systems (pusher props, ducted fan, etc., Figure 4-41)

k_{SCA} = constant for auxiliary rotor system controls

Similar to k_{SC}- provides rotor system control weights for auxiliary propulsive systems (pusher props, ducted fans, etc., Figure 4-40)

$k_{Misc.}$ = estimated weight input in pounds for any items not covered above

Fixed Equipment

The weight of the fixed equipment is included in the weight empty and consists of the following groups: auxiliary power-plant, instruments, hydraulics and pneumatics, electrical, avionics, armament, furnishings and equipment, air-conditioning, anti-icing and load and handling (Table 4-10).

The weight of the fixed equipment will vary with the type and requirements of the aircraft under study. The largest variation in fixed equipment weights usually appears in the avionics and the furnishings and equipment groups. The avionics group reflects communication and navigational requirements; the furnishings and equipment group normally reflects cabin size and personnel accommodations (pilots seats, troop seats, etc.). Table 4-14 presents some typical examples of the fixed equipment weights for some existing military helicopters.

The total weight of the fixed equipment, W_{FE}, must be placed in the W_{FE} block of the weight input sheet.

Fixed Useful Load

The weight of the fixed useful load represents a portion of the useful load. It includes the crew, trapped and unusable fuel and oil, guns, weapons, racks or pylons and any other fixed items of useful load which makes the aircraft operational. Typical weights for fixed useful load items are included in Table 4-14 as a guide for inputting a number in the W_{FUL} block of the weight input sheet.

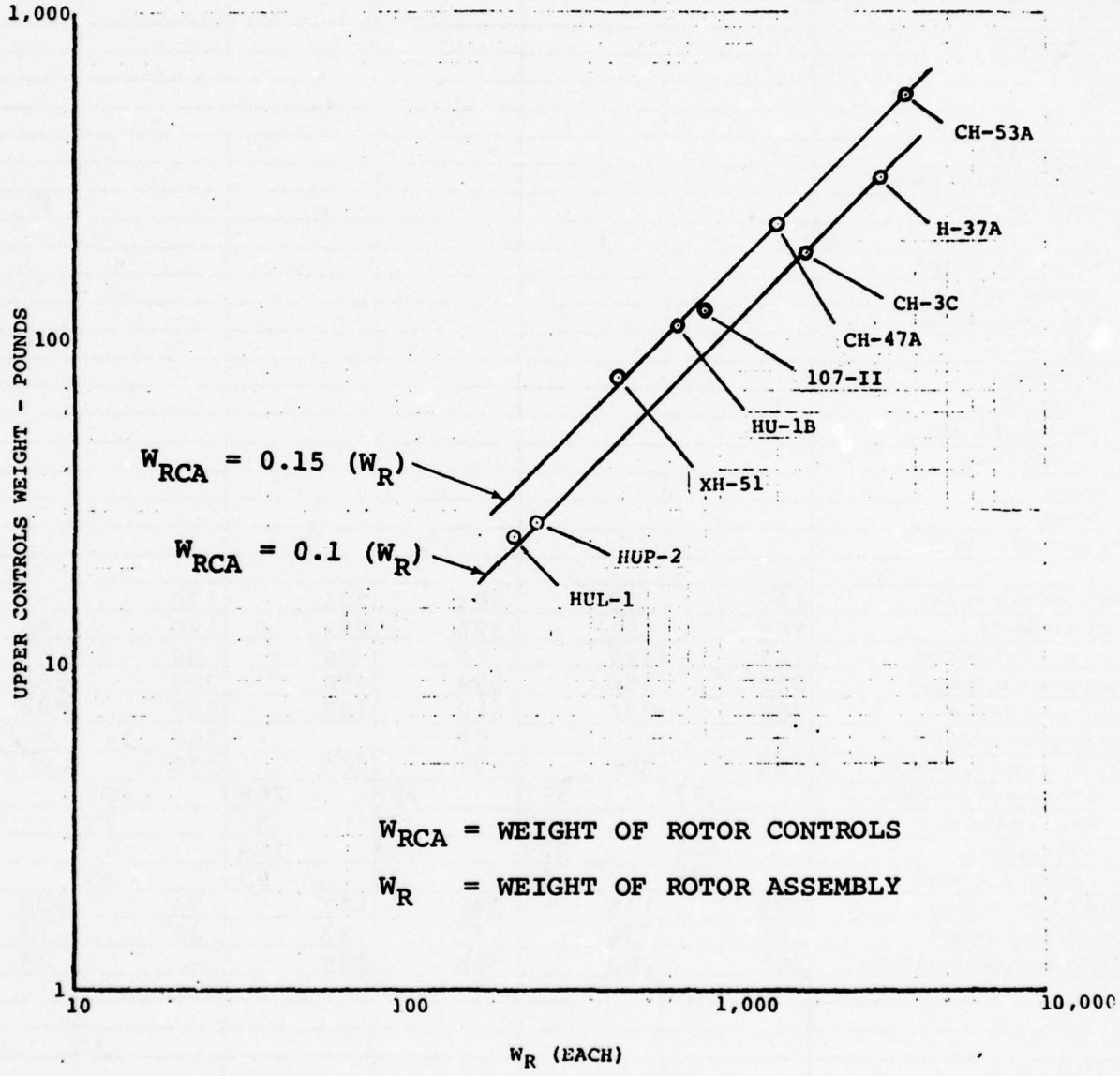

Figure 4-41. Auxiliary Rotor Controls Weight Trend.

TABLE 4-14.
FIXED EQUIPMENT AND FIXED USEFUL LOAD WEIGHTS

	CH-46A	CH-47A	CH-53A	CH-3C	AH-56A	107-II-10
WING						
ROTOR						
TAIL						
SURFACES						
ROTOR						
BODY						
BASIC						
SECONDARY						
ALIGHTING GEAR GROUP						
ENGINE SECTION						
PROPULSION GROUP						
ENGINE INST'L						
EXHAUST SYSTEM						
COOLING						
CONTROLS						
STARTING						
PROPELLER INST'L						
LUBRICATING						
FUEL						
DRIVE						
FLIGHT CONTROLS						
AUX. POWER PLANT	100	103	204	224	136	-
INSTRUMENTS	169	161	393	232	126	98
HYDR. & PNEUMATIC	163	227	112	66	86	-
ELECTRICAL GROUP	620	560	594	450	377	583
AVIONICS GROUP	386	274	612	437	609	602
ARMAMENT GROUP	-	-	18	-	548	-
FURN. & EQUIP. GROUP	788	896	971	569	273	1300
ACCOM. FOR PERSON.	182	391	298	208	165	555
MISC. EQUIPMENT	77	107	384	87	73	601
FURNISHINGS	481	329	214	175	-	-
EMERG. EQUIPMENT	48	69	75	99	35	144
AIR CONDITIONING	128	145	237	123	75	128
ANTI-ICING GROUP	186	34	77	37	42	13
LOAD AND HANDLING GP.	305	260	358	189	-	14
FIXED EQUIP, WEIGHT	2845	2660	3576	2327	2272	2738
CREW	540	600	660	645	400	400
TRAPPED LIQUIDS	20	41	18	20	31	28
ENGINE OIL	30	28	48	33	32	31
SURVIVAL KIT				63	-	
ARMOR					399	
GUNS					1235	
ATTENDANT						150
BAGGAGE						370
FUEL						
FIXED USEFUL LOAD	590	669	726	761	2097	979

REV.

FORM 26391 (2/73)

Payload

The weight of the payload is determined by the mission requirements. The total weight of the payload must be put in the W_{PL} block of the weight input sheet.

Incremental Group Weights

The incremental group weights section of the weight input sheet is provided to enable the user to add fixed increments of weight where desired. Definitions and values for some of the items in this group have already been discussed. ΔW_{FC}, ΔW_{P}, and ΔW_{ST} represent incremental weights of the flight controls group, propulsion group, and structural group, respectively. Any value inserted in the incremental group weight section remains constant regardless of gross weight. The nominal value for any block in this section is 0, except for R_M which is nominally 1.0.

Group Weight Information

The nominal value for items in this section of the weight input sheet is 0, except as noted in the text. All blocks must be filled in. Definitions and constants for the various k factors have been previously discussed in the respective subgroup definitions.

Multiplicative Factors

The multiplicative factors described as K_1 through K_{20} on the weight input sheet provide the capability of performing weight sensitivity studies. The factors are nominally 1. All blocks must be filled in. To vary the weight of any subgroup (k_{CC}, k_B, k_{DS}, etc.), insert the desired value in the appropriate multiplicative box. Refer to Table 4-15 to relate the various k factors with their respective groups. Inserting a value of 1.1 would increase the weight of the respective group by 10 percent; a value of 0.9 would decrease it by 10 percent, etc. The values in this group will vary with gross weight.

TABLE 4-15.
MULTIPLICATIVE FACTORS

K	LOCATION	LETTER CODE	DESCRIPTION
K1	2654	W_{RC}	WEIGHT OF MAIN ROTOR CONTROLS
K2	2655	W_{SC}	WEIGHT OF MAIN ROTOR SYSTEM CONTROLS
K3	2656	W_{FW}	WEIGHT OF FIXED WING CONTROLS
K4	2657	W_{RCA}	WEIGHT OF AUXILIARY ROTOR CONTROLS
K5	2658	W_{SCA}	WEIGHT OF AUXILIARY ROTOR SYSTEM CONTROLS
K6	2659	W_{B}	WEIGHT OF BODY
K7	2660	W_{LG}	WEIGHT OF LANDING GEAR
K8	2661	W_{W}	WEIGHT OF WING
K9	2662	W_{HT}	WEIGHT OF HORIZONTAL TAIL
K10	2663	W_{NAC}	WEIGHT OF PRIMARY NACELLE
K11	2664	W_{NACA}	WEIGHT OF AUXILIARY NACELLE
K12	2665	W_{PRB}	WEIGHT OF PRIMARY ROTOR BLADES
K13	2666	W_{PH}	WEIGHT OF PRIMARY ROTOR HUB
K14	2667	W_{TR}	WEIGHT OF TAIL ROTOR
K15	2668	W_{AR}	WEIGHT OF AUXILIARY ROTOR
K16	2669	W_{PDS}	WEIGHT OF PRIMARY DRIVE SYSTEM
K17	2670	W_{ADS}	WEIGHT OF AUXILIARY DRIVE SYSTEM
K18	2671	W_{PE}	WEIGHT OF PRIMARY ENGINE
K19	2672	W_{AE}	WEIGHT OF AUXILIARY ENGINE
K20	2673	W_{TRDS}	WEIGHT OF TAIL ROTOR DRIVE SYSTEM

4.11.2 Aircraft Balance

A preliminary aircraft balance for single rotor helicopters is included in the program which locates the main rotor system ℄ relative to the required center of gravity of the operating weight empty of the aircraft. A description of the input values to be included on the weight-balance information sheet (page 2 of the weight information sheet) follows:

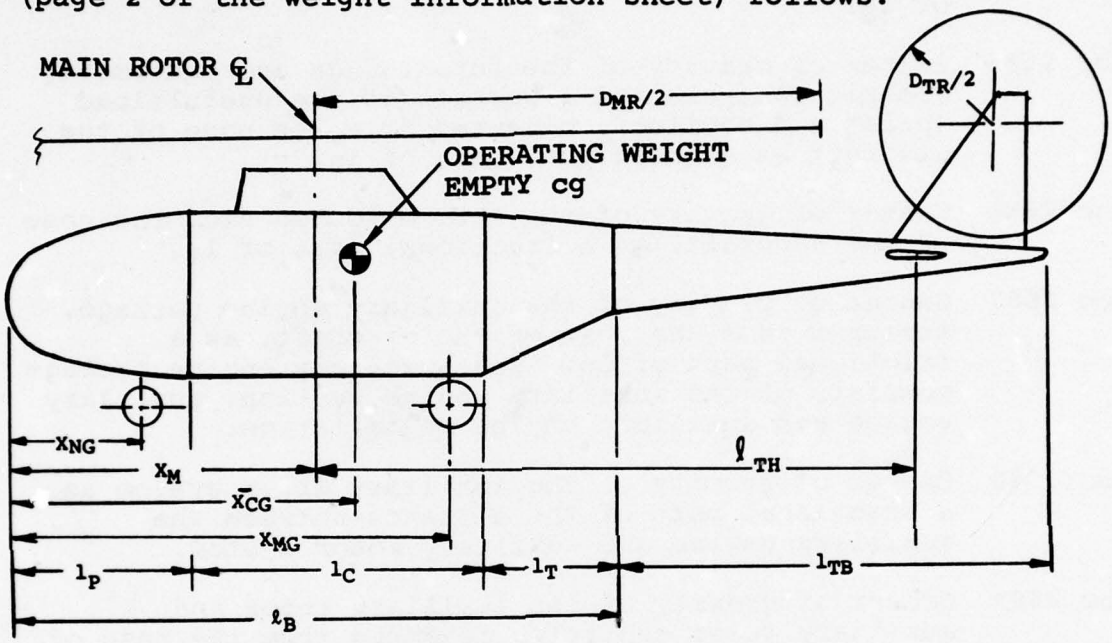

Loc 2678 Center of gravity of the fuselage, measured from the nose of the aircraft, as a fractional part of l_B.

Loc 2679 Distance in feet between the OWE center of gravity and the main rotor center line (negative value (-) is forward of OWE cg, plus value (+) is aft of OWE cg).

Loc 2680 Center of gravity of the nose gear measured from the nose of the aircraft, as a fractional part of l_B.

Loc 2681 Center of gravity of the main gear, measured from the nose of the aircraft, as a fractional part of l_B.

Loc 2682 Center of gravity of the primary engine package, measured from the nose of the aircraft as a fractional part of l_B. The engine package consists of the engine section, engine, engine installation and fuel system.

Loc 2683 Center of gravity of the primary drive system measured as a fractional part of the distance between the main rotor and tail rotor. The tail rotor drive system weight and balance are computed and located automatically.

Loc 2684 Center of gravity of the avionics system, measured from the nose of the aircraft, as a fractional part of l_B.

Loc 2685 Center of gravity of the furnishings and equipment, cockpit controls and a portion of the useful load (pilot and copilot), measured from the nose of the aircraft as a fractional part of l_B.

Loc 2686 Center of gravity of the APU, measured from the nose of the aircraft, as a fractional part of l_B.

Loc 2687 Center of gravity of the auxiliary engine package, measured from the nose of the aircraft, as a fractional part of l_B. The auxiliary engine package consists of the auxiliary engine section, auxiliary engine and auxiliary engine installation.

Loc 2688 Center of gravity of the auxiliary drive system as a fractional part of the distance between the auxiliary engine and auxiliary rotor system.

Loc 2689 Center of gravity of the auxiliary rotor and auxiliary rotor controls, measured from the nose of the aircraft, as a fractional part of ℓ_{TB}.

Loc 2690 Center of gravity of the system controls, measured from the nose of the aircraft, as a fractional part of l_B.

Loc 2691 Center of gravity of the auxiliary system controls, measured from the nose of the aircraft, as a fractional part of l_B.

Loc 2692 Total weight of the avionics group weight plus SAS input from flight controls column of weight input sheet.

Loc 2693 Total weight of furnishings and equipment group located in the pilot's compartment and the weight of the cockpit controls (CC) as determined from the input constant in flight controls column of weight input sheet.

Loc 2694 Total weight of auxiliary power unit (APU) installation.

Loc 2695 Fractional part of fixed useful load (pilot, co-pilot, etc.) located in the pilot's compartment.

Loc 2696 Tail boom weight expressed as a fractional part of the computed body weight. The center of gravity of the tail boom is automatically computed in the program.

Items of the operating weight empty not included in the location descriptions presented above are located at the aircraft center of gravity as computed by the balance subroutine. An example of a completed weight-balance information sheet for a typical single rotor helicopter is shown below.

WEIGHT-BALANCE INFORMATION
(Required Only When MRPIND > 0)

Variable	Loc.	Value
(X_{CGF}/l_B)	2678	0.425
ΔCG_R	2679	0.10
(X_{NG}/l_B)	2680	0.216
(X_{MG}/l_B)	2681	0.754
(X_{PE}/l_B)	2682	0.727
$(X_{PDS}/\angle X_{PDS})$	2683	0.593
(X_{AV}/l_B)	2684	0.485

Variable	Loc.	Value
(X_{FURN}/l_B)	2685	0.334
(X_{APU}/l_B)	2686	0.424
(X_{AE}/l_B)	2687	0
$(X_{ADS}/\angle X_{ADS})$	2688	0
(X_{AR}/l_{TB})	2689	0
(X_{SC}/l_B)	2690	0.581
(X_{ASC}/l_B)	2691	0

Variable	Loc.	Value
W_{AV}	2692	469
W_{FURN}	2693	416
W_{APU}	2694	172
K_{FULS}	2695	0.731
K_{TBBS}	2696	0.130

GROUP WEIGHT STATEMENT

AIRCRAFT

(INCLUDING ROTORCRAFT)

ESTIMATED - CALCULATED - ACTUAL

(Cross Out Those Not Applicable)

CONTRACT NO. _____

AIRCRAFT, GOVERNMENT NO. _____

AIRCRAFT, CONTRACTOR NO. _____

MANUFACTURED BY _____

		MAIN	AUX
ENGINE	MANUFACTURED BY		
	MODEL		
	NO.		
	TYPE		

PAGES REMOVED	PAGE NO.

GROUP WEIGHT STATEMENT

MIL-STD-1374 PART I — WEIGHT EMPTY — Page _____

Name _____ — Model _____

Date _____ — Report _____

1	WING GROUP						
2	BASIC STRUCTURE - CENTER SECTION						
3	- INTERMEDIATE PANEL						
4	- OUTER PANEL						
5	- GLOVE						
6	SECONDARY STRUCTURE (Incl. Wing Fold Weight. Lbs.)						
7	AILERONS (Incl. Balance Weight Lbs.)						
8	FLAPS - TRAILING EDGE						
9	- LEADING EDGE						
10	SLATS						
11	SPOILERS						
12							
13							
14	ROTOR GROUP						
15	BLADE ASSEMBLY						
16	HUB & HINGE (Incl. Blade Fold Weight Lbs.)						
17							
18							
19	TAIL GROUP						
20	BASIC & SECONDARY STRUCT. - STABILIZER						
21	- FIN (Incl. Dorsal)						
22	VENTRAL						
23	ELEVATOR (Incl. Balance Weight Lbs.)						
24	RUDDERS (Incl. Balance Weight Lbs.)						
25	TAIL ROTOR - BLADES						
26	- HUB & HINGE						
27							
28	BODY GROUP						
29	BASIC STRUCTURE - FUSELAGE or HULL						
30	- BOOMS						
31	SECONDARY STRUCTURE - FUSELAGE or HULL						
32	- BOOMS						
33	- SPEEDBRAKES						
34	- DOORS, RAMPS, PANELS, & MISC.						
35							
36							
37	ALIGHTING GEAR GROUP (Type:)						
38	LOCATION	Running Gear*	Arrest Gear*	Structure	Controls	XXXXXX	
39							
40							
41							
42							
43							
44							
45	ENGINE SECTION or NACELLE GROUP						
46	BODY - INTERNAL						
47	- EXTERNAL						
48	WING - INBOARD						
49	- OUTBOARD						
50							
51							
52	AIR INDUCTION SYSTEM						
53	DOORS, PANELS, & MISC.						
54							
55							
56							
57	TOTAL STRUCTURE (To Be Brought Forward)						

*Change to Floats & Struts for Water Type Gear.

MIL-STD-1374 PART I

GROUP WEIGHT STATEMENT
WEIGHT EMPTY

Page _____
Model _____
Report _____

Name _____
Date _____

1	PROPULSION GROUP		Auxiliary		Main	
2	ENGINE INSTALLATION					
3						
4	ACCESSORY GEAR BOXES & DRIVE					
5						
6	EXHAUST SYSTEM					
7	ENGINE COOLING					
8	WATER INJECTION					
9	ENGINE CONTROL					
10	STARTING SYSTEM					
11	PROPELLER INSTALLATION					
12	SMOKE ABATEMENT					
13	LUBRICATING SYSTEM					
14	FUEL SYSTEM					
15	TANKS - PROTECTED					
16	UNPROTECTED					
17	PLUMBING, etc					
18	DRIVE SYSTEM					
19	GEAR BOXES, LUB SY & ROTOR BRK					
20	TRANSMISSION DRIVE					
21	ROTOR SHAFTS					
22	JET DRIVE					
23						
24	FLIGHT CONTROLS GROUP					
25	COCKPIT CONTROLS (Autopilot Lbs.)					
26	SYSTEMS CONTROLS					
27						
28						
29	AUXILIARY POWER PLANT GROUP					
30	INSTRUMENTS GROUP					
31	HYDRAULIC & PNEUMATIC GROUP					
32						
33	ELECTRICAL GROUP					
34						
35	AVIONICS GROUP					
36	EQUIPMENT					
37	INSTALLATION					
38						
39	ARMAMENT GROUP (Incl. Passive Prot. Lbs.)					
40	FURNISHINGS & EQUIPMENT GROUP					
41	ACCOMMODATION FOR PERSONNEL					
42	MISCELLANEOUS EQUIPMENT					
43	FURNISHINGS					
44	EMERGENCY EQUIPMENT					
45						
46	AIR CONDITIONING GROUP					
47	ANTI - ICING GROUP					
48						
49	PHOTOGRAPHIC GROUP					
50						
51	LOAD & HANDLING GROUP					
52	AIRCRAFT HANDLING					
53	LOAD HANDLING					
54						
55	MANUFACTURING VARIATION					
56	TOTAL FROM PAGE 2					
57	WEIGHT EMPTY					

MIL-STD-1374 PART I

GROUP WEIGHT STATEMENT
USEFUL LOAD AND GROSS WEIGHT

Page _____

Name _____

Model _____

Date _____

Report _____

1	LOAD CONDITION								
2									
3	CREW (No.)								
4	PASSENGERS (No.)								
5	FUEL		Location	Type	Gals.				
6	UNUSABLE								
7	INTERNAL								
8									
9									
10									
11	EXTERNAL								
12									
13									
14	OIL								
15	TRAPPED								
16	ENGINE								
17									
18	FUEL TANKS (Location)								
19	WATER INJECTION FLUID (Gals.)								
20									
21	BAGGAGE								
22	CARGO								
23									
24	GUN INSTALLATIONS								
25	GUNS	Location	Fix. or Flex	Quantity	Caliber				
26									
27									
28	AMMO.								
29									
30									
* 31	SUPP'TS								
** 32	WEAPONS INSTALL. (Incl. Submarine Detection Expendables)								
33									
34									
35									
36									
37									
38									
39									
40									
41									
42									
43									
44									
45									
46	EQUIPMENT								
47									
48	SURVIVAL KITS & LIFE RAFTS								
49									
50	OXYGEN								
51									
52									
53									
54									
55	TOTAL USEFUL LOAD								
56	WEIGHT EMPTY								
57	GROSS WEIGHT								

*If Removable and Specified as Useful Load.

**List Stores, Missiles, Sonobuoys, etc. Followed by Racks, Launchers, Chutes, etc. Not Part of Weight Empty. List Identification, Location, and Quantity for All Items Shown Including Installation.

MIL-STD-1374 PART I

GROUP WEIGHT STATEMENT
DIMENSIONAL AND STRUCTURAL DATA

Page _____

Name _____ Model _____

Date _____ Report _____

1	WING, ROTOR & TAIL GROUPS	SPAN OR RADIUS (FT)	SPAN AT **** 25% CHORD	THEO ROOT ** CHORD (IN)	MAX THICK ** ROOT CHORD (IN)	THEO TIP CHORD (IN) **	MAX THICK ** TIP CHORD (IN)
2	WING						
3							
4	MAIN ROTOR (Blades/Rotor)						
5	TAIL ROTOR (Blades/Rotor)						
6	HORIZ. TAIL						
7	VERT. TAIL						
8							
9	AREAS - (Sq. Ft.)	Wing	MAIN ROTOR BLADE AREA	TAIL ROTOR BLADE AREA	Horiz. Tail	Vert. Tail	Dorsal
10	(Theo. for Wing & Rotor, All Others Exposed)						
11		Speed Brks.	Flaps (L.E.)	Flaps (T.E.)	Slats	Spoilers	Ailerons
12	AREAS - (Sq. Ft.)						
13	BODY & NACELLE GROUPS	Length (Ft.)	Depth (Ft.)	Width (Ft.)	WETTED AREA (SQ FT)	Vol. (Cu. Ft.)	VOL PRESS (CU FT)
* 14	FUSELAGE or HULL						
15	BOOMS						
16	NACELLES						
17							
18							
19	ALIGHTING GEAR GROUP	Length - Oleo Ext.		Oleo Travel		Length - Arrest Hook	
20		Axle to ℄ Trunnion		Ext. to Collapsed		Hook Trunnion to Pt.	
21	LOCATION						
22	DIMENSIONS (Inches)						
23							
24	PROPULSION GROUP						
25	ENGINES	S.L.S. THRUST IN LBS. ENG. WITH AFTERBURNER		S.L.S. THRUST IN LBS. ENG. WITHOUT AFTERBURNER		MAX. S.L.S. SHAFT H.P.	SHAFT R.P.M. AT MAX. H.P.
26	MAIN						
27	AUXILIARY						
28	ROTOR DRIVE SYSTEM	Design H.P.	Input R.P.M.	OUTPUT R.P.M. AT ROTOR	INTER ROTOR R.P.M.	NUMBER GEAR BOXES	
29							
30		Protected		Unprotected		Integral	
31	FUEL - INTERNAL *** LOCATION	No. Tanks	Gallons	No. Tanks	Gallons	No. Tanks	Gallons
32	WING						
33	FUSELAGE						
34	EXTERNAL ***						
35							
36	OIL						
37	ELECTRICAL & LOAD & HANDLING GROUPS	QUAN. MAIN GENERATORS	GENERATOR OUTPUT D.C.	GENERATOR OUTPUT A.C.		CARGO FLOOR AREA	
38							
39							
40	STRUCTURAL DATA - CONDITION	BODY PLUS INT. CONTENT LBS	EXTERNAL WT. ON BODY	FUEL IN WINGS (LBS)		DESIGN GROSS WEIGHT	Ult. L.F.
41	FLIGHT - MANEUVER						
42	- GUST						
43	LANDING						
44							
45	MAX. GROSS WITH ZERO WING FUEL						
46	CATAPULTING						
47	LIMIT LANDING SINK SPEED (Ft./Sec.)						
48	LIFT ASSUMED FOR LANDING DESIGN CONDITION (% W)						
49	STALL SPD. - LDG. CONFIG. - POWER OFF						
50	PRESSURIZED CABIN PRESS. DIFFERENTIAL ULT. DESIGN FLIGHT (P.S.I.)						
51	ROTOR TIP SPD AT DESIGN LIMIT	R.P.M.	Power	Ft./Sec.	CONTRACTOR DESIGN FACTOR		
52							
53	% DESIGN LOAD	Wing		Rotor		Rotor	
54	DESIGN SPEED AT S.L. (Knots)	Level		Dive			
55	DESIGN SPD. AT OTHER ALTITUDES		Alt.		Alt.		
56							
57	DCPR WEIGHT (Airframe)						

*Nose to aft tip of fuselage (excluding equipment protuberances)
**Parallel to ℄ at ℄ Aircraft for Wing & Tail. Insert inches from ℄ Rotor for Rotors.
***Total Usable Capacity.
****Insert inches from ℄ Rotor to Blade Attachment for Rotors.

MIL-STD-1374 PART I

GROUP WEIGHT STATEMENT

Page _____
Model _____
Report _____

Name _____
Date _____

AIRFRAME WEIGHT

The Airframe Weight to be entered on line 57 of page 5 of the Group Weight Statement should be derived here in detail showing those items deducted from weight empty as required by the document "Cost Information Reports (CIR) for Aircraft, Missiles, and Space Systems" dated 21 April, 1966, or subsequent revisions thereto. Airframe weight is the same as previously called AMPR andDCPR and is not to be confused with "Work Breakdown Structure (WBS) Airframe Cost Definition."

WEIGHT EMPTY
DEDUCT THE FOLLOWING ITEMS
(ITEMIZE)

_____
_____
_____
_____
_____
_____
_____

AIRFRAME WEIGHT

4.12 PERFORMANCE CALCULATIONS SUBPROGRAM

The flow chart of the control loop for the performance calculations subprogram is shown in Figure 4-42. This routine monitors the flow during calculation of mission performance data and calculates the total fuel required at the end of the mission.

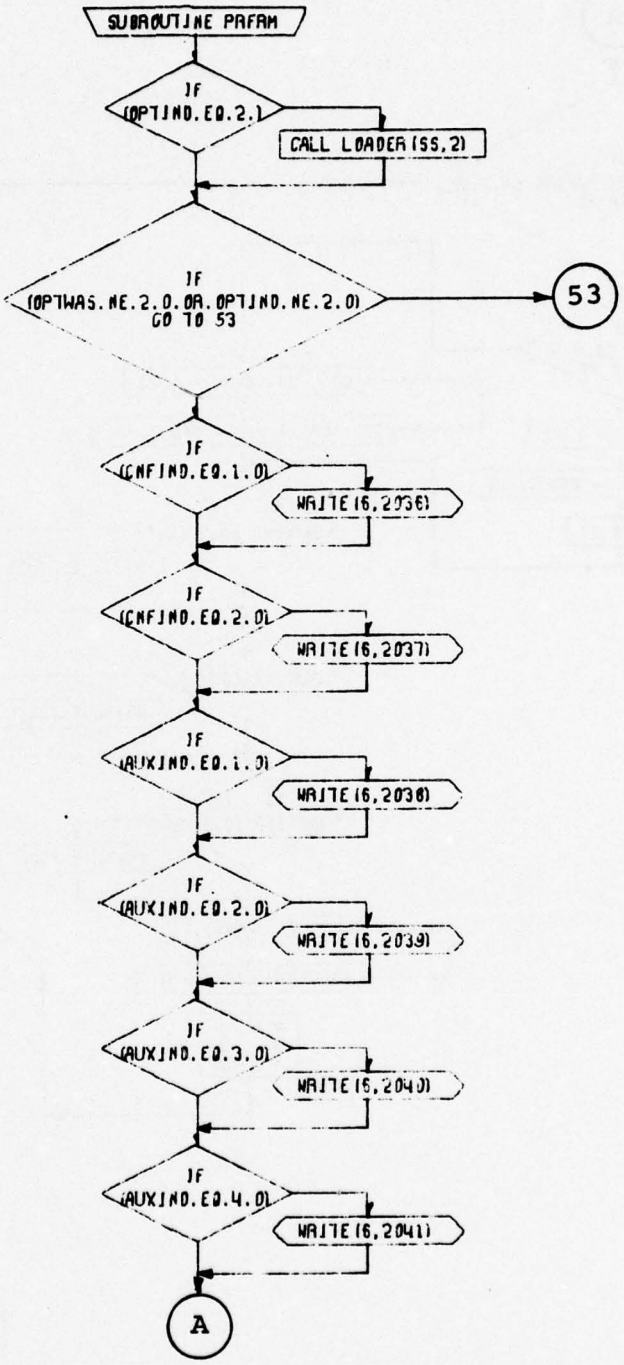

Figure 4-42. Performance Calculations Subprogram Flow Chart (Part 1 of 5).

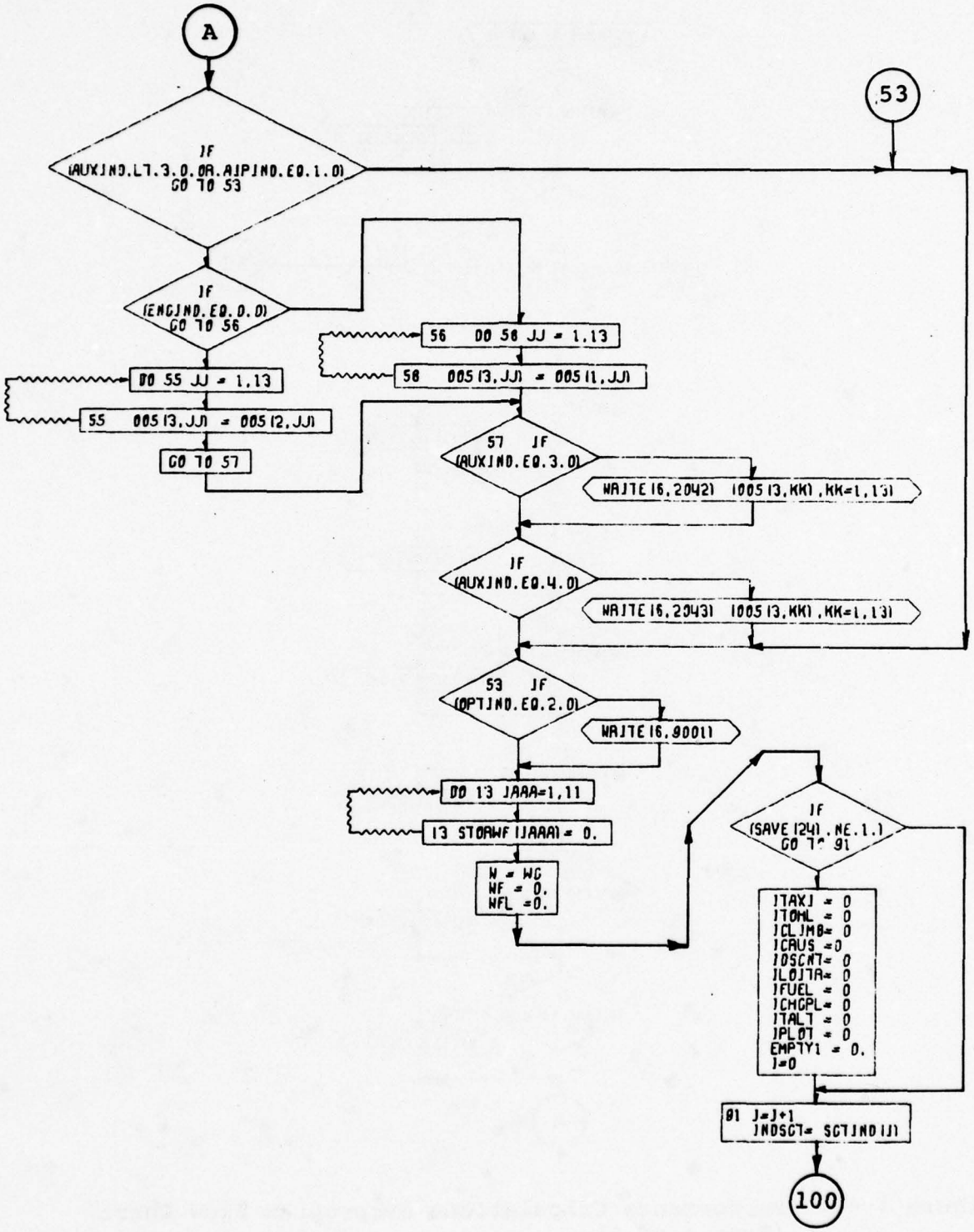

Figure 4-42. Performance Calculations Subprogram Flow Chart (Part 2 of 5).

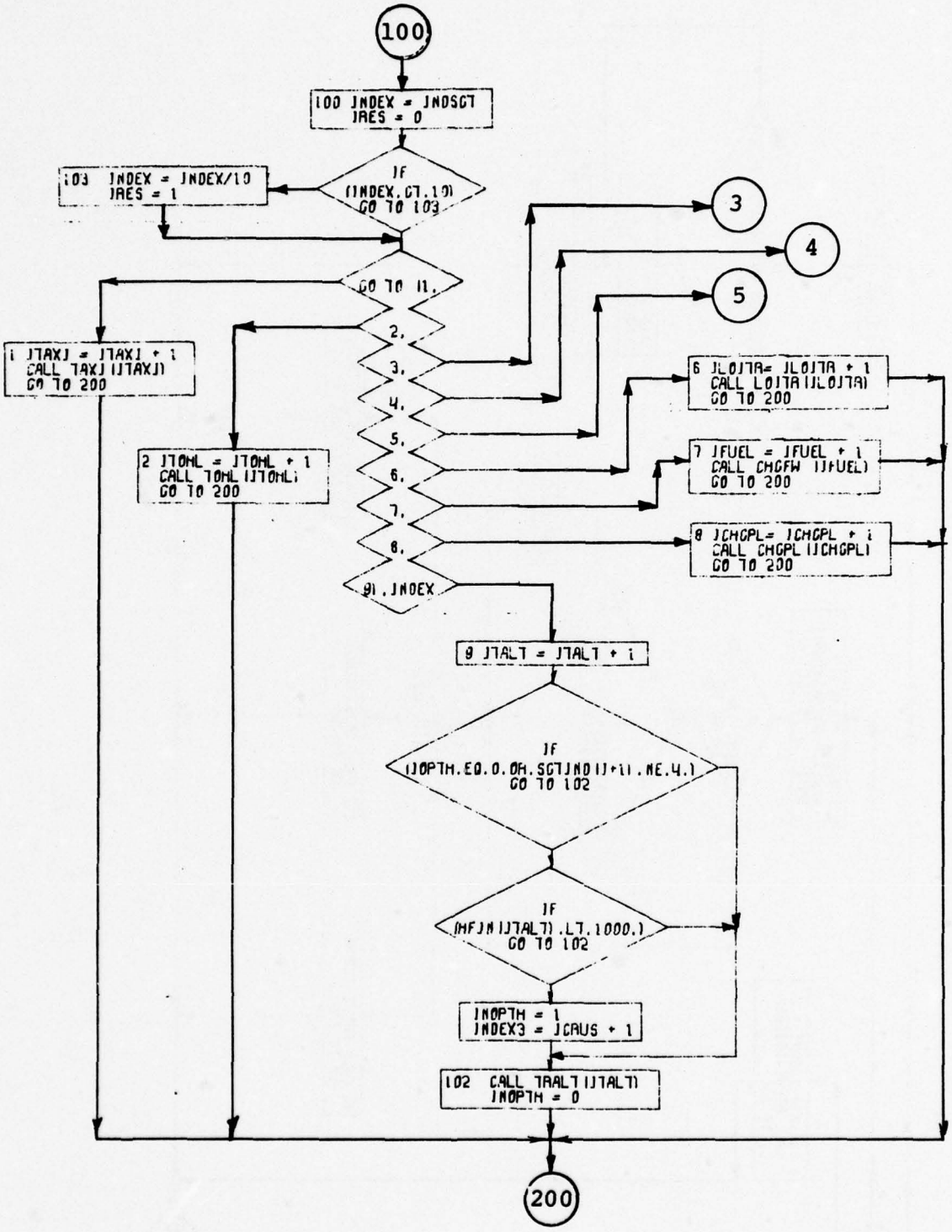

Figure 4-42. Performance Calculations Subprogram Flow Chart (Part 3 of 5).

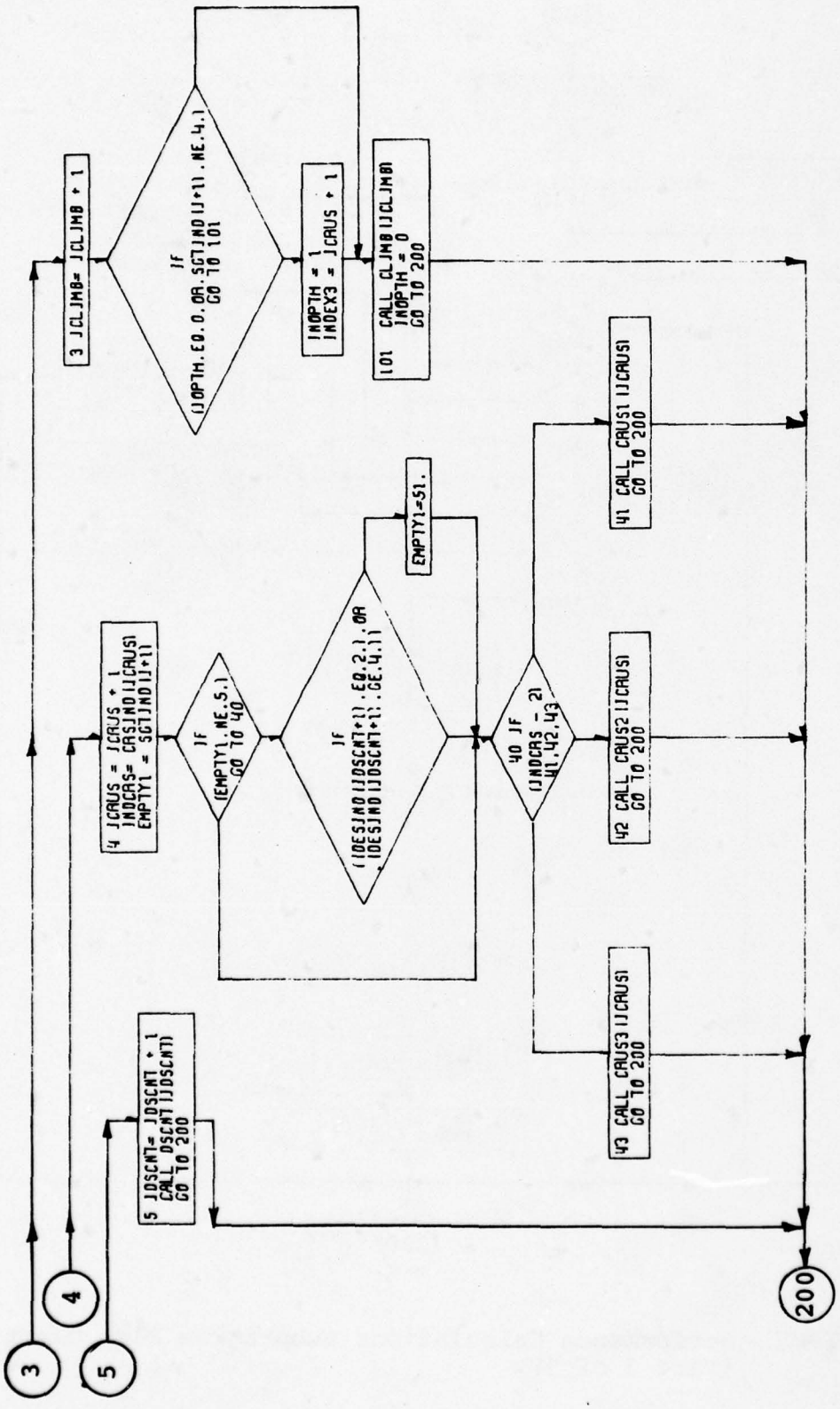

Figure 4-42. Performance Calculations Subprogram Flow Chart (Part 4 of 5).

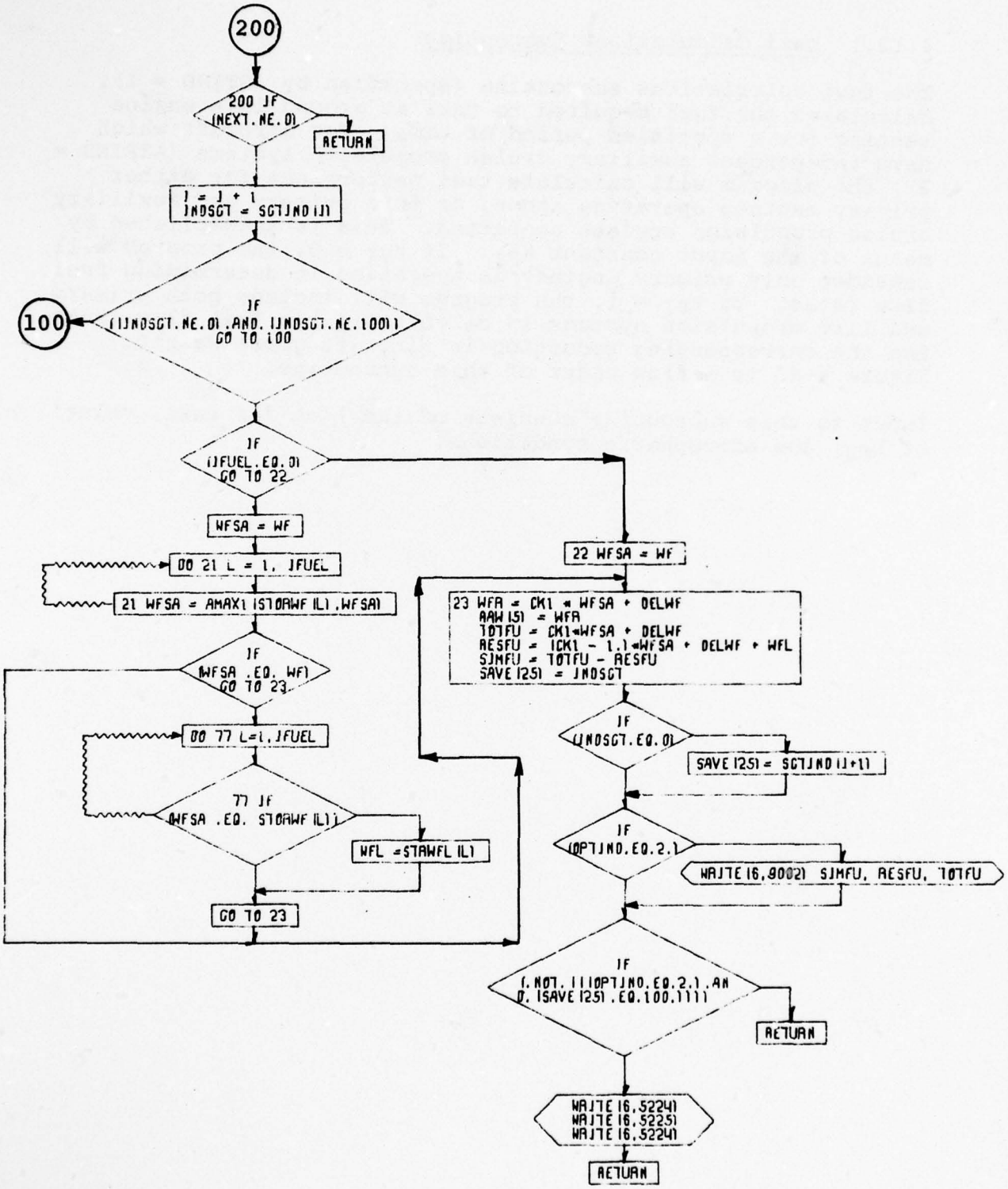

Figure 4-42. Performance Calculations Subprogram Flow Chart (Part 5 of 5).

4.12.1 Taxi Calculations Subroutine

The taxi calculations subroutine (specified by SGTIND = 1), calculates the fuel required to taxi at ground idle engine setting for a specified period of time. For aircraft which have independent auxiliary cruise propulsion systems (AIPIND = 2), the program will calculate taxi performance for either primary engines operating alone, or both primary and auxiliary cruise propulsion engines operating. This is accomplished by means of the input constant k_{FI}. If $k_{FI} = 0$, the program will consider only primary engines in operation in determining fuel flow rates. If $k_{FI} = 1$, the program will include both primary and lift propulsion systems in calculating the fuel flow rates and the corresponding reduction in aircraft gross weight. Figure 4-43 is a flow chart of this subroutine.

Input to this subroutine consists of the time for taxi, value of k_{FI}, and atmospheric conditions.

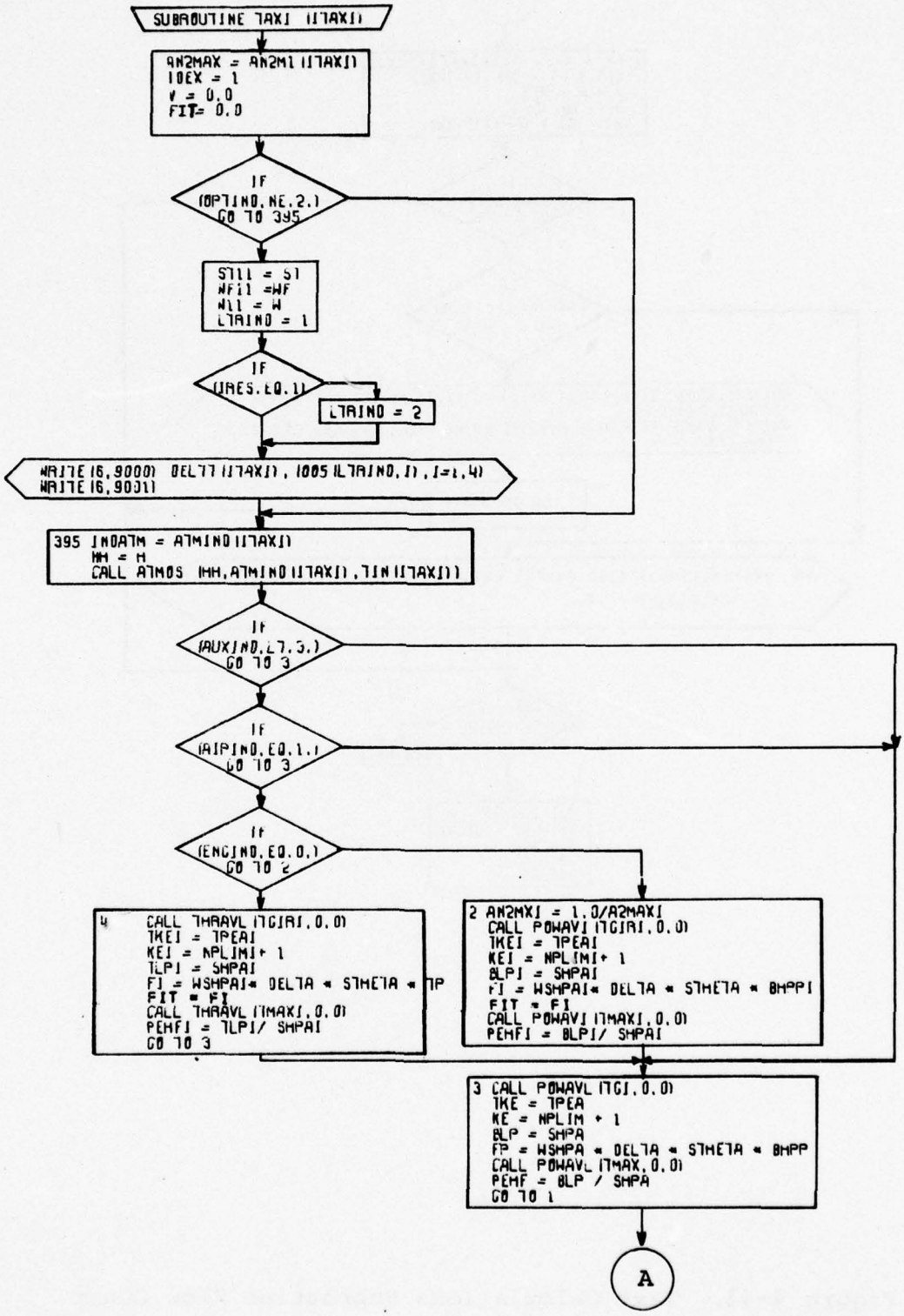

Figure 4-43. Taxi Calculations Subroutine Flow Chart (Part 1 of 2).

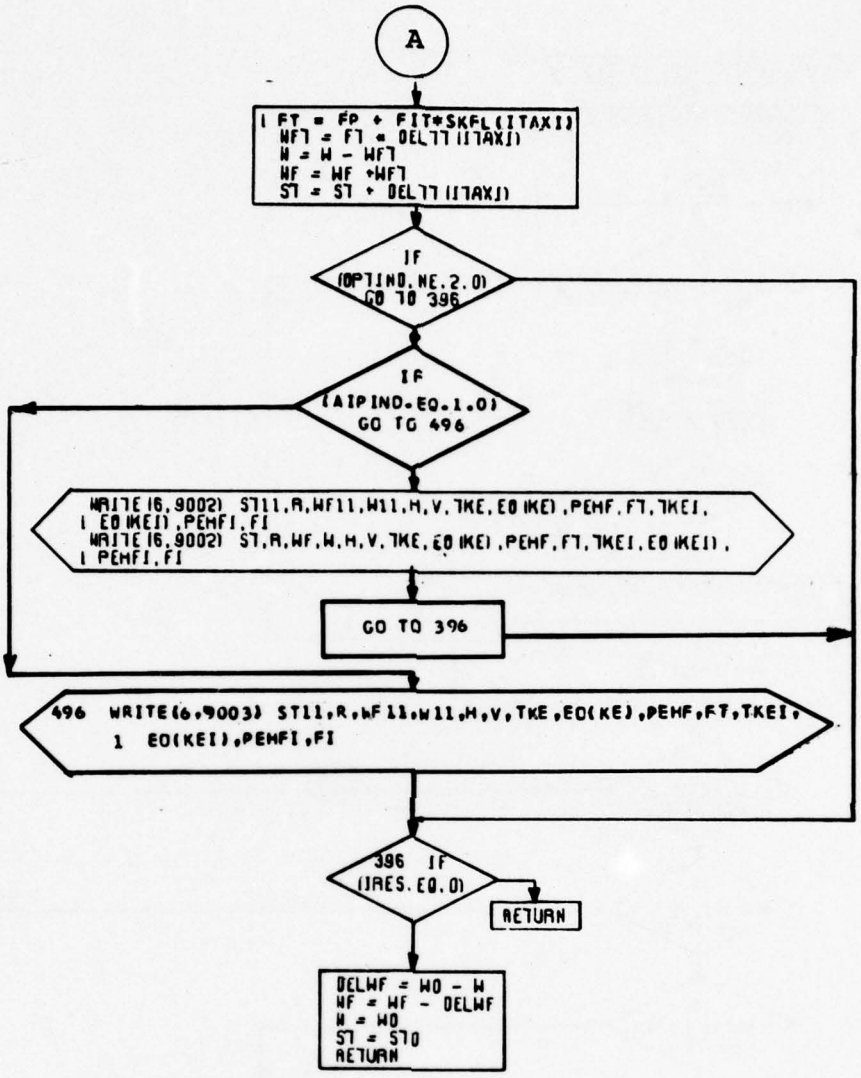

Figure 4-43. Taxi Calculations Subroutine Flow Chart (Part 2 of 2).

4.12.2 Takeoff, Hover, and Landing Calculations Subroutine

The takeoff, hover, and landing calculations subroutine (specified by SGTIND = 2) will calculate the thrust or power required and corresponding fuel flow rates during simulated takeoff/hover/landing operations. Four options are available, specified by the input indicator TOLIND:

TOLIND = 1 - Input required thrust-weight ratio and vertical rate of climb. Program will calculate required power fractions.

TOLIND = 2 - Input the required power fraction and vertical rate of climb. Program will calculate thrust-weight ratio.

TOLIND = 3 - This option is the same as TOLIND = 1, except hover in ground effect is assumed, requiring the input of height of fuselage bottom above ground as a fraction of main rotor diameter.

TOLIND = 4 - This option is the same as TOLIND = 2, except hover in ground effect is assumed, requiring the input of height of fuselage bottom above ground as a fraction of main rotor diameter.

In all cases, the program will print out the power fraction and thrust-weight ratio. The program will permit operation at power fractions greater than 1.0 (more than 100 percent of available power) in order to make it easier to perform studies in which engine power is being varied parametrically to satisfy specified takeoff or landing requirements as a site. The program will, however, print a cautionary note that power fraction exceeds 100 percent. In the case (TOHL = 2 or 4) where the required power fraction is input, if the calculated thrust-weight ratio is less than the design thrust-weight ratio input (LOC 0228), the following cautionary note will be printed: INSUFFICIENT POWER AVAILABLE TO HOVER. T/W AVAILABLE LESS THAN T/W REQUIRED AT DESIGN DOWNLOAD.

For a helicopter configuration having auxiliary independent engines, the program sets the auxiliary engine power setting at ground idle.

It is possible to use a hover segment in the mission profile to account for a reserve fuel requirement (SGTIND = 20), in such a case the helicopter weight at the end of hover is set back to the weight at the beginning of hover, or as a part of the basic mission (in this case the weight is not reset). In either case, the fuel used during hover is included in the total fuel required to size the helicopter.

Figure 4-44 is a flow chart for this subroutine.

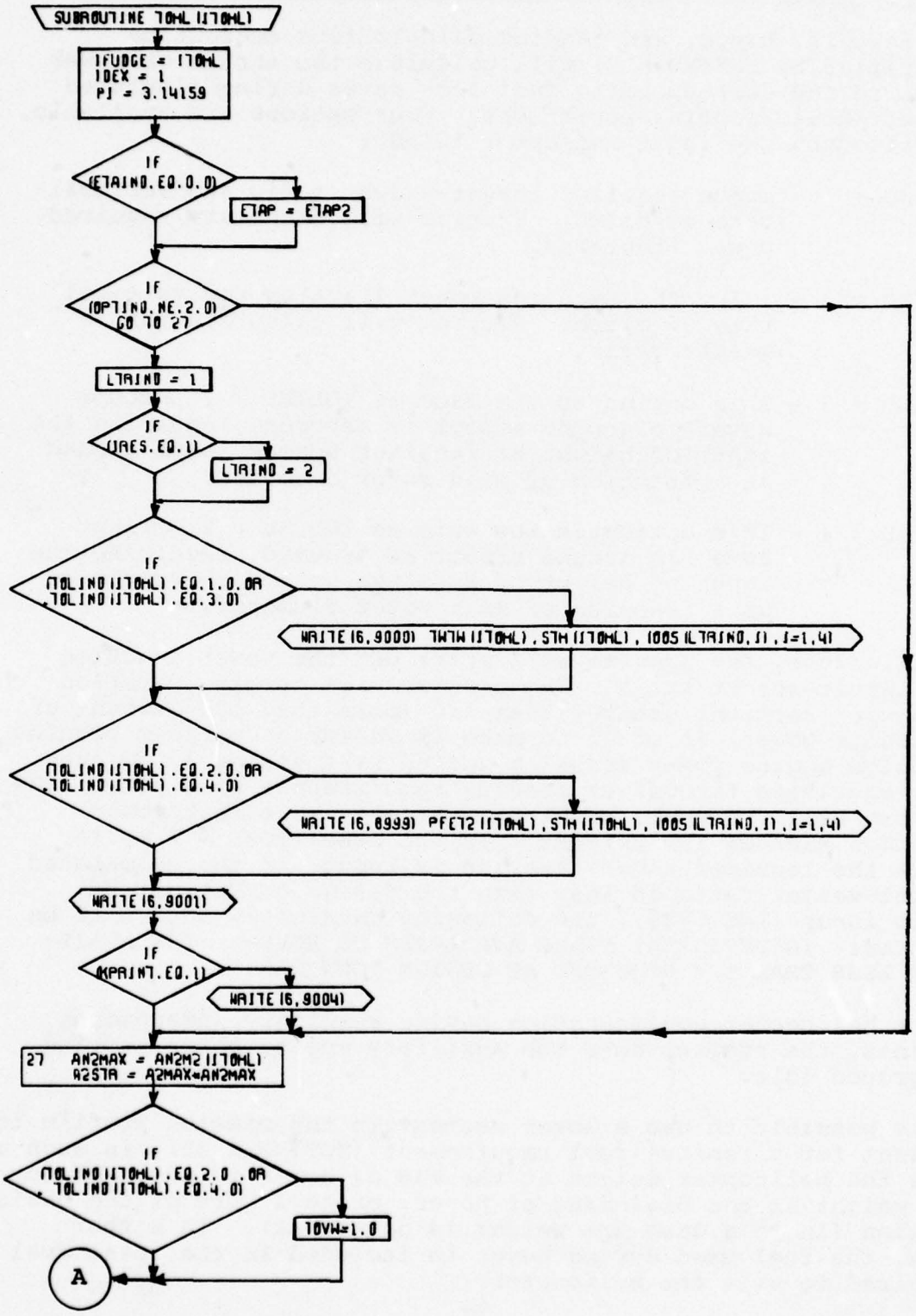

Figure 4-44. Takeoff, Hover, and Landing Subroutine Flow Chart (Part 1 of 4).

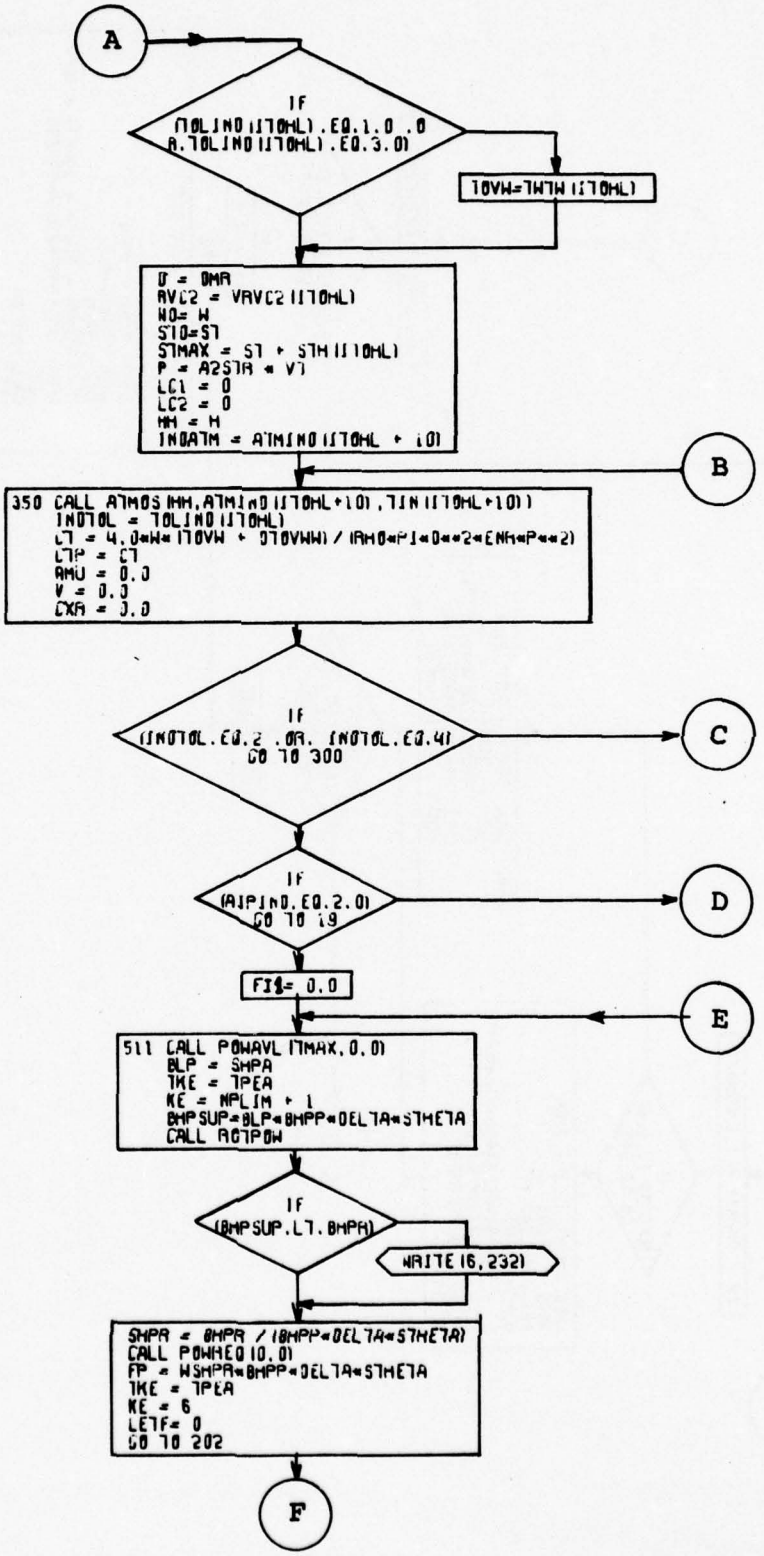

Figure 4-44. Takeoff, Hover, and Landing Subroutine Flow Chart (Part 2 of 4).

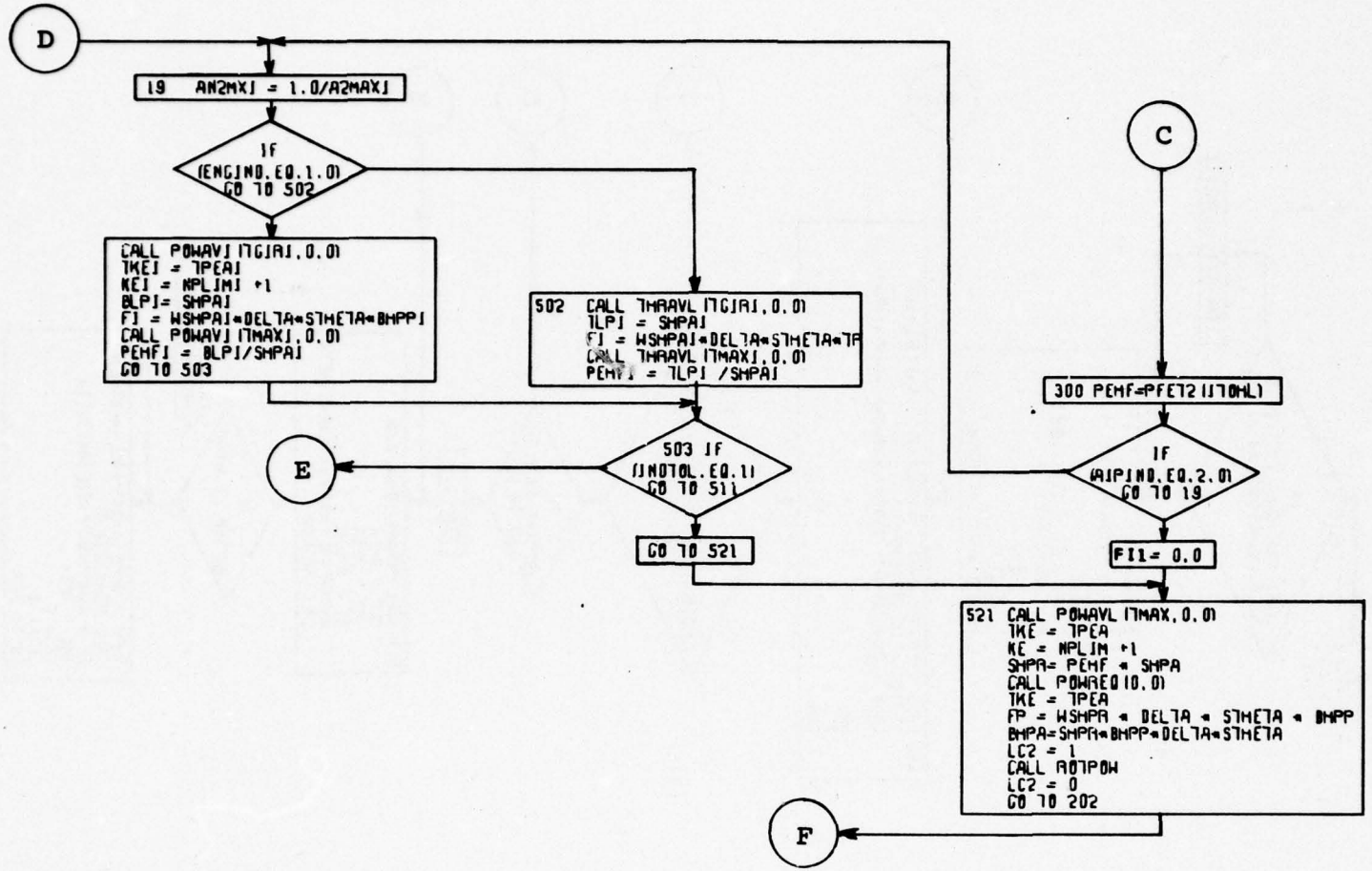

Figure 4-44. Takeoff, Hover, and Landing Subroutine Flow Chart (Part 3 of 4).

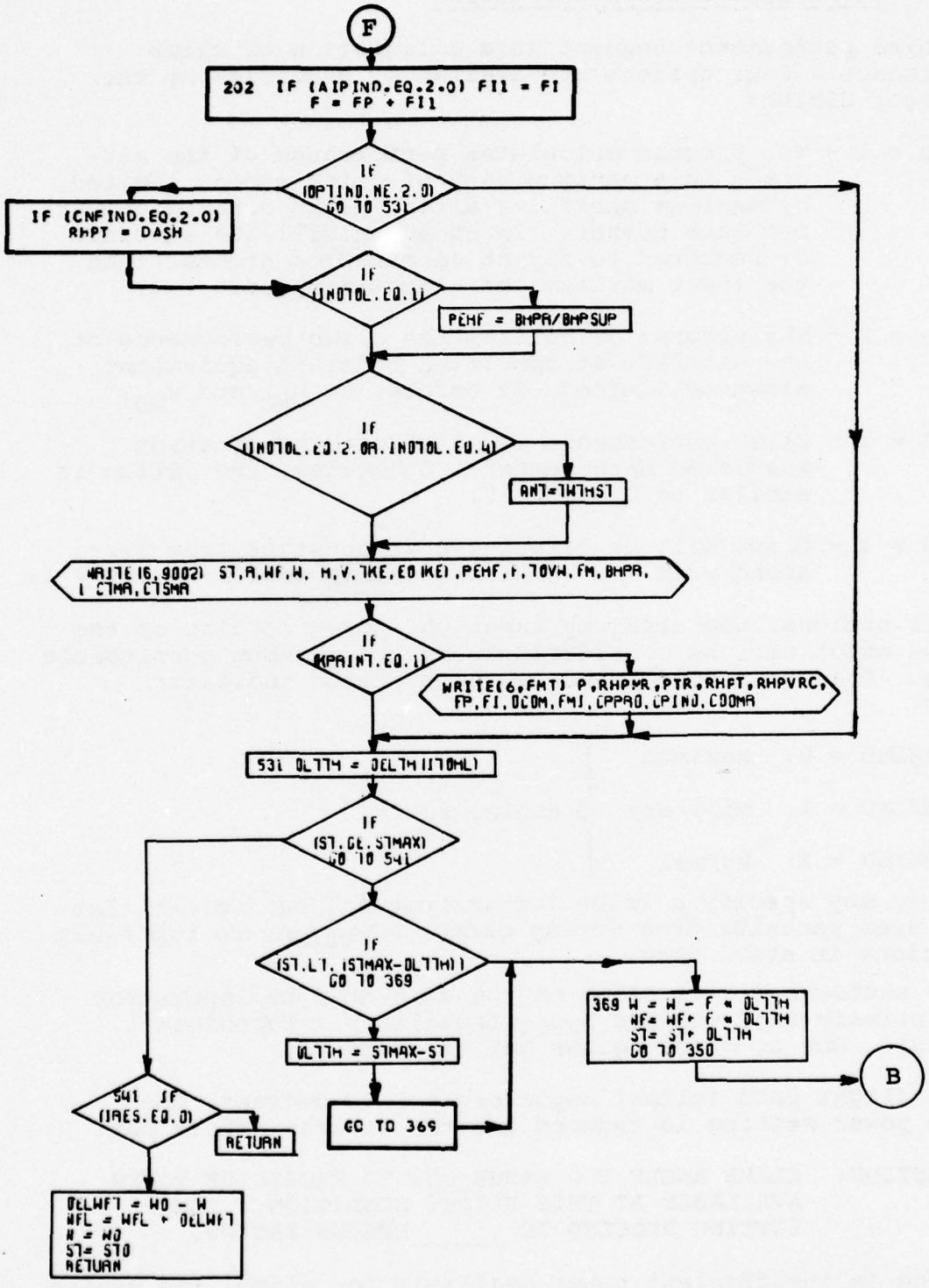

Figure 4-44. Takeoff, Hover, and Landing Subroutine Flow Chart (Part 4 of 4).

4.12.3 Climb Calculations Subroutine

The third performance segment is a calculation of climb performance. Four options are available, specified by the indicator CLMIND:

CLMIND = 1 - The program calculates performance of the aircraft in a maximum rate of climb ascent limited by maximum operating airspeed and maximum operating Mach number. In no event will the aircraft be required to fly at an airspeed greater than the input maximum operating airspeed.

CLMIND = 2 - The program calculates the climb performance of the aircraft at specified constant equivalent airspeed limited, as before, by M_{MO} and V_{MO}.

CLMIND = 3 - Climb performance is calculated at constant specified Mach number. Otherwise, the option is similar to CLMIND = 2.

CLMIND = 4 - Climb will be calculated at constant true airspeed with the same constraints as for CLMIND = 2.

For all options, the user may input the power setting of the engines which will be considered to be the maximum permissible rating. This is accomplished by means of the indicator POWIND:

POWIND = 0: Maximum
POWIND = 1: Military } engine rating
POWIND = 2: Normal

The user may specify a value for incremental equivalent flat plate area parasite drag during climb, ΔFe_{CLIMB}, to represent variations in store drag.

Engine shutdown during climb may be simulated by inputs for N_{PSD} (primary engines) and N_{PSDI} (auxiliary independent engines). One or more engines may be shutdown.

If the flight path (climb) angle exceeds 90 degrees, the engine power setting is reduced and the program prints out:

CAUTION: CLIMB ANGLE TOO LARGE DUE TO EXCESSIVE POWER AVAILABLE AT THIS FLIGHT CONDITION. POWER SETTING REDUCED TO _____ ENGINE RATING.

If there is insufficient power available for climb, the engine power setting is increased and the program prints out:

CAUTION: INSUFFICIENT POWER AVAILABLE FOR CLIMB AT THIS FLIGHT CONDITION. POWER SETTING INCREASED TO _____ ENGINE RATING.

The input h_{max} has two applications. If h_{OPTIND} = 1 (optimum altitude search) and the climb is followed by a cruise, the input value of h_{max} will be interpreted as the maximum flight altitude for the following cruise. If the optimum cruise altitude is determined by the program to be at an altitude less than h_{max}, the climb will terminate at the lower altitude. If an optimum altitude search is not being used or if the following segment is other than a cruise, the input h_{max} is interpreted as the final altitude for the climb segment.

It is possible to use a climb segment in the mission profile to account for a reserve fuel requirement (SGTIND = 30) (in such a case the helicopter weight at the end of climb is set back to the weight at the beginning of climb) or as a part of the basic mission (in this case the weight is not reset). In either case, the fuel used during climb is included in the total fuel required to size the helicopter.

Figure 4-45 is a flow chart for this subroutine.

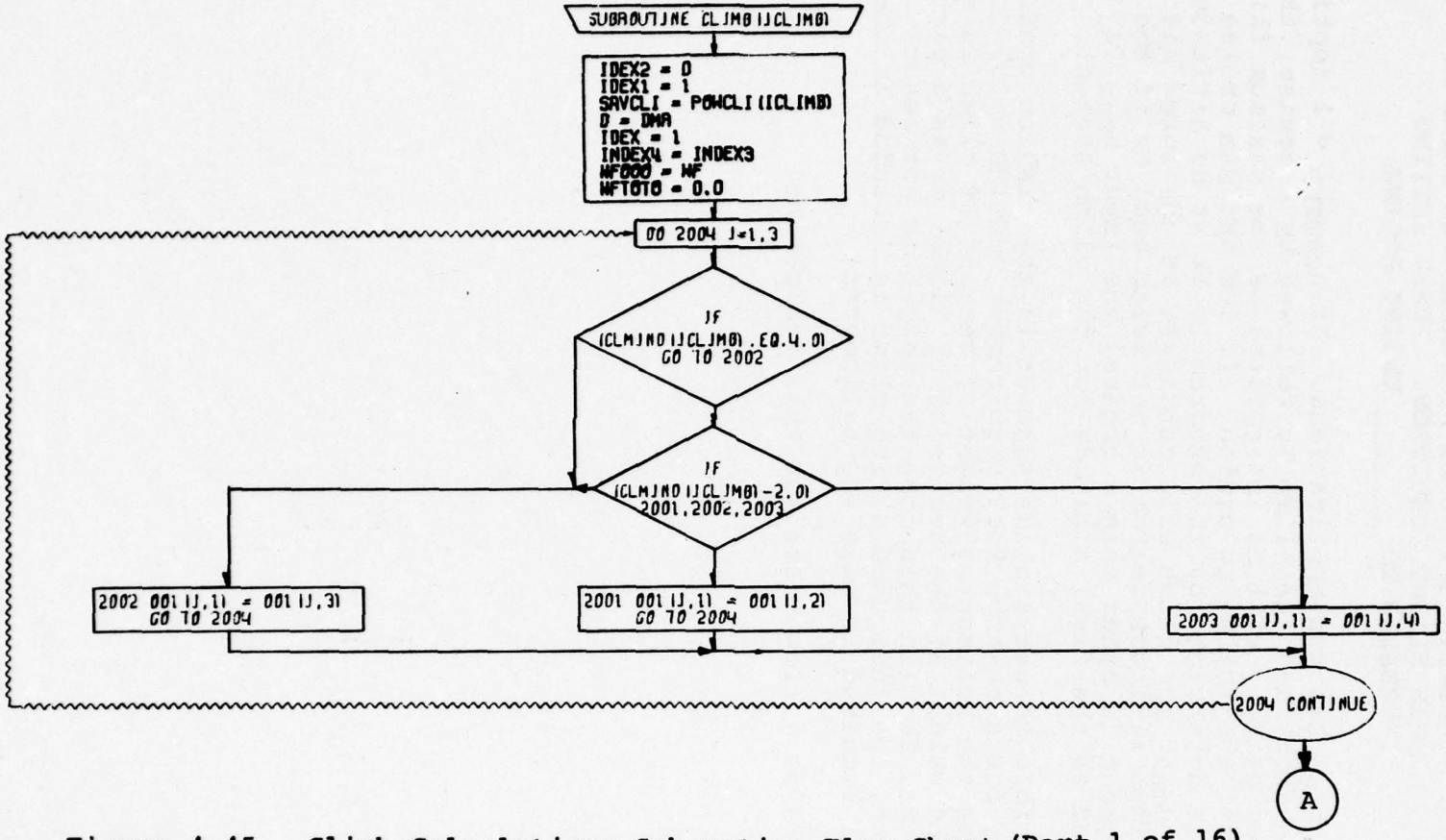

Figure 4-45. Climb Calculations Subroutine Flow Chart (Part 1 of 16).

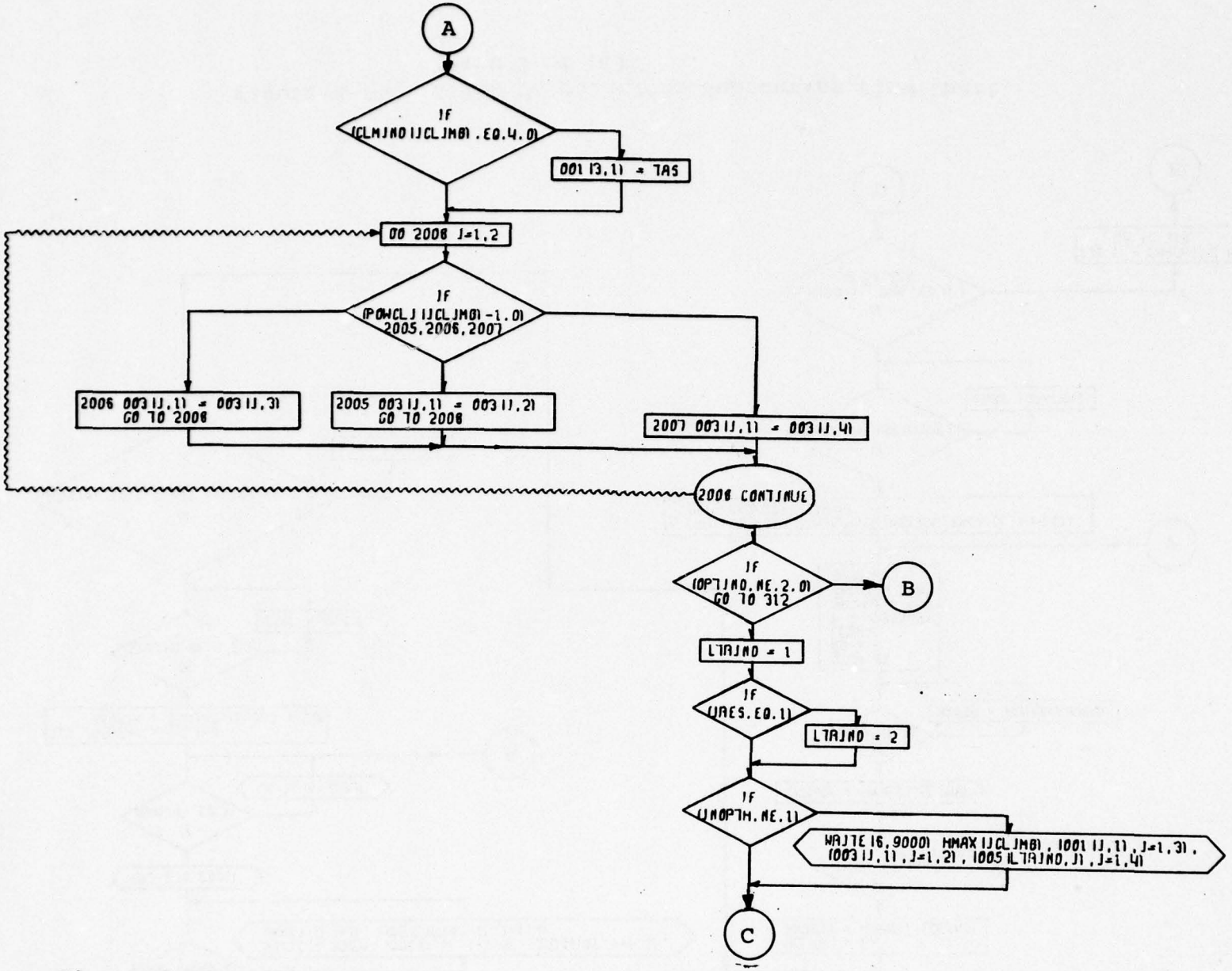

Figure 4-45. Climb Calculations Subroutine Flow Chart (Part 2 of 16).

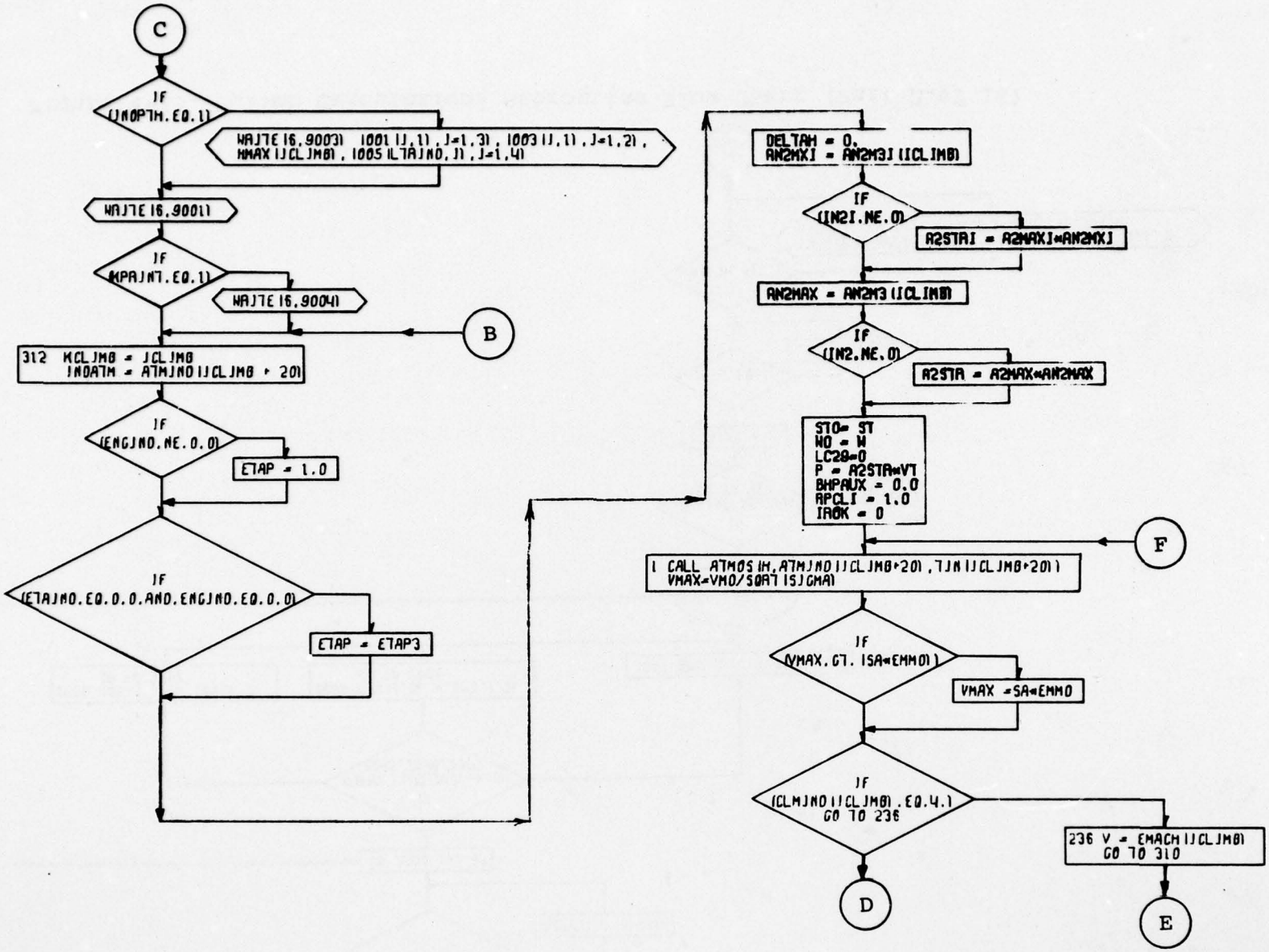

Figure 4-45. Climb Calculations Subroutine Flow Chart (Part 3 of 16).

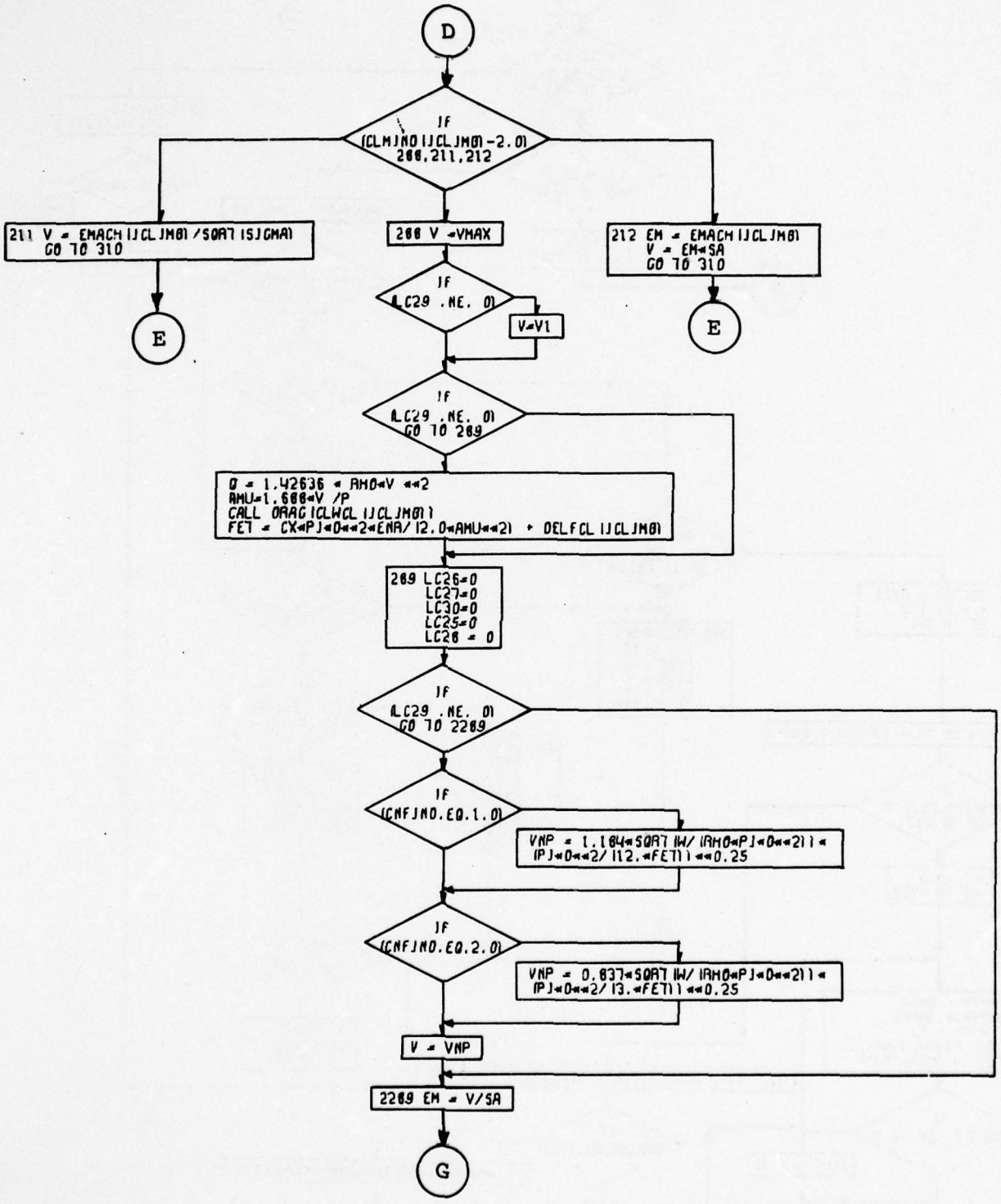

Figure 4-45. Climb Calculations Subroutine Flow Chart (Part 4 of 16).

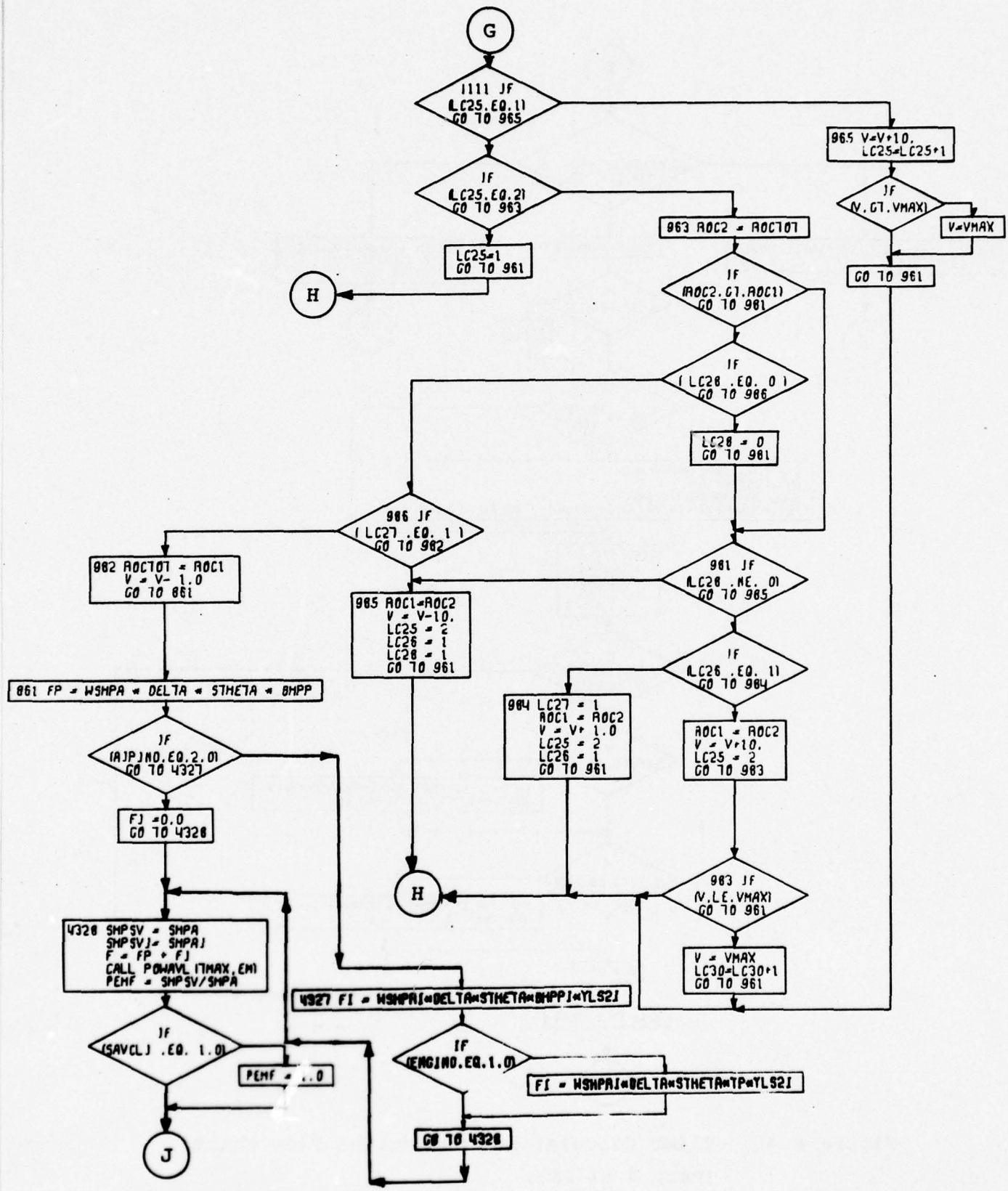

Figure 4-45. Climb Calculations Subroutine Flow Chart (Part 5 of 16).

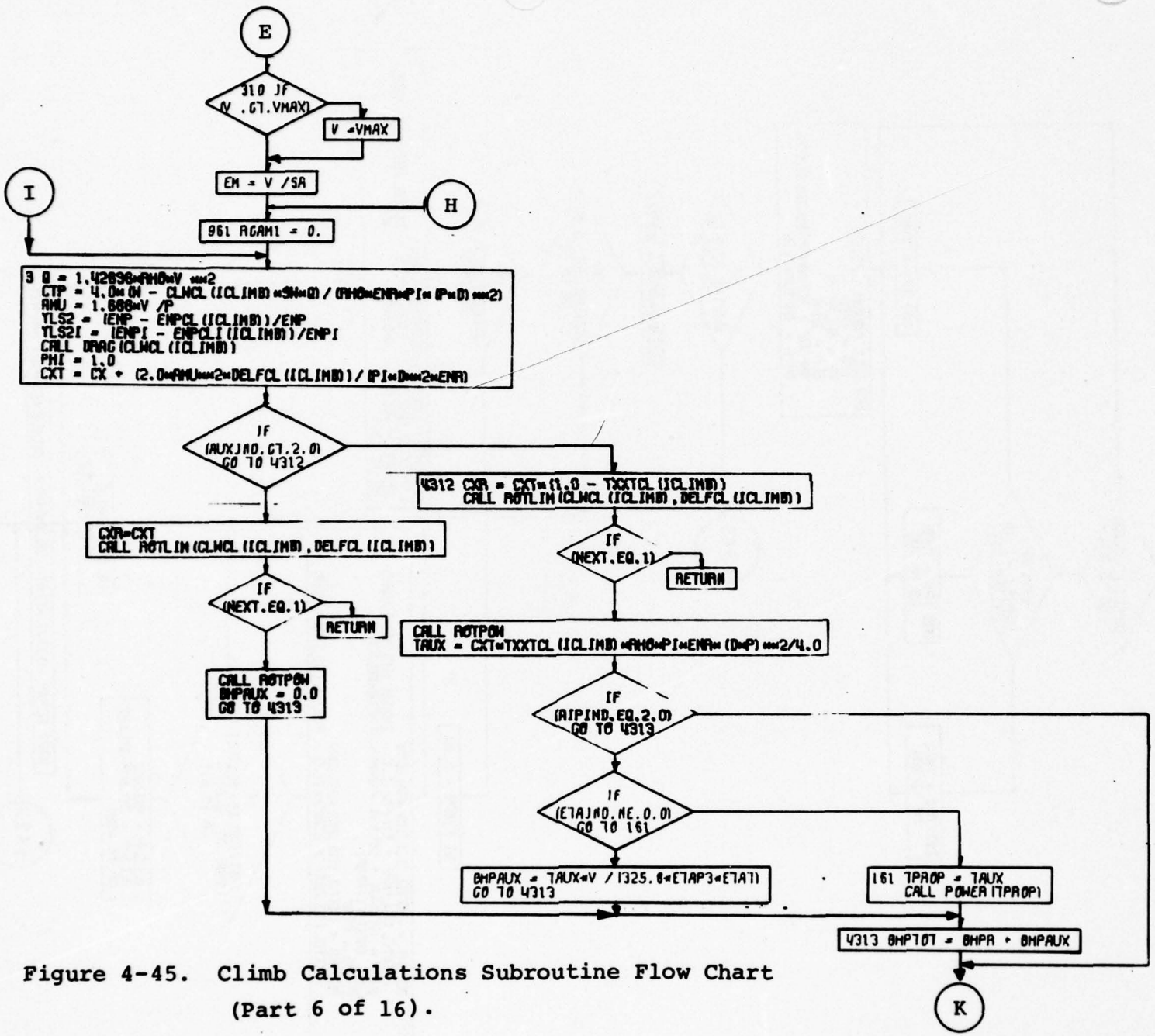

Figure 4-45. Climb Calculations Subroutine Flow Chart (Part 6 of 16).

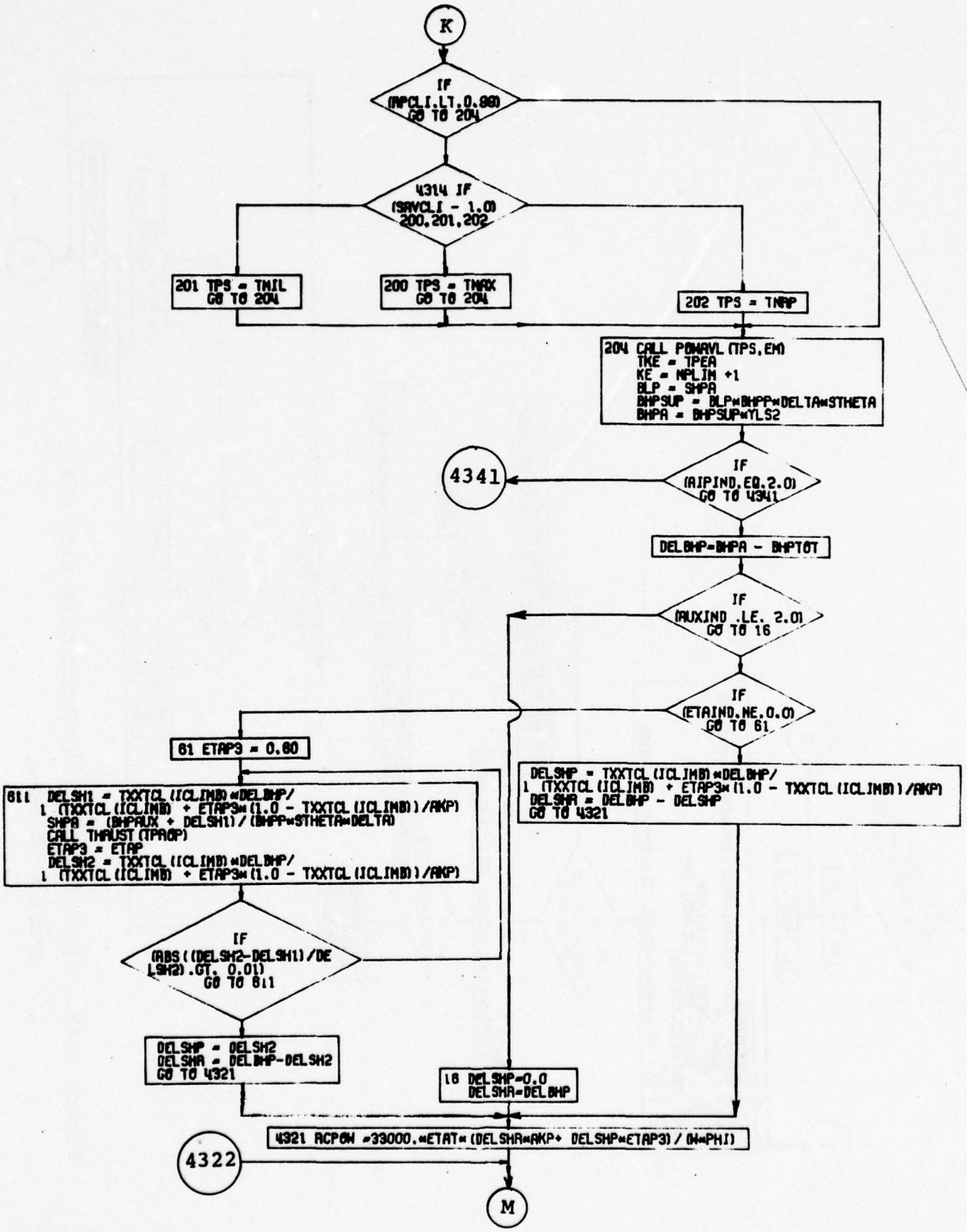

Figure 4-45. Climb Calculations Subroutine Flow Chart (Part 7 of 16).

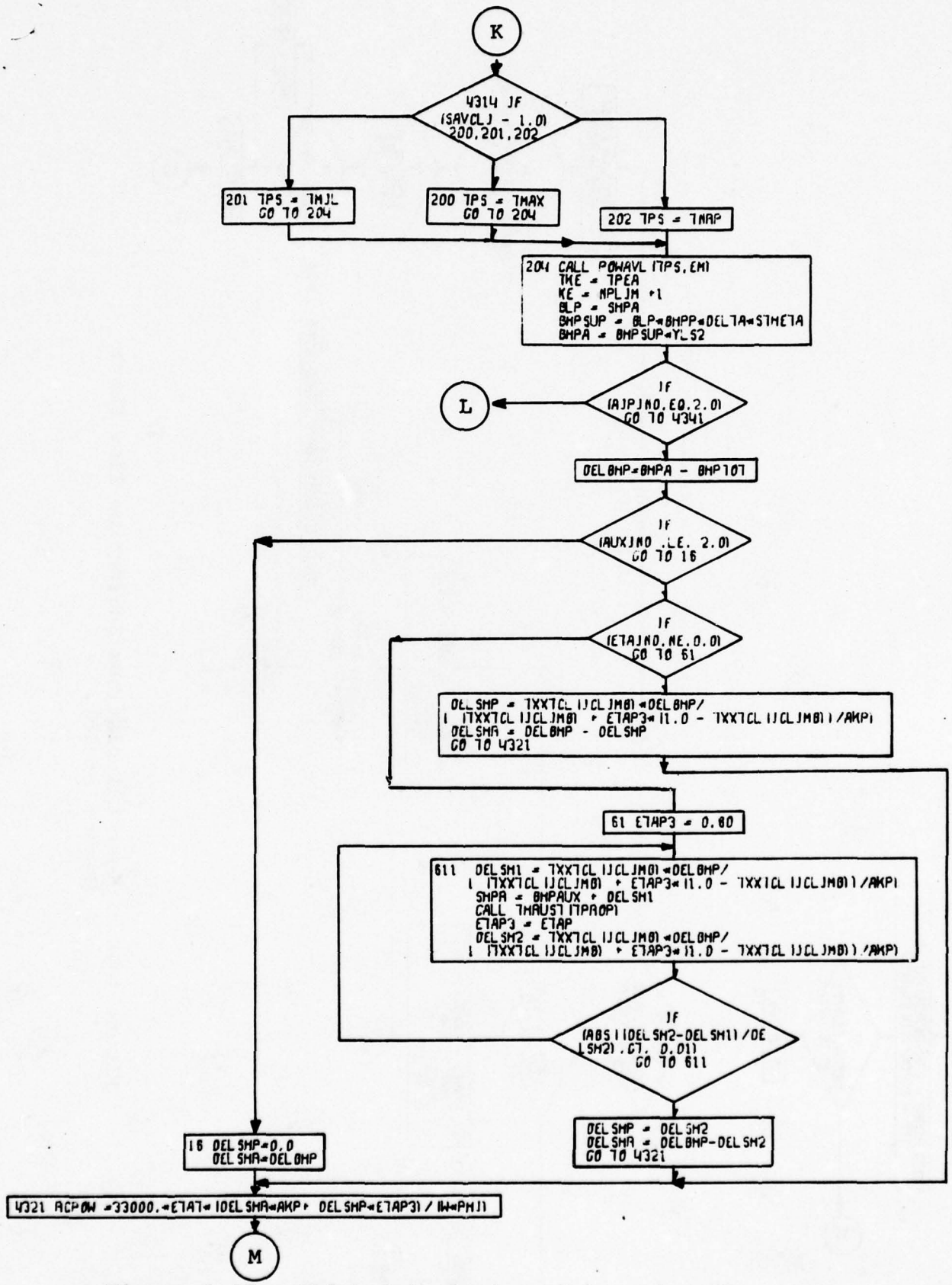

Figure 4-45. Climb Calculations Subroutine Flow Chart (Part 8 of 16).

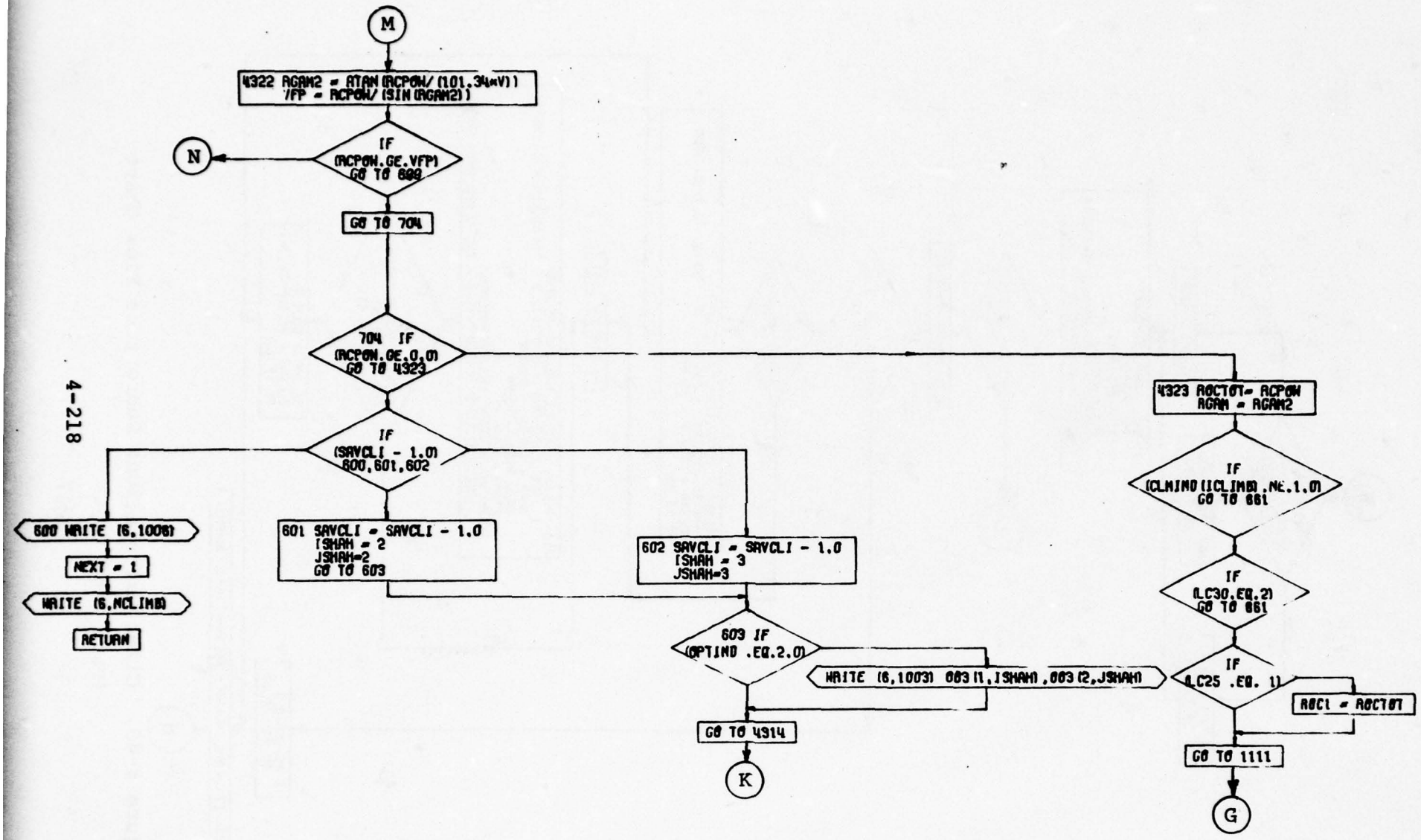

Figure 4-45. Climb Calculations Subroutine Flow Chart (Part 9 of 16).

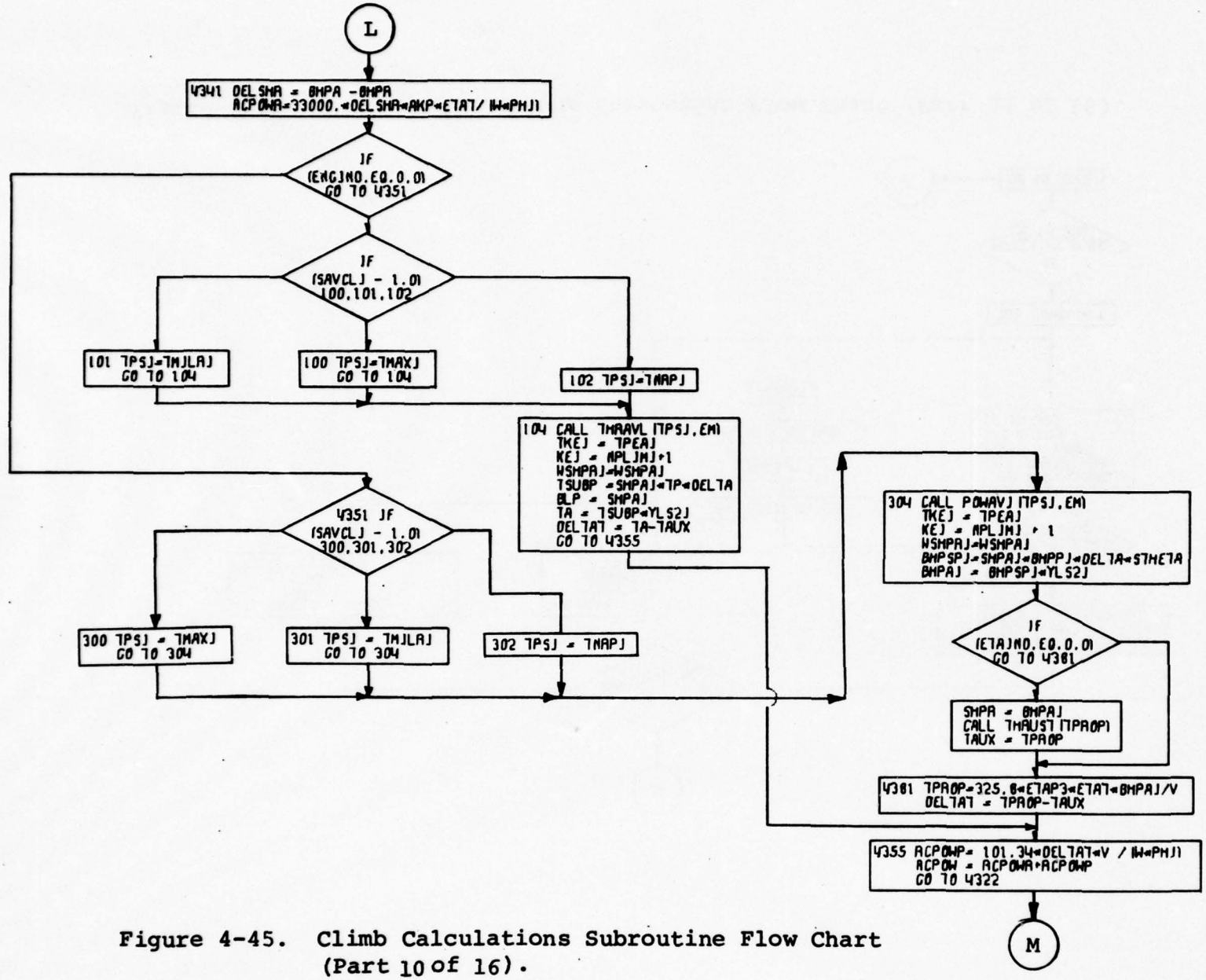

Figure 4-45. Climb Calculations Subroutine Flow Chart (Part 10 of 16).

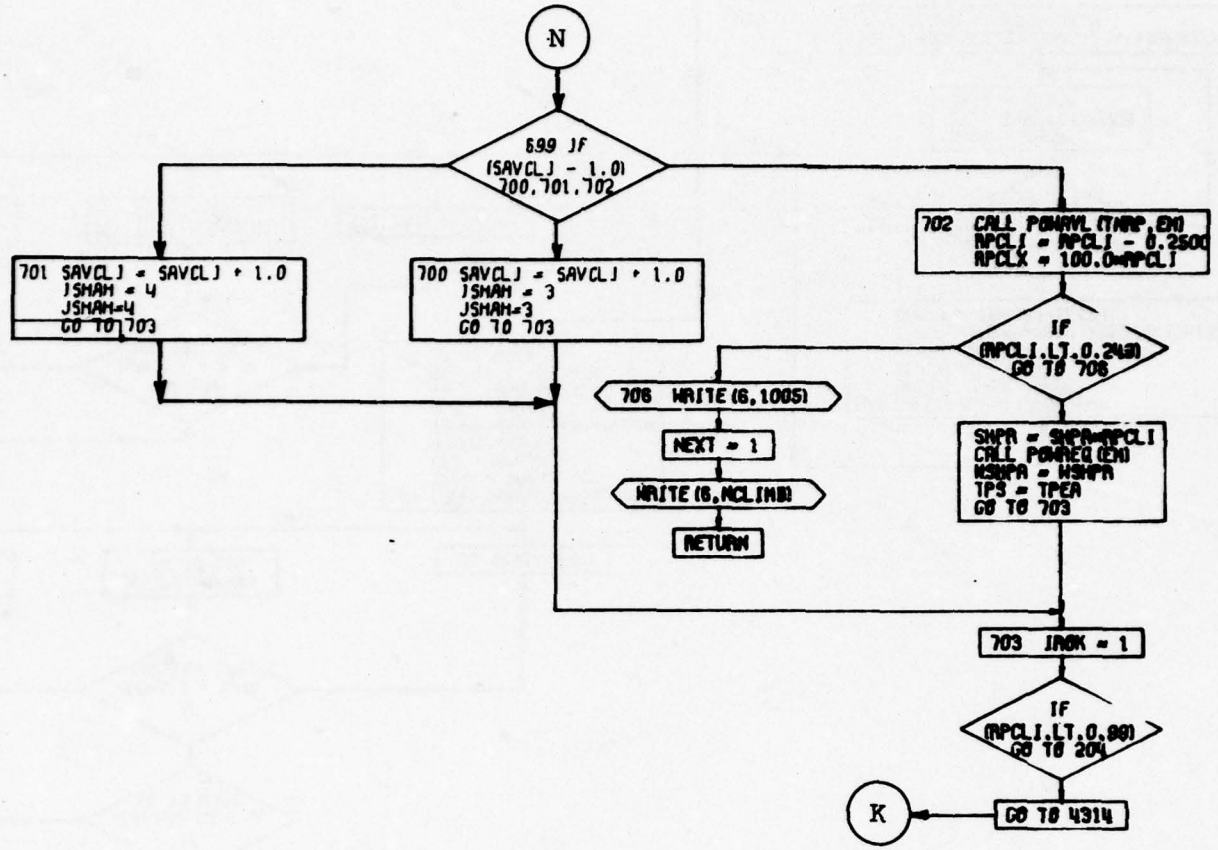

Figure 4-45. Climb Calculations Subroutine Flow Chart (Part 11 of 16).

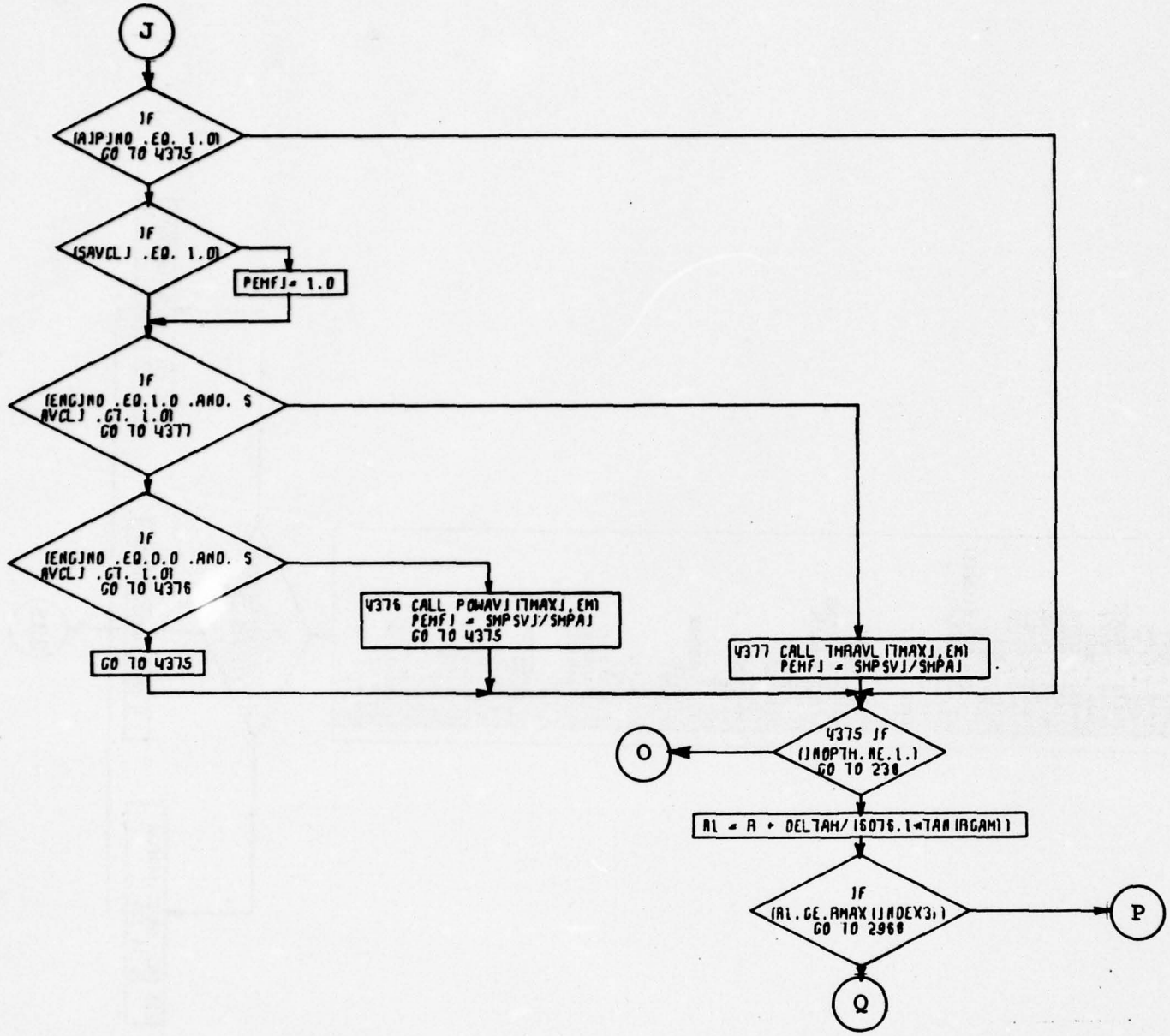

Figure 4-45. Climb Calculations Subroutine Flow Chart (Part 12 of 16).

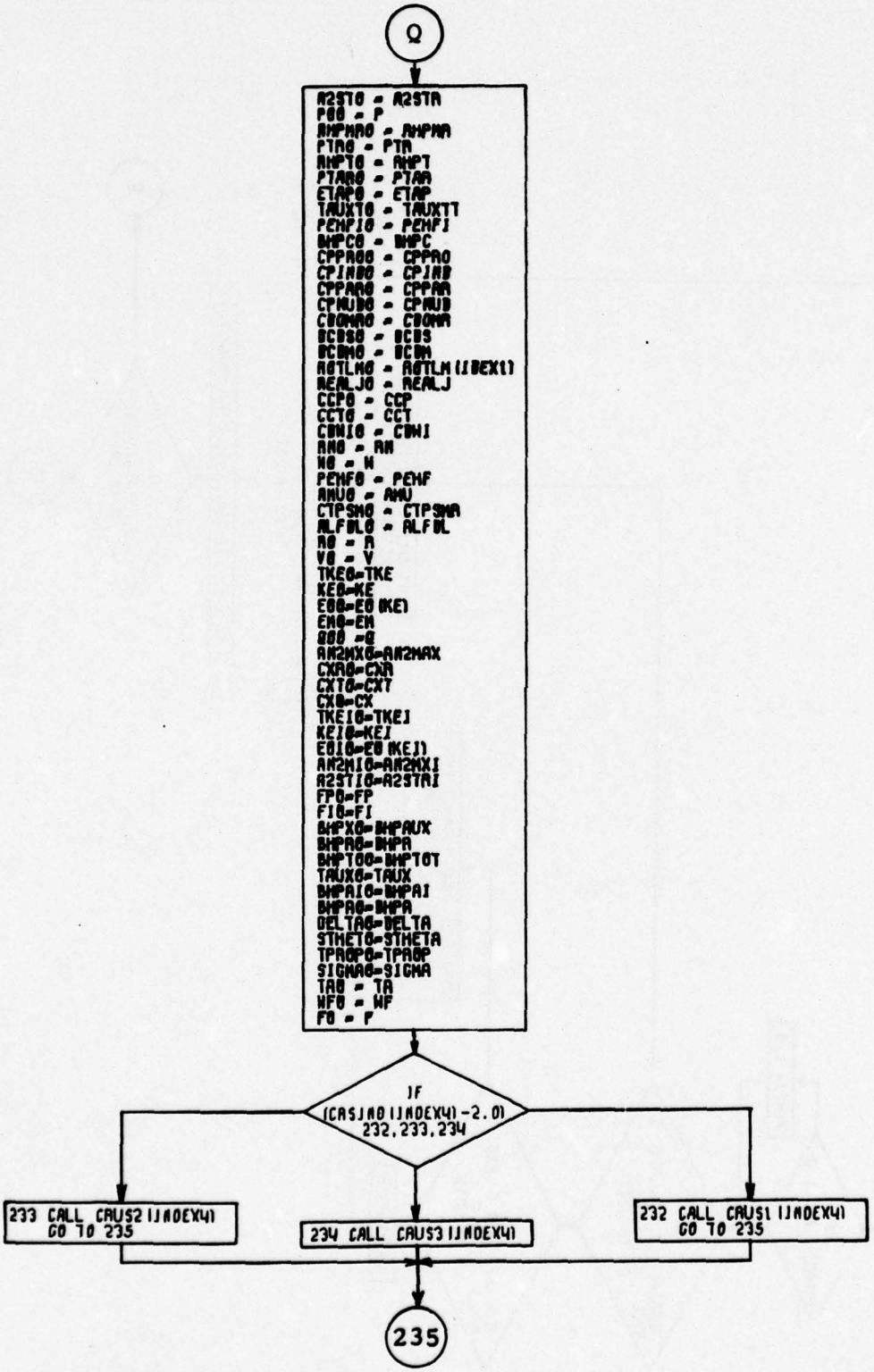

Figure 4-45. Climb Calculations Subroutine Flow Chart (Part 13 of 16).

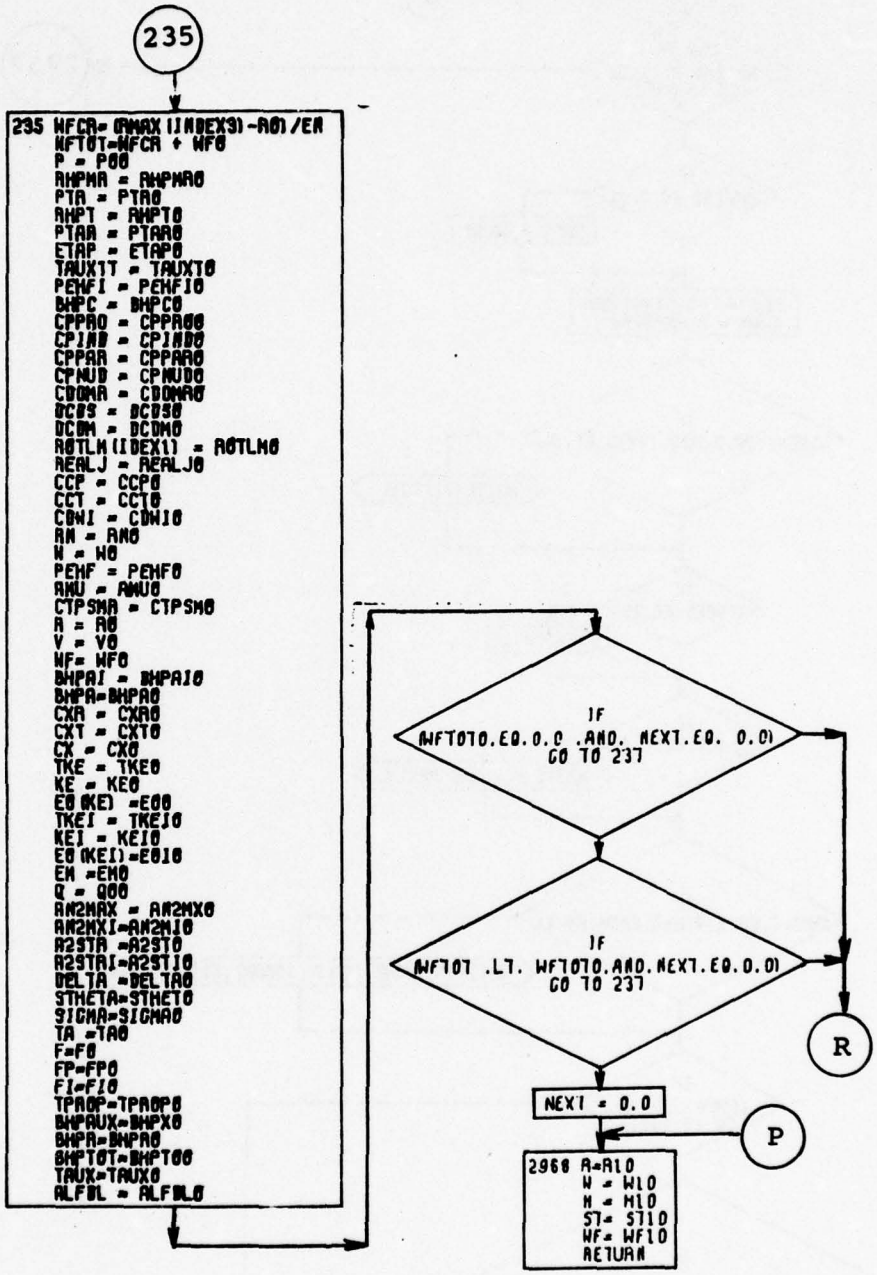

Figure 4-45. Climb Calculations Subroutine Flow Chart (Part 14 of 16).

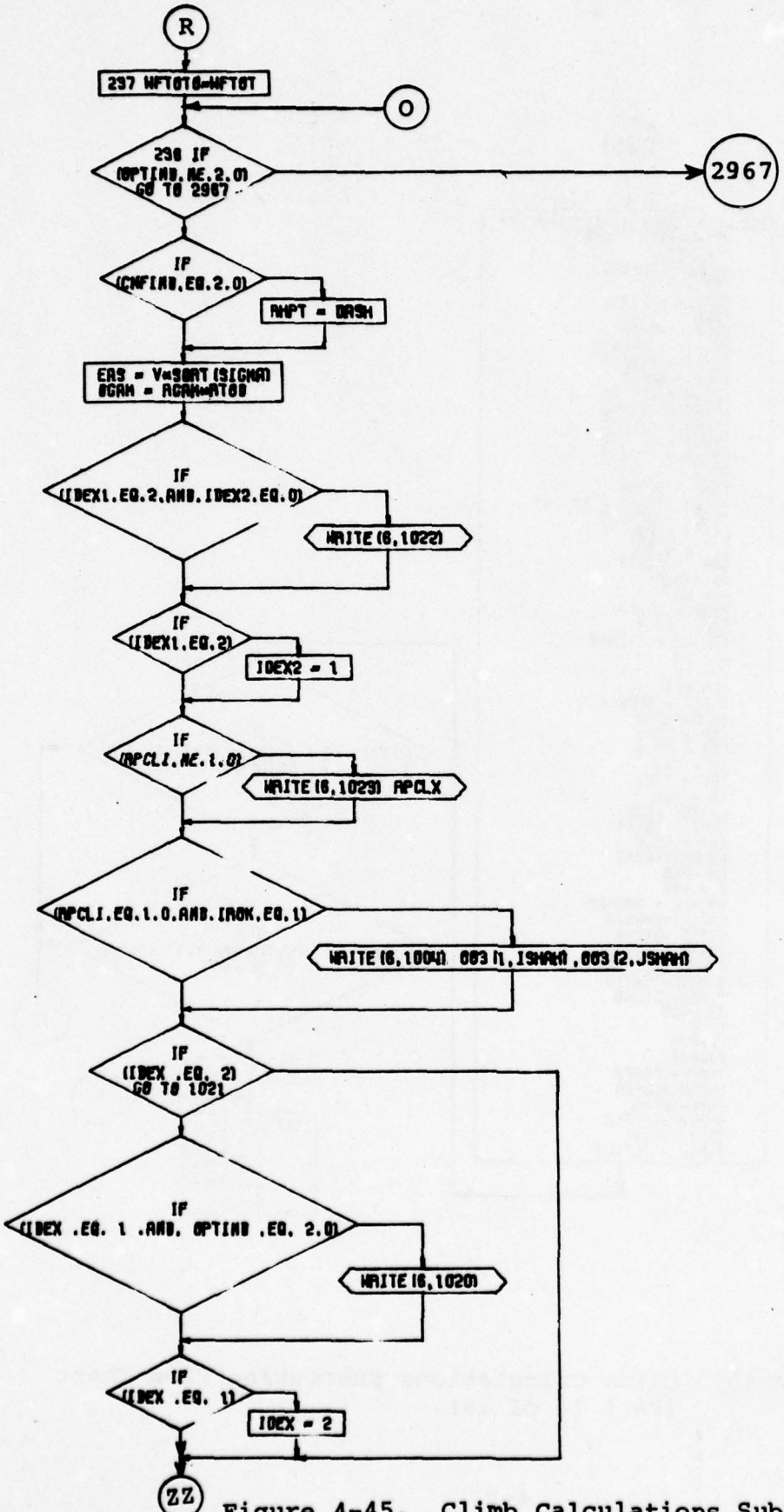

Figure 4-45. Climb Calculations Subroutine Flow Chart (Part 15 of 16).

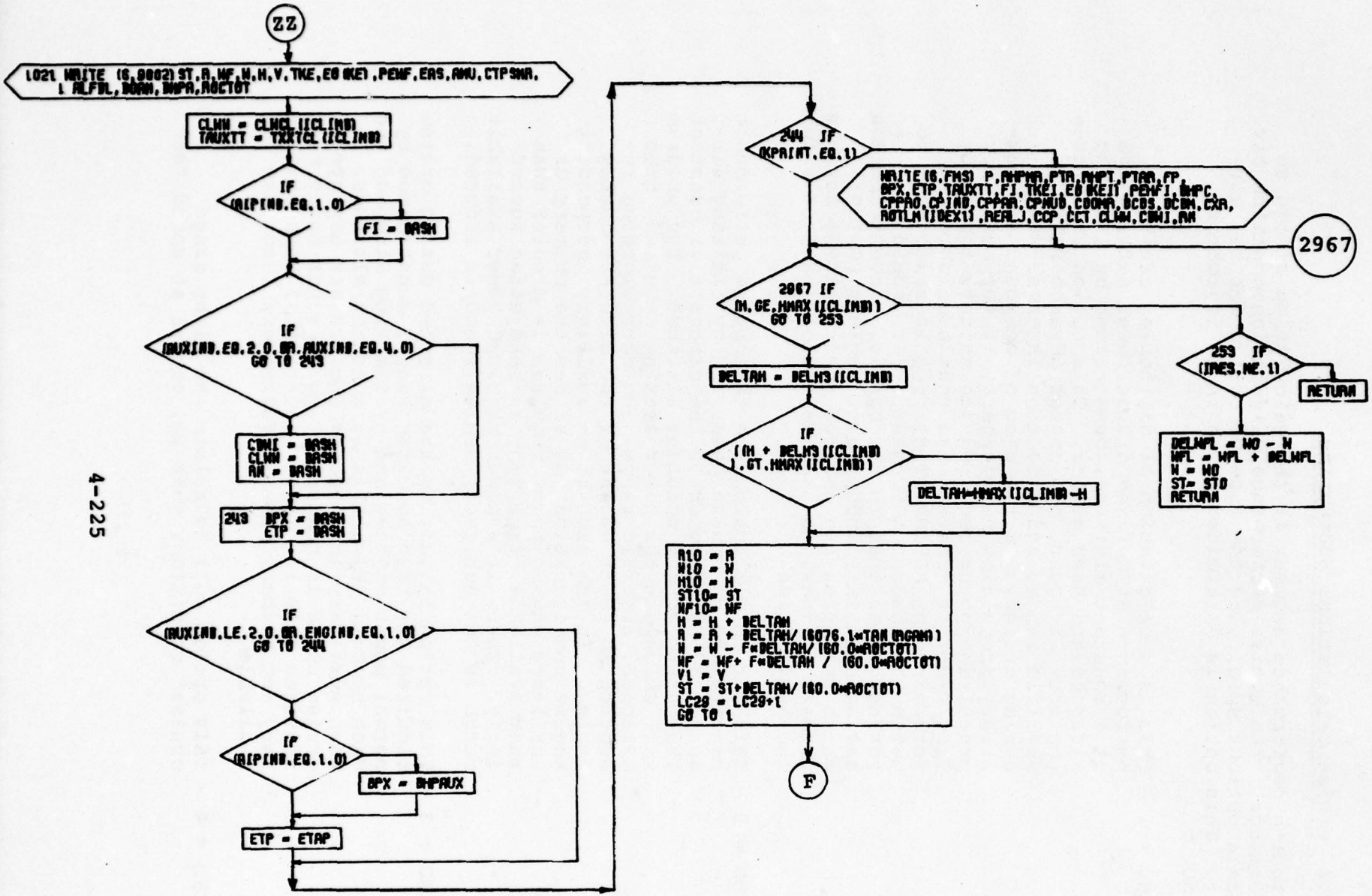

Figure 4-45. Climb Calculations Subroutine Flow Chart (Part 16 of 16).

4.12.4 Cruise Calculations Subroutine

The fourth performance segment is the calculation of cruise performance. The cruise performance calculation contains six separate options specifying the type of cruise for the aircraft. This option is determined by an input idnicator, CRSIND.

CRSIND = 1 - This is a calculation of helicopter cruise performance at a fixed cruise power setting and at a constant altitude, constrained by limiting airspeed and Mach number. This option calculates the true airspeed, helicopter advance ratio, specific range, and reduction in gross weight during cruise. In the case of compound and auxiliary propulsion helicopters, if the auxiliary propulsion power required (to satisfy the input T_{AUX}/T_{TOT}) is greater than that available, as determined by POWIND, T_{AUX}/T_{TOT} is readjusted to match the power requirements. It should be further noted that in the case of a configuration having auxiliary independent engines POWIND, which specifies the desired power setting for the primary engines, is used as a limiting factor for the auxiliaries.

CRSIND = 2 - This option will calculate the cruise performance constrained by cruise power and by limiting airspeed and Mach number of the aircraft at constant true airspeed and constant altitude. The program will calculate the power setting required, true airspeed, specific range, and corresponding reduction in gross weight of the aircraft during cruise. In the case of an auxiliary independent engine configuration, if either the primary or auxiliary engine power required is greater than that available, T_{AUX}/T_{TOT} is readjusted accordingly. Then, if a power required-power available match is not achieved, cruise speed is reduced.

CRSIND = 3 - This option calculates the airspeed during cruise required for best specific range, constrained by normal power setting and by limiting airspeed and Mach number. Flight is at constant altitude. When auxiliary independent engines are employed, cruise speed is reduced (T_{AUX}/T_{TOT} not being readjusted from its input value) until both auxiliary and primary power required are less than available.

CRSIND = 4 - This option will calculate the "long range cruise" condition; that is, cruise at speed for

99% of best specific range. Flight is constrained by normal power setting, limiting airspeed and Mach number and is at constant altitude.

CRSIND = 5 - This option is a calculation for a cruise-climb at a constant value of W/δ (airplane weight to ambient pressure ratio). The airspeed will be the speed for best specific range.

CRSIND = 6 - This is a calculation for a cruise climb (constant W/δ) at the speed for 99% of best specific range.

Cruise power setting as discussed above is defined by user input to be maximum (POWIND = 0), military (POWIND = 1), or normal (POWIND = 2) engine rating. This subroutine permits simulation of cruise performance of an aircraft with an arbitrary number of engines (both primary and auxiliary) shut down.

The program user specifies the number of engines shut down and a corresponding increment in airplane equivalent flat plate area drag.

The user may also specify a desired value of headwind when CRSIND = 3 through 6.

It is possible to use a cruise segment in the mission profile to account for a reserve fuel requirement (SGTIND = 40) (in such a case the helicopter weight at the end of cruise is set back to the weight at the beginning of cruise) or as a part of the basic mission (in this case the weight is not reset). In either case, the fuel used during cruise is included in the total fuel required to size the helicopter.

The input for the subroutine consists of the final range for cruise, the step size (incremental range), number of engines shut down, increment in drag coefficient, atmospheric conditions, required true airspeed (if CRSIND = 2) the headwind (if CRSIND = 3, 4, 5, or 6) and the settings for CRSIND and POWIND. Figure 4-46 is a flow chart of this subroutine.

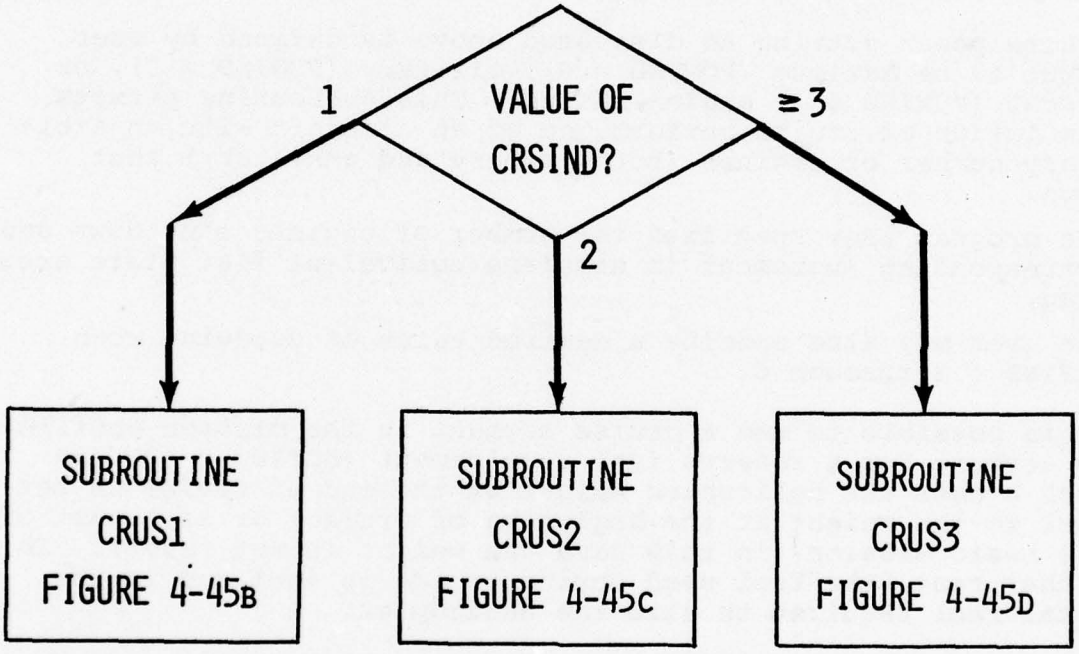

Figure 4-46a. Cruise Calculations Subroutine.

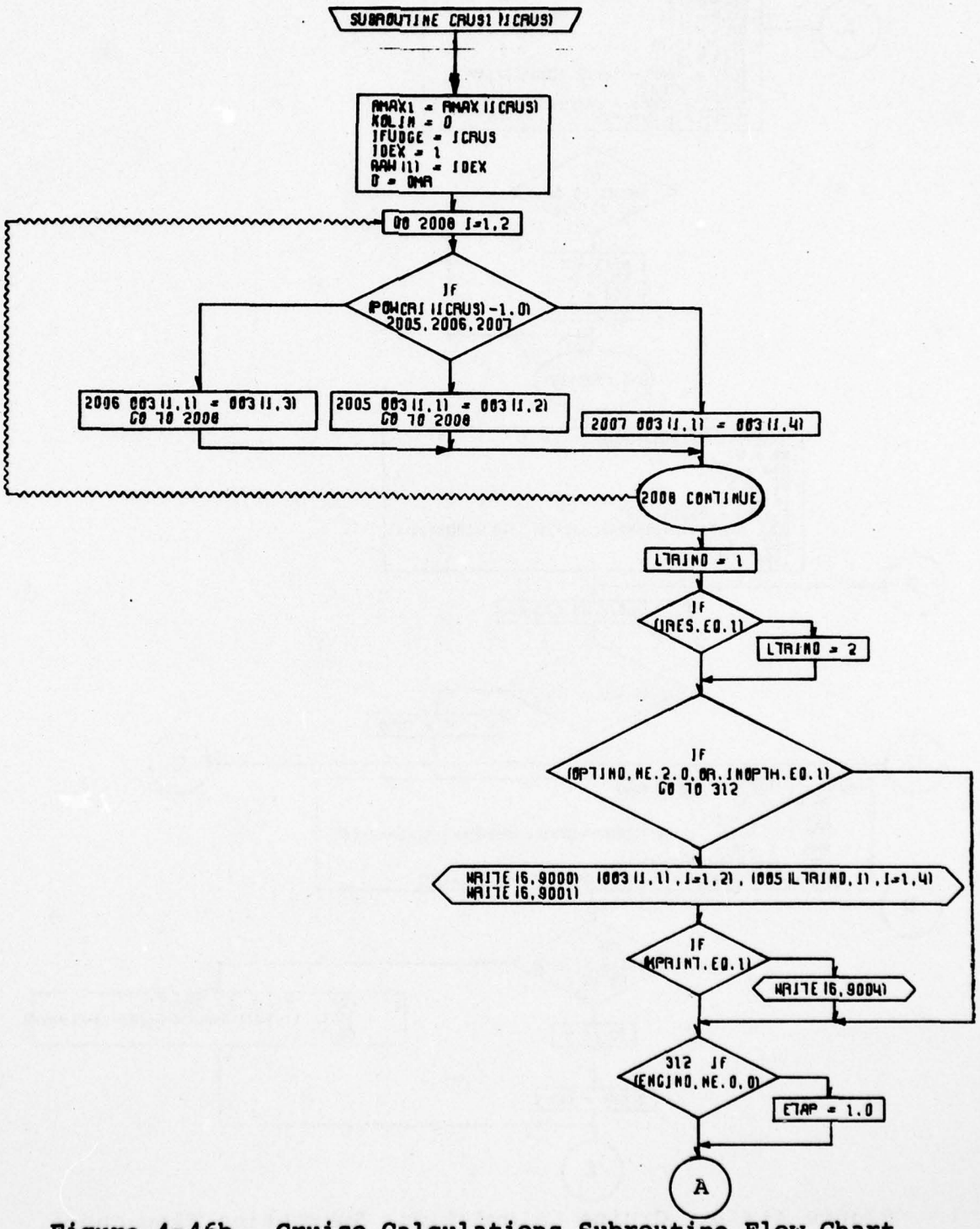

Figure 4-46b. Cruise Calculations Subroutine Flow Chart (Part 1 of 8).

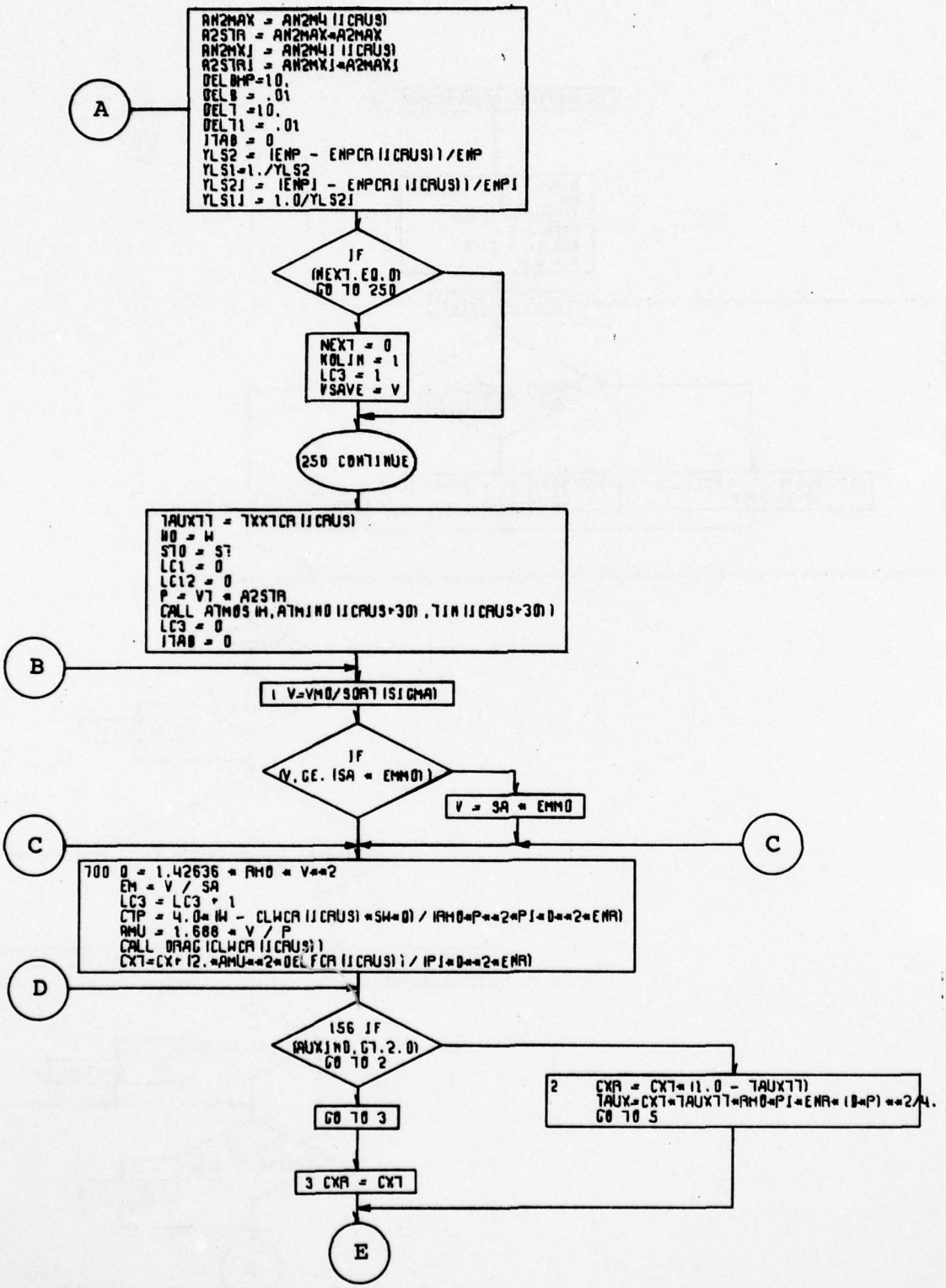

Figure 4-46b. Cruise Calculations Subroutine Flow Chart (Part 2 of 8).

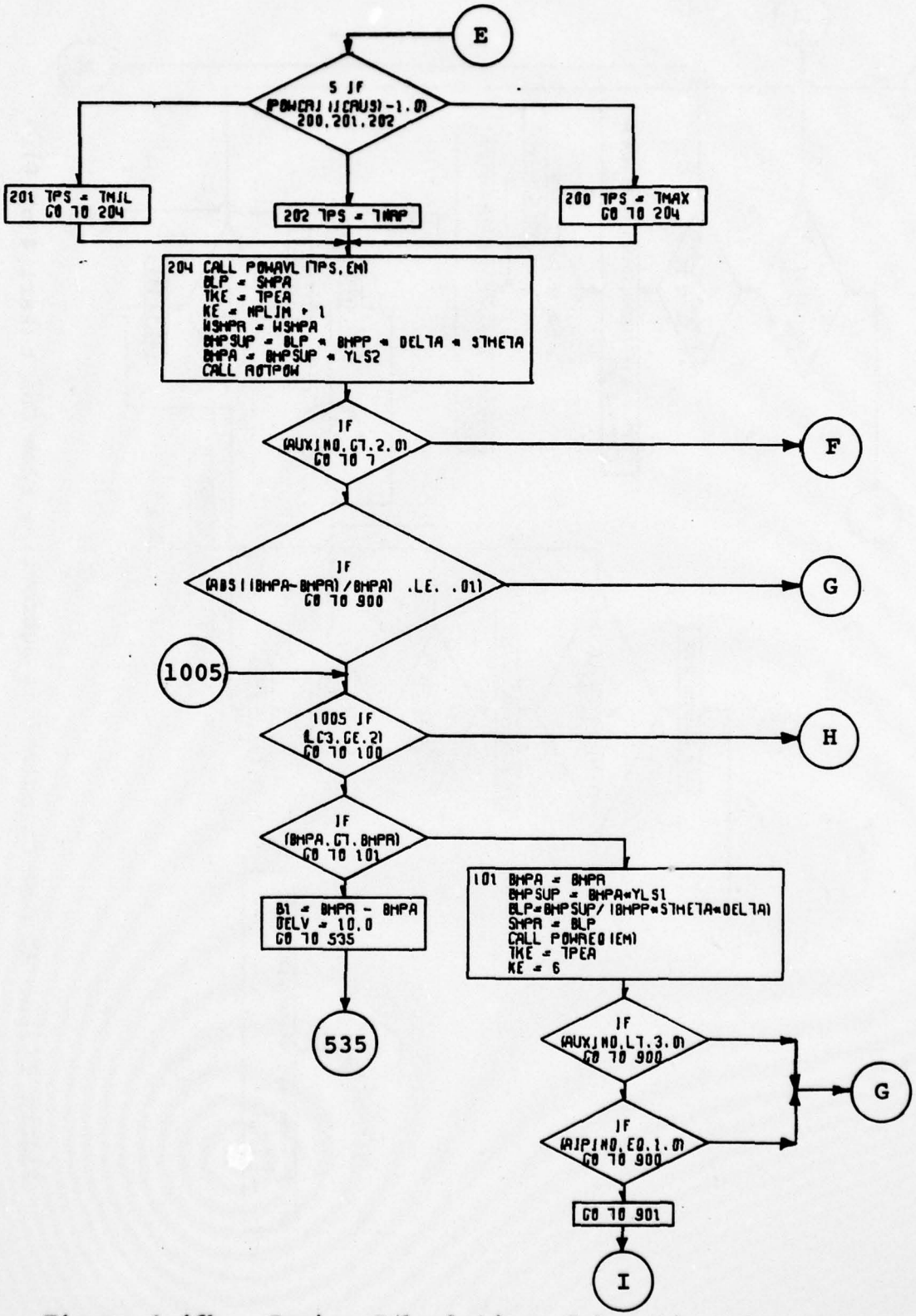

Figure 4-46b. Cruise Calculations Subroutine Flow Chart (Part 3 of 8).

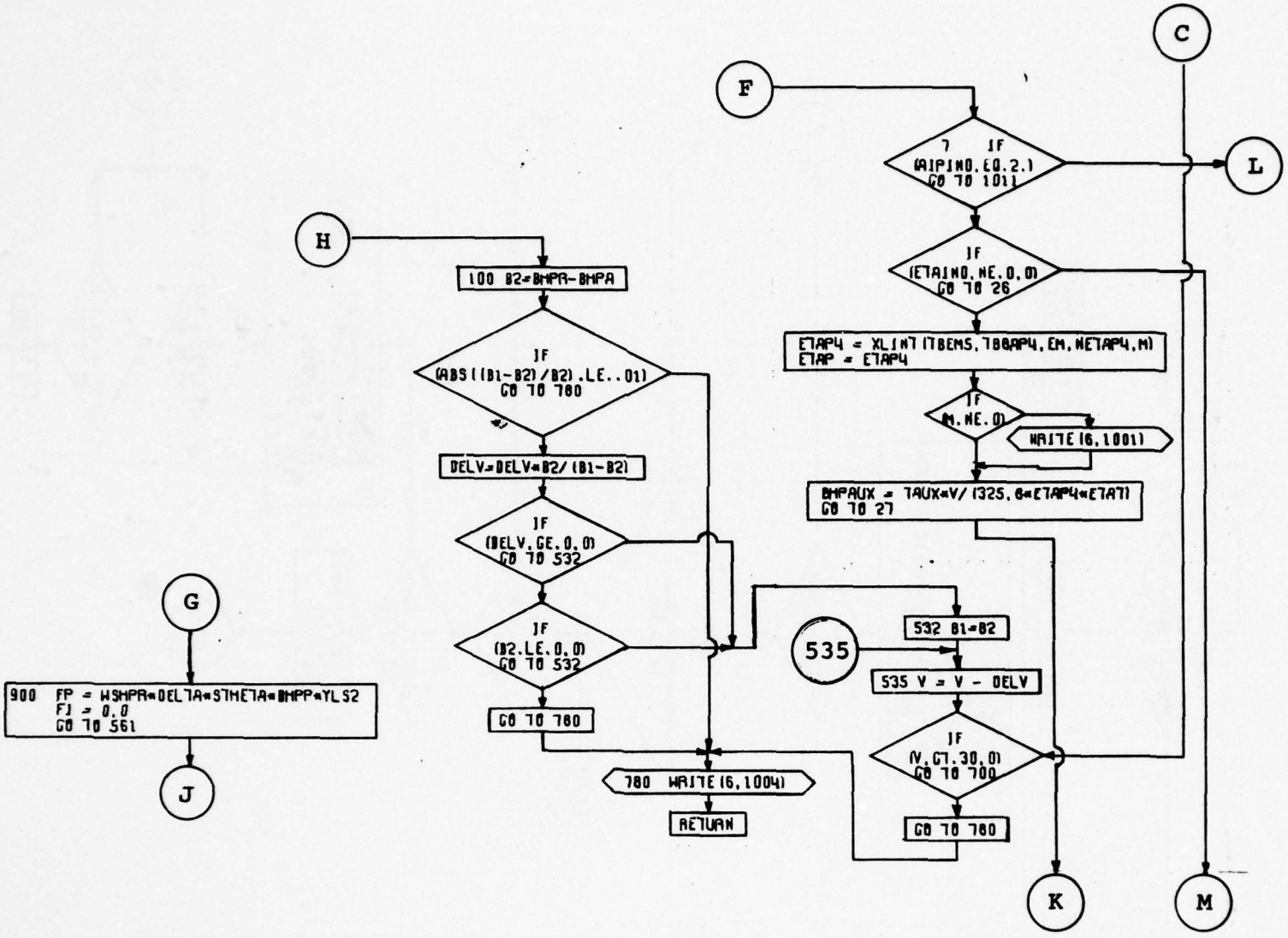

Figure 4-46b. Cruise Calculations Subroutine Flow Chart (Part 4 of 8).

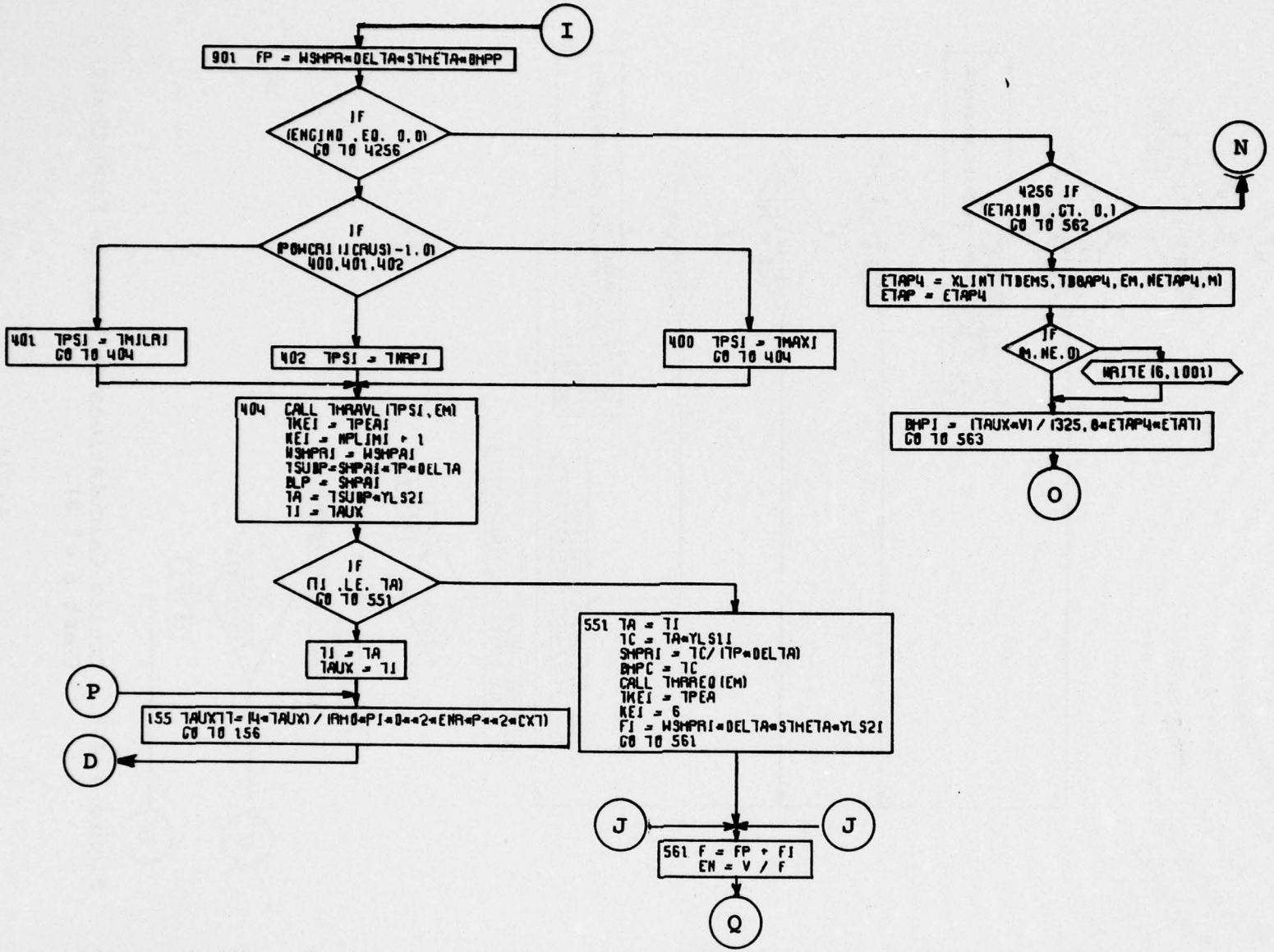

Figure 4-46b. Cruise Calculations Subroutine Flow Chart (Part 5 of 8).

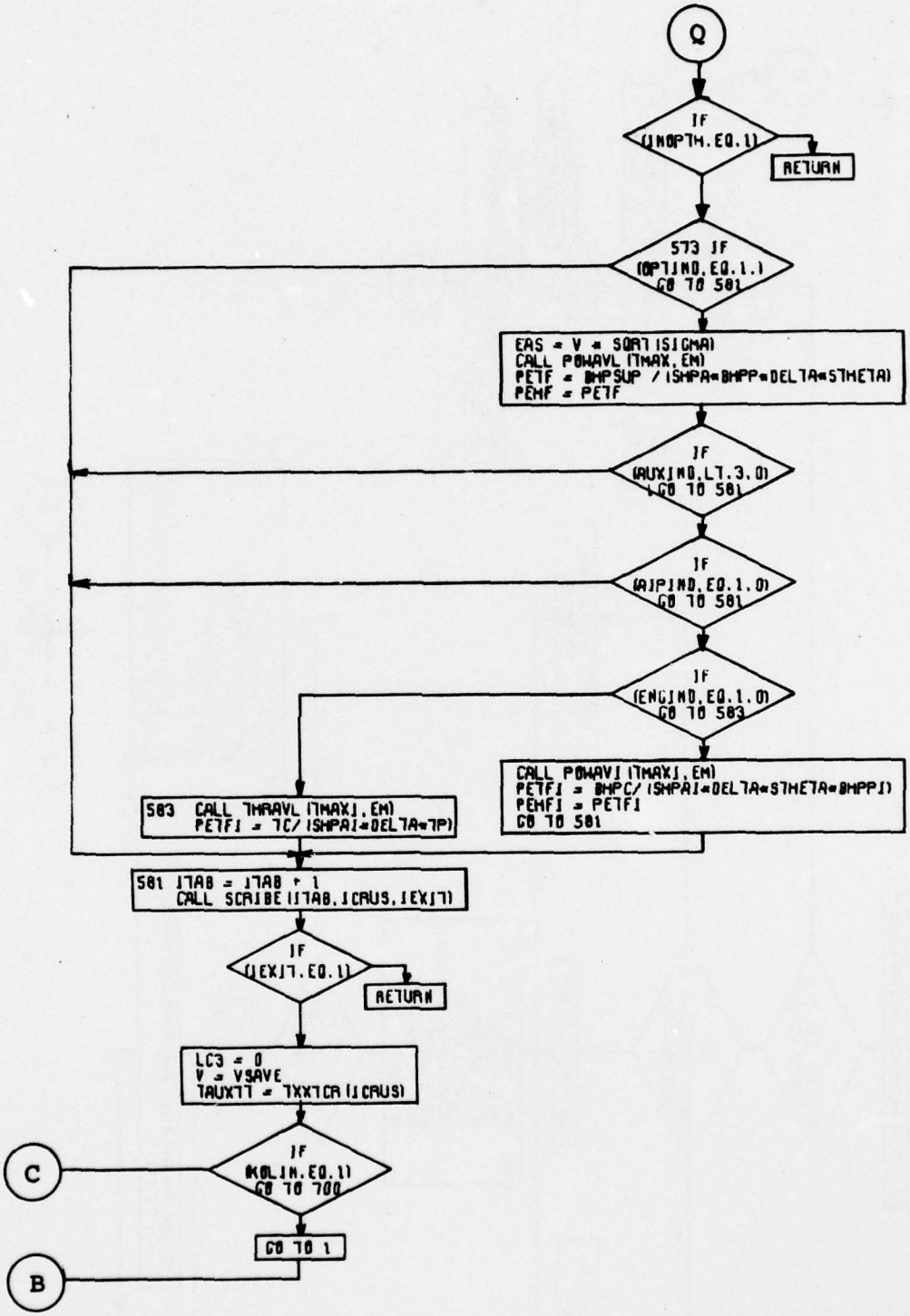

Figure 4-46b. Cruise Calculations Subroutine Flow Chart (Part 6 of 8).

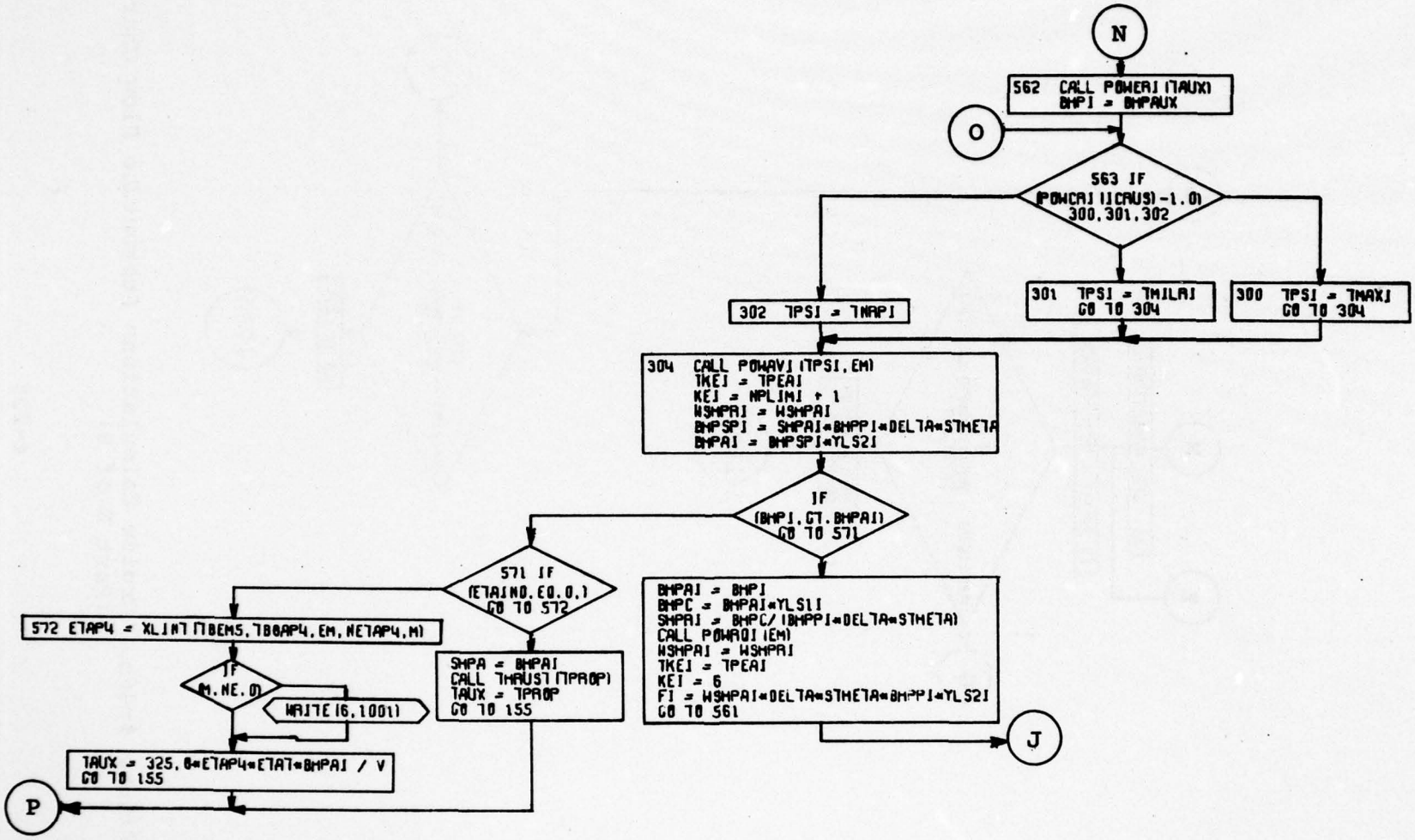

Figure 4-46b. Cruise Calculations Subroutine Flow Chart (Part 7 of 8).

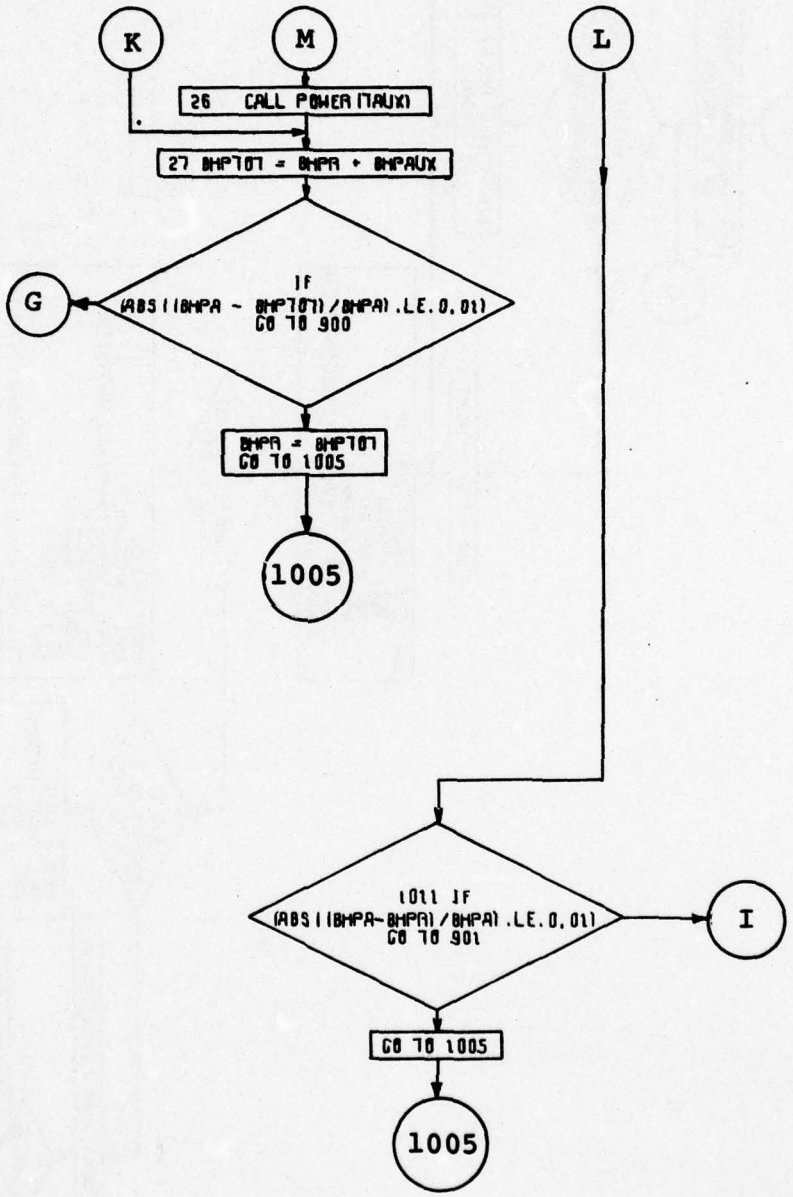

Figure 4-46b. Cruise Calculations Subroutine Flow Chart (Part 8 of 8).

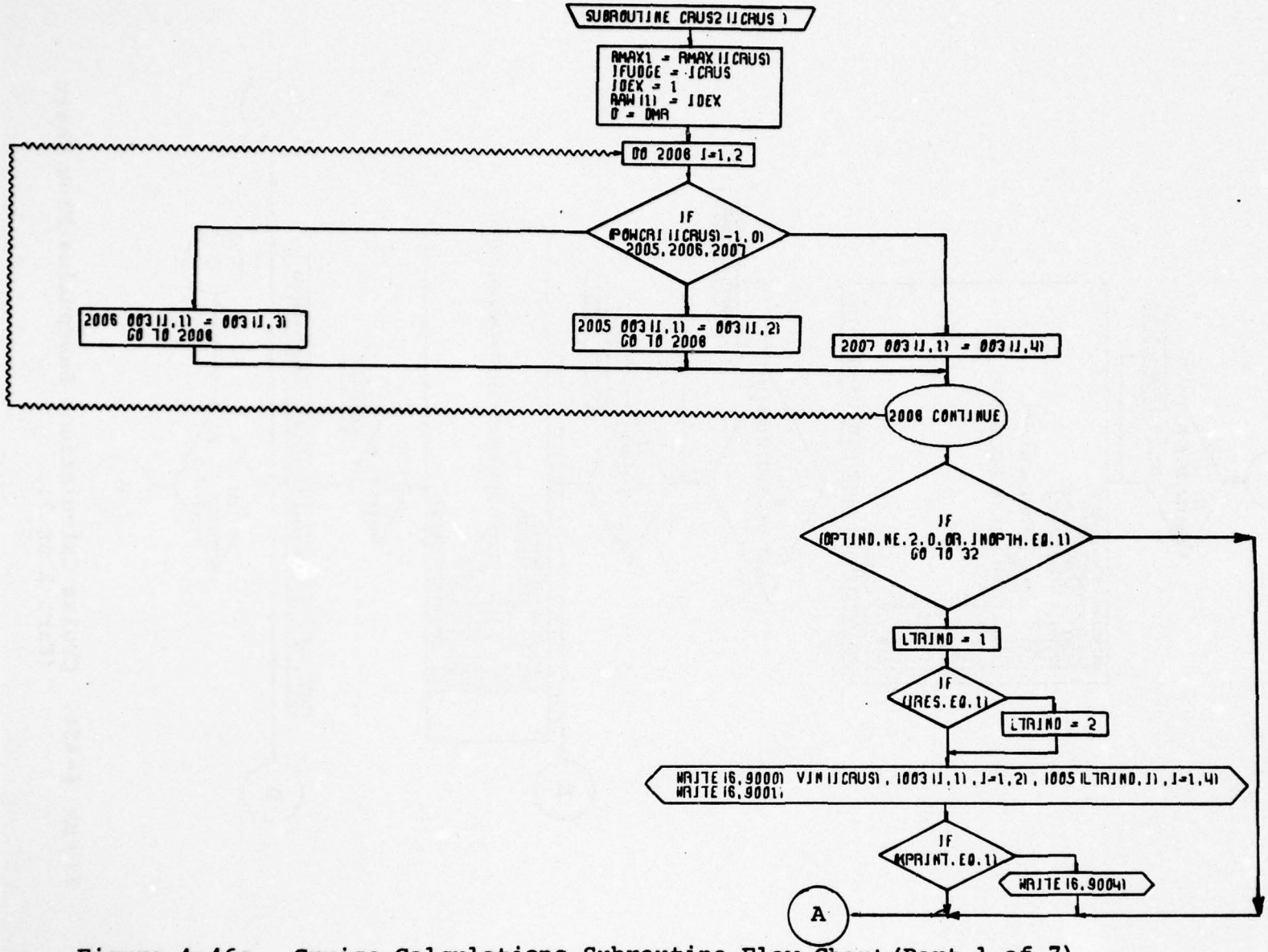

Figure 4-46c. Cruise Calculations Subroutine Flow Chart (Part 1 of 7).

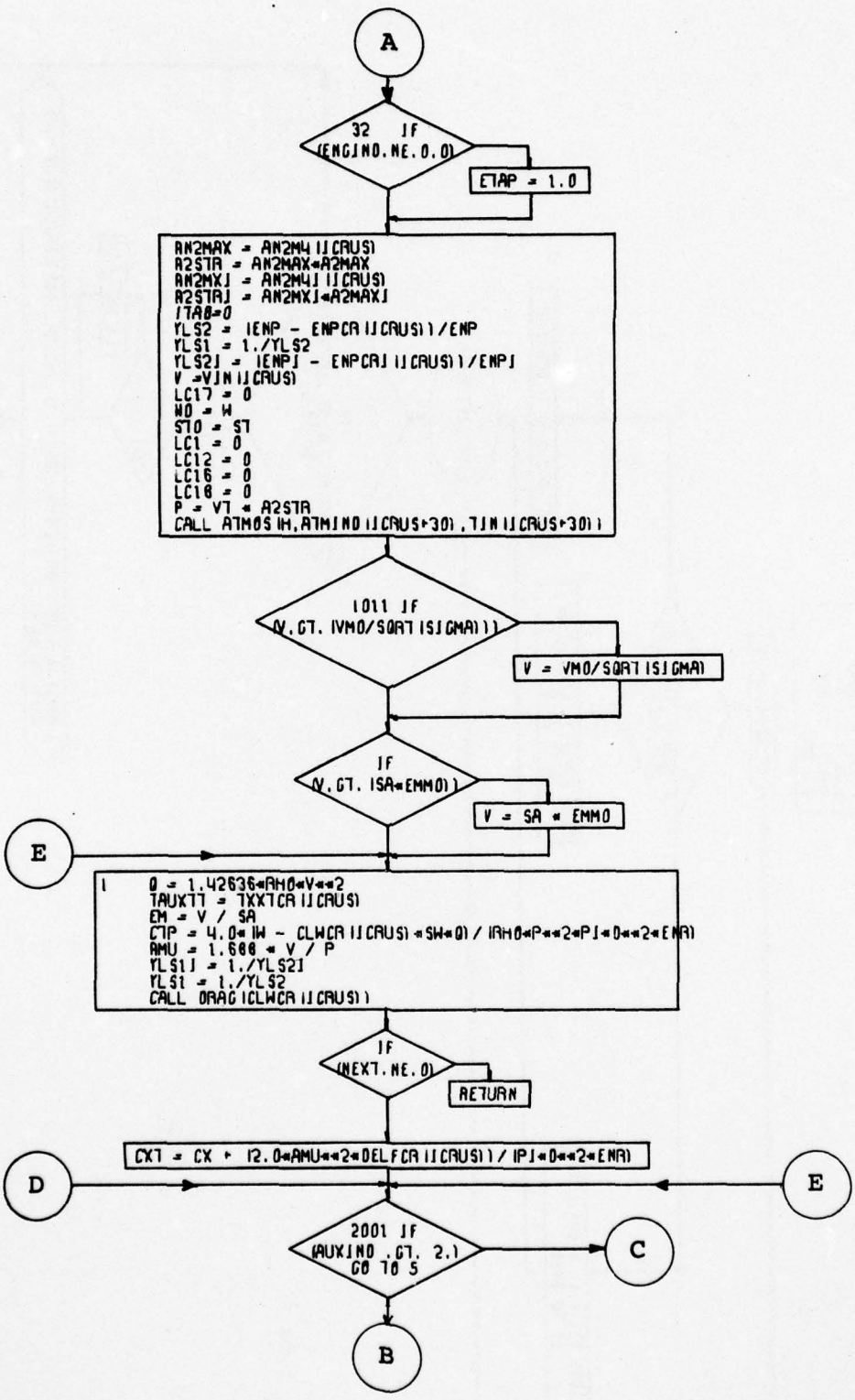

Figure 4-46c. Cruise Calculations Subroutine Flow Chart (Part 2 of 7).

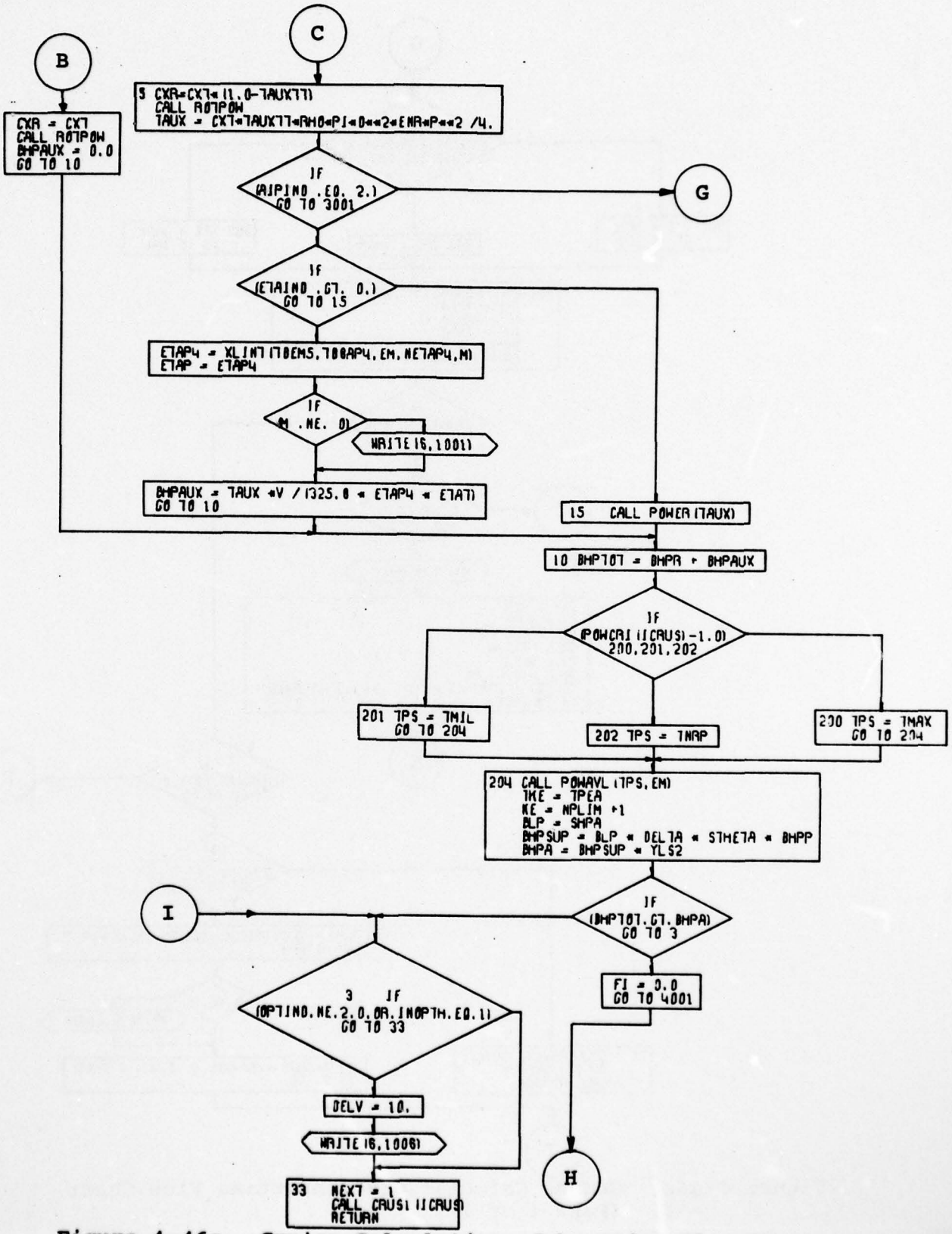

Figure 4-46c. Cruise Calculations Subroutine Flow Chart (Part 3 of 7).

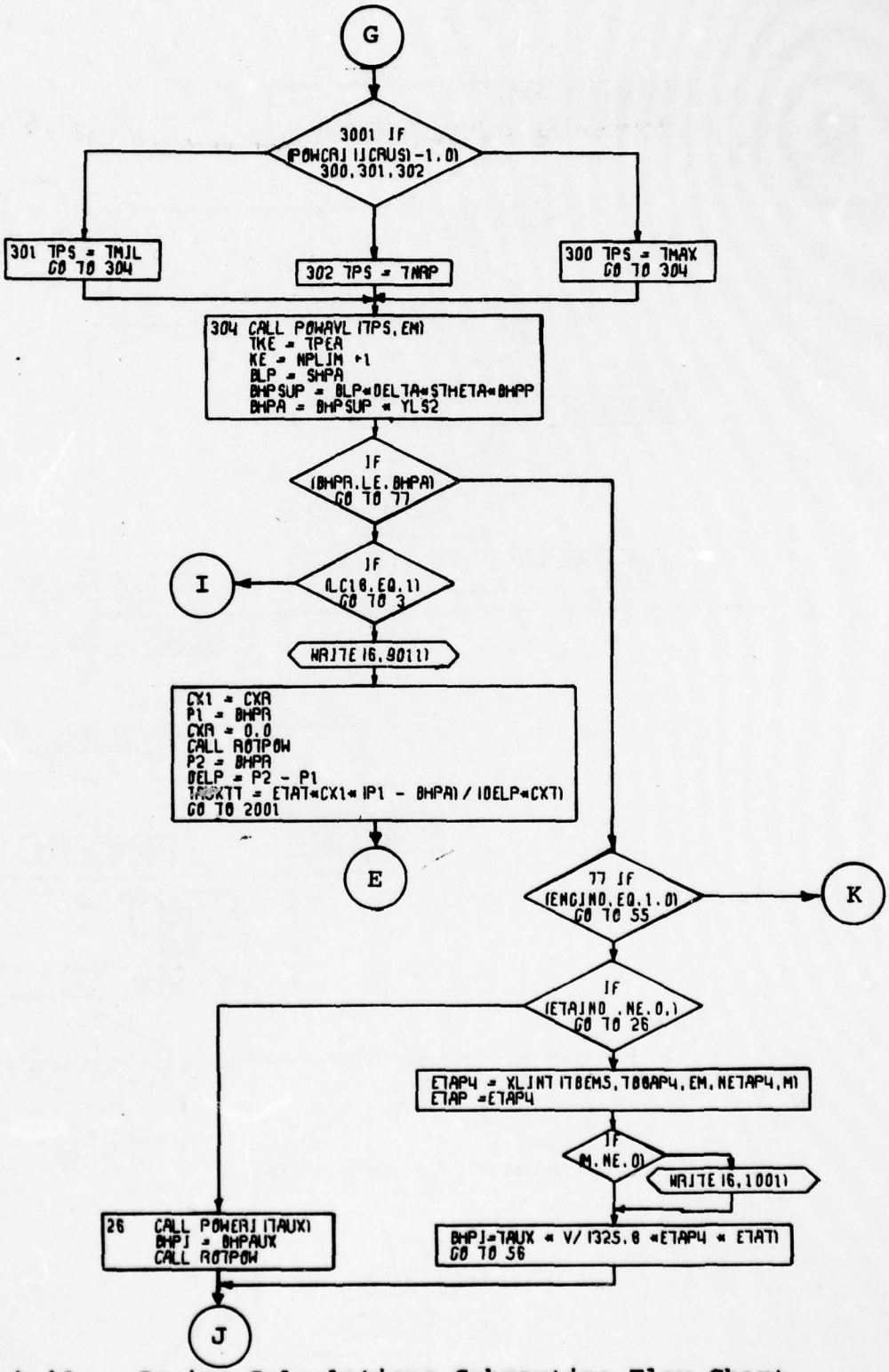

Figure 4-46c. Cruise Calculations Subroutine Flow Chart (Part 4 of 7).

AD-A046 367 BOEING VERTOL CO PHILADELPHIA PA F/G 1/3
HESCOMP. THE HELICOPTER SIZING AND PERFORMANCE COMPUTER PROGRAM--ETC(U)
NOV 74 S J DAVIS, J S WISNIEWSKI N62269-74-C-0757
UNCLASSIFIED D210-10699-2 NL

4 OF 6
AD A046367

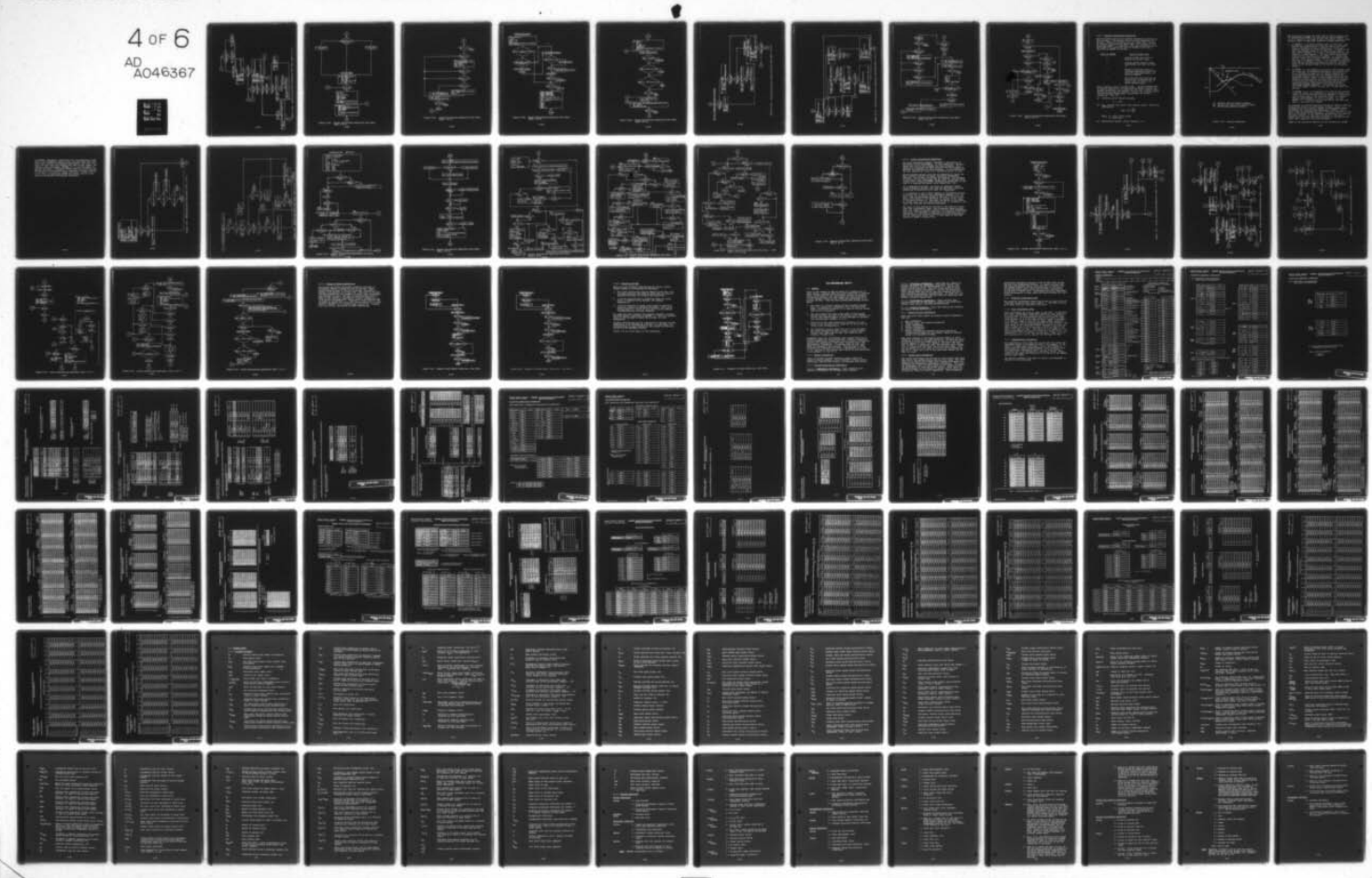

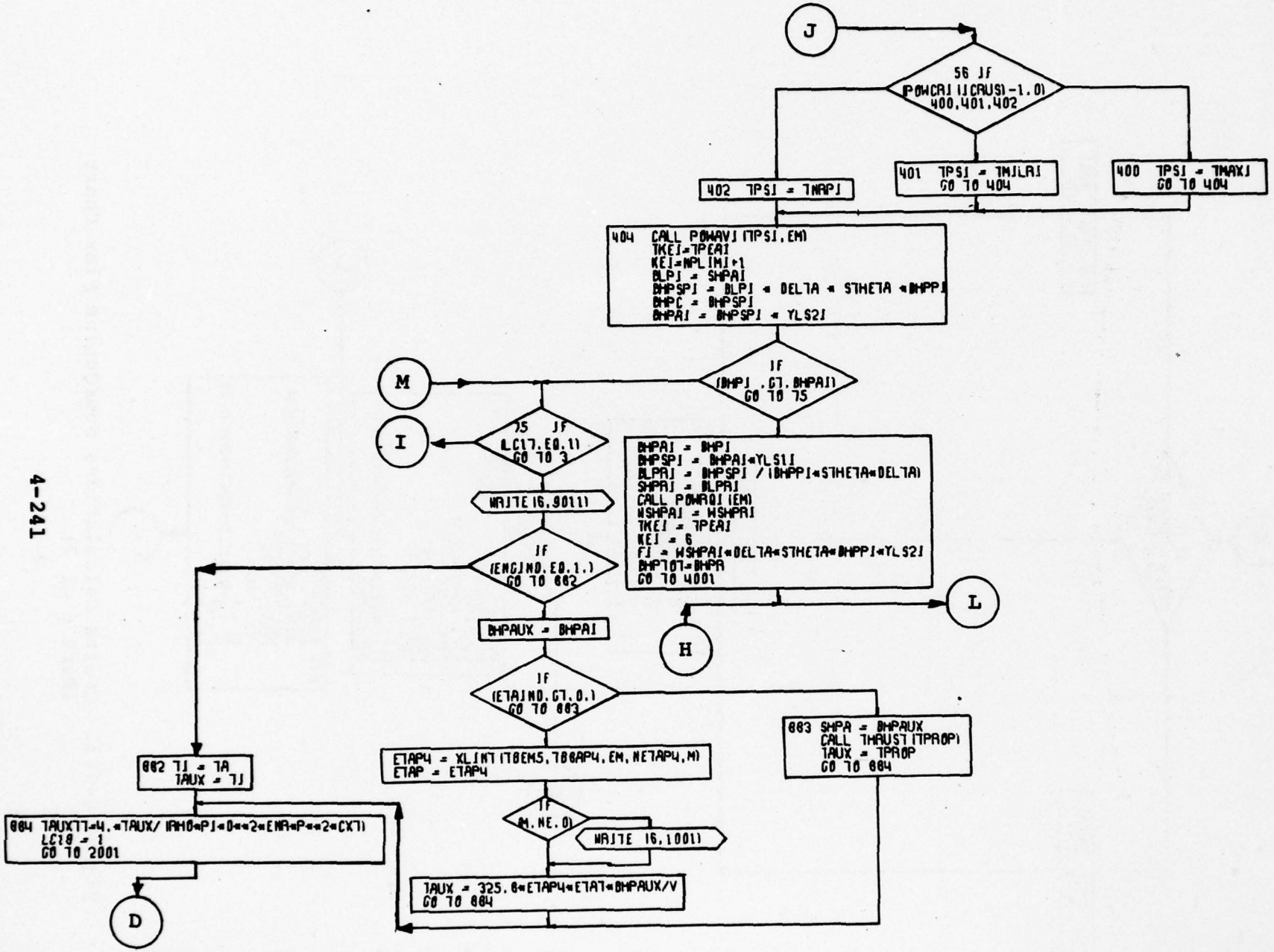

Figure 4-46c. Cruise Calculations Subroutine Flow Chart (Part 5 of 7).

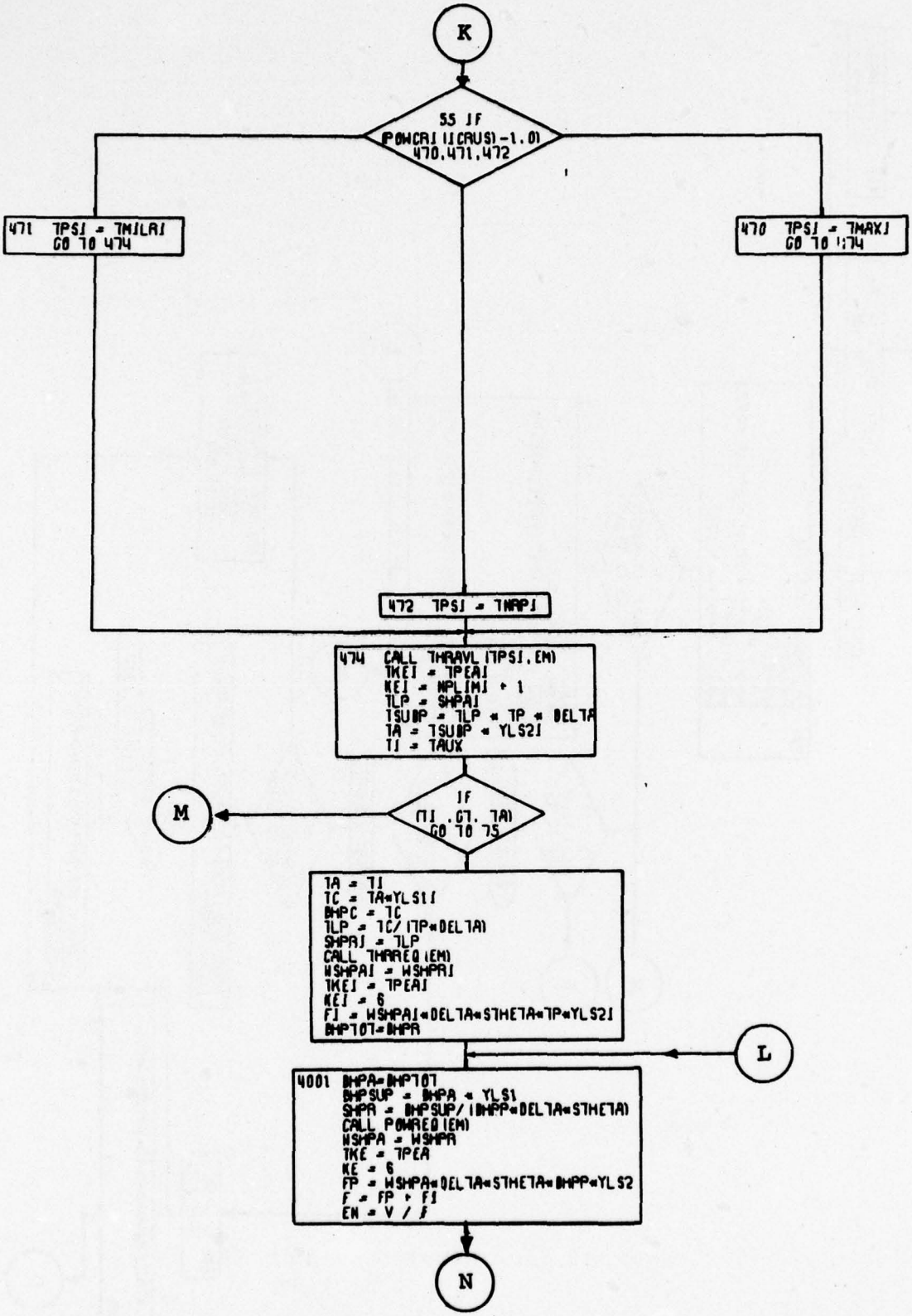

Figure 4-46c. Cruise Calculations Subroutine Flow Chart (Part 6 of 7).

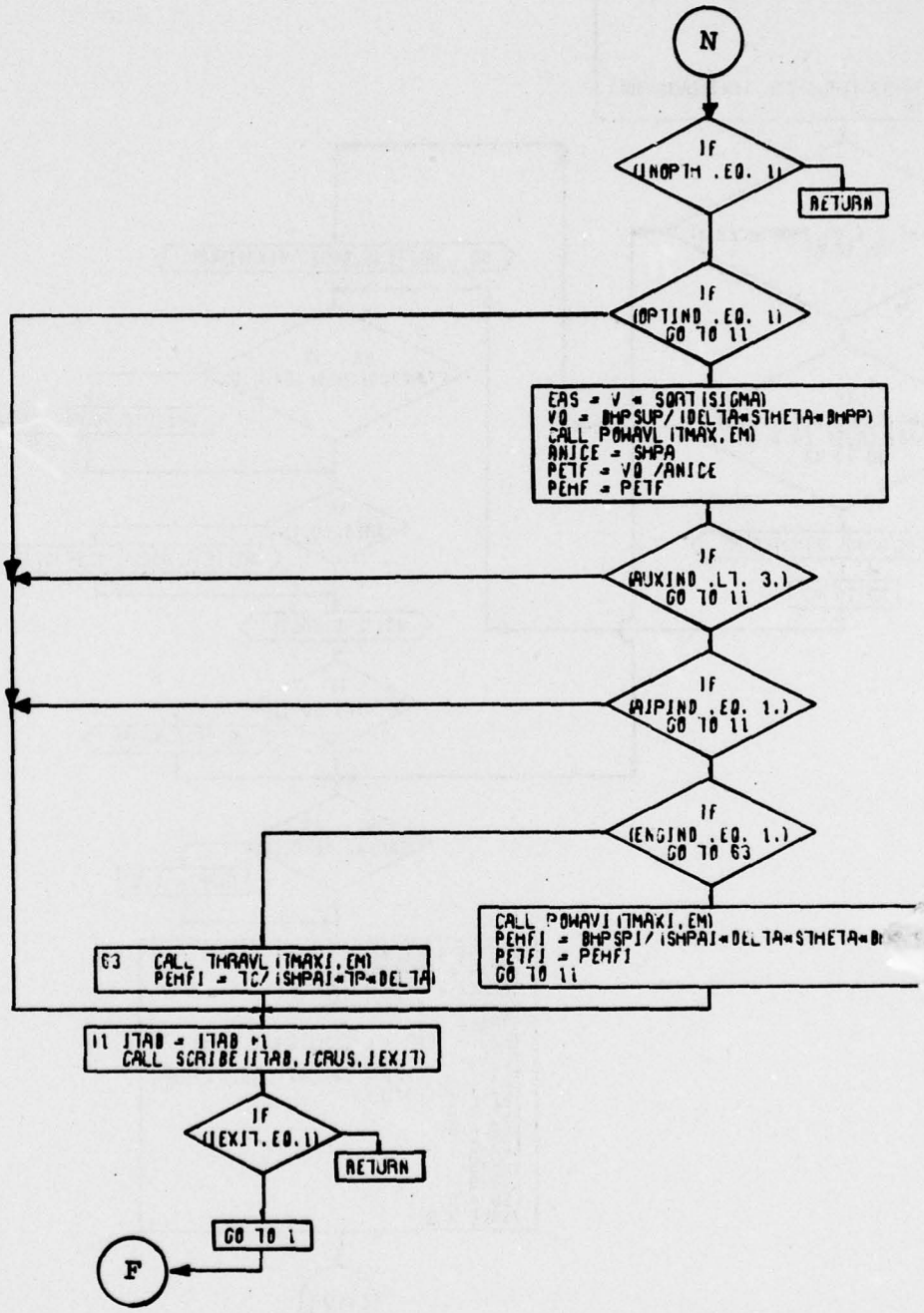

Figure 4-46c. Cruise Calculations Subroutine Flow Chart (Part 7 of 7).

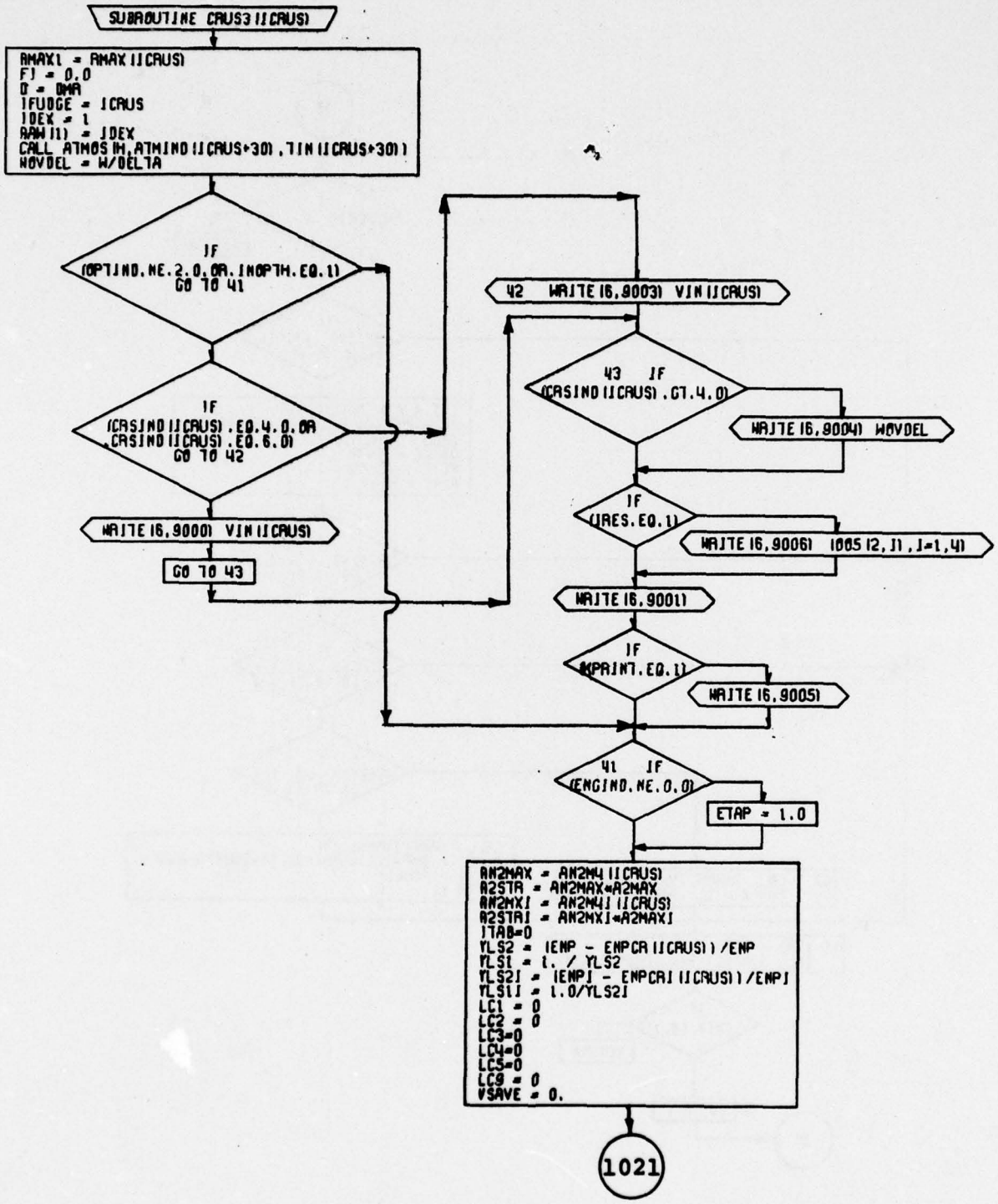

Figure 4-46d. Cruise Calculations Subroutine Flow Chart (Part 1 of 6).

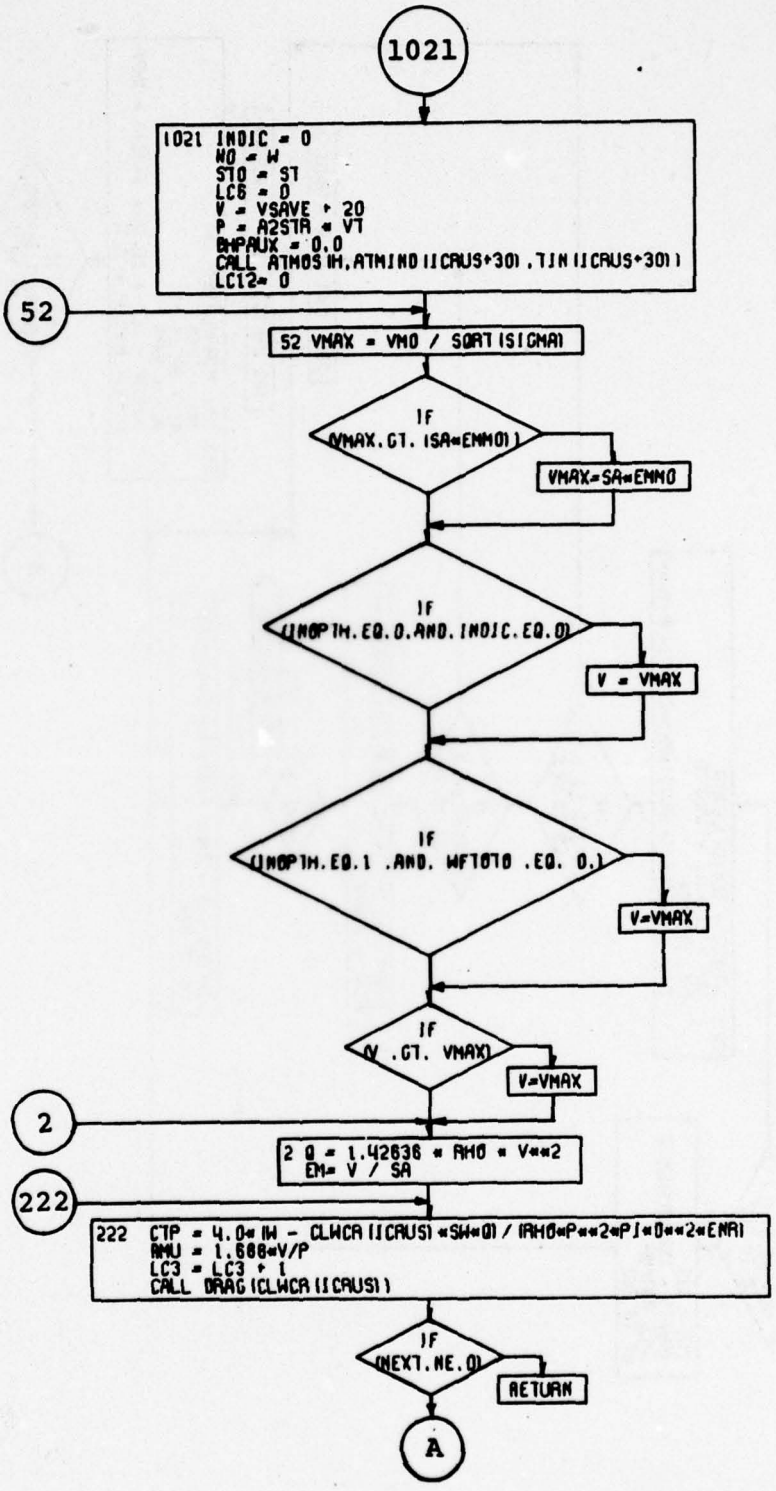

Figure 4-46d. Cruise Calculations Subroutine Flow Chart (Part 2 of 6).

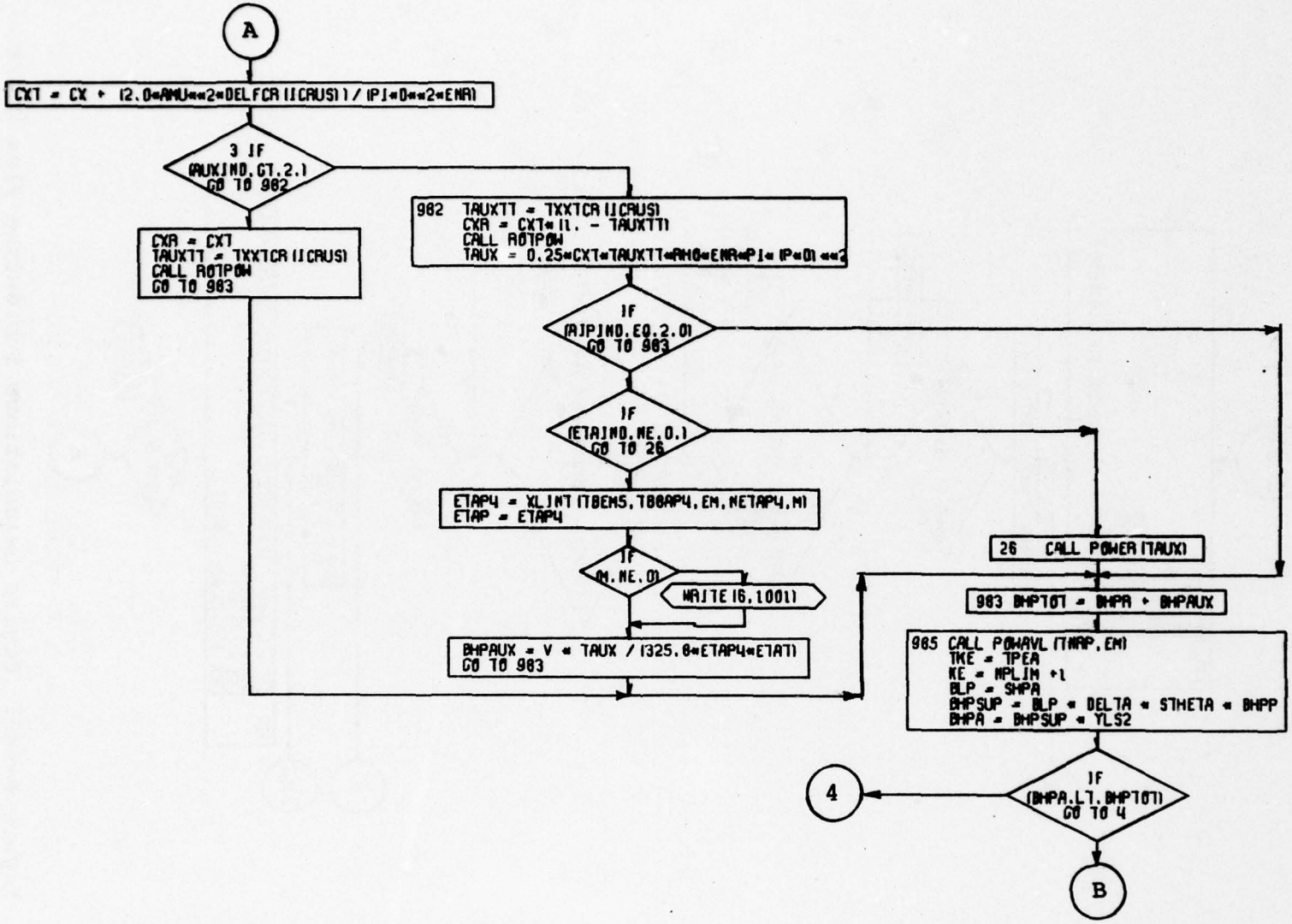

Figure 4-46d. Cruise Calculations Subroutine Flow Chart(Part 3 of 6).

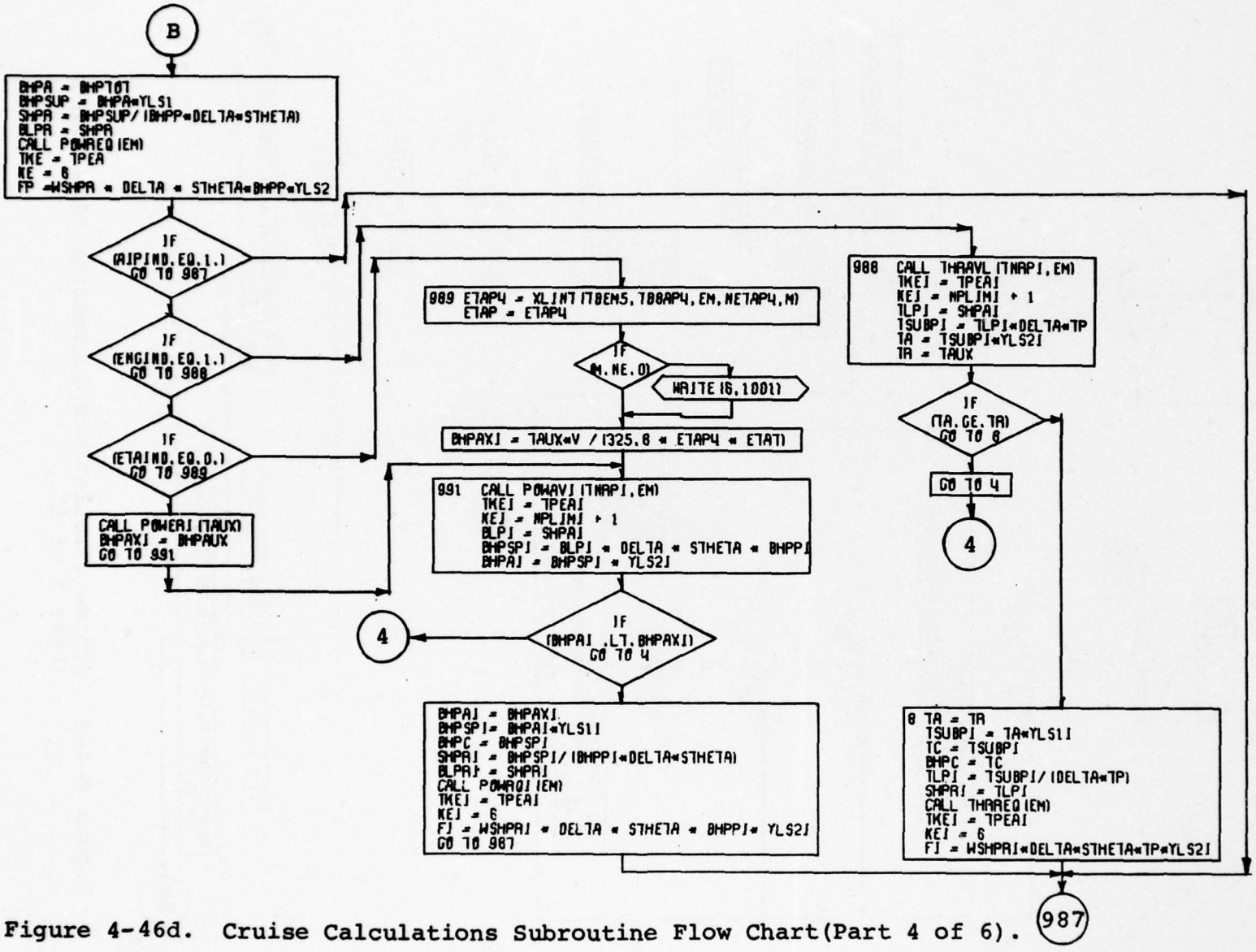

Figure 4-46d. Cruise Calculations Subroutine Flow Chart(Part 4 of 6).

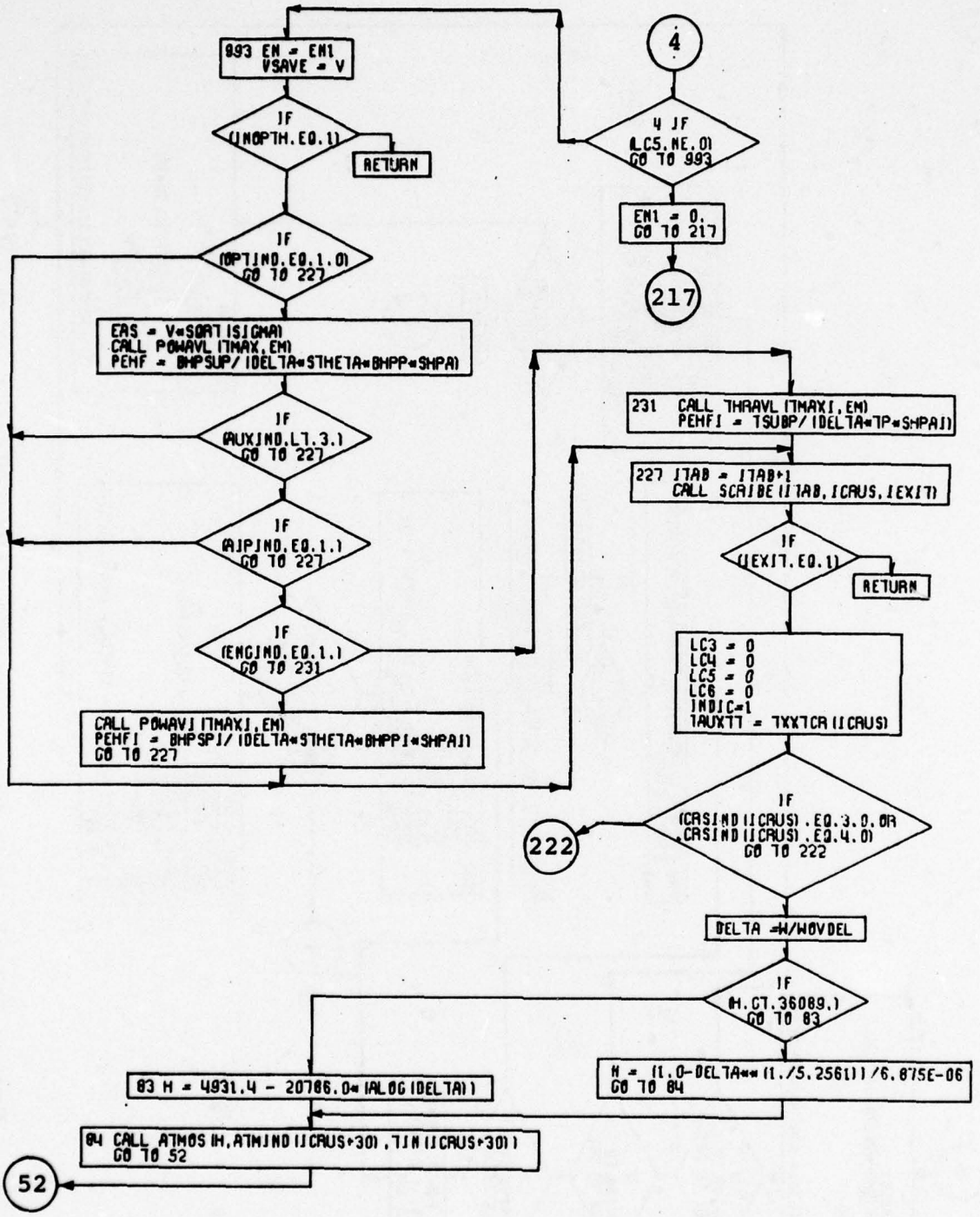

Figure 4-46d. Cruise Calculations Subroutine Flow Chart (Part 5 of 6).

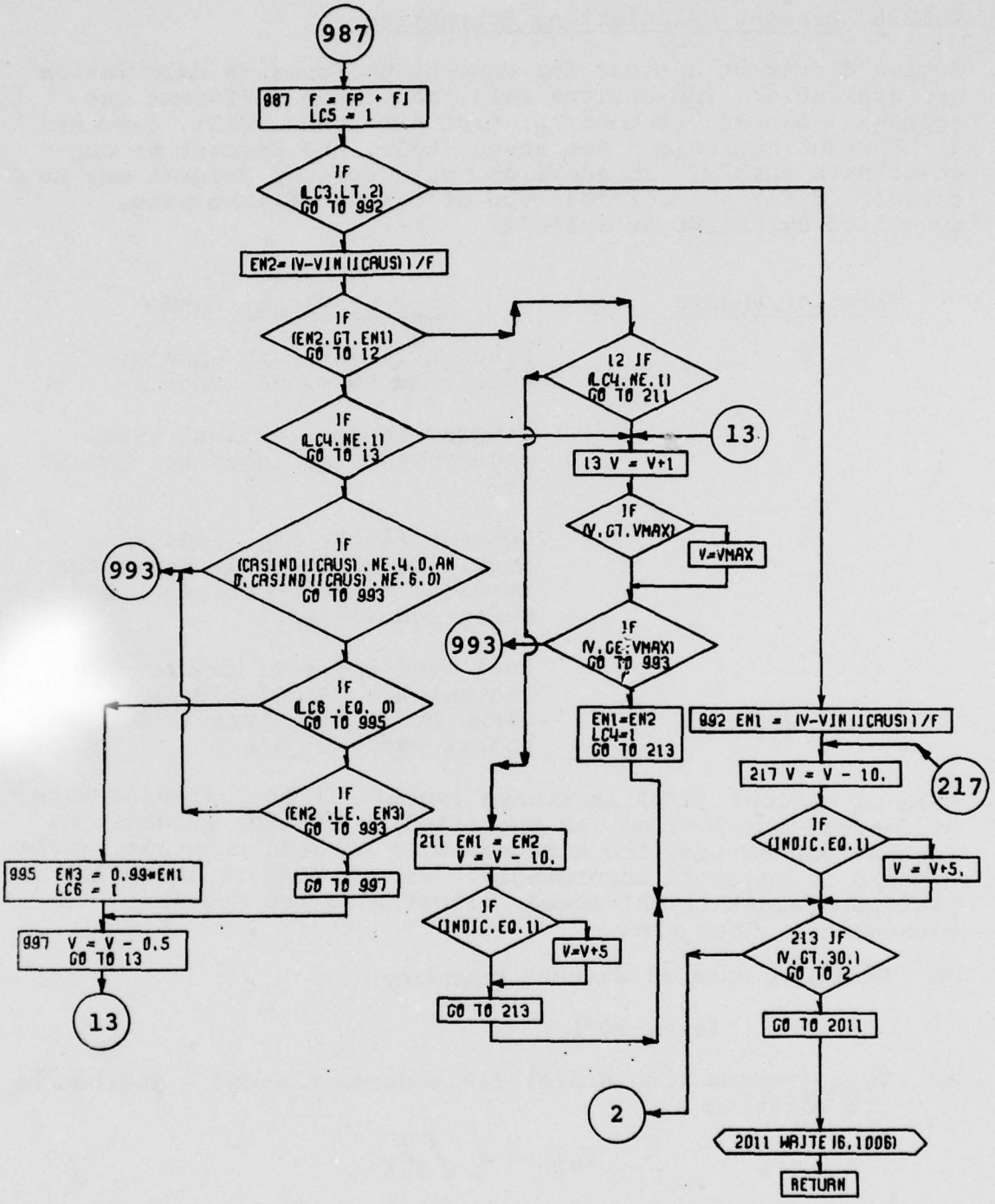

Figure 4-46d. Cruise Calculations Subroutine Flow Chart (Part 6 of 6).

4.12.5 Descent Calculations Subroutine

Twelve different options for descent performance calculation are available. The options fall into three different categories: descent at constant true air speed (TAS), descent at constant equivalent air speed (EAS), and descent at constant Mach number. In addition, each type of descent may be calculated for a specified type of descent flight path, specified by RMAXND as follows:

Value of RMAXND	Type of Flight Path
0	Descent flight path ends at specified terminal range.
1	Program checks terminal range requirement, but does not match it.
2	Descent flight path ends at a specified minimum altitude, the terminal range requirement not being considered.
3	Fuel used and time required for descent are calculated, but no range credit is given (i.e., spiral descent path).

Rate of descent (R/D) is always input. If the airspeed-rate of descent combination (as specified by DESIND) exceeds the descent boundaries, the airspeed will be held constant, while the R/D is adjusted accordingly. Figure 4-47 in which R/D is plotted against flight speed, illustrates the descent boundaries. They are:

(a) Vertical rate of descent boundary

($\gamma = -90^{\circ}$)

(b) $V_{V_{RL}}$ (vortex ring state) limit descent speed - defined by the equation

$$V_{VRL} = \frac{2}{3}\sqrt{\frac{T}{2\rho A}}$$

where T = total rotor thrust
A = disc area.

(c) Autorotative descent (power required = 0).

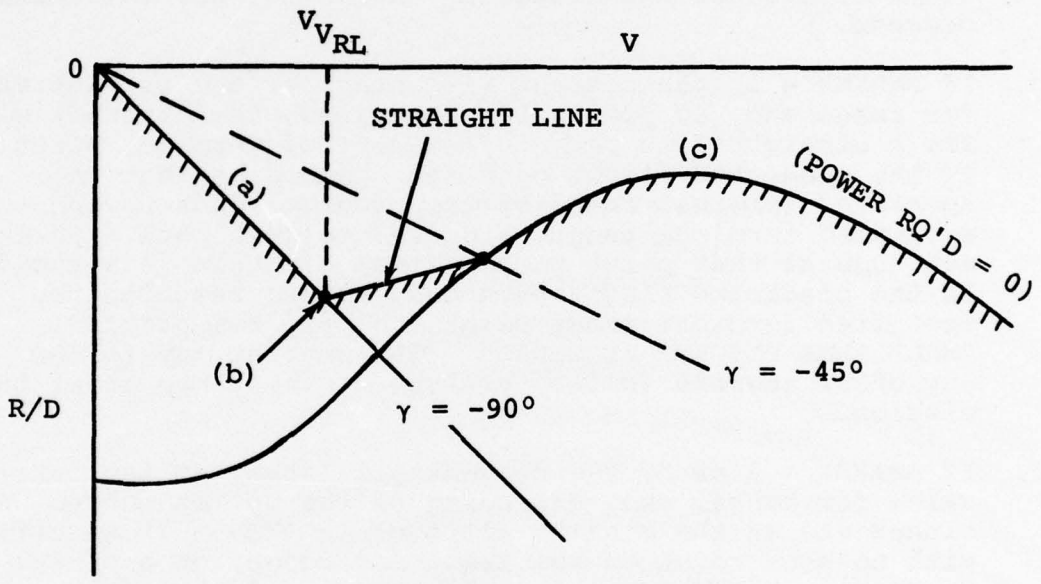

(a) Vertical rate of descent boundary
(b) Vortex ring state limit descent speed
(c) Autorotative descent boundary

Figure 4-47. Descent Boundaries.

The distinction between the first type of descent flight path (as specified by RMAXND = 0) and the last three (RMAXND = 1, 2, 3) in regard to the range at which the descent starts, when terminal range is specified, should be clearly understood.

a. If RMAXND = 0, no spiral descent path is permitted. The program will calculate the value for range at the beginning of the descent which is required to satisfy the terminal condition on range and altitude. In order to do this, the program "backs up" on the previous segment. If this option (RMAXND = 0) is used, the descent must be preceded by a cruise segment. The input value for maximum range for the preceding cruise segment is a dummny value and the cruise will actually terminate, in order to begin descent, at an earlier point. It is recommended, however, that when the RMAXND = 0 option is to be used, the maximum range during the preceding cruise be input as the same value as the terminal range at the end of the following descent.

b. If RMAXND = 1, the descent will start at the current value for range and, as previously described, the aircraft will fly a straight-line path to the desired terminal point. If the predicted flight path (as checked against the specified terminal range by the program) ends beyond the specified terminal range, a spiral descent path from the altitude at that point to the final altitude is assumed. If the predicted flight path ends before reaching the specified terminal range point, the program prints "SHALLOWER DESCENT REQUIRED". The descent may follow any other segment (climb, cruise, etc.) or may start the mission.

c. If RMAXND = 2 or 3, the descent will start at the current value for range; and, depending on the option chosen, will either end at the minimum altitude (RMAXND = 2) specified, with no constraint on the resulting range, or a spiral descent path (RMAXND = 3) will be assumed. As with RMAXND = 1, the descent options may follow any other segment, or may start the mission.

An increment in aircraft parasite drag may be input in order to simulate the effects of dive brakes, external stores, etc. It is possible to use a descent segment in the mission profile to account for a reserve fuel requirement (SGTIND = 50)(in such a case the helicopter weight at the end of descent is set back to the weight at the beginning of descent)or as a part of the basic mission (in this case the weight is not reset). In either case, the fuel used during descent is included in the total fuel required to size the helicopter.

Input to the subroutine consists of the settings for DESIND

and RMAXND, atmospheric conditions, R/D, the propulsive thrust split, the incremental parasite drag, the operating wing lift coefficient (winged and compound helicopters), the final altitude, the step size, the required TAS, EAS or Mach number, the terminal range requirement (RMAXND = 0, 1) and the number of engines shut down. Subroutine DESPOW (which is called by the Descent calculations subroutine) calculates the power required for descent at the desired flight conditions. Figure 4-48 is a flow chart of subroutine DESPOW and Figure 4-49 is a flow chart of the descent calculations subroutine.

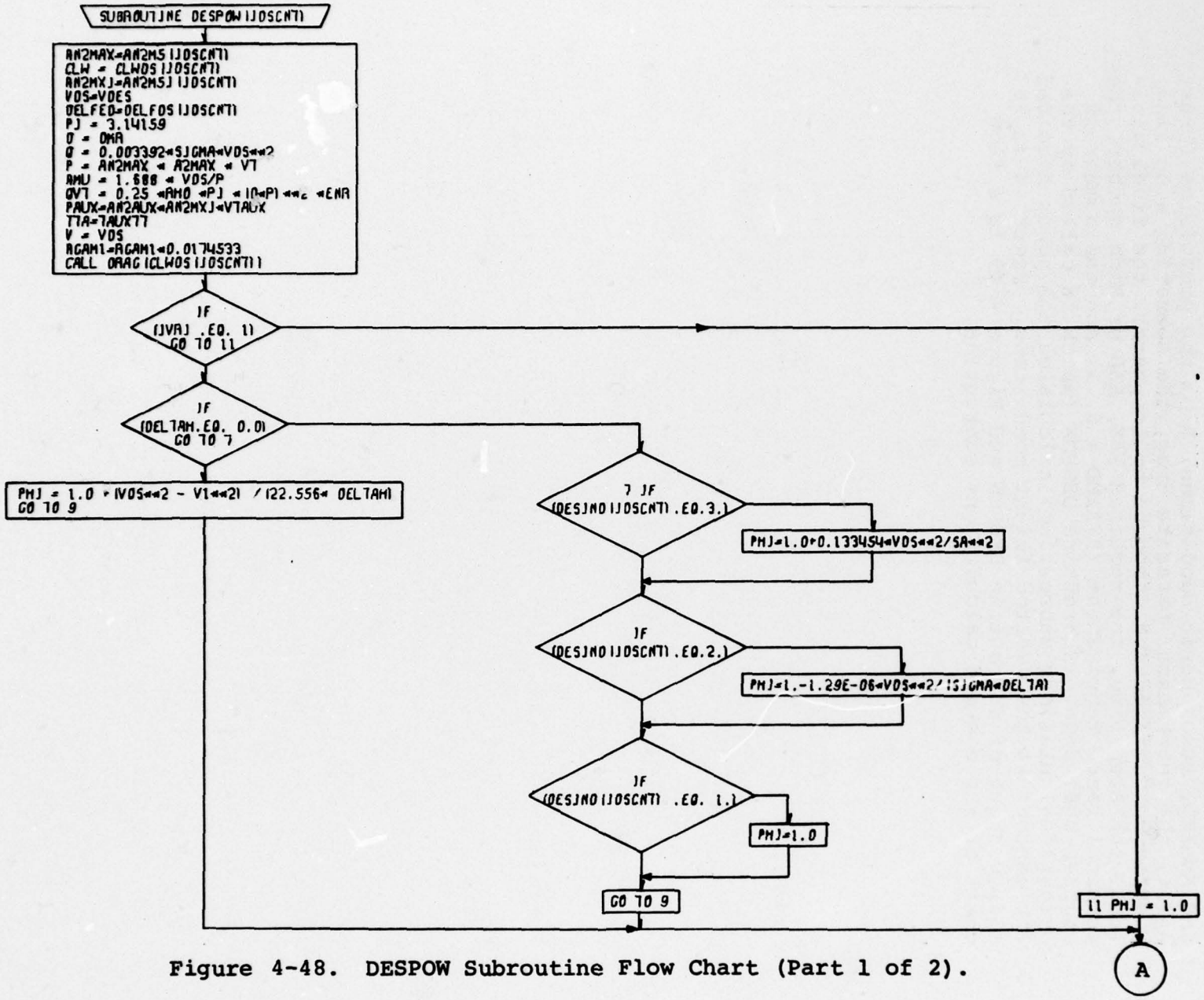

Figure 4-48. DESPOW Subroutine Flow Chart (Part 1 of 2).

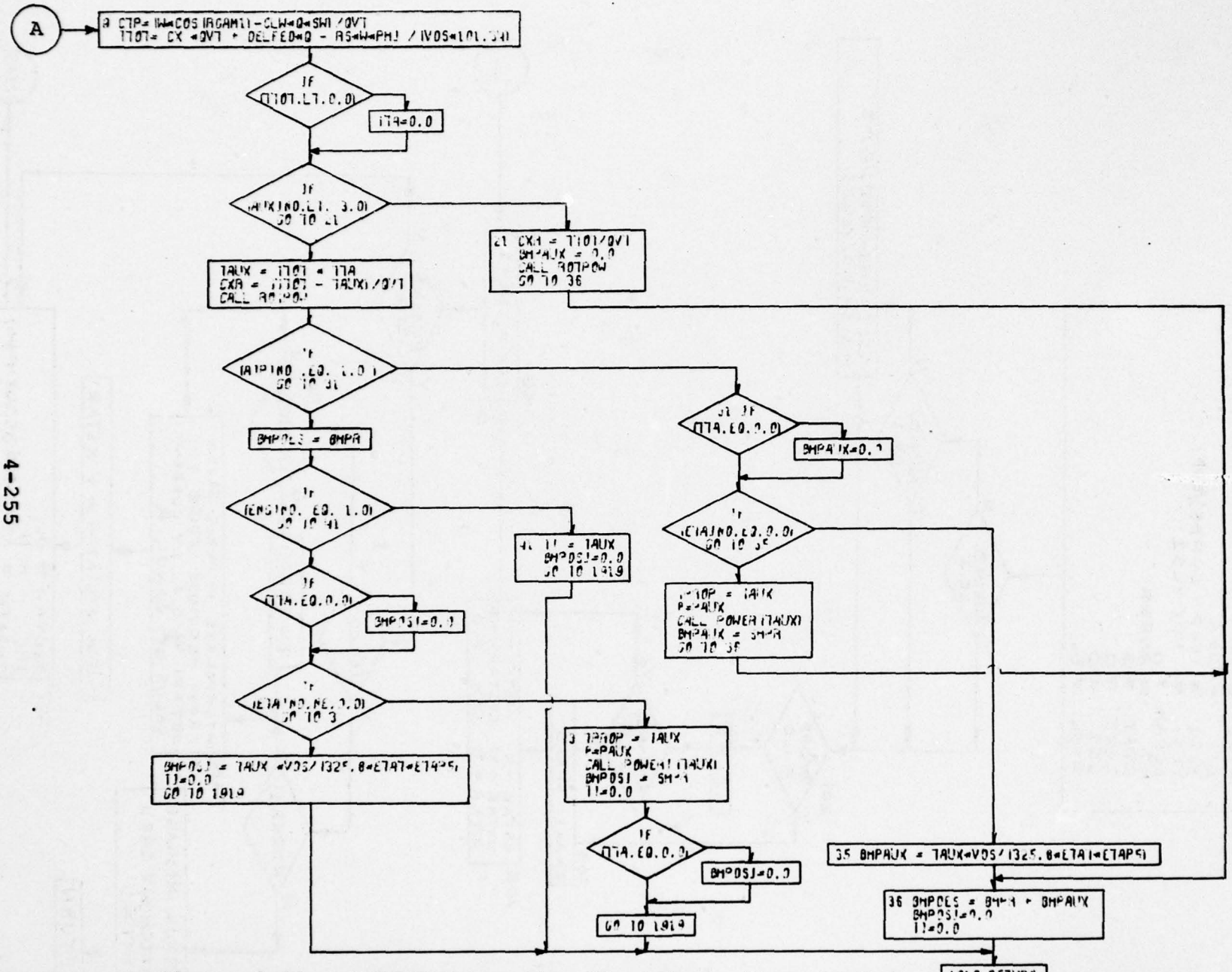

Figure 4-48. DESPOW Subroutine Flow Chart (Part 2 of 2).

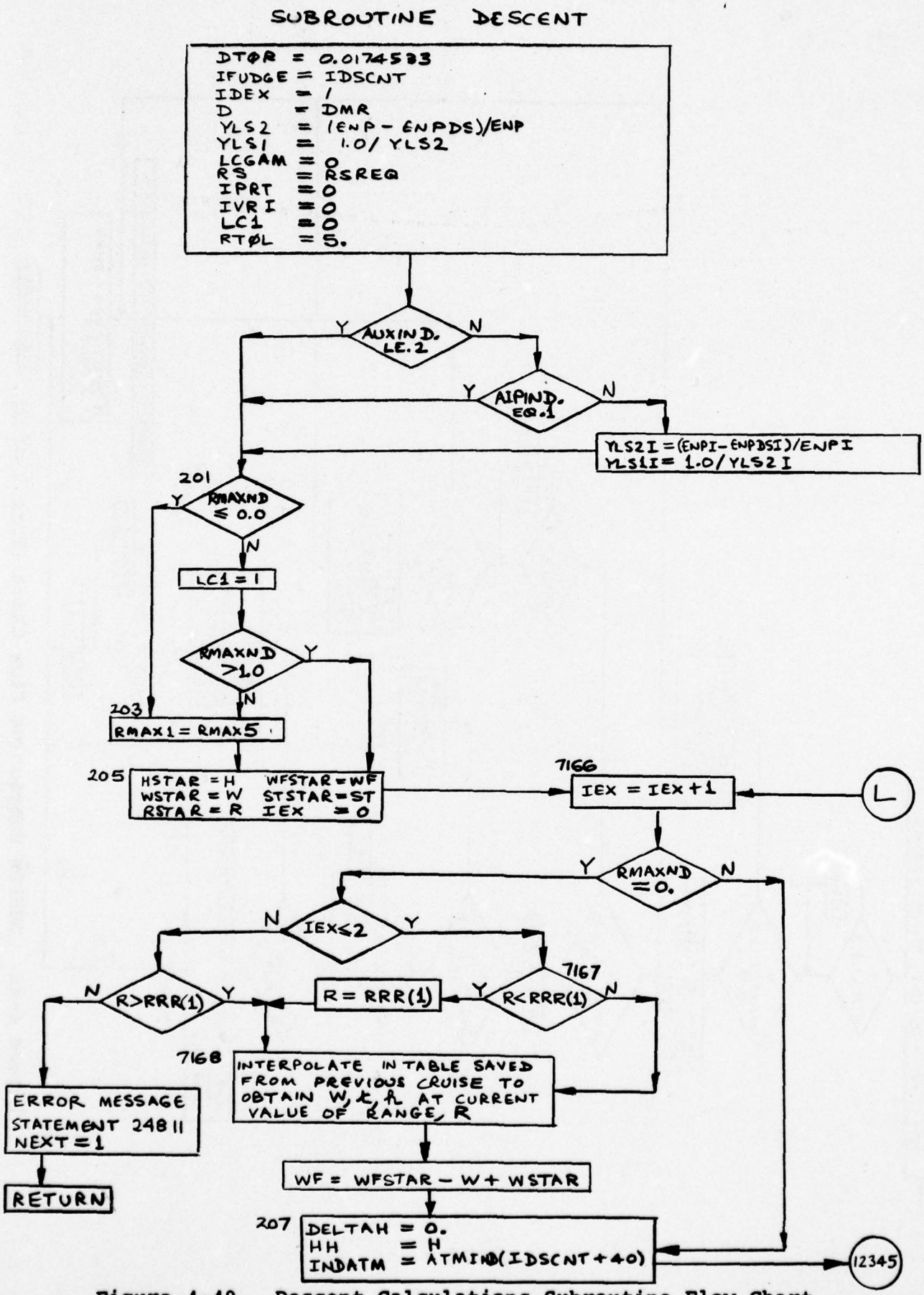

Figure 4-49. Descent Calculations Subroutine Flow Chart (Part 1 of 6).

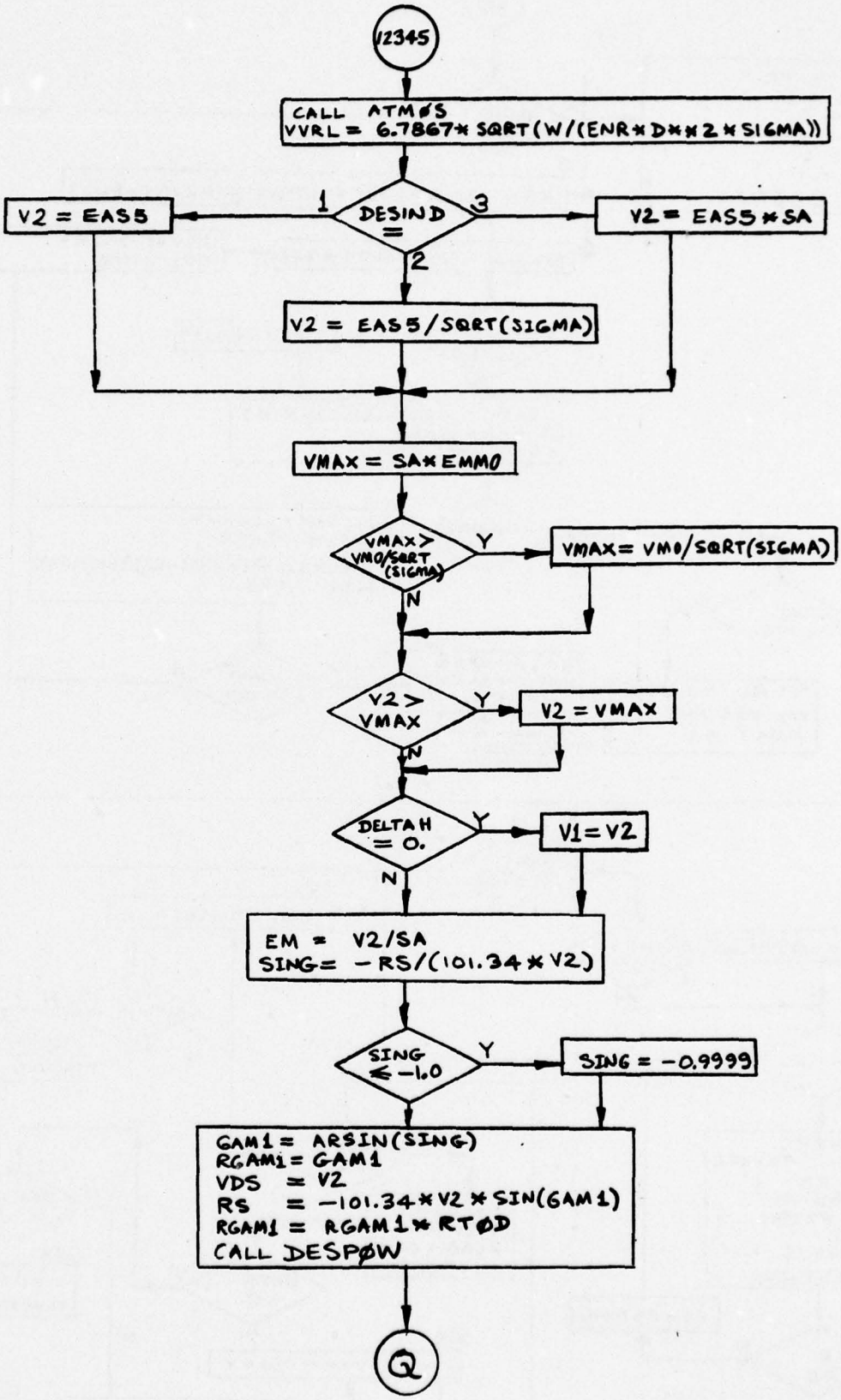

Figure 4-49. Descent Calculations Subroutine Flow Chart (Part 2 of 6).

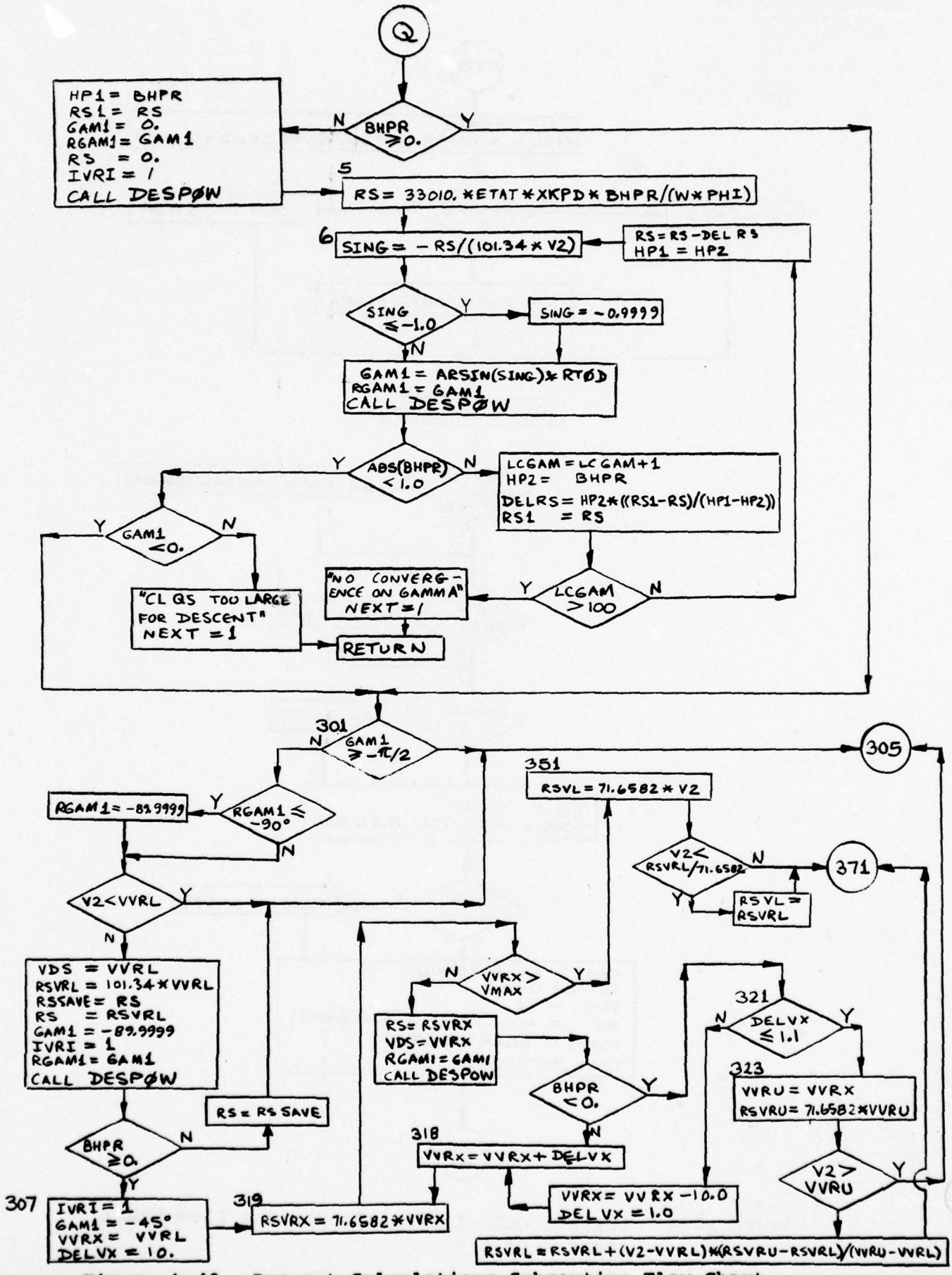

Figure 4-49. Descent Calculations Subroutine Flow Chart (Part 3 of 6).

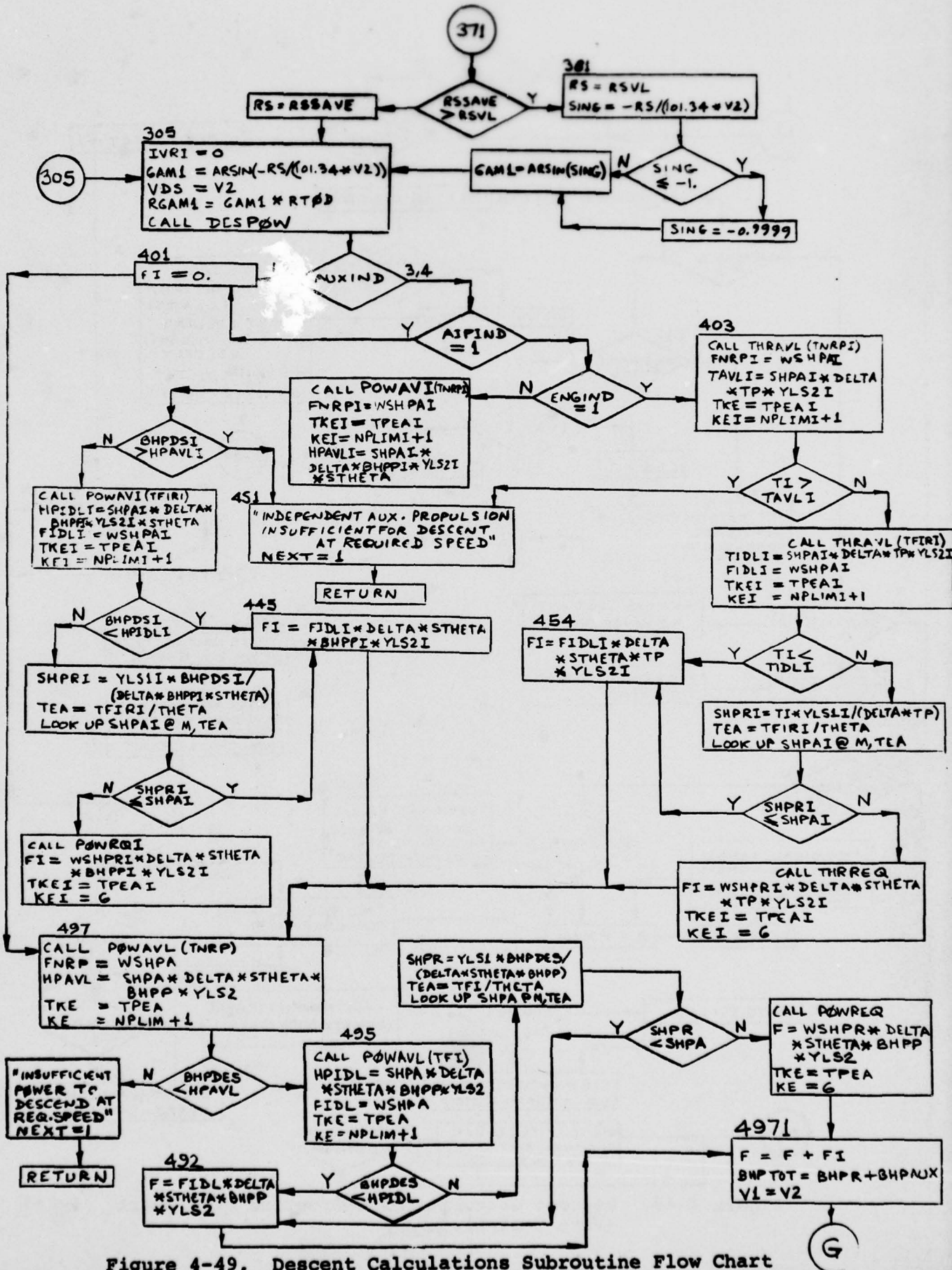

Figure 4-49. Descent Calculations Subroutine Flow Chart (Part 4 of 6).

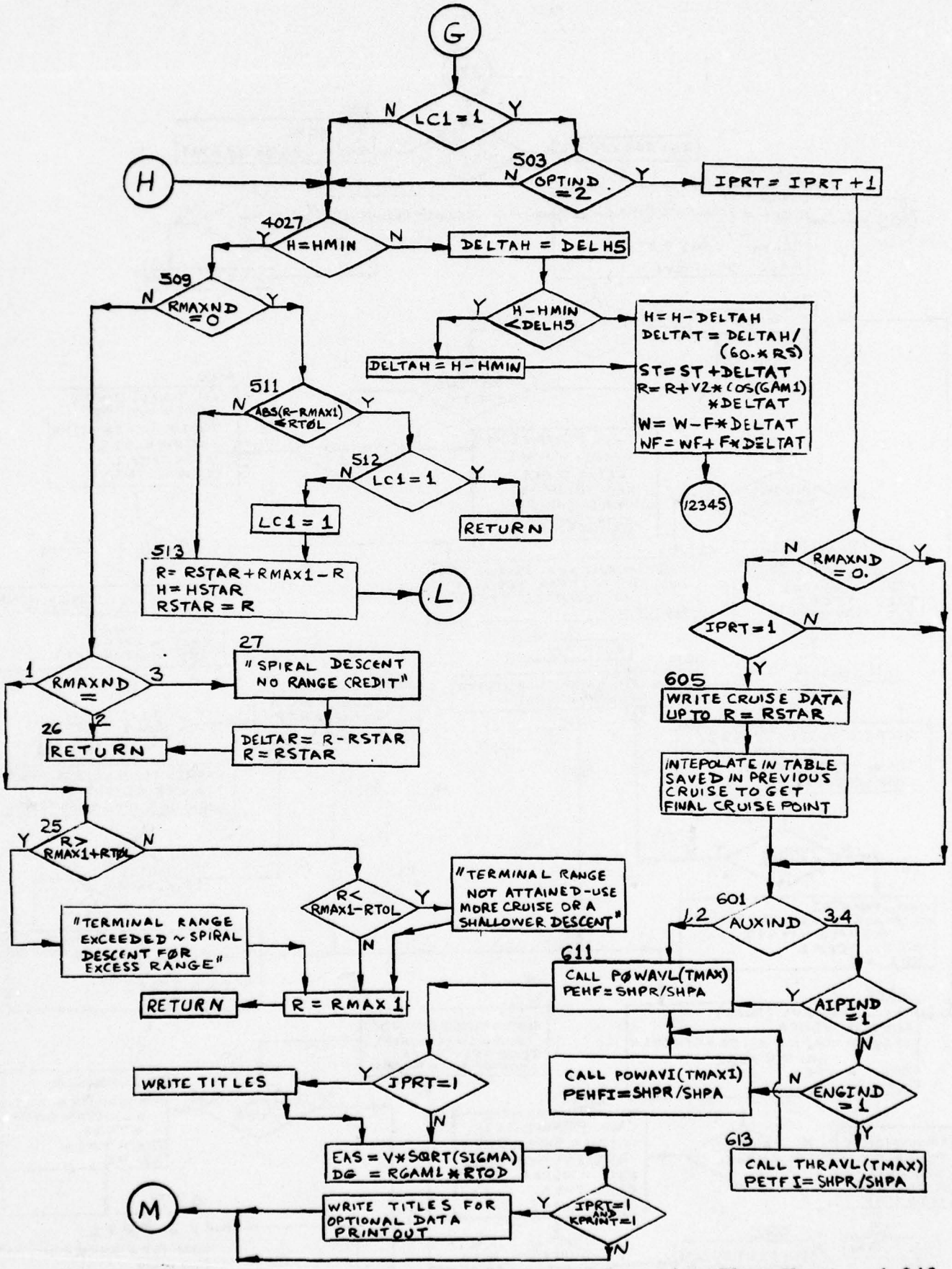

Figure 4-49. Descent Calculations Subroutine Flow Chart (Part 5 of 6). 4-260

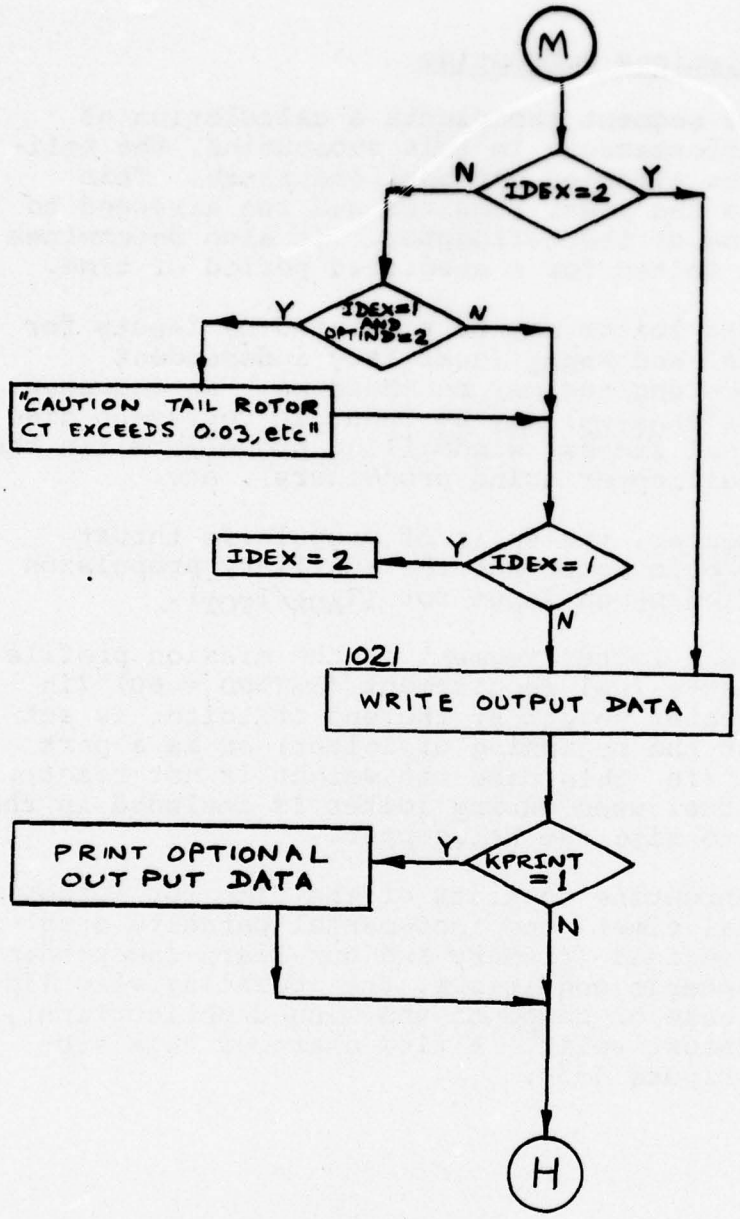

Figure 4-49. Descent Calculations Subroutine Flow Chart (Part 6 of 6).

4.12.6 Loiter Calculations Subroutine

The sixth performance segment represents a calculation of helicopter loiter performance. In this subroutine, the helicopter will fly at the airspeed for best endurance. This subroutine calculates the power required and the airspeed to maximize the endurance of the helicopter. It also determines the fuel required to loiter for a specified period of time.

Engine shutdown during loiter may be simulated by inputs for N_{PSD} (primary engines) and N_{PSDi} (auxiliary independent engines). One or more engines may be shutdown. An increment in helicopter drag (ΔFe_{LOITER}) may be input to represent drag changes due to external stores, windmilling propellers (in the case of a compound helicopter using propellers), etc.

For a compound helicopter, the split of propulsive thrust required between the main rotor and the auxiliary propulsion system may be specified by an input for (T_{AUX}/T_{TOT}).

It is possible to use a loiter segment in the mission profile to account for a reserve fuel requirement (SGTIND = 60) (in such case the helicopter weight at the end of loiter is set back to the weight at the beginning of loiter) or as a part of the basic mission (in this case the weight is not reset). In either case, the fuel used during loiter is included in the total fuel required to size the helicopter.

The input to this subroutine consists of the time for loiter, step size (incremental time), the incremental parasite drag area, the number of engines (primary and auxiliary independent) shut down, the atmospheric conditions, the operating wing lift coefficient (in the case of compound and winged helicopters), and the propulsive thrust split. A flow chart of this subroutine is shown in Figure 4-50.

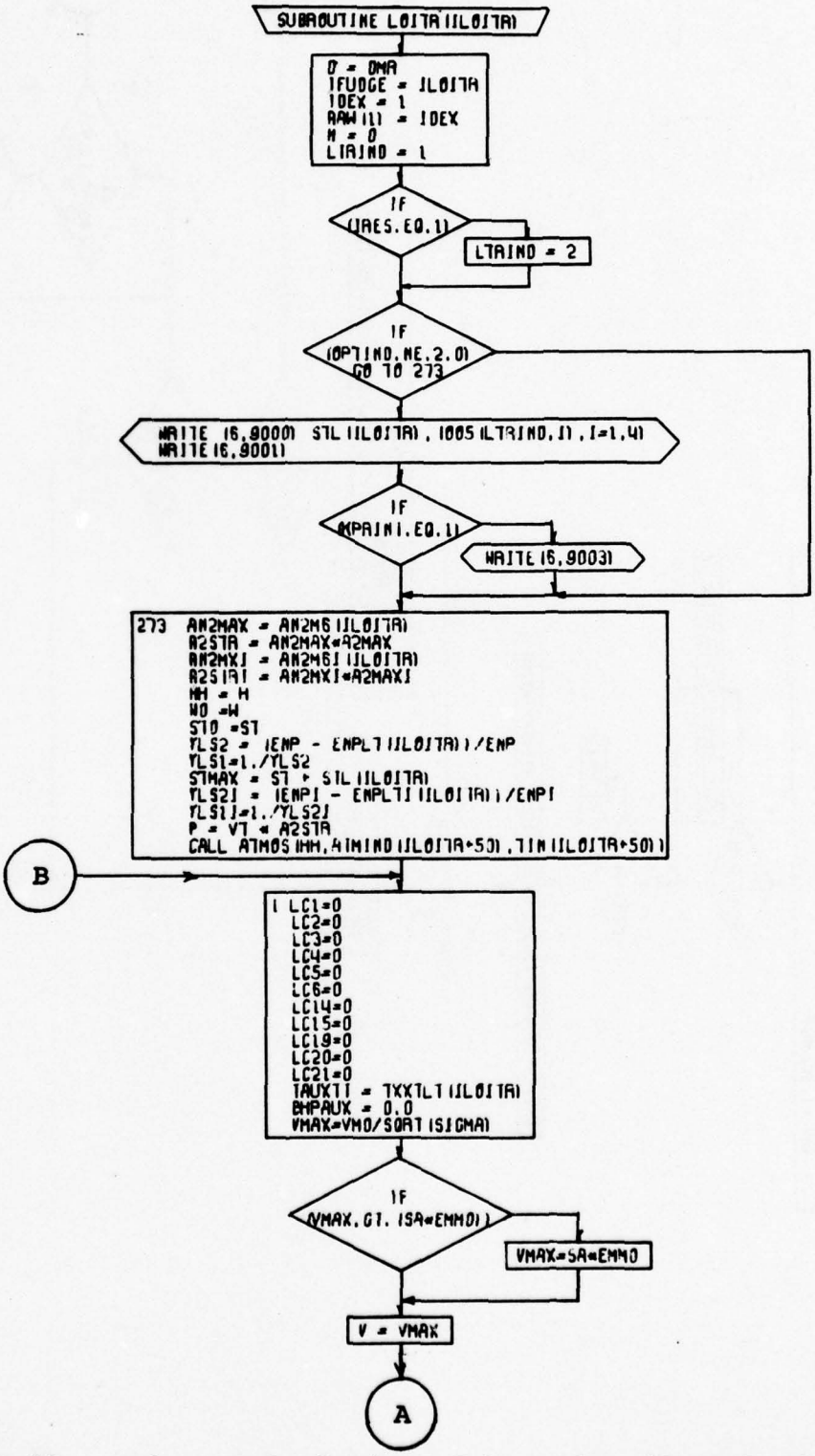

Figure 4-50. Loiter Calculations Subroutine (Part 1 of 7).

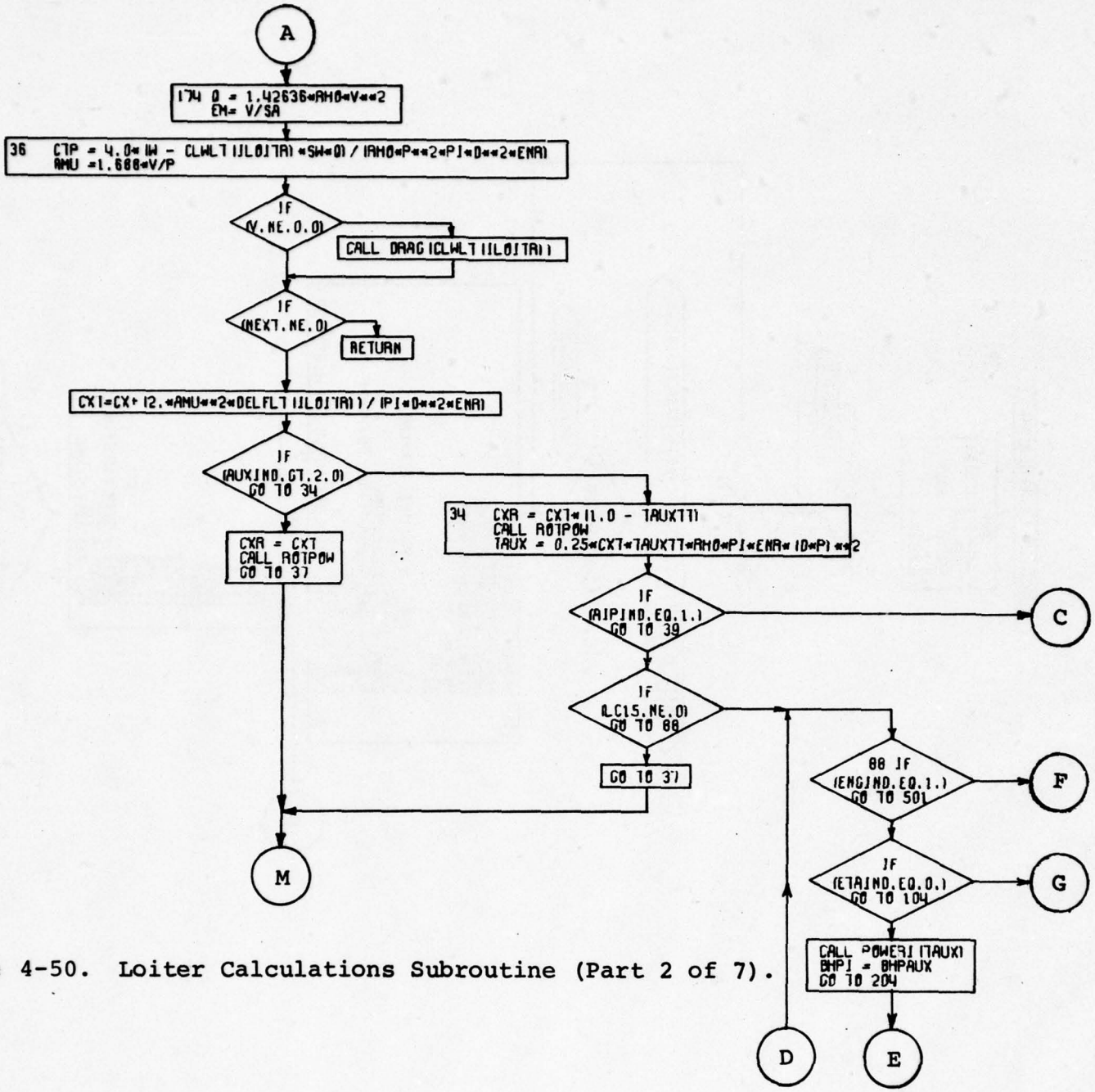

Figure 4-50. Loiter Calculations Subroutine (Part 2 of 7).

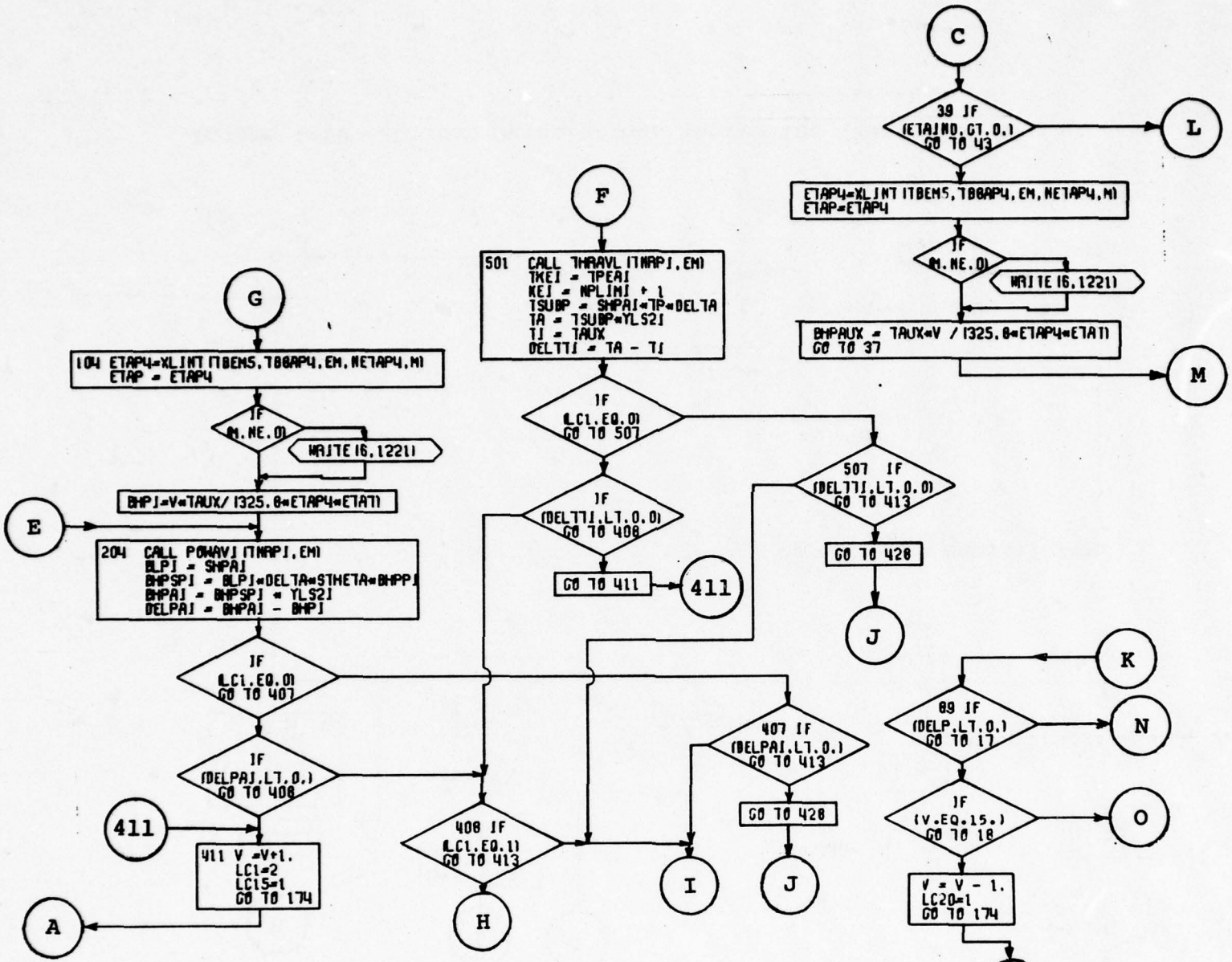

Figure 4-50. Loiter Calculations Subroutine (Part 3 of 7).

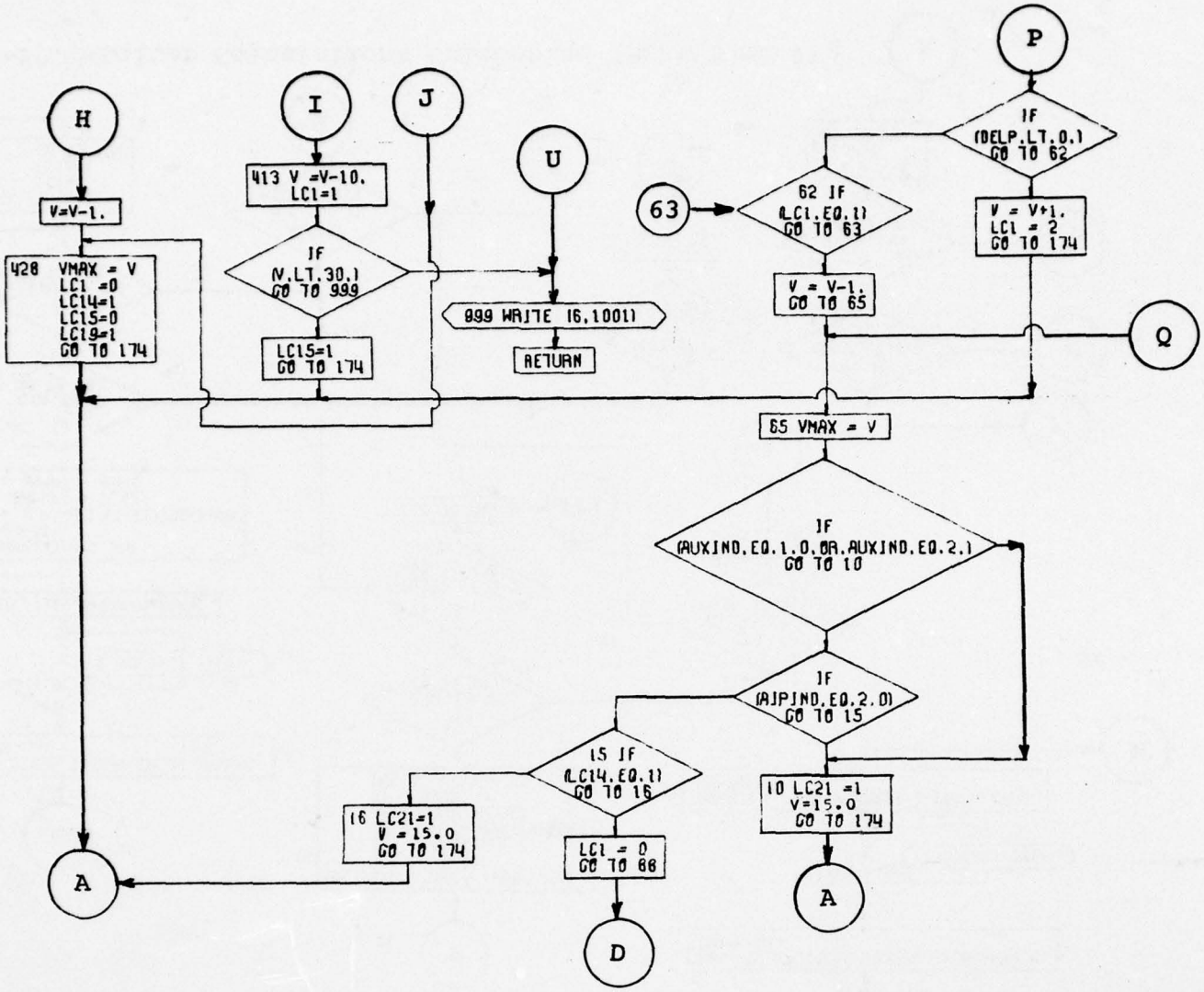

Figure 4-50. Loiter Calculations Subroutine (Part 4 of 7).

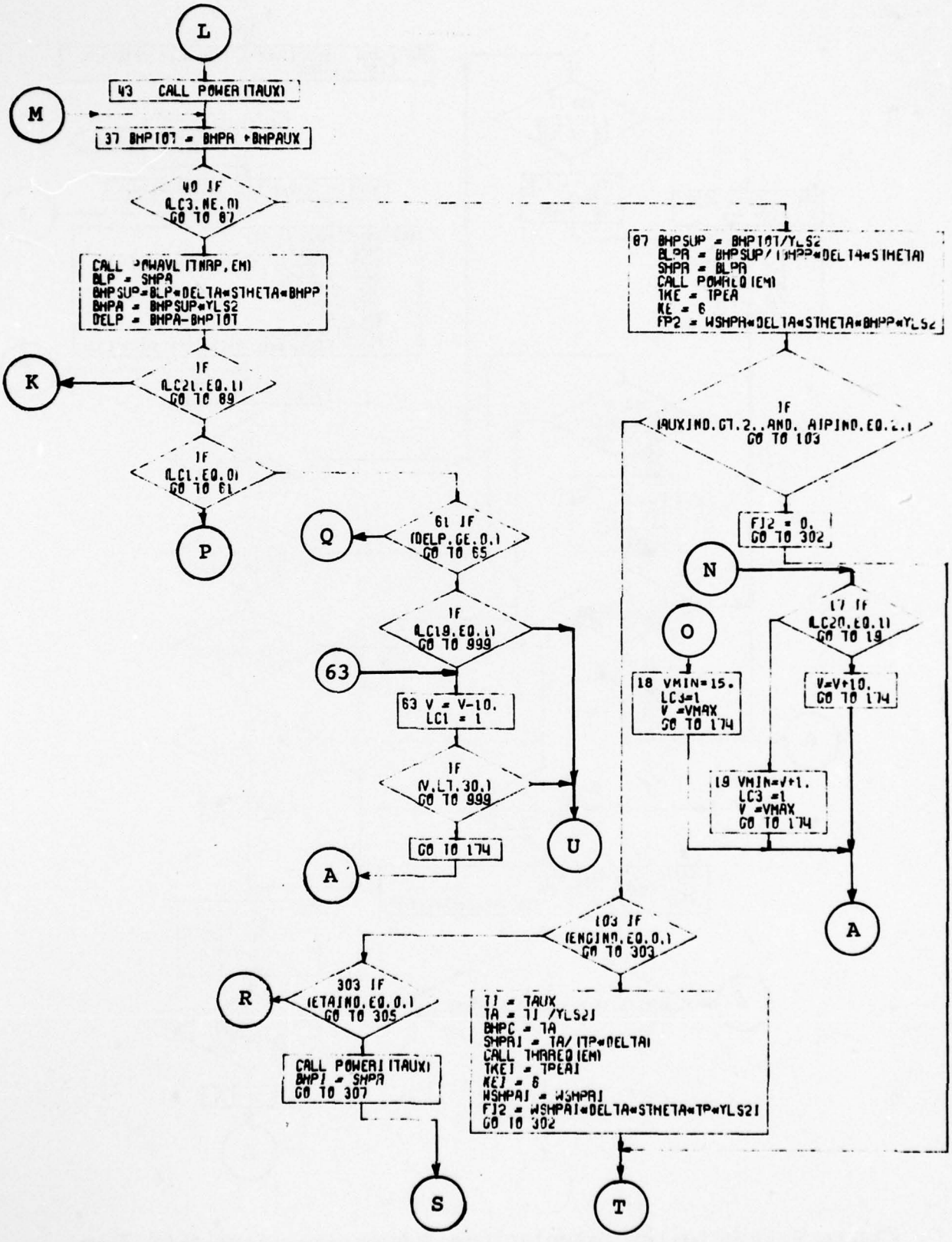

Figure 4-50. Loiter Calculations Subroutine (Part 5 of 7).

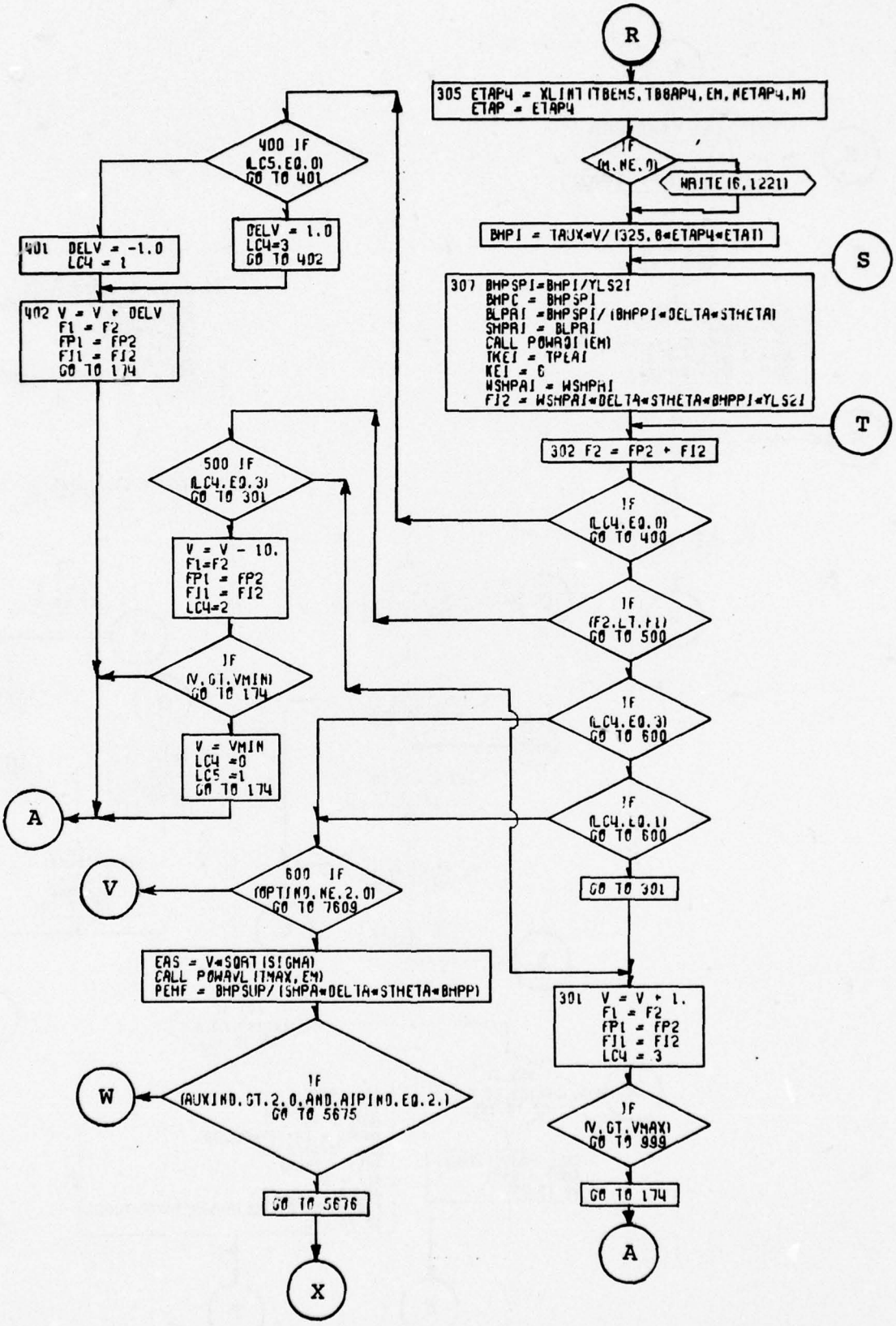

Figure 4-50. Loiter Calculations Subroutine (Part 6 of 7).

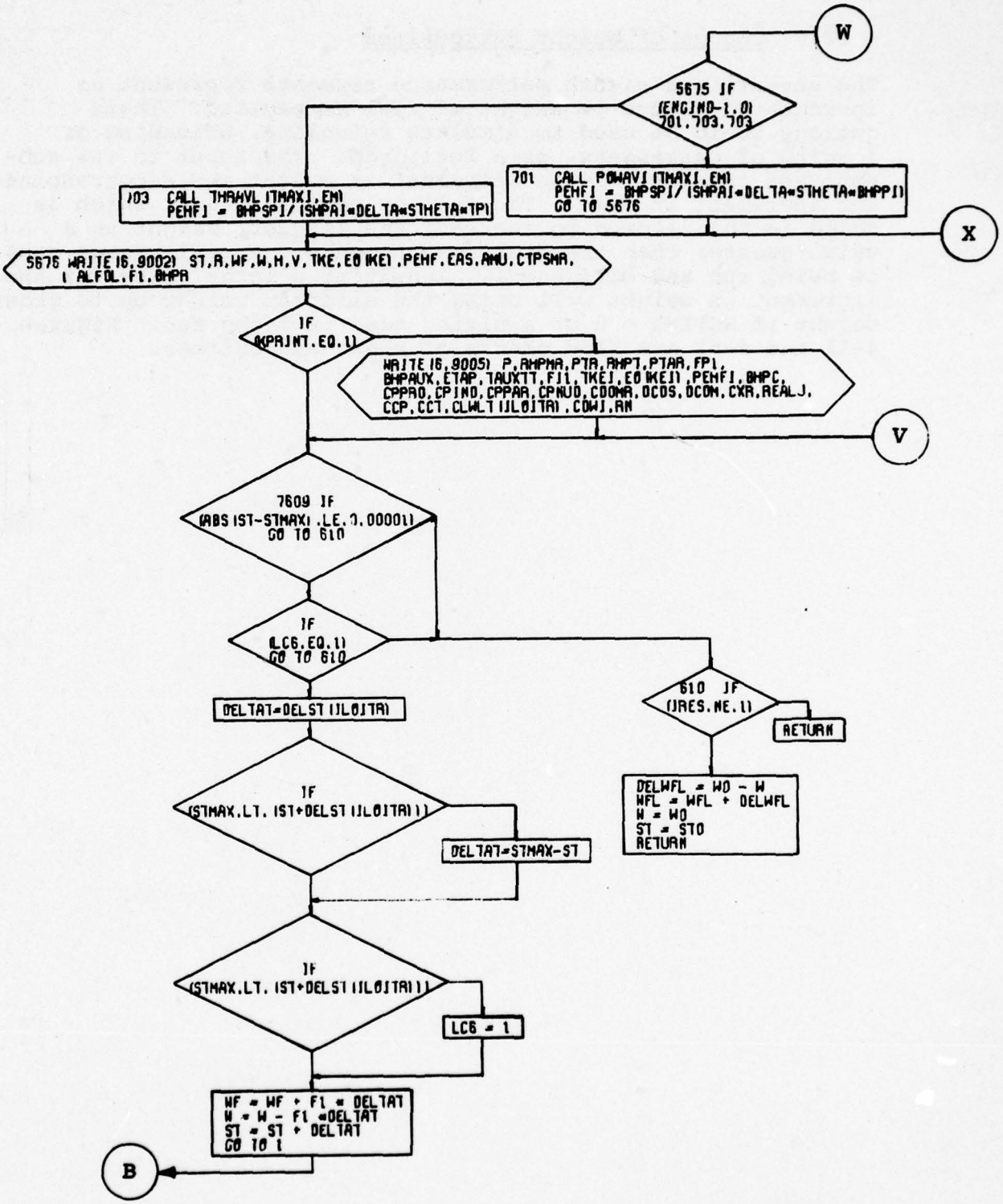

Figure 4-50. Loiter Calculations Subroutine (Part 7 of 7).

4.12.7 Change of Weight Subroutines

The seventh and eighth performance segments represent an incremental change in weight of fuel or payload. These options would be used to simulate refueling, unloading or loading of passengers, or a fuel drop. The input to the subroutines consists of the increment in weight and a corresponding increment in time. The fuel or payload weight which is added is not allowed to increase the aircraft weight to a value greater than the gross weight unless a performance case is being run and WGTIND = 1. Inputting a large value for the increment in weight will bring the aircraft weight up to gross weight if WGTIND = 0 or a sizing case is being run. Figures 4-51 and 4-52 are flow charts of these subroutines.

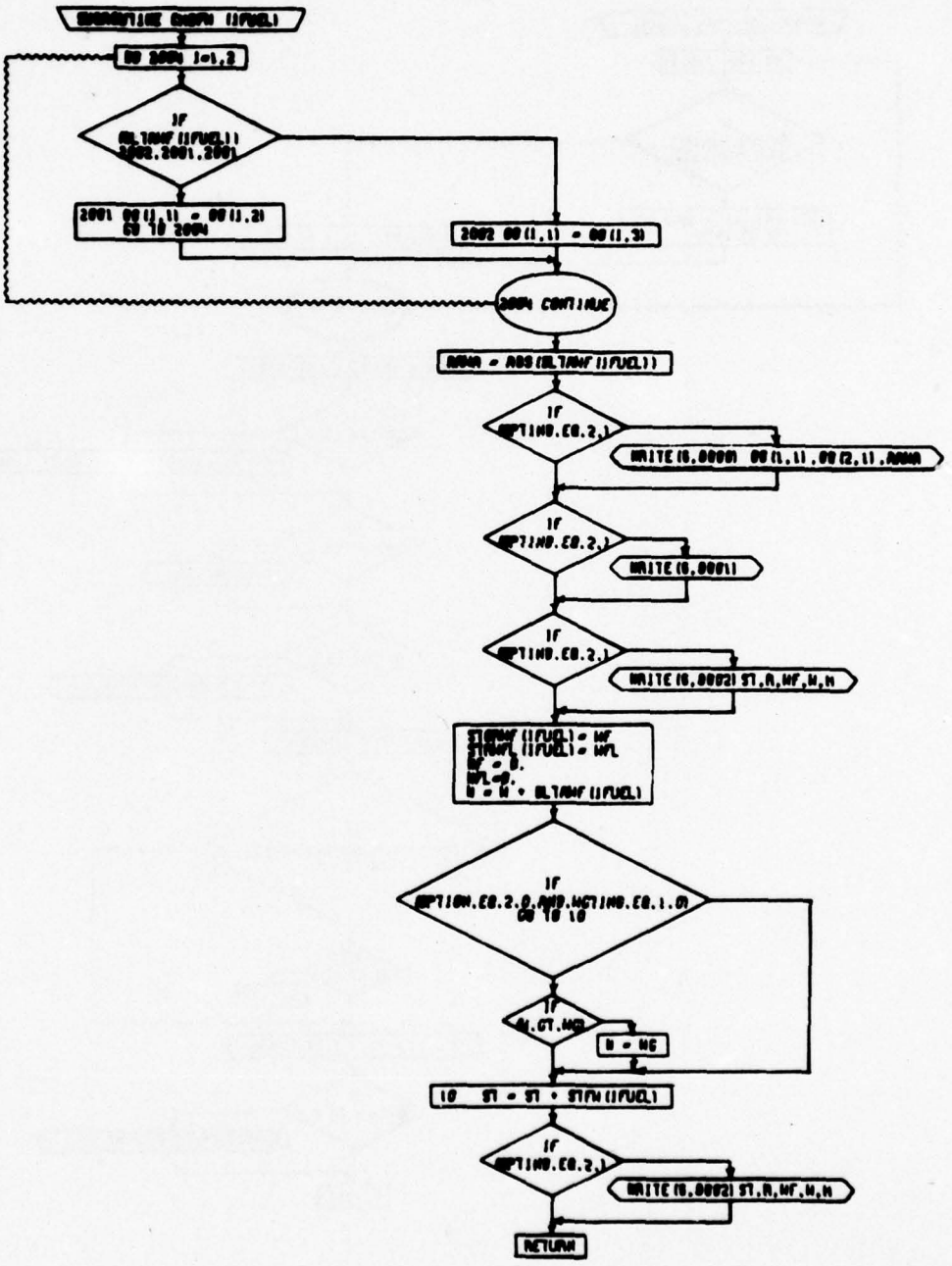

Figure 4-51. Change of Fuel Weight Subroutine, Flow Chart.

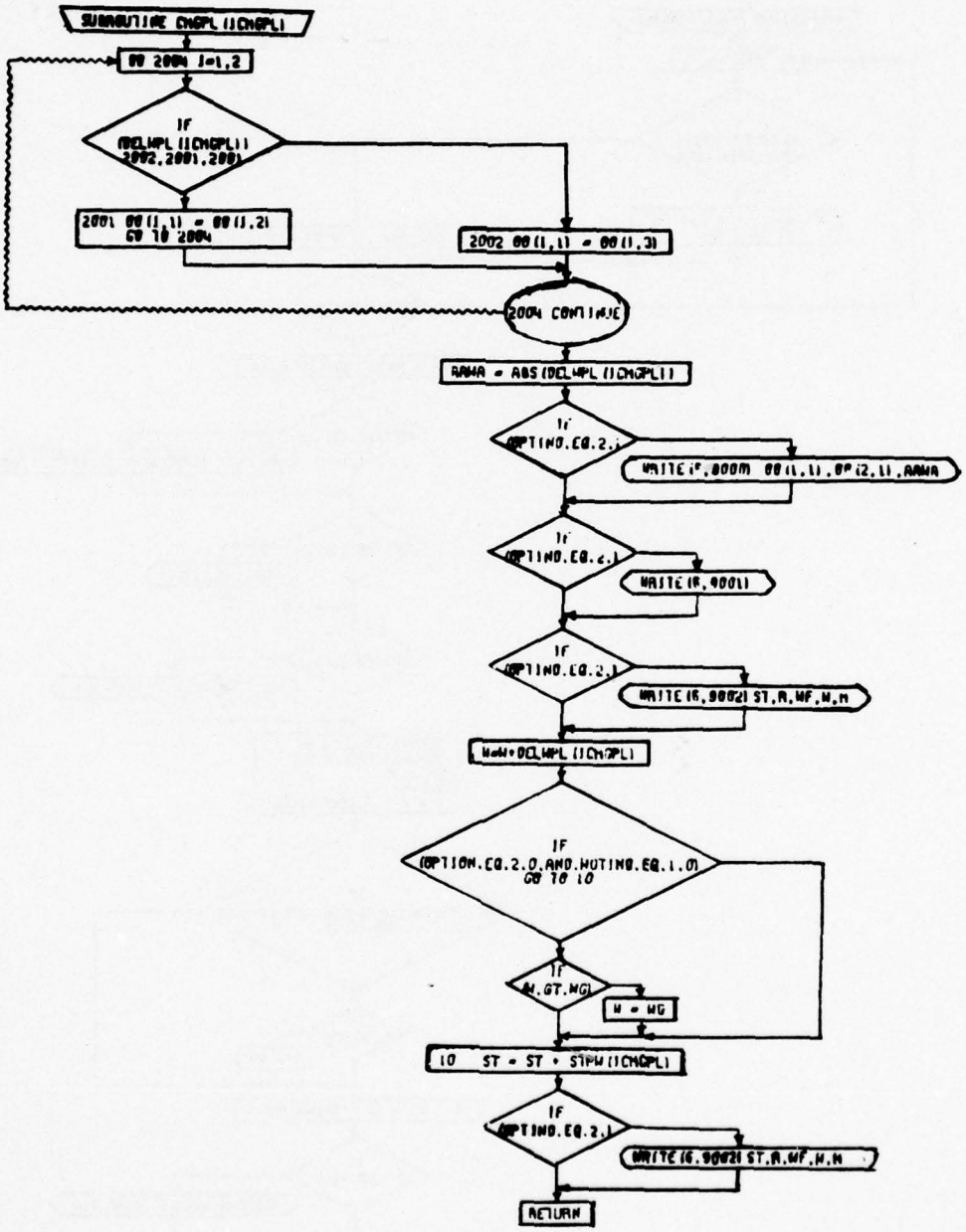

Figure 4-52. Change of Payload Weight Subroutine, Flow Chart.

4.12.8 Transfer Altitude

There are many different applications for which a discontinuous change in altitude may be desirable:

1. The flight profile may require takeoff at hot day, high altitude conditions followed by climb from sea level to specified altitude for standard day conditions.

2. It may be required that no credit be taken for range, fuel, or distance during descent (for example, Reference 9).

3. It may be required to study cruise speed at specified power at a series of different altitudes. This can be accomplished by a series of very short cruise segments interspersed with altitude transfers.

For these and other reasons, the program includes a transfer altitude segment, specified by SGTIND = 9. The only required input is the altitude to which the aircraft is to be transferred.

Transfer altitude may also be used during an optimum altitude search when it is followed by a cruise. In that case, the altitude which is input represents the maximum altitude permitted for the subsequent cruise.

Figure 4-53 is a flow chart of this subroutine.

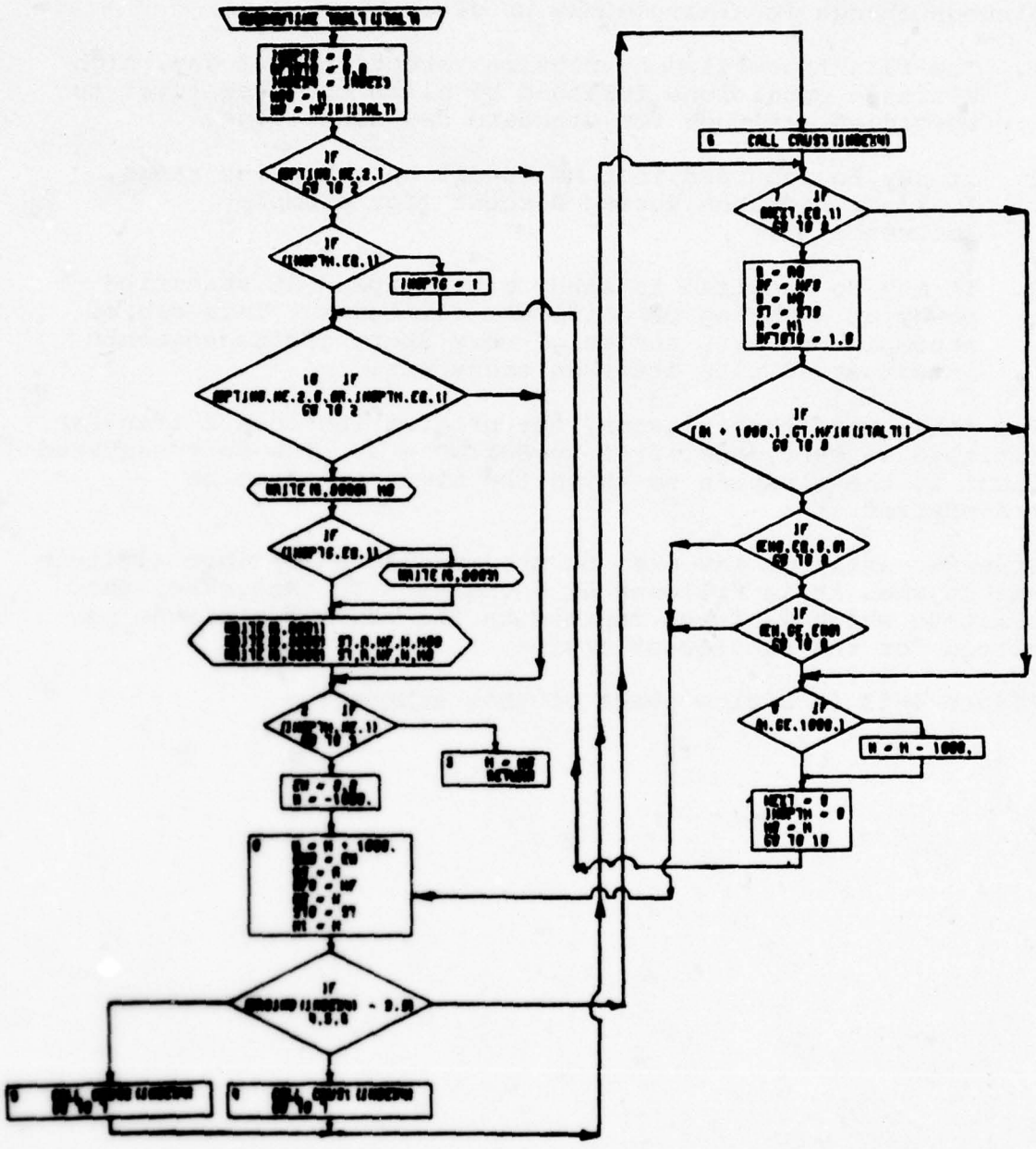

Figure 4-53. Transfer Altitude Subroutine, Flow Chart.

5.0 PROGRAM INPUT

5.1 GENERAL

Input to the program is made by means of a standard set of input sheets. Although there are large quantities of possible input, necessitated by the requirement to keep the program flexible and general, the input sheets have been configured to give maximum visibility and reduce the tediousness of inputting the data. This has been accomplished through several means:

1. All input of a similar nature has been grouped together. Thus, all dimensional information is on the same input sheet, regardless of whether it is used in the size trends subroutine or elsewhere.

2. The input sheets have been color-coded to distinguish between the data required in the sizing option (OPTIND = 1) and the much smaller amount of data required for performance calculations (OPTIND = 2 or 3).

3. Footnotes on the input sheets call attention to input which is not required due to selection of one of the optional paths of computation.

4. For parametric studies where only one or two variables are being changed from case to case, a special supplementary input sheet may be used, thus reducing the quantity of paper work.

Altogether there are 36 different input sheets which can be loosely grouped into seven categories: general information, aircraft descriptive information, mission profile information, engine cycle information, rotor data, propeller data, and supplementary information. A specimen copy of each input sheet is included in this section. Descriptions of input variables and indicators are given in paragraphs 5.3.1 and 5.3.2. The use of the various input sheets is discussed below in paragraphs 5.1.1 and 5.1.2.

5.1.1 General Information

Input all primary program indicators (except those for specific mission segments, such as CRSIND), mission initial conditions, reserve fuel factors, and maneuver load factor.

5.1.2 Aircraft Description Information

5.1.2.1 Dimensional Information - Input characterisitc geometric information for aircraft being studied.

5.1.2.2 Propulsion Information - Input data for numbers of primary and auxiliary independent propulsion engines, propellers, propeller cruise efficiencies, etc., and critical engine sizing conditions. There are three different input sheets for propulsion information: one for the primary engines (always used) and two for use with compound and auxiliary propulsion helicopter configurations. Of these two, one sheet is for propeller data and the other for auxiliary independent propulsion engine data.

5.1.2.3 Aerodynamics Information - Input aircraft drag characteristic and (in the case of compound and winged helicopters) wing section lift/drag characteristics.

5.1.2.4 Weight Information - Input the factors and constants for weight trends calculations.

5.1.3 Mission Profile Information

There are seven input sheets for mission profile information. They are:

1. Taxi Information
2. Takeoff, Hover, and Landing Information
3. Climb Information
4. Cruise Information
5. Descent Information
6. Loiter Information
7. Change of Weight and Transfer Altitude Information (incorporating change of fuel weight, change of payload weight, and transfer altitude)

Each input variable on the mission profile sheets is represented by an array of ten input locations. The data for these locations is filled in sequentially by rows as the particular mission segment is used. For example, the first time that taxi is used in a particular case, the required input information is filled in on the first row of the input sheet. Data for the second taxi of a case is filled in on the second row, and so on. Thus, up to ten of any particular segment may be used in a case.

5.1.4 Engine Cycle Information

The engine cycle sheets may be used to input engine cycle data when one of the standard engine cycles is not used. The three engine cycle sheets are divided into standard performance information and nonstandard performance information. The standard performance data, of which there are two sheets, represent the performance of idealized engine cycles. These data are unlimited except for the effect of engine ratings, which are dictated by values of turbine temperature. The nonstandard

performance represents limiting values of fuel flow, torque, rpm and other nonstandard effects. It should be noted that auxiliary independent engine input data can be created from the HESCOMP engine cycle library data simply by the input of the applicable engine cycle IBM card deck, preceded and followed by a "66666" card. Nonstandard auxiliary independent engine performance is input using the sheet provided for that purpose.

5.1.5 Propeller Performance Data

The propeller performance sheets may be used to input data for a specific propeller when using η_pIND = 1. The data is input as a table of C_P as a function of C_T and J.

5.1.6 Rotor Performance Data

Rotor performance data can be input in two ways. If the short form "aero" performance computation method is used (ROTIND = 1), rotor data is input using the rotor "cycle" input sheet. Alternatively, rotor performance data may be input in "map" form (ROTIND = 2, 3 in the case of Type I "maps" and ROTIND = 4 for Type II "maps") using the ten input sheets (combined total of Type I and II inputs) provided for this purpose. The first sheet is for hover performance data which is input as a table of C_{P_H}/σ as a function of C_T/σ and M_{TIP} in the case of Type I "map" and F.M. as a function of C_T/σ and M_{TIP} in the case of the Type II "map". The remaining four sheets are for cruise performance data which is input as a table of C_P/σ as a function of μ, C_T'/σ, and C_X/σ for the Type I "map" and L/D$_E$ as a function of μ, C_T'/σ, and X/L for the Type II "map".

5.1.7 Supplementary Information

The supplementary input sheet may be used for the second and subsequent cases of a parametric study. For example, in the case of a tandem rotor helicopter, if the user wishes to change both the rotor overlap/diameter ratio (location 0132 - see dimensional information sheet) and the disc loading (location 0173 - see dimensional information sheet), these locations and their new values may be filled in on the supplementary input sheet.

Two typical problems, from input to output, are discussed in Section 7.6 of this manual.

BOEING VERTOL COMPANY
A DIVISION OF THE BOEING COMPANY

HESCOMP HELICOPTER SIZING AND PERFORMANCE COMPUTER PROGRAM B-91

SHEET NO. OF	CASE NO.

GENERAL INFORMATION

TITLE CARD (72) (DIGITS)

7 10 13 16 19 22 25 28 31 34 37 40 42
43 46 49 52 55 58 61 64 67 70 73 76 78

	VARIABLE	UNIT	LOC.	VALUE	
OPTION INDICATOR	OPTIND		0001		1 = SIZE AIRCRAFT 2 = PERFORMANCE ONLY 3 = FUEL ITERATION
PRINT INDICATOR	OPTIONAL PRINT		0002		0 = STD PRINT 1 = DETAILED PRINT
AERO-DYNAMICS INDICATORS	DRGIND		0003		1 = COMPONENT DRAG BUILD-UP 2 = (GW/Fe) DRAG TREND
	OSWIND		0004		0 = INPUT e 1 = PROG. CALC. e
1ST ORDER SIZE TREND AND PRO-PULSION INDICATORS (ALWAYS INPUT)	CNFIND		0005		1 = SINGLE ROTOR 2 = TANDEM ROTOR
	AUXIND		0006		1 = PURE HELICOPTER 2 = INCLUDING WINGS (ONLY) 3 = INCL. AUX. PROPULSION (ONLY) 4 = COMPOUND (WINGS & AUX. PROP) — 1st
	RDMIND		0007		1 = INPUT D_{MR}, σ 2 = INPUT D_{MR}, C_T/σ W/A, σ 3 = INPUT D_{MR}, C_T/σ W/A, C_{ℓ}/σ — 2nd
	FIXIND		0008		0 = INPUT FIXED SIZE PRIM. ENG. 1 = PROG. SIZE PRIM. ENG. — 3rd
	ROTIND		0009		1 = SHORT FORM ROTOR PERF. 2,3 = ROTOR MAP INPUT — 4th
2ND ORDER SIZE TREND AND PRO-PULSION INDICATORS (OPTIONAL INPUT)	S_WIND	NOTE a	0010		1 = INPUT S_W 2 = INPUT W/S 3 = SIZE FOR MANEUVER — 5th
	b_WIND	NOTE a	0011		1 = INPUT b_W/D 2 = INPUT AR 3 = DETER BY PROP CLEAR — 6th
	AIPIND	NOTE b	0012		1 = NO INDEP. AUX. ENGINES 2 = INDEP. AUX. ENGINES — 7th
	ENGIND	NOTE c	0013		0 = T/SHAFT INDEP. AUX. ENG. 1 = T/FAN OR T/JET INDEP. AUX. ENG. — 8th
	FIXINDI	NOTE c	0014		0 = INPUT FIXED SIZE AUX. INDEP. ENG. 1 = PROG. SIZE AUX. INDEP. ENG. — 9th
	TRDIND	NOTE d	0015		1 = PROG. USES D_{TR} TREND 2 = INPUT D_{TR} 3 = INPUT (T/A) NET — 10th
	TRSIND	NOTE d	0016		1 = INPUT σ_{TR} 2 = INPUT C_T/σ — 11th
	VTFIND	NOTE d	0017		1 = INPUT AR_{VT}, ζ_{VT} 2 = INPUT $C_{L_{DES}}$, V_{DES}, ζ_{VT} 3 = INPUT $C_{L_{DES}}$, V_{DES}, AR_{VT} — 12th
	HTIND	NOTE d	0018		0 = NO HOR. TAIL 1 = FIXED SIZE HOR. TAIL 2 = INPUT TAIL VOL. COEFF. — 13th
	MRPIND	NOTE d	0019		0 = INPUT x_M/l_B 1,2 = PROG. CALC x_M/l_B — 14th
	FDMIND	NOTE g	0020		1 = INPUT((o/L)/D), ROTOR POSN'S 2 = INPUT((o/L)/D), l_C 3 = INPUT l_C, ROTOR POSN'S — 15th
	APHIND	NOTE e	0021		1 = INPUT h_{P_2} 2 = INPUT g/S — 16th
	ESCIND	NOTE f	0022		1 = SIZE PRIM. ENG. FOR T/O ONLY 2 = SIZE PRIM. ENG. FOR T/O OR CRUISE — 17th
INITIAL CONDITIONS	WG_0	LBS	0023		GROSS WEIGHT — 18th
	h_0	FT	0024		ALTITUDE — 19th
	R_0	NM	0025		RANGE — 20th
	t_0	HR	0026		TIME — 21st
FLIGHT PATH CONTROL INDICATOR	$h_{OPT_{IND}}$		0027		0 = CRUISE @ SPECIFIED ALT. 1 = CRUISE @ OPT. ALT. — 22nd
LIMITING SPEED	M_{MO}		0028		MACH NO. — 23rd
	V_{MO}	KTS EAS	0029		EAS — 24th
	V_{DIVE}	KTS EAS	0030		— 25th
MANEUVER LOAD FACTOR	M_{LF}		0031		
RESERVE FUEL FACTORS	K_I		0032		NOM. = 1.0
	δW_F	LBS	0033		NOM. = 0.0
	K_{FF}		0034		FUEL FLOW MULTIPLIER NOM. = 1.0

MISSION PROFILE INFORMATION

MAXIMUM OF 50 CONSECUTIVE SEGMENTS

VALUES OF SGTIND

0 = END OF MISSION
1 = TAXI
2 = T.O., HOVER, LAND
3 = CLIMB
4 = CRUISE
5 = DESCENT
6 = LOITER
7 = CHANGE FUEL
8 = CHANGE PAYLOAD
9 = TRANSFER ALTITUDE
100 = END OF CASE

	LOC.	VALUE		LOC.	VALUE
1st	0035		26th	0060	
2nd	0036		27th	0061	
3rd	0037		28th	0062	
4th	0038		29th	0063	
5th	0039		30th	0064	
6th	0040		31st	0065	
7th	0041		32nd	0066	
8th	0042		33rd	0067	
9th	0043		34th	0068	
10th	0044		35th	0069	
11th	0045		36th	0070	
12th	0046		37th	0071	
13th	0047		38th	0072	
14th	0048		39th	0073	
15th	0049		40th	0074	
16th	0050		41st	0075	
17th	0051		42nd	0076	
18th	0052		43rd	0077	
19th	0053		44th	0078	
20th	0054		45th	0079	
21st	0055		46th	0080	
22nd	0056		47th	0081	
23rd	0057		48th	0082	
24th	0058		49th	0083	
25th	0059		50th	0084	

NOTES: INPUT ONLY IF:
a. AUXIND = 2,4
b. AUXIND = 3,4
c. AIPIND = 2
d. CNFIND = 1
e. CNFIND = 2
f. FIXIND = 1

NOTE: WHEN OPTIND = 2 OR 3 CONSIDER ONLY THOSE ITEMS IN THE SHADED BLOCKS

FORM 53110 (11/73)

PRECEDING PAGE NOT FILMED

HELICOPTER DIMENSIONAL INFORMATION

NOTE: WHEN OPTIND = 2 OR 3 CONSIDER ONLY THOSE ITEMS IN THE SHADED BLOCKS

WING

NOTE	VARIABLE	UNIT	LOC.	VALUE
a	S_W	FT^2	0101	
b	W/S	PSF	0102	
c	b_W/D		0103	
d	AR		0104	
	$(t/c)_R$		0105	
	$(t/c)_T$		0106	
	$\Lambda_{C/4}$	DEG	0107	
	λ		0108	
e	C_F/C		0109	
	h'/h_F		0110	
f	C_{L_D}		0111	

NOM = 1.0

HOR. TAIL

NOTE	VARIABLE	UNIT	LOC.	VALUE
	AR_{HT}		0112	
	l_{TH}'		0113	
	$(t/c)_{HT}$		0114	
g	$\bar{V}_H$		0115	
	λ_H		0116	
h	S_{HT}	FT^2	0117	

AUX. PROP.

NOTE	VARIABLE	UNIT	LOC.	VALUE
i	Y_{CL}	FT	0118	
i	ζ_2		0119	

(IF LOCATED ON WING)

GEN.

NOTE	VARIABLE	UNIT	LOC.	VALUE
	$\Delta S_{WET}/S_F$		0120	
	ΔS_{WET}	FT^2	0121	

BODY

NOTE	VARIABLE	UNIT	LOC.	VALUE
	h_F	FT	0122	
	W_F	FT	0123	
	$(l/d)_P$		0124	
	$(l/d)_T$		0125	
	l_C	FT	0126	
	l_{RW}	FT	0127	
j	(X_M/l_B)		0128	
k	$(l_{TB}/d_{\overline{TB}})$		0129	
k	$(d_{\overline{TTB}}/d_{\overline{TB}})$		0130	
k	$k_{T\ STING}$		0131	
l	$(t_O/L)/D)$		0132	
m	$(\Delta x_1/l_P)$		0133	
m	$(\Delta x_2/l_T)$		0134	

VERT. TAIL

NOTE	VARIABLE	UNIT	LOC.	VALUE
n	AR_{VT}		0135	
	λ_{VT}		0136	
	$(t/c)_{VT}$		0137	
p	ζ_{VT}		0138	
	K_z		0139	
q	$C_{L_{DES}}$		0140	
q	V_{DES}	KTS TAS	0141	

PRIM. ENG. NAC.

NOTE	VARIABLE	UNIT	LOC.	VALUE
	γ_1		0142	
	γ_2		0143	
	γ_3		0144	
	(l_{AIP}/l_C)		0145	

AUX. IND. ENG. NAC.

NOTE	VARIABLE	UNIT	LOC.	VALUE
r	γ_4		0146	
r	γ_5		0147	
r	γ_6		0148	
r	(l_{AIA}/l_{eA})		0149	
r	$\Delta S/S_{STR}$		0150	
r	$b_{NS}/d_{\overline{NI}}$		0151	

NOTES: INPUT NOT NECESSARY WHEN:

a. S_WIND = 2,3
b. S_WIND = 1,3
c. b_WIND = 2,3
d. b_WIND = 1,3
e. AUXIND = 1,3
f. S_WIND = 1,2
g. HTIND = 1
h. HTIND = 2
i. b_WIND = 1,2
j. MRPIND = 1,2
k. CNFIND = 2
l. FDMIND = 3
m. FDMIND = 2
n. VTFIND = 2
p. VTFIND = 3
q. VTFIND = 1
r. AIPIND = 2

PRECEDING PAGE NOT FILMED

HELICOPTER DIMENSIONAL INFORMATION

NOTE: WHEN OPTIND = 2 OR 3 CONSIDER ONLY THOSE ITEMS IN THE SHADED BLOCKS

FWD. ROTOR PYLON †

NOTE	VARIABLE	UNIT	LOC.	VALUE
	$(t/c)R_F$		0152	
	$(t/c)T_F$		0153	
	AR_{FP}		0154	
	λ_{FP}		0155	
	h_{p_1}	FT	0156	

AFT ROTOR PYLON

NOTE	VARIABLE	UNIT	LOC.	VALUE
	$(t/c)R_A$		0157	
	$(t/c)T_A$		0158	
	AR_{AP}		0159	
	λ_{AP}		0160	
a	h_{p_2}	FT	0161	
b	g/s		0162	

† ~ IN THE CASE OF THE SINGLE ROTOR HELICOPTER, THIS BECOMES THE MAIN ROTOR PYLON

NOTES: INPUT NOT NECESSARY IF:

a. APHIND = 2
b. APHIND = 1

PRECEDING PAGE NOT FILMED BLANK

ROTOR DIMENSIONAL DATA FOR SIZING MAIN ROTOR(S)

ROTOR MAP NO.	0170	
ROTOR CYCLE NO.	0171	

NOTE: WHEN OPTIND = 2 OR 3 CONSIDER ONLY THOSE ITEMS IN THE SHADED BLOCKS.

ROTOR CHARACTERISTICS

NOTE	VARIABLE	UNIT	LOC.	VALUE
†	N_R		0172	
a	W/A	PSF	0173	
b	D_{MR}	FT	0174	
c	σ_{MR}		0175	
	b_{MR}		0176	
	$\theta_{T_{MR}}$	DEG	0177	
	$X_{C_{MR}}$		0178	
	X_{MR}		0179	
	(t/c) .25R		0180	
	V_{TIP}	FPS	0181	

† IF NO. OF ROTORS = 1, MUST ADD TAIL ROTOR SIZING SHT.

ROTOR VERTICAL R/C EFFICIENCY FACTORS

	V_{CEH1}		0191	
	V_{CEH2}		0192	

INCREMENTAL ROTOR FIGURE OF MERIT INPUT

	Δ F.M.		0195	

HOVER COND. FOR ROTOR SIZING

d	$(C_T/\sigma)_H$		0182	
d	T/W		0183	

CRUISE COND FOR ROTOR SIZING

	$V_{KT}(c)$	KTS TAS	0184	
	$h_C(c)$	FT	0185	
	ΔTINC	°F	0186	
d	$(C_T/\sigma)_{CR}$		0187	
	g REQM'T		0188	
	g (ROTOR)		0189	
	N (ROTOR LOADING)		0190	

ROTOR CLIMB & DESCENT EFFICIENCIES

	$K_{P\ CLIMB}$		0193	
	$K_{P\ DESCENT}$		0194	

NOTES: INPUT NOT NECESSARY WHEN
a. RDMIND = 1,3
b. RDMIND = 2,4
c. RDMIND = 3,4
d. RDMIND = 1,2

PRECEDING PAGE NOT FILMED
BLANK

ROTOR DIMENSIONAL DATA FOR SIZING TAIL ROTOR (CNFIND = 1)

NOTE: WHEN OPTIND = 2 OR 3 CONSIDER ONLY THOSE ITEMS IN THE SHADED BLOCKS.

TAIL ROTOR CHARACTERISTICS

NOTE	VARIABLE	UNIT	LOC	VALUE
a	(T/A) NET	PSF	0200	
b	D_{TR}	FT	0201	
c	σ_{TR}		0202	
	b_{TR}		0203	
	$\theta_{T_{TR}}$	DEG	0204	
	$X_{C_{TR}}$		0205	
	X_{TR}		0206	
	V_{TTR}	FPS	0207	

TAIL ROTOR SIZING COND.

NOTE	VARIABLE	UNIT	LOC	VALUE
d	$(C_T/\sigma)_{DES\ (H)}$		0208	
	YAW ACCEL ($\ddot{\psi}$)	$\frac{RAD}{SEC^2}$	0209	
	YAW RATE ($\dot{\psi}$)	$\frac{RAD}{SEC}$	0210	
e	$(C_{T_G}/C_{T_{NET}})$		0211	
e	$\bar{C}$		0212	
d	Kzzz		0213	
	$\ell_{MR/TR}$	FT	0214	
d	K_{TRS}		0215	

NOTES:
a. INPUT NOT NECESSARY WHEN TRDIND = 1.2
b. INPUT NOT NECESSARY WHEN TRDIND = 1.3
c. INPUT NOT NECESSARY WHEN TRSIND = 2
d. INPUT NOT NECESSARY WHEN TRSIND = 1
e. IF OPTIND = 1, $(C_{T_G}/C_{T_{NET}})$ MAY BE INPUT AS 1.00, AND A VALUE OF $\bar{C}$ INPUT, PROGRAM WILL THEN CALCULATE A VALUE OF $(C_{T_G}/C_{T_{NET}})$. IF VALUE OF $(C_{T_G}/C_{T_{NET}}) > 1.0$ INPUT, IT IS NOT NECESSARY TO INPUT $\bar{C}$.

NOTE	VARIABLE	UNIT	LOC	VALUE
	$C_{L_{FIN}}$		0216	

f	D_{TRE}/D_{FAN}		0282		NOM. = 1.0
g	$FANOP_H$		0283		NOM. = 0.0
h	$FANOP_C$		0284		NOM. = 0.0

NOM. = 1.0

NOTES:
f. INPUT USED TO SIMULATE "FENESTRON" SHROUDED TAIL ROTOR.
g. IF $FANOP_H$ INPUT AS 1.00, TAIL ROTOR/FAN SHUT DOWN IN HOVER.
h. IF $FANOP_C$ INPUT AS 1.00, TAIL ROTOR/FAN SHUT DOWN IN CRUISE.

FORM 53117 (8/74)

HELICOPTER PROPULSION INFORMATION REQUIRED FOR PRIMARY ENGINE SIZING

NOTE: WHEN OPTIND = 2 OR 3 CONSIDER ONLY THOSE ITEMS IN THE SHADED BLOCKS

	PRIMARY ENGINE CYCLE NO.		0217	

	NOTE	VARIABLE	UNIT	LOC	VALUE
PRIMARY ENGINE DATA	a	SHP^*_P	HP	0218	
		N_P		0219	
MAIN XMSN & ACC DATA		XMSNIND		0220	
		SHP_{MRX}/SHP^*_{MR}		0221	
	b	$K_{ALT\ PAYL}$		0222	
		η_T		0223	
		ΔSHP_{ACC}	HP	0224	
T. ROTOR & AUX DRIVE SYS XMSN DATA		SHP_{TRX}/TRP^*		0225	
		SHP_{ARX}/SHP^*_{AUX}		0226	

	NOTE	VARIABLE	UNIT	LOC	VALUE
T/O COND FOR ENG SIZING		$h_{TO(H)}$	FT	0227	
		$(T/W)_D$		0228	
		$\Delta T_{IN\ TO}(H)$	°F	0229	
		$\left(\frac{N_{II}}{N_{II_{MAX}}}\right)_{TO}$		0230	
		N_{PSD}		0231	
		SHP_E/SHP^*		0232	
		$(V_{R/C})_D$	FPM	0233	
CRUISE COND FOR ENG SIZING		POWIND		0234	
		h_C	FT	0235	
		V_C	KTS TAS	0236	
		ΔT_{INCE}	°F	0237	
		$(N_{II}/N_{II_{MAX}})_C$		0238	
	c	$(T_{AUX}/T_{TOT})_C$		0239	
	d	$C_{L_{D_P}}$		0240	
		$(N_{PSD})_C$		0241	

NOTES: a. INPUT NOT NECESSARY WHEN FIXIND = 1
b. INPUT NOT NECESSARY WHEN XMSNIND = 1,2
c. INPUT NOT NECESSARY WHEN AUXIND = 1,2
d. INPUT NOT NECESSARY WHEN AUXIND = 1,3

PREVIOUS PAGE IS BLANK

HELICOPTER PROPULSION INFORMATION REQUIRED FOR SEPARATE AUXILIARY CRUISE ENGINE SIZING (AIPIND = 2)

NOTE: WHEN OPTIND = 2 OR 3 CONSIDER ONLY THOSE ITEMS IN THE SHADED BLOCKS.

AUX PROPULSION ENGINE CYCLE NO.	0242	

	NOTE	VARIABLE	UNIT	LOC	VALUE
AUX PROPULSION ENGINE DATA	a	SHP^*_i	HP	0243	
	a	F_N^*	LBS	0244	
		N_p		0245	
CRUISE CONDITIONS FOR AUX. PROPULSION ENGINE SIZING		POWIND		0246	
		$(N_{II}/N_{II_{MAX}})_i$		0247	

NOTES: a. INPUT NOT NECESSARY WHEN FIXINDI = 1.

PRECEDING PAGE NOT FILMED
BLANK

PROPELLER DATA REQUIRED FOR COMPOUND HELICOPTER AUXILIARY PROPULSION (T/SHAFT ENGINES)

NOTE: WHEN OPTIND = 2 OR 3 CONSIDER ONLY THOSE ITEMS IN THE SHADED BLOCKS.

NOTE	VARIABLE	UNIT	LOC	VALUE
	NO. OF PROPS		0248	
	$V_{T_{AR}}$	FPS	0249	
	DIA	FT	0250	
	X_{AR}		0251	
	$\eta_{T\ AUX}$		0252	

η_p IND		0253	

0 = INPUT η_p'S
1 = INPUT PROP TABLE
2 = PROG CALC PROP PERF.

η_p IND = 0

VALUES OF EFFICIENCY

	NOTE	VARIABLE	UNIT	LOC	VALUE
CLIMB		η_{P3}		0254	
DESCENT		η_{P5}		0255	

NOTE	VARIABLE	UNIT	LOC	VALUE
	AF/BLADE		0257	
	NO. OF BLADES		0258	

η_{P4}: CRUISE & LOITER

NO. OF PAIRS IN η_{P4} TABLE	0281	

VALUES OF M	LOC	VALUE	VALUES OF η_{P4}	LOC	VALUE
	0262			0272	
	0263			0273	
	0264			0274	
	0265			0275	
	0266			0276	
	0267			0277	
	0268			0278	
	0269			0279	
	0270			0280	
	0271			0281	

η_p IND = 1

η_{P_5}	0255		
PROP TABLE NO.	0259		

NOTE: ALSO INPUT PROP TABLE (LOCS. 1700→2142)

	NOTE	VARIABLE	UNIT	LOC	VALUE
$\eta_{P_{IND}=1}$		AF/BLADE		0257	
		NO. OF BLADES		0258	

η_p IND = 2

NO. OF BLADES	0258		
C_{L_i}	0260		
η_{P_5}	0255		

	NOTE	VARIABLE	UNIT	LOC	VALUE
$\eta_{P_{IND}=2}$		AF/BLADE		0257	

HELICOPTER AERODYNAMICS INFORMATION

NOTE: WHEN OPTIND = 2 CONSIDER ONLY THOSE ITEMS IN THE SHADED BLOCKS

NOTE	VARIABLE	LOC.	VALUE
a	$C_{D_{VT}i}$	0301	
a	$C_{D_{HT}i}$	0302	
b	$C_{D_{AP}}$	0303	
	$C_{D_{FP}}$	0304	
	$C_{D_{CSMR}}$	0305	
	$C_{D_{SHMR}}$	0306	
a	$C_{D_{CSTR}}$	0307	
a	$C_{D_{SHTR}}$	0308	
	C_{D_N}	0309	
	$C_{D_{NI}}$	0310	
	$C_{D_{NS}}$	0311	
c	(Gw/F_e)	0312	
c	K_{FED}	0313	
d	e	0314	
a	TFEF	0315	
	$\Delta Fe\ FT^2$	0316	

NOTE	VARIABLE	LOC.	VALUE
a	K_{VT}	0317	
a	K_{HT}	0318	
b	K_{AP}	0319	
	K_{FP}	0320	
	K_{HPIM}	0321	
a	K_{HPIT}	0322	
	K_N	0323	
	K_{NI}	0324	
	K_{NS}	0325	
	K_F	0326	
	K_W	0327	

	$(Re/l)_i$	0328	
	$Cl_\alpha{}^{RAD^{-1}}$	0329	

WING PROFILE DRAG AS FUNCTION OF C_L

NO. OF PAIRS IN TABLE	0330		

NOTE: C_{LW}, C_{DWi} INPUT NOT NECESSARY WHEN AUXIND = 1,3

	$C_{LW(1)}$	0331	
	$C_{LW(2)}$	0332	
	$C_{LW(3)}$	0333	
	$C_{LW(4)}$	0334	
	$C_{LW(5)}$	0335	
	$C_{LW(6)}$	0336	
	$C_{LW(7)}$	0337	
	$C_{LW(8)}$	0338	

	$C_{DWi(1)}$	0339	
	$C_{DWi(2)}$	0340	
	$C_{DWi(3)}$	0341	
	$C_{DWi(4)}$	0342	
	$C_{DWi(5)}$	0343	
	$C_{DWi(6)}$	0344	
	$C_{DWi(7)}$	0345	
	$C_{DWi(8)}$	0346	

NOTES: a. INPUT NOT NECESSARY WHEN CNFIND = 2
b. INPUT NOT NECESSARY WHEN CNFIND = 1
c. INPUT NOT NECESSARY WHEN DRGIND = 1
d. INPUT NOT NECESSARY WHEN OSWIND = 1

PRECEDING PAGE NOT FILMED BLANK

BOEING VERTOL COMPANY
A DIVISION OF BOEING COMPANY

SHEET NO.	CASE NO.
OF	

HELICOPTER WEIGHT INFORMATION

NOTE: WHEN OPTIND = 2 OR 3 CONSIDER ONLY THOSE ITEMS IN THE SHADED BLOCKS

VARIABLE	LOC.	VALUE
† OWE	2601	
W_{FE}	2602	
W_{FUL}	2603	
†† W_{PL}	2604	

INCREMENTAL GROUP WTS. NOM = 0

VARIABLE	LOC.	VALUE
ΔW_{FC}	2605	
ΔW_P	2606	
ΔW_{ST}	2607	

VARIABLE	LOC.	VALUE
RM_I	2608	
Wi	2609	
W_U	2610	
d_i	2611	
d_O	2612	

GROUP WEIGHT INFORMATION

FLIGHT CONTROLS

k_{CC}	2613	
k_{RC}	2614	
k_{SC}	2615	
k_{FW}	2616	
k_{TM}	2617	
k_{SAS}	2618	
k_{RCA}	2619	
k_{SCA}	2620	
k_{MC}	2621	

STRUCTURAL

k_B	2622	
ΔC.G.	2623	
k_{LG}	2624	
k_{MG}	2625	
k_{WW}	2626	
LF	2627	
k_{WS}	2628	
k_{WP}	2629	
k_{HT}	2630	
k_{CLF}	2631	
k_{NAC}	2632	
k_{AIP}	2633	
k_{NACA}	2634	
k_{AIA}	2635	
k_{NS}	2636	

PROPULSION

k_{PRB}	2637	
k_{RBF}	2638	
k_{PH}	2639	
k_{amd}	2640	
k_{BLFD}	2641	
k_{TR}	2642	
k_{AR}	2643	
k_{PA}	2644	
k_{VTAR}	2645	
k_{PDS}	2646	
k_{PDSZ}	2647	
k_{TRDS}	2648	
k_{ADS}	2649	
k_{ADSZ}	2650	
k_{FS}	2651	
k_{PEI}	2652	
k_{AEI}	2653	

† OWE IS NOT NECESSARY WHEN OPTIND = 1,2

†† W_{PL} IS NOT NECESSARY WHEN OPTIND = 2

MULTIPLICATIVE FACTORS NOMINALLY = 1.0

K_1	2654	
K_2	2655	
K_3	2656	
K_4	2657	
K_5	2658	

K_6	2659	
K_7	2660	
K_8	2661	
K_9	2662	
K_{10}	2663	
K_{11}	2664	

K_{12}	2665	
K_{13}	2666	
K_{14}	2667	
K_{15}	2668	
K_{16}	2669	
K_{17}	2670	
K_{18}	2671	
K_{19}	2672	
K_{20}	2673	

PRECEDING PAGE NOT FILMED
BLANK

BOEING VERTOL COMPANY
A DIVISION OF THE BOEING COMPANY

HESCOMP HELICOPTER SIZING AND PERFORMANCE
COMPUTER PROGRAM B-91

SHEET NO.	CASE NO.
OF	

WEIGHT-BALANCE INFORMATION (REQUIRED ONLY WHEN MRPIND > 0)

VARIABLE	LOC.	VALUE
(X_{CGF}/l_B)	2678	
ΔCG_R	2679	
(X_{NG}/l_B)	2680	
(X_{MG}/l_B)	2681	
(X_{PE}/l_B)	2682	
$(X_{PDS}/\Delta X_{PDS})$	2683	
(X_{AV}/l_B)	2684	

VARIABLE	LOC.	VALUE
(X_{FURN}/l_B)	2685	
(X_{APU}/l_B)	2686	
(X_{AE}/l_B)	2687	
$(X_{ADS}/\Delta X_{ADS})$	2688	
(X_{AR}/l_{TB})	2689	
(X_{SC}/l_B)	2690	
(X_{ASC}/l_B)	2691	

VARIABLE	LOC.	VALUE
W_{AV}	2692	
W_{FURN}	2693	
W_{APU}	2694	
K_{FULS}	2695	
K_{TBBS}	2696	

FORM 53115 (11/73)

PRECEDING PAGE NOT FILMED

ROTOR LIMITS INFORMATION

	LOC	VALUE
NUMBER OF C_X/σ	0347	
NUMBER OF μ	0348	

VALUES OF C_X/σ		
$(C_X/\sigma)_1$	0349	
$(C_X/\sigma)_2$	0350	
$(C_X/\sigma)_3$	0351	
$(C_X/\sigma)_4$	0352	
$(C_X/\sigma)_5$	0353	

VALUES OF μ		
μ_1	0354	
μ_2	0355	
μ_3	0356	
μ_4	0357	
μ_5	0358	
μ_6	0359	
μ_7	0360	

VALUES OF C_T'/σ

	$(C_X/\sigma)_1$ =		$(C_X/\sigma)_2$ =		$(C_X/\sigma)_3$ =		$(C_X/\sigma)_4$ =		$(C_X/\sigma)_5$ =	
	LOC	VALUE	LOC	VALUE	LOC	VALUE	LOC	VALUE	LOC	VALUE
μ_1 =	0361		0368		0375		0382		0389	
μ_2 =	0362		0369		0376		0383		0390	
μ_3 =	0363		0370		0377		0384		0391	
μ_4 =	0364		0371		0378		0385		0392	
μ_5 =	0365		0372		0379		0386		0393	
μ_6 =	0366		0373		0380		0387		0394	
μ_7 =	0367		0374		0381		0388		0395	

PRECEDING PAGE NOT FILMED
BLANK

ATMOSPHERE TEMPERATURE

NO. OF PAIRS	1650	

NOTE: THIS TABLE IS NOT NECESSARY IF ATMIND IS NEVER SET TO 2

h_1	1651	
h_2	1652	
h_3	1653	
h_4	1654	
h_5	1655	
h_6	1656	
h_7	1657	
h_8	1658	
h_9	1659	
h_{10}	1660	

θ_1	1661	
θ_2	1662	
θ_3	1663	
θ_4	1664	
θ_5	1665	
θ_6	1666	
θ_7	1667	
θ_8	1668	
θ_9	1669	
θ_{10}	1670	

PRECEDING PAGE NOT FILMED

TAXI INFORMATION

SGTIND = 1

ATMIND

	LOC	VALUE
1st	0401	
2nd	0402	
3rd	0403	
4th	0404	
5th	0405	
6th	0406	
7th	0407	
8th	0408	
9th	0409	
10th	0410	

ΔT_{IN} (°F) (NOTE a)

LOC	VALUE
0421	
0422	
0423	
0424	
0425	
0426	
0427	
0428	
0429	
0430	

$(N_{II}/N_{II\ MAX})$ (PRIM ENG)

LOC	VALUE
0441	
0442	
0443	
0444	
0445	
0446	
0447	
0448	
0449	
0450	

0 = STD ATMOSPHERE
1 = STD + ΔT_{IN}
2 = ARBITRARY θ (h)

t_T (HR)

	LOC	VALUE
1st	0411	
2nd	0412	
3rd	0413	
4th	0414	
5th	0415	
6th	0416	
7th	0417	
8th	0418	
9th	0419	
10th	0420	

K_{FI}

LOC	VALUE
0431	
0432	
0433	
0434	
0435	
0436	
0437	
0438	
0439	
0440	

NOTE: a. INPUT NOT NECESSARY WHEN ATMIND = 0, 2

PRECEDING PAGE NOT FILMED
BLANK

TAKEOFF, HOVER, AND LANDING INFORMATION (SGTIND = 2)

TOLIND

	LOC	VALUE
1st	0451	
2nd	0452	
3rd	0453	
4th	0454	
5th	0455	
6th	0456	
7th	0457	
8th	0458	
9th	0459	
10th	0460	

1 = INPUT T/W, $V_{R/C}$
2 = INPUT PEHF, $V_{R/C}$
3 = INPUT T/W, $V_{R/C}$, h_{BF}/D
4 = INPUT PEHF, $V_{R/C}$, h_{BF}/D

ATMIND

	LOC	VALUE
1st	0481	
2nd	0482	
3rd	0483	
4th	0484	
5th	0485	
6th	0486	
7th	0487	
8th	0488	
9th	0489	
10th	0490	

0 = STANDARD ATMOSPHERE
1 = STD + ΔT_{IN}
2 = ARBITRARY θ (h)

ΔT_{IN} (°F) (NOTE a)

	LOC	VALUE
1st	0501	
2nd	0502	
3rd	0503	
4th	0504	
5th	0505	
6th	0506	
7th	0507	
8th	0508	
9th	0509	
10th	0510	

T/W (NOTE b)

	LOC	VALUE
1st	0521	
2nd	0522	
3rd	0523	
4th	0524	
5th	0525	
6th	0526	
7th	0527	
8th	0528	
9th	0529	
10th	0530	

$(N_{II}/N_{II_{MAX}})$ (PRIMARY ENG)

	LOC	VALUE
1st	0541	
2nd	0542	
3rd	0543	
4th	0544	
5th	0545	
6th	0546	
7th	0547	
8th	0548	
9th	0549	
10th	0550	

h_{BF}/D (NOTE c)

	LOC	VALUE
1st	0471	
2nd	0472	
3rd	0473	
4th	0474	
5th	0475	
6th	0476	
7th	0477	
8th	0478	
9th	0479	
10th	0480	

PEHF (NOTE d)

	LOC	VALUE
1st	0491	
2nd	0492	
3rd	0493	
4th	0494	
5th	0495	
6th	0496	
7th	0497	
8th	0498	
9th	0499	
10th	0500	

$V_{R/C}$ (FPM)

	LOC	VALUE
1st	0511	
2nd	0512	
3rd	0513	
4th	0514	
5th	0515	
6th	0516	
7th	0517	
8th	0518	
9th	0519	
10th	0520	

Δt_H (HR)

	LOC	VALUE
1st	0531	
2nd	0532	
3rd	0533	
4th	0534	
5th	0535	
6th	0536	
7th	0537	
8th	0538	
9th	0539	
10th	0540	

t_H (HR)

	LOC	VALUE
1st	0551	
2nd	0552	
3rd	0553	
4th	0554	
5th	0555	
6th	0556	
7th	0557	
8th	0558	
9th	0559	
10th	0560	

NOTES: a. INPUT NOT NECESSARY WHEN ATMIND = 0, 2
b. INPUT NOT NECESSARY WHEN TOLIND = 2, 4
c. INPUT NOT NECESSARY WHEN TOLIND = 1, 2
d. INPUT NOT NECESSARY WHEN TOLIND = 1, 3

PREVIOUS PAGE NOT FILMED
BLANK

CLIMB INFORMATION (SGTIND = 3)

	CLMIND		ATMIND		ΔT in (^{o}F) (NOTE a)		POWIND		$N_{II}/N_{II\ MAX}$ (PRIMARY ENG)		$N_{II}/N_{II\ MAX}$ (AUX ENG)		T_{AUX}/T_{TOT} (NOTE b)	
	LOC	VALUE	LOC	VALUE	LOC	VALUE	LOC	VALUE	LOC	VALUE	LOC	VALUE	LOC	VALUE
1st	0571		0591		0611		0631		0651		0671		0691	
2nd	0572		0592		0612		0632		0652		0672		0692	
3rd	0573		0593		0613		0633		0653		0673		0693	
4th	0574		0594		0614		0634		0654		0674		0694	
5th	0575		0595		0615		0635		0655		0675		0695	
6th	0576		0596		0616		0636		0656		0676		0696	
7th	0577		0597		0617		0637		0657		0677		0697	
8th	0578		0598		0618		0638		0658		0678		0698	
9th	0579		0599		0619		0639		0659		0679		0699	
10th	0580		0600		0620		0640		0660		0680		0700	

1 = MAX R/C
2 = CONSTANT EAS
3 = CONSTANT MACH
4 = CONSTANT TAS

0 = STANDARD ATMOSPHERE
1 = STD + ΔT_{IN}
2 = ARBITRARY θ (h)

0 = MAX POWER
1 = MIL POWER
2 = NORMAL POWER

	MACH OR EAS OR TAS (NOTE c)		$C_{L_{WING}}$ (NOTE d)		Δh (FT)		h_{MAX} (FT)		ΔFe_{CL} (FT^2)		$N_{PSD_{CL}}$		$N_{PSD\ i_{CL}}$	
	LOC	VALUE	LOC	VALUE	LOC	VALUE	LOC	VALUE		VALUE	LOC	VALUE	LOC	VALUE
1st	0581		0601		0621		0641		0661		0681		0701	
2nd	0582		0602		0622		0642		0662		0682		0702	
3rd	0583		0603		0623		0643		0663		0683		0703	
4th	0584		0604		0624		0644		0664		0684		0704	
5th	0585		0605		0625		0645		0665		0685		0705	
6th	0586		0606		0626		0646		0666		0686		0706	
7th	0587		0607		0627		0647		0667		0687		0707	
8th	0588		0608		0628		0648		0668		0688		0708	
9th	0589		0609		0629		0649		0669		0689		0709	
10th	0590		0610		0630		0650		0670		0690		0710	

NOTES: a. INPUT NOT NECESSARY WHEN ATMIND = 0, 2
b. INPUT NOT NECESSARY WHEN AUXIND = 1, 2
c. INPUT NOT NECESSARY WHEN CLMIND = 1
d. INPUT NOT NECESSARY WHEN AUXIND = 1, 3

HESCOMP HELICOPTER SIZING AND PERFORMANCE COMPUTER PROGRAM B-91

SHEET NO.	CASE NO.
OF	

CRUISE INFORMATION (SGTIND = 4)

	CRSIND		ATMIND		ΔT_{IN}(°F) (NOTE a)		POWIND (NOTE b)		$N_{II}/N_{II\ MAX}$ (PRIMARY ENG)		$N_{II}/N_{II\ MAX}$ (AUX ENG)		T_{AUX}/T_{TOT} (NOTE c)	
	LOC	VALUE	LOC	VALUE	LOC	VALUE	LOC	VALUE	LOC	VALUE	LOC	VALUE	LOC	VALUE
1st	0721		0741		0761		0781		0801		0821		0841	
2nd	0722		0742		0762		0782		0802		0822		0842	
3rd	0723		0743		0763		0783		0803		0823		0843	
4th	0724		0744		0764		0784		0804		0824		0844	
5th	0725		0745		0765		0785		0805		0825		0845	
6th	0726		0746		0766		0786		0806		0826		0846	
7th	0727		0747		0767		0787		0807		0827		0847	
8th	0728		0748		0768		0788		0808		0828		0848	
9th	0729		0749		0769		0789		0809		0829		0849	
10th	0730		0750		0770		0790		0810		0830		0850	

1 = SPECIFIED POWER
2 = CONSTANT TAS
3 = BEST NMPP
4 = 99% BEST NMPP
5 = BEST NMPP, CONST. W/δ
6 = 99% BEST NMPP, CONST W/δ

0 = STANDARD ATMOSPHERE
1 = STD + ΔT_{IN}
2 = ARBITRARY θ (h)

0 = MAX POWER
1 = MIL POWER
2 = NORMAL POWER

	V_{IN} OR HEADWIND (NOTE d)		$C_{L_{WING}}$ (NOTE e)		ΔR(NM)		R_{MAX}(NM)		$\Delta Fe_{CR}(FT^2)$		$N_{PSD_{CR}}$		$N_{PSD\ i_{CR}}$	
	LOC	VALUE	LOC	VALUE	LOC	VALUE	LOC	VALUE	LOC	VALUE	LOC	VALUE	LOC	VALUE
1st	0731		0751		0771		0791		0811		0831		0851	
2nd	0732		0752		0772		0792		0812		0832		0852	
3rd	0733		0753		0773		0793		0813		0833		0853	
4th	0734		0754		0774		0794		0814		0834		0854	
5th	0735		0755		0775		0795		0815		0835		0855	
6th	0736		0756		0776		0796		0816		0836		0856	
7th	0737		0757		0777		0797		0817		0837		0857	
8th	0738		0758		0778		0798		0818		0838		0858	
9th	0739		0759		0779		0799		0819		0839		0859	
10th	0740		0760		0780		0800		0820		0840		0860	

NOTES: a. INPUT NOT NECESSARY WHEN ATMIND = 0, 2
b. INPUT NOT NECESSARY WHEN CRSIND = 3
c. INPUT NOT NECESSARY WHEN AUXIND = 1, 2
d. INPUT V_{IN} WHEN CRSIND = 2
INPUT HEADWIND WHEN CRSIND = 3 THRU 6
e. INPUT NOT NECESSARY WHEN AUXIND = 1, 3

PRECEDING PAGE NOT FILMED

DESCENT INFORMATION (SGTIND = 5)

	DESIND		RMAXIND		ATMIND		ΔT_{IN} (°F) (NOTE a)		R /D (FPM)		$N_{II}/N_{II\ MAX}$ (PRIMARY ENG)		$N_{II}/N_{II\ MAX}$ (AUX ENG)		T_{AUX}/T_{TOT} (NOTE b)	
	LOC	VALUE	LOC	VALUE	LOC	VALUE	LOC	VALUE	LOC	VALUE	LOC	VALUE	LOC	VALUE	LOC	VALUE
1ST	0871		0891		0911		0931		0951		0971		0991		1011	
2ND	0872		0892		0912		0932		0952		0972		0992		1012	
3RD	0873		0893		0913		0933		0953		0973		0993		1013	
4TH	0874		0894		0914		0934		0954		0974		0994		1014	
5TH	0875		0895		0915		0935		0955		0975		0995		1015	
6TH	0876		0896		0916		0936		0956		0976		0996		1016	
7TH	0877		0897		0917		0937		0957		0977		0997		1017	
8TH	0878		0898		0918		0938		0958		0978		0998		1018	
9TH	0879		0899		0919		0939		0959		0979		0999		1019	
10TH	0880		0900		0920		0940		0960		0980		1000		1020	

1 = CONSTANT TAS
2 = CONSTANT EAS
3 = CONSTANT MACH NO.

0 = TERMINAL RANGE SPECIFIND
1 = TERM. RANGE CHK'D, BUT NOT MATCHED
2 = DESCENT TO SPECIFIED MIN ALT.
3 = SPIRAL DESCENT PATH

0 = STD ATMOSPHERE
1 = STD + ΔT_{IN}
2 = ARBITRARY $\theta(h)$

	MACH OR EAS OR TAS		C_{L_W} (NOTE c)		Δh (FT)		h_{MIN} (FT)		R_{MAX} (NM)		ΔFe_{DSC} (FT^2)		$N_{PSD_{DSC}}$		$N_{PSD_{i_{DSC}}}$	
	LOC	VALUE	LOC	VALUE	LOC	VALUE	LOC	VALUE	LOC	VALUE	LOC	VALUE	LOC	VALUE	LOC	VALUE
1ST	0891		0901		0921		0941		0961		0981		1001		1021	
2ND	0892		0902		0922		0942		0962		0982		1002		1022	
3RD	0893		0903		0923		0943		0963		0983		1003		1023	
4TH	0894		0904		0924		0944		0964		0984		1004		1024	
5TH	0895		0905		0925		0945		0965		0985		1005		1025	
6TH	0896		0906		0926		0946		0966		0986		1006		1026	
7TH	0897		0907		0927		0947		0967		0987		1007		1027	
8TH	0898		0908		0928		0948		0968		0988		1008		1028	
9TH	0899		0909		0929		0949		0969		0989		1009		1029	
10TH	0900		0910		0930		0950		0970		0990		1010		1030	

NOTES: a. INPUT NOT NECESSARY WHEN ATMIND = 0, 2
b. INPUT NOT NECESSARY WHEN AUXIND = 1, 2
c. INPUT NOT NECESSARY WHEN AUXIND = 1, 3

REPRODUCIBILITY OF THE ORIGINAL PAGE IS POOR

LOITER INFORMATION (SGTIND = 6)

ATMIND

	LOC	VALUE
1st	1031	
2nd	1032	
3rd	1033	
4th	1034	
5th	1035	
6th	1036	
7th	1037	
8th	1038	
9th	1039	
10th	1040	

0 = STANDARD ATMOSPHERE
1 = STD + ΔT_{IN}
2 = ARBITRARY θ (h)

ΔT_{IN} (^{o}F) (NOTE a)

LOC	VALUE
1051	
1052	
1053	
1054	
1055	
1056	
1057	
1058	
1059	
1060	

$(N_{II}/N_{II\ MAX})$ (PRIMARY ENG)

LOC	VALUE
1071	
1072	
1073	
1074	
1075	
1076	
1077	
1078	
1079	
1080	

$(N_{II}/N_{II\ MAX})$ (AUX ENG)

LOC	VALUE
1091	
1092	
1093	
1094	
1095	
1096	
1097	
1098	
1099	
1100	

T_{AUX}/T_{TOT} (NOTE b)

LOC	VALUE
1111	
1112	
1113	
1114	
1115	
1116	
1117	
1118	
1119	
1120	

C_{L_W} (NOTE c)

	LOC	VALUE
1st	1041	
2nd	1042	
3rd	1043	
4th	1044	
5th	1045	
6th	1046	
7th	1047	
8th	1048	
9th	1049	
10th	1050	

Δt_L (HR)

LOC	VALUE
1061	
1062	
1063	
1064	
1065	
1066	
1067	
1068	
1069	
1070	

t_L (HR)

LOC	VALUE
1081	
1082	
1083	
1084	
1085	
1086	
1087	
1088	
1089	
1090	

$N_{PSD\ LOITER}$

LOC	VALUE
1101	
1102	
1103	
1104	
1105	
1106	
1107	
1108	
1109	
1110	

$N_{PSD\ i\ LOITER}$

LOC	VALUE
1121	
1122	
1123	
1124	
1125	
1126	
1127	
1128	
1129	
1130	

ΔFe_L (FT^2)

LOC	VALUE
1131	
1132	
1133	
1134	
1135	
1136	
1137	
1138	
1139	
1140	

NOTES: a. INPUT NOT NECESSARY WHEN ATMIND = 0, 2
b. INPUT NOT NECESSARY WHEN AUXIND = 1, 2
c. INPUT NOT NECESSARY WHEN AUXIND = 1, 3

CHANGE IN FUEL WEIGHT (SGTIND = 7)

ΔW_F(LBS)

	LOC	VALUE
1st	1141	
2nd	1142	
3rd	1143	
4th	1144	
5th	1145	
6th	1146	
7th	1147	
8th	1148	
9th	1149	
10th	1150	

t_{FW}(HR)

LOC	VALUE
1151	
1152	
1153	
1154	
1155	
1156	
1157	
1158	
1159	
1160	

CHANGE IN PAYLOAD WEIGHT (SGTIND = 8)

ΔW_{PL}(LBS)

LOC	VALUE
1161	
1162	
1163	
1164	
1165	
1166	
1167	
1168	
1169	
1170	

t_{PW}(HR)

LOC	VALUE
1171	
1172	
1173	
1174	
1175	
1176	
1177	
1178	
1179	
1180	

TRANSFER ALTITUDE (SGTIND = 9)

h_{FINAL}(FT) (h_{OPT}IND = 0)
OR h_{MAX}(FT) (h_{OPT}IND = 1)

	LOC	VALUE
1st	1181	
2nd	1182	
3rd	1183	
4th	1184	
5th	1185	
6th	1186	
7th	1187	
8th	1188	
9th	1189	
10th	1190	

CHANGE FUEL OR CHANGE PAYLOAD

OR SGTIND = 7
SGTIND = 8

WGTIND

LOC	VALUE
1191	

$0 = W + \Delta W \leq W_G$

1 = NO WEIGHT RESTRICTION

REPRODUCIBILITY OF THE ORIGINAL PAGE IS POOR

ENGINE CYCLE DATA; NON-STANDARD PERFORMANCE

SHEET NO.	CASE NO.
OF	

PRIMARY ENGINE DATA

VARIABLE	LOC	VALUE
WDTIND	1201	
N1IND	1202	
N1ΘIND	1203	
N2IND	1204	
QIND	1205	

VARIABLE	LOC	VALUE
$\dot{W}_{MAX}/\dot{W}^*$	1220	
$N_{I\,MAX}/N_I{}^*$	1221	
$(N_t/\sqrt{\Theta}_t/N_I^*)_{MAX}$	1222	
$N_{II_{MAX}}/N_{II}^*$	1223	
Q_{MAX}/Q^*	1224	

INPUT IF WDTIND = 1

INPUT IF N1IND = 1

INPUT IF N1ΘIND = 1

INPUT IF N2IND = 1,2

INPUT IF QIND = 1

WDTIND: {0 = NO FUEL FLOW CUTOFF; 1 = FUEL FLOW CUTOFF}

N1IND: {0 = NO N1 CUTOFF; 1 = N1 CUTOFF}

N2IND: {0 = NO N2 CUTOFF; OPTIMUM N2 VARIATION; 1 = N2 CUTOFF; OPTIMUM N2 VARIATION; 2 = N2 CUTOFF; NON-OPTIMUM N2 VARIATION}

QIND: {0 = NO TORQUE CUTOFF; 1 = TORQUE CUTOFF}

N1ΘIND: {0 = NO REFERRED N1 CUTOFF; 1 = REFERRED N1 CUTOFF}

VARIABLE	LOC	VALUE
RNOIND	1206	

0= NO REYNOLDS NO. CORRECTIONS
1= REYNOLDS NO. CORRECTIONS

REYNOLDS NO. CORRECTION FACTOR

VALUES OF $\frac{N_I}{N_I{}^*}\ \frac{D}{\nu_1}$

LOC	VALUE
1207	
1208	
1209	
1210	
1211	
1212	
1213	
1214	
1215	
1216	

VALUES OF K_{PR}

LOC	VALUE
1225	
1226	
1227	
1228	
1229	
1230	
1231	
1232	
1233	
1234	

INPUT THIS TABLE IF RNOIND = 1

OUTPUT SHAFT SPEED CORRECTION

VALUES OF $\frac{N_{II}}{N_{II_{OPT}}}$

LOC	VALUE
1238	
1239	
1240	
1241	
1242	
1243	
1244	
1245	
1246	
1247	

VALUES OF K_{PN}

LOC	VALUE
1248	
1249	
1250	
1251	
1252	
1253	
1254	
1255	
1256	
1257	

INPUT THIS TABLE IF N2IND = 2 AND NON-STANDARD CORRECTION IS DESIRED

PRECEDING PAGE NOT FILMED
BLANK

ENGINE CYCLE DATA; NON-STANDARD PERFORMANCE

AUXILIARY INDEPENDENT ENGINE DATA

VARIABLE	LOC	VALUE
WDTINDI	2201	
N1INDI	2202	
N1θINDI	2203	
N2INDI	2204	
QINDI	2205	

VARIABLE	LOC	VALUE
$\overset{*}{W}_{MAX}/\overset{*}{W}$	2220	
$N_{1MAX}/N_1{}^*$	2221	
$(N_1/\sqrt{\theta_1}/N_1{}^*)$ MAX	2222	
$N_{II\ MAX}/N_{II}{}^*$	2223	
Q_{MAX}/Q^*	2224	

INPUT IF WDTINDI = 1

INPUT IF N1INDI = 1

INPUT IF N1θINDI = 1

INPUT IF N2INDI = 1, 2

INPUT IF QINDI = 1

WDTINDI: {0 = NO FUEL FLOW CUTOFF; 1 = FUEL FLOW CUTOFF}

N1INDI: {0 = NO N1 CUTOFF; 1 = N1 CUTOFF}

N2INDI: {0 = NO N2 CUTOFF; OPTIMUM N2 VARIATION; 1 = N2 CUTOFF; OPTIMUM N2 VARIATION; 2 = N2 CUTOFF; NON-OPTIMUM N2 VARIATION}

QINDI: {0 = NO TORQUE CUTOFF; 1 = TORQUE CUTOFF}

N1θINDI: {0 = NO REFERRED N1 CUTOFF; 1 = REFERRED N1 CUTOFF}

VARIABLE	LOC	VALUE
RNOINDI	2206	

0 = NO REYNOLDS NO. CORRECTIONS
1 = REYNOLDS NO. CORRECTIONS

REYNOLDS NO. CORRECTION FACTOR

VALUES OF $\frac{N_I}{N_{I^*}}$ $\frac{D}{\nu_1}$

LOC*	VALUE
2207	
2208	
2209	
2210	
2211	
2212	
2213	
2214	
2215	
2216	

VALUES OF K_{PR}

LOC	VALUE
2226	
2226	
2227	
2228	
2229	
2230	
2231	
2232	
2233	
2234	

INPUT THIS TABLE IF RNOINDI = 1

OUTPUT SHAFT SPEED CORRECTION

VALUES OF $\frac{N_{II}}{N_{II\ OPT}}$

LOC	VALUE
2238	
2239	
2240	
2241	
2242	
2243	
2244	
2245	
2246	
2247	

VALUES OF K_{PN}

LOC	VALUE
2248	
2249	
2250	
2251	
2252	
2253	
2254	
2255	
2256	
2257	

INPUT THIS TABLE IF N2INDI = 2 AND NON-STANDARD CORRECTION IS DESIRED

PRECEDING PAGE NOT FILMED BLANK

SHORT FORM AERO (MAIN) ROTOR CYCLE INFORMATION

VARIABLE	LOC	VALUE
ROTOR CYCLE NO.	1601	
$\theta_{TWIST\ REF}$	1602	

HOVER (STATIC THRUST DATA)

VARIABLE	LOC	VALUE
$C_{D_{B_0}}$	1603	
K_{H_1}	1604	
K_{H_2}	1605	
K_{H_3}	1606	
K_{H_4}	1607	
K_{H_5}	1608	

CRUISE DATA

VARIABLE	LOC	VALUE
C_{D_0}	1609	
K_{C_1}	1610	
K_{C_2}	1611	
K_{C_3}	1612	
K_{C_4}	1613	
K_{C_5}	1614	
K_{D_0}	1615	

HOVER (STATIC THRUST DATA)

NO. OF CT	LOC 1616	VALUE

	VALUES OF C_T		VALUES OF K_{HOV_A}	
	LOC	VALUE	LOC	VALUE
1	1617		1627	
2	1618		1628	
3	1619		1629	
4	1620		1630	
5	1621		1631	
6	1622		1632	
7	1623		1633	
8	1624		1634	
9	1625		1635	
10	1626		1636	

THIS INFORMATION IS FOR REFERENCE PURPOSES ONLY

REFERENCE BLADE NO.	
BLADE PLANFORM TAPER RATIO $\lambda = C_{TIP}/C_{C.\ LINE\ ROT.}$	

BLADE AIRFOIL DISTRIBUTION

RADIAL STA (r/R)	AIRFOIL DESIGNATION

REMARKS

REPRODUCIBILITY OF THE ORIGINAL PAGE IS POOR

ROTOR PERFORMANCE MAP

	LOC	VALUE
ROTOR MAP NO.	2700	

	LOC	VALUE
D_{REF}	2701	
σ_{REF}	2702	
βT_{REF}	2703	

HOVER PERFORMANCE

	LOC	VALUE
NO. OF C_T/σ'S	2704	

	LOC	VALUE
NO. OF M_{TIP}'S	2715	

VALUES OF C_T/σ

	LOC	VALUE
$(C_T/\sigma)_1$	2705	
$(C_T/\sigma)_2$	2706	
$(C_T/\sigma)_3$	2707	
$(C_T/\sigma)_4$	2708	
$(C_T/\sigma)_5$	2709	
$(C_T/\sigma)_6$	2710	
$(C_T/\sigma)_7$	2711	
$(C_T/\sigma)_8$	2712	
$(C_T/\sigma)_9$	2713	
$(C_T/\sigma)_{10}$	2714	

VALUES OF M_{TIP}

	LOC	VALUE
M_{T_1}	2716	
M_{T_2}	2717	
M_{T_3}	2718	
M_{T_4}	2719	
M_{T_5}	2720	
M_{T_6}	2721	

$$C_T/\sigma = 4T/\rho \pi D^2 V_T{}^2 N_R \sigma$$

$$C_{P_H}/\sigma = 2200\ RHP/\rho \pi D^2 V_T{}^3 N_R \sigma$$

INPUT VALUES OF C_{P_H}/σ FOR COMBINATIONS OF C_T/σ AND M_{TIP}

	M_{TIP_1} =		M_{TIP_2} =		M_{TIP_3} =		M_{TIP_4} =		M_{TIP_5} =		M_{TIP_6} =	
	LOC	VALUE	LOC	VALUE	LOC	VALUE	LOC	VALUE	LOC	VALUE	LOC	VALUE
$(C_T/\sigma)_1$ =	2722		2732		2742		2752		2762		2772	
$(C_T/\sigma)_2$ =	2723		2733		2743		2753		2763		2773	
$(C_T/\sigma)_3$ =	2724		2734		2744		2754		2764		2774	
$(C_T/\sigma)_4$ =	2725		2735		2745		2755		2765		2775	
$(C_T/\sigma)_5$ =	2726		2736		2746		2756		2766		2776	
$(C_T/\sigma)_6$ =	2727		2737		2747		2757		2767		2777	
$(C_T/\sigma)_7$ =	2728		2738		2748		2758		2768		2778	
$(C_T/\sigma)_8$ =	2729		2739		2749		2759		2769		2779	
$(C_T/\sigma)_9$ =	2730		2740		2750		2760		2770		2780	
$C_T/\sigma)_{10}$ =	2731		2741		2751		2761		2771		2781	

NOTE: C_T & C_p ARE IN "ROTOR" NOTATION

PRECEDING PAGE NOT FILMED
BLANK

ROTOR PERFORMANCE "MAP"

CRUISE PERFORMANCE

	LOC	VALUE
NO. OF ADVANCE RATIOS (μ)	2782	

	LOC	VALUE
NO. OF ROTOR LIFT COEFFICIENTS (C_T'/σ)	2789	

	LOC	VALUE
NO. OF ROTOR PROPULSIVE THRUST COEFF (C_X/σ)	2800	

VALUES OF μ

	LOC	VALUE
μ_1	2783	
μ_2	2784	
μ_3	2785	
μ_4	2786	
μ_5	2787	
μ_6	2788	

VALUES OF (C_T'/σ)

	LOC	VALUE
$(C_T'/\sigma)_1$	2790	
$(C_T'/\sigma)_2$	2791	
$(C_T'/\sigma)_3$	2792	
$(C_T'/\sigma)_4$	2793	
$(C_T'/\sigma)_5$	2794	
$(C_T'/\sigma)_6$	2795	
$(C_T'/\sigma)_7$	2796	
$(C_T'/\sigma)_8$	2797	
$(C_T'/\sigma)_9$	2798	
$(C_T'/\sigma)_{10}$	2799	

VALUES OF C_X/σ

	LOC	VALUE
$(C_X/\sigma)_1$	2801	
$(C_X/\sigma)_2$	2802	
$(C_X/\sigma)_3$	2803	
$(C_X/\sigma)_4$	2804	
$(C_X/\sigma)_5$	2805	
$(C_X/\sigma)_6$	2806	
$(C_X/\sigma)_7$	2807	
$(C_X/\sigma)_8$	2808	
$(C_X/\sigma)_9$	2809	
$(C_X/\sigma)_{10}$	2810	

$$\mu = \frac{1.688\, V_{KT}}{V_{TIP}}$$

$$C_T'/\sigma = \frac{\text{LIFT}}{\frac{\rho \pi D^2}{4} V_T^2 \sigma_{MR} N_R}$$

$$C_X/\sigma = \frac{\text{PROPULSIVE FORCE}}{\frac{\rho \pi D^2}{4} V_T^2 \sigma_{MR} N_R}$$

$$C_P/\sigma = \frac{2200 \times \text{ROTOR POWER (SHP)}}{\rho \pi D^2 V_T^3 \sigma_{MR} N_R}$$

PRECEDING PAGE NOT FILMED
BLANK

ROTOR PERFORMANCE "MAP"

CRUISE PERFORMANCE **INPUT VALUES OF ROTOR POWER COEFFICIENT $\left(\frac{C_P}{\sigma}\right)$ FOR COMBINATIONS OF $\mu, \frac{C_T'}{\sigma}$, & $\frac{C_X}{\sigma}$**

ROTOR PROPULSIVE FORCE COEFFICIENT

ADVANCE RATIO μ_1 =	$(C_X/\sigma)_1$ =		$(C_X/\sigma)_2$ =		$(C_X/\sigma)_3$ =		$(C_X/\sigma)_4$ =		$(C_X/\sigma)_5$ =		$(C_X/\sigma)_6$ =		$(C_X/\sigma)_7$ =		$(C_X/\sigma)_8$ =		$(C_X/\sigma)_9$ =		$(C_X/\sigma)_{10}$ =	
	LOC	VALUE	LOC	VALUE	LOC	VALUE	LOC	VALUE	LOC	VALUE	LOC	VALUE	LOC	VALUE	LOC	VALUE	LOC	VALUE	LOC	VALUE
$(C_T'/\sigma)_1$ =	2811		2821		2831		2841		2851		2861		2871		2881		2891		2901	
$(C_T'/\sigma)_2$ =	2812		2822		2832		2842		2852		2862		2872		2882		2892		2902	
$(C_T'/\sigma)_3$ =	2813		2823		2833		2843		2853		2863		2873		2883		2893		2903	
$(C_T'/\sigma)_4$ =	2814		2824		2834		2844		2854		2864		2874		2884		2894		2904	
$(C_T'/\sigma)_5$ =	2815		2825		2835		2845		2855		2865		2875		2885		2895		2905	
$(C_T'/\sigma)_6$ =	2816		2826		2836		2846		2856		2866		2876		2886		2896		2906	
$(C_T'/\sigma)_7$ =	2817		2827		2837		2847		2857		2867		2877		2887		2897		2907	
$(C_T'/\sigma)_8$ =	2818		2828		2838		2848		2858		2868		2878		2888		2898		2908	
$(C_T'/\sigma)_9$ =	2819		2829		2839		2849		2859		2869		2879		2889		2899		2909	
$(C_T'/\sigma)_{10}$ =	2820		2830		2840		2850		2860		2870		2880		2890		2900		2910	
ADVANCE RATIO μ_2 =	$(C_X/\sigma)_1$ =		$(C_X/\sigma)_2$ =		$(C_X/\sigma)_3$ =		$(C_X/\sigma)_4$ =		$(C_X/\sigma)_5$ =		$(C_X/\sigma)_6$ =		$(C_X/\sigma)_7$ =		$(C_X/\sigma)_8$ =		$(C_X/\sigma)_9$ =		$(C_X/\sigma)_{10}$ =	
	LOC	VALUE	LOC	VALUE	LOC	VALUE	LOC	VALUE	LOC	VALUE	LOC	VALUE	LOC	VALUE	LOC	VALUE	LOC	VALUE	LOC	VALUE
$(C_T'/\sigma)_1$ =	2911		2921		2931		2941		2951		2961		2971		2981		2991		3001	
$(C_T'/\sigma)_2$ =	2912		2922		2932		2942		2952		2962		2972		2982		2992		3002	
$(C_T'/\sigma)_3$ =	2913		2923		2933		2943		2953		2963		2973		2983		2993		3003	
$(C_T'/\sigma)_4$ =	2914		2924		2934		2944		2954		2964		2974		2984		2994		3004	
$(C_T'/\sigma)_5$ =	2915		2925		2935		2945		2955		2965		2975		2985		2995		3005	
$(C_T'/\sigma)_6$ =	2916		2926		2936		2946		2956		2966		2976		2986		2996		3006	
$(C_T'/\sigma)_7$ =	2917		2927		2937		2947		2957		2967		2977		2987		2997		3007	
$(C_T'/\sigma)_8$ =	2918		2928		2938		2948		2958		2968		2978		2988		2998		3008	
$(C_T'/\sigma)_9$ =	2919		2929		2939		2949		2959		2969		2979		2989		2999		3009	
$(C_T'/\sigma)_{10}$ =	2920		2930		2940		2950		2960		2970		2980		2990		3000		3010	

REPRODUCIBLE PAGE NOT FILMED

ROTOR PERFORMANCE "MAP"

CRUISE PERFORMANCE INPUT VALUES OF ROTOR POWER COEFFICIENT $(\frac{C_P}{\sigma})$ FOR COMBINATIONS OF μ, $\frac{C_T'}{\sigma}$ & $\frac{C_X}{\sigma}$

ROTOR PROPULSIVE FORCE COEFFICIENT

ADVANCE RATIO μ_3 =	$(C_X/\sigma)_1$ =		$(C_X/\sigma)_2$ =		$(C_X/\sigma)_3$ =		$(C_X/\sigma)_4$ =		$(C_X/\sigma)_5$ =		$(C_X/\sigma)_6$ =		$(C_X/\sigma)_7$ =		$(C_X/\sigma)_8$ =		$(C_X/\sigma)_9$ =		$(C_X/\sigma)_{10}$ =	
	LOC	VALUE	LOC	VALUE	LOC	VALUE	LOC	VALUE	LOC	VALUE	LOC	VALUE	LOC	VALUE	LOC	VALUE	LOC	VALUE	LOC	VALUE
$(C_T'/\sigma)_1$ =	3011		3021		3031		3041		3051		3061		3071		3081		3091		3101	
$(C_T'/\sigma)_2$ =	3012		3022		3032		3042		3052		3062		3072		3082		3092		3102	
$(C_T'/\sigma)_3$ =	3013		3023		3033		3043		3052		3063		3073		3083		3093		3103	
$(C_T'/\sigma)_4$ =	3014		3024		3034		3044		3054		3064		3074		3084		3094		3104	
$(C_T'/\sigma)_5$ =	3015		3025		3035		3045		3055		3065		3075		3085		3095		3105	
$(C_T'/\sigma)_6$ =	3016		3026		3036		3046		3056		3066		3076		3086		3096		3106	
$(C_T'/\sigma)_7$ =	3017		3027		3037		3047		3057		3067		3077		3087		3097		3107	
$(C_T'/\sigma)_8$ =	3018		3028		3038		3048		3058		3068		3078		3088		3098		3108	
$(C_T'/\sigma)_9$ =	3019		3029		3039		3049		3059		3069		3079		3089		3099		3109	
$(C_T'/\sigma)_{10}$ =	3020		3030		3040		3050		3060		3070		3080		3090		3100		3110	

ADVANCE RATIO μ_4 =	$(C_X/\sigma)_1$ =		$(C_X/\sigma)_2$ =		$(C_X/\sigma)_3$ =		$(C_X/\sigma)_4$ =		$(C_X/\sigma)_5$ =		$(C_X/\sigma)_6$ =		$(C_X/\sigma)_7$ =		$(C_X/\sigma)_8$ =		$(C_X/\sigma)_9$ =		$(C_X/\sigma)_{10}$ =	
	LOC	VALUE	LOC	VALUE	LOC	VALUE	LOC	VALUE	LOC	VALUE	LOC	VALUE	LOC	VALUE	LOC	VALUE	LOC	VALUE	LOC	VALUE
$(C_T'/\sigma)_1$ =	3111		3121		3131		3141		3151		3161		3171		3181		3191		3201	
$(C_T'/\sigma)_2$ =	3112		3122		3132		3142		3152		3162		3172		3182		3192		3202	
$(C_T'/\sigma)_3$ =	3113		3123		3133		3143		3153		3163		3173		3183		3193		3203	
$(C_T'/\sigma)_4$ =	3114		3124		3134		3144		3154		3164		3174		3184		3194		3204	
$(C_T'/\sigma)_5$ =	3115		3125		3135		3145		3155		3165		3175		3185		3195		3205	
$(C_T'/\sigma)_6$ =	3116		3126		3136		3146		3156		3166		3176		3186		3196		3206	
$(C_T'/\sigma)_7$ =	3117		3127		3137		3147		3157		3167		3177		3187		3197		3207	
$(C_T'/\sigma)_8$ =	3118		3128		3138		3148		3158		3168		3178		3188		3198		3208	
$(C_T'/\sigma)_9$ =	3119		3129		3139		3149		3159		3169		3179		3189		3199		3208	
$(C_T'/\sigma)_{10}$ =	3120		3130		3140		3150		3160		3170		3180		3190		3200		3210	

REPRODUCIBILITY OF THE ORIGINAL PAGE IS POOR

CRUISE PERFORMANCE **INPUT VALUES OF ROTOR POWER COEFFICIENT (C_P/σ) FOR COMBINATIONS OF μ, C_T'/σ & C_X/σ**

ROTOR PROPULSIVE FORCE COEFFICIENT

ADVANCE RATIO μ_5 =	$(C_X/\sigma)_1$ =		$(C_X/\sigma)_2$ =		$(C_X/\sigma)_3$ =		$(C_X/\sigma)_4$ =		$(C_X/\sigma)_5$ =		$(C_X/\sigma)_6$ =		$(C_X/\sigma)_7$ =		$(C_X/\sigma)_8$ =		$(C_X/\sigma)_9$ =		$(C_X/\sigma)_{10}$ =	
	LOC	VALUE	LOC	VALUE	LOC	VALUE	LOC	VALUE	LOC	VALUE	LOC	VALUE	LOC	VALUE	LOC	VALUE	LOC	VALUE	LOC	VALUE
$(C_T'/\sigma)_1$ =	3211		3221		3231		3241		3251		3261		3271		3281		3291		3301	
$(C_T'/\sigma)_2$ =	3212		3222		3232		3242		3252		3262		3272		3282		3292		3302	
$(C_T'/\sigma)_3$ =	3213		3223		3233		3243		3253		3263		3273		3283		3293		3303	
$(C_T'/\sigma)_4$ =	3214		3224		3234		3244		3254		3264		3274		3284		3294		3304	
$(C_T'/\sigma)_5$ =	3215		3225		3235		3245		3255		3265		3275		3285		3295		3305	
$(C_T'/\sigma)_6$ =	3216		3226		3236		3246		3256		3266		3276		3286		3296		3306	
$(C_T'/\sigma)_7$ =	3217		3227		3237		3247		3257		3267		3277		3287		3297		3307	
$(C_T'/\sigma)_8$ =	3218		3228		3238		3248		3258		3268		3278		3288		3298		3308	
$(C_T'/\sigma)_9$ =	3219		3229		3239		3249		3259		3269		3279		3289		3299		3309	
$(C_T'/\sigma)_{10}$ =	3220		3230		3240		3250		3260		3270		3280		3290		3300		3310	
ADVANCE RATIO μ_6 =	$(C_X/\sigma)_1$ =		$(C_X/\sigma)_2$ =		$(C_X/\sigma)_3$ =		$(C_X/\sigma)_4$ =		$(C_X/\sigma)_5$ =		$(C_X/\sigma)_6$ =		$(C_X/\sigma)_7$ =		$(C_X/\sigma)_8$ =		$(C_X/\sigma)_9$ =		$(C_X/\sigma)_{10}$ =	
	LOC	VALUE	LOC	VALUE	LOC	VALUE	LOC	VALUE	LOC	VALUE	LOC	VALUE	LOC	VALUE	LOC	VALUE	LOC	VALUE	LOC	VALUE
$(C_T'/\sigma)_1$ =	3311		3321		3331		3341		3351		3361		3371		3381		3391		3401	
$(C_T'/\sigma)_2$ =	3312		3322		3332		3342		3352		3362		3372		3382		3392		3402	
$(C_T'/\sigma)_3$ =	3313		3323		3333		3343		3353		3363		3373		3383		3393		3403	
$(C_T'/\sigma)_4$ =	3314		3324		3334		3344		3354		3364		3374		3384		3394		3404	
$(C_T'/\sigma)_5$ =	3315		3325		3335		3345		3355		3365		3375		3385		3395		3405	
$(C_T'/\sigma)_6$ =	3316		3326		3336		3346		3356		3366		3376		3386		3396		3406	
$(C_T'/\sigma)_7$ =	3317		3327		3337		3347		3357		3367		3377		3387		3397		3407	
$(C_T'/\sigma)_8$ =	3318		3328		3338		3348		3358		3368		3378		3388		3398		3408	
$(C_T'/\sigma)_9$ =	3319		3329		3339		3349		3359		3369		3379		3389		3399		3409	
$(C_T'/\sigma)_{10}$ =	3320		3330		3340		3350		3360		3370		3380		3390		3400		3410	

REPRODUCIBLE PAGE NOT FILMED

ROTOR PERFORMANCE MAP
(ROTIND = 4)

	LOC	VALUE
ROTOR MAP NO.	3420	

	LOC	VALUE
b_{REF}	3421	
σ_{REF}	3422	
$\theta_{T_{REF}}$	3423	

HOVER PERFORMANCE

	LOC	VALUE
NO. OF C_T/σ'S	3424	

	LOC	VALUE
NO. OF M_{TIP}'S	3435	

VALUES OF C_T/σ

	LOC	VALUE
$(C_T/\sigma)_1$	3425	
$(C_T/\sigma)_2$	3426	
$(C_T/\sigma)_3$	3427	
$(C_T/\sigma)_4$	3428	
$(C_T/\sigma)_5$	3429	
$(C_T/\sigma)_6$	3430	
$(C_T/\sigma)_7$	3431	
$(C_T/\sigma)_8$	3432	
$(C_T/\sigma)_9$	3433	
$(C_T/\sigma)_{10}$	3434	

VALUES OF M_{TIP}

	LOC	VALUE
M_{T_1}	3436	
M_{T_2}	3437	
M_{T_3}	3438	
M_{T_4}	3439	
M_{T_5}	3440	
M_{T_6}	3441	

$$C_T/\sigma = 4T/\rho\pi D^2 V_T^2 N_R \sigma$$

INPUT VALUES OF F.M. FOR COMBINATIONS OF C_T/σ AND M_{TIP}

	M_{TIP_1} =		M_{TIP_2} =		M_{TIP_3} =		M_{TIP_4} =		M_{TIP_5} =		M_{TIP_6} =	
	LOC	VALUE	LOC	VALUE	LOC	VALUE	LOC	VALUE	LOC	VALUE	LOC	VALUE
$(C_T/\sigma)_1$ =	3442		3452		3462		3472		3482		3492	
$(C_T/\sigma)_2$ =	3443		3453		3463		3473		3483		3493	
$(C_T/\sigma)_3$ =	3444		3454		3464		3474		3484		3494	
$(C_T/\sigma)_4$ =	3445		3455		3465		3475		3485		3495	
$(C_T/\sigma)_5$ =	3446		3456		3466		3476		3486		3496	
$(C_T/\sigma)_6$ =	3447		3457		3467		3477		3487		3497	
$(C_T/\sigma)_7$ =	3448		3458		3468		3478		3488		3498	
$(C_T/\sigma)_8$ =	3449		3459		3469		3479		3489		3499	
$(C_T/\sigma)_9$ =	3450		3460		3470		3480		3490		3500	
$(C_T/\sigma)_{10}$ =	3451		3461		3471		3481		3491		3501	

NOTE: C_T IS IN "ROTOR" NOTATION

PRECEDING PAGE NOT FILMED
BLANK

ROTOR PERFORMANCE "MAP" (ROTIND = 4)

CRUISE PERFORMANCE

	LOC	VALUE
NO. OF PROPULSIVE FORCE /LIFT RATIOS (X/L)	3502	

	LOC	VALUE
NO. OF ROTOR LIFT COEFFICIENTS (C_T'/σ)	3509	

	LOC	VALUE
NO. OF ADVANCE RATIOS (μ)	3520	

VALUES OF X/L

	LOC	VALUE
$(X/L)_1$	3503	
$(X/L)_2$	3504	
$(X/L)_3$	3505	
$(X/L)_4$	3506	
$(X/L)_5$	3507	
$(X/L)_6$	3508	

VALUES OF C_T'/σ

	LOC	VALUE
$(C_T'/\sigma)_1$	3510	
$(C_T'/\sigma)_2$	3511	
$(C_T'/\sigma)_3$	3512	
$(C_T'/\sigma)_4$	3513	
$(C_T'/\sigma)_5$	3514	
$(C_T'/\sigma)_6$	3515	
$(C_T'/\sigma)_7$	3516	
$(C_T'/\sigma)_8$	3517	
$(C_T'/\sigma)_9$	3518	
$(C_T'/\sigma)_{10}$	3519	

VALUES OF μ

	LOC	VALUE
μ_1	3521	
μ_2	3522	
μ_3	3523	
μ_4	3524	
μ_5	3525	
μ_6	3526	
μ_7	3527	
μ_8	3528	
μ_9	3529	
μ_{10}	3530	

$$\mu = \frac{1.688 V_{KT}}{V_{TIP}}$$

$$C_T'/\sigma = \frac{\text{LIFT}}{\frac{\rho \pi D^2 V_T^2 \sigma_{MR} N_R}{4}}$$

$$X/L = \frac{\text{ROTOR PROPULSIVE FORCE}}{\text{ROTOR LIFT}}$$

NOTE: AT LEAST 3 VALUES OF X/L, C_T'/σ, AND μ MUST BE INPUT

PRECEDING PAGE NOT FILMED
BLANK

ROTOR PERFORMANCE "MAP"
(ROTIND = 4)

CRUISE PERFORMANCE

INPUT VALUES OF ROTOR L/D_E FOR COMBINATIONS OF μ, $\frac{C_T'}{\sigma}$ & X/L

ROTOR ADVANCE RATIO

PROPULSIVE FORCE /LIFT RATIO $(X/L)_1$	μ_1 =		μ_2 =		μ_3 =		μ_4 =		μ_5 =		μ_6 =		μ_7 =		μ_8 =		μ_9 =		μ_{10} =	
	LOC	VALUE	LOC	VALUE	LOC	VALUE	LOC	VALUE	LOC	VALUE	LOC	VALUE	LOC	VALUE	LOC	VALUE	LOC	VALUE	LOC	VALUE
$(C_T'/\sigma)_1$ =	3531		3541		3551		3561		3571		3581		3591		3601		3611		3621	
$(C_T'/\sigma)_2$ =	3532		3542		3552		3562		3572		3582		3592		3602		3612		3622	
$(C_T'/\sigma)_3$ =	3533		3543		3553		3563		3573		3583		3593		3603		3613		3623	
$(C_T'/\sigma)_4$ =	3534		3544		3554		3564		3574		3584		3594		3604		3614		3624	
$(C_T'/\sigma)_5$ =	3535		3545		3555		3565		3575		3585		3595		3605		3615		3625	
$(C_T'/\sigma)_6$ =	3536		3546		3556		3566		3576		3586		3596		3606		3616		3626	
$(C_T'/\sigma)_7$ =	3537		3547		3557		3567		3577		3587		3597		3607		3617		3627	
$(C_T'/\sigma)_8$ =	3538		3548		3558		3568		3578		3588		3598		3608		3618		3628	
$(C_T'/\sigma)_9$ =	3539		3549		3559		3569		3579		3589		3599		3609		3619		3629	
$(C_T'/\sigma)_{10}$ =	3540		3550		3560		3570		3580		3590		3600		3610		3620		3630	
PROPULSIVE FORCE /LIFT RATIO $(X/L)_2$	μ_1 =		μ_2 =		μ_3 =		μ_4 =		μ_5 =		μ_6 =		μ_7 =		μ_8 =		μ_9 =		μ_{10} =	
	LOC	VALUE	LOC	VALUE	LOC	VALUE	LOC	VALUE	LOC	VALUE	LOC	VALUE	LOC	VALUE	LOC	VALUE	LOC	VALUE	LOC	VALUE
$(C_T'/\sigma)_1$ =	3631		3641		3651		3661		3671		3681		3691		3701		3711		3721	
$(C_T'/\sigma)_2$ =	3632		3642		3652		3662		3672		3682		3692		3702		3712		3722	
$(C_T'/\sigma)_3$ =	3633		3643		3653		3663		3673		3683		3693		3703		3713		3723	
$(C_T'/\sigma)_4$ =	3634		3644		3654		3664		3674		3684		3694		3704		3714		3724	
$(C_T'/\sigma)_5$ =	3635		3645		3655		3665		3675		3685		3695		3705		3715		3725	
$(C_T'/\sigma)_6$ =	3636		3646		3656		3666		3676		3686		3696		3706		3716		3726	
$(C_T'/\sigma)_7$ =	3637		3647		3657		3667		3677		3687		3697		3707		3717		3727	
$(C_T'/\sigma)_8$ =	3638		3648		3658		3668		3678		3688		3698		3708		3718		3728	
$(C_T'/\sigma)_9$ =	3639		3649		3659		3669		3679		3689		3699		3709		3719		3729	
$(C_T'/\sigma)_{10}$ =	3640		3650		3660		3670		3680		3690		3700		3710		3720		3730	

FOLDOUT FRAME
FOLDOUT PAGE NOT FILMED

ROTOR PERFORMANCE "MAP"
(ROTIND = 4)

CRUISE PERFORMANCE

INPUT VALUES OF ROTOR L/D_E FOR COMBINATIONS OF μ, $\frac{C_T'}{\sigma}$ & X/L

ROTOR ADVANCE RATIO

PROPULSIVE FORCE /LIFT RATIO	μ_1 =		μ_2 =		μ_3 =		μ_4 =		μ_5 =		μ_6 =		μ_7 =		μ_8 =		μ_9 =		μ_{10} =	
$(X/L)_3$	LOC	VALUE	LOC	VALUE	LOC	VALUE	LOC	VALUE	LOC	VALUE	LOC	VALUE	LOC	VALUE	LOC	VALUE	LOC	VALUE	LOC	VALUE
$(C_T'/\sigma)_1$ =	3731		3741		3751		3761		3771		3781		3791		3801		3811		3821	
$(C_T'/\sigma)_2$ =	3732		3742		3752		3762		3772		3782		3792		3802		3812		3822	
$(C_T'/\sigma)_3$ =	3733		3743		3753		3763		3773		3783		3793		3803		3813		3823	
$(C_T'/\sigma)_4$ =	3734		3744		3754		3764		3774		3784		3794		3804		3814		3824	
$(C_T'/\sigma)_5$ =	3735		3745		3755		3765		3775		3785		3795		3805		3815		3825	
$(C_T'/\sigma)_6$ =	3736		3746		3756		3766		3776		3786		3796		3806		3816		3826	
$(C_T'/\sigma)_7$ =	3737		3747		3757		3767		3777		3787		3797		3807		3817		3827	
$(C_T'/\sigma)_8$ =	3738		3748		3758		3768		3778		3788		3798		3808		3818		3828	
$(C_T'/\sigma)_9$ =	3739		3749		3759		3769		3779		3789		3799		3809		3819		3829	
$(C_T'/\sigma)_{10}$ =	3740		3750		3760		3770		3780		3790		3800		3810		3820		3830	
PROPULSIVE FORCE /LIFT RATIO	μ_1 =		μ_2 =		μ_3 =		μ_4 =		μ_5 =		μ_6 =		μ_7 =		μ_8 =		μ_9 =		μ_{10} =	
$(X/L)_4$	LOC	VALUE	LOC	VALUE	LOC	VALUE	LOC	VALUE	LOC	VALUE	LOC	VALUE	LOC	VALUE	LOC	VALUE	LOC	VALUE	LOC	VALUE
$(C_T'/\sigma)_1$ =	3831		3841		3851		3861		3871		3881		3891		3901		3911		3921	
$(C_T'/\sigma)_2$ =	3832		3842		3852		3862		3872		3882		3892		3902		3912		3922	
$(C_T'/\sigma)_3$ =	3833		3843		3853		3863		3873		3883		3893		3903		3913		3923	
$(C_T'/\sigma)_4$ =	3834		3844		3854		3864		3874		3884		3894		3904		3914		3924	
$(C_T'/\sigma)_5$ =	3835		3845		3855		3865		3875		3885		3895		3905		3915		3925	
$(C_T'/\sigma)_6$ =	3836		3846		3856		3866		3876		3886		3896		3906		3916		3926	
$(C_T'/\sigma)_7$ =	3837		3847		3857		3867		3877		3887		3897		3907		3917		3927	
$(C_T'/\sigma)_8$ =	3838		3848		3858		3868		3878		3888		3898		3908		3918		3928	
$(C_T'/\sigma)_9$ =	3839		3849		3859		3869		3879		3889		3899		3909		3919		3929	
$(C_T'/\sigma)_{10}$ =	3840		3850		3860		3870		3880		3890		3900		3910		3920		3930	

PRECEDING PAGE NOT FILMED
BLANK

BOEING VERTOL COMPANY
A DIVISION OF THE BOEING COMPANY

HESCOMP HELICOPTER SIZING AND PERFORMANCE
COMPUTER PROGRAM B-91

SHEET NO.	CASE NO.
5 OF 5	

ROTOR PERFORMANCE "MAP"
(ROTIND = 4)

CRUISE PERFORMANCE

INPUT VALUES OF ROTOR L/D_E FOR COMBINATIONS OF μ, $\frac{C_T'}{\sigma}$, & X/L

ROTOR ADVANCE RATIO

PROPULSIVE FORCE /LIFT RATIO $(X/L)_5$	μ_1 =		μ_2 =		μ_3 =		μ_4 =		μ_5 =		μ_6 =		μ_7 =		μ_8 =		μ_9 =		μ_{10} =	
	LOC	VALUE	LOC	VALUE	LOC	VALUE	LOC	VALUE	LOC	VALUE	LOC	VALUE	LOC	VALUE	LOC	VALUE	LOC	VALUE	LOC	VALUE
$(C_T'/\sigma)_1$ =	3931		3941		3951		3961		3971		3981		3991		4001		4011		4021	
$(C_T'/\sigma)_2$ =	3932		3942		3952		3962		3972		3982		3992		4002		4012		4022	
$(C_T'/\sigma)_3$ =	3933		3943		3953		3963		3973		3983		3993		4003		4013		4023	
$(C_T'/\sigma)_4$ =	3934		3944		3954		3964		3974		3984		3994		4004		4014		4024	
$(C_T'/\sigma)_5$ =	3935		3945		3955		3965		3975		3985		3995		4005		4015		4025	
$(C_T'/\sigma)_6$ =	3936		3946		3956		3966		3976		3986		3996		4006		4016		4026	
$(C_T'/\sigma)_7$ =	3937		3947		3957		3967		3977		3987		3997		4007		4017		4027	
$(C_T'/\sigma)_8$ =	3938		3948		3958		3968		3978		3988		3998		4008		4018		4028	
$(C_T'/\sigma)_9$ =	3939		3949		3959		3969		3979		3989		3999		4009		4019		4029	
$(C_T'/\sigma)_{10}$=	3940		3950		3960		3970		3980		3990		4000		4010		4020		4030	
PROPULSIVE FORCE /LIFT RATIO $(X/L)_6$	μ_1 =		μ_2 =		μ_3 =		μ_4 =		μ_5 =		μ_6 =		μ_7 =		μ_8 =		μ_9 =		μ_{10} =	
	LOC	VALUE	LOC	VALUE	LOC	VALUE	LOC	VALUE	LOC	VALUE	LOC	VALUE	LOC	VALUE	LOC	VALUE	LOC	VALUE	LOC	VALUE
$(C_T'/\sigma)_1$ =	4031		4041		4051		4061		4071		4081		4091		4101		4111		4121	
$(C_T'/\sigma)_2$ =	4032		4042		4052		4062		4072		4082		4092		4102		4112		4122	
$(C_T'/\sigma)_3$ =	4033		4043		4053		4063		4073		4083		4093		4103		4113		4123	
$(C_T'/\sigma)_4$ =	4034		4044		4054		4064		4074		4084		4094		4104		4114		4124	
$(C_T'/\sigma)_5$ =	4035		4045		4055		4065		4075		4085		4095		4105		4115		4125	
$(C_T'/\sigma)_6$ =	4036		4046		4056		4066		4076		4086		4096		4106		4116		4126	
$(C_T'/\sigma)_7$ =	4037		4047		4057		4067		4077		4087		4097		4107		4117		4127	
$(C_T'/\sigma)_8$ =	4038		4048		4058		4068		4078		4088		4098		4108		4118		4128	
$(C_T'/\sigma)_9$ =	4039		4049		4059		4069		4079		4089		4099		4109		4119		4129	
$(C_T'/\sigma)_{10}$=	4040		4050		4060		4070		4080		4090		4100		4110		4120		4130	

PRECEDING PAGE BLANK NOT FILMED

5.3 PROGRAM INPUT

5.3.1 Program Variables

AF	Activity factor (per blade) of propeller
AR	Wing aspect ratio
AR_{AP}	Aft rotor pylon aspect ratio (tanden rotor helicopter)
AR_{FP}	Forward rotor pylon aspect ratio (tandem rotor helicopter)
AR_{HT}	Horizontal tail aspect ratio
AR_{VT}	Vertical tail aspect ratio
b (b_{MR}, b_{TR})	Blade number per rotor or propeller
$b_{BS}/d_{\bar{NI}}$	Ratio of auxiliary independent engine nacelle strut span to nacelle diameter
b_W/D	Ratio of wing span to main rotor diameter
$\bar{C}$	Tail rotor/fin blockage factor
C_{D_B}	Baseline rotor cruise profile drag coefficient (input in rotor "cycle")
$C_{D_{BO}}$	Baseline rotor hover profile drag coefficient (input in rotor "cycle")
$C_{D_{AP}}$	Aft rotor pylon profile drag coefficient at $R_e=10^7$ (based on aft pylon planform area)
$C_{D_{FP}}$	Forward rotor pylon profile drag coefficient at $R_e=10^7$ (based on forward pylon max frontal area)
$C_{D_{CSMR}}$	Main rotor hub center section profile drag coefficient (based on center section frontal area)
$C_{D_{CSTR}}$	Tail rotor hub center section profile drag coefficient (based on center section frontal area)
$C_{D_{HT}}$	Profile drag coefficient of horizontal tail at $R_e=10^7$ (based on horizontal tail planform area)

C_{DN}	Profile drag coefficient of primary engine nacelles at $R_e=10^7$ (based on wetted area of all nacelles)
C_{DNI}	Profile drag coefficient of auxiliary independent engine nacelle at $R_e=10^7$ (based on wetted area of all nacelles)
C_{DNS}	Profile drag coefficient of auxiliary independent engine nacelle strut at $R_e=10^7$ (based on wetted area of strut(s))
$C_{D_{SHMR}}$	Main rotor hub shank profile drag coefficient (based on shank frontal area)
$C_{D_{SHTR}}$	Tail rotor hub shank profile drag coefficient (based on shank frontal area)
C_{DVT}	Profile drag coefficient of vertical tail at $R_e=10^7$ (based on vertical tail planform area)
C_{DWi}	Profile drag coefficient of wing at $R_e=10^7$ (based on wing planform area)
C_F/C	Ratio of download alleviating flap chord to wing chord
$\Delta C.G.$	Helicopter cg travel (ft)
$\Delta C.G._{R.}$	Location of main rotor in the longitudinal direction relative to the aircraft operating weight empty (OWE) cg position (ft)
C_{L_W}	Wing lift coefficient
C_{L_D}	Wing design lift coefficient
$C_{L_{DP}}$	Wing operating lift coefficient at cruise condition for engine sizing
$C_{L_{DES}}$	Tail fin design lift coefficient
$C_{L_{FIN}}$	Tail fin cruise lift coefficient
C_{Li}	Propeller integrated design lift coefficient
$C_{\ell\alpha}$	Two-dimensional wing lift coefficient slope (Rad. $^{-1}$)

C_P	Propeller power coefficient ($550\ HP/\rho\pi^3 D^5$)
C_{PH}/σ	Ratio of rotor power coefficient to rotor solidity ($C_{PH}/\sigma = 550\ RHP/\rho AV^3\sigma$)
C_T	Propeller thrust coefficient ($Thrust/\rho n^2 D^4$)
C_{T_H}	Rotor thurst coefficient ($Thrust/\rho AV_{TIP}^2$)
(C_T/σ)	Ratio of thrust coefficient to rotor solidity (helicopter $C_T = Thrust/PAV_{TIP}2$), includes (C_T/σ), $(C_T/\sigma)_{Des\ (H)}$, $(C_T/\sigma)_{CR}$
$(C_{TG}/C_{T_{NET}})$	Ratio of tail rotor total thrust coefficient to net thrust coefficient, where $C_{T_{NET}} = C_{TG}$-Fin blocking losses
C_X/σ	Rotor propulsive thrust coefficient divided by main rotor solidity. Used in defining rotor limits $C_X/\sigma = \dfrac{\text{Thrust required}}{\dfrac{\rho\ \pi D_{MR}^2 N_R V_{TIP}^2\ \sigma MR}{4}}$
D_{MR}	Main rotor diameter (feet)
D_{TR}	Tail rotor diameter (feet)
D_{TRE}/D_{FAN}	Equivalent tail rotor diameter/shrouded tail rotor/fan diameter used to simulate effect of shrouded tail rotor/fan
D_{PROP}	Propeller diameter (feet)
d_i	Position of inboard underwing store (fraction of wing semi-span)
d_o	Position of outboard underwing store (fraction of wing semi-span)
$d_{T\bar{T}B}/d_{\bar{T}B}$	Ratio of average tail boom tip diameter to average tail boom diameter

EAS	Equivalent airspeed required during climb and/or descent
e	Span loading efficiency factor
ΔF_e	Increment in equivalent flat plate area parasite drag of fuselage (ft^2)
ΔF.M.	Incremental figure of merit added to results obtained when using "short form method". Input only if ROTIND = 1
F^*_N	Auxiliary independent engine maximum static thrust at seal level, standard conditions (total thrust for all engines)
$\Delta F_{e_{CL}}$	Increment in equivalent flat plate area parasite drag (climb performance segment) - ft^2
$\Delta F_{e_{CR}}$	Increment in equivalent flat plate area parasite (cruise performance segment) - ft^2
$\Delta F_{e_{DSC}}$	Increment in equivalent flat plate area parasite drag (descent performance segment) - ft^2
$\Delta F_{e_{LOITER}}$	Increment in equivalent flat plate area parasite drag (loiter performance segment) - ft^2
$F_N/\delta F_N^*$	Referred thrust for turbojet/fan engine cycles
g_{RQMT}	Total maneuver g requirement helicopter must satisfy (wing + rotor) - g
g_{ROT}	Maneuver g's which rotor must carry. In the case of a pure helicopter, $g_{RQMT} = g_{ROT}$
g/S	Tandem rotor gap/stagger ratio
$g_{MR/TR}$	Gap between tail rotor disc and main rotor disc (ft)
(GW/F_e)	Ratio of configuration design gross weight to equivalent flat plate area parasite drag $(lb/ft)^2$
h'/h_F	Ratio of wing height on fuselage (relative to the bottom of the fuselage), h', to the total fuselage height, h_F.
HEADWIND	Headwind during cruise (knots)

h_O	Initial altitude at start of mission (ft)
$h_{C(C)}$	Cruise altitude for sizing main rotor solidity (ft)
h_C	Cruise altitude for sizing primary engines (ft)
$h_{BF/D}$	Ratio of fuselage bottom height above ground to main rotor diameter
h_{FINAL}	Final altitude for transfer altitude segment (SGTIND=9)
h_{P_2}	Aft rotor pylon height (ft)
h_{P_1}	Forward rotor pylon height (ft)
h_{TO}	Takeoff altitude for sizing engines (ft)
h_{max}	Maximum altitude during climb (ft) or during transfer altitude (ft)
h_{min}	Minimum altitude during descent (ft)
Δh	Step size for climb or descent (ft)
h_F	Height of fuselage (ft)
J	Propeller advance ratio, $J = V/nD$
k_3	Primary engine weight factors
k_4	Primary engine weight factors
k_{amd}	Main rotor weight factor
k_{AEI}	Auxiliary engine installation weight factor
k_B	Body group weight factor
k_{CC}	Cockpit controls weight factor
k_{FS}	Fuel system weight factor
k_{FW}	Fixed wing controls weight factor
k_{LG}	Landing gear weight factor

k_{MC}	Miscellaneous controls weight factor
k_{MG}	Main landing gear weight factor
k_{PEI}	Primary engine installation weight factor
k_{RC}	Main rotor controls weight factor
k_{RCA}	Auxiliary rotor controls weight factor
k_{SAS}	Stability Augmentation System (SAS) weight factor
k_{SC}	Main rotor system controls weight factor
k_{SCA}	Auxiliary rotor system controls weight factor
k_{TM}	Tilt mechanism weight factor
$k_{T.STING}$	Tail boom (on single rotor helicopter) length extending aft of tail rotor center as a fraction of tail rotor radius
k_{WW}	Detailed wing weight factor
k_{ZZZ}	Single rotor helicopter yaw moment of inertia adjustment factor
K_1	Main rotor controls weight factor
K_2	Main rotor system controls weight multiplicative factor
K_3	Fixed wing controls weight multiplicative factor
K_4	Auxiliary rotor controls weight multiplicative factor
K_5	Auxiliary rotor system controls weight multiplicative factor
K_6	Body weight multiplicative factor
K_7	Landing gear weight multiplicative factor
K_8	Wing weight multiplicative factor
K_9	Horizontal tail weight multiplicative factor
K_{10}	Primary nacelle weight multiplicative factor

K_{11}	Auxiliary nacelle weight multiplicative factor
K_{12}	Primary rotor blade weight multiplicative factor
K_{13}	Primary rotor hub weight multiplicative factor
K_{14}	Tail rotor weight multiplicative factor
K_{15}	Auxiliary rotor weight multiplicative factor
K_{16}	Primary drive system weight multiplicative factor
K_{17}	Auxiliary drive system weight multiplicative factor
K_{18}	Primary engine weight multiplicative factor
K_{19}	Auxiliary engine weight multiplicative factor
K_{20}	Tail rotor drive system weight multiplicative factor
k_{AIA}	Auxiliary air induction system weight factor
k_{AIP}	Primary air induction system weight factor
k_{ADS}	Auxiliary drive system weight factor
k_{ADSZ}	Auxiliary drive system weight factor (number of gears in system)
$K_{ALT.\ PAYL.}$	Ratio of alternate payload increment to design payload (used in XMSN sizing)
K_{AP}	Aft rotor pylon multiplicative drag factor
k_{AR}	Auxiliary rotor weight factor
k_{BLFD}	Blade fold weight factor
k_{CLF}	Crash load factor
K_{FP}	Forward rotor pylon multiplicative drag factor
K_{C_1}	Rotor retreating blade stall profile drag parameters (input in rotor "cycle")
K_{C_2}	Rotor retreating blade stall profile drag parameters (input in rotor "cycle")

K_{C_3}, K_{C_4}, K_{C_5}	Rotor advancing tip mach number compressibility drag parameters (input in rotor "cycle")
K_F	Fuselage multiplicative drag factor
K_{FED}	Trend constant input with GW/Fe when DRGIND = 2
K_{FI}	Auxiliary independent engines fuel flow multiplicative factor (used in TAXI)
K_{FF}	Fuel flow multiplicative factor
K_{FULS}	Fraction of fixed useful load located in cockpit area
K_{H1}	Rotor (hover) blade profile drag parameter (input in rotor "cycle")
K_{H2}	Rotor blade (hover) compressibility drag parameter (input in rotor "cycle")
K_{H3}	Rotor blade (hover) compressibility drag parameter (input in rotor "cycle")
K_{H4}	Rotor blade (hover) drag divergence Mach number parameter (input in rotor "cycle")
K_{HOV_A}	Rotor hover induced power factor (input in rotor "cycle")
K_{HT}	Horizontal tail multiplicative drag factor
K_N	Primary nacelle multiplicative drag factor
$K_{P_{CLIMB}}$	Helicopter forward flight climb efficiency
k_{NAC}	Primary cowling weight factor (psf)
k_{NACA}	Auxiliary cowling weight factor (psf)
K_{NI}	Auxiliary independent engine nacelle multiplicative drag factor
k_{NS}	Nacelle strut weight factor
k_{PA}	Auxiliary rotor weight factor

k_{PEI}	Primary engine installation weight factor
$K_{P_{DESCENT}}$	Main rotor descent efficiency
k_{PDS}	Primary drive system weight factor
k_{PDSZ}	Primary drive system weight factor (number of gears in system)
k_{PH}	Primary hub weight factor
K_{PN}	Ratio of power available at specified N_{II} to power available at optimum N_{II}
K_{PR}	Correction factor for engine power to account for Reynolds number effects
k_{PRB}	Primary rotor blade weight factor
K_{HPIM}	Main rotor hub/shank multiplicative drag factor
K_{HPIT}	Tail rotor hub/shank multiplicative drag factor
k_{RBF}	Primary rotor blade weight factor
K_{TBBS}	Weight of tail boom as a fraction of total fuselage weight
k_{TR}	Tail rotor weight factor
k_{TRDS}	Tail rotor drive system weight factor
k_{TRS}	Tail rotor solidity multiplicative factor (used to determine tail rotor solidity)
K_{VT}	Vertical tail multiplicative drag factor
k	Auxiliary rotor weight factor
K_W	Wing multiplicative drag factor
k_{WP}	Wing weight/area factor (psf)
k_{WS}	Wing stores only weight trend factor
K_Z	Vertical tail fin height factor

L/D_E	Rotor lift/effective drag ratio
LF	Wing unload factor
$\ell AIA/\ell e_A$	Ratio of air induction system length to engine length (auxiliary independent engines)
$\ell AIP/\ell e$	Ratio of air induction system length to engine length (primary engines)
ℓCONST DIA(ℓc)	Constant diameter section (cabin) length (ft)
ℓRW	Length of ramp well (ft)
ℓTH	Horizontal tail moment arm (ft) - measured from rotor ℄ to tail C/4
$\ell TH'$	Ratio of horizontal tail moment arm to main rotor radius
$(\ell/d)_p$	Fineness ratio of aircraft nose section
$(\ell/d)_T$	Fineness ratio of aircraft tail section
$(\ell T_B/d_{TB})$	Fineness ratio of tail boom (single rotor helicopter)
MACH	Mach number required during climb and/or descent
M_{LF}	Maneuver load factor (g's)
M_{MO}	Maximum operating Mach number
M_{DO}	Baseline rotor advancing tip compressibility drag rise Mach number (input in rotor "cycle")
M_{DBO}	Baseline rotor hover compressibility drag rise (lift=0) Mach No. (input in rotor "cycle")
M_{TIP}	Rotor hover tip Mach No.
N	Rotor loading (rotor lift/GW)
N_P	Number of primary engines
N_{PI}	Number of auxiliary independent engines
N_{PSD}	Number of primary engines inoperative (for engine sizing)

$N_{PSD(\ )}$	Number of primary engines shut down during cruise, loiter, climb or descent
$(N_{PSD})_c$	Number of primary engines shut down during cruise (for engine sizing)
$N_{PSD_i(\ )}$	Number of auxiliary independent engines shut down during cruise, loiter, climb or descent
N_{PROP}	Number of propellers
N_R	Number of rotors
$N_{IMAX}/N_I{}^*$	Gas generator RPM limit - ratio of max gas generator RPM to RPM at maximum static power, sea level, standard
$N_I/N_I{}^{*)}{}_{MAX}$	Gas generator referred RPM limit (θ = temperature ratio @ compression face), this input simulates a restriction on compression speed
$N_{II}/N_{II_{OPT}}$	Ratio of operating power turbine speed to optimum power turbine speed (input when N2IND = 2)
(N_{II}/N_{IIMAX})	Ratio of operating power turbine speed to maximum power turbine speed (input for both primary and auxiliary independent engines in performance segments 1 - 6)
$(N_{IIMAX}/N_{II}{}^*)$	Power turbine speed limit ratio of maximum power turbine speed to power turbine speed at maximum static power, sea level, standard
$(N_{II}/N_{IIMAX})_c$	Ratio of operating power turbine speed to maximum power turbine speed (input when sizing primary engines for takeoff)
$(N_{II}/N_{IIMAX})_i$	Ratio of operating power turbine speed to maximum power, turbine speed (input when sizing auxiliary independent engines for cruise)
$(N_{II}/N_{IIMAX})_{TO}$	Ratio of operating power turbine speed to maximum power turbine speed (input when sizing primary engines for cruise)
((O/L)/D)	Tandem rotor overlap/main rotor diameter ratio
OWE	Operating weight empty (pounds)
PEHF	Primary engine power fraction. Required when TOLIND = 2 and 4

Q_{MAX}/Q^*	Ratio of maximum torque limit to torque developed at sea level static standard day conditions
R_O	Initial range at start of mission (nautical miles)
R_{max}	Range at end of cruise and/or descent
RM_I	Wing relief as percentage of GW
ΔR	Step size for cruise (nautical miles)
R/D	Rate of descent (fpm)
$(Re/\ell)_i$	Mean Reynolds number per foot for mission
S_{HT}	Area of horizontal tail. Used when HTIND = 1
S_W	Wing planform area (ft^2)
$\frac{SHP_{MRX}}{SHP^*_{MR}}$	Ratio of main rotor drive system XMSN rating to main rotor design power
$\frac{SHP_{TRX}}{TRP^*}$	Ratio of tail rotor drive system XMSN rating to tail rotor design power
$SHP/\delta\sqrt{\theta}$ SHP*	Referred power for turboshaft engine cycles
$\frac{SHP_{AUX}}{SHP^*_{AUX}}$	Ratio of auxiliary propulsion drive system XMSN rating to auxiliary propeller design power
SHP^*_i	Auxiliary independent engine installed power (total for all engines)
SHP^*_P	Primary engine installed power (total for all engines)
SHP_{ACC}	Accessory power losses (SHP)
SHP_E/SHP^*	Ratio of design engine rating to maximum S.L. static (STD DAY) engine power
$\Delta S/S_{STR}$	Ratio of incremental auxiliary independent engine nacelle strut planform area to auxiliary independent engine nacelle strut planform area

ΔS_{WET}	Incremental wetted area of aircraft (ft^2)
$\Delta S_{WET}/S_F$	Incremental wetted area of airplane ratioed to fuselage wetted area
$(T/A)_{NET}$	Net tail rotor disc loading(psf)
TAS	True airspeed (knots)
T_{AUX}/T_{TOT}	Ratio of thrust produced by auxiliary propulsive device to total helicopter thrust required
TFEF	Tail fin aspect ratio effectiveness factor
TFI	Turbine inlet temperature (flight idle power setting), or input on engine cycle sheets
TGI	Turbine inlet temperature (ground idle power setting), or input on engine cycle sheets
TMAX	Turbine inlet temperature (maximum power setting), or input on engine cycle sheets
TMIL	Turbine inlet temperature (military power setting), or input on engine cycle sheets
TNP	Turbine inlet temperature (normal power setting) or input on engine cycle sheets
T/W	Configuration thrust/weight ratio (hover)
$(T/W)_D$	Configuration design thrust/weight ratio (hover)
$(T_{AUX}/T_{TOT})_C$	Ratio of thrust produced by auxiliary propulsive device to total helicopter thrust required. This value input as design point for sizing primary or auxiliary independent engines in cruise.
$\Delta T_{in_{CE}}$	Increment in ambient temperature for primary engine sizing at cruise condition (°R)
$\Delta T_{in_{TO}}$	Increment in ambient temperature for engine sizing at takeoff conditions (°R)
T/θ	Referred turbine temperature (°R)
t_O	Initial time at start of mission (hours)
t_T	Incremental time for taxi (hours)

t_H	Incremental time for hover (hours)
t_L	Incremental time for loiter (hours)
t_{FW}	Incremental time for change of fuel weight (hours)
t_{PW}	Incremental time forc hange of payload weight (hours)
Δt_H	Step size for hover (hours)
Δt_L	Step size for loiter (hours)
$(t/C)_R$	Wing root thickness to chord ratio
$(t/C)_T$	Wing tip thickness to chord ratio
$(t/C)_{HT}$	Horizontal tail mean thickness to chord ratio
$(t/C)_{VT}$	Vertical tail mean thickness to chord ratio
$(t/C)R_A$	Aft rotor pylon root thickness to chord ratio
$(t/C)R_F$	Forward rotor pylon root thickness to chord ratio
$(t/C)T_A$	Aft rotor pylon tip thickness to chord ratio
$(t/C)T_F$	Forward rotor pylon tip thickness to chord ratio
$(t/C)_{.25R}$	Main rotor blade thickness to chord ratio @0.25 rotor radius
V_C	Design cruise speed for engine sizing (kts)
V_{CEH1}, V_{CEH2}	Main rotor vertical R/C efficiency factors
V_{DES}	Flight speed at which single rotor helicopter vertical tail is sized to provide complete directional stability in the event of the loss of the tail rotor (kt)
V_{DIVE}	Dive speed (knots EAS)
V_{in}	True airspeed for cruise during cruise segment with CRSIND = 2 (kt)

V_{MO}	Maximum operating equivalent airspeed (kt)
$(V_{R/C})_D$	Design vertical rate of climb (ft/min) used in sizing primary engines in hover
$V_{R/C}$	Vertical rate of climb (ft/min)
V_{TIP}	Main rotor design tip speed (pfs). Note: This is the tip speed corresponding to $N_{II}=N^*_{II}$
V_{TTR}	Tail rotor design tip speed (hover) -(fps)
V_{TIP_P}	Propeller design tip speed (fps)
$\bar{V}_H$	Horizontal tail volume coefficient
W_{APU}	Auxiliary power unit weight (lb)
W_{AV}	Avionics weight (lb)
W_{FE}	Weight of fixed equipment (lb)
W_{FUL}	Weight of fixed useful load (lb)
W_{FURN}	Furnishings and equipment weight (lb)
W_{G_O}	Initial gross weight at start of mission (lb)
W_i	Weight of inboard store
W_o	Weight of outboard store
W_{PL}	Weight of payload (lb)
W/A	Disc loading(psf)
W/S	Wing loading (psf)
$\dot{W}_{MAX}/\dot{W}^*$	Fuel flow limit - ratio of maximum fuel flow to fuel flow at maximum static power, sea level, standard
ΔW_{FC}	Flight controls group incremental weights (lb)
ΔW_P	Propulsion group incremental weight (lb)

ΔW_{ST}	Structures group incremental weight (lb)
ΔW_f	Increment in fuel weight during change of fuel weight subroutine (lb)
ΔW_{PL}	Increment in payload weight during change of payload weight subroutine (lb)
δW_f	Fuel required additive reserve factor
W_F	Width of fuselage (ft)
$\dot{W}_f/\delta\sqrt{\theta}\ F_N{}^*$	Referred fuel flow for turbojet/fan engine cycles
$\dot{W}_f/\delta\sqrt{\theta}\ SHP^*$	Referred fuel flow rate for primary engines (turboshaft engine cycles, lb/hr/SHP*)
$X_{ADS}/\Delta X_{ADS}$	Auxiliary independent drive system C.G. position aft of nose as a fraction of the distance between the auxiliary independent engine and the propeller
X_{AE}/ℓ_B	Auxiliary independent engine C.G. position aft of nose as a fraction of body length
X_{APU}/ℓ_B	Auxiliary power unit C.G. position aft of nose as a fraction of body length
X_{AR}	Propeller blade attachment point as a fraction of propeller radius
X_{AR}/ℓ_{TB}	Propeller position aft oft a body/tail boom junction as a fraction of tail boom length
X_{ASC}/ℓ_B	Auxiliary rotor (propeller) systems controls C.G. position aft of nose as a fraction of body length
X_{AV}/ℓ_B	Avionics C.G. position aft of nose as a fraction of body length
X_{CGF}/ℓ_B	Single rotor fuselage (minus tail boom) C.G. position aft of nose as a fraction of body length
X_{CMR}	Main rotor blade cutout (end of blade shank, beginning of rotor airfoil sections) position as a fraction of rotor radius

X_{CTR}	Tail rotor blade cutout (end of blade shank, beginning of rotor airfoil sections) position as a fraction of rotor radius
X_{FURN}/ℓ_B	Furnishings and equipment C.G. position aft of nose as a fraction of body length
XM/ℓ_B	Ratio of distance from tip of nose to rotor shaft, X_M, to main fuselage length (B) (single rotor helicopter)
X_{MG}/ℓ_B	Main landing gear position aft of nose as a fraction of body length
X_{MR}	Main rotor blade attachment point as a fraction of rotor radius
X_{NG}/ℓ_B	Nose landing gear position aft of nose as a fraction of body length
X_{PE}/ℓ_B	Primary engine C.G. position aft of nose as a fraction of body length
$X_{PDS}/\Delta X_{PDS}$	Primary drive system C.G. position aft of nose as a fraction of the distance between main and tail rotor centers
X_{SC}/ℓ_B	Rotor system controls C.G. position aft of nose as a fraction of body length
X_{TR}	Tail rotor blade attachment point as a fraction of rotor radius
$X1/\ell P$	Distance of forward rotor center from aircraft nose as a fraction of aircraft nose section length
X_2/ℓ_T	Distance of aft rotor center from aircraft tail cone as a fraction of aircraft tail section length
Y_{CL}	Clearance from inboard propeller tip to inboard propeller tip across fuselage (ft)
z_1, z_2, z_3	Primary engine nacelle dimensional factors

z_4, z_5, z_6	Auxiliary independent engine nacelle dimensional factors
α_{LO}	Wing airfoil section angle of zero lift
$\Lambda C/4$	Sweep angle of wing quarter chord (degrees)
λ	Taper ratio of wing
λ_{AP}	Taper ratio of aft rotor pylon
λ_{FP}	Taper ratio of forward rotor pylon
λ_H	Taper ratio of horizontal tail
λ_{VT}	Taper ratio of vertical tail
η_{P3}	Propeller propulsive efficiency for SGTIND = 3
η_{P5}	Propeller propulsive efficiency for SGTIND = 5
η_{P4}	Propeller propulsive efficiency for SGTIND = 4, 6 tabular function of Mach number
$\dot{\eta}_T$	Transmission efficiency
$\eta_{T_{AUX}}$	Transmission efficiency (auxiliary drive system)
ζ_{VT}	Vertical tail span overlap distance/tail rotor radius ratio - input as a function of tail rotor radius
ζ_2	Propeller over wing tip overlap (fraction of radius)
θ	Ambient temperature ratio, tabular function of altitude
$\theta_{T_{MR}}$	Main rotor blade twist (degrees)
$\theta_{T_{TR}}$	Tail rotor blade twist (degrees)

ξ_4	Primary engine dimensional factor
$\dot{\psi}$	Helicopter yaw rate, rad/sec
$\ddot{\psi}$	Helicopter yaw acceleration, rad/sec^2
σMR	Main rotor solidity ($\sigma=bc/\pi R$)
σTR	Tail rotor solidity ($\sigma=bc/\pi R$)
μ	Rotor forward flight advance ratio ($\mu = V_{FPS}/V_{TIP}$)

5.3.2 Program Indicators

Option Indicators

OPTIND	1 = size aircraft
	2 = calculate performance (specify initial gross weight)
	3 = calculate performance (specify operating weight empty)
OPTIONAL PRINT	0 = standard print
	1 = detailed print

Propulsion Indicator

AIPIND	1 = single gas generator connected to main rotor and auxiliary propulsion
	2 = independent gas generators
ENGIND	0 = turboshaft (power producing) cycle
	1 = turbofan or turbojet (thrust producing) cycle
ESCIND	1 = program will size engines for takeoff only
	2 = program will size engines for more critical choice of takeoff or cruise

NOTE: ESCIND is applicable only if FIXIND = 1

$FANOP_C$	0 = Tail rotor/fan operating in cruise (Nominal valve)
	1 = Tail rotor/fan shut down in cruise
$FANOP_H$	0 = Tail rotor/fan operating in hover (Nominal value)
	1 = Tail rotor/fan shut down in hover
FIXIND	0 = fixed size engines, user inputs maximum power
	1 = rubberized engines, program will calculate maximum power
FIXINDI	0 = user inputs fixed size auxiliary independent engines
	1 = program sizes auxiliary independent engines to meet cruise requirement
N1IND, N1INDI	0 = no N_I limit
	1 = N_I limit
N1θIND, N1θINDI	0 = no $N_I/\sqrt{\theta_1}$ limit
	1 = $N_I/\sqrt{\theta_1}$ limit
N2IND, N2INDI	0 = no N_{II} limit, engine operating at optimum N_{II}
	1 = N_{II} limit, engine operating at known value of N_{II} (in general nonoptimum)
POWIND	0 = maximum engine rating
	1 = military engine rating
QIND, QINDI	2 = normal engine rating
	0 = no torque limit
	1 = torque limit
RNOIND, RNOINDI	0 = no Reynolds number corrections
	1 = Reynolds number corrections

WDTIND, WDTINDI	0 = Reynolds number corrections
	1 = fuel flow limit
ROTIND	1 = performance calculated by short method
	2 = rotor map input, corrections applied
	3 = rotor map input, no corrections applied
	4 = rotor map (L/D_E) input, corrections applied
η_pIND	0 = user specifies "point" propeller efficiencies for climb, cruise and descent
	1 = user inputs propeller performance map
	2 = propeller performance automatically calculated within program

Aerodynamics Indicators

DRGIND	1 = drag build up by component, Reynolds number scaling
	2 = drag trend by input GW/F_e versus GW
OSWIND	0 = user inputs Oswald's efficiency (e)
	1 = program calculates Oswald's efficiency

Sizing Indicators

APHIND	1 = input aft pylon height
	2 = input gap/stagger ratio
AUXIND	1 = pure helicopter
	2 = including wings (only)
	3 = including auxiliary propulsion (only)
	4 = compound (wings and auxiliary propulsion)

b_WIND	1 = input span/diameter ratio
	2 = input wing aspect ratio
	3 = determined for propeller clearance
CNFIND	1 = single rotor
	2 = tandem rotor
FDMIND	1 = input overlap and rotor positions
	2 = input overlap and cabin length
	3 = input cabin length and rotor positions
HTIND	0 = no horizontal tail
	1 = input fixed size tail
	2 = input tail volume coefficient
MRPIND	0 = user inputs main rotor placement (single rotor)
	1 = program calculates main rotor positions based on simple mass balance
	2 = same as 1, except that in the case of a compound helicopter, the auxiliary drive system, propeller and auxiliary independent engines (if any) are assumed to be located on the wing.
RDMIND	1 = input main rotor diameter, σ
	2 = input W/A, σ
	3 = input diameter, C_T/σ
	4 = input W/A, C_T/σ
S_WIND	1 = input wing area
	2 = input wing loading
	3 = size for maneuver

TRDIND	0 = no tail rotor
	1 = use trend of diameter main/diameter tail = $f_n(W/A)_{MAIN}$
	2 = input diameter
	3 = input T/A
TRSIND	1 = input σ
	2 = input C_T/σ
VTFIND	1 = input aspect ratio and tail fin overlap
	2 = input directional stability required and tail fin overlap
	3 = input directional stability required and aspect ratio
XMSNIND	0 = main, tail, and auxiliary drive system ratings specified as fraction of primary engine installed power (in the case of a compound helicopter with auxiliary independent propulsion, the auxiliary independent drive system rating is specified as a fraction of the auxiliary independent engine installed power)
	1 = the drive system ratings calculated are equal to the product of the applicable multiplicative factors (SHP_{MRX}/SHP^*_{MR}, SHP_{TRX}/TRP^*, SHP_{ARX}/SHP^*_{AUX}) and the component (main tail, and auxiliary) power obtained from the proportional split (based on power required) of the total sea level standard maximum (installed) engine power.
	2 = Main, tail, and auxiliary drive system ratings specified at fraction of power required to hover or cruise at design conditions (more critical of the two conditions is selected).
	3 = Same as 2, except the most critical of the two design conditions is compared to the drive system rating required at an alternate payload/gross weight hover at the design point conditions. The most critical of these three conditions is selected.

4 = Same as 2, except that tail rotor drive system rating is selected independently of the main rotor drive system to match a specified fraction of power required to hover or cruise at design conditions (more critical of the two conditions is selected).

5 = Same as 3, except that the tail rotor drive system rating is selected independently of the main rotor drive system as in 4, and the most critical of the two design conditions is compared to the tail rotor drive system rating required at an alternate payload/gross weight hover at the design point conditions. The most critical of these three conditions is selected.

Flight Path Control Indicators

h_{OPT}IND

0 = cruise segments performed at specified altitude

1 = cruise segments preceded by climb or transfer altitude are performed at optimum altitude, constrained by an input maximum altitude

Mission Performance Indicators

CLMIND

1 = climb at maximum R/C

2 = climb at constant EAS

3 = climb at constant Mach No.

4 = climb at constant TAS

CRSIND

1 = cruise at cruise power

2 = cruise at constant true airspeed

3 = cruise at speed for best specific range

4 = cruise at speed for 99% of best specific range

5 = cruise - climb (constant W/δ) at speed for best specific range

6 = cruise - climb (constant W/δ) at speed for 99% of best specific range

DESIND	1 = descend at constant TAS
	2 = descend at constant EAS
	3 = descend at constant Mach No.
RMAXND	0 = descent flight path ends at specified terminal range (cruise segment must be input previous to descent)
	1 = checks specified terminal range, if predicted flight path will end beyond specified terminal range value, spiral descent path assumed at that point, if predicted flight path ends before reaching specified terminal range point, program prints SHALLOWER DESCENT REQUIRED
	2 = descent ends at specified minimum altitude, terminal range requirement not considered
	3 = fuel used and time required for descent calculated but no range credit given (i.e., spiral descent path)
SGTIND	0 = end of mission
	1 = taxi
	2 = takeoff, hover and landing
	3 = climb
	4 = cruise
	5 = descent
	6 = loiter
	7 = change of fuel weight
	8 = change of payload weight
	9 = transfer altitude
	100 = end of case

NOTE: Segments 1 through 6 can be used for reserve fuel calculations (gross weight reset following segment) by inputing 10X SGTIND; i.e., SGTIND = 10, 20, 30, 40, 50, or 60

TOLIND

1 = user inputs required thrust-to-weight ratio and $V_{R/C}$

2 = user inputs required fractions of maximum power and $V_{R/C}$

3 = same as 1 but analysis includes hover-in-ground effect

4 = same as 2 but analysis includes hover-in-ground effect

WGTIND

0 = restriction on maximum aircraft weight, weight cannot exceed gross weight.

1 = no restriction on aircraft weight (will only apply when running performance)

Atmosphere Indicator

ATMIND

0 = standard atmosphere

1 = non-standard atmosphere, user inputs single point value for increment in ambient temperature above standard day value

2 = non-standard atmosphere, user inputs table of temperature ratio as a function of altitude

AD-A046 367 BOEING VERTOL CO PHILADELPHIA PA F/G 1/3
HESCOMP. THE HELICOPTER SIZING AND PERFORMANCE COMPUTER PROGRAM--ETC(U)
NOV 74 S J DAVIS, J S WISNIEWSKI N62269-74-C-0757
UNCLASSIFIED D210-10699-2 NL

5 OF 6
AD A046367



6.0 PROGRAM OUTPUT

A reproduction of the program output for three sample cases is included in Section 7.0. The following discussion describes the program printout in general and lists the diagnostic error printouts which are possible.

6.1 DESCRIPTION OF PRINTOUT

The printout for HESCOMP consists of four types of information:

a. General
b. Input Data
c. Sizing Data (program output)
d. Mission Performance Data (for the "sized" helicopter)

The general information (item a) is printed out at the beginning of each new case. Each of the other groupings (input, sizing data, and performance data) starts on a new page. For cases with OPTIND = 2 or 3 (performance only), the sizing data is not printed out. The printout is described in detail below.

6.1.1 General Printout

6.1.1.1 Fixed Heading:

HESCOMP

HELICOPTER SIZING AND PERFORMANCE COMPUTER PROGRAM

Depending on the configuration options (CNFIND, AUXIND, AIPIND, ENGIND) chosen, one of the following statements will be printed out.

SINGLE ROTOR PURE HELICOPTER

SINGLE ROTOR WINGED HELICOPTER

SINGLE ROTOR COMPOUND HELICOPTER

SINGLE ROTOR COMPOUND HELICOPTER AUXILIARY INDEPENDENT T/SHAFT CRUISE PROPULSION

SINGLE ROTOR COMPOUND HELICOPTER AUXILIARY INDEPENDENT T/FAN OR T/JET CRUISE PROPULSION

SINGLE ROTOR AUXILIARY PROPULSION HELICOPTER

SINGLE ROTOR AUXILIARY PROPULSION HELICOPTER AUXILIARY INDEPENDENT T/SHAFT CRUISE PROPULSION

SINGLE ROTOR AUXILIARY PROPULSION HELICOPTER AUXILIARY INDEPENDENT T/FAN OR T/JET CRUISE PROPULSION

The printout for the tandem rotor configurations will be identical except for the substitution of TANDEM ROTOR for SINGLE ROTOR

6.1.1.2 Arbitrary Heading

An arbitary heading may be input by the user on a title card (see Section 5.2, input sheet for general information).

6.1.2 Input Data

All program input data is printed out as it appears on the data cards. Seven columns are printed. These correspond to the first location on the card, the number of variables on the card (from 1 to 5), and the values of these variables. With this information and a copy of the input sheets it is possible to determine the input value for any variable.

6.1.3 Sizing Data

This group is printed out only if OPTIND = 1. The data is represented by a symbol, followed by a written description, followed by the value with the units. For example:

WG/A	DISC LOADING	10.0 LB/SQFT

The data is printed out in groups, each group having a heading. The specific variables which are printed out will depend upon certain options chosen. Notations are made in the following list to show where this occurs.

6.1.3.1 Dimensional Data

Single Rotor Helicopter

Fuselage:

ℓ_F, ℓ_C, ℓ_B, ℓ_{TB}, X_M, w_F, S_F

Wing:

If AUXIND = 2 or 4 print AR, S_W, b_W, C_W, $\lambda_{c/4}$, λ, $(t/c)_T$,

W_G/S_W, G_{RW}, C_F/C

If AUXIND = 1 or 3 print NO WING USED

Horizontal Tail:

If HTIND = 1 or 2 print AR_{HT}, S_{HT}, b_{HT}, C_{HT}, λ_{HT}, L_{TH}

If HTIND = 0 print NO HORIZONTAL TAIL USED

Vertical Tail:

AR_{VT}, S_{VT}, b_{VT}, C_{VT}, λ_{VT}, Z_{TR}, ζ_{VT}, $(T/C)_{VT}$

Main Rotor Pylon:

AR, S_{FP}, FA_{FP}, H_{P_1}, C_{FP}, λ_{FP}, $(T/C)_R$, $(T/C)_T$

Primary Engine Nacelle:

ℓ_N, D_N, S_N

Auxiliary Independent Engine Nacelle:

If AIPIND = 2 print L_{NI}, D_{NI}, S_{NI}

Auxiliary Independent Engine Nacelle Strut:

If AIPIND = 2 print S_{STR}, b_{NS}, C_{NS}

Auxiliary Independent Propulsion:

If AIPIND = 2 and ENGIND = 1, print AUXIL[illegible]NDEPENDENT PROPULSION - TURBOFAN (OR TURBOJET) ENGIN.

If AIPIND = 1 print NO AUXILIARY INDEPENDENT ENGINE USED

Propeller (Auxiliary Propulsion):

If AUXIND = 3 or 4 and ENGIND = 0 print D_{AR}, AF, σ_{AR}, N_{RA}, NO. BLADES, V_{TIP}

If AUXIND = 1 or 2 print NO PROPELLER USED

Main Rotor:

D_{MR}, σ_{MR}, W_G/A, C_T/σ, N_R, NO BLADES, θ_{MR}, X_C, V_{TIP}

Tail Rotor:

D_{TR}, σ_{TR}, $(T/A)_{NET}$, C_T/σ, NO BLADES, θ_{TR}, X_{CTR}, G, V_{TIP}

Tandem Rotor Helicopter

Fuselage:

ℓ_F, ℓ_C, ΔX_1, ΔX_2, w_F, G/S, (O/L/D), S_F

Wing:

Same printout as single rotor helicopter

Forward Rotor Pylon:

AR, S_{FP}, FA_{FP}, H_{P_1}, C_{FP}, λ_{FP}, $(T/C)_R$, $(T/C)_T$

Aft Rotor Pylon:

AR, S_{AP}, H_{P_2}, C_{AP}, λ_{AP}, $(T/C)_R$, $(T/C)_T$

Primary Engine Nacelle:

ℓ_N, D_N, S_N

Auxiliary Independent Engine Nacelle:

Same printout as single rotor helicopter

Auxiliary Independent Engine Nacelle Strut:

Same printout as single rotor helicopter

Auxiliary Independent Propulsion:

Same printout as single rotor helicopter

Propeller (Auxiliary Propulsion):

Same printout as single rotor helicopter

Main Rotor:

Same printout as single rotor helicopter

6.1.3.2 Weights Data

Single and Tandem Rotor Helicopters

First print M_{LF}, G_{LF}, U_{LF}, then print,

Propulsion Group:

W_{PRG}, $K_{12}W_{PRB}$, $K_{13}W_{PH}$, W_{BF}, $K_{15}W_{AR}$, W_{DS}, $K_{16}W_{PDS}$, $K_{20}W_{TRDS}$, $K_{17}W_{ADS}$, $K_{18}W_{EP}$, $K_{19}W_{EA}$, W_{PEI}, W_{AEI}, W_{FS}, ΔW_P, W_P

Structures Group:

K_8W_W, W_{TG}, K_9W_{HT}, $K_{14}W_{TR}$, K_6W_B, K_7W_{LG}, W_{NG}, W_{MG}, W_{TES}, W_{PES}, W_{AES}, ΔW_{ST}, W_{ST}

Flight Controls Group:

W_{PFC}, W_{CC}, K_1W_{RC}, $K_{2\ SC}$, K_3W_{FW}, W_{TM}, W_{SAS}, W_{AFC}, K_4W_{RCA}, K_5W_{SCA}, W_{MC}, ΔW_{FC}, W_{FC}

Weight of Fixed Equipment:

W_{FE}

Weight Empty

WE

Fixed Useful Load

W_{FUL}

Operating Weight Empty

OWE

Payload

W_{PL}

Fuel

$(W_F)_A$

Gross Weight

WG

6.1.3.3 Rotor Data

Single Rotor Helicopter

ROTOR CYCLE NO. _____
(printed if ROTIND = 1)

ROTOR MAP NO. _____
(printed if ROTIND = 2)

FIXED MAIN ROTOR SOLIDITY INPUT
(printed if RDMIND = 1 or 2)

If RDMIND = 3 or 4, and depending on which solidity sizing requirement is most critical, one of the following statements will be printed out:

MAIN ROTOR SOLIDITY SIZED BY MANEUVER CONDITIONS
H = _____ FT., TEMP. = _____ DEG., V = _____ KT.
ROTOR MANEUVER G'S = _____, C_T/σ = _____

MAIN ROTOR SOLIDITY SIZED BY HOVER CONDITIONS
H = _____ FT., TEMP. = _____ DEG., T/W = _____
C_T/σ = _____

MAIN ROTOR SOLIDITY SIZED BY CRUISE CONDITIONS
H = _____ FT., TEMP. = _____ DEG., V = _____ KT.
ROTOR LIFT/GW FRACTION = _____ C_T/σ = _____

Which is followed by:

FIXED TAIL ROTOR SOLIDITY
(printed if TRSIND = 1)

TAIL ROTOR SIZED AT _____ TIMES THE SOLIDITY REQUIRED TO SATISFY HOVER ANTI-TORQUE REQUIREMENTS AT
H = _____ FT., TEMP. = _____ DEG.F., $C_{T_G}/C_{T_{NET}}$ = _____
(printed if TRSIND = 2 and $\psi = 0$, $\ddot{\psi} = 0$)

TAIL ROTOR SIZED AT _____ TIMES THE SOLIDITY REQUIRED TO SATISFY HOVERING TURN REQUIREMENTS AT

H	= _____	FT.
TEMP	= _____	F.
$C_{T_G}/C_{T_{NET}}$	= _____	DEG.
YAW RATE	= _____	RAD/SEC
YAW ACCELERATION	= _____	RAD/SEC^2
TAIL ROTOR POLAR MOM. OF INERTIA	= _____	SLUG/FT^2
HELICOPTER YAW MOM. OF INERTIA	= _____	SLUG/FT^2

(printed if TRSIND = 2 and $\dot{\psi}$ or $\ddot{\psi} \neq 0$.)

Tandem Rotor Helicopter

Main rotor data printout same as for single rotor helicopter.

6.1.3.4 Propulsion Data

Single Rotor Helicopter

PRIMARY PROPULSION CYCLE NO. _____
TURBOSHAFT ENGINE

_____ ENGINES

BHP*P MAX. STANDARD S.L. STATIC H.P. = _____H.P.

ENGINE SIZE WAS FIXED BY INPUT
(printed if FIXIND = 0)

IF ESCIND = 1 print;

ENGINE SIZED FOR TAKEOFF AT T/W = _____,
H = _____ FT., TEMP. = _____ DEG.F.
AND _____ ENGINES INOPERATIVE

If ESCIND = 2 either of the following statements are printed depending on which engine sizing requirement (hover or cruise) is critical.

ENGINE SIZED FOR TAKEOFF AT T/W = _____,
H = _____ FT., TEMP. = _____ DEG.F.
AND _____ ENGINES INOPERATIVE

ENGINE SIZED FOR CRUISE AT V_C = _____ KNOTS
H = _____ FT., TEMP. = _____ DEG.F.
AND _____ ENGINES INOPERATIVE

Which is followed by:

NO AUX. INDEPENDENT ENGINE CYCLE SELECTED
(printed if AUXIND = 3 or 4 and AIPIND = 1)

AUX. INDEPENDENT PROPULSION CYCLE NO. _____
(printed if AUXIND = 3 or 4 and AIPIND = 2)

IF ENGIND = 0.0, TURBOSHAFT ENGINE is printed
IF ENGIND = 1.0, either TURBOFAN or TURBOJET ENGINE is printed

_____ ENGINES

BHP*P MAX. STANDARD S.L. STATIC H.P. _____H.P.
(printed if ENGIND = 0.0)

T*P MAX. STANDARD S.L. STATIC THRUST _____ LBS.
(printed if ENGIND = 1.0)

ENGINE SIZE WAS FIXED BY INPUT
(printed if FIXINDI = 0.0)

ENGINE SIZED FOR CRUISE AT V_C _____ KNOTS
H = _____ FT., TEMP. = _____ DEG.F.
(printed if FIXINDI = 1.0)

MAIN DRIVE SYSTEM RATING _____H.P.
MAIN ROTOR DRIVE SYSTEM RATING _____H.P.

Depending on the transmission sizing option chosen (XMSNIND), and the results of the sizing, one of the following four statements will be printed:

XMSN SIZED AT _____ PERCENT OF TOTAL PRIMARY ENGINE INSTALLED POWER
MAX. STANDARD S.L. STATIC H.P.
(printed if XMSNIND = 1.0)

XMSN SIZED AT _____ PERCENT OF MAIN ROTOR HOVER POWER REQUIRED AT
H = _____ FT., TEMP. = _____ DEG.F.
(printed if XMSNIND = 2 or if XMSNIND = 3 and the alternate payload hover is not critical)

XMSN SIZED AT _____ PERCENT OF MAIN ROTOR HOVER POWER REQUIRED AT ALTERNATE
PAYLOAD = _____ LBS., ALTERNATE GROSS WEIGHT = _____LBS.
H = _____ FT., TEMP. = _____ DEG.F.
(printed if XMSNIND = 3 and the alternate payload hover is critical)

XMSN SIZED AT _____ PERCENT OF MAIN ROTOR CRUISE POWER REQUIRED AT V_C = _____ KT.,
H = _____ FT., TEMP. = _____ DEG.F.
(printed if XMSNIND = 2 or if XMSNIND = 3 and the alternate payload hover is not critical)

Which is followed by:

TAIL ROTOR DRIVE SYSTEM RATING _____H.P.
(printed if CNFIND = 1)

Depending on the transmission sizing option chosen (XMSNIND) and the results of the sizing, one of the following four statements will be printed:

XMSN SIZED AT _____ PERCENT OF TOTAL PRIMARY ENGINE INSTALLED POWER
MAX. STANDARD S.L. STATIC H.P.
(printed if XMSNIND = 1.0)

XMSN SIZED AT _____ PERCENT OF TAIL ROTOR HOVER POWER REQUIRED
AT H = _____ FT., TEMP. = _____ DEG.F.
(printed if XMSNIND = 2 or if XMSNIND = 3 and the alternate payload hover is not critical)

XMSN SIZED AT _____ PERCENT OF TAIL ROTOR HOVER POWER REQUIRED AT ALTERNATE
PAYLOAD = _____ LBS., ALTERNATE GROSS WEIGHT = _____LBS.
H = _____ FT., TEMP. = _____ DEG.F.
(printed if XMSNIND = 3 and the alternate payload hover is critical)

XMSN SIZED AT _____ PERCENT OF TAIL ROTOR CRUISE POWER REQUIRED AT V_C = _____ KT.
H = _____ FT., TEMP. = _____ DEG.F.
(printed if XMSNIND = 2 or if XMSNIND = 3 and the alternate payload hover is not critical)

Which is followed by:

AUXILIARY PROPULSION DRIVE SYSTEM RATING _____H.P.
(printed if AUXIND = 3 or 4 and AIPIND = 1)

Depending on the transmission sizing option chosen (XMSNIND) and the results of the sizing one of the following three statements will be printed:

XMSN SIZED AT _____ PERCENT OF TOTAL CONFIGURATION POWER REQUIRED TO HOVER
AT H = _____ FT., TEMP. = _____ DEG.F.
(printed if ESCIND = 1.0 and XMSNIND = 2 or 3)

XMSN SIZED AT _____ PERCENT OF TOTAL PRIMARY ENGINE INSTALLED POWER
MAX. STANDARD S.L. STATIC H.P.
(printed if XMSNIND = 1.0)

XMSN SIZED AT _____ PERCENT OF AUX. PROPULSION CRUISE POWER REQUIRED AT V_C = _____KT.
H_C = _____ FT., TEMP., = _____ DEG.F.
(printed if ESCIND = 2.0 and XMSNIND = 2 or 3)

AUXILIARY INDEPENDENT PROPULSION DRIVE SYSTEM RATING
(printed if AUXIND = 3 or 4, AIPIND = 2 ENGIND = 0)

Depending on the transmission sizing option chosen (XMSNIND) and the results of the sizing one of the following four statements will be printed:

XMSN SIZED AT _____ PERCENT OF TOTAL AUXILIARY INDEPENDENT ENGINE INSTALLED POWER MAX. STANDARD S.L. STATIC H.P.
(printed if AIPIND = 2, ENGIND = 0, and XMSNIND = 1.0)

XMSN SIZED AT _____ PERCENT OF MAX. AUXILIARY INDEPENDENT ENGINE POWER AVAILABLE AT H = _____ FT., TEMP. = _____ DEG.F.
(printed if AIPIND = 2, ENGIND = 0, ESCIND = 1 and XMSNIND = 2 or 3)

XMSN SIZED AT _____ PERCENT OF MAX. AUXILIARY INDEPENDENT ENGINE POWER AVAILABLE IN CRUISE AT V_C = _____ KT., H_C = _____ FT., TEMP. = _____ DEG.F.
(printed if AIPIND = 2, ENGIND = 0, XMSNIND = 2 or 3 and FIXIND = 0.0)

XMSN SIZED AT _____ PERCENT OF AUXILIARY PROPULSION CRUISE POWER REQUIRED AT V_C = _____ KT. H_C = _____ FT., TEMP. = _____ DEG.F.
(printed if AIPIND = 2, ENGIND = 0, XMSNIND = 2 or 3 and FIXIND = 1.0)

6.1.3.5 Aerodynamics Data

Single and Tandem Rotor Helicopter

TOTAL EFFECTIVE FLAT PLATE AREA
TOTAL WETTED AREA
MEAN SKIN FRICTION COEFF.

DRAG BREAKDOWN

WING FE
FUSELAGE FE
FORWARD (MAIN) ROTOR PYLON FE
AFT ROTOR PYLON FE
MAIN ROTOR HUB(s) FE
TAIL ROTOR HUB FE
VERTICAL TAIL FE
HORIZONTAL TAIL FE
PRIMARY ENGINE NACELLE FE
AUXILIARY INDEPENDENT CRUISE ENGINE NACELLE FE
AUXILIARY INDEPENDENT CRUISE ENGINE NACELLE STRUT FE
INCREMENTAL FE

AERODYNAMIC COEFFICIENTS

A5
A6
A7
A8
A9
WING LIFT EFFICIENCY FACTOR
VERTICAL TAIL LIFT EFFICIENCY

6.1.4 Mission Performance Data

Two types of output are possible. If the OPTIONAL PRINT INDICATOR = 0, a standard printout will occur. If the indicator is input as 1, a detailed printout will occur. This will include all data printed in the standard printout plus additional information.

6.1.4.1 Standard Printout

The mission performance data is printed out by segment in chronological sequence. Up to 15 columns of data are printed out depending upon the segment. For all segments, the following information is printed:

t: time in hours

R: range in nautical miles

W_f: weight of fuel used in pounds

W: aircraft weight in pounds

h: altitude in feet

TAS: the true airspeed in knots

Primary Turb. Temp: the primary engine turbine temperature

PRIMARY ENGINE CODE: a code letter which designates the condition governing the engine performance:

P = power (or thrust) required

T = turbine temperature (engine rating)

W = fuel flow limit

N1 = gas generator shaft rmp limit

C = compressor (N_I/θ_1) limit

N2 = output shaft rmp limit

Q = torque limit

PRIMARY ENG. PEHF: The primary engine horsepower fraction. This is the ratio of power being used at any altitude, Mach number condition to the maximum power available at that condition.

In addition, the following data is printed out in different segments:

AUX. TURB. TEMP: The auxiliary independent engine turbine temperature.

AUX. ENG. CODE: A code letter which designates the condition governing the auxiliary independent engine performance: (code is same as for primary engines).

AUX. ENG. PEHF: The auxiliary independent engine thrust or horsepower fraction. This is the ratio of thrust or power being used at any altitude, Mach number condition to the maximum thrust, or power available at that condition.

AUX. ENG. FUEL FLOW: Auxiliary independent engine time rate of fuel consumption in pounds per hour.

TOTAL FUEL FLOW: Total time rate of fuel consumption (primary plus auxiliary independent engines) in pounds per hour.

T/W: The thrust-to-weight ratio (printed out in takeoff, hover, and landing).

FM: Main rotor overall hover figure of merit (for a tandem rotor configuration, this includes rotor/rotor interference) (printed out in takeoff, hover and landing).

BHP: Total power required (printed out in takeoff, hover, and landing, climb, cruise, descent, and loiter).

CT:	Main rotor thrust coefficient (printed out in takeoff, hover, and landing, climb, cruise, descent, and loiter).
CT/SIGMA:	CT/main rotor solidity (printed out in takeoff, hover, and landing).
EAS:	The equivalent airspeed in knots (printed out in climb, cruise, descent, and loiter).
MU:	Main rotor advance ratio (printed out in climb, cruise, descent, and loiter).
CT PRIME/SIGMA:	Main rotor cruise lift coefficient/main rotor solidity (printed out in climb, cruise, descent, and loiter).
ALPHA D/L:	Angle of total rotor thrust (lift plus propulsive force) vector with respect to a line perpendicular to the A/C flight path (printed out in climb, cruise, descent and loiter).
NMPP:	The specific range in nautical miles per pound (printed out in cruise).
GAMMA:	The flight path angle in degrees (printed out in climb and descent).
R/C:	Rate of climb in feet per minute (printed out in climb).
R/S:	Rate of descent in feet per minute (printed out in descent).

6.1.4.2 Detailed Printout

In addition to the data printed above, the following data (unless noted otherwise) will be printed in takeoff, hover, and landing, climb, cruise, descent, and loiter segments if the OPTIONAL PRINT INDICATOR = 1:

VRC RHP:	Vertical rate of climb rotor horsepower (printed out only in takeoff, hover and landing).
FMI:	Isolated main rotor hover figure of merit (printed out only in takeoff, hover, and landing).

TOTAL FUEL FLOW:	Total fuel consumption (primary + auxiliary independent engines) - lb/hr (printed out only in loiter).
M. ROTOR VTIP:	Main rotor tip speed - feet per second
M. ROTOR RHP:	Main rotor horsepower (no losses)
T. ROTOR VTIP:	Tail rotor tip speed - feet per second
T. ROTOR RHP:	Tail rotor horsepower (no losses)
PRIM. ENG. FUEL FLOW:	Primary engine fuel consumption - lb/hr
AUX. ENG. FUEL FLOW:	Auxiliary independent engine fuel consumption - lb/hr
ROTLIM CODE:	A code letter which designates whether main rotor has exceeded the rotor limits input to the program.
	A = Within input rotor limits
	E = Rotor limits exceeded
DELCDM:	Compressibility drag coefficient increment to rotor profile power. In hover, it is a function of rotor C_T/σ and V_{TIP}. In cruise it is a function of rotor C_T/σ and advancing blade tip Mach number (only printed out when a rotor "cycle" is input).
CPPRO:	Rotor profile power coefficient (only printed out when a rotor "cycle" is input).
CPIND:	Rotor induced power coefficient (only printed out when a rotor "cycle" is input).
CDO:	Rotor profile drag (total) coefficient (only printed out when a rotor "cycle" is input).
PROP VTIP:	Propeller tip speed - ft/sec.
BHP AUX:	Auxiliary propulsion power required (not printed out in takeoff, hover, and landing).
ETAP PROP:	Propeller cruise efficiency

TAUX/T: Ratio of auxiliary propulsion thrust to total configuration thrust required.

AUX. ENG. FUEL FLOW:
AUX. TURB. TEMP:
AUX. ENG. CODE:
AUX. ENG. PEHF:
} Same as noted earlier

AUX. ENG. BHP OR THRUST: Auxiliary independent engine power (if ENGIND = 0, horsepower required printed out. If ENGIND = 1, thrust required printed out).

CPPAR: Rotor parasite power coefficient (only printed out when a rotor "cycle" is input).

CPNUD: Rotor nonuniform downwash power coefficient (only printed out when a rotor "cycle" is input).

DELCDS: Retreating blade stall coefficient increment to rotor profile power (only printed out when a rotor "cycle" is input).

CXR: Rotor propulsive force coefficient

J Propeller advance ratio

CP Propeller power coefficient

CT Propeller thrust coefficient

CLW Wing lift coefficient

CDW Wing profile drag coefficient

RN Fraction of total lift carried by rotor

6.1.4.3 Headings

At the beginning of each segment, a printout will identify the segment data which follows. The following messages can be printed:

a. TAXI FOR ____ HRS. AT GROUND IDLE ENGINE RATING

b. TAKEOFF, HOVER, OR LAND AT T/W = _____ FOR _____ HRS.

or: TAKEOFF, HOVER, OR LAND AT PEHF = ____, FOR ____ HRS.

c. CLIMB TO ____ FT. WITH MAX R/C AT ____ ENGINE RATING

CLIMB TO ____ FT. WITH CONSTANT EAS AT ____ ENGINE RATING

CLIMB TO ____ FT. WITH CONST. MACH NO. AT ____ ENGINE RATING

CLIMB TO ____ FT. WITH CONSTANT TAS AT ____ ENGINE RATING

CLIMB TO OPT. ALT. FOR NEXT CRUISE WITH MAX. R/C AT ____ ENGINE RATING, MAXIMUM ALT. ____ FT.

CLIMB TO OPT. ALT. FOR NEXT CRUISE WITH CONSTANT EAS AT ____ ENGINE RATING, MAXIMUM ALT. ____ FT.

CLIMB TO OPT. ALT. FOR NEXT CRUISE WITH CONST. MACH NO. AT __ _ ENGINE RATING, MAXIMUM ALT. ____ FT.

CLIMB TO OPT. ALT. FOR NEXT CRUISE WITH CONSTANT TAS AT ____ ENGINE RATING, MAXIMUM ALT. ____ FT.

d. CRUISE AT ____ ENGINE RATING

CRUISE AT ____ KNOTS TAS LIMITED BY ____ ENGINE RATING

CRUISE AT BEST RANGE SPEED WITH HEADWIND OF ____ KNOTS

CRUISE AT SPEED FOR 99 PERCENT BEST RANGE WITH HEADWIND OF ____ KNOTS

CRUISE AT BEST RANGE SPEED WITH HEADWIND OF ____ KNOTS, CONSTANT W/DELTA = ____

e. DESCEND TO H = ____ FT AT CONSTANT EAS

DESCEND TO H = ____ FT AT CONSTANT TAS

DESCEND TO H = ____ FT AT CONSTANT TAS (SPIRAL DESCENT PATH)

DESCEND TO H = ____ FT AT CONSTANT EAS (SPIRAL DESCENT PATH)

DESCEND TO H ____ FT AT CONSTANT MACH NO.

DESCEND TO H = ____ FT AT CONSTANT MACH NO. (SPIRAL DESCENT PATH)

DESCEND TO H = ____ FT., R = ___ NM AT CONSTANT EAS

DESCEND TO H = ____ FT., R = ____ NM AT CONSTANT MACH NO.

DESCEND TO H = ____ FT., R = ____ NM AT CONSTANT TAS

f. LOITER FOR ___ HRS.

g. CHANGE FUEL, ADD ____ LB

CHANGE FUEL, REMOVE ____ LB

h. CHANGE PAYLOAD, ADD ____ LB

CHANGE PAYLOAD, REMOVE ____ LB

i. TRANSFER ALTITUDE TO ____ FT

After the complete mission history has been printed, the following fuel summary will be printed:

MISSION FUEL REQUIRED =

RESERVE FUEL REQUIRED =

TOTAL FUEL REQUIRED =

NOTE: If segments 1 through 6 are used for reserve fuel calculations, headings a. through f. will be followed by the statement FOR RESERVE FUEL.

6.2 LIST OF DIAGNOSTIC ERROR PRINTOUTS

6.2.1 Errors Affecting Main Control Loop

6.2.1.1 *** ERROR THE USER REQUESTED PRIMARY ENGINE CYCLE NO. XXX BUT THE INPUT DECK WAS SET UP TO USE NO. YYY

The operator used an engine cycle whose identification number differed from that requested by the user (LOC 0217)

REMEDY: Use correct engine cycle

6.2.1.2 *** ERROR THE USER REQUESTED ROTOR MAP NO. XXX BUT THE INPUT DECK WAS SET UP TO USE NO. YYY

The operator used a rotor map whose identification number differed from that requested by the user (LOC. 0170)

REMEDY: Use correct rotor map

6.2.1.3 *** ERROR THE USER REQUESTED ROTOR CYCLE NO. XXX BUT THE INPUT DECK WAS SET UP TO USE NO. YYY

The operator used a rotor cycle whose identification number differed from that requested by the user (LOC. 0171)

REMEDY: Use correct rotor cycle

6.2.1.4 *** ERROR THE USER REQUESTED AUXILIARY ENGINE NO. XXX BUT THE INPUT DECK WAS SET UP TO USE NO. YYY

The operator used a auxiliary engine whose identification number differed from that requested by the user (LOC. 0242)

REMEDY: Use correct auxiliary engine

6.2.1.5 *** ERROR THE USER REQUESTED PROP TABLE NO. XXX BUT THE INPUT DECK WAS SET UP TO USE NO. YYY

The operator used a propeller table whose identification number differed from that requested by the user (LOC. 0260)

REMEDY: Use correct propeller table

6.2.1.6 ERROR *** THE FIRST SEGMENT INDICATOR OF A MISSION CANNOT BE 0., 100., or 5. (RMAXND = 0) SEE USERS MANUAL

PRECEDING PAGE NOT FILMED BLANK

REMEDY: Check all tail rotor sizing input data ($(T/A)_{NET}$, b_{TR}, θ_{TTR}, X_{CTR}, etc.)

6.2.1.16 AFTER 20 ITERATIONS, X_M/ℓ_B DOES NOT CONVERGE

This message will be printed if X_M/ℓ_B calculated by the main rotor position sizing option (MRPIND = 1 or 2) does not converge.

REMEDY: Check all input values required for this option (LOC 2678 - LOC 2696)

6.2.1.17 GAMMA FAILED TO CONVERGE IN 20 ITERATIONS - SUBROUTINE THRUST

This message will be printed if the propeller thrust calculation routine cannot converge on a thrust and efficiency that will match the required thrust. Such an error is unlikely and would occur only in cases involving extreme thrust requirements.

REMEDY: Review input data that specifies propeller requirements.

6.2.2 Errors Related to Tabulated Inputs

6.2.2.1 Two Dimensional Tables

*** ERROR***THE FOLLOWING VALUES MAY NOT BE ACCURATE. THE INDEPENDENT VARIABLE WAS OUT OF RANGE OF THE TABLE. THESE VALUES WERE CALCULATED USING THE YYYYY VALUE GIVEN IN THE TABLE. THIS ERROR IS IN THE XXXXX TABLE.

This message occurs whenever the computer is required to look up a value in a table of input quantities at a calculated value of the independent variable which lies outside the range of the input values of the independent variable.

If the calculated independent variable is below the lowest value of the input table, the computer uses the first value in the table and YYYYY in the message reads FIRST. If it lies above the highest value, the last value in the table is used and YYYYY becomes LAST.

XXXXX in the last line of this message identifies the table in which the error occurs. The tables in which this could occur are shown below. The third column indicates the part of the message which is shown above as XXXXX.

PRECEDING PAGE NOT FILMED BLANK

INDEPENDENT VARIABLE	DEPENDENT VARIABLE	XXXXX
M	η_{p4}	M, ETAP4
C_L	$C_{D_{Wi}}$	CL, CDWI
h	θ	H-THETA
C_T	K_{HOV_A}	CT, KHOVA TABLE (SUBR. ROTPOW)†
EPSILON	K_{INTO}	EPSILON-KINTO TABLE (SUBR. ROTPOW)††
μ	K_{NUD}	MU-KNUD TABLE (SUBR. ROTPOW)††
C_T	$K_{HOV_{A_{TR}}}$	CT, KHOVATR TABLE (SUBR. ROTPOW)††
(O/L)/D	K_{2W}	SIZTR SUBR.
N_{II}/N_{IIOPT}	K_{PN}	NSUB2 CORRECTION FACTOR
$(N_I/N_I^*)(D/\nu_1)$	K_{PR}	REYNOLDS NUMBER
Q/Q^*	T/θ	TORQUE LIMIT LOOK UP
$(SHP/\delta\sqrt{\theta SHP^*})_{REQ}$	T/θ	POWER REQUIRED LOOK UP
C_L	γ	PROPELLER EQUIVALENT LIFT DRAG POLAR†
C_{Ti}	C_P	CTI- CP

† Strictly speaking, this table is not an input. The table is calculated in the main control loop using BLOCK DATA and the input value of INTEGRATED LIFT COEFFICIENT (LOC. 0259). The error message indicates that the value of C_L used was above the maximum value in the table. This will occur only if an unusual combination of high power coefficient and low propeller activity factor exists. In such a case the user should change the propeller input parameters to obtain a propeller that more closely matches the performance requirements.

††This table is not input. It is stored as BLOCK DATA

6.2.2.2 Three Dimensional Tables

*****ERROR*** THE FOLLOWING VALUES MAY NOT BE ACCURATE. THE AAA INDEPENDENT VARIABLE IS OUT OF RANGE OF THE TABLE. THE PROGRAM USED THE BBB VALUE IN TABLE TO CALCULATE. THIS ERROR IS IN THE XXXX PART OF THE YYYYY TABLE.**

This message is printed whenever one of the calculated independent variables lies outside the range of the independent variables defining the table input by the user.

The XXXX and YYYYY parts of the message respectively name the independent variable and the table in which the error occurred. AAA stands for FIRST or SECOND, BBB stands for First or LAST.

The tables in which this error could arise are shown below. The items in parentheses show the variables as they appear in the error message.

DEPENDENT VARIABLE	INDEPENDENT VARIABLES (XXXX)	NAME OF TABLE (YYYYY)
ΔC_{DM}	C_L(CL), M	COMPRESSIBILITY DRAG
$F_N/\delta\ F_N^*$	T/θ (T), M	REFERRED THRUST
$SHP/\delta\sqrt{\theta}SHP^*$	T/θ (T), M	REFERRED POWER
$\dot{W}/\delta\sqrt{\theta}SHP^*$ or $\dot{W}/\delta\sqrt{\theta}F_N^*$	T/θ (T), M	REFERRED FUEL FLOW
$N_I/\sqrt{\theta}N_I^*$	T/θ (T), M	REFERRED NSUB1
$N_{II}/\sqrt{\theta}N_{II}^*$	T/θ (T), M	REFERRED NSUB2
C_T	C_P(CP), M	PROPELLER POWER COEFFICIENT
C_T'/σ	μ, C_X/σ	CT'/SIGMA TABLE (SUBR. ROTLIM)

DEPENDENT VARIABLE	INDEPENDENT VARIABLES (XXXX)	NAME OF TABLE (YYYYY)
$\Delta K_{HOV_{\theta_T}}$	C_T, $\theta_{T_{MR}}$ or C_T, $\theta_{T_{TR}}$ of C_T, $\theta_{T_{REF}}$	DELTA KHOVER - THETA T TABLE (SUBR ROTPOW)†
σ_{IF}	S, Z_W	PRANDTL DRAG INTERFERENCE TABLE (AERO SUBR)†
C_P/σ	μ, C_T'/σ, C_X/σ	CTP/SIGMA ROTOR MAP (Type I Rotor map)
CP_H/σ	C_T, M_{TIP}	HOVER PORTION OF THE ROTOR MAP (Type I Rotor map)
F.M.	C_T, M_{TIP}	HOVER PORTION OF THE FM ROTOR MAP (Type II Rotor map)
L/D_E	μ, C_T'/σ, X/L	L/D_E ROTOR MAP (Type II Rotor map)

REMEDY: Rewrite the input table so that the independent variable that was previously out of range will fall into the range of the new table.

†This table is not input. It is stored as BLOCK DATA.

6.2.3 Errors Occuring in Performance Calculations

6.2.3.1 **WARNING: ROTOR LIMIT HAS BEEN EXCEEDED. FORWARD FLIGHT SPEED HAS BEEN REDUCED ACCORDINGLY. CHECK ALL VALUES OF TAS, MU, CT'/SIGMA AND CXR IN THIS PERFORMANCE LEG.**

This message will be printed in segments climb, cruise, descent and loiter if a rotor limit has been exceeded.

REMEDY: Check rotor limits tabular input values (LOC 0347 - 0395) and segment input values.

6.2.3.2 WARNING: ROTOR LIMIT HAS BEEN EXCEEDED. EITHER REDUCE MAIN ROTOR THRUST REQUIREMENTS AT THESE OPERATING CONDITIONS OR INCREASE MAIN ROTOR TIP SPEED, CHECK ALL VALUES OF CT/SIGMA IN THIS PERFORMANCE LEG.

This message will be printed in the takeoff hover, and landing segment if a rotor limit has been exceeded.

REMEDY: Check rotor limits tabular input values (LOC -347 - 0395) and segment input values.

6.2.3.3 CAUTION: TAIL ROTOR ANTI-TORQUE THRUST REQUIRED AT THIS OPERATING CONDITION IS NEGATIVE. CHECK ALL VALUES OF CLFIN.

This message is printed in forward flight (climb, cruise, descent, and loiter segments) when single rotor helicopter vertical tail fin lift exceeds the total anti-torque thrust required at a given operating condition (resulting in a negative anti-torque thrust required for this tail rotor). This condition can be the result of:

a) too much vertical tail fin area
b) tail fin operating at too large a fin C_L

REMEDY: Check size requirements for vertical tail and input value for fin operating C_L (LOC 0216)

6.2.3.4 CAUTION: TAIL ROTOR CT EXCEEDS .030. TAIL ROTOR TIP SPEED RESET - CHECK ALL VALUES IN PERFORMANCE LEG.

This message is printed when the tail rotor C_T exceeds .03. This condition can be the result of

a) too small a tail rotor diameter
b) operating the tail rotor at too low a tip speed

REMEDY: Check the sizing requirements for the tail rotor diameter, or increase the tail rotor tip speed.

6.2.3.5 INSUFFICIENT POWER AVAILABLE TO HOVER. (T/W) AVAILABLE LESS THAN (T/W) REQUIRED AT DESIGN DOWNLOAD.

This message will be printed out during the takeoff, hover and landing segment if the value of T/W calculated from the input PEHF (TOLIND = 2 or 4) is less than that required to provide sufficient thrust to overcome hover download (based on the design $(T/W)_D$ LOC 0228). NOTE: $(T/W)_D$ is always input.

REMEDY: Increase the input value of PEHF

6.2.3.6 CAUTION ** PEHF IS GREATER THAN 1

This message indicates a condition for which greater than 100 percent of maximum power or thrust was required during takeoff, hover or landing.

REMEDY: Increase engine power available or decrease required thrust-weight for hover

6.2.3.7 WARNING: THIS CASE HAS BEEN TERMINATED BECAUSE OF INSUFFICIENT POWER AVAILABLE FOR CLIMB AT THIS FLIGHT CONDITION. CHECK ALL INPUTS

This message is printed if the engine thrust or power input by the user is insufficient to allow the aircraft to climb.

REMEDY: a) Increase the engine power or thrust, whichever is appropriate, or

b) Inspect the inputs which determine drag and adjust them if they appear to give a grossly over-rated value of drag.

6.2.3.8 WARNING: THIS CASE HAS BEEN TERMINATED BECAUSE THE CLIMB ANGLE IS TOO LARGE DUE TO EXCESSIVE POWER AVAILABLE AT THIS FLIGHT CONDITION. CHECK ALL INPUTS

This message is printed if the engine thrust or power input by the user is excessive (resulting in climb angles greater than 45°) for the flight condition desired.

REMEDY: a) Decrease the engine power or thrust or

b) Increase the value of the drag input to this segment

6.2.3.9 INSUFFICIENT POWER AVAILABLE FOR CRUISE AT INPUT TAUXTT

This message will be printed during cruise, if in the case of a compound or auxiliary propulsion helicopter, the input value of T_{AUX}/T_{TOT} does not permit a power or thrust available-required match at a given cruise speed.

REMEDY: Check T_{AUX}/T_{TOT} inputs in the cruise segment.

6.2.3.10 ERROR ***** INSUFFICIENT POWER AVAILABLE FOR CRUISE AT DESIRED SPEED

This message will be printed during cruise if CRSIND = 2 (cruise at specified true airspeed) and insufficient power is available to maintain steady level flight at the desired speed. The remaining cruise calculations will be at constant power setting.

REMEDY: Increase engine power, decrease drag level, or decrease required cruise speed.

6.2.3.11 CAUTION SPEED LIMITED BY POWER/THRUST AVAILABLE AT SPECIFIED POWER SETTING

This message will be printed when power or thrust available is insufficient to allow the aircraft to cruise at speed for 99% best range as specified by selecting CRSIND = 4. or 6. (LOC 0721 through 0730)

6.2.3.12 INSUFFICIENT POWER FOR STEADY LEVEL FLIGHT

This message appears during the loiter segment calculations.

REMEDY: Check power available and drag level.

6.2.3.13 CLQS IS TOO LARGE FOR DESCENT AT REQUIRED SPEED

This message is printed out when, in the case of a winged helicopter, the wing contribution to the total aircraft lift is too high to permit this aircraft to descend.

REMEDY: Reduce wing operating C_L

6.2.3.14 INSUFFICIENT POWER TO DESCEND AT THE REQUIRED SPEED

This message is printed out when the aircraft has insufficient power to descend at the required speed.

REMEDY: Reduce value of drag input in this segment.

6.2.3.15 TERMINAL RANGE EXCEEDED, SPIRAL DESCENT REQUIRED

This message is printed when the predicted flight path ends beyond the specified terminal range (RMAXND = 1).

REMEDY: Reevaluate terminal range requirement or increase value of drag input in this segment.

6.2.3.16 TERMINAL RANGE NOT ATTAINED, USE MORE CRUISE OR A SHALLOWER DESCENT

This message is printed out when the predicted flight path ends before the specified terminal range (RMAXND = 1).

REMEDY: Reevaluate the terminal range requirement or reduce the drag input to this segment.

6.2.3.17 **ERROR*** THE RANGE NECESSARY TO DESCEND IS GREATER THAN THE RANGE OF THE TABLE CALCULATED IN CRUISE. THIS MAY BE DUE TO A DELTA R IN CRUISE WHICH IS TOO SMALL.

The computer saves the last ten points of the cruise from R_{max} backward so that an iteration can be carried out to find the correct point to start the descent when RMAXND = 0. This error message is printed if the stored values do not cover a sufficient range back from R_{max}. Either ΔR is too small or the angle of descent is very small.

REMEDY: Check ΔR (LOC. 0771 through 0780).

7.0 PROGRAM USAGE

7.1 COMMENTS ON PROGRAM USAGE

Following are a list of rules and suggestions for using the program:

7.1.1 Rules

1. Do not use descent option RMAXND = 0 unless preceded by a cruise.

2. Do not input a turbofan or turbojet engine cycle for the primary engines.

3. $(T/W)_D$ (LOC 0228) must always be input. This is the basic configuration design thrust-to-weight ratio. It is used to establish the basic configurations download for calculation of both hover and low forward speed performance.

4. If FIXIND = 0 and FIXINDI = 1.0, locations 0234 → 0241 must be input to allow sizing of the auxiliary independent engines.

5. If FIXIND = 1 and ESCIND = 1 only fixed size auxiliary independent engines (FIXINDI = 0.0) may be input.

6. If OPTIND = 2, the helicopter parasite drag should be input as two terms. The wing (if there is one) profile drag coefficient is input to the table of C_{DWi} versus C_L, and all other component contributions are input by means of the term ΔF_e (LOC 0316). The terms $C_{D_{AP}}$, $C_{D_{FP}}$, $C_{D_{CSMR}}$, $C_{D_{SHMR}}$, $C_{D_{CSTR}}$, $C_{D_{SHTR}}$, C_{D_N}, $C_{D_{NI}}$, $C_{D_{NS}}$, $C_{D_{VT}}$, and $C_{D_{HT}}$. K_{HPIM}, K_{HPIT}, K_N, K_{NI}, K_{NS}, K_F, K_{VT}, and K_{HT} are not used in OPTIND = 2. If the option indicator is 1, all terms and factors may be used.

7. If cruise is followed by descent with RMAXND = 0, the cruise step size (LOC. 0771 - 0780) should not be less than 10 to 15 nautical miles. This is necessitated by the fact that a table of cruise conditions is compiled during cruise to use in the determination of the starting point for descent. This table consists of 10 points. The cruise step size therefore must be sufficiently large to ensure that the total of nine steps in range is greater than the range required for the following descent. A cruise step size which is too small will lead to termination of the case with the printout:

*** ERROR *** THE RANGE NECESSARY TO DESCEND IS GREATER THAN THE RANGE OF THE TABLE CALCULATED IN CRUISE. THIS MAY BE DUE TO A DELTA R IN CRUISE WHICH IS TOO SMALL.

8. At present do not use SGTIND = 7 with OPTIND = 1 unless a sufficiently large ΔW_f is input to completely refuel the aircraft. This rule will be eliminated by future modifications to the program. For the present, missions employing change of fuel can be analyzed by running separate cases, a new case each time the fuel is changed. The aircraft can be separately sized for each case and compared manually.

9. The value for payload which is input (LOC. 2604) should be the payload at initial takeoff.

7.1.2 Suggestions

1. Input locations 0005 → 0022 are arranged in a sequential order (1st and 2nd order size trend and propulsion indicators) which allows configuration types to be input in a logical "building block" manner. Use of this arrangement facilitates the input of data. For example if the user wishes to input a single rotor auxiliary independent engine compound helicopter, the following input sequence follows:

   a) Input CNFIND = 1 (single rotor helicopter)

   b) Input AUXIND = 4 (compound helicopter)

   c) Since a compound helicopter has wings, input desired wing sizing options (S_wIND and b_wIND).

   d) Input AIPIND = 2 (auxiliary independent engines)

   e) Input desired type of auxiliary independent engine (ENGIND)

   f) Input those options pertaining only to single rotor helicopters (TRDIND, TRSIND, VTFIND, HTIND, and MRPIND)

2. If nonstandard atmosphere is required only for constant altitude segments, such as loiter, cruise, and takeoff, the table of temperature ratio versus altitude need not be filled in. The nonstandard atmosphere may be obtained by use of ATMIND = 1.

3. If it is desired to run OPTIND = 2 for a helicopter which has previously been sized in a separate case, the drag

will be represented correctly if the output values of a_5 and a_6 from the sizing case are input for the OPTIND = 2 case to ΔF_e (LOC 0316) and K_W (LOC 0327) respectively, and if the C_{DWi} table is filled in identically to the sizing case.

4. To represent engines which are buried in the fuselage, input K_N (LOC 0323) or K_{NI} (LOC 0324), or both as zero and Z_1, Z_2, Z_3 (LOCS 0142, 0143, and 0144) or Z_4, Z_5, Z_6 (LOCS 0146, 0147, 0148) or both as zero. The component drag will then be zero and the calculation of engine/nacelle dimensions will be bypassed.

5. The order in which segments 7 and 8 are used is important due to the fact that the program will not permit the aircraft weight, during a change of weight segment, to exceed gross weight. As an example, to simulate adding 200 pounds of payload, followed by refueling back to gross weight limits, the eighth performance segment (change of payload weight) should be entered first with an input of ΔW_{PL} (LOC 1161 through 1170) of 200. Then, the change of fuel weight segment can be entered with a large number input for the ΔW_f quantity.

6. The weights factors K_1 through K_{20} (LOC 2654-2673) have a nominal value of 1.0 assigned to them by the program. These factors need not be input unless a nonunity value is desired. Similarly, the incremental group weights, ΔW_{FC} (LOC 2605), ΔW_P (LOC 2606), and ΔW_{ST} (LOC 2607), are nominally zero and need not be input unless a nonzero value is desired. The reserve fuel factors K_1 (LOC 0032) and δW_f (LOC 0033) are nominally unity and zero respectively. The fuel flow multiplier K_{FF} (LOC 0034) is nominally 1.0.

7. A cruise may be run with a headwind for cruise options 3 through 6 by input of the headwind in knots in locations 0731 through 0740. For cruise option 2 (specified constant true airspeed), the user can simulate cruise with a headwind by inputting an "equivalent" value for R_{max} (LOC 0791 - 0800), obtained by adjusting the true ground range desired by the ratio airspeed ÷ ground speed. The program output values for range must then be readjusted by the inverse of this ratio to obtain the correct ground range.

7.2 DISCUSSION OF ROTOR PERFORMANCE CALCULATIONS

As noted in section 4.5, four options for computing rotor performance are available to the program user. The first of these (ROTIND = 1) utilizes the "short form aero" rotor performance method which can be described as follows:

The short form aero rotor performance methodology is a combination of momentum theory and empirically derived factors . The four elements of the rotor power required are:

a) induced power (power required to generate lift)

b) profile power (power required to turn the rotor)

c) parasite power (power required to supply propulsive thrust in forward flight).

d) nonuniform downwash power (power correction due to nonuniform inflow and downwash effects in forward flight).

Figure 7-1 is a summary of the major equations used in this methodology. A brief description of their applications follows:

In hover, the rotor power required is composed of only two parts, induced and profile power. The induced power as represented by the equations in Figure 7-1 is a function of the variables K_{HOV}, K_{OL}, and C_T. K_{HOV} is the adjustment for nonuniform inflow and wake contraction effects and is a function of C_T, blade number, and blade twist. K_{OL} is the correction for overlapping rotors (as in the case of a tandem rotor helicopter).

The profile power is simply a function of the integrated blade drag coefficient (including compressibility effects) at a specified operating C_T/σ and blade solidity.

In cruise, the rotor power is composed of all four of the components listed initially. The induced power, as represented by the equations in Figure 7-1, is a function of the quantities K_{IND}, K_{INT}, C_T', and μ'. K_{IND} is the induced power adjustment factor which accounts for blade tip and other losses. K_{INT} is the induced power adjustment for interference between tandem rotors. Thus, for single rotor helicopters, K_{INT} is equal to 1. For tandem rotors, the value of K_{INT} is calculated based on tandem rotor overlap and an empirically derived wake separation angle, ε'. Profile power is simply a function of the integrated blade drag coefficient (corrected for retreating blade stall and advancing blade compressibility effects) at specified operating conditions (C_T'/σ, μ, C_X), blade solidity, and advance ratio (μ). The parasite power is a function of the propulsive thrust required and the efficiency of the rotor in converting power into that propulsive thrust (in addition to providing lift). The nonuniform downwash (NUD) power is a correction which has been empirically derived from a comparison of uniform and nonuniform downwash rotor analyses. The term K_{NUD}, which is a function of the advancing rotor, is stored as BLOCK DATA in this program.

MAIN ROTOR IN HOVER SUMMARY

$$RHP_{TOT} = \frac{\rho A V_T^3 C_{P_{TOT}}}{550}$$

where: $C_{P_{TOT}} = C_{P_{PRO}} + C_{P_{IND}}$

(PROFILE POWER) $C_{P_{PRO}} = C_{D_o} \frac{\sigma}{8} (1 - X_c)$

(INDUCED POWER) $C_{P_{IND}} = .707 K_{HOV} K_{OL} C_T^{3/2}$

$$C_T = \frac{\text{HOVER THRUST REQ'D}}{\rho A V_T^2}$$

$$A = \frac{\pi D^2}{4} N_{ROT}$$

$$X_c = 2r_{cutout}/D$$

MAIN ROTOR IN CRUISE FLIGHT SUMMARY

$$RHP_{TOT} = \frac{\rho A V_T^3 C_P}{550} \text{ TOT}$$

where: $C_{P_{TOT}} = C_{P_{PRO}} + C_{P_{IND}} + C_{P_{PAR}} + C_{P_{NUD}}$

(PROFILE POWER) $C_{P_{PRO}} = \frac{C_{D_o}\sigma}{8} (1 + 4.65\mu^2)(1 - X_c)$

(INDUCED POWER) $C_{P_{IND}} = \frac{K_{IND} K_{INT}}{2\mu'} C_T'^2$

(PARASITE POWER) $C_{P_{PAR}} = \mu C_X (K_{PER})$

(NUD POWER) $C_{P_{NUD}} = \frac{2K_{NUD} C_T' \sigma}{B^2 (1 + D.L. \sin^2\varepsilon)}$

$$C_T' = \frac{L_{ROT}}{\rho A V_T^2} (1 + D.l. \sin^2\varepsilon)$$

$$C_X = \frac{X_{TOT}}{\rho A V_T^2} \qquad A = \frac{\pi D^2}{4} N_{ROT}$$

$$\varepsilon = \tan^{-1} (2V / V \times 1.689)$$

$$K_{PER} = \frac{\mu_{PRI}}{\mu_{PRR}} = 1 + 12.8\mu^4$$

$$v_i = V_T \sqrt{[(\mu^4 + C_T^2)^{1/2} - \mu^2]/2}$$

$$\mu' = \frac{\sqrt{(1.689V)^2 + v_i^2}}{V_T} \qquad K_{NUD} = f(\mu)$$

Figure 7-1. Short Form Aero Rotor Performance Equations Summary.

In order to obtain a reasonable estimation of power required at very low advance ratios ($\mu < 0.1$) where neither normal cruise nor hover rotor characteristics totally describe the operating environment of the rotor, an empirical fairing technique is used. The method is based on the contracted induced wake angle ε:

$$\varepsilon = \tan^{-1}\left(2v_i/(1.689V)\right)$$

The relationship:

$$\sin^2\varepsilon + \cos^2\varepsilon = 1$$

is used to provide a smooth transition between hover and cruise characteristics for the affected coefficients while insuring that the resulting values will lie within the boundaries set by hover and cruise limiting conditions.

A detailed description of the equations used in this methodology is provided by inspection of Figure 4-14 (subroutine ROTPOW flow chart) and the input variable list included in paragraph 5.3.1 of Section 5.0. The empirical factors used in this methodology are input as noted earlier, in "rotor cycle" format. The input sheet used for this purpose is included in the specimen input sheets of Section 5.2. It should be noted that since the factors specified in a "rotor cycle" represent integrated blade characteristics, then a given "rotor cycle" implicity represents a given spanwise chord and airfoil distribution. Thus, it would ultimately be possible to build up an extensive library of "rotor cycles" with varying combinations of planform and airfoil distributions.

In the case of ROTIND = 2 (as noted in Section 4.5) input rotor maps (Type I), corrected by the program for the specific rotor and helicopter configuration characteristics under study, are employed. When ROTIND = 3, input rotor maps (Type I) with no corrections applied are utilized. When ROTIND = 4, Type II rotor maps, corrected in the same manner as in option two (ROTIND = 2), are used. A detailed description of the equations and variables used for ROTIND = 1,2,3,&4 is available by inspection of Figure 4-14 and paragraph 5.3.1. Figures 7-2 and 7-3 show the corrections (K_{DLD}, TIGE/TOGE) for hover in-ground effect applied to the equations:

$$T/W = 1 + D.L.\ (K_{DLD})$$

$$C_T = \frac{4W(T/W)}{\rho\pi D_{MR}^2 N_R V_{TIP}^2\ (TIGE/TOGE)}$$

used in calculating hover power.

$$DLD_{CORR.FACT} = 1.028 - 1.25e^{-(2h_{B_F}/DIA.)}$$ SINGLE ROTOR

$$DLD_{CORR.FACT} = 1.36771 - 1.57913e^{-h_{B_F}/DIA.}$$ TANDEM ROTOR

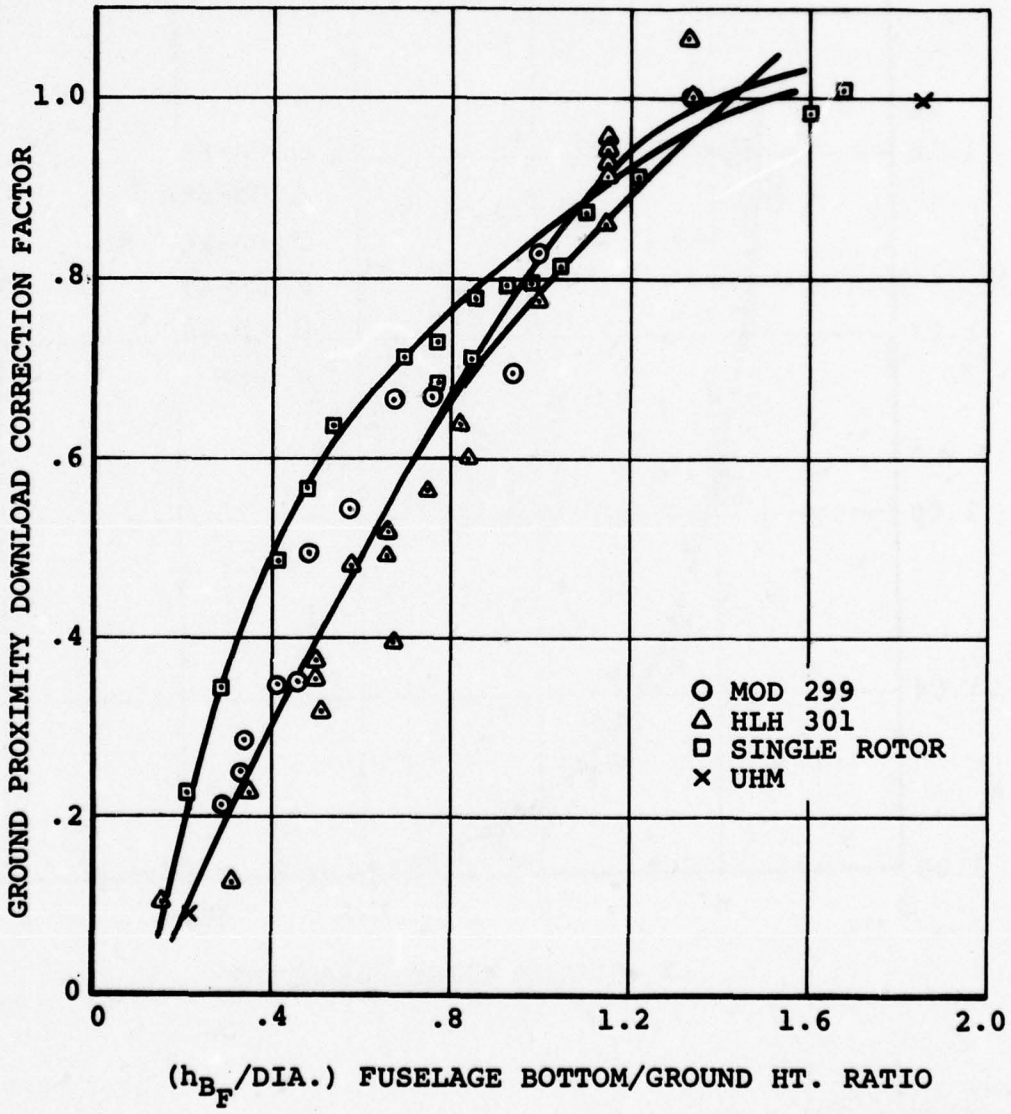

Figure 7-2. Download Sensitivity to Ground Proximity.

$$THRUST_{IGE}/THRUST_{OGE} = .06907(1/X) + .03364(X) + .90186$$

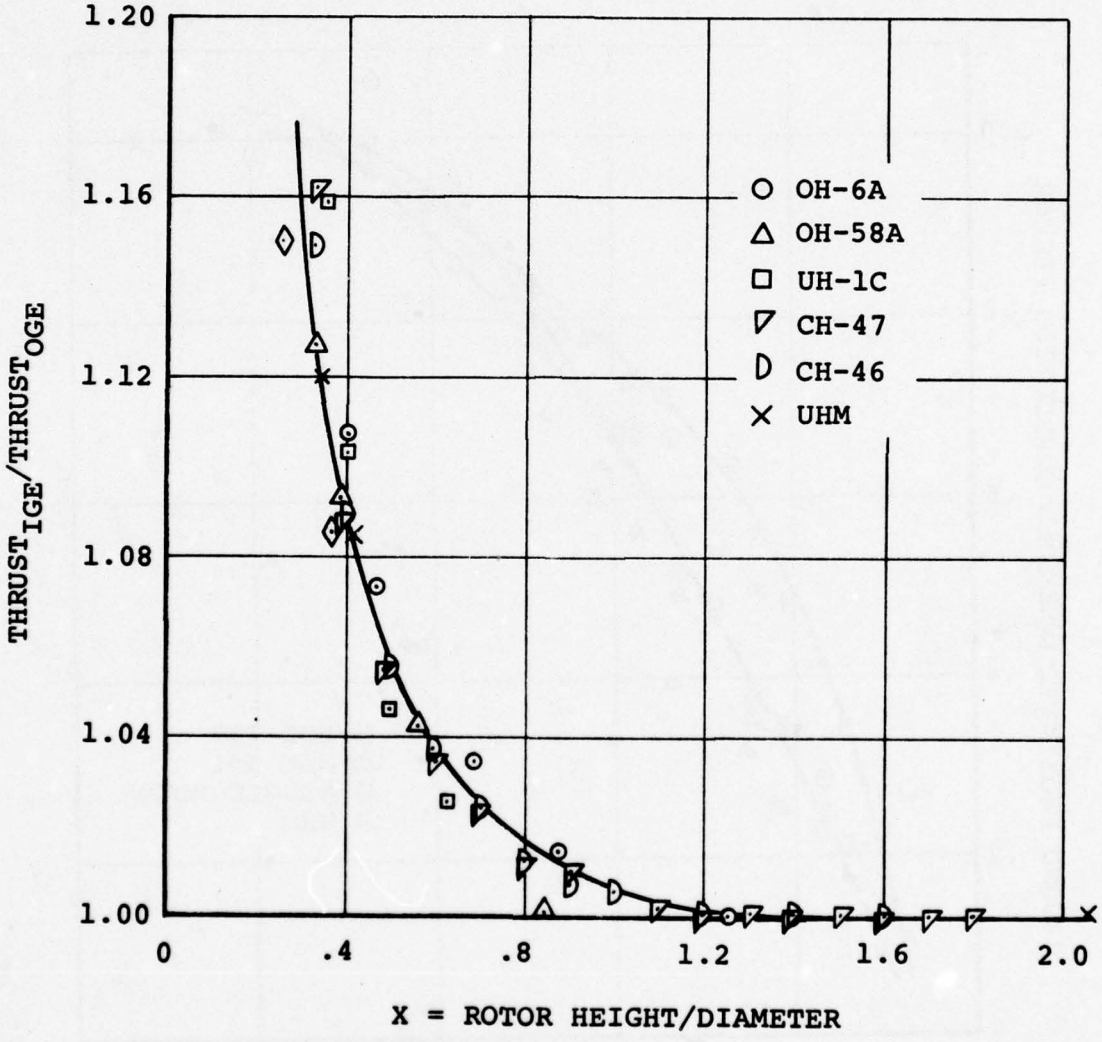

Figure 7-3. Thrust Augmentation in Ground Effect.

7.3 DISCUSSION OF ROTOR LIMITS

The function of the rotor limits table input described in Section 4.6 is to provide realistic (1g) level flight boundaries for helicopter rotor operation. This is important because, although the rotor performance calculation (whether using rotor "cycles" or maps) reflects operation near stall through rapidly increasing power required levels, it would still be possible, using a greatly oversized engine, to operate in this region, even though in actual fact the rotor could be overstressed or subject to structural failure. A typical rotor limits plot is illustrated by the sketch below:

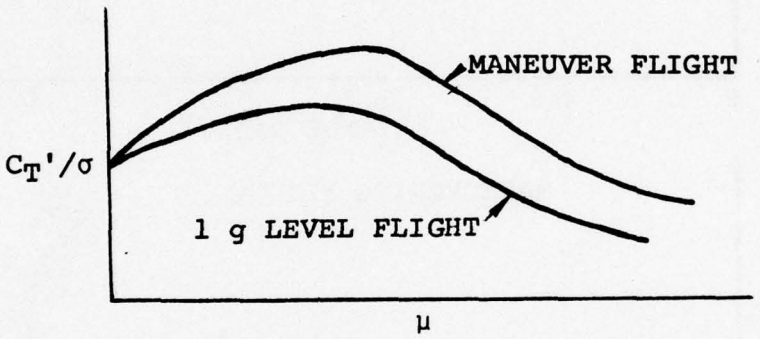

For purposes of defining the tabular rotor limits input, the level flight conditions are of interest only, although single point values $(C_T/\sigma)_H$, $(C_T/\sigma)_{CR}$ from the maneuver flight curve are necessary for determining (sizing) main rotor solidity. Rotor limits, then can be based on:

a) incipient rotor blade stall limits (1g level flight), or

b) incipient rotor blade stall and/or rotor blade structural limits for maneuver flight.

Figure 7-4 shows a summary of miscellaneous rotor limits data (theoretical and flight test), for both the 1g level flight and maneuver conditions. The rotor limit value $(C_T/\sigma)_H$ encountered in hover is typically due to stall flutter. This is primarily an aeroelastic/control system stiffness problem. Level flight rotor limit values, as noted earlier, are a function of incipient stall and/or stall flutter. Rotor limits in maneuver flight are more complex to understand because of the interaction of various rotor configurations and rotor parameters on the result. For example, a rotor system with

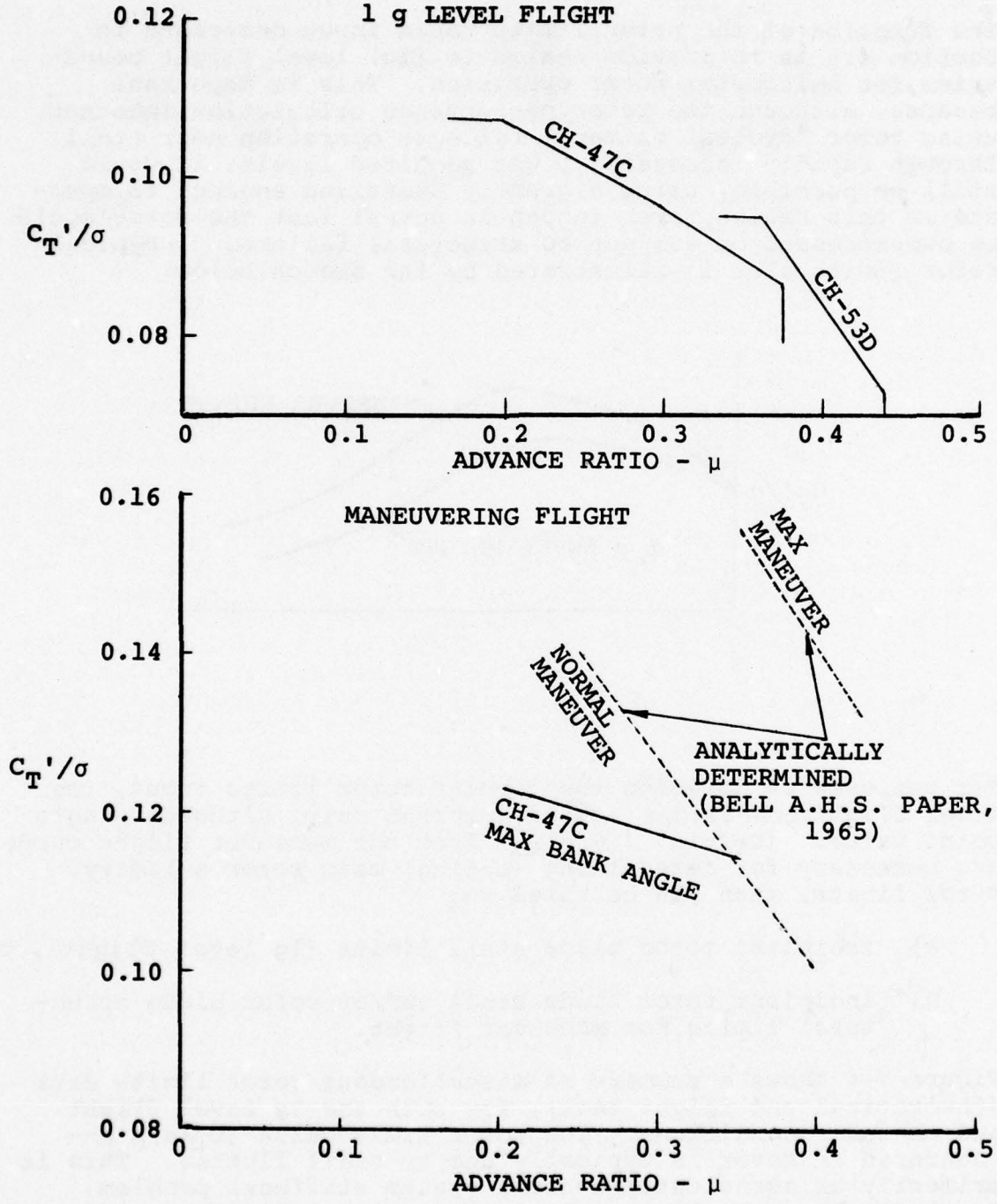

Figure 7-4. Summary of Typical Rotor Limits.

relatively high rotor blade inertia in the flapwise direction, should potentially (in a maneuver) exhibit a higher maneuver g capability (due to gyroscopic precessional effects) than a rotor with less inertia in the flapwise direction. Other factors influencing rotor limits include the torsional natural frequency of the blade as it interacts with stall flutter, chordwise bending stresses of the blade, the type of maneuver performed, etc. For a more detailed discussion of this matter see References 12 to 15.

Provision has been made in the rotor limits table for inclusion of rotor limits which are a function of C_X/σ (based on rotor propulsive thrust) as well as μ (see the sketch below).

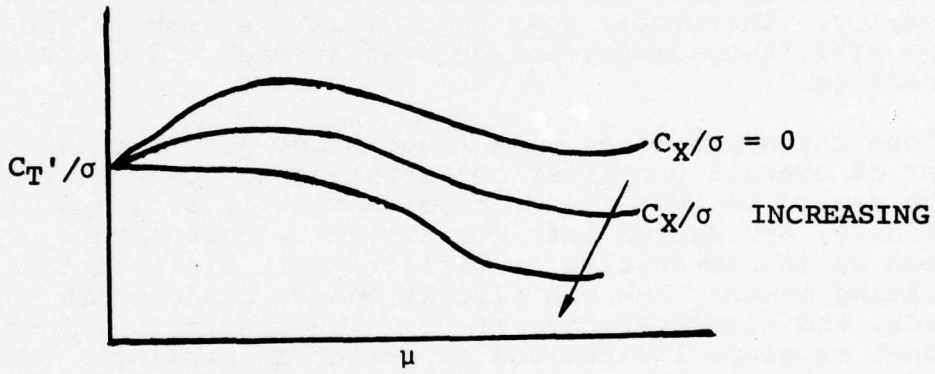

In those instances where C_X/σ is not a variable, the user simply inputs C_T'/σ versus μ at dummy values of C_X/σ (0 and 1.0). If the user wishes to operate the program without using rotor limits, large "dummy" values of C_T'/σ (say 1.0) are input at $C_X/\sigma = 0$ and 1.0.

7.4 DISCUSSION OF PROPELLER EFFICIENCY

The final selection of a propeller blade design to best suit a given compound helicopter mission is a rather arduous task because the suboptimization of many considerations, such as propeller efficiency, propeller weight, power transmission system weight, powerplant performance, and others, is required for each mission segment followed by an overall mission optimization. A single propeller design does not satisfy the requirement.

The basic problem faced in evolving a single propeller design to satisfy all flight conditions is that of achieving the optimum blade loading for each of the flight conditions. This

is virtually impossible due to the degree and manner in which thrust required and power available vary with engine and vehicle speeds. From an aerodynamic viewpoint, this basic problem manifests itself in terms of problems associated with blade chord, twist and design C_L distributions, engine-propeller performance matching, and compressibility.

Propeller blade loading is a function of the spanwise distribution of blade twist, blade chord, and blade section design lift coefficient. These three parameters must be employed so as to yield the optimum propeller performance at a given flight condition. This will occur when each section of the blade is adjusted to operate at or near its maximum lift-drag ratio while maintaining an optimum spanwise load distribution. As the operating conditions vary, the degree to which near optimum conditions can be maintained changes for a fixed blade geometry. Therefore, some compromise must take place, and best efficiency cannot be achieved at each and every operating condition.

As one can appreciate, with fixed blade geometry the attainment of overall propeller optimization is somewhat limited with regard to what can be aerodynamically achieved with twist, solidity, and design lift coefficient. Furthermore, changing these variables results in variations in blade centrifugal twisting moment, hub centrifugal loads, blade pitch control loads, and numerous other items which result in either operational envelope limitations or weight constraints. Variable blade geometry can result in aerodynamic improvements, but these may well be offset by increased weight and cost. Variable geometry propeller blade development and application, furthermore, have been quite limited.

The ability to alter propeller speed in cruise will help the designer cope with blade loading problems and result in better mission efficiency. This can be done whether by using a multiple speed power transmission system between the engine and propeller or by exercising the variable output shaft speed capability of free turbine powerplants. The former method is generally not used due to weight penalties, while the latter method is extensively employed. Engine-propeller matching, though, is not as simple as it may sound. Engine power does fall off at nonoptimum turbine speed, and transmission torque requirements and weight increase with reduced turbine speed.

The combination of vehicle speed, propeller speed, diameter and altitude produce a constraint in the form of Mach number. Exceeding a helical tip Mach number of about 0.95 appears to significantly reduce propeller efficiency.

Current state of the art regarding propeller aerodynamics appears to permit very accurate appraisal of a given propeller design performance over most of the flight envelope. Performance prediction capability is generally inadequate in the following areas: 1) static thrust, 2) at moderate to high propeller shaft angles of attack (say 30 to 90 degrees), and 3) under the "mixed" flow conditions where the blade sections are in neither wholly subsonic nor wholly supersonic flows. For purposes of preliminary design, however, the short methods for predicting propeller performance available from propeller manufacturers (e.g., Curtiss-Wright and Hamilton Standard) generally produce acceptable results, and should certainly be given consideration.

Whenever possible, the aircraft designer should consult the propeller manufactures' and his own propeller staffs early in the preliminary design phase. Lacking this, he should freely exercise the methodology published by propeller manufacturers. These methods require only several minutes to manually compute a propeller performance point and are well worth the effort. Too many preliminary aircraft designs have proceeded too far assuming propeller efficiencies in excess of the ideal induced (i.e., zero drag) value.

7.5 DISCUSSION OF PROGRAM TOLERANCES

The tolerances tabulated in Table 7-1 represent the accuracy required of iterated values calculated at certain points in the program. Whenever the values of the quantities named in Table 7-1 become less than the value quoted, the iterating calculation is terminated.

TABLE 7-1. PROGRAM TOLERANCES

SYMBOL	VALUE	VARIABLE BEING CALCULATED	SITUATION IN PROGRAM	FUNCTION OF TOLERANCE
TOL	0.01	W_G, Gross Weight	Main Control Loop	When the quantity $\|1-(W_f)_A/(W_f)_R\| \leq$ TOL, the fuel required and available are considered to be sufficiently close and the sizing calculation is terminated.
$\Delta\gamma$	0.1°	γ, Flight Path Angle	Climb & Descent Sub routines	Determines flight path angle to within 0.1°
$\frac{\Delta BHP}{BHP_A}$	0.01	$\frac{BHP_A - BHP_R}{BHP_A}$	Cruise	The cruise speed is set when BHP_R is within 0.01 BHP_A
ΔB	0.01	$\frac{B_1 - B_2}{B_2}$	CRSIND = 1	$\frac{B_1 - B_2}{B_2}$ is used to adjust ΔV to expedite computation. If $\frac{B_1 - B_2}{B_2}$ becomes less than ΔB, BHP_R always exceeds BHP_A
$\frac{\Delta(X_M/\ell_B}{(X_M/\ell_B)_C}$	0.01	$\frac{(X_M/\ell_B) - (X_M/\ell_B)_C}{(X_M/\ell_B)_C}$	Main control loop	The main rotor position is determined when W_M/ℓ_B is within 0.01 $(X_M/\ell_B)_C$
$\frac{\Delta D_{TR}}{D_{TR_I}}$	0.01	$\frac{D_{TR} - D_{TR_I}}{D_{TR_I}}$	Size trends subroutine	The tail rotor diameter is determined when D_{TR} is within 0.01 D_{TR_I}.
$\frac{\Delta\sigma TR_1}{\sigma_{TR}}$	0.01	$\frac{\sigma_{TR_1} - \sigma_{TR}}{\sigma_{TR}}$	Main control loop	The tail rotor solidity is determined when σ_{TR}, is within 0.01 σ_{TR}.
R_{TOL}	5 nm	R, Range	Descent Sub routine	If the range at the end of descent is within R_{TOL} nm of R_{max} the calculation terminates.

7.6 SAMPLE CASES

To illustrate the use of the program, three sample cases have been run and the output included here.

The first case is for a single-rotor compound helicopter with auxiliary independent cruise propulsion (T/Shaft - Propeller). This case illustrates main rotor (diameter and solidity) sizing, wing sizing for maneuver conditions, auxiliary independent engine sizing, tail rotor solidity sizing to meet hovering turn requirements, vertical tail area sizing based on tail rotor loss (in cruise) criteria, and the use of a drag trend. The primary engines and drive system are sized to meet specified takeoff and cruise requirements.

The second case is for a tandem rotor winged helicopter. It illustrates the use of the component drag buildup option, fuselage sizing based on specified rotor overlap and cabin dimensions, aft rotor pylon sizing based on an input gap/stagger ratio, wing sizing for maneuver conditions, and main rotor (diameter and solidity) sizing. The primary engines and drive systems are sized to meet specified takeoff and cruise requirements.

The third sample case is for a helicopter which has two contra-rotating, coaxial, three-bladed rigid rotors. Lift offset is employed on each rotor disc to increase lift and maintain roll trim. The need for a conventional tail anti-torque rotor is eliminated by the coaxial arrangement. Two auxiliary fuselage mounted fans driven from the primary engines are used to provide propulsive force at high speeds. This case illustrates the use of the rotor L/D_e (Type II) rotor map input (ROTIND=4) and the sizing of a helicopter without a tail anti-torque rotor (TRDIND=0). Rotor solidity and disc loading are specified to size the rotor. The engines are sized to meet either the takeoff or cruise speed requirements, whichever are critical. The main rotor transmissions were sized for full installed torque and the auxiliary transmission used to drive the auxiliary fuselage mounted fans were sized for a high speed cruise torque requirement.

7.6.1 Single Rotor Compound Helicopter (Auxiliary Independent Engines)

The design mission profile is illustrated in Figure 7-5. The more interesting and unusual inputs are discussed for this case while the more routine information is only listed. A complete copy of the program printout follows the description of the input.

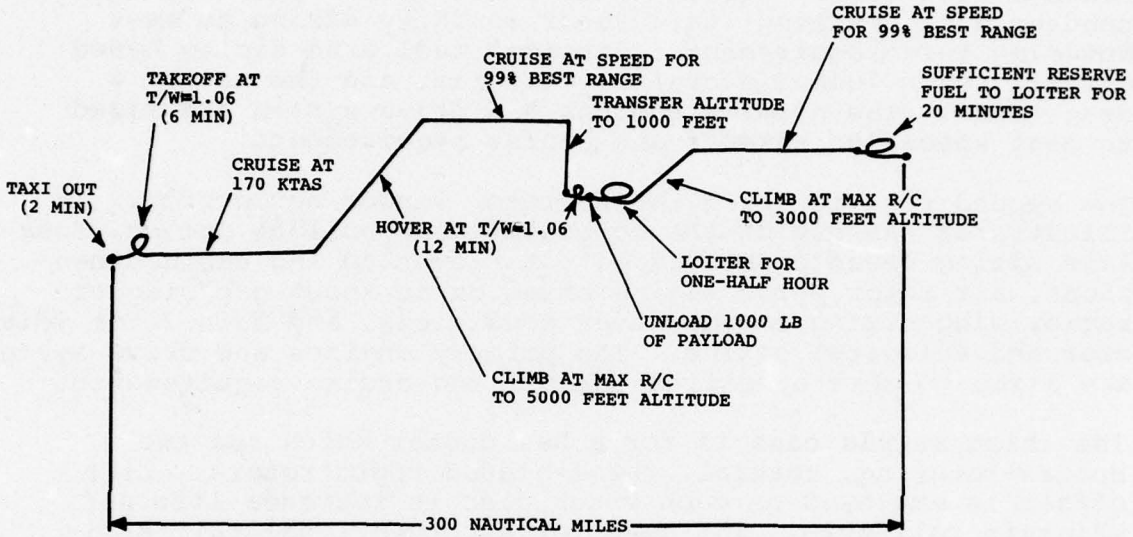

Figure 7-5. Design MSN - Sample Case Number 1.

SAMPLE CASE NO. 1

GENERAL INFORMATION SHEET

VARIABLE	LOCATION	VALUE ASSIGNED	REMARKS
OPTIND	0001	1.0	Sizing run
OPTIONAL PRINT	0002	1.0	Detailed printout desired
DRGIND	0003	2.0	GW/Fe Drag trend utilized
OSWIND	0004	0	User inputs Oswald efficiency factor
CNFIND	0005	1.0	Single-rotor helicopter
AUXIND	0006	4.0	Compound helicopter
RDMIND	0007	4.0	Main rotor diameter sized based on input disc loading; solidity sized based on input C_T/σ
FIXIND	0008	1.0	Program sizes primary engines
ROTIND	0009	1.0	Short form rotor performance method used
S_WIND	0010	3.0	Wing area sized by maneuver conditions
b_WIND	0011	1.0	Wing span sized based on input wing span/rotor diameter ratio
AIPIND	0012	2.0	Independent auxiliary engines
ENGIND	0013	0	Turboshaft auxiliary independent engines
FIXINDI	0014	1.0	Program sizes auxiliary independent engines

VARIABLE	LOCATION	VALUE ASSIGNED	REMARKS
TRDIND	0015	1.0	Tail rotor diameter sized based on tail rotor/main rotor diameter trend
TRSIND	0016	2.0	Tail rotor solidity sized based on input C_T/σ
VTFIND	0017	2.0	Vertical Fin area sized to meet configuration anti-torque requirements upon loss of tail rotor
HTIND	0018	2.0	Horizontal tail volume coefficient input
MRPIND	0019	0	Main rotor position (on fuselage) input by user
ESCIND	0022	2.0	Primary engines sized for either takeoff or cruise
WG_o	0023	25000	First guess at design gross weight
h_o	0024	0	Start altitude — Normally 0 except for partial mission analysis
R_o	0025	0	Starting range — Normally 0 except for partial mission analysis
t_o	0026	0	Starting time — Normally 0 except for partial mission analysis
$h_{OPT}IND$	0027	0	Cruise at specified altitudes
M_{MO}	0028	0.33	Maximum operating Mach number
V_{MO}	0029	220	Maximum operating EAS knots
V_{DIVE}	0030	220	Design dive speed, knots EAS

VARIABLE	LOCATION	VALUE ASSIGNED	REMARKS	
M_{LF}	0031	3.5	Maneuver load factor	
K_1	0032	1.0	Factor on mission fuel burned to give reserve fuel, i.e., 1.1 would give 10 percent reserves	
δW_f	0033	0	Fixed fuel increment for reserves or other use	
K_{FF}	0034	1.05	Increase basic engine SFC by 5 percent	
SGTIND	0035	1.0	Taxi	
	0036	2.0	Takeoff	
	0037	4.0	Cruise	
	0038	3.0	Climb	
	0039	4.0	Cruise	
	0040	9.0	Transfer altitude	Sequence of Design Mission
	0041	2.0	Takeoff	
	0042	8.0	Change payload	
	0043	6.0	Loiter	
	0044	3.0	Climb	
	0045	4.0	Cruise	
	0046	60.0	Loiter (reserve fuel)	
	0047	100.0	End of case	

HELICOPTER DIMENSIONAL INFORMATION SHEET

VARIABLE	LOCATION	VALUE ASSIGNED	REMARKS
b_W/D	0103	0.5	Wing span/main rotor diameter ratio
$(t/c)_R$	0105	0.20	Wing root thickness/ chord ratio
$(t/c)_T$	0106	0.12	Wing tip thickness/ chord ratio
$\Lambda_{c/4}$	0107	0	Quarter-chord mean sweep angle, degrees
λ	0108	0.5	Wing taper ratio (tip chord/root chord)
C_F/C	0109	1.0	Ratio of download alleviating flap chord to wing chord (1.0 signifies a fully tilting wing)
h'/h_F	0110	0.20	Ratio of vertical wing position on fuselage as a fraction of fuselage height
C_{L_D}	0111	0.8	Wing design lift coefficient
AR_{HT}	0112	4.0	Horizontal tail aspect ratio
ℓ_{TH}'	0113	1.15	Ratio of horizontal tail moment arm to main rotor radius
$(t/c)_{HT}$	0114	0.12	Horizontal tail thickness/chord ratio
$\overline{V}_H$	0115	0.0162	Horizontal tail volume coefficient
λ_H	0116	0.5	Horizontal tail taper ratio
$\Delta S_{wet}/S_F$	0120	0	Fuselage wetted area ratio

VARIABLE	LOCATION	VALUE ASSIGNED	REMARKS
ΔS_{wet}	0121	0	Incremental fuselage wetted area
h_F	0122	7.0	Fuselage height
W_F	0123	6.5	Fuselage width
$(\ell/d)_P$	0124	1.3	Fineness ratio of nose
$(\ell/d)_T$	0125	1.0	Fineness ratio of tail
ℓ_C	0126	12.	Constant diameter section length
ℓ_{RW}	0127	0	Length of ramp well
X_M/ℓ_B	0128	0.55	Main rotor position aft of the nose as a fraction of main fuselage length
$\ell_{TB}/d_{\overline{TB}}$	0129	5.0	Fineness ratio of tail boom
$d_{\overline{TTB}}/d_{\overline{TB}}$	0130	0.3	Ratio of average tail boom tip diameter to average tail boom diameter
$k_{T.\ STING}$	0131	1.1	Tail boom extends aft of the tail rotor disc by 10 percent of the tail rotor radius
λ_{VT}	0136	0.45	Vertical tail taper ratio
$(t/c)_{VT}$	0137	0.15	Vertical tail thickness/chord ratio
ζ_{VT}	0138	0.80	Vertical tail fin/tail rotor overlap ratio
K_Z	0139	0.85	Vertical position of the tail rotor center (relative to the vertical fin root chord) as a fraction of tail rotor radius

VARIABLE	LOCATION	VALUE ASSIGNED	REMARKS
$C_{L_{DES}}$	0140	0.5	Vertical tail fin design lift coefficient
V_{DES}	0141	180	Vertical tail fin sized to provide aircraft directional stability at 180 kts in event of tail rotor loss
Z_1	0142	0.035	Primary engine nacelle constants
Z_2	0143	2.0	
Z_3	0144	0.078	
Z_4	0146	0.035	Auxiliary independent engine nacelle constants
Z_5	0147	2.0	
Z_6	0148	0.078	
$(t/c)_{R_F}$	0152	0.40	Forward rotor pylon root thickness/chord ratio
$(t/c)_{T_F}$	0153	0.20	Forward rotor pylon tip thickness/chord ratio
AR_{FP}	0154	0.5	Forward rotor pylon aspect ratio
λ_{FP}	0155	0.4	Forward rotor pylon taper ratio
h_{p_1}	0156	3.0	Forward rotor pylon height
MAIN ROTOR DIMENSIONAL DATA SHEET			
ROTOR CYCLE NO.	0171	3	Rotor blade section aerodynamic characteristics selection
N_R	0172	1.0	Number of rotors
W/A	0173	11.0	Disc loading
b_{MR}	0176	4.0	Number of blades/main rotor

VARIABLE	LOCATION	VALUE ASSIGNED	REMARKS
$\theta_{T_{MR}}$	0177	-9.0	Main rotor twist (deg)
$X_{C_{MR}}$	0178	0.25	Main rotor blade cutout as a fraction of radius
X_{MR}	0179	0.075	Main rotor blade attachment point as a fraction of radius
$(t/c)_{.25R}$	0180	0.10	Rotor blade thickness/chord at 25 percent radius
V_{TIP}	0181	725	Main rotor tip speed
$(C_T/\sigma)_H$	0182	0.12	Rotor "lift coefficient" for hover sizing solidity
T/W	0183	1.06	Rotor design thrust/weight ratio
$V_{KT}(c)$	0184	165	Cruise flight conditions for sizing rotor solidity
$h_c(c)$	0185	3000	
ΔT_{IN_C}	0186	43.2	
$(C_T/\sigma)_{CR}$	0187	0.110	Rotor "lift coefficient" for sizing rotor solidity in cruise flight
$g_{REQM'T}$	0188	1.75	Total g requirement, helicopter must satisfy
g (ROTOR)	0189	1.35	Maneuver g's carried by main rotor
N (ROTOR LOADING)	0190	1.00	Rotor lift/GW for 1g cruise flight rotor solidity sizing
V_{CEH1}	0191	1.53	Main rotor vertical rate-of-climb efficiency factors
V_{CEH2}	0192	0	
$K_{P_{CLIMB}}$	0193	0.85	Helicopter forward flight climb efficiency

TAIL ROTOR DIMENSIONAL DATA SHEET

VARIABLE	LOCATION	VALUE ASSIGNED	REMARKS
b_{TR}	0203	5.0	No. of blades/tail rotor
θT_{TR}	0204	-4.0	Tail rotor twist (deg)
$X_{C_{TR}}$	0205	0.3	Tail rotor blade cutout as a fraction of radius
X_{TR}	0206	0.075	Tail rotor blade attachment point as a fraction of radius
V_{TTR}	0207	690	Tail rotor tip speed
$(C_T/\sigma)_{DES}(H)$	0208	0.17	Tail rotor limiting design rotor "lift coefficient"
$\ddot{\psi}$	0209	0.30	Helicopter yaw acceleration, rad/sec^2
$\dot{\psi}$	0210	0.75	Helicopter yaw rate, rad/sec
$C_{T_G}/C_{T_{NET}}$	0211	1.00	Vertical tail fin/tail rotor sideload ratio (when input as 1.00, program calculates a value of $C_{T_G}/C_{T_{Net}}$ based on tail fin/rotor geometry)
$\overline{C}$	0212	0.72	Tail rotor induced velocity ratio for a pusher type tail rotor (see fig. 4-21, sect. 4.8)
K_{ZZZ}	0213	1.00	Single rotor helicopter yaw moment of inertia trend adjustment factor (nominally = 1.00)
$g_{MR/TR}$	0214	1.0	Gap between main and tail rotor disc (ft)

VARIABLE	LOCATION	VALUE ASSIGNED	REMARKS
K_{TRS}	0215	1.05	Tail rotor solidity increased 5 percent over that dictated by hovering turn requirements
$C_{L_{FIN}}$	0216	0	Vertical tail fin operating cruise lift coefficient

PRIMARY ENGINE SIZING INFORMATION SHEET

VARIABLE	LOCATION	VALUE ASSIGNED	REMARKS
PRIMARY ENGINE CYCLE NO.	0217	1.761	Primary engine selection
N_P	0219	2.0	No. of primary engines
XMSNIND	0220	2.0	Drive system rated at power required to hover or cruise (more critical of the two conditions selected by program)
SHP_{MRX}/SHP^*_{MR}	0221	1.0	Main rotor drive system is rated at 100 percent of main rotor design power
η_T	0223	0.97	Transmission efficiency
ΔSHP_{ACC}	0224	100	Accessory power losses
SHP_{TRX}/TRP^*	0225	1.0	Tail rotor drive system is rated at 100 percent of tail rotor design power
SHP_{ARX}/SHP^*_{AUX}	0226	1.0	Aux propulsion drive system is rated at 100 percent of aux propulsion design power
$h_{TO}(H)$	0227	4000	Design point hover altitude (engine sizing)

VARIABLE	LOCATION	VALUE ASSIGNED	REMARKS
$(T/W)_D$	0228	1.06	Configuration design point hover thrust/ weight ratio
$(N_{II}/N_{II_{MAX}})_{TO}$	0230	1.105	Main rotor operating at 100 percent of hover tip speed (725 fps); i.e. $\left(\frac{N_{II}}{N_{II_{MAX}}}\right)_{TO}\left(\frac{N_{II_{MAX}}}{N_{II^*}}\right)V_T$ $= (1.105)(.905)(725)$ $= 725$
N_{PSD}	0231	0	No. of engines inoperative at hover design point conditions
SHP_E/SHP^*	0232	0.95	Engines sized to permit operation in hover (OGE) at 95 percent of the maximum rated power
h_c	0235	3000	Design point (cruise) altitude (engine sizing)
V_c	0236	170	Design point cruise speed (engine sizing)
$(T_{AUX}/T_{TOT})_c$	0239	0.75	75 percent of propulsive thrust provided by aux. propulsion at cruise conditions for engine sizing
$C_{L_{D_P}}$	0240	0.3	Wing operating lift coefficient at cruise conditions for engine sizing
$(N_{PSD})_C$	0241	0	No. of primary engines shut down during cruise (for engine sizing)

AUXILIARY INDEPENDENT ENGINE SIZING INFORMATION SHEET

VARIABLE	LOCATION	VALUE ASSIGNED	REMARKS
AUX PROPULSION ENGINE CYCLE NO.	0242	1.761	Auxiliary independent engine selection
N_p	0245	1.0	Helicopter has one aux. independent engine
POWIND	0246	2	Aux. independent engine sized to provide 75 percent of configuration propulsive thrust at NRP

PROPELLER DATA REQUIRED FOR COMPOUND HELICOPTER AUX PROPULSION INFORMATION SHEET

VARIABLE	LOCATION	VALUE ASSIGNED	REMARKS
$V_{T_{AR}}$	0249	900	Propeller tip speed
DIA	0250	10	Propeller diameter
X_{AR}	0251	0.075	Propeller blade attachment point as fraction of radius
$\eta_{T_{AUX}}$	0252	0.97	Auxiliary drive system transmission efficiency
η_pIND	0253	0	"Point" propeller efficiencies specified for climb and cruise
η_{P3}	0254	0.82	Propeller efficiency in climb
AF/Blade	0257	140	3-way propeller, 140 activity factor/blade
No. of Blades	0258	3	

HELICOPTER AERODYNAMICS INFORMATION SHEET

VARIABLE	LOCATION	VALUE ASSIGNED	REMARKS
(GW/Fe)	0312	1130	Drag trend constants derived from data such as illustrated by fig. 4-26, section 4-9
K_{FED}	0313	.555	
e	0314	0.75	Wing "span loading" efficiency factor
TFEF	0315	1.0	Tail fin aspect ratio effectiveness factor (nominally = 1.0)
$(Re/\ell)_i$	0328	1.464×10^6	Mean Reynolds No./ft based on primary engine cruise sizing flight conditions
C_{l_α}	0329	6.28	Wing 2-D lift curve slope
C_L-C_D TABLE	0330 -0345		See input values on sample output sheets

ROTOR LIMITS INFORMATION SHEET

	0347 -0377	This case has been run using "dummy" rotor limit values (as explained in Sec. 7.3). For actual "dummy" values used, refer to the appropriate locations on the output sheets

HELICOPTER WEIGHT INFORMATION

	2601 -2673	This is fully explained in Section 4.11. Refer to the output sheets for the actual values used.

TAXI INFORMATION

t_T	0411	0.0333	Taxi for 2 minutes
K_{FI}	0431	1.0	Auxiliary engine fuel flow multiplicative factor

TAKEOFF, HOVER, AND LANDING INFORMATION

VARIABLE	LOCATION	VALUE ASSIGNED	REMARKS
TOLIND	0461	1.0	Specify required T/W for hover out-of-ground ef effect
	0462	1.0	
t_H	0551	0.1	Hover for 6 minutes
	0552	0.2	Hover for 12 minutes

CLIMB INFORMATION

CLMIND	0571	1.0	Climb at maximum rate of climb, limited by NRP available
	0572	1.0	
T_{AUX}/T_{TOT}	0691	0	All propulsive thrust provided by main rotor
	0692	0	
$C_{L_{WING}}$	0601	0.3	Wing operating C_L in climb
	0602	0.4	
$N_{PSD_{CL}}$	0681	1.0	One primary engine shut down during climb
	0682	1.0	
$N_{PSDi_{CL}}$	0701	1.0	Auxiliary independent engine shut down during climb
	0702	1.0	

CRUISE INFORMATION

CRSIND	0721	2.0	Cruise at specified TAS
	0722	4.0	Cruise at 99 percent best range speed
	0723	4.0	
T_{AUX}/T_{TOT}	0841	0.55	Propeller/main rotor propulsive thrust split during cruise segments
	0842	0.60	
	0843	0.70	
$C_{L_{WING}}$	0751	0.5	Wing operating C_L in cruise
	0752	0.5	
	0753	0.5	
R_{MAX}	0791	60	Values of range at end of each cruise
	0792	150	
	0793	300	

LOITER INFORMATION

VARIABLE	LOCATION	VALUE ASSIGNED	REMARKS
T_{AUX}/T_{TOT}	1111	0.35	Propeller/main rotor propulsive thrust split in loiter
	1112	0.35	
C_{L_W}	1041	0.4	Wing operating C_L in loiter
	1042	0.4	
t_L	1081	0.5	Loiter for 30 minutes
	1082	0.25	Loiter for 15 minutes for reserve fuel purposes

TRANSFER ALTITUDE SHEET

ΔW_{PL}	1161	-1000	Unload 1000 pounds of payload after 12 minutes of hovering

PRIMARY ENGINE CYCLE DATA; NON-STANDARD PERFORMANCE

N2IND	1204	2.0	A non-optimum N_{II} variation will be used
$N_{II_{MAX}}/N^*_{II}$	1223	0.905	Maximum power turbine speed is 90.5 percent of rated value (static, max power, sea level standard)

AUX. INDEPENDENT ENGINE CYCLE DATA; NON-STANDARD PERFORMANCE

N2INDI	2204	2.0	A non-optimum N_{II} variations will be used
$N_{II_{MAX}}/N^*_{II}$	2223	0.905	Maximum power turbine speed is 90.5 percent of rated value (static max power, sea level standard)

The sample case output follows:

SAMPLE CASE NO. 1

H E S C O M P

HELICOPTER SIZING & PERFORMANCE COMPUTER PROGRAM B-91

THE FOLLOWING IS A CARD BY CARD REPRODUCTION OF THE INPUT DECK FOR THIS CASE

LOC. CORRESPONDS TO LOCATION NUMBER GIVEN ON INPUT SHEET
NUM STANDS FOR THE NUMBER OF SEQUENTIAL INPUT VALUES STARTING WITH LOC. (MAX. =5)
VAL EQUALS VALUE FOR VARIABLE CORRESPONDING TO LOC.
VAL1 VALUE CORRESPONDING TO LOC.+0001
VAL2 VALUE CORRESPONDING TO LOC.+0002
ETC.

LOC.	NUM	VAL	VAL1	VAL2	VAL3	VAL4
1201	5	0.0	0.0	0.0	2.0000	0.0
1206	1	0.0				
1223	1	0.90500				
1301	5	1.7610	0.15900	0.0	0.32000E-01	950.00
1306	5	1100.0	1856.0	2000.0	2000.0	8.0000
1311	5	950.00	1200.0	1400.0	1600.0	1800.0
1316	5	2000.0	2200.0	2600.0	5.0000	0.0
1321	4	0.20000	0.40000	0.60000	0.80000	
1326	5	0.25000E-01	0.25700E-01	0.27800E-01	0.31300E-01	0.36200E-01
1332	5	0.16300	0.16760	0.18130	0.20410	0.23600
1338	5	0.33500	0.34440	0.37250	0.41940	0.48510
1344	5	0.54400	0.55920	0.60490	0.68110	0.78770
1350	5	0.77000	0.79160	0.85620	0.96400	1.1150
1356	5	1.0000	1.0280	1.1120	1.2520	1.4480
1362	5	1.2000	1.2336	1.3344	1.5024	1.7376
1368	5	1.5500	1.5934	1.7236	1.9406	2.2444
1374	5	8.0000	950.00	1200.0	1400.0	1600.0
1379	5	1800.0	2000.0	2200.0	2600.0	5.0000
1384	5	0.0	0.20000	0.40000	0.60000	0.80000
1390	5	0.65000E-01	0.65100E-01	0.65300E-01	0.67000E-01	0.71000E-01
1396	5	0.11500	0.11600	0.11800	0.12800	0.14000
1402	5	0.18000	0.18100	0.19000	0.20800	0.22700
1408	5	0.26000	0.26100	0.27300	0.29500	0.32500
1414	5	0.34200	0.34700	0.36200	0.38900	0.42500
1420	5	0.42500	0.43500	0.45100	0.48600	0.51700
1426	5	0.50000	0.51100	0.53000	0.56000	0.61000
1432	5	0.62600	0.63100	0.66000	0.71800	0.78000
1438	4	3.0000	950.00	1600.0	2600.0	
1447	4	3.0000	0.0	0.40000	0.80000	
1454	3	0.26000	0.27100	0.29000		
1460	3	0.82000	0.84000	0.90000		
1466	3	1.0900	1.1180	1.1650		
1502	5	8.0000	950.00	1200.0	1400.0	1600.0
1507	5	1800.0	2000.0	2200.0	2600.0	5.0000
1512	5	0.0	0.20000	0.40000	0.60000	0.80000
1518	5	0.26000	0.26500	0.27100	0.28000	0.29000
1524	5	0.52000	0.52700	0.54000	0.56000	0.59000
1530	5	0.68000	0.69000	0.70500	0.73000	0.76000

NOTE : IN USING AUXILIARY ENGINES ; AUXILIARY ENGINE CYCLE INPUT LOCATIONS CAN BE CREATED BY PLACING A 66666 CARD IN FRONT AND BEHIND A STANDARD ENGINE CYCLE

1536	5	0.82000	0.82400	0.84000	0.86800	0.90000
1542	5	0.92000	0.93000	0.95000	0.98000	1.0200
1548	5	1.0000	1.0020	1.0200	1.0500	1.0900
1554	5	1.0520	1.0550	1.0700	1.1000	1.1310
1560	5	1.0900	1.1000	1.1180	1.1350	1.1650
2201	5	0.0	0.0	0.0	2.0000	0.0
2206	1	0.0				
2223	1	0.90500				
2301	5	1.7610	0.15900	0.0	0.32000E-01	950.00
2306	5	1100.0	1856.0	2000.0	2000.0	8.0000
2311	5	950.00	1200.0	1400.0	1600.0	1800.0
2316	5	2000.0	2200.0	2600.0	5.0000	0.0
2321	4	0.20000	0.40000	0.60000	0.80000	
2326	5	0.25000E-01	0.25700E-01	0.27800E-01	0.31300E-01	0.36200E-01
2332	5	0.16300	0.16760	0.18130	0.20410	0.23600
2338	5	0.33500	0.34440	0.37250	0.41940	0.48510
2344	5	0.54400	0.55920	0.60490	0.68110	0.78770
2350	5	0.77000	0.79160	0.85620	0.96400	1.1150
2356	5	1.0000	1.0280	1.1120	1.2520	1.4480
2362	5	1.2000	1.2336	1.3344	1.5024	1.7376
2368	5	1.5500	1.5934	1.7236	1.9406	2.2444
2374	5	8.0000	950.00	1200.0	1400.0	1600.0
2379	5	1800.0	2000.0	2200.0	2600.0	5.0000
2384	5	0.0	0.20000	0.40000	0.60000	0.80000
2390	5	0.65000E-01	0.65100E-01	0.65300E-01	0.67000E-01	0.71000E-01
2396	5	0.11500	0.11600	0.11800	0.12800	0.14000
2402	5	0.18000	0.18100	0.19000	0.20800	0.22700
2408	5	0.26000	0.26100	0.27300	0.29500	0.32500
2414	5	0.34200	0.34700	0.36200	0.38900	0.42500
2420	5	0.42500	0.43500	0.45100	0.48600	0.51700
2426	5	0.50000	0.51100	0.53000	0.56000	0.61000
2432	5	0.62600	0.63100	0.66000	0.71800	0.78000
2438	4	3.0000	950.00	1600.0	2600.0	
2447	4	3.0000	0.0	0.40000	0.80000	
2454	3	0.26000	0.27100	0.29000		
2460	3	0.82000	0.84000	0.90000		
2466	3	1.0900	1.1180	1.1650		
2502	5	8.0000	950.00	1200.0	1400.0	1600.0
2507	5	1800.0	2000.0	2200.0	2600.0	5.0000
2512	5	0.0	0.20000	0.40000	0.60000	0.80000
2518	5	0.26000	0.26500	0.27100	0.28000	0.29000
2524	5	0.52000	0.52700	0.54000	0.56000	0.59000
2530	5	0.68000	0.69000	0.70500	0.73000	0.76000
2536	5	0.82000	0.82400	0.84000	0.86800	0.90000
2542	5	0.92000	0.93000	0.95000	0.98000	1.0200
2548	5	1.0000	1.0020	1.0200	1.0500	1.0900
2554	5	1.0520	1.0550	1.0700	1.1000	1.1310
2560	5	1.0900	1.1000	1.1180	1.1350	1.1650
1601	2	3.0000	-9.0000			
1603	5	0.99500E-02	-0.28000E-01	0.26200	0.27600	2.4500
1608	1	0.86500				
1609	5	0.10500E-01	2.8200	0.90000E-01	1.1700	0.12400E-02
1614	2	0.75800	0.74300			
1616	5	10.000	0.0	0.40000E-02	0.70000E-02	0.90000E-02
1621	5	0.10000E-01	0.11000E-01	0.11500E-01	0.12000E-01	0.15500E-01
1626	5	0.22000E-01	1.0180	1.0850	1.1540	1.2330
1631	5	1.2790	1.3140	1.3270	1.3370	1.3640
1636	1	1.3970				
1	1	1.0000				
2	1	1.0000				

3	2	2.0000	0.0			
5	5	1.0000	4.0000	4.0000	1.0000	1.0000
10	5	3.0000	1.0000	2.0000	0.0	1.0000
15	5	1.0000	2.0000	2.0000	2.0000	0.0
22	1	2.0000				
23	4	25000.	0.0	0.0	0.0	
27	1	0.0				
28	3	0.33000	220.00	220.00		
31	1	3.5000				
32	3	1.0000	0.0	1.0500		
35	5	1.0000	2.0000	4.0000	3.0000	4.0000
40	5	9.0000	2.0000	8.0000	6.0000	3.0000
45	3	4.0000	60.000	100.00		
103	1	0.50000				
105	5	0.20000	0.12000	0.0	0.50000	1.0000
110	2	0.20000	0.80000			
112	5	4.0000	1.1500	0.12000	0.16200E-01	0.50000
120	2	0.0	0.0			
122	5	7.0000	6.5000	1.3000	1.0000	12.000
127	5	0.0	0.55000	5.0000	0.30000	1.1000
136	5	0.45000	0.15000	0.80000	0.85000	0.50000
141	1	180.00				
142	4	0.35000E-01	2.0000	0.78000E-01	0.10000E 00	
146	5	0.35000E-01	2.0000	0.78000E-01	0.0	0.0
151	1	0.10000E 00				
152	5	0.40000	0.20000	0.50000	0.40000	3.0000
171	1	3.0000				
172	2	1.0000	11.000			
176	5	4.0000	-9.0000	0.25000	0.75000E-01	0.10000E 00
181	1	725.00				
182	2	0.12000	1.0600			
184	5	165.00	3000.0	43.200	0.11000	1.7500
189	2	1.3500	1.0000			
191	2	1.5300	0.0			
193	1	0.85000				
203	5	5.0000	-4.0000	0.30000	0.75000E-01	690.00
208	5	0.17000	0.30000	0.75000	1.0000	0.72000
213	3	1.0000	1.0000	1.0500		
216	1	0.0				
217	1	1.7610				
219	1	2.0000				
220	2	2.0000	1.0000			
223	2	0.97000	100.00			
225	2	1.0000	1.0000			
227	5	4000.0	1.0600	50.300	1.1050	0.0
232	2	0.95000	0.0			
234	5	2.0000	3000.0	170.00	43.200	1.1050
239	3	0.75000	0.30000	0.0		
242	1	1.7610				
245	1	1.0000				
246	2	2.0000	1.1050			
248	5	1.0000	900.00	10.000	0.75000E-01	0.97000
253	1	0.0				
254	2	0.82000	0.80000			
257	2	140.00	3.0000			
261	1	4.0000				
262	4	0.0	0.20000	0.40000	0.80000	
272	4	0.85000	0.83000	0.80000	0.78000	
312	4	1130.0	0.55500	0.75000	1.0000	
323	1	0.0				

327	1	1.0200				
328	1	0.14640E 07				
329	1	6.2800				
330	1	7.0000				
331	5	0.0	0.20000	0.40000	0.60000	0.80000
336	2	1.0000	1.4000			
339	5	0.60000E-02	0.62000E-02	C.70000E-02	0.80000E-02	0.95000E-02
344	2	0.12000E-01	0.20000E-01			
2602	3	2200.0	450.00	2000.0		
2605	3	100.00	0.0	0.0		
2608	5	0.0	0.0	0.0	0.0	0.0
2613	5	25.000	25.000	25.000	0.0	0.0
2618	4	30.000	0.18000	25.000	0.0	
2622	5	125.00	2.0800	0.40000E-01	0.80000	0.0
2627	5	1.0000	0.0	2.0600	2.0000	24.100
2632	5	1.0000	0.75000	1.0000	0.75000	0.0
2637	5	44.000	2.2000	61.000	0.28600	1.1500
2642	5	14.200	14.200	1.0000	1.0000	250.00
2647	5	3.0000	250.00	250.00	1.0000	0.11000
2652	2	0.17000	0.17000			
2654	5	1.0000	1.0000	1.0000	1.0000	1.0000
2659	5	1.0000	1.0000	1.0000	1.0000	1.0000
2664	1	1.0000				
2665	5	1.0000	1.0000	1.0000	1.0000	1.0000
2670	4	1.0000	1.0000	1.0000	1.0000	
347	2	3.0000	3.0000			
349	3	0.0	0.50000	1.0000		
354	3	0.0	0.50000	1.0000		
361	3	1.0000	1.0000	1.0000		
368	3	1.0000	1.0000	1.0000		
375	3	1.0000	1.0000	1.0000		
401	1	0.0				
411	1	0.33300E-01				
421	1	0.0				
431	1	1.0000				
441	1	1.1050				
461	2	1.0000	1.0000			
481	2	0.0	0.0			
501	2	0.0	0.0			
511	2	0.0	0.0			
521	2	1.0600	1.0600			
531	2	0.20000E-01	0.20000E-01			
541	2	1.1050	1.1050			
551	2	0.10000E 00	0.20000			
571	2	1.0000	1.0000			
591	2	0.0	0.0			
601	2	0.30000	0.40000			
611	2	0.0	0.0			
621	2	500.00	500.00			
631	2	2.0000	2.0000			
641	2	5000.0	3000.0			
651	2	1.1050	1.1050			
661	2	6.0000	6.0000			
671	2	1.1050	1.1050			
681	2	1.0000	1.0000			
691	2	0.0	0.0			
701	2	1.0000	1.0000			
721	3	2.0000	4.0000	4.0000		
731	1	170.00				
741	3	0.0	0.0	0.0		

751	3	0.50000	0.50000	0.50000		
761	3	0.0	0.0	0.0		
771	3	15.000	15.000	15.000		
781	3	2.0000	2.0000	2.0000		
791	3	60.000	150.00	300.00		
801	3	1.1050	1.1050	1.1050		
811	3	0.0	0.0	0.0		
821	3	1.1050.	1.1050	1.1050		
831	3	0.0	0.0	0.0		
841	3	0.55000	0.60000	0.70000		
851	3	0.0	0.0	0.0		
1031	2	0.0	0.0			
1041	2	0.40000	0.40000			
1051	2	0.0	0.0			
1061	2	0.50000E-01	0.50000E-01			
1071	2	1.1050	1.1050			
1081	2	0.50000	0.25000			
1091	2	1.1050	1.1050			
1101	2	0.0	0.0			
1111	1	0.35000				
1121	2	0.0	0.0			
1131	2	0.0	0.0			
1161	1	-1000.0				
1171	1	0.10000E-01				
1181	1	1000.0				
1191	1	1.0000				
1201	5	0.0	0.0	0.0	2.0000	0.0
1206	1	0.0				
1223	1	0.90500				
2201	5	0.0	0.0	0.0	2.0000	0.0
2206	1	0.0				
2223	2	0.90500	0.0			

WG = 0.250000E 05 WFA = 0.252188E 09 WFR = 0.240063E 03
WG = 0.250000E 05 WFA = 0.762003E 04 WFR = 0.498839E 04
WG = 0.212405E 05 WFA = 0.559342E 04 WFR = 0.432330E 04
WG = 0.177334E 05 WFA = 0.385260E 04 WFR = 0.369733E 04

SAMPLE CASE NO. 1

H E S C O M P

HELICOPTER SIZING & PERFORMANCE COMPUTER PROGRAM B-91

SINGLE ROTOR COMPOUND HELICOPTER AUX. INDEPENDENT T/SHAFT CRUISE PROPULSION

S I Z E D A T A THIS RUN CONVERGED IN 4 ITERATIONS

GROSS WEIGHT = 17245. LB

FUSELAGE

LF	LENGTH(BODY+TAILBOOM)	49.7 FT.
LC	LENGTH(CABIN)	12.0 FT.
LB	LENGTH(BODY)	27.5 FT.
LTB	LENGTH(TAILBOOM)	22.2 FT.
XM	FWD. ROTOR LOCATION	15.1 FT.
WF	WIDTH	6.5 FT.
SF	WETTED AREA	729.9 SQ. FT.

WING

AR	ASPECT RATIO	4.51
SW	AREA	110.8 SQ. FT.
BW	SPAN	22.3 FT.
CBARW	MEAN CHORD	5.0 FT.
LAMBDA C/4	QUARTER CHORD SWEEP	0.0 DEG.
LAMBDA	TAPER RATIO	0.500
(T/C)R	ROOT THICKNESS/CHORD	0.200
(T/C)T	TIP THICKNESS/CHORD	0.120
WG/SW	WING LOADING	155.7 LBS/SQ. FT.
GRW	ROTOR/WING GAP	8.6 FT.
CF/C	FLAP CHORD/MEAN CHORD RATIO	1.000

HOR. TAIL

ARHT	ASPECT RATIO	4.000
SHT	AREA	34.7 SQ. FT.
BHT	SPAN	11.8 FT.
CBARHT	MEAN CHORD	2.9 FT.
LAMBDA H	TAPER RATIO	0.500
(T/C)HT	THICKNESS/CHORD	0.120
LTH	HOR. TAIL ARM	25.7 FT.

VERT. TAIL

ARVT	ASPECT RATIO	1.637
SVT	AREA	19.2 SQ. FT.
BVT	SPAN	5.6 FT.
CBARVT	MEAN CHORD	3.4 FT.
LAMBDA VT	TAPER RATIO	0.450
ZTR	TAIL ROTOR(VERT.) LOCATION	4.5 FT.
ZETAVT	TAIL ROTOR/VERT. TAIL OVERLAP RATIO	0.800

(T/C)VT	THICKNESS/CHORD	0.150

MAIN ROTOR PYLON

AR	ASPECT RATIO	0.500
SFP	WETTED AREA	39.1 SQ. FT.
FAFP	FRONTAL AREA	6.2 SQ. FT.
HP1	HEIGHT	3.0 FT.
CBARFP	MEAN CHORD	6.0 FT.
LAMBDA FP	TAPER RATIO	0.400
(T/C)R	ROOT THICKNESS/CHORD	0.400
(T/C)T	TIP THICKNESS/CHORD	0.200

PRIMARY ENGINE NACELLE

LN	LENGTH	5.7 FT.
DN	MEAN DIAMETER	2. FT.
SN	WETTED AREA(TOTAL FOR ALL ENGINES)	59.5 SQ. FT.

AUXILIARY INDEPENDENT ENGINE NACELLE

LNI	LENGTH	4.8 FT.
DNI	MEAN DIAMETER	1. FT.
SNI	WETTED AREA(TOTAL FOR ALL ENGINES)	19. SQ. FT.

AUXILIARY INDEPENDENT ENGINE NACELLE STRUT

SSTR	WETTED AREA(TOTAL)	0. SQ. FT.
BNS	SPAN	0.1 FT.
CNS	MEAN CHORD	2.8 FT.

PROPELLER(AUXILIARY PROPULSION)

DAR	DIAMETER	10.0 FT.
AF	ACTIVITY FACTOR PER BLADE	140.0
SIGAR	SOLIDITY	0.171
NRA	NO. OF PROPELLERS	1.
NO. BLADES	NO. OF BLADES/PROP	3.
VTIP	TIP SPEED	900. FT./SEC

MAIN ROTOR

DMR	DIAMETER	44.7 FT.
SIGMR	SOLIDITY	0.128
WG/A	DISC LOADING	11.0 LB/SQ. FT.
CT/SIGMA	THRUST COEFF./SOLIDITY	0.110
NR	NO. OF ROTORS	1.
NO. BLADES	NO. OF BLADES/ROTOR	4.
THETA	BLADE TWIST	-9.000 DEG.
XC	BLADE CUTOUT/RADIUS RATIO	0.250
VTIP	TIP SPEED	725. FT./SEC.

TAIL ROTOR

DTR	DIAMETER	10.7 FT.
SIGTR	SOLIDITY	0.232
(T/A)NET	NET DISC LOADING	17.6 LB./SQ. FT.
CT/SIGMA	THRUST COEFF./SOLIDITY	0.170
NO. BLADES	NO. OF BLADES/ROTOR	5.
THETA	BLADE TWIST	-4.000 DEG.

XCTR	BLADE CUTOUT/RADIUS RATIO	0.300
G	MAIN/TAIL ROTOR GAP	1.0 FT.
VTIP	TIP SPEED	690. FT./SEC.

SAMPLE CASE NO. 1

H E S C O M P

HELICOPTER SIZING & PERFORMANCE COMPUTER PROGRAM B-91

W E I G H T S D A T A IN LBS

	MLF	MANEUVER LOAD FACTOR	3.500		
	GLF	GUST LOAD FACTOR	1.508		
	ULF	ULTIMATE LOAD FACTOR	5.250		
PROPULSION GROUP					
	WPRG	TOTAL MAIN ROTOR GROUP	1717.		
K12	WPRB	MAIN ROTOR BLADE (PER ROTOR)		993.	
K13	WPH	MAIN ROTOR HUB (PER ROTOR)		500.	
	WBF	BLADE FOLDING(PER ROTOR)		224.	
K15	WAR	AUXILIARY PROPULSION ROTOR GROUP	131.		
	WDS	DRIVE SYSTEM	1645.		
K16	WPDS	MAIN ROTOR DRIVE SYSTEM		1330.	
K20	WTRDS	TAIL ROTOR DRIVE SYSTEM		111.	
K17	WADS	AUXILIARY PROPULSION DRIVE SYSTEM		203.	
K18	WEP	PRIMARY ENGINES	716.		
K19	WEA	AUXILARY ENGINES	201.		
	WPEI	PRIMARY ENGINE INSTALLATION	122.		
	WAEI	AUXILIARY ENGINE INSTALLATION	34.		
	WFS	FUEL SYSTEM	397.		
DELTA	WP	PROPULSION GROUP WEIGHT INCREMENT	0.		
	WP	TOTAL PROPULSION GROUP WEIGHT			4961.
STRUCTURES GROUP					
K8	WW	WING	228.		
	WTG	TAIL GROUP	186.		
K9	WHT	HOR. TAIL		69.	
K14	WTR	TAIL ROTOR		116.	
K6	WB	FUSELAGE	1877.		
K7	WLG	LANDING GEAR	690.		
	WNG	NOSE GEAR		138.	
	WMG	MAIN GEAR		552.	
	WTES	TOTAL ENGINE SECTION	194.		
	WPES	PRIMARY ENGINE SECTION		142.	
	WAES	AUXILIARY ENGINE SECTION		51.	
DELTA	WST	STRUCTURE WEIGHT INCREMENT	0.		
	WST	TOTAL STRUCTURE WEIGHT			3174.
FLIGHT CONTROLS GROUP					
	WPFC	PRIMARY FLIGHT CONTROLS	696.		
	WCC	COCKPIT CONTROLS		80.	
K1	WRC	MAIN ROTOR CONTROLS		343.	
K2	WSC	MAIN ROTOR SYSTEMS CONTROLS		242.	
K3	WFW	FIXED WING CONTROLS		0.	
	WTM	TILT MECHANISM		0.	
	WSAS	SAS		30.	
	WAFC	AUXILIARY FLIGHT CONTROLS	55.		
K4	WRCA	AUX. PROPULSION ROTOR CONTROLS		24.	

K5	WSCA	AUX. PROPULSION ROTOR SYS. CONTROLS	31.	
	WMC	MISCELLANEOUS CONTROLS	0.	
DELTA	WFC	CONTROL WEIGHT INCREMENT	100.	
	WFC	TOTAL CONTROL WEIGHT		851.
	WFE	WEIGHT OF FIXED EQUIPMENT		2200.
	WE	WEIGHT EMPTY		11186.
	WFUL	FIXED USEFUL LOAD		450.
	OWE	OPERATING WEIGHT EMPTY		11636.
	WPL	PAYLOAD		2000.
	(WF)A	FUEL		3609.
	WG	GROSS WEIGHT		17245.

SAMPLE CASE NO. 1

H E S C O M P
HELICOPTER SIZING & PERFORMANCE COMPUTER PROGRAM B-91

R O T O R D A T A

ROTOR CYCLE NO. 3.0000

MAIN ROTOR SOLIDITY SIZED BY MANUEVER CONDITIONS
H = 3000.0 FT. , TEMP = 91.5 DEG. , V = 165.0 KT.
ROTOR MANUEVER G'S = 1.350 , CT/SIGMA = 0.110

TAIL ROTOR SIZED AT 1.050 TIMES THE SOLIDITY
REQUIRED TO SATISFY HOVERING TURN REQUIREMENTS AT :

H	=	4000.0	FT.
TEMP	=	95.035	DEG.,F,
CTG/CTNET	=	1.221	
YAW RATE	=	0.750	RAD/SEC.
YAW ACCELERATION	=	0.300	RAD/SEC2
TAIL ROTOR POLAR MOM. OF INERTIA(PER BLADE)	=	3.800	SLUG/FT2
HELICOPTER YAW MOM. OF INERTIA	=	35178.4	SLUG/FT2

SAMPLE CASE NO. 1

H E S C O M P
HELICOPTER SIZING & PERFORMANCE COMPUTER PROGRAM B-91

P R O P U L S I O N D A T A
PRIMARY PROPULSION CYCLE NO. 1.761
TURBOSHAFT ENGINE

2. ENGINES

BHP*P MAX. STANDARD S.L. STATIC H.P. 4500. H.P.

ENGINE SIZED FOR TAKEOFF AT T/W =1.06
H = 4000. FT, TEMPERATURE = 95.04 DEG.F.,
0.0 ENGINES INOPERATIVE, AND 0.0 FT/MIN VERTICAL RATE OF CLIMB.

AUX. INDEPENDENT PROPULSION CYCLE NO. 1.761
TURBOSHAFT ENGINE

1. ENGINES

BHP*PI MAX. STANDARD S.L. STATIC H.P. 1264. H.P.

ENGINE SIZED FOR CRUISE AT VC = 170. KNOTS,
HC = 3000. FT, TEMPERATURE = 91.50 DEG.F.
AND 0.0 ENGINES INOPERATIVE.

MAIN AND TAIL ROTOR DRIVE SYSTEM RATING 3260. H.P.

MAIN ROTOR DRIVE SYSTEM RATING 2854. H.P.

XMSN SIZED AT 100. PERCENT OF MAIN ROTOR HOVER POWER REQUIRED
AT H = 4000. FT, TEMP = 95.04 DEG.F.

TAIL ROTOR DRIVE SYSTEM RATING 406. H.P.

XMSN SIZED AT 100. PERCENT OF TAIL ROTOR HOVER POWER REQUIRED
AT H = 4000. FT, TEMP = 95.04 DEG.F.

AUXILIARY INDEPENDENT PROPULSION DRIVE SYSTEM RATING 844. H.P.

XMSN SIZED AT 100. PERCENT OF AUX. PROPULSION CRUISE POWER REQUIRED AT VC =170. KT,
HC = 3000. FT, TEMP= = 91.50 DEG.F.

H E S C O M P
HELICOPTER SIZING & PERFORMANCE COMPUTER PROGRAM B-91

A E R O D Y N A M I C S D A T A

FE	TOTAL EFFECTIVE FLATPLATE AREA	18.717	SQFT
SWET	TOTAL WETTED AREA	1120.	SQFT
CBARF	MEAN SKIN FRICTION COEFF.	0.016711	

D R A G B R E A K D O W N IN SQFT

FEW	WING FE	0.714
FEF	FUSELAGE FE	18.003
FEFP	FORWARD(MAIN) ROTOR PYLON FE	0.0
FEAP	AFT ROTOR PYLON FE	0.0
FEMRH	MAIN ROTOR HUB(S) FE	0.0
FETRH	TAIL ROTOR HUB FE	0.0
FEVT	VERTICAL TAIL FE	0.0
FEHT	HORIZONTAL TAIL FE	0.0
FEN	PRIMARY ENGINE NACELLE FE	0.0
FENI	AUX. INDEPENDENT CRUISE ENG. NAC. FE	0.0
FENS	AUX. INDPENDENT CRUISE ENG. STRUT FE	0.0
DELTA FE	INCREMENTAL FE	0.0

A E R O D Y N A M I C C O E F F .

A5		18.00330
A6		1.07465
A7		0.09420
A8		0.00013
A9		0.22171
E	WING LIFT EFFICIENCY FACTOR	0.75000
EVT	VERTICAL TAIL LIFT EFFICIENCY FACTOR	0.87709

SAMPLE CASE NO. 1

H E S C O M P

HELICOPTER SIZING & PERFORMANCE COMPUTER PROGRAM B-91

MISSION PERFORMANCE DATA

TAXI FOR 0.033 HRS. AT GROUND IDLE ENGINE RATING

TIME (HRS)	RANGE (N.M.)	FUEL USED (LBS)	WEIGHT (LBS.)	PRESS. ALT. (FT)	TAS (KTS)	PRIM. TURB. TEMP. (R)	PRIM. ENG. CODE	PRIM. ENG. PEHF	TOTAL FUEL FLOW (LBS/HR)	AUX. TURB. TEMP. (R)	AUX. ENG. CODE	AUX. ENG. PEHF	AUX. ENG. FUEL FLOW (LBS/HR)
0.0	0.0	0.0	17245.	0.	0.0	950.0	T	0.0	393.	950.0	T	0.0	86.
0.033	0.0	13.1	17232.	0.	0.0	950.0	T	0.0	393.	950.0	T	0.0	86.

TAKEOFF, HOVER, OR LAND AT T/W = 1.060 FOR 0.100 HRS.

TIME (HRS)	RANGE (N.M.)	FUEL USED (LBS)	WEIGHT (LBS.)	PRES. ALT. (FT)	TAS (KTS)	PRIM. TURB. TEMP. (R)	PRIM. ENG. CODE	PRIM. ENG. PEHF	TOTAL FUEL FLOW (LBS/HR)	THRUST TO WEIGHT	FM	BHP	CT	CT/SIGMA
M.ROTOR VTIP	M.ROTOR RHP	T.ROTOR VTIP (FPS)	T.ROTOR RHP	VRC RHP	PRIM.ENG FUEL FLOW (LBS/HR)	AUX.ENG FUEL FLOW (LBS/HR)	ROTLIM CODE			DELDCM	EMI	CPPRO	CPIND	CDO
0.033	0.0	13.1	17232.	0.	0.0	1686.4	P	0.626	1482.	1.060	0.703	2815.	0.0093	0.073
725.0	2340.	690.0	294.	0.	1395.	86.	A			0.0	0.703	0.00011	0.00079	0.0093
0.053	0.0	42.7	17202.	0.	0.0	1684.9	P	0.624	1479.	1.060	0.703	2807.	0.0093	0.073
725.0	2333.	690.0	293.	0.	1393.	86.	A			0.0	0.703	0.00011	0.00079	0.0093
0.073	0.0	72.3	17173.	0.	0.0	1683.5	P	0.622	1476.	1.060	0.703	2799.	0.0093	0.073
725.0	2327.	690.0	292.	0.	1390.	86.	A			0.0	0.703	0.00011	0.00079	0.0093
0.093	0.0	101.8	17143.	0.	0.0	1682.1	P	0.620	1473.	1.060	0.703	2791.	0.0093	0.072
725.0	2320.	690.0	290.	0.	1387.	86.	A			0.0	0.703	0.00011	0.00079	0.0093
0.113	0.0	131.3	17114.	0.	0.0	1680.7	P	0.619	1471.	1.060	0.703	2784.	0.0093	0.072
725.0	2314.	690.0	289.	0.	1384.	86.	A			0.0	0.703	0.00011	0.00078	0.0093
0.133	0.0	160.7	17084.	0.	0.0	1679.3	P	0.617	1468.	1.060	0.703	2776.	0.0092	0.072
725.0	2307.	690.0	288.	0.	1382.	86.	A			0.0	0.703	0.00011	0.00078	0.0093

CRUISE AT 170.0 KNOTS TAS, LIMITED BY NORMAL ENGINE RATING

TIME (HRS)	RANGE (N.M.)	FUEL USED (LBS)	WEIGHT (LBS.)	PRES. ALT. (FT)	TAS (KTS)	PRIM. TURB. TEMP. (R)	PRIM. ENG. CODE	PRIM. ENG. PEHF	EAS (KTS)	MU	CT PRIME OVER SIGMA	ALPHA D/L (DEG)	SPEC. RANGE (NMPP)	BHP
M.ROTOR	M.ROTOR	T.ROTOR	T.ROTOR	PROP	PRIM.ENG	BHP	ETAP		AUX. ENG.	AUX. TURB.	AUX. ENG.	AUX. ENG.		AUX. ENG. BHP

VTIP (FPS)	RHP	VTIP (FPS)	RHP	VTIP (FPS)	FUEL FLOW (LBS/HR)	AUX	PROP	TAUX/T	FUEL FLOW (LBS/HR)	TEMP.	CODE	PEHF	OR THRUST
CPPRO	CPIND	CPPAR	CPNUD	CDO	DELCDS	DELCDM	CXR	ROTLIM CODE	J	CP	CT	CLW	CDW	RN
0.133	0.0	160.7	17084.	0.	170.0	1571.5	P	0.485	170.0	0.396	0.046	-2.6	.10736	2283.
725.0	2007.	690.0	111.	----	1189.	----	0.821	0.550	395.	1679.1	P	0.619		1105.
0.000414	0.000049	0.000272	0.000042	0.01994	0.00012	0.00933	0.000522	A	----	----	----	0.500	0.007	0.682
0.222	15.00	300.4	16945.	0.	170.0	1570.0	P	0.483	170.0	0.396	0.046	-2.6	.10758	2274.
725.0	1998.	690.0	110.	----	1186.	----	0.821	0.550	395.	1678.6	P	0.619		1105.
0.000413	0.000048	0.000271	0.000042	0.01987	0.00011	0.00927	0.000522	A	----	----	----	0.500	0.007	0.680
0.310	30.00	439.9	16805.	0.	170.0	1568.4	P	0.481	170.0	0.396	0.045	-2.6	.10781	2265.
725.0	1989.	690.0	110.	----	1183.	----	0.821	0.550	394.	1678.2	P	0.618		1105.
0.000411	0.000047	0.000271	0.000041	0.01980	0.00010	0.00921	0.000521	A	----	----	----	0.500	0.007	0.677
0.398	45.00	579.0	16666.	0.	170.0	1566.9	P	0.479	170.0	0.396	0.045	-2.6	.10803	2256.
725.0	1981.	690.0	110.	----	1180.	----	0.821	0.550	394.	1677.7	P	0.617		1105.
0.000410	0.000046	0.000271	0.000041	0.01974	0.00009	0.00916	0.000521	A	----	----	----	0.500	0.007	0.674
0.486	60.00	717.8	16527.	0.	170.0	1565.3	P	0.477	170.0	0.396	0.044	-2.6	.10826	2247.
725.0	1973.	690.0	109.	----	1177.	----	0.821	0.550	394.	1677.3	P	0.617		1105.
0.000408	0.000045	0.000271	0.000040	0.01967	0.00008	0.00910	0.000520	A	----	----	----	0.500	0.007	0.672

CLIMB TO 5000. FT. WITH MAXIMUM R/C AT NORMAL ENGINE RATING
** TAS(AND EAS) IS THE HORIZONTAL COMPONENT OF THE FLIGHT PATH SPEED

TIME (HRS)	RANGE (N.M.)	FUEL USED (LBS)	WEIGHT (LBS.)	PRES. ALT. (FT)	TAS (KTS)	PRIM. TURB. TEMP. (R)	PRIM. ENG. CODE	PRIM. ENG. PEHF	EAS (KTS)	MU	CT PRIME OVER SIGMA	ALPHA D/L (DEG)	GAMMA (DEG)	BHP	R/C (FPM)
M.ROTOR VTIP (FPS)	M.ROTOR RHP	T.ROTOR VTIP (FPS)	T.ROTOR RHP	PROP VTIP (FPS)	PRIM.ENG FUEL FLOW (LBS/HR)	BHP AUX	ETAP PROP	TAUX/T	AUX. ENG. FUEL FLOW (LBS/HR)	AUX. TURB. TEMP.	AUX. ENG. CODE	AUX. ENG. PEHF	AUX. ENG. BHP OR THRUST		
CPPRO	CPIND	CPPAR	CPNUD	CDO	DELCDS	DELCDM	CXR	ROTLIM CODE	J	CP	CT	CLW	CDW	RN	
0.486	60.00	717.8	16527.	0.	76.2	1856.0	T	0.835	76.2	0.180	0.063	-3.0	7.5	1900.	1024.
725.0	1094.	690.0	48.	----	873.	----	0.820	0.0	0.	1856.0	T	0.835		0.	
0.000150	0.000202	0.000061	0.000011	0.01088	0.00000	0.00047	0.000335	A	----	----	----	0.300	0.007	0.959	
0.494	60.63	724.9	16520.	500.	76.2	1856.0	T	0.837	75.7	0.180	0.064	-3.0	7.2	1876.	982.
725.0	1096.	690.0	48.	----	861.	----	0.820	0.0	0.	1856.0	T	0.837		0.	
0.000151	0.000208	0.000061	0.000011	0.01092	0.00000	0.00051	0.000336	A	----	----	----	0.300	0.007	0.960	
0.503	61.28	732.2	16513.	1000.	77.2	1856.0	T	0.838	76.1	0.182	0.065	-3.0	6.8	1856.	946.
725.0	1097.	690.0	48.	----	851.	----	0.820	0.0	0.	1856.0	T	0.838		0.	
0.000152	0.000211	0.000064	0.000011	0.01099	0.00000	0.00057	0.000344	A	----	----	----	0.300	0.007	0.959	
0.512	61.98	739.7	16505.	1500.	77.2	1856.0	T	0.840	75.5	0.182	0.066	-2.9	6.5	1836.	910.

725.0	1101.	690.0	48.	----	840.	----	0.820	0.0	0.	1856.0	T	0.840		0.		
0.000153	0.000217	0.000064	0.000012	0.01103	0.00000	0.00062	0.000345	A	----	----	----	0.300	0.007	0.960		
0.521	62.69	747.4	16498.	2000.	77.2	1856.0	T	0.841	75.0	0.182	0.067	-2.9	6.3	1816.	872.	
725.0	1104.	690.0	48.	----	830.	----	0.820	0.0	0.	1856.0	T	0.841		0.		
0.000154	0.000224	0.000064	0.000012	0.01108	0.00001	0.00066	0.000346	A	----	----	----	0.300	0.007	0.961		
0.530	63.44	755.4	16490.	2500.	78.2	1856.0	T	0.843	75.4	0.184	0.068	-2.9	5.9	1796.	835.	
725.0	1107.	690.0	48.	----	820.	----	0.820	0.0	0.	1856.0	T	0.843		0.		
0.000155	0.000228	0.000066	0.000012	0.01117	0.00001	0.00075	0.000354	A	----	----	----	0.300	0.007	0.960		
0.540	64.23	763.5	16481.	3000.	78.2	1856.0	T	0.844	74.8	0.184	0.069	-2.9	5.7	1776.	797.	
725.0	1110.	690.0	47.	----	809.	----	0.820	0.0	0.	1856.0	T	0.844		0.		
0.000156	0.000235	0.000067	0.000013	0.01122	0.00001	0.00080	0.000355	A	----	----	----	0.300	0.007	0.961		
0.551	65.06	772.0	16473.	3500.	79.2	1856.0	T	0.846	75.2	0.187	0.070	-2.9	5.3	1756.	758.	
725.0	1114.	690.0	47.	----	799.	----	0.820	0.0	0.	1856.0	T	0.846		0.		
0.000158	0.000238	0.000069	0.000013	0.01132	0.00001	0.00089	0.000364	A	----	----	----	0.300	0.007	0.960		
0.562	65.94	780.8	16464.	4000.	79.2	1856.0	T	0.847	74.7	0.187	0.071	-2.8	5.1	1736.	720.	
725.0	1117.	690.0	47.	----	789.	----	0.820	0.0	0.	1856.0	T	0.847		0.		
0.000159	0.000246	0.000069	0.000013	0.01138	0.00002	0.00095	0.000365	A	----	----	----	0.300	0.007	0.961		
0.573	66.87	789.9	16455.	4500.	79.2	1856.0	T	0.849	74.1	0.187	0.072	-2.8	4.8	1716.	680.	
725.0	1121.	690.0	47.	----	779.	----	0.820	0.0	0.	1856.0	T	0.849		0.		
0.000160	0.000253	0.000069	0.000013	0.01145	0.00002	0.00102	0.000366	A	----	----	----	0.300	0.007	0.961		
0.586	67.86	799.5	16445.	5000.	80.2	1856.0	T	0.850	74.5	0.189	0.073	-2.8	4.4	1695.	640.	
725.0	1125.	690.0	47.	----	769.	----	0.820	0.0	0.	1856.0	T	0.850		0.		
0.000162	0.000258	0.000072	0.000014	0.01158	0.00003	0.00113	0.000374	A	----	----	----	0.300	0.007	0.961		

CRUISE AT SPEED FOR 99 PER CENT BEST RANGE WITH HEADWIND OF 0.0 KNOTS

TIME (HRS)	RANGE (N.M.)	FUEL USED (LBS)	WEIGHT (LBS.)	PRES. ALT. (FT)	TAS (KTS)	PRIM. TURB. TEMP. (R)	PRIM. ENG. CODE	PRIM. ENG. PEHF	EAS (KTS)	MU	CT PRIME OVER SIGMA	ALPHA D/L (DEG)	SPEC. RANGE (NMPP)	BHP
M.ROTOR VTIP (FPS)	M.ROTOR RHP	T.ROTOR VTIP (FPS)	T.ROTOR RHP	PROP VTIP (FPS)	PRIM.ENG FUEL FLOW (LBS/HR)	BHP AUX	ETAP PROP	TAUX/T	AUX. ENG. FUEL FLOW (LBS/HR)	AUX. TURB. TEMP.	AUX. ENG. CODE	AUX. ENG. PEHF		AUX. ENG. BHP OR THRUST
CPPRO	CPIND	CPPAR	CPNUD	CDO	DELCDS	DELCDM	CXR	ROTLIM CODE	J	CP	CT	CLW	CDW	RN
0.586	67.86	799.5	16445.	5000.	153.6	1507.8	P	0.434	142.6	0.358	0.058	-2.2	.12308	1782.
725.0	1548.	690.0	84.	----	952.	----	0.825	0.600	297.	1569.8	P	0.510		588.
0.000383	0.000086	0.000170	0.000056	0.02000	0.00024	0.00927	0.000394	A	----	----	----	-0.500	0.007	0.768
0.683	82.86	921.3	16324.	5000.	153.1	1504.0	P	0.430	142.1	0.356	0.058	-2.2	.12350	1763.
725.0	1530.	690.0	83.	----	946.	----	0.825	0.600	295.	1565.8	P	0.505		582.
0.000379	0.000085	0.000168	0.000056	0.01983	0.00022	0.00912	0.000391	A	----	----	----	0.500	0.007	0.768
0.781	97.86	1042.8	16202.	5000.	153.1	1502.2	P	0.428	142.1	0.356	0.057	-2.2	.12381	1754.
725.0	1522.	690.0	82.	----	943.	----	0.825	0.600	294.	1565.3	P	0.505		581.
0.000377	0.000083	0.000168	0.000055	0.01976	0.00020	0.00906	0.000391	A	----	----	----	0.500	0.007	0.766

0.979	112.86	1164.0	16081.	5000.	153.1	1500.4	P	0.425	142.1	0.356	0.057	-2.2	.12412	1745.
725.0	1514.	690.0	82.	----	940.	----	0.825	0.600	294.	1564.9	P	0.504		581.
0.000376	0.000082	0.000168	0.000054	0.01969	0.00019	0.00901	0.000390	A	----	----	----	0.500	0.007	0.764
0.977	127.86	1284.8	15960.	5000.	153.1	1498.7	P	0.423	142.1	0.356	0.056	-2.2	.12443	1736.
725.0	1506.	690.0	82.	----	937.	----	0.825	0.600	294.	1564.4	P	0.504		580.
0.000375	0.000080	0.000168	0.000054	0.01962	0.00018	0.00895	0.000390	A	----	----	----	0.500	0.007	0.762
1.075	142.86	1405.4	15840.	5000.	153.1	1497.0	P	0.421	142.1	0.356	0.056	-2.2	.12474	1728.
725.0	1497.	690.0	81.	----	934.	----	0.825	0.600	294.	1564.0	P	0.503		579.
0.000373	0.000079	0.000168	0.000053	0.01955	0.00016	0.00889	0.000390	A	----	----	----	0.500	0.007	0.761
1.122	150.00	1462.6	15782.	5000.	153.1	1496.2	P	0.420	142.1	0.356	0.055	-2.2	.12488	1724.
725.0	1494.	690.0	81.	----	933.	----	0.825	0.600	294.	1563.8	P	0.503		579.
0.000373	0.000078	0.000167	0.000053	0.01952	0.00016	0.00887	0.000389	A	----	----	----	0.500	0.007	0.760

TRANSFER ALTITUDE TO 1000. FT.

TIME (HRS)	RANGE (N.M.)	FUEL USED (LBS)	WEIGHT (LBS.)	PRES. ALT. (FT)
1.122	150.00	1462.6	15782.	5000.
1.122	150.00	1462.6	15782.	1000.

TAKEOFF, HOVER, OR LAND AT T/W = 1.060 FOR 0.200 HRS.

TIME (HRS)	RANGE (N.M.)	FUEL USED (LBS)	WEIGHT (LBS.)	PRES. ALT. (FT)	TAS (KTS)	PRIM. TURB. TEMP. (R)	PRIM. ENG. CODE	PRIM. ENG. PEHF	TOTAL FUEL FLOW (LBS/HR)	THRUST TO WEIGHT	FM	BHP	CT	CT/SIGMA
M.ROTOR VTIP	M.ROTOR RHP	T.ROTOR VTIP (FPS)	T.ROTOR RHP	VRC RHP	PRIM.ENG FUEL FLOW (LBS/HR)	AUX.ENG FUEL FLOW (LBS/HR)	ROTLIM CODE			DELDCM	FMI	CPPRO	CPIND	CDO
1.122	150.00	1462.6	15782.	1000.	0.0	1635.9	P	0.568	1352.	1.060	0.706	2492.	0.0088	0.069
725.0	2070.	690.0	250.	0.	1268.	84.	A			0.0	0.706	0.00011	0.00071	0.0093
1.142	150.00	1489.7	15755.	1000.	0.0	1634.7	P	0.566	1350.	1.060	0.706	2485.	0.0088	0.069
725.0	2065.	690.0	249.	0.	1266.	84.	A			0.0	0.706	0.00011	0.00071	0.0093
1.162	150.00	1516.7	15728.	1000.	0.0	1633.5	P	0.565	1348.	1.060	0.706	2478.	0.0088	0.068
725.0	2059.	690.0	248.	0.	1264.	84.	A			0.0	0.706	0.00011	0.00071	0.0093
1.182	150.00	1543.6	15701.	1000.	0.0	1632.3	P	0.563	1345.	1.060	0.707	2472.	0.0088	0.068
725.0	2054.	690.0	247.	0.	1261.	84.	A			0.0	0.707	0.00011	0.00071	0.0093
1.202	150.00	1570.5	15674.	1000.	0.0	1631.1	P	0.562	1343.	1.060	0.707	2465.	0.0087	0.068
725.0	2048.	690.0	246.	0.	1259.	84.	A			0.0	0.707	0.00011	0.00071	0.0093
1.222	150.00	1597.4	15648.	1000.	0.0	1629.8	P	0.560	1341.	1.060	0.707	2459.	0.0087	0.068
725.0	2043.	690.0	245.	0.	1257.	84.	A			0.0	0.707	0.00011	0.00070	0.0093
1.242	150.00	1624.2	15621.	1000.	0.0	1628.7	P	0.559	1339.	1.060	0.707	2452.	0.0087	0.068
725.0	2037.	690.0	244.	0.	1255.	84.	A			0.0	0.707	0.00011	0.00070	0.0093
1.262	150.00	1651.0	15594.	1000.	0.0	1627.5	P	0.557	1337.	1.060	0.707	2446.	0.0087	0.068
725.0	2032.	690.0	243.	0.	1252.	84.	A			0.0	0.707	0.00011	0.00070	0.0093

1.292	150.00	1677.7	15567.	1000.	0.0	1626.3	P	0.556	1334.	1.060	0.707	2439.	0.0087	0.068
725.0	2027.	690.0	243.	0.	1250.	84.	A			0.0	0.707	0.00011	0.00070	0.0093
1.302	150.00	1704.4	15541.	1000.	0.0	1625.1	P	0.554	1332.	1.060	0.707	2433.	0.0087	0.068
725.0	2021.	690.0	242.	0.	1248.	84.	A			0.0	0.707	0.00011	0.00069	0.0093
1.322	150.00	1731.0	15514.	1000.	0.0	1623.9	P	0.553	1330.	1.060	0.707	2426.	0.0086	0.067
725.0	2016.	690.0	241.	0.	1246.	84.	A			0.0	0.707	0.00011	0.00069	0.0093
1.322	150.00	1731.1	15514.	1000.	0.0	1623.9	P	0.553	1330.	1.060	0.707	2426.	0.0086	0.067
725.0	2016.	690.0	241.	0.	1246.	84.	A			0.0	0.707	0.00011	0.00069	0.0093

CHANGE PAYLOAD. REMOVE 1000. LB.

TIME (HRS)	RANGE (N.M.)	FUEL USED (LBS)	WEIGHT (LBS.)	PRES. ALT. (FT)
1.322	150.00	1731.1	15514.	1000.
1.332	150.00	1731.1	14514.	1000.

LOITER FOR 0.500 HRS.

TIME (HRS)	RANGE (N.M.)	FUEL USED (LBS)	WEIGHT (LBS.)	PRES. ALT. (FT)	TAS (KTS)	PRIM. TURB. TEMP. (R)	PRIM. ENG. CODE	PRIM. ENG. PEHF	EAS (KTS)	MU	CT PRIME OVER SIGMA	ALPHA D/L (DEG)	TOTAL FUEL FLOW (LBS/HR)	BHP
M.ROTOR VTIP (FPS)	M.ROTOR RHP	T.ROTOR VTIP (FPS)	T.ROTOR RHP	PROP VTIP (FPS)	PRIM.ENG FUEL FLOW (LBS/HR)	BHP AUX	ETAP PROP	TAUX/T	AUX. ENG. FUEL FLOW (LBS/HR)	AUX. TURB. TEMP.	AUX. ENG. CODE	AUX. ENG. PEHF		AUX. ENG. BHP OR THRUST
CPPRO	CPIND	CPPAR	CPNUD	CDO	DELCDS	DELCDM	CXR	ROTLIM CODE	J	CP	CT	CLW	CDW	RN
1.332	150.00	1731.1	14514.	1000.	76.6	1373.1	P	0.238	75.5	0.178	0.056	-2.0	941.	1054.
725.0	884.	690.0	42.	----	788.	----	0.838	0.350	153.	1208.9	P	0.045		56.
0.000149	0.000159	0.000034	0.000009	0.01083	0.0	0.00041	0.000189	A	----	----	----	0.400	0.007	0.941
1.332	150.00	1778.1	14467.	1000.	76.6	1372.5	P	0.237	75.5	0.178	0.056	-2.0	940.	1051.
725.0	881.	690.0	42.	----	787.	----	0.838	0.350	153.	1208.9	P	0.045		56.
0.000149	0.000158	0.000034	0.000009	0.01083	0.0	0.00041	0.000189	A	----	----	----	0.400	0.007	0.941
1.432	150.00	1825.1	14420.	1000.	76.6	1371.9	P	0.237	75.5	0.178	0.056	-2.0	939.	1048.
725.0	878.	690.0	42.	----	786.	----	0.838	0.350	153.	1208.8	P	0.045		56.
0.000149	0.000157	0.000034	0.000009	0.01083	0.0	0.00041	0.000189	A	----	----	----	0.400	0.007	0.941
1.482	150.00	1872.1	14373.	1000.	76.6	1371.3	P	0.236	75.5	0.178	0.056	-2.1	938.	1045.
725.0	875.	690.0	42.	----	785.	----	0.838	0.350	153.	1208.8	P	0.045		56.
0.000149	0.000156	0.000034	0.000009	0.01083	0.0	0.00040	0.000189	A	----	----	----	0.400	0.007	0.940
1.532	150.00	1919.0	14326.	1000.	76.6	1370.7	P	0.235	75.5	0.178	0.055	-2.1	937.	1042.
725.0	872.	690.0	42.	----	784.	----	0.838	0.350	153.	1208.8	P	0.045		56.
0.000149	0.000155	0.000034	0.000009	0.01083	0.0	0.00040	0.000188	A	----	----	----	0.400	0.007	0.940
1.582	150.00	1965.8	14279.	1000.	76.6	1370.2	P	0.235	75.5	0.178	0.055	-2.1	936.	1039.

725.0	869.	690.0	42.	----	783.	----	0.838	0.350	153.	1208.7	P	0.045			56.
0.000149	0.000154	0.000034	0.000009	0.01083	0.0	0.00040	0.000188	A	----	----	----	0.400		0.007	0.940
1.632	150.00	2012.6	14232.	1000.	76.6	1369.6	P	0.234	75.5	0.178	0.055	-2.1		935.	1035.
725.0	866.	690.0	42.	----	782.	----	0.838	0.350	153.	1208.7	P	0.045			56.
0.000149	0.000153	0.000034	0.000009	0.01082	0.0	0.00040	0.000188	A	----	----	----	0.400		0.007	0.940
1.682	150.00	2059.4	14185.	1000.	76.6	1369.0	P	0.233	75.5	0.178	0.055	-2.1		934.	1032.
725.0	863.	690.0	42.	----	781.	----	0.838	0.350	153.	1208.6	P	0.045			56.
0.000149	0.000152	0.000034	0.000009	0.01082	0.0	0.00040	0.000188	A	----	----	----	0.400		0.007	0.940
1.732	150.00	2106.1	14139.	1000.	76.6	1368.4	P	0.232	75.5	0.178	0.055	-2.1		933.	1029.
725.0	860.	690.0	41.	----	780.	----	0.838	0.350	153.	1208.6	P	0.045			56.
0.000149	0.000151	0.000034	0.000009	0.01082	0.0	0.00039	0.000188	A	----	----	----	0.400		0.007	0.939
1.782	150.00	2152.8	14092.	1000.	75.6	1368.1	P	0.232	74.5	0.176	0.055	-2.0		932.	1027.
725.0	858.	690.0	41.	----	780.	----	0.839	0.350	153.	1207.4	P	0.043			54.
0.000148	0.000152	0.000033	0.000009	0.01079	0.0	0.00037	0.000184	A	----	----	----	0.400		0.007	0.941
1.832	150.00	2199.4	14045.	1000.	75.6	1367.5	P	0.231	74.5	0.176	0.054	-2.0		931.	1024.
725.0	855.	690.0	41.	----	779.	----	0.839	0.350	153.	1207.4	P	0.043			54.
0.000148	0.000151	0.000033	0.000009	0.01079	0.0	0.00037	0.000184	A	----	----	----	0.400		0.007	0.941

CLIMB TO 3000. FT. WITH MAXIMUM R/C AT NORMAL ENGINE RATING
** TAS(AND EAS) IS THE HORIZONTAL COMPONENT OF THE FLIGHT PATH SPEED

TIME (HRS)	RANGE (N.M.)	FUEL USED (LBS)	WEIGHT (LBS.)	PRES. ALT. (FT)	TAS (KTS)	PRIM. TURB. TEMP. (R)	PRIM. ENG. CODE	PRIM. ENG. PEHF	EAS (KTS)	MU	CT PRIME OVER SIGMA	ALPHA D/L (DEG)	GAMMA (DEG)	BHP	R/C (FPM)
M.ROTOR VTIP (FPS)	M.ROTOR RHP	T.ROTOR VTIP (FPS)	T.ROTOR RHP	PROP VTIP (FPS)	PRIM.ENG FUEL FLOW (LBS/HR)	BHP AUX	ETAP PROP	TAUX/T	AUX. ENG. FUEL FLOW (LBS/HR)	AUX. TURB. TEMP.	AUX. ENG. CODE	AUX. ENG. PEHF	AUX. ENG. BHP OR THRUST		
CPPRO	CPIND	CPPAR	CPNUD	CDO	DELCDS	DELCDM	CXR	ROTLIM CODE	J	CP	CT	CLW	CDW	RN	
1.832	150.00	2199.4	14045.	1000.	71.3	1856.0	T	0.838	70.3	0.168	0.055	-3.3	11.4	1856.	1475.
725.0	922.	690.0	43.	----	851.	----	0.820	0.0	0.	1856.0	T	0.838		0.	
0.000146	0.000160	0.000054	0.000008	0.01071	0.0	0.00030	0.000320	A	----	----	----	0.400	0.007	0.946	
1.838	150.41	2204.2	14041.	1500.	71.3	1856.0	T	0.840	69.8	0.168	0.056	-3.3	11.0	1833.	1431.
725.0	923.	690.0	43.	----	840.	----	0.820	0.0	0.	1856.0	T	0.840		0.	
0.000146	0.000165	0.000055	0.000008	0.01073	0.0	0.00032	0.000322	A	----	----	----	0.400	0.007	0.946	
1.843	150.83	2209.1	14036.	2000.	71.3	1856.0	T	0.841	69.3	0.168	0.056	-3.2	10.7	1813.	1391.
725.0	923.	690.0	43.	----	829.	----	0.820	0.0	0.	1856.0	T	-0.841		0.	
0.000146	0.000170	0.000055	0.000008	0.01076	0.0	0.00035	0.000323	A	----	----	----	0.400	0.007	0.947	
1.849	151.26	2214.1	14031.	2500.	72.3	1856.0	T	0.843	69.7	0.171	0.057	-3.2	10.3	1793.	1351.
725.0	924.	690.0	42.	----	819.	----	0.820	0.0	0.	1856.0	T	0.843		0.	
0.000147	0.000172	0.000057	0.000009	0.01081	0.0	0.00040	0.000331	A	----	----	----	0.400	0.007	0.947	
1.856	151.72	2219.1	14026.	3000.	72.3	1856.0	T	0.844	69.2	0.171	0.058	-3.2	10.0	1773.	1311.
725.0	925.	690.0	42.	----	809.	----	0.820	0.0	0.	1856.0	T	0.844		0.	

0.000148	0.000178	0.000057	0.000009	0.01084	0.0	0.00043	0.000332	A	----	----	----	0.400	0.007	0.947	

CRUISE AT SPEED FOR 99 PER CENT BEST RANGE WITH HEADWIND OF 0.0 KNOTS

TIME (HRS)	RANGE (N.M.)	FUEL USED (LBS)	WEIGHT (LBS.)	PRES. ALT. (FT)	TAS (KTS)	PRIM. TURB. TEMP. (R)	PRIM. ENG. CODE	PRIM. ENG. PEHF	EAS (KTS)	MU	CT PRIME OVER SIGMA	ALPHA D/L (DEG)	SPEC. RANGE (NMPP)	BHP
M.ROTOR VTIP (FPS)	M.ROTOR RHP	T.ROTOR VTIP (FPS)	T.ROTOR RHP	PROP VTIP (FPS)	PRIM.ENG FUEL FLOW (LBS/HR)	BHP AUX	ETAP PROP	TAUX/T	AUX. ENG. FUEL FLOW (LBS/HR)	AUX. TURB. TEMP.	AUX. ENG. CODE	AUX. ENG. PEHF		AUX. ENG. BHP OR THRUST
CPPRO	CPIND	CPPAR	CPNUD	CDO	DELCDS	DELCDM	CXR	ROTLIM CODE	J	CP	CT	CLW	CDW	RN
1.856	151.72	2219.1	14026.	3000.	154.1	1451.4	P	0.353	147.4	0.359	0.043	-2.0	.12384	1527.
725.0	1308.	690.0	76.	----	898.	----	0.825	0.700	348.	1642.1	P	0.588		714.
0.000339	0.000047	0.000126	0.000042	0.01764	0.00001	0.00714	0.000289	A	----	----	----	0.500	0.007	0.709
1.953	166.72	2340.2	13905.	3000.	154.1	1450.1	P	0.351	147.4	0.359	0.043	-2.0	.12408	1520.
725.0	1302.	690.0	76.	----	896.	----	0.825	0.700	347.	1641.6	P	0.587		714.
0.000338	0.000046	0.000125	0.000041	0.01760	0.00001	0.00709	0.000289	A	----	----	----	0.500	0.007	0.707
2.050	181.72	2461.1	13784.	3000.	154.1	1448.9	P	0.350	147.4	0.359	0.042	-2.0	.12432	1513.
725.0	1295.	690.0	76.	----	893.	----	0.825	0.700	347.	1641.2	P	0.587		713.
0.000337	0.000045	0.000125	0.000041	0.01755	0.00001	0.00705	0.000288	A	----	----	----	0.500	0.007	0.704
2.148	196.72	2581.8	13663.	3000.	154.1	1447.6	P	0.348	147.4	0.359	0.042	-2.0	.12456	1507.
725.0	1289.	690.0	75.	----	891.	----	0.825	0.700	347.	1640.7	P	0.586		712.
0.000336	0.000044	0.000125	0.000040	0.01750	0.00001	0.00700	0.000288	A	----	----	----	0.500	0.007	0.701
2.245	211.72	2702.2	13543.	3000.	154.1	1446.4	P	0.347	147.4	0.359	0.041	-2.0	.12479	1500.
725.0	1283.	690.0	75.	----	889.	----	0.825	0.700	347.	1640.2	P	0.586		711.
0.000335	0.000043	0.000125	0.000040	0.01746	0.00000	0.00696	0.000288	A	----	----	----	0.500	0.007	0.699
2.342	226.72	2822.4	13422.	3000.	154.1	1445.2	P	0.345	147.4	0.359	0.041	-2.0	.12503	1494.
725.0	1277.	690.0	75.	----	887.	----	0.825	0.700	346.	1639.7	P	0.585		711.
0.000334	0.000042	0.000125	0.000039	0.01741	0.00000	0.00691	0.000287	A	----	----	----	0.500	0.007	0.696
2.440	241.72	2942.4	13302.	3000.	154.1	1444.0	P	0.344	147.4	0.359	0.040	-2.0	.12526	1487.
725.0	1271.	690.0	75.	----	885.	----	0.825	0.700	346.	1639.2	P	0.584		710.
0.000333	0.000041	0.000125	0.000039	0.01737	0.00000	0.00687	0.000287	A	----	----	----	0.500	0.007	0.693
2.537	256.72	3062.1	13183.	3000.	154.1	1442.8	P	0.342	147.4	0.359	0.040	-2.0	.12549	1481.
725.0	1265.	690.0	75.	----	883.	----	0.825	0.700	346.	1638.7	P	0.584		709.
0.000333	0.000040	0.000125	0.000038	0.01732	0.00000	0.00683	0.000287	A	----	----	----	0.500	0.007	0.690
2.634	271.72	3181.7	13063.	3000.	154.1	1441.6	P	0.341	147.4	0.359	0.039	-2.0	.12572	1474.
725.0	1259.	690.0	74.	----	881.	----	0.825	0.700	346.	1638.3	P	0.583		709.
0.000332	0.000038	0.000125	0.000038	0.01728	0.00000	0.00678	0.000287	A	----	----	----	0.500	0.007	0.688
2.732	286.72	3301.0	12944.	3000.	154.1	1440.5	P	0.339	147.4	0.359	0.039	-2.1	.12595	1468.
725.0	1253.	690.0	74.	----	879.	----	0.825	0.700	345.	1637.8	P	0.583		708.
0.000331	0.000037	0.000124	0.000037	0.01723	0.00000	0.00674	0.000286	A	----	----	----	0.500	0.007	0.685

2.818	300.00	3406.4	12838.	3000.	154.1	1439.5	P	0.338	147.4	0.359	0.038	-2.1	.12616	1463.
725.0	1248.	690.0	74.	----	877.	----	0.825	0.700	345.	1637.3	P	0.582		707.
0.000330	0.000037	0.000124	0.000037	0.01720	0.00000	0.00670	0.000286	A	----	----	----	0.500	0.007	0.682

LOITER FOR 0.250 HRS. FOR RESERVE FUEL

TIME (HRS)	RANGE (N.M.)	FUEL USED (LBS)	WEIGHT (LBS.)	PRES. ALT. (FT)	TAS (KTS)	PRIM. TURB. TEMP. (R)	PRIM. ENG. CODE	PRIM. ENG. PEHF	EAS (KTS)	MU	CT PRIME OVER SIGMA	ALPHA D/L (DEG)	TOTAL FUEL FLOW (LBS/HR)	BHP
M.ROTOR VTIP (FPS)	M.ROTOR RHP	T.ROTOR VTIP (FPS)	T.ROTOR RHP	PROP VTIP (FPS)	PRIM.ENG FUEL FLOW (LBS/HR)	BHP AUX	ETAP PROP	TAUX/T	AUX. ENG. FUEL FLOW (LBS/HR)	AUX. TURB. TEMP.	AUX. ENG. CODE	AUX. ENG. PEHF		AUX. ENG. BHP OR THRUST
CPPRO	CPIND	CPPAR	CPNUD	CDO	DELCDS	DELCDM	CXR	ROTLIM CODE	J	CP	CT	CLW	CDW	RN
2.819	300.00	3406.4	12838.	3000.	74.1	1360.3	P	0.236	70.9	0.173	0.053	-3.0	813.	990.
725.0	824.	690.0	39.	----	736.	----	0.839	0.0	77.	930.4	P	0.0		0.
0.000148	0.000145	0.000048	0.000008	0.01082	0.0	0.00039	0.000272	A	----	----	----	0.400	0.007	0.941
2.868	300.00	3447.1	12798.	3000.	74.1	1359.8	P	0.235	70.9	0.173	0.053	-3.0	812.	988.
725.0	822.	690.0	39.	----	735.	----	0.839	0.0	77.	930.4	P	0.0		0.
0.000148	0.000144	0.000047	0.000008	0.01081	0.0	0.00039	0.000272	A	----	----	----	0.400	0.007	0.941
2.918	300.00	3487.6	12757.	3000.	74.1	1359.3	P	0.234	70.9	0.173	0.052	-3.0	811.	985.
725.0	819.	690.0	39.	----	734.	----	0.839	0.0	77.	930.4	P	0.0		0.
0.000148	0.000143	0.000047	0.000008	0.01081	0.0	0.00039	0.000272	A	----	----	----	0.400	0.007	0.941
2.968	300.00	3528.2	12717.	3000.	74.1	1358.7	P	0.234	70.9	0.173	0.052	-3.0	810.	982.
725.0	816.	690.0	39.	----	734.	----	0.839	0.0	77.	930.4	P	0.0		0.
0.000148	0.000142	0.000047	0.000008	0.01081	0.0	0.00039	0.000272	A	----	----	----	0.400	0.007	0.941
3.018	300.00	3568.7	12676.	3000.	74.1	1358.2	P	0.233	70.9	0.173	0.052	-3.0	809.	980.
725.0	814.	690.0	39.	----	733.	----	0.839	0.0	77.	930.4	P	0.0		0.
0.000148	0.000141	0.000047	0.000008	0.01081	0.0	0.00039	0.000271	A	----	----	----	0.400	0.007	0.940
3.068	300.00	3609.2	12636.	3000.	74.1	1357.7	P	0.232	70.9	0.173	0.052	-3.0	809.	977.
725.0	811.	690.0	39.	----	732.	----	0.839	0.0	77.	930.4	P	0.0		0.
0.000148	0.000140	0.000047	0.000008	0.01081	0.0	0.00038	0.000271	A	----	----	----	0.400	0.007	0.940

```
          MISSION FUEL REQUIRED =  3406.41
          RESERVE FUEL REQUIRED =   202.77
          TOTAL   FUEL REQUIRED =  3609.18

**********************************************************************************************************

END  OF  SUCCESSFUL  CASE

**********************************************************************************************************
```

7.6.2 Tandem Rotor Winged Helicopter

The design mission profile is illustrated in Figure 7-6. The more interesting and unusual inputs are discussed for this case, while the more routine information is only listed. A complete copy of the program printout follows the description of the input.

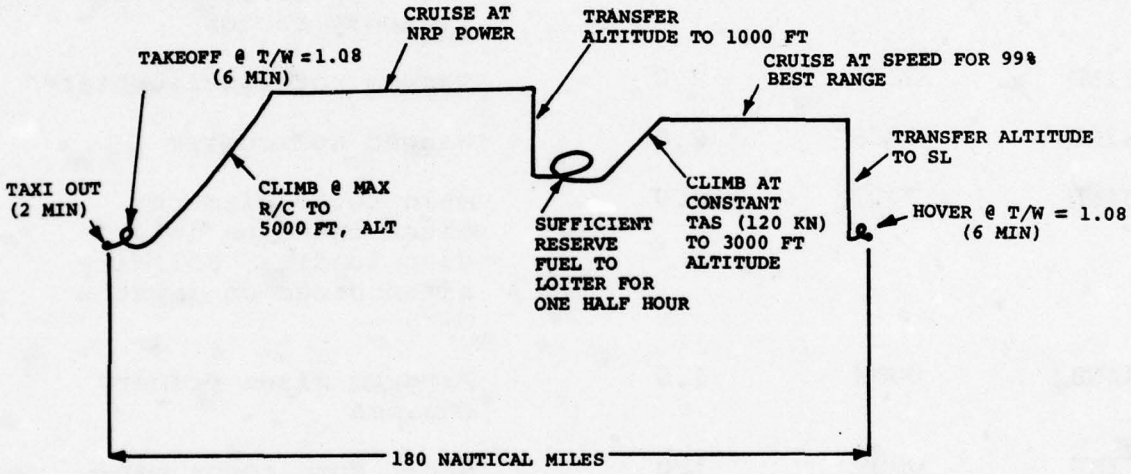

Figure 7-6. Design MSN - Sample Case Number 2

SAMPLE CASE NO. 2

GENERAL INFORMATION SHEET

VARIABLE	LOCATION	VALUE ASSIGNED	REMARKS
OPTIND	0001	1.0	Sizing run
OPTIONAL PRINT	0002	1.0	Detailed printout desired
DRGIND	0003	1.0	Component drag build-up desired
OSWIND	0004	0	User inputs Oswald efficiency factor
CNFIND	0005	2.0	Tandem rotor helicopter
AUXIND	0006	2.0	Winged helicopter
RDMIND	0007	4.0	Main rotor diameter sized based on input disc loading; solidity sized based on input C_T/σ
FIXIND	0008	1.0	Program sizes primary engines
ROTIND	0009	1.0	Short form rotor performance method used
S_WIND	0010	3.0	Wing area sized by maneuver conditions
b_WIND	0011	2.0	Wing span sized by input aspect ratio
AIPIND	0012	1.0	No independent aux. engines
FDMIND	0020	2.0	Tandem rotor fuselage sized by input of ℓ_C and ((O/L)/D)
APHIND	0021	2.0	Aft rotor pylon geometry calculated based on input rotor gap/ stagger ratio

VARIABLE	LOCATION	VALUE ASSIGNED	REMARKS
ESCIND	0022	2.0	Primary engines sized for either takeoff or cruise
WG_o	0023	30000	First guess at design gross weight
h_o	0024	0	Start altitude — Normally 0 except for partial mission analysis
R_o	0025	0	Starting range — Normally 0 except for partial mission analysis
t_o	0026	0	Starting time — Normally 0 except for partial mission analysis
h_{OPT}IND	0027	0	Cruise at specified altitudes
M_{MO}	0028	0.32	Maximum operating Mach number
V_{MO}	0029	200	Maximum operating EAS knots
V_{DIVE}	0030	200	Design dive speed, knots EAS
M_{LF}	0031	3.0	Maneuver load factor
K_1	0032	1.0	Factor on mission fuel burned to give reserve fuel; i.e., 1.1 would give 10 percent reserves
δ_{Wf}	0033	0.0	Fixed fuel increment for reserves or other use
K_{FF}	0034	1.05	Increase basic engine SFC by 5 percent

VARIABLE	LOCATION	VALUE ASSIGNED	REMARKS	
SGTIND	0035	1.0	Taxi	Sequence of Design Mission
	0036	2.0	Takeoff	
	0037	3.0	Climb	
	0038	4.0	Cruise	
	0039	9.0	Transfer altitude	
	0040	60.0	Loiter (reserve fuel)	
	0041	3.0	Climb	
	0042	4.0	Cruise	
	0043	9.0	Transfer altitude	
	0044	2.0	Hover and land	
	0045	100	End of case	

HELICOPTER DIMENSIONAL INFORMATION SHEET

AR	0104	6.0	Wing aspect ratio (input because b_WIND = 2.0)
$(t/c)_R$	0105	0.20	Wing root thickness/ chord ratio
$(t/c)_T$	0106	0.12	Wing tip thickness/ chord ratio
$\Lambda c/4$	0107	0	Quarter-chord mean sweep angle, degrees
λ	0108	0.5	Wing taper ratio
C_F/C	0109	1.0	Ratio of download alleviating flap chord to wing chord (1.0 signifies a fully tilting wing)

VARIABLE	LOCATION	VALUE ASSIGNED	REMARKS
h'/h_F	0110	1.0	Wing located at top of fuselage
C_{L_D}	0111	1.2	Wing design lift coefficient
h_F	0122	7.0	Fuselage height
W_F	0123	6.5	Fuselage width
$(\ell/d)_P$	0124	0.70	Fineness ratio of nose
$(\ell/d)_T$	0125	1.2	Fineness ratio of tail
ℓ_c	0126	35.0	Constant diameter section length
ℓ_{RW}	0127	5.0	Length of ramp well
((O/L)/D)	0132	0.22	Tandem rotor overlap/diameter ratio
Z_1	0142	0.035	Primary engine nacelle constants
Z_2	0143	2.0	
Z_3	0144	0.078	
$(t/c)_{R_F}$	0152	0.45	Forward rotor pylon root thickness/chord ratio
$(t/c)_{T_F}$	0153	0.25	Forward rotor pylon tip thickness/chord ratio
AR_{FP}	0154	0.4	Forward rotor pylon aspect ratio
FP	0155	0.7	Forward rotor pylon taper ratio
h_{P_1}	0156	3.0	Forward rotor pylon height
$(t/c)_{R_A}$	0157	0.50	Aft rotor pylon root thickness/chord ratio
$(t/c)_{T_A}$	0158	0.30	Aft rotor pylon tip thickness/chord ratio

VARIABLE	LOCATION	VALUE ASSIGNED	REMARKS
AR_{AP}	0159	0.7	Aft rotor pylon aspect ratio
λ_{AP}	0160	0.75	Aft rotor pylon taper ratio
g/s	0162	0.16	Tandem rotor gap/stagger ratio (input because APHIND = 2.0)
MAIN ROTOR DIMENSIONAL DATA SHEET			
ROTOR CYCLE NO.	0171	3.0	Rotor blade section aerodynamic characteristics selection
N_R	0172	2.0	No. of rotors
W/A	0173	8.0	Disc loading
b_{MR}	0176	4.0	No. of blades/main rotor
$\theta_{T_{MR}}$	0177	-9.0	Main rotor twist (deg)
$X_{C_{MR}}$	0178	0.2	Main rotor blade cutout as a fraction of radius
X_{MR}	0179	0.075	Main rotor blade attachment point as a fraction of radius
$(t/c)_{.25R}$	0180	0.12	Rotor blade thickness/chord at 25 percent radius
V_{TIP}	0181	700	Main rotor tip speed
$(C_T/\sigma)_H$	0182	0.12	Rotor "lift coefficient" for hover sizing rotor solidity
T/W	0183	1.08	Rotor design thrust/weight ratio

VARIABLE	LOCATION	VALUE ASSIGNED	REMARKS
$V_{KT}(c)$	0184	160	Cruise flight conditions for sizing rotor solidity
$h_c(c)$	0185	4000	
ΔT_{IN_C}	0186	0	
$(C_T/\sigma)_{CR}$	0187	0.095	Rotor "lift coefficient" for sizing rotor solidity in cruise flight
g REQM'T	0188	2.0	Total g requirement helicopter must satisfy at $V_{KT}(c)$
g(ROTOR)	0189	1.5	Maneuver g's carried by main rotor at $V_{KT}(c)$
N (ROTOR LOADING)	0190	1.0	Rotor lift/GW for lg cruise flight rotor solidity sizing
V_{CEH1}	0191	1.53	Main rotor vertical rate-of-climb efficiency factors
V_{CEH2}	0192	0.0	
$K_{P_{CLIMB}}$	0193	0.85	Helicopter forward flight climb efficiency

PRIMARY ENGINE SIZING INFORMATION SHEET

PRIMARY ENGINE CYCLE NO.	0217	1.761	Engine selection
N_P	0219	4.0	No. of primary engines
XMSNIND	0220	2.0	Drive system rated at power required to hover or cruise (more critical of the two conditions selected by program)
SHP_{MRX}/SHP^*_{MR}	0221	1.00	Main rotor drive system is rated at 100 percent of main rotor design power
η_T	0223	0.97	Transmission efficiency

VARIABLE	LOCATION	VALUE ASSIGNED	REMARKS
ΔSHP_{ACC}	0224	100	Accessory power losses
$h_{TO}(H)$	0227	4000	Design point hover altitude (engine sizing)
$(T/W)_D$	0228	1.08	Configuration design point hover thrust/ weight ratio
$(N_{II}/N_{II_{MAX}})_{TO}$	0230	1.105	Main rotor operating at 100 percent of hover tip speed (700 fps); i.e. $\left(\frac{N_{II}}{N_{II_{MAX}}}\right)_{TO}\left(\frac{N_{II_{MAX}}}{N_{II}^*}\right) V_T$ $= \frac{(1.105)(.905)}{1.00}(700)$ $= 700$
$N_{P_{SD}}$	0231	1.0	One engine inoperative at hover design point conditions
SHP_E/SHP^*	0232	0.95	Engines sized to permit operation in hover (OGE) with one engine out and the remaining engines operating at 95 percent max rated power
h_c	0235	3000	Design point (cruise) altitude (engine sizing)
V_c	0236	155	Design point cruise speed (engine sizing)
$C_{L_{D_p}}$	0240	0.45	Wing operating lift coefficient at cruise condition for engine sizing
$(N_{P_{SD}})_c$	0241	0.0	No. of primary engines shut down during cruise (for engine sizing)

HELICOPTER AERODYNAMICS INFORMATION SHEET

VARIABLE	LOCATION	VALUE ASSIGNED	REMARKS
	0301 -0344		Use of the component drag build-up option (DRGIND = 1) is adequately explained in Section 4.9. For actual values used, refer to the appropriate locations on the output sheets.

ROTOR LIMITS INFORMATION SHEET

	0347 -0377		This case has been run using dummy rotor limit values (as explained in Section 7.3). For actual dummy values used, refer to the appropriate locations on the output sheets.

HELICOPTER WEIGHT INFORMATION SHEET

	2601 -2673		This is fully explained in Section 4.11. Refer to the output sheets for the actual values used.

TAXI INFORMATION

t_T	0411	0.0333	Taxi for 2 minutes

TAKEOFF, HOVER, AND LANDING INFORMATION

TOLIND	0461	1.0	Specify required T/W for hover out of ground effect
	0462	1.0	
t_H	0551	0.1	Hover for 6 minutes
	0552	0.1	

CLIMB INFORMATION

CLMIND	0571	1.0	Climb at maximum rate of climb
	0572	4.0	Climb at constant TAS
$C_{L_{WING}}$	0601	0.4	Wing operating C_L in climb
	0602	0.5	

VARIABLE	LOCATION	VALUE ASSIGNED	REMARKS
$N_{PSD_{CL}}$	0681	2.0	Shut down two of the primary engines in climb
	0682	2.0	
CRUISE INFORMATION			
CRSIND	0721	1.0	Cruise at specified power setting
	0722	4.0	Cruise at 99 percent best range speed
POWIND	0781	2.0	Cruise at NRP for first cruise segment
$C_{L_{WING}}$	0751	0.4	Wing operating C_L in cruise
	0752	0.45	
R_{MAX}	0791	80	Values of range at end of each cruise
	0792	180	
LOITER INFORMATION			
C_{L_W}	1041	0.4	Wing operating C_L in loiter
t_L	1081	0.5	Loiter 30 minutes for reserve fuel purposes
PRIMARY ENGINE CYCLE DATA; NON-STANDARD PERFORMANCE			
N2IND	1204	2.0	A non-optimum N_{II} variation will be used
$N_{II_{MAX}}/N^*_{II}$	1223	0.905	Maximum power turbine speed is 90.5 percent of rated value (static, max power, sea level standard)

The sample case output follows:

SAMPLE CASE NO. 2

H E S C O M P

HELICOPTER SIZING & PERFORMANCE COMPUTER PROGRAM B-91

THE FOLLOWING IS A CARD BY CARD REPRODUCTION OF THE INPUT DECK FOR THIS CASE

LOC. CORRESPONDS TO LOCATION NUMBER GIVEN ON INPUT SHEET
NUM STANDS FOR THE NUMBER OF SEQUENTIAL INPUT VALUES STARTING WITH LOC. (MAX. =5)
VAL EQUALS VALUE FOR VARIABLE CORRESPONDING TO LOC.
VAL1 VALUE CORRESPONDING TO LOC.+0001
VAL2 VALUE CORRESPONDING TO LOC.+0002
ETC.

LOC.	NUM	VAL	VAL1	VAL2	VAL3	VAL4
		NOTE : IN USING AUXILIARY ENGINES ; AUXILIARY ENGINE CYCLE INPUT LOCATIONS CAN BE CREATED BY PLACING A 66666 CARD IN FRONT AND BEHIND A STANDARD ENGINE CYCLE				
1201	5	0.0	0.0	0.0	2.0000	0.0
1206	1	0.0				
1223	1	0.90500				
1301	5	1.7610	0.15900	0.0	0.32000E-01	950.00
1306	5	1100.0	1856.0	2000.0	2000.0	8.0000
1311	5	950.00	1200.0	1400.0	1600.0	1800.0
1316	5	2000.0	2200.0	2600.0	5.0000	0.0
1321	4	0.20000	0.40000	0.60000	0.80000	
1326	5	0.25000E-01	0.25700E-01	0.27800E-01	0.31300E-01	0.36200E-01
1332	5	0.16300	0.16760	0.18130	0.20410	0.23600
1338	5	0.33500	0.34440	0.37250	0.41940	0.48510
1344	5	0.54400	0.55920	0.60490	0.68110	0.78770
1350	5	0.77000	0.79160	0.85620	0.96400	1.1150
1356	5	1.0000	1.0280	1.1120	1.2520	1.4480
1362	5	1.2000	1.2336	1.3344	1.5024	1.7376
1368	5	1.5500	1.5934	1.7236	1.9406	2.2444
1374	5	8.0000	950.00	1200.0	1400.0	1600.0
1379	5	1800.0	2000.0	2200.0	2600.0	5.0000
1384	5	0.0	0.20000	0.40000	0.60000	0.80000
1390	5	0.65000E-01	0.65100E-01	0.65300E-01	0.67000E-01	0.71000E-01
1396	5	0.11500	0.11600	0.11800	0.12800	0.14000
1402	5	0.18000	0.18100	0.19000	0.20800	0.22700
1408	5	0.26000	0.26100	0.27300	0.29500	0.32500
1414	5	0.34200	0.34700	0.36200	0.38900	0.42500
1420	5	0.42500	0.43500	0.45100	0.48600	0.51700
1426	5	0.50000	0.51100	0.53000	0.56000	0.61000
1432	5	0.62600	0.63100	0.66000	0.71800	0.78000
1438	4	3.0000	950.00	1600.0	2600.0	
1447	4	3.0000	0.0	0.40000	0.80000	
1454	3	0.26000	0.27100	0.29000		
1460	3	0.82000	0.84000	0.90000		
1466	3	1.0900	1.1180	1.1650		
1502	5	8.0000	950.00	1200.0	1400.0	1600.0
1507	5	1800.0	2000.0	2200.0	2600.0	5.0000
1512	5	0.0	0.20000	0.40000	0.60000	0.80000
1518	5	0.26000	0.26500	0.27100	0.28000	0.29000
1524	5	0.52000	0.52700	0.54000	0.56000	0.59000
1530	5	0.68000	0.69000	0.70500	0.73000	0.76000
1536	5	0.82000	0.82400	0.84000	0.86800	0.90000

1542	5	0.92000	0.93000	0.95000	0.98000	1.0200
1548	5	1.0000	1.0020	1.0200	1.0500	1.0900
1554	5	1.0520	1.0550	1.0700	1.1000	1.1310
1560	5	1.0900	1.1000	1.1180	1.1350	1.1650
1601	2	3.0000	-9.0000			
1603	5	0.99500E-02	-0.28000E-01	0.26200	0.27600	2.4500
1608	1	0.86500				
1609	5	0.10500E-01	2.8200	0.90000E-01	1.1700	0.12400E-02
1614	2	0.75800	0.74300			
1616	5	10.000	0.0	0.40000E-02	0.70000E-02	0.90000E-02
1621	5	0.10000E-01	0.11000E-01	0.11500E-01	0.12000E-01	0.15500E-01
1626	5	0.22000E-01	1.0180	1.0850	1.1540	1.2330
1631	5	1.2790	1.3140	1.3270	1.3370	1.3640
1636	1	1.3970				
1	1	1.0000				
2	1	1.0000				
3	2	1.0000	0.0			
5	5	2.0000	2.0000	4.0000	1.0000	1.0000
10	3	3.0000	2.0000	1.0000		
20	3	2.0000	2.0000	2.0000		
23	4	30000.	0.0	0.0	0.0	
27	1	0.0				
28	3	0.32000	200.00	200.00		
31	1	3.0000				
32	3	1.0000	0.0	1.0500		
35	5	1.0000	2.0000	3.0000	4.0000	9.0000
40	5	60.000	3.0000	4.0000	9.0000	2.0000
45	1	100.00				
104	5	6.0000	0.20000	0.12000	0.0	0.50000
109	3	1.0000	1.0000	1.2000		
122	5	7.0000	6.5000	0.70000	1.2000	35.000
127	1	5.0000				
132	1	0.22000				
142	4	0.35000E-01	2.0000	0.78000E-01	0.10000E 00	
152	5	0.45000	0.25000	0.40000	0.70000	3.0000
157	4	0.50000	0.30000	0.70000	0.75000	
162	1	0.16000				
171	1	3.0000				
172	2	2.0000	8.0000			
176	5	4.0000	-9.0000	0.20000	0.75000E-01	0.12000
181	1	700.00				
182	2	0.12000	1.0800			
184	5	160.00	4000.0	0.0	0.95000E-01	2.0000
189	2	1.5000	1.0000			
191	2	1.5300	0.0			
193	2	0.85000	0.0			
217	1	1.7610				
219	1	4.0000				
220	2	2.0000	1.0000			
223	2	0.97000	100.00			
227	5	4000.0	1.0800	50.300	1.1050	1.0000
232	2	0.95000	0.0			
234	5	2.0000	3000.0	155.00	0.0	1.1050
240	2	0.45000	0.0			
303	4	0.60000E-02	0.15000	0.75000	1.4000	
309	1	0.32000E-02				
314	1	0.75000				
316	1	5.5000				
319	3	1.0450	1.2500	1.3000		
323	1	2.8600				
326	2	1.2500	1.540			

328	1	0.15440E 07				
329	1	6.2800				
330	1	6.0000				
331	5	0.0	0.20000	0.40000	0.60000	0.80000
336	1	1.0000				
339	5	0.59000E-02	0.60000E-02	0.68000E-02	0.80000E-02	0.95000E-02
344	1	0.11600E-01				
2602	3	3000.0	600.00	5000.0		
2605	3	0.0	0.0	0.0		
2608	5	0.0	0.0	0.0	0.0	0.0
2613	5	26.000	18.000	42.000	0.0	0.0
2618	4	100.00	0.0	0.0	0.0	
2622	5	125.00	3.0000	0.40000E-01	0.80000	0.0
2627	5	1.0000	0.0	2.0600	0.0	24.100
2632	5	0.75000	0.70000	0.0	0.0	0.0
2637	5	44.000	1.0000	61.000	1.0000	1.2500
2642	5	0.0	0.0	0.0	0.0	250.00
2647	5	4.0000	0.0	0.0	0.0	0.19000
2652	2	0.15000	0.0			
2654	5	1.0000	1.0000	1.0000	1.0000	1.0000
2659	5	1.0000	1.0000	1.0000	1.0000	1.0000
2664	1	1.0000				
2665	5	1.0000	1.0000	1.0000	1.0000	1.0000
2670	4	1.0000	1.0000	1.0000	1.0000	
347	2	3.0000	3.0000			
349	3	0.0	0.50000	1.0000		
354	3	0.0	0.50000	1.0000		
361	3	1.0000	1.0000	1.0000		
368	3	1.0000	1.0000	1.0000		
375	3	1.0000	1.0000	1.0000		
401	1	0.0				
411	1	0.33300E-01				
421	1	0.0				
431	1	0.0				
441	1	1.1050				
461	2	1.0000	1.0000			
481	2	0.0	0.0			
501	2	0.0	0.0			
511	2	0.0	0.0			
521	2	1.0800	1.0800			
531	2	0.10000E-01	0.10000E-01			
541	2	1.1050	1.1050			
551	2	0.10000E 00	0.10000E 00			
571	2	1.0000	4.0000			
582	1	120.00				
591	2	0.0	0.0			
601	2	0.40000	0.50000			
611	2	0.0	0.0			
621	2	500.00	500.00			
631	2	2.0000	2.0000			
641	2	5000.0	3000.0			
651	2	1.1050	1.1050			
661	2	0.0	0.0			
681	2	2.0000	2.0000			
701	2	0.0	0.0			
721	2	1.0000	4.0000			
732	1	25.000				
741	2	0.0	0.0			
751	2	0.40000	0.45000			
761	2	0.0	0.0			
771	2	20.000	20.000			

781	2	2.0000	2.0000			
791	2	80.000	180.00			
801	2	1.1050	1.1050			
811	2	0.0	0.0			
831	2	0.0	0.0			
1031	1	0.0				
1041	1	0.40000				
1051	1	0.0				
1061	1	0.500000E-01				
1071	1	1.1050				
1081	1	0.50000				
1101	1	0.0				
1131	1	0.0				
1181	2	1000.0	0.0			
1201	5	0.0	0.0	0.0	2.0000	0.0
1206	1	0.0				
1223	1	0.90500				

WG = 0.300000E 05 WFA = 0.0 WFR = 0.0

WG = 0.300000E 05 WFA = 0.572291E 04 WFR = 0.393521E 04

WG = 0.274461E 05 WFA = 0.451405E 04 WFR = 0.362569E 04

SAMPLE CASE NO. 2

H E S C O M P

HELICOPTER SIZING & PERFORMANCE COMPUTER PROGRAM B-91

TANDEM ROTOR WINGED HELICOPTER

S I Z E D A T A THIS RUN CONVERGED IN 3 ITERATIONS

GROSS WEIGHT = 24923. LB

FUSELAGE

LF	LENGTH	47.8 FT.
LC	CABIN LENGTH	35.0 FT.
DELTAX1	FWD. ROTOR LOCATION	9.[illegible] FT.
DELTAX2	AFT ROTOR LOCATION	4.[illegible] FT.
WF	WIDTH	6.5 FT.
G/S	ROTOR GAP/STAGGER RATIO	0.160
(O/L/D)	ROTOR OVERLAP/DIAMETER RATIO	0.220
SF	WETTED AREA	936.4 SQ. FT.

WING

AR	ASPECT RATIO	6.00
SW	AREA	134.7 SQ. FT.
BW	SPAN	28.4 FT.
CBARW	MEAN CHORD	4.7 FT.
LAMBDA C/4	QUARTER CHORD SWEEP	0.0 DEG.
LAMBDA	TAPER RATIO	0.500
(T/C)R	ROOT THICKNESS/CHORD	0.200
(T/C)T	TIP THICKNESS/CHORD	0.120
WG/SW	WING LOADING	185.0 LBS/SQ. FT.
GKW	ROTOR/WING GAP	3.0 FT.
CF/C	FLAP CHORD/MEAN CHORD RATIO	1.000

FORWARD ROTOR PYLON

AR	ASPECT RATIO	0.400
SFP	WETTED AREA	50.0 SQ. FT.
FAFP	FRONTAL AREA	8.3 SQ. FT.
HP1	HEIGHT	3.0 FT.
CBARFP	MEAN CHORD	7.5 FT.
LAMBDA FP	TAPER RATIO	0.700
(T/C)R	ROOT THICKNESS/CHORD	0.450
(T/C)T	TIP THICKNESS/CHORD	0.250

AFT ROTOR PYLON

AR	ASPECT RATIO	0.700
SAP	WETTED AREA	234.7 SQ. FT.
HP2	HEIGHT	8.5 FT.
CBARAP	MEAN CHORD	12.1 FT.
LAMBDA AP	TAPER RATIO	0.750
(T/C)R	ROOT THICKNESS/CHORD	0.500

(T/C)T	TIP THICKNESS/CHORD	0.300

PRIMARY ENGINE NACELLE

LN	LENGTH	5.2 FT.
DN	MEAN DIAMETER	1. FT.
SN	WETTED AREA(TOTAL FOR ALL ENGINES)	94.5 SQ. FT.

AUXILIARY INDEPENDENT ENGINE NACELLE -NO AUXILIARY INDEPENDENT ENGINE USED

PROPELLER(AUXILIARY PROPULSION) - NO PROPELLER USED

MAIN ROTOR

DMR	DIAMETER	44.5 FT.
SIGMR	SOLIDITY	0.122
WG/A	DISC LOADING	8.0 LB/SC. FT.
CT/SIGMA	THRUST COEFF./SOLIDITY	0.095
NR	NO. OF ROTORS	2.
NO. BLADES	NO. OF BLADES/ROTOR	4.
THETA	BLADE TWIST	-9.000 DEG.
XC	BLADE CUTOUT/RADIUS RATIO	0.200
VTIP	TIP SPEED	700. FT./SEC.

SAMPLE CASE NO. 2

H E S C O M P

HELICOPTER SIZING & PERFORMANCE COMPUTER PROGRAM B-91

W E I G H T S D A T A IN LBS

	MLF	MANEUVER LOAD FACTOR	3.000		
	GLF	GUST LOAD FACTOR	1.438		
	ULF	ULTIMATE LOAD FACTOR	4.500		
PROPULSION GROUP					
	WPRG	TOTAL MAIN ROTOR GROUP	2956.		
K12	WPRB	MAIN ROTOR BLADE (PER ROTOR)		601.	
K13	WPH	MAIN ROTOR HUB (PER ROTOR)		581.	
	WBF	BLADE FOLDING(PER ROTOR)		296.	
K15	WAR	AUXILIARY PROPULSION ROTOR GROUP	0.		
	WDS	DRIVE SYSTEM	2281.		
K16	WPDS	MAIN ROTOR DRIVE SYSTEM		2281.	
K20	WTRDS	TAIL ROTOR DRIVE SYSTEM		0.	
K17	WADS	AUXILIARY PROPULSION DRIVE SYSTEM		0.	
K18	WEP	PRIMARY ENGINES	1079.		
K19	WEA	AUXILARY ENGINES	0.		
	WPEI	PRIMARY ENGINE INSTALLATION	162.		
	WAEI	AUXILIARY ENGINE INSTALLATION	0.		
	WFS	FUEL SYSTEM	630.		
DELTA	WP	PROPULSION GROUP WEIGHT INCREMENT	0.		
	WP	TOTAL PROPULSION GROUP WEIGHT			7109.
STRUCTURES GROUP					
K8	WW	WING	278.		
	WTG	TAIL GROUP	0.		
K9	WHT	HOR. TAIL		0.	
K14	WTR	TAIL ROTOR		0.	
K6	WB	FUSELAGE	3255.		
K7	WLG	LANDING GEAR	997.		
	WNG	NOSE GEAR		199.	
	WMG	MAIN GEAR		798.	
	WTES	TOTAL ENGINE SECTION	218.		
	WPES	PRIMARY ENGINE SECTION		218.	
	WAES	AUXILIARY ENGINE SECTION		0.	
DELTA	WST	STRUCTURE WEIGHT INCREMENT	0.		
	WST	TOTAL STRUCTURE WEIGHT			4748.
FLIGHT CONTROLS GROUP					
	WPFC	PRIMARY FLIGHT CONTROLS	1149.		
	WCC	COCKPIT CONTROLS		97.	
K1	WRC	MAIN ROTOR CONTROLS		353.	
K2	WSC	MAIN ROTOR SYSTEMS CONTROLS		599.	
K3	WFW	FIXED WING CONTROLS		0.	
	WTM	TILT MECHANISM		0.	
	WSAS	SAS		100.	
	WAFC	AUXILIARY FLIGHT CONTROLS	0.		
K4	WRCA	AUX. PROPULSION ROTOR CONTROLS		0.	
K5	WSCA	AUX. PROPULSION ROTOR SYS. CONTROLS		0.	

	WMC	MISCELLANEOUS CONTROLS	0.
	DELTA WFC	CONTROL WEIGHT INCREMENT	0.
	WFC	TOTAL CONTROL WEIGHT	1149.
	WFE	WEIGHT OF FIXED EQUIPMENT	3000.
	WE	WEIGHT EMPTY	16005.
	WFUL	FIXED USEFUL LOAD	600.
	OWE	OPERATING WEIGHT EMPTY	16605.
	WPL	PAYLOAD	5000.
	(WF)A	FUEL	3318.
	WG	GROSS WEIGHT	24923.

AD-A046 367 BOEING VERTOL CO PHILADELPHIA PA F/G 1/3
HESCOMP. THE HELICOPTER SIZING AND PERFORMANCE COMPUTER PROGRAM--ETC(U)
NOV 74 S J DAVIS, J S WISNIEWSKI N62269-74-C-0757
UNCLASSIFIED D210-10699-2 NL

6 OF 6
AD A046367

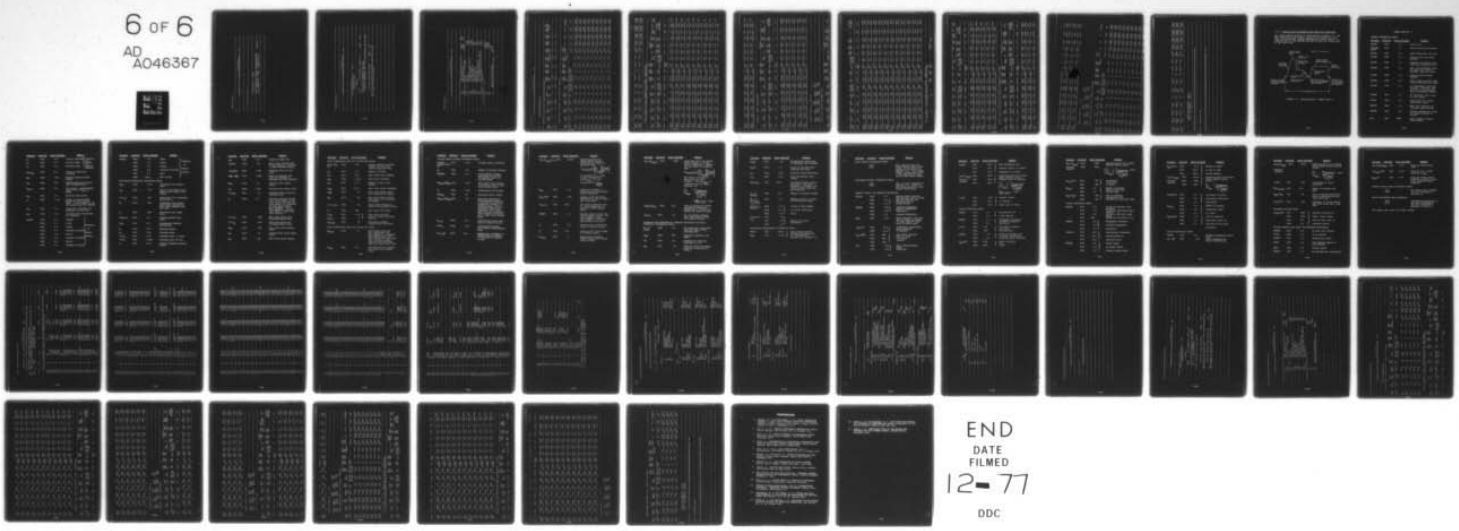

END
DATE FILMED
12-77
DDC

SAMPLE CASE NO. 2

H E S C O M P

HELICOPTER SIZING & PERFORMANCE COMPUTER PROGRAM B-91

R O T O R D A T A

ROTOR CYCLE NO. 3.0000

MAIN ROTOR SOLIDITY SIZED BY MANUEVER CONDITIONS

H = 4000.0 FT. , TEMP = 44.7 DEG. , V = 160.0 KT.

ROTOR MANUEVER G'S = 1.500 , CT/SIGMA = 0.095

SAMPLE CASE NO. 2

H E S C O M P
HELICOPTER SIZING & PERFORMANCE COMPUTER PROGRAM 8-91

P R O P U L S I O N D A T A

PRIMARY PROPULSION CYCLE NO. 1.761
TURBOSHAFT ENGINE

4. ENGINES

BHP*P MAX. STANDARD S.L. STATIC H.P. 6788. H.P.

ENGINE SIZED FOR TAKEOFF AT T/W =1.08
H = 4000. FT, TEMPERATURE = 95.04 DEG.F.,
1.000 ENGINES INOPERATIVE, AND 0.0 FT/MIN VERTICAL RATE OF CLIMB.

MAIN ROTOR DRIVE SYSTEM RATING 3688. H.P.

XMSN SIZED AT 100. PERCENT OF MAIN ROTOR HOVER POWER REQUIRED
AT H = 4000. FT, TEMP = 95.04 DEG.F.

SAMPLE CASE NO. 2

H E S C O M P

HELICOPTER SIZING & PERFORMANCE COMPUTER PROGRAM 8-91

A E R O D Y N A M I C S D A T A

FE	TOTAL EFFECTIVE FLATPLATE AREA	23.697	SQFT
SWET	TOTAL WETTED AREA	1530.	SQFT
CbARF	MEAN SKIN FRICTION COEFF.	0.015488	

D R A G B R E A K D O W N IN SQFT

FEW	WING FE	1.288
FEF	FUSELAGE FE	2.479
FEFP	FORWARD(MAIN) ROTOR PYLON FE	1.551
FEAP	AFT ROTOR PYLON FE	1.332
FEMRH	MAIN ROTOR HUB(S) FE	12.093
FETRH	TAIL ROTOR HUB FE	0.0
FEVT	VERTICAL TAIL FE	0.0
FEHT	HORIZONTAL TAIL FE	0.0
FEN	PRIMARY ENGINE NACELLE FE	0.895
FENI	AUX. INDEPENDENT CRUISE ENG. NAC. FE	0.0
FENS	AUX. INDPENDENT CRUISE ENG. STRUT FE	0.0
DELTA FE	INCREMENTAL FE	4.058

A E R O D Y N A M I C C O E F F .

A5		22.40872
A6		1.62041
A7		0.07074
A8		0.00010
A9		0.0
E	WING LIFT EFFICIENCY FACTOR	0.75000
EVT	VERTICAL TAIL LIFT EFFICIENCY FACTOR	0.0

SAMPLE CASE NO. 2

H E S C O M P

HELICOPTER SIZING & PERFORMANCE COMPUTER PROGRAM B-91

MISSION PERFORMANCE DATA

TAXI FOR 0.033 HRS. AT GROUND IDLE ENGINE RATING

TIME (HRS)	RANGE (N.M.)	FUEL USED (LBS)	WEIGHT (LBS.)	PRESS. ALT. (FT)	TAS (KTS)	PRIM. TURB. TEMP. (R)	PRIM. ENG. CODE	PRIM. ENG. PEHF	TOTAL FUEL FLOW (LBS/HR)	AUX. TURB. TEMP. (R)	AUX. ENG. CODE	AUX. ENG. PEHF	AUX. ENG. FUEL FLOW (LBS/HR)
0.0	0.0	0.0	24923.	0.	0.0	950.0	T	0.0	463.	----	----	----	
0.033	0.0	15.4	24908.	0.	0.0	950.0	T	0.0	463.	----	----	----	

TAKEOFF, HOVER, OR LAND AT T/W = 1.080 FOR 0.100 HRS.

TIME (HRS)	RANGE (N.M.)	FUEL USED (LBS)	WEIGHT (LBS.)	PRES. ALT. (FT)	TAS (KTS)	PRIM. TURB. TEMP. (R)	PRIM. ENG. CODE	PRIM. ENG. PEHF	TOTAL FUEL FLOW (LBS/HR)	THRUST TO WEIGHT	FM	BHP	CT	CT/SIGMA
M.ROTOR VTIP	M.ROTOR RHP	T.ROTOR VTIP (FPS)	T.ROTOR RHP	VRC RHP	PRIM.ENG FUEL FLOW (LBS/HR)	AUX.ENG FUEL FLOW (LBS/HR)	ROTLIM CODE			DELDCM	FMI	CPPRO	CPIND	CDO
0.033	0.0	15.4	24908.	0.	0.0	1575.1	P	0.486	1781.	1.080	0.671	3302.	0.0074	0.061
700.0	3106.	----	----	0.	1781.		A			0.0	0.704	0.00011	0.00056	0.0092
0.043	0.0	33.2	24890.	0.	0.0	1574.7	P	0.486	1780.	1.080	0.671	3298.	0.0074	0.061
700.0	3102.	----	----	0.	1780.		A			0.0	0.704	0.00011	0.00056	0.0092
0.053	0.0	51.0	24872.	0.	0.0	1574.4	P	0.485	1779.	1.080	0.671	3295.	0.0074	0.061
700.0	3099.	----	----	0.	1779.		A			0.0	0.704	0.00011	0.00056	0.0092
0.063	0.0	68.8	24855.	0.	0.0	1574.0	P	0.485	1778.	1.080	0.671	3292.	0.0074	0.061
700.0	3096.	----	----	0.	1778.		A			0.0	0.704	0.00011	0.00056	0.0092
0.073	0.0	86.6	24837.	0.	0.0	1573.6	P	0.484	1777.	1.080	0.671	3288.	0.0074	0.061
700.0	3093.	----	----	0.	1777.		A			0.0	0.704	0.00011	0.00056	0.0092
0.083	0.0	104.4	24819.	0.	0.0	1573.2	P	0.484	1776.	1.080	0.671	3285.	0.0074	0.060
700.0	3090.	----	----	0.	1776.		A			0.0	0.704	0.00011	0.00056	0.0092
0.093	0.0	122.1	24801.	0.	0.0	1572.8	P	0.483	1775.	1.080	0.671	3282.	0.0074	0.060
700.0	3086.	----	----	0.	1775.		A			0.0	0.704	0.00011	0.00056	0.0092
0.103	0.0	139.9	24784.	0.	0.0	1572.4	P	0.483	1774.	1.080	0.671	3278.	0.0074	0.060
700.0	3083.	----	----	0.	1774.		A			0.0	0.704	0.00011	0.00056	0.0092
0.113	0.0	157.6	24766.	0.	0.0	1572.0	P	0.483	1772.	1.080	0.671	3275.	0.0074	0.060
700.0	3080.	----	----	0.	1772.		A			0.0	0.704	0.00011	0.00055	0.0092

0.123	0.0	175.3	24748.	0.	0.0	1571.6	P	0.482	1771.	1.080	0.671	3272.	0.0074	0.060
700.0	3077.	----	----	0.	1771.		A			0.0	0.704	0.00011	0.00055	0.0092
0.133	0.0	193.1	24730.	0.	0.0	1571.3	P	0.482	1770.	1.080	0.671	3269.	0.0074	0.060
700.0	3073.	----	----	0.	1770.		A			C.0	0.704	0.00011	0.00055	0.0092

CLIMB TO 5000. FT. WITH MAXIMUM R/C AT NORMAL ENGINE RATING
** TAS(AND EAS) IS THE HORIZONTAL COMPONENT OF THE FLIGHT PATH SPEED

TIME (HRS)	RANGE (N.M.)	FUEL USED (LBS)	WEIGHT (LBS.)	PRES. ALT. (FT)	TAS (KTS)	PRIM. TURB. TEMP. (R)	PRIM. ENG. CODE	PRIM. ENG. PEHF	EAS (KTS)	MU	CT PRIME OVER SIGMA	ALPHA D/L (DEG)	GAMMA (DEG)	BHP	R/C (FPM)
M.ROTOR VTIP (FPS)	M.ROTOR RHP	T.ROTOR VTIP (FPS)	T.ROTOR RHP	PROP VTIP (FPS)	PRIM.ENG FUEL FLOW (LBS/HR)	BHP AUX	ETAP PROP	TAUX/T	AUX. ENG. FUEL FLOW (LBS/HR)	AUX. TURB. TEMP.	AUX. ENG. CODE	AUX. ENG. PEHF	AUX. ENG. BHP OR THRUST		
CPPRO	CPIND	CPPAR	CPNUD	CDO	DELCDS	DELCDM	CXR	ROTLIM CODE	J	CP	CT	CLW	COW	RN	
0.133	0.0	193.1	24730.	0.	83.5	1856.0	T	0.835	83.5	0.204	0.053	-2.1	6.3	2881.	939.
700.0	1369.	----	----	----	1320.	----	----	0.0	----	----	----	----		----	
0.000156	0.000189	0.000049	0.000011	0.01068	0.0	0.00022	0.000236	A	----	----	----	0.400	0.007	0.947	
0.142	0.75	204.8	24719.	500.	84.5	1856.0	T	0.837	83.9	0.206	0.054	-2.1	5.8	2835.	887.
700.0	1872.	----	----	----	1300.	----	----	0.0	----	----	----	----		----	
0.000157	0.000192	0.000051	0.000012	0.01072	0.0	0.00026	0.000241	A	----	----	----	0.400	0.007	0.947	
0.152	1.56	217.0	24706.	1000.	84.5	1856.0	T	0.838	83.3	0.206	0.055	-2.1	5.6	2805.	852.
700.0	1874.	----	----	----	1285.	----	----	0.0	----	----	----	----		----	
0.000157	0.000198	0.000051	0.000012	0.01074	0.0	0.00028	0.000242	A	----	----	----	0.400	0.007	0.947	
0.161	2.39	229.6	24694.	1500.	85.5	1856.0	T	0.840	83.7	0.209	0.055	-2.1	5.3	2775.	816.
700.0	1877.	----	----	----	1269.	----	----	0.0	----	----	----	----		----	
0.000158	0.000201	0.000053	0.000013	0.01078	0.00000	0.00032	0.000247	A	----	----	----	0.400	0.007	0.947	
0.172	3.28	242.5	24681.	2000.	85.5	1856.0	T	0.841	83.1	0.209	0.056	-2.1	5.1	2745.	780.
700.0	1879.	----	----	----	1254.	----	----	0.0	----	----	----	----		----	
0.000159	0.000207	0.000053	0.000013	0.01081	0.00000	0.00035	0.000248	A	----	----	----	0.400	0.007	0.948	
0.182	4.20	255.9	24667.	2500.	85.5	1856.0	T	0.843	82.4	0.209	0.057	-2.1	4.8	2714.	743.
700.0	1883.	----	----	----	1238.	----	----	0.0	----	----	----	----		----	
0.000159	0.000214	0.000053	0.000013	0.01084	0.00000	0.00038	0.000249	A	----	----	----	0.400	0.007	0.948	
0.193	5.18	269.8	24654.	3000.	86.5	1856.0	T	0.844	82.8	0.211	0.058	-2.1	4.5	2684.	705.
700.0	1886.	----	----	----	1222.	----	----	0.0	----	----	----	----		----	
0.000161	0.000217	0.000055	0.000014	0.01089	0.00000	0.00043	0.000254	A	----	----	----	0.400	0.007	0.948	
0.205	6.21	284.3	24639.	3500.	86.5	1856.0	T	0.846	82.2	0.211	0.059	-2.0	4.3	2654.	668.
700.0	1890.	----	----	----	1207.	----	----	0.0	----	----	----	----		----	
0.000161	0.000224	0.000055	0.000014	0.01093	0.00000	0.00047	0.000255	A	----	----	----	0.400	0.007	0.949	
0.218	7.30	299.3	24624.	4000.	87.5	1856.0	T	0.847	82.5	0.213	0.059	-2.1	4.0	2623.	630.
700.0	1895.	----	----	----	1192.	----	----	0.0	----	----	----	----		----	
0.000163	0.000228	0.000057	0.000015	0.01100	0.00000	0.00053	0.000260	A	----	----	----	0.400	0.007	0.948	

0.231	8.48	315.1	24608.	4500.	87.5	1856.0	T	0.849	81.9	0.213	0.060	-2.0	3.8	2593.	592.
700.0	1899.	----	----	----	1177.	----	----	0.0	----	----	----	----		----	
0.000163	0.000235	0.000057	0.000015	0.01104	0.00000	0.00057	0.000261	A	----	----	----	0.400	0.007	0.949	
0.245	9.72	331.6	24592.	5000.	87.5	1856.0	T	0.850	81.3	0.213	0.061	-2.0	3.5	2563.	553.
700.0	1904.	----	----	----	1161.	----	----	0.0	----	----	----	----		----	
0.000164	0.000242	0.000058	0.000015	0.01108	0.00000	0.00062	0.000263	A	----	----	----	0.400	0.007	0.950	

CRUISE AT NORMAL ENGINE RATING

TIME (HRS)	RANGE (N.M.)	FUEL USED (LBS)	WEIGHT (LBS.)	PRES. ALT. (FT)	TAS (KTS)	PRIM. TURB. TEMP. (R)	PRIM. ENG. CODE	PRIM. ENG. PEHF	EAS (KTS)	MU	CT PRIME OVER SIGMA	ALPHA D/L (DEG)	SPEC. RANGE (NMPP)	BHP
M.ROTOR VTIP (FPS)	M.ROTOR RHP	T.ROTOR VTIP (FPS)	T.ROTOR RHP	PROP VTIP (FPS)	PRIM.ENG FUEL FLOW (LBS/HR)	BHP AUX	ETAP PROP	TAUX/T	AUX. ENG. FUEL FLOW (LBS/HR)	AUX. TURB. TEMP.	AUX. ENG. CODE	AUX. ENG. PEHF		AUX. ENG. BHP OR THRUST
CPPRO	CP IND	CPPAR	CPNUD	CDO	DELCDS	DELCDM	CXR	ROTLIM CODE	J	CP	CT	CLW	CDW	RN
0.245	9.72	331.6	24592.	5000.	186.6	1856.0	T	0.851	173.3	0.450	0.050	-8.3	.07877	5385.
700.0	5126.	----	----	----	2369.	----	----	0.0	----	----	----	----		----
0.000569	0.000078	0.000610	0.000031	0.02401	0.00084	0.01267	0.000889	A	----	----	----	0.400	0.007	0.777
0.352	29.72	585.5	24338.	5000.	186.9	1856.0	T	0.851	173.5	0.451	0.049	-8.4	.07888	5384.
700.0	5126.	----	----	----	2370.	----	----	0.0	----	----	----	----		----
0.000569	0.000076	0.000614	0.000030	0.02394	0.00079	0.01265	0.000891	A	----	----	----	0.400	0.007	0.774
0.459	49.72	839.1	24084.	5000.	187.2	1856.0	T	0.851	173.8	0.451	0.049	-8.5	.07899	5384.
700.0	5125.	----	----	----	2370.	----	----	0.0	----	----	----	----		----
0.000568	0.000073	0.000617	0.000030	0.02388	0.00075	0.01263	0.000892	A	----	----	----	0.400	0.007	0.771
0.566	69.72	1092.3	23831.	5000.	187.5	1856.0	T	0.851	174.0	0.452	0.048	-8.7	.07910	5383.
700.0	5125.	----	----	----	2370.	----	----	0.0	----	----	----	----		----
0.000567	0.000071	0.000620	0.000030	0.02381	0.00070	0.01261	0.000894	A	----	----	----	0.400	0.007	0.768
0.621	80.00	1222.2	23701.	5000.	187.6	1856.0	T	0.851	174.2	0.452	0.048	-8.8	.07916	5383.
700.0	5124.	----	----	----	2370.	----	----	0.0	----	----	----	----		----
0.000567	0.000070	0.000622	0.000029	0.02378	0.00068	0.01260	0.000895	A	----	----	----	0.400	0.007	0.766

TRANSFER ALTITUDE TO 1000. FT.

TIME (HRS)	RANGE (N.M.)	FUEL USED (LBS)	WEIGHT (LBS.)	PRES. ALT. (FT)
0.621	80.00	1222.2	23701.	5000.
0.621	80.00	1222.2	23701.	1000.

LOITER FOR 0.500 HRS. FOR RESERVE FUEL

TIME (HRS)	RANGE (N.M.)	FUEL USED (LBS)	WEIGHT (LBS.)	PRES. ALT. (FT)	TAS (KTS)	PRIM. TURB. TEMP. (R)	PRIM. ENG. CODE	PRIM. ENG. PEHF	EAS (KTS)	MU	CT PRIME OVER SIGMA	ALPHA D/L (DEG)	TOTAL FUEL FLOW (LBS/	BHP

M.ROTOR VTIP (FPS)	M.ROTOR RHP	T.ROTOR VTIP (FPS)	T.ROTOR RHP	PROP VTIP (FPS)	PRIM.ENG FUEL FLOW (LBS/HR)	BHP AUX	ETAP PROP	TAUX/T	AUX. ENG. FUEL FLOW (LBS/HR)	AUX. TURB. TEMP.	AUX. ENG. CODE	AUX. ENG. PEHF	AUX. ENG. BHP OR THRUST
CPPRO	CP IND	CPPAR	CPNUD	CDO	DELCDS	DELCDM	CXR	ROTLIM CODE	J	CP	CT	CLW	CDW	RN
0.621	80.00	1222.2	23701.	1000.	85.0	1415.1	P	0.291	83.7	0.205	0.052	-2.1	1297.	1948.
700.0	1792.	----	----	----	1297.	----	----	0.0	----	----	----	----		----
0.000156	0.000183	0.000050	0.000011	0.01071	0.0	0.00025	0.000237	A	----	----	----	0.400	0.007	0.946
0.671	80.00	1287.0	23636.	1000.	85.0	1414.5	P	0.290	83.7	0.205	0.052	-2.1	1295.	1943.
700.0	1787.	----	----	----	1295.	----	----	0.0	----	----	----	----		----
0.000156	0.000182	0.000050	0.000011	0.01071	0.0	0.00025	0.000236	A	----	----	----	0.400	0.007	0.946
0.721	80.00	1351.8	23572.	1000.	85.0	1413.9	P	0.289	83.7	0.205	0.052	-2.1	1294.	1937.
700.0	1782.	----	----	----	1294.	----	----	0.0	----	----	----	----		----
0.000156	0.000181	0.000049	0.000011	0.01071	0.0	0.00024	0.000236	A	----	----	----	0.400	0.007	0.946
0.771	80.00	1416.5	23507.	1000.	85.0	1413.2	P	0.289	83.7	0.205	0.052	-2.1	1292.	1932.
700.0	1777.	----	----	----	1292.	----	----	0.0	----	----	----	----		----
0.000156	0.000180	0.000049	0.000011	0.01071	0.0	0.00024	0.000236	A	----	----	----	0.400	0.007	0.946
0.821	80.00	1481.1	23442.	1000.	85.0	1412.6	P	0.288	83.7	0.205	0.052	-2.1	1290.	1927.
700.0	1772.	----	----	----	1290.	----	----	0.0	----	----	----	----		----
0.000156	0.000178	0.000049	0.000011	0.01071	0.0	0.00024	0.000236	A	----	----	----	0.400	0.007	0.945
0.871	80.00	1545.6	23378.	1000.	85.0	1412.0	P	0.287	83.7	0.205	0.051	-2.2	1289.	1922.
700.0	1767.	----	----	----	1289.	----	----	0.0	----	----	----	----		----
0.000156	0.000177	0.000049	0.000011	0.01070	0.0	0.00024	0.000236	A	----	----	----	0.400	0.007	0.945
0.921	80.00	1610.1	23313.	1000.	84.0	1411.4	P	0.286	82.7	0.202	0.051	-2.1	1287.	1916.
700.0	1761.	----	----	----	1287.	----	----	0.0	----	----	----	----		----
0.000155	0.000179	0.000048	0.000011	0.01069	0.0	0.00022	0.000231	A	----	----	----	0.400	0.007	0.946
0.971	80.00	1674.4	23249.	1000.	84.0	1410.8	P	0.285	82.7	0.202	0.051	-2.1	1285.	1910.
700.0	1756.	----	----	----	1285.	----	----	0.0	----	----	----	----		----
0.000155	0.000178	0.000048	0.000010	0.01069	0.0	0.00022	0.000231	A	----	----	----	0.400	0.007	0.946
1.021	80.00	1738.7	23185.	1000.	84.0	1410.2	P	0.285	82.7	0.202	0.051	-2.1	1284.	1905.
700.0	1751.	----	----	----	1284.	----	----	0.0	----	----	----	----		----
0.000155	0.000177	0.000048	0.000010	0.01068	0.0	0.00022	0.000231	A	----	----	----	0.400	0.007	0.946
1.071	80.00	1802.9	23120.	1000.	84.0	1409.6	P	0.284	82.7	0.202	0.051	-2.1	1282.	1900.
700.0	1746.	----	----	----	1282.	----	----	0.0	----	----	----	----		----
0.000155	0.000176	0.000048	0.000010	0.01068	0.0	0.00022	0.000231	A	----	----	----	0.400	0.007	0.946
1.121	80.00	1867.0	23056.	1000.	84.0	1409.0	P	0.283	82.7	0.202	0.051	-2.1	1281.	1895.
700.0	1741.	----	----	----	1281.	----	----	0.0	----	----	----	----		----
0.000155	0.000175	0.000048	0.000010	0.01068	0.0	0.00022	0.000231	A	----	----	----	0.400	0.007	0.946

CLIMB TO 3000. FT. WITH CONSTANT TAS AT NORMAL ENGINE RATING
** TAS(AND EAS) IS THE HORIZONTAL COMPONENT OF THE FLIGHT PATH SPEED

FUEL	PRES.	PRIM. TURB.	PRIM. ENG.	PRIM. ENG.	CT PRIME OVER	ALPHA

TIME (HRS)	RANGE (N.M.)	USED (LBS)	WEIGHT (LBS.)	ALT. (FT)	TAS (KTS)	TEMP. (R)	CODE	PEHF	EAS (KTS)	MU	SIGMA	D/L (DEG)	GAMMA (DEG)	BHP	R/C (FPM)
M.ROTOR VTIP (FPS)	M.ROTOR RHP	T.ROTOR VTIP (FPS)	T.ROTOR RHP	PROP VTIP (FPS)	PRIM.ENG FUEL FLOW (LBS/HR)	BHP AUX	ETAP PROP	TAUX/T	AUX. ENG. FUEL FLOW (LBS/HR)	AUX. TURB. TEMP.	AUX. ENG. CODE	AUX. ENG. PEHF		AUX. ENG. BHP OR THRUST	
CPPRO	CPIND	CPPAR	CPNUD	CDU	DELCDS	DELCDM	CXR	ROTLIM CODE	J	CP	CT	CLW	CDW	RN	
0.621	80.00	1867.0	23701.	1000.	120.0	1856.0	T	0.838	118.3	0.289	0.048	-4.2	3.0	2838.	627.
700.0	2127.	----	----	----	1293.	----	----	0.0	----	----	----	----		----	
0.000202	0.000109	0.000135	0.000027	0.01193	0.00000	0.00143	0.000430	A	----	----	----	0.500	0.007	0.865	
0.634	81.60	1884.2	23684.	1500.	120.0	1856.0	T	0.840	117.4	0.289	0.048	-4.2	2.8	2807.	598.
700.0	2121.	----	----	----	1278.	----	----	0.0	----	----	----	----		----	
0.000204	0.000113	0.000136	0.000028	0.01201	0.00000	0.00151	0.000431	A	----	----	----	0.500	0.007	0.867	
0.648	83.27	1902.0	23666.	2000.	120.0	1856.0	T	0.842	116.5	0.289	0.049	-4.1	2.7	2777.	570.
700.0	2116.	----	----	----	1262.	----	----	0.0	----	----	----	----		----	
0.000205	0.000116	0.000136	0.000028	0.01209	0.00000	0.00160	0.000432	A	----	----	----	0.500	0.007	0.869	
0.663	85.03	1920.4	23648.	2500.	120.0	1856.0	T	0.843	115.7	0.289	0.050	-4.1	2.5	2746.	540.
700.0	2111.	----	----	----	1246.	----	----	0.0	----	----	----	----		----	
0.000207	0.000120	0.000137	0.000029	0.01218	0.00001	0.00168	0.000433	A	----	----	----	0.500	0.007	0.871	
0.678	86.88	1939.7	23629.	3000.	120.0	1856.0	T	0.844	114.8	0.289	0.051	-4.0	2.4	2715.	510.
700.0	2107.	----	----	----	1231.	----	----	0.0	----	----	----	----		----	
0.000208	0.000124	0.000137	0.000029	0.01227	0.00001	0.00177	0.000435	A	----	----	----	0.500	0.007	0.873	

CRUISE AT SPEED FOR 99 PER CENT BEST RANGE WITH HEADWIND OF 25.0 KNOTS

TIME (HRS)	RANGE (N.M.)	FUEL USED (LBS)	WEIGHT (LBS.)	PRES. ALT. (FT)	TAS (KTS)	PRIM. TURB. TEMP. (R)	PRIM. ENG. CODE	PRIM. ENG. PEHF	EAS (KTS)	MU	CT PRIME OVER SIGMA	ALPHA D/L (DEG)	SPEC. RANGE (NMPP)	BHP
M.ROTOR VTIP (FPS)	M.ROTOR RHP	T.ROTOR VTIP (FPS)	T.ROTOR RHP	PROP VTIP (FPS)	PRIM.ENG FUEL FLOW (LBS/HR)	BHP AUX	ETAP PROP	TAUX/T	AUX. ENG. FUEL FLOW (LBS/HR)	AUX. TURB. TEMP.	AUX. ENG. CODE	AUX. ENG. PEHF		AUX. ENG. BHP OR THRUST	
CPPRO	CPIND	CPPAR	CPNUD	CDU	DELCDS	DELCDM	CXR	ROTLIM CODE	J	CP	CT	CLW	CDW	RN	
0.678	86.88	1939.7	23629.	3000.	160.1	1609.4	P	0.548	153.1	0.386	0.046	-6.9	.07600	3587.	
700.0	3382.	----	----	----	1779.	----	----	0.0	----	----	----	----		----	
0.000342	0.000078	0.000339	0.000041	0.01655	0.00012	0.00593	0.000685	A	----	----	----	0.450	0.007	0.796	
0.826	106.88	2202.8	23365.	3000.	159.6	1604.1	P	0.541	152.6	0.385	0.046	-6.9	.07636	3543.	
700.0	3339.	----	----	----	1764.	----	----	0.0	----	----	----	----		----	
0.000338	0.000076	0.000335	0.000041	0.01641	0.00010	0.00581	0.000680	A	----	----	----	0.450	0.007	0.795	
0.975	126.88	2464.7	23103.	3000.	159.6	1601.7	P	0.539	152.6	0.385	0.045	-7.0	.07665	3524.	
700.0	3321.	----	----	----	1757.	----	----	0.0	----	----	----	----		----	

0.000337	0.000074	0.000335	0.000040	0.01635	0.00007	0.00576	0.000679	A	----	----	----	0.450	0.007	0.793
1.123	146.88	2725.7	22842.	3000.	159.6	1599.4	P	0.536	152.6	0.385	0.045	-7.1	.07693	3505.
703.0	3303.	----	----	----	1751.	----	----	0.0	----	----	----	----		----
0.000336	0.000072	0.000334	0.000039	0.01629	0.00008	0.00571	0.000678	A	----	----	----	0.450	0.007	0.790
1.122	146.88	2985.6	22583.	3000.	159.6	1597.1		0.533	152.6	0.385	0.044	-7.2	.07721	3486.
703.0	3303.	----	----	----	1746.	----		0.0	----	----	----	----		----
0.000335	0.000070	0.000334	0.000039	0.01623	0.00007	0.00567		A	----	----	----	0.450	0.007	0.788
1.370	180.00	3155.6	22413.	3000.	159.6	1595.6	P	0.531	152.6	0.385	0.043	-7.3	.07740	3474.
703.0	3303.	----	----	----	1740.	----	----	0.0	----	----	----	----		----
0.000334	0.000069	0.000333	0.000039	0.01620	0.00007	0.00563	0.000677	A	----	----	----	0.450	0.007	0.786

TRANSFER ALTITUDE TO 0. FT.

TIME (HRS)	RANGE (N.M.)	FUEL USED (LBS)	WEIGHT (LBS.)	PRES. ALT. (FT)
1.370	180.00	3155.6	22413.	3000.
1.370	180.00	3155.6	22413.	0.

TAKEOFF, HOVER, OR LAND AT T/W = 1.080 FOR 0.100 HRS.

TIME (HRS)	RANGE (N.M.)	FUEL USED (LBS)	WEIGHT (LBS.)	PRES. ALT. (FT)	TAS (KTS)	PRIM. TURB. TEMP. (R)	PRIM. ENG. CODE	PRIM. ENG. PERF	TOTAL FUEL FLOW (LBS/HR)	THRUST TO WEIGHT	FM	BHP	CT	CT/SIGMA
M.ROTOR VTIP	M.ROTOR SHP	T.ROTOR VTIP (FPS)	T.ROTOR RHP	VRC RHP	PRIM.ENG FUEL FLOW (LBS/HR)	AUX.ENG FUEL FLOW (LBS/HR)	ROTLIM CODE			DELDCM	FMI	CPPRO	CPIND	CPO
1.370	180.00	3155.6	22413.	0.	0.0	1524.4	P	0.422	1636.	1.080	0.663	2864.	0.0067	0.055
703.0	2631.	----	----	0.	1636.	----	A			0.0	0.695	0.00011	0.00047	0.0092
1.370	180.00	3171.9	22396.	0.	0.0	1524.1	P	0.422	1635.	1.080	0.663	2861.	0.0067	0.055
703.0	2629.	----	----	0.	1635.	----	A			0.0	0.695	0.00011	0.00047	0.0092
1.370	180.00	3188.3	22380.	0.	0.0	1523.8	P	0.421	1634.	1.080	0.663	2859.	0.0067	0.055
703.0	2626.	----	----	0.	1634.	----	A			0.0	0.695	0.00011	0.00047	0.0092
1.370	180.00	3204.6	22364.	0.	0.0	1523.5	P	0.421	1633.	1.080	0.663	2856.	0.0067	0.055
703.0	2624.	----	----	0.	1633.	----	A			0.0	0.695	0.00011	0.00047	0.0092
1.370	180.00	3221.0	22347.	0.	0.0	1523.2	P	0.420	1632.	1.080	0.663	2853.	0.0067	0.054
703.0	2621.	----	----	0.	1632.	----	A			0.0	0.695	0.00011	0.00047	0.0092
1.370	180.00	3237.3	22331.	0.	0.0	1522.9	P	0.420	1631.	1.080	0.663	2851.	0.0066	0.054
703.0	2618.	----	----	0.	1631.	----	A			0.0	0.695	0.00011	0.00047	0.0092
1.370	180.00	3253.6	22315.	0.	0.0	1522.6	P	0.420	1631.	1.080	0.663	2848.	0.0066	0.054
703.0	2616.	----	----	0.	1631.	----	A			0.0	0.695	0.00011	0.00046	0.0092
1.370	180.00	3269.9	22298.	0.	0.0	1522.3	P	0.419	1630.	1.080	0.663	2846.	0.0066	0.054
703.0	2613.	----	----	0.	1630.	----	A			0.0	0.695	0.00011	0.00046	0.0092
1.370	180.00	3286.2	22282.	0.	0.0	1521.9	P	0.419	1629.	1.080	0.663	2843.	0.0066	0.054
703.0	2611.	----	----	0.	1629.	----	A			0.0	0.695	0.00011	0.00046	0.0092

1.460	180.00	3302.5	22266.	0.	0.0	1521.6	P	0.418	1628.	1.080	0.663	2840.	0.0066	0.054
700.0	2658.	----	----	0.	1628.	----	A			0.0	0.694	0.00011	0.00046	0.0092
1.470	180.00	3318.8	22249.	0.	0.0	1521.3	P	0.418	1627.	1.080	0.663	2838.	0.0066	0.054
700.0	2656.	----	----	0.	1627.	----	A			0.0	0.694	0.00011	0.00046	0.0092
1.470	180.00	3318.8	22249.	0.	0.0	1521.3	P	0.418	1627.	1.080	0.663	2838.	0.0066	0.054
700.0	2656.	----	----	0.	1627.	----	A			0.0	0.694	0.00011	0.00046	0.0092

MISSION FUEL REQUIRED = 2673.97
RESERVE FUEL REQUIRED = 644.81
TOTAL FUEL REQUIRED = 3318.78

****

END OF SUCCESSFUL CASE

****

7.6.3 Coaxial Rotor Helicopter With Auxiliary Propulsion

The design mission profile is illustrated in Figure 7.7. The more interesting and unusual inputs are discussed for this case, while the more routine information is only listed. A complete copy of the program printout follows the description of the input data.

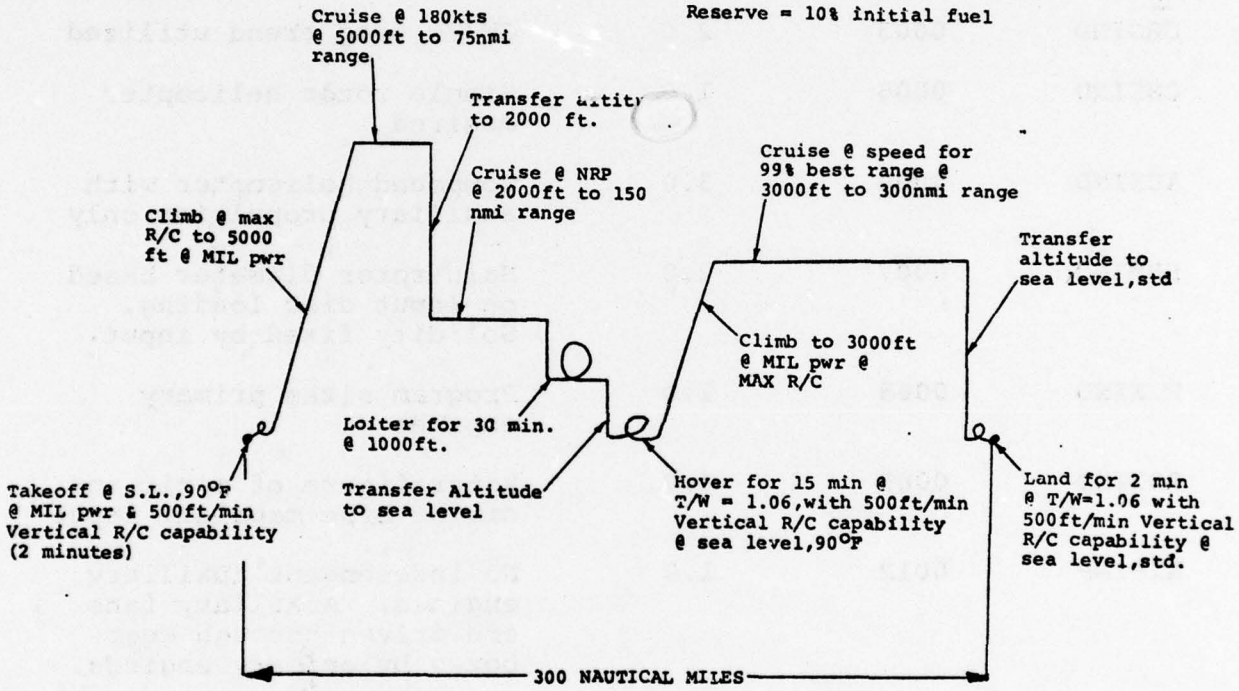

Figure 7.7. Design Mission - Sample Case 3

SAMPLE CASE NO. 3

GENERAL INFORMATION SHEET

VARIABLE	LOCATION	VALUE ASSIGNED	REMARKS
OPTIND	0001	1.0	Sizing run
OPTIONAL PRINT	0002	1.0	Detailed printout desired
DRGIND	0003	2.0	GW/Fe drag trend utilized
CNFIND	0005	1.0	Single rotor helicopter desired
AUXIND	0006	3.0	Compound helicopter with auxiliary propulsion only
RDMIND	0007	2.0	Main rotor diameter based on input disc loading. Solidity fixed by input.
FIXIND	0008	1.0	Program sizes primary engines
ROTIND	0009	4.0	Rotor figure of merit and cruise L/De maps are input
AIPINP	0012	1.0	No independent auxiliary engines. Auxiliary fans are driven through gear boxes by primary engines.
TRDIND	0015	0.0	No antitorque tail rotor on this design
HTIND	0018	2.0	Horizontal tail volume coefficient input
MRPIND	0019	0.0	Main rotor position on fuselage input by user
ESCIND	0022	2.0	Primary engines are sized for either takeoff or cruise
WG_o	0023	30000	First guess at design gross weight

VARIABLE	LOCATION	VALUE ASSIGNED	REMARKS
h_o	0024	0.0	Initial altitude — Normally 0.0 except for mission analysis
R_o	0025	0.0	Initial range — Normally 0.0 except for mission analysis
t_o	0026	0.0	Starting time — Normally 0.0 except for mission analysis
$h_{OPT_{IND}}$	0027	0.0	Cruise at specified altitude
M_{Mo}	0028	.443	Maximum operating Mach number
V_{Mo}	0029	260	Maximum operating equivalent airspeed knots
V_{DIVE}	0030	312	Dive speed - approximately equal to 1.2 x V_{Mo} in knots
M_{LF}	0031	3.0	Maneuver load factor
K_1	0032	1.111	Factor on mission fuel burned to give reserve fuel. 1.111 results in 10% of initial fuel for reserve
δW_f	0033	0.0	Fixed fuel increment for reserves or other use.
K_{FF}	0034	1.05	Increase basic engine SFC by 5 percent
SGTIND	0035	2.0	Takeoff — Sequence of design mission
	0036	3.0	Climb — Sequence of design mission
	0037	4.0	Cruise — Sequence of design mission
	0038	9.0	Transfer altitude — Sequence of design mission
	0039	4.0	Cruise — Sequence of design mission
	0040	9.0	Transfer altitude — Sequence of design mission
	0041	6.0	Loiter — Sequence of design mission
	0042	9.0	Transfer altitude — Sequence of design mission

VARIABLE	LOCATION	VALUE ASSIGNED	REMARKS	
SGTIND	0043	2.0	Hover	Sequence of design mission
	0044	3.0	Climb	
	0045	4.0	Cruise	
	0046	9.0	Transfer altitude	
	0047	2.0	Land	
	0048	100.0	End of Case	
Helicopter Dimensional Information Sheet				
AR_{HT}	0112	5.50	Horizontal tail aspect ratio	
ℓ'_{TH}	0113	.775	Ratio of horizontal tail moment arm to main rotor radius	
$(t/c)_{HT}$	0114	.150	Horizontal tail thickness/ chord ratio	
$\bar{V}_H$	0115	.020	Horizontal tail volume coefficient referred to main rotor diameter and tail arm.	
λ_H	0116	.660	Horizontal tail taper ratio	
$\Delta S_{WET}/S_P$	0120	0.0	Fuselage wetted area ratio	
ΔS_{WT}	0121	0.0	Incremental fuselage wetted area	
h_F	0122	8.17	Fuselage height	
W_F	0123	8.33	Fuselage width	
$(\ell/d)_p$	0124	1.12	Fineness ratio of nose	
$(\ell/d)_T$	0125	0.688	Fineness ratio of tail	
ℓ_c	0126	20.3	Constant diameter section length	

VARIABLE	LOCATION	VALUE ASSIGNED	REMARKS
ℓ_{RW}	0127	0.0	Length of ramp well
(X_M/ℓ_B)	0128	.40	Main rotor position aft of the nose as a fraction of main fuselage length
$(\ell_{TB}/\bar{d}_{TB})$	0129	2.28	Fineness ratio of tail boom
$(\bar{d}_{\overline{TT}}/\bar{d}_{TB})$	0130	0.205	Ratio of average tail boom tip diameter to average tail boom diameter
AR_{UT}	0135	1.5	Vertical tail aspect ratio
λ_{VT}	0136	0.50	Vertical tail taper ratio
$(t/c)_{VT}$	0137	.15	Thickness/chord ratio of vertical tail
K_Z	0139	6.7	Vertical position of the tail rotor center (relative to the vertical fin root chord) as a fraction of tail rotor radius. When TRDIND=0, (as in this example), vertical tail span is input into this location.
$(t/c)_{RF}$	0152	.800	Main rotor pylon root thickness/chord ratio
$(t/c)_{TF}$	0153	.600	Main rotor pylon tip thickness/chord ratio
AR_{FP}	0154	.210	Main rotor pylon aspect ratio
λ_{FP}	0155	.75	Forward rotor pylon taper ratio
h_{pl}	0156	3.58	Main rotor pylon height.

VARIABLE	LOCATION	VALUE ASSIGNED	REMARKS
Rotor Dimensional Data for Sizing Main Rotor			
Rotor Map No.	0170	123	Coaxial rotor helicotper figure of merit and cruise L/D_E rotor map
N_R	0172	1.0	Number of rotors
W/A	0173	15.0	Main rotor disc loading
σ_{MR}	0175	0.111	Main rotor solidity
b_{MR}	0176	6.0	Number of main rotor blades
θ_{TMR}	0177	-10.0	Main rotor twist (degrees)
Xc_{MR}	0178	.10	Main rotor blade cutout as a fraction of radius
X_{MR}	0179	.05	Main rotor blade attachment point as a fraction of radius
$(t/c)_{.25R}$	0180	.32	Rotor blade thickness/ chord at 25 percent radius
V_T	0181	650	Main rotor tip speed
V_{CEH1}	0191	1.60	Main rotor vertical rate of climb efficiency factors
V_{CEH2}	0192	0	
$K_{P_{CLIMB}}$	0193	.85	Helicopter forward flight climb efficiency
Rotor Dimensional Data for Sizing Tail Rotor			
$g_{MR/TR}$	0214	-.5	Gap between main and tail rotor disc (FT). When TRDIND=0, represents gap between main rotor disc and end of tail boom (FT). Negative number implies tail boom ends under the main rotor disc.
$C_{L_{FIN}}$	0216	0.0	Vertical tail fin operating cruise lift coefficient

VARIABLE	LOCATION	VALUE ASSIGNED	REMARKS
Primary Engine Sizing Information Sheet			
Primary Engine Cycle No.	0217	2.41	Primary engine selection
N_p	0219	2.0	Number of primary engines
XMSNIND	0220	0.0	Drive system ratings specified as fraction of primary engine installed power
SHP_{MRX}/SHP^*_{MR}	0221	1.02	Main rotor drive system is rated at 102% of main rotor design power
η_T	0223	0.98	Transmission efficiency
ΔSHP_{ACC}	0224	30.	Accessory power losses
SHP_{ARX}/SHP^*_{AUX}	0226	.46	Auxiliary propulsion drive system rating as a fraction of auxiliary propulsion system installed power. When no auxiliary engines are specified, this input specifies the auxiliary drive system is rated to 46% of main rotor design power
$H_{To(H)}$	0227	0.0	Design point hover altitude for engine sizing
$(T/W)_D$	0228	1.06	Configuration design point hover thrust/weight ratio
$\Delta T_{IN\ TO(H)}$	0229	31.0	Temperature increment in degrees above standard at altitude for engine sizing.

VARIABLE	LOCATION	VALUE ASSIGNED	REMARKS
$(N_{II}/N_{II_{MAX}})_{T.O.}$	0230	0.8237	Operating point for engine power turbine. Operating tip speed is computed from $V_{T_{OPERATING}} = V_T \left[\frac{N_{II}}{N_{II_{MAX}}}\right]\left[\frac{N_{II_{MAX}}}{N^*_{II}}\right]$ To operate at V_T = 625 ft/sec requires that $N_{II}/N_{II_{MAX}}$ be the reciprical of $\frac{N_{II_{MAX}}}{N_{II^*}}$
N_{PSD}	0231	0.0	Number of engines inoperative at hover design point conditions
SHP_E/SHP^*	0232	1.00	Engines sized to permit operation at 100% of maximum rated power
$(V_{R/C})_D$	0233	500.	500 ft/min vertical rate of climb capability required at hover design point.
POWIND	0234	2.0	Maximum engine rating for cruise engine sizing. For this example, normal rated power is the maximum rating to be used.
h_c	0235	0.0	Design point cruise altitude for engine sizing.
V_c	0236	250.	Design point cruise speed for engine sizing.
$\Delta T_{IN_{CE}}$	0237	0.	Temperature increment above standard for cruise engine sizing.

VARIABLE	LOCATION	VALUE ASSIGNED	REMARKS
$(N_{II}/N_{II_{MAX}})_C$	0238	.7389	Operating point for engine power turbine at design cruise conditions. Operating tip speed is computed from $V_{T_{OPERATING}} = V_T\left[\frac{N_{II}}{N_{II_{MAX}}}\right]\left[\frac{N_{II_{MAX}}}{N_{II}^*}\right]$ The rotor is slowed to 583 ft/sec for this example. $(N_{II}/N_{II_{MAX}})$ is computed from the above equation e.g. $\frac{N_{II}}{N_{II_{MAX}}} = \frac{V_{T_{OPERATING}}}{V_T\left(\frac{N_{II_{MAX}}}{N_{II}^*}\right)}$ $= \frac{583}{650(1.214)} = .7389$
$(T_{AUX}/T_{TOT})_C$	0239	1.00	100% of propulsive thrust provided by auxiliary propulsion at cruise condition for engine sizing.
$(N_{PSD})_C$	0241	0.0	No. of primary engines shut down during cruise (for engine sizing)
Propeller Data Required for Compound Helicopter Auxiliary Propulsion Information Sheet			
No. of Props.	0248	2.0	Two auxiliary propellers/ fans are used on this configuration
V_{TAR}	0249	900	Auxiliary propeller tip speed
DIA	0250	4.0	Diameter of auxiliary prop/fan is 4 ft.
X_{AR}	0251	.10	Prop/fan blade attachment point as a fraction of radius

VARIABLE	LOCATION	VALUE ASSIGNED	REMARKS
η_{TAUX}	0252	.96	Transmission efficiency of auxiliary drive system
$\eta_{P}IND$	0253	0.0	Table of prop/fan efficiencies are input
η_{P3}	0254	0.85	Prop/fan climb efficiency
η_{P5}	0255	0.60	Prop fan descent efficiency
AF/Blade	0257	169.0	Prop/fan activity factor per blade. For this example a 13 bladed 2200 total activity prop/fan was selected.
No. of Blades	0258	13.0	Number of prop/fan blades
No. of Pairs in η_{P4} Table	0261	3.0	Number of pairs in prop/fan efficiency table
Values of Mach No.	0262	0.0	Values of Mach Number in cruise efficiency table
	0263	0.5	
	0264	1.0	
Values of η_{P4}	0272	.60	Values of cruise efficiency
	0273	.75	
	0274	.60	

Helicopter Aerodynamics Information Sheet

GW/Fe	0312	2020	Drag trend constants derifed from data such as illustrated by Figure 4-27, Section 4.9.
K_{FED}	0313	0.561	

VARIABLE	LOCATION	VALUE ASSIGNED	REMARKS
Rotor Limits Information Sheet			
	0347 -0377		This case has been run using "dummy" rotor limit values (as explained in Section 7.3). For actual "dummy" values used, refer to the appropriate location on the output sheets.
Helicopter Weight Information Sheet			
	2601 -2673		This is fully explained in Section 4.11. Refer to the output sheets for the actual values used.
Takeoff, Hover, and Landing Information			
TOLIND	0461	2.0	Specify power fraction and vertical rate of climb
	0462	1.0	Specify required T/W for hover out of ground effect.
	0463	1.0	
ATMIND	0481	1.00	Standard atmosphere plus an incremental temperature
	0482	1.00	
	0483	0.0	Standard atmosphere
PEHF	0491	1.00	Power fraction - 100 percent of power available at these ambient conditions is being used.
ΔT_{IN}(°F)	0501	31.0	Incremental temperature above standard, in degrees.
	0502	31.0	
$V_{R/C}$(FPM)	0511	500.	500 ft/min vertical rate of climb capability desired
	0512	500.	
	0513	500.	
T/W	0522	1.06	Hover thrust/weight ratio specified
	0523	1.06	

VARIABLE	LOCATION	VALUE ASSIGNED	REMARKS
ΔT_H(HR)	0531	.0111	Time increments for takeoff, hover or landing computation in hours.
	0532	.050	
	0533	.0111	
$(N_{II}/N_{II_{MAX}})$ (Primary Engine)	0541	.8237	Operating point for engine power turbine during takeoff hover or landing.
	0542	.8237	
	0543	.8237	$\left(\frac{N_{II}}{N_{II_{MAX}}}\right) = \frac{V_{T_{OPERATING}}}{V_T\left(\frac{N_{II_{MAX}}}{N_{II}^*}\right)}$ $\frac{650}{650(1.214)} = .8237$
t_H(HR)	0551	.0333	Takeoff, hover, or landing total time in hours.
	0552	.250	
	0553	.0333	

Climb Information Sheet

CLMIND	0571	1.0	Maximum rate of climb desired
	0572	1.0	
ATMIND	0591	0.0	Atmosphere indicator. Standard atmosphere specified.
	0592	0.0	
Δh(FT)	0621	500.	Altitude increments for climb calculations.
	0622	300.	
POWIND	0631	1.0	Climb at maximum rate of climb, limited by military power available.
	0632	1.0	
h_{MAX}(FT)	0641	5000.	Final altitudes for climb
	0642	3000.	

VARIABLE	LOCATION	VALUE ASSIGNED	REMARKS
$(N_{II}/N_{II_{MAX}})$	0651	.8237	Operating point for engine turbine during climb.
(Primary Engine)	0652	.8237	$\left(\frac{N_{II}}{N_{II_{MAX}}}\right) = \frac{V_{T_{OPERATING}}}{V_T\left(\frac{N_{II_{MAX}}}{N_{II}^*}\right)} = .8237$
$\Delta fe_{CL}(FT^2)$	0661	.500	Incremental drag area in climb
	0662	.500	
$N_{PSD_{CL}}$	0681	0.0	Number of primary engines shut down during climb
	0682	0.0	
T_{AUX}/T_{TOT}	0691	.300	30% of required propulsive force provided by auxiliary fans.
	0692	.300	
Cruise Information Sheet			
CRSIND	0721	2.0	Cruise at constant true airspeed
	0722	1.0	Cruise at specified power setting
	0723	4.0	cruise at 99% best range speed
	0731	180.	Cruise at 180 knots T.A.S.
ATMIND	0741	0.0	Atmosphere indicator
	0742	0.0	Standard atmosphere
	0743	0.0	specified
ΔR(N.M.)	0771	15.0	Calculation increments
	0772	15.0	during cruise in
	0773	15.0	nautical miles
POWIND	0781	2.0	Cruise speed
	0782	2.0	by normal rated
	0783	2.0	primary engine power

VARIABLE	LOCATION	VALUE ASSIGNED	REMARKS
R_{MAX}(N.M.)	0791	75.0	Values of range
	0792	150.0	at end of each
	0793	300.0	cruise segment
$(N_{II}/N_{II_{MAX}})$ (Primary Engine)	0801	.8237	Operating point for engine power turbine during cruise.
	0802	.7389	
	0803	.8237	$\frac{N_{II}}{N_{II_{MAX}}} = \frac{V_{T_{OPERATING}}}{V_T\left(\frac{N_{II_{MAX}}}{N_{II}^*}\right)}$
$\Delta fe_{CR}(FT^2)$	0811	1.0	Increment in cruise
	0812	0.0	equivalent flat plate
	0813	1.0	area (FT^2)
$N_{PSD_{CR}}$	0831	0.0	Number of primary
	0832	0.0	engines shut down
	0333	0.0	in cruise
T_{AUX}/T_{TOT}	0841	1.0	100% of required
	0842	1.0	propulsive force is
	0843	1.0	provided by auxiliary prop/fans

Loiter Information Sheet

ATMIND	1031	0.0	Standard atmosphere specified
Δt_L (HR)	1061	.100	Time increments for loiter calculations

VARIABLE	LOCATION	VALUE ASSIGNED	REMARKS
$(N_{II}/N_{II_{MAX}})$ (Primary Engines)	1071	.8237	Operating point for primary engine power turbine during loiter. $\frac{N_{II}}{N_{II_{MAX}}} = \frac{V_{T_{OPERATING}}}{V_T\left(\frac{N_{II_{MAX}}}{N_{II}^*}\right)} = .8237$
t_L(HR)	1081	.500	30 minutes of loiter specified
$N_{PSD_{LOITER}}$	1101	0.0	Number of engines shut down
T_{AUX}/T_{TOT}	1111	.30	30% of required propulsive force is provided by auxiliary prop/fans.
$\Delta fe_L(FT^2)$	1131	.500	Increment in loiter equivalent flat plate drag area (FT^2)
Transfer Altitude Sheet			
h_{FINAL}(FT)	1181	2000.	Transfer altitude to these final values with no time, fuel or distance credits
	1182	1000.	
	1183	0.0	
	1184	0.0	
Primary Engine Cycle Data; Non-Standard Performance			
WDTIND	1201	0.0	No fuel flow cutoffs
N1IND	1202	0.0	No N_I cutoffs
N1θIND	1203	1.0	Referred N_I cutoff
N2IND	1204	2.0	Free turbine engine to be simulated
QIND	1205	1.0	Torque cutoff
RNOIND	1206	0.0	No Reynolds No. corrections

VARIABLE	LOCATION	VALUE ASSIGNED	REMARKS
$(N_I/\sqrt{\theta_1}/N_I^*)_{MAX}$	1222	1.115	Value for referred N_I limit
$(N_{II_{MAX}}/N_{II}^*)$	1223	1.214	Value for N_{II} cutoff referred to N_{II}^*
Q_{MAX}/Q^*	1224	1.00	Value of torque cutoff referred to value at sea level standard static condition

Primary Engine Cycle Information Sheet

1301 -1565	The engine cycle information are discussed in Section 4.4

Rotor Performance Map Information

3420 -4130	Information pertaining to the rotor performance maps are discussed in Sections 4.5 and 7.2

The sample case input and output follow.

COAXIAL HELICOPTER SIZING-SAMPLE CASE 3

H E S C O M P

HELICOPTER SIZING & PERFORMANCE COMPUTER PROGRAM B-91

THE FOLLOWING IS A CARD BY CARD REPRODUCTION OF THE INPUT DECK FOR THIS CASE

LOC. CORRESPONDS TO LOCATION NUMBER GIVEN ON INPUT SHEET
NUM STANDS FOR THE NUMBER OF SEQUENTIAL INPUT VALUES STARTING WITH LOC. (MAX. =5)
VAL EQUALS VALUE FOR VARIABLE CORRESPONDING TO LOC.
VAL1 VALUE CORRESPONDING TO LOC.+0001
VAL2 VALUE CORRESPONDING TO LOC.+0002
ETC.

LOC.	NUM	VAL	VAL1	VAL2	VAL3	VAL4
		NOTE : IN USING AUXILIARY ENGINES ; AUXILIARY ENGINE CYCLE INPUT LOCATIONS CAN BE CREATED BY PLACING A 66666 CARD IN FRONT AND BEHIND A STANDARD ENGINE CYCLE				
1201	5	0.0	0.0	1.0000	2.0000	1.0000
1206	1	0.0				
1222	3	1.1150	1.2140	1.0000		
1227	3	2.4100	0.15750	0.0		
1305	2	1725.0	1740.0			
1307	3	2500.0	2580.0	2660.0		
1310	1	8.0000				
1311	5	1625.0	1800.0	2100.0	2400.0	2650.0
1316	3	2900.0	3150.0	3400.0		
1319	1	5.0000				
1320	5	0.0	0.20000	0.40000	0.60000	0.70000
1326	5	0.0	0.0	0.0	0.0	0.0
1332	5	0.15600	0.16200	0.17000	0.20200	0.21400
1338	5	0.40600	0.43100	0.46100	0.52100	0.55100
1344	5	0.74000	0.77800	0.81600	0.90800	0.95900
1350	5	0.98800	1.0450	1.0960	1.2450	1.3140
1356	5	1.2300	1.3140	1.3880	1.5440	1.6230
1362	5	1.4500	1.5500	1.6440	1.8290	1.9180
1368	5	1.6300	1.7500	1.8600	2.0740	2.2120
1374	1	8.0000				
1375	5	1625.0	1800.0	2100.0	2400.0	2650.0
1380	3	2900.0	3150.0	3400.0		
1383	1	5.0000				
1384	5	0.0	0.20000	0.40000	0.60000	0.70000
1390	5	0.48000E-01	0.48000E-01	0.48000E-01	0.48000E-01	0.48000E-01
1396	5	0.10500	0.10600	0.10700	0.10800	0.10900
1402	5	0.20500	0.21000	0.21400	0.22500	0.23000
1408	5	0.32400	0.33400	0.34300	0.35700	0.36800
1414	5	0.42100	0.43400	0.44500	0.47700	0.49400
1420	5	0.50300	0.52400	0.54300	0.58900	0.61200
1426	5	0.57400	0.60300	0.63400	0.69000	0.71900
1432	5	0.64500	0.68800	0.72600	0.79100	0.82500
1438	1	8.0000				
1439	5	1625.0	1800.0	2100.0	2400.0	2650.0
1444	3	2900.0	3150.0	3400.0		
1447	1	5.0000				
1448	5	0.0	0.20000	0.40000	0.60000	0.70000
1454	5	0.65400	0.65400	0.65400	0.65400	0.65400

1460	5	0.75000	0.74900	0.74800	0.74800	0.74700
1466	5	0.85600	0.85500	0.85400	0.85300	0.85200
1472	5	0.93800	0.93700	0.93600	0.93500	0.93400
1478	5	0.99800	0.99700	0.99500	0.99400	0.99300
1484	5	1.0540	1.0530	1.0520	1.0500	1.0490
1490	5	1.1080	1.1060	1.1050	1.1030	1.1020
1496	5	1.1580	1.1570	1.1560	1.1530	1.1520
1502	1	8.0000				
1503	5	1625.0	1800.0	2100.0	2400.0	2650.0
1508	3	2900.0	3150.0	3400.0		
1511	1	5.0000				
1512	5	0.0	0.20000	0.40000	0.60000	0.70000
1518	5	0.28700	0.29200	0.30600	0.33900	0.34500
1524	5	0.52700	0.53400	0.54200	0.55900	0.56400
1530	5	0.75100	0.75800	0.76800	0.78600	0.79800
1536	5	0.89900	0.90900	0.91800	0.93600	0.94600
1542	5	0.99400	1.0010	1.0110	1.0150	1.0400
1548	5	1.0680	1.0770	1.0890	1.1090	1.1240
1554	5	1.1310	1.1430	1.1520	1.1730	1.1860
1560	5	1.1800	1.1920	1.2020	1.2230	1.2370
4101	5	0.0	2.1500	4.0000	5.6000	6.1000
4106	5	5.8500	5.2000	4.4000	3.5000	2.5500
4111	5	0.0	1.7000	3.1100	4.3000	4.8900
4116	5	4.8900	4.5800	4.0500	3.4000	2.7500
4121	5	0.0	1.3000	2.5000	3.2500	3.5500
4126	5	3.5500	3.4500	3.2500	2.9000	2.5000
3420	1	123.00				
3421	3	6.0000	0.11100	-10.000		
3424	1	10.000				
3429	5	0.20000E-01	0.40000E-01	0.50000E-01	0.60000E-01	0.70000E-01
3430	5	0.80000E-01	0.12000	0.16000	0.20000	0.24000
3435	1	3.0000				
3436	3	0.50000	0.65000	0.80000		
3442	5	0.36800	0.59800	0.64800	0.68100	0.70600
3447	5	0.72300	0.74700	0.74100	0.72100	0.70500
3452	5	0.36800	0.59800	0.64800	0.68100	0.70600
3457	5	0.72300	0.74700	0.74100	0.72100	0.70500
3462	5	0.36800	0.59800	0.64800	0.68100	0.70600
3467	5	0.72300	0.74700	0.74100	0.72100	0.70500
3502	1	6.0000				
3503	5	-0.20000	-0.10000E 00	-0.50000E-01	0.0	0.50000E-01
3508	1	0.10000E 00				
3509	1	10.000				
3510	5	0.0	0.20000E-01	0.40000E-01	0.60000E-01	0.80000E-01
3515	5	0.10000E 00	0.12000	0.14000	0.16000	0.18000
3520	1	10.000				
3521	5	0.10000E-01	0.50000E-01	0.10000E 00	0.15000	0.21000
3526	5	0.30000	0.35000	0.47000	0.60000	0.91000
3531	5	0.0	0.60000	0.91000	1.0800	1.1000
3536	5	0.70000	0.42000	0.20000	0.11000	0.90000E-01
3541	5	0.0	1.8600	3.0600	3.8100	3.9900
3546	5	2.6100	1.8500	1.2500	0.82000	0.42000
3551	5	0.0	2.6500	4.3600	5.6000	5.9000
3556	5	4.2100	3.2900	2.4500	1.7100	1.0000
3561	5	0.0	2.8000	5.0000	6.3000	6.6500
3566	5	5.4500	4.6000	3.6900	2.8100	1.8100
3571	5	0.0	2.7000	4.9000	6.2000	6.5500
3576	5	6.1500	5.5500	4.8000	3.9000	2.9000
3581	5	0.0	2.2200	4.0000	5.2100	5.9900
3586	5	6.3200	6.3200	6.1100	5.7200	5.2100

3591	5	0.0	1.9000	3.4000	4.6000	5.4500
3596	5	6.0000	6.2500	6.3500	6.3500	6.2500
3601	5	0.0	1.2000	2.3000	3.2500	4.0500
3606	5	4.7000	5.1500	5.4500	5.5000	5.1500
3611	5	0.0	1.0000	1.9400	2.7500	3.3400
3616	5	3.8200	4.1900	4.4500	4.5000	4.4000
3621	5	0.0	0.85000	1.6000	2.3000	2.9000
3626	5	3.4500	3.8500	4.0500	4.1000	3.9000
3631	5	0.0	0.51000	0.85000	0.91000	0.80000
3636	5	0.60000	0.38000	0.22000	0.11000	0.60000E-01
3641	5	0.0	1.5600	2.6500	2.6100	2.1800
3646	5	1.7000	1.3100	1.0500	0.78000	0.52000
3651	5	0.0	2.6500	4.2600	4.5500	4.0000
3656	5	3.3100	2.9000	2.4500	1.9000	1.2200
3661	5	0.0	3.2500	5.3800	6.0000	5.7100
3666	5	5.0800	4.4200	3.7800	3.0400	2.1900
3671	5	0.0	3.5000	6.0000	7.3500	7.4500
3676	5	6.9500	6.3000	5.5000	4.5500	3.5000
3681	5	0.0	3.2800	6.1100	8.2000	9.7000
3686	5	9.9400	9.1500	8.1500	7.1800	6.1000
3691	5	0.0	3.0500	5.7500	8.0900	9.8000
3696	5	10.500	10.200	9.4500	8.4500	7.5500
3701	5	0.0	2.0000	3.6000	4.8500	5.9000
3706	5	6.6000	7.0500	7.2500	7.0500	6.3000
3711	5	0.0	1.5800	2.6200	3.6200	4.3500
3716	5	4.9000	5.3000	5.5000	5.4200	5.3500
3721	5	0.0	1.0500	2.0000	2.8500	3.5500
3726	5	4.1500	4.6000	4.8000	4.7500	4.4000
3731	5	0.0	0.38000	0.57000	0.60000	0.49000
3736	5	0.40000	0.32000	0.21000	0.16000	0.10000F 00
3741	5	0.0	1.4800	2.5000	2.5000	2.0000
3746	5	1.7000	1.4500	1.2000	0.91000	0.56000
3751	5	0.0	2.4600	4.0500	4.4100	3.9000
3756	5	3.4000	2.9200	2.4500	1.9000	1.2600
3761	5	0.0	3.1600	5.2500	5.8000	5.5000
3766	5	4.8500	4.2200	3.5800	2.8200	2.0500
3771	5	0.0	3.5000	6.0000	7.1500	7.1000
3776	5	6.5500	5.8500	5.0500	4.1500	3.1500
3781	5	0.0	3.3500	6.1400	8.1000	8.9000
3786	5	8.6800	8.0000	7.1400	6.1000	5.0500
3791	5	0.0	3.0500	5.7500	7.9500	9.1500
3796	5	9.2000	8.7000	7.9000	7.0000	6.0000
3801	5	0.0	2.1500	4.0000	5.6000	6.8000
3806	5	7.6000	8.0000	7.7500	6.9500	5.9500
3811	5	0.0	1.6000	3.0800	4.3800	5.4800
3816	5	6.3400	6.8900	7.0800	6.8800	6.4500
3821	5	0.0	1.3000	2.5000	3.6000	4.4000
3826	5	5.0000	5.4000	5.5500	5.3500	5.0000
3831	5	0.0	0.40000	0.56000	0.55000	0.45000
3836	5	0.38000	0.26000	0.18000	0.11000	0.80000E-01
3841	5	0.0	1.4300	2.0600	2.2000	1.7900
3846	5	1.4800	1.1400	0.91000	0.75000	0.52000
3851	5	0.0	2.3900	3.5700	3.7900	3.3600
3856	5	2.7900	2.3200	2.0000	1.6100	1.0800
3861	5	0.0	3.1000	4.7300	5.2500	4.9100
3866	5	4.3200	3.7100	3.1400	2.5000	1.6800
3871	5	0.0	3.5000	5.9000	6.7000	6.5000
3876	5	5.9500	5.3500	4.5500	3.7000	2.7000
3881	5	0.0	3.3500	6.2200	7.9100	8.6000
3886	5	8.2900	7.6000	6.7200	5.7100	4.5800

3891	5	0.0	3.0500	5.7500	7.8500	8.8500
3896	5	5.8000	8.2000	7.4000	6.5000	5.5000
3901	5	0.0	2.1500	4.0000	5.6000	6.8000
3906	5	7.4500	7.4500	6.9000	6.0000	5.0000
3911	5	0.0	1.6500	3.1100	4.4000	5.4500
3916	5	6.2100	6.6900	6.6500	5.9800	4.9500
3921	5	0.0	1.3000	2.5000	3.6000	4.4000
3926	5	5.0000	5.2500	5.2500	5.0000	4.6000
3931	5	0.0	0.41000	0.63000	0.55000	0.37000
3936	5	0.25000	0.19000	0.13000	0.10000E 00	0.90000E-01
3941	5	0.0	1.4100	1.9900	1.9800	1.6500
3946	5	1.4200	1.1900	0.98000	0.71000	0.49000
3951	5	0.0	2.3500	3.3900	3.4100	3.1900
3956	5	2.8200	2.3800	1.9000	1.4200	0.93000
3961	5	0.0	3.1000	4.5000	4.7900	4.5000
3966	5	4.0300	3.5900	2.8500	2.1900	1.5100
3971	5	0.0	3.5000	5.6500	6.3000	6.0000
3976	5	5.5000	4.9000	4.1500	3.3000	2.3500
3981	5	0.0	3.3400	6.0000	7.4200	7.6000
3986	5	7.3000	6.7200	5.9200	4.9000	3.7500
3991	5	0.0	3.0500	5.7500	7.3000	8.0000
3996	5	7.8000	7.1500	6.3500	5.4000	4.4500
4001	5	0.0	2.1500	4.0000	5.6000	6.7000
4006	5	6.9500	6.5000	5.7000	4.7500	3.7000
4011	5	0.0	1.7000	3.2500	4.5000	5.5000
4016	5	5.9100	5.8000	5.4600	4.9000	4.1800
4021	5	0.0	1.3000	2.5000	3.6000	4.2500
4026	5	4.4500	4.4500	4.3000	4.0000	3.6500
4031	5	0.0	0.55000	0.65000	0.50000	0.32000
4036	5	0.21000	0.18000	0.10000E 00	0.80000E-01	0.60000E-01
4041	5	0.0	1.7600	2.3300	2.0000	1.5800
4046	5	1.2000	0.93000	0.79000	0.63000	0.50000
4051	5	0.0	2.8000	3.8300	3.5900	2.9400
4056	5	2.4000	2.0000	1.6800	1.4000	0.98000
4061	5	0.0	3.3200	4.8100	4.7200	4.1700
4066	5	3.5900	3.0800	2.6500	2.1400	1.4300
4071	5	0.0	3.5000	5.4000	5.8000	5.5000
4076	5	5.0500	4.4500	3.7500	2.9500	2.0500
4081	5	0.0	3.3200	5.6000	6.5300	6.5500
4086	5	6.1200	5.4900	4.7000	3.8500	2.9000
4091	5	0.0	3.0500	5.4500	6.6000	6.7000
4096	5	6.2500	5.6000	4.8500	4.0000	3.1500
1	5	1.0000	1.0000	2.0000	0.0	1.0000
6	4	3.0000	2.0000	1.0000	4.0000	
12	1	1.0000				
15	1	0.0				
18	2	2.0000	0.0			
22	1	2.0000				
23	4	30000.	0.0	0.0	0.0	
27	1	0.0				
28	3	0.44300	260.00	312.00		
31	1	3.0000				
32	3	1.1111	0.0	1.0500		
35	5	2.0000	3.0000	4.0000	9.0000	4.0000
40	5	9.0000	6.0000	9.0000	2.0000	3.0000
45	4	4.0000	9.0000	2.0000	100.00	
112	5	5.5000	0.77500	0.15000	0.20000E-01	0.66000
120	2	0.0	0.0			
122	5	8.1700	8.3300	1.1200	0.68800	20.300
127	4	0.0	0.40000	2.2800	0.20500	

135	3	1.5000	0.50000	0.15000		
139	1	6.7000				
142	4	0.0	0.0	0.0	0.0	
146	5	0.0	0.0	0.0	0.0	0.0
151	1	0.0				
152	5	0.80000	0.60000	0.21000	0.75000	3.5800
170	1	123.00				
172	2	1.0000	15.000			
175	5	0.11100	6.0000	-10.000	0.10000E 00	0.50000E-01
180	2	0.32000	650.00			
191	2	1.6000	0.0			
193	2	0.85000	0.85000			
214	1	-0.50000				
216	1	0.0				
217	1	2.4100				
219	1	2.0000				
220	2	0.0	1.0200			
223	2	0.98000	30.000			
226	1	0.46000				
227	5	0.0	1.0600	31.000	0.82370	0.0
232	2	1.0000	500.00			
234	5	2.0000	0.0	250.00	0.0	0.73890
239	1	1.0000				
241	1	0.0				
243	5	2.0000	900.00	4.0000	0.10000E 00	0.96000
253	1	0.0				
254	2	0.85000	0.60000			
257	2	169.00	13.000			
261	1	3.0000				
262	3	0.0	0.50000	1.0000		
272	3	0.60000	0.75000	0.60000		
312	2	2020.0	0.56100			
2602	3	2475.0	864.00	6328.0		
2605	3	0.0	0.0	200.00		
2608	5	1.0000	1.0000	1.0000	1.0000	1.0000
2613	5	17.500	30.000	22.200	0.50000E-02	0.0
2618	4	75.000	0.10000E 00	25.000	60.000	
2622	5	125.00	2.0000	0.40000E-01	0.80000	0.0
2627	5	1.0000	0.0	0.0	2.0000	0.0
2632	5	0.0	270.00	0.0	0.0	0.0
2637	5	52.800	2.2000	73.200	0.17700	1.0000
2642	5	0.0	14.200	1.0000	1.0000	250.00
2647	5	3.0000	0.0	250.00	3.0000	0.80000E-01
2652	2	0.17000	0.0			
2654	5	1.0000	0.80000	1.0000	1.0000	1.0000
2659	5	1.0000	1.0000	1.0000	1.0000	1.0000
2664	1	1.0000				
2665	5	1.2200	4.1600	1.0000	1.0000	1.0000
2670	3	1.0000	1.0000	1.0000		
347	2	3.0000	3.0000			
349	3	-1.0000	0.0	1.0000		
354	3	0.0	0.50000	1.0000		
361	3	1.0000	1.0000	1.0000		
368	3	1.0000	1.0000	1.0000		
375	3	1.0000	1.0000	1.0000		
461	3	2.0000	1.0000	1.0000		
481	3	1.0000	1.0000	0.0		
491	1	1.0000				
501	2	31.000	31.000			
511	3	500.00	500.00	500.00		

522	2	1.0600	1.0600	
531	3	0.11100E-01	0.50000E-01	0.11100E-01
541	3	0.82370	0.82370	0.82370
551	3	0.33300E-01	0.25000	0.33300E-01
571	2	1.0000	1.0000	
591	2	0.0	0.0	
621	2	500.00	300.00	
631	2	1.0000	1.0000	
641	2	5000.0	3000.0	
651	2	0.82370	0.82370	
661	2	0.50000	0.50000	
681	2	0.0	0.0	
691	2	0.30000	0.30000	
721	3	2.0000	1.0000	4.0000
731	1	180.00		
741	3	0.0	0.0	0.0
771	3	15.000	15.000	15.000
781	3	2.0000	2.0000	2.0000
791	3	75.000	150.00	300.00
801	3	0.82370	0.73890	0.82370
811	3	1.0000	0.0	1.0000
831	3	0.0	0.0	0.0
841	3	1.0000	1.0000	1.0000
1031	1	0.0		
1061	1	0.10000E 00		
1071	1	0.82370		
1081	1	0.50000		
1101	1	0.0		
1111	1	0.30000		
1131	1	0.50000		
1181	4	2000.0	1000.0	0.0 0.0
1309	1	2580.0		

WG = 0.300000E 05 WFA = 0.250980E 00 WFR = 0.250980E 00

WG = 0.300000E 05 WFA = 0.318680E 04 WFR = 0.532525E 04

WG = 0.330549E 05 WFA = 0.470212E 04 WFR = 0.578159E 04

COAXIAL HELICOPTER SIZING-SAMPLE CASE 3

H E S C O M P

HELICOPTER SIZING & PERFORMANCE COMPUTER PROGRAM 8-91

SINGLE ROTOR AUXILIARY PROPULSION HELICOPTER

S I Z E D A T A THIS RUN CONVERGED IN 3 ITERATIONS

GROSS WEIGHT = 36169. LB

FUSELAGE

LF	LENGTH(BODY+TAILBOOM)	41.3 FT.
LC	LENGTH(CABIN)	20.3 FT.
LB	LENGTH(BODY)	35.2 FT.
LTB	LENGTH(TAILBOOM)	6.1 FT.
XM	FWD. ROTOR LOCATION	14.1 FT.
WF	WIDTH	8.3 FT.
SF	WETTED AREA	861.3 SQ. FT.

WING - NO WING USED

HOR. TAIL

ARHT	ASPECT RATIO	5.500
SHT	AREA	97.7 SQ. FT.
BHT	SPAN	23.2 FT.
CBARHT	MEAN CHORD	4.2 FT.
LAMBDA H	TAPER RATIO	0.660
(T/C)HT	THICKNESS/CHORD	0.150
LTH	HOR. TAIL ARM	21.5 FT.

VERT. TAIL

ARVT	ASPECT RATIO	1.500
SVT	AREA	29.9 SQ. FT.
BVT	SPAN	6.7 FT.
CBARVT	MEAN CHORD	4.5 FT.
LAMBDA VT	TAPER RATIO	0.500
ZTR	TAIL ROTOR(VERT.) LOCATION	0.3 FT.
ZETAVT	TAIL ROTOR/VERT. TAIL OVERLAP RATIO	0.0
(T/C)VT	THICKNESS/CHORD	0.150

MAIN ROTOR PYLON

AR	ASPECT RATIO	0.210
SFP	WETTED AREA	168.0 SQ. FT.
FAFP	FRONTAL AREA	43.6 SQ. FT.
HP1	HEIGHT	3.6 FT.
CBARFP	MEAN CHORD	17.0 FT.
LAMBDA FP	TAPER RATIO	0.750
(T/C)R	ROOT THICKNESS/CHORD	0.800
(T/C)T	TIP THICKNESS/CHORD	0.600

PRIMARY ENGINE NACELLE

LN	LENGTH	0.0 FT.
DN	MEAN DIAMETER	0. FT.
SN	WETTED AREA(TOTAL FOR ALL ENGINES)	0.0 SQ. FT.

AUXILIARY INDEPENDENT ENGINE NACELLE -NO AUXILIARY INDEPENDENT ENGINE USED

PROPELLER(AUXILIARY PROPULSION)

DAR	DIAMETER	4.0 FT.
AF	ACTIVITY FACTOR PER BLADE	169.0
SIGAR	SOLIDITY	0.897
NRA	NO. OF PROPELLERS	2.
NO. BLADES	NO. OF BLADES/PROP	13.
VTIP	TIP SPEED	900. FT./SEC

MAIN ROTOR

DMR	DIAMETER	55.4 FT.
SIGMR	SOLIDITY	0.111
WG/A	DISC LOADING	15.0 LB/SQ. FT.
CT/SIGMA	THRUST COEFF./SOLIDITY	0.0
NR	NO. OF ROTORS	1.
NO. BLADES	NO. OF BLADES/ROTOR	6.
THETA	BLADE TWIST	-10.000 DEG.
XC	BLADE CUTOUT/RADIUS RATIO	0.100
VTIP	TIP SPEED	650. FT./SEC.

- NO TAIL ROTOR USED

COAXIAL HELICOPTER SIZING-SAMPLE CASE 3

H E S C O M P

HELICOPTER SIZING & PERFORMANCE COMPUTER PROGRAM B-91

W E I G H T S D A T A IN LBS

	MLF	MANEUVER LOAD FACTOR	3.000	
	ULF	ULTIMATE LOAD FACTOR	4.500	
PROPULSION GROUP				
	WPRG	TOTAL MAIN ROTOR GROUP	6727.	
K12	WPRB	MAIN ROTOR BLADE (PER ROTOR)	2604.	
K13	WPH	MAIN ROTOR HUB (PER ROTOR)	4123.	
	WBF	BLADE FOLDING(PER ROTOR)	0.	
K15	WAR	AUXILIARY PROPULSION ROTOR GROUP	371.	
	WDS	DRIVE SYSTEM	4241.	
K16	WPDS	MAIN ROTOR DRIVE SYSTEM	3923.	
K20	WTRDS	TAIL ROTOR DRIVE SYSTEM	0.	
K17	WADS	AUXILIARY PROPULSION DRIVE SYSTEM	318.	
K18	WEP	PRIMARY ENGINES	1601.	
K19	WEA	AUXILARY ENGINES	0.	
	WPEI	PRIMARY ENGINE INSTALLATION	272.	
	WAEI	AUXILIARY ENGINE INSTALLATION	0.	
	WFS	FUEL SYSTEM	500.	
DELTA	WP	PROPULSION GROUP WEIGHT INCREMENT	0.	
	WP	TOTAL PROPULSION GROUP WEIGHT		13712.
STRUCTURES GROUP				
K8	WW	WING	0.	
	WTG	TAIL GROUP	195.	
K9	WHT	HOR. TAIL	195.	
K14	WTR	TAIL ROTOR	0.	
K6	WB	FUSELAGE	3053.	
K7	WLG	LANDING GEAR	1447.	
	WNG	NOSE GEAR	289.	
	WMG	MAIN GEAR	1157.	
	WTES	TOTAL ENGINE SECTION	276.	
	WPES	PRIMARY ENGINE SECTION	276.	
	WAES	AUXILIARY ENGINE SECTION	0.	
DELTA	WST	STRUCTURE WEIGHT INCREMENT	200.	
	WST	TOTAL STRUCTURE WEIGHT		5171.
FLIGHT CONTROLS GROUP				
	WPFC	PRIMARY FLIGHT CONTROLS	1142.	
	WCC	COCKPIT CONTROLS	76.	
K1	WRC	MAIN ROTOR CONTROLS	490.	
K2	WSC	MAIN ROTOR SYSTEMS CONTROLS	320.	
K3	WFW	FIXED WING CONTROLS	181.	
	WTM	TILT MECHANISM	0.	
	WSAS	SAS	75.	
	WAFC	AUXILIARY FLIGHT CONTROLS	232.	
K4	WRCA	AUX. PROPULSION ROTOR CONTROLS	37.	
K5	WSCA	AUX. PROPULSION ROTOR SYS. CONTROLS	135.	

	WMC	MISCELLANEOUS CONTROLS	60.
	DELTA WFC	CONTROL WEIGHT INCREMENT	0.
	WFC	TOTAL CONTROL WEIGHT	1374.
	WFE	WEIGHT OF FIXED EQUIPMENT	2475.
	WE	WEIGHT EMPTY	22731.
	WFUL	FIXED USEFUL LOAD	864.
	OWE	OPERATING WEIGHT EMPTY	23595.
	WPL	PAYLOAD	6328.
	(WF)A	FUEL	6246.
	WG	GROSS WEIGHT	36169.

COAXIAL HELICOPTER SIZING-SAMPLE CASE 3

H E S C O M P

HELICOPTER SIZING & PERFORMANCE COMPUTER PROGRAM B-91

R O T O R D A T A

FIXED MAIN ROTOR SOLIDITY INPUT

COAXIAL HELICOPTER SIZING-SAMPLE CASE 3

H E S C O M P
HELICOPTER SIZING & PERFORMANCE COMPUTER PROGRAM B-91

P R O P U L S I O N D A T A
PRIMARY PROPULSION CYCLE NO. 2.410
TURBOSHAFT ENGINE

2. ENGINES

BHP*P MAX. STANDARD S.L. STATIC H.P. 10163. H.P.

ENGINE SIZED FOR CRUISE AT VC = 250. KNOTS,
HC = 0. FT, TEMPERATURE = 59.00 DEG.F.
AND 0.0 ENGINES INOPERATIVE.

NO AUX. INDEPENDENT ENGINE CYCLE SELECTED

MAIN ROTOR DRIVE SYSTEM RATING 10366. H.P.

XMSN SIZED AT 102. PERCENT OF TOTAL PRIMARY ENGINE INSTALLED POWER
(MAX. STANDARD S.L. STATIC H.P.)

AUXILIARY PROPULSION DRIVE SYSTEM RATING 4675. H.P.

XMSN SIZED AT 46. PERCENT OF TOTAL PRIMARY ENGINE INSTALLED POWER
(MAX. STANDARD S.L. STATIC H.P.)

H E S C O M P
HELICOPTER SIZING & PERFORMANCE COMPUTER PROGRAM B-91

A E R O D Y N A M I C S D A T A

FE	TOTAL EFFECTIVE FLATPLATE AREA	16.494	SQFT
SWET	TOTAL WETTED AREA	1292.	SQFT
CBARF	MEAN SKIN FRICTION COEFF.	0.012766	

D R A G B R E A K D O W N IN SQFT.

FEW	WING FE	0.0
FEF	FUSELAGE FE	16.494
FEFP	FORWARD(MAIN) ROTOR PYLON FE	0.0
FEAP	AFT ROTOR PYLON FE	0.0
FEMRH	MAIN ROTOR HUB(S) FE	0.0
FETRH	TAIL ROTOR HUB FE	0.0
FEVT	VERTICAL TAIL FE	0.0
FEHT	HORIZONTAL TAIL FE	0.0
FEN	PRIMARY ENGINE NACELLE FE	0.0
FENI	AUX. INDEPENDENT CRUISE ENG. NAC. FE	0.0
FENS	AUX. INDPENDENT CRUISE ENG. STRUT FE	0.0
DELTA FE	INCREMENTAL FE	0.0

A E R O D Y N A M I C C O E F F .

A5		16.49419
A6		0.0
A7		0.0
A8		0.0
A9		0.24095
E	WING LIFT EFFICIENCY FACTOR	0.0
EVT	VERTICAL TAIL LIFT EFFICIENCY FACTOR	0.88071

COAXIAL HELICOPTER SIZING-SAMPLE CASE 3

H E S C O M P
HELICOPTER SIZING & PERFORMANCE COMPUTER PROGRAM 8-91

MISSION PERFORMANCE DATA

TAKEOFF, HOVER, OR LAND AT PETF = 1.000 FOR 0.033 HRS.

TIME (HRS)	RANGE (N.M.)	FUEL USED (LBS)	WEIGHT (LBS.)	PRES. ALT. (FT)	TAS (KTS)	PRIM. TURB. TEMP. (R)	PRIM. ENG. CODE	PRIM. ENG. PEHF	TOTAL FUEL FLOW (LBS/HR)	THRUST TO WEIGHT	FM	BHP	CT	CT/SIGMA
M.ROTOR VTIP	M.ROTOR RHP	T.ROTOR VTIP (FPS)	T.ROTOR RHP	VRC RHP	PRIM.ENG FUEL FLOW (LBS/HR)	AUX.ENG FUEL FLOW (LBS/HR)	ROTLIM CODE			DELDCM	FMI	CPPRO	CPIND	CDO
0.0	0.0	0.0	36169.	0.	0.0	2580.1	T	1.000	3716.	1.278	0.729	8062.	0.0202	0.182
650.0	7529.	*****	0.	343.	3716.		A			0.0	0.729	0.0	0.0	0.0
0.011	0.0	41.3	36128.	0.	0.0	2580.1	T	1.000	3716.	1.278	0.729	8048.	0.0202	0.182
650.0	7515.	*****	0.	342.	3716.		A			0.0	0.729	0.0	0.0	0.0
0.022	0.0	82.5	36086.	0.	0.0	2580.1	T	1.000	3716.	1.278	0.730	8033.	0.0202	0.182
650.0	7501.	*****	0.	342.	3716.		A			0.0	0.730	0.0	0.0	0.0
0.033	0.0	123.8	36045.	0.	0.0	2580.1	T	1.000	3716.	1.278	0.730	8018.	0.0202	0.182
650.0	7487.	*****	0.	341.	3716.		A			0.0	0.730	0.0	0.0	0.0
0.033	0.0	123.8	36045.	0.	0.0	2580.1	T	1.000	3716.	1.278	0.730	8018.	0.0202	0.182
650.0	7487.	*****	0.	341.	3716.		A			0.0	0.730	0.0	0.0	0.0

CLIMB TO 5000. FT. WITH MAXIMUM R/C AT MILITARY ENGINE RATING
** TAS(AND EAS) IS THE HORIZONTAL COMPONENT OF THE FLIGHT PATH SPEED

TIME (HRS)	RANGE (N.M.)	FUEL USED (LBS)	WEIGHT (LBS.)	PRES. ALT. (FT)	TAS (KTS)	PRIM. TURB. TEMP. (R)	PRIM. ENG. CODE	PRIM. ENG. PEHF	FAS (KTS)	MU	CT PRIME OVER SIGMA	ALPHA D/L (DEG)	GAMMA (DEG)	BHP	R/C (FPM)
M.ROTOR VTIP (FPS)	M.ROTOR RHP	T.ROTOR VTIP (FPS)	T.ROTOR RHP	PROP VTIP (FPS)	PRIM.ENG FUEL FLOW (LBS/HR)	BHP AUX	ETAP PROP	TALX/T	AUX. ENG. FUEL FLOW (LBS/HR)	AUX. TURB. TEMP.	AUX. ENG. CODE	AUX. ENG. PEHF	AUX. ENG. BHP OR THRUST		
CPPRO	CPIND	CPPAR	CPNUD	CDO	DELCDS	DELCDM	CXR	ROTLIM CODE	J	CP	CT	CLW	CDW	RN	

0.033	0.0	123.8	36045.	0.	89.1	2580.0	T	1.000	89.1	0.234	0.135	-0.5	33.0	9818.	5922.
650.0	1937.	*****	0.	----	4335.	47.	0.850	0.300	----	----	----	----		----	
0.0	0.0	0.0	0.0	0.0	0.0	0.0	0.000135	A	----	----	----	----	----	----	
0.035	0.13	129.9	36039.	500.	79.1	2580.0	T	1.000	78.5	0.208	0.137	-0.4	35.1	9591.	5711.
650.0	2002.	*****	0.	----	4256.	32.	0.850	0.300	----	----	----	----		----	
0.0	0.0	0.0	0.0	0.0	0.0	0.0	0.000107	A	----	----	----	----	----	----	
0.035	0.24	136.1	36033.	1000.	79.1	2580.0	T	1.000	78.0	0.208	0.139	-0.4	34.5	9457.	5583.
650.0	2036.	*****	0.	----	4199.	32.	0.850	0.300	----	----	----	----		----	
0.0	0.0	0.0	0.0	0.0	0.0	0.0	0.000107	A	----	----	----	----	----	----	
0.036	0.36	142.3	36027.	1500.	79.1	2580.0	T	1.000	77.4	0.208	0.141	-0.4	34.0	9361.	5483.
650.0	2072.	*****	0.	----	4150.	31.	0.850	0.300	----	----	----	----		----	
0.0	0.0	0.0	0.0	0.0	0.0	0.0	0.000107	A	----	----	----	----	----	----	
0.037	0.49	148.6	36020.	2000.	79.1	2580.0	T	1.000	76.8	0.208	0.143	-0.4	33.5	9265.	5382.
650.0	2109.	*****	0.	----	4102.	31.	0.850	0.300	----	----	----	----		----	
0.0	0.0	0.0	0.0	0.0	0.0	0.0	0.000107	A	----	----	----	----	----	----	
0.041	0.61	155.0	36014.	2500.	91.1	2580.0	T	1.000	87.8	0.239	0.145	-0.5	29.6	9169.	5311.
650.0	2092.	*****	0.	----	4054.	46.	0.850	0.300	----	----	----	----		----	
0.0	0.0	0.0	0.0	0.0	0.0	0.0	0.000141	A	----	----	----	----	----	----	
0.042	0.75	161.4	36008.	3000.	92.1	2580.0	T	1.000	88.1	0.242	0.147	-0.5	29.1	9118.	5244.
650.0	2129.	*****	0.	----	4017.	47.	0.850	0.300	----	----	----	----		----	
0.0	0.0	0.0	0.0	0.0	0.0	0.0	0.000144	A	----	----	----	----	----	----	
0.044	0.90	167.7	36001.	3500.	93.1	2580.0	T	1.000	88.4	0.244	0.149	-0.5	28.3	9026.	5143.
650.0	2159.	*****	0.	----	3969.	48.	0.850	0.300	----	----	----	----		----	
0.0	0.0	0.0	0.0	0.0	0.0	0.0	0.000147	A	----	----	----	----	----	----	
0.045	1.05	174.2	35995.	4000.	93.1	2580.0	T	1.000	87.8	0.244	0.152	-0.5	27.9	8936.	5040.
650.0	2214.	*****	0.	----	3922.	47.	0.850	0.300	----	----	----	----		----	
0.0	0.0	0.0	0.0	0.0	0.0	0.0	0.000147	A	----	----	----	----	----	----	
0.047	1.21	180.7	35988.	4500.	94.1	2580.0	T	1.000	88.0	0.247	0.154	-0.5	27.1	8844.	4934.
650.0	2260.	*****	0.	----	3875.	48.	0.850	0.300	----	----	----	----		----	
0.0	0.0	0.0	0.0	0.0	0.0	0.0	0.000151	A	----	----	----	----	----	----	
0.049	1.37	187.2	35982.	5000.	95.1	2580.0	T	1.000	88.3	0.250	0.156	-0.5	26.4	8757.	4828.
650.0	2311.	*****	0.	----	3828.	49.	0.850	0.300	----	----	----	----		----	
0.0	0.0	0.0	0.0	0.0	0.0	0.0	0.000154	A	----	----	----	----	----	----	

CRUISE AT 180.0 KNOTS TAS, LIMITED BY NORMAL ENGINE RATING

TIME (HRS)	RANGE (N.M.)	FUEL USED (LBS)	WEIGHT (LBS.)	PRES. ALT. (FT)	TAS (KTS)	PRIM. TURB. TEMP. (R)	PRIM. ENG. CODE	PRIM. ENG. PEHF	EAS (KTS)	ML	CT PRIME OVER SIGMA	ALPHA D/L (DEG)	SPEC. RANGE (NMPP)	BHP
M.ROTOR VTIP (FPS)	M.ROTOR RHP	T.ROTOR VTIP (FPS)	T.ROTOR RHP	PROP VTIP (FPS)	PRIM.ENG FUEL FLOW (LBS/HR)	BHP AUX	ETAP PROP	TAUX/T	AUX. ENG. FUEL FLOW (LBS/HR)	AUX. TURB. TEMP.	AUX. ENG. CODE	AUX. ENG. PEHF		AUX. ENG. BHP OR THRUST
CPPAR	CPINO	CPPAR	CPNUO	CDO	DELCDS	DELCOM	CXR	ROTLIM CODE	J	CP	CT	CLW	CDW	RN

0.049	1.37	187.2	35982.	5000.	180.0	2149.5	P	0.519	167.1	0.467	0.155	0.0	.07794	4656.
650.0	3196.	*****	0.	----	2309.	1365.	0.683	1.000	----	----	----	----		----
0.0	0.0	0.0	0.0	0.0	0.0	0.0	0.0	A	----	----	----	----	----	----
0.132	16.37	379.6	35789.	5000.	180.0	2146.2	P	0.515	167.1	0.467	0.155	0.0	.07837	4619.
650.0	3159.	*****	0.	----	2297.	1365.	0.683	1.000	----	----	----	----		----
0.0	0.0	0.0	0.0	0.0	0.0	0.0	0.0	A	----	----	----	----	----	----
0.216	31.37	571.0	35598.	5000.	180.0	2142.9	P	0.511	167.1	0.467	0.154	0.0	.07880	4582.
650.0	3123.	*****	0.	----	2284.	1365.	0.683	1.000	----	----	----	----		----
0.0	0.0	0.0	0.0	0.0	0.0	0.0	0.0	A	----	----	----	----	----	----
0.299	46.37	761.4	35408.	5000.	180.0	2139.7	P	0.507	167.1	0.467	0.153	0.0	.07922	4546.
650.0	3088.	*****	0.	----	2272.	1365.	0.683	1.000	----	----	----	----		----
0.0	0.0	0.0	0.0	0.0	0.0	0.0	0.0	A	----	----	----	----	----	----
0.382	61.37	950.7	35218.	5000.	180.0	2136.6	P	0.503	167.1	0.467	0.152	0.0	.07964	4511.
650.0	3053.	*****	0.	----	2260.	1365.	0.683	1.000	----	----	----	----		----
0.0	0.0	0.0	0.0	0.0	0.0	0.0	0.0	A	----	----	----	----	----	----
0.458	75.00	1121.9	35047.	5000.	180.0	2133.8	P	0.500	167.1	0.467	0.151	0.0	.08002	4479.
650.0	3023.	*****	0.	----	2249.	1365.	0.683	1.000	----	----	----	----		----
0.0	0.0	0.0	0.0	0.0	0.0	0.0	0.0	A	----	----	----	----	----	----

TRANSFER ALTITUDE TO 2000. FT.

TIME (HRS)	RANGE (N.M.)	FUEL USED (LBS)	WEIGHT (LBS.)	PRES. ALT. (FT)
0.458	75.00	1121.9	35047.	5000.
0.458	75.00	1121.9	35047.	2000.

CRUISE AT NORMAL ENGINE RATING

TIME (HRS)	RANGE (N.M.)	FUEL USED (LBS)	WEIGHT (LBS.)	PRES. ALT. (FT)	TAS (KTS)	PRIM. TURB. TEMP. (R)	PRIM. ENG. CODE	PRIM. ENG. PEHF	EAS (KTS)	MU	CT PRIME OVER SIGMA	ALPHA D/L (DEG)	SPEC. RANGE (NMPP)	BHP
M.ROTOR VTIP (FPS)	M.ROTOR RHP	T.ROTOR VTIP (FPS)	T.ROTOR RHP	PROP VTIP (FPS)	PRIM.ENG FUEL FLOW (LBS/HR)	BHP AUX	ETAP PROP	TAUX/T	AUX. ENG. FUEL FLOW (LBS/HR)	AUX. TURB. TEMP.	AUX. ENG. CODE	AUX. ENG. PEHF		AUX. ENG. RHP OR THRUST
CPPRO	CPIND	CPPAR	CPNUD	CDO	DELCDS	DELCDM	CXR	ROTLIM CODE	J	CP	CT	CLW	CDW	RN
0.458	75.00	1121.9	35047.	2000.	251.6	2500.0	T	0.963	244.3	0.728	0.172	0.0	.06430	8962.
583.1	5151.	*****	0.	----	3913.	3676.	0.715	1.000	----	----	----	----		----
0.0	0.0	0.0	0.0	0.0	0.0	0.0	0.0	A	----	----	----	----	----	----
0.518	90.00	1355.1	34814.	2000.	253.0	2500.0	T	0.963	245.6	0.732	0.171	0.0	.06462	8967.
583.1	5101.	*****	0.	----	3915.	3732.	0.715	1.000	----	----	----	----		----
0.0	0.0	0.0	0.0	0.0	0.0	0.0	0.0	A	----	----	----	----	----	----

0.577	105.00	1587.3	34582.	2000.	254.3	2500.0	T	0.964	246.9	0.736	0.170	0.0	.06493	8972.
583.1	5052.	*****	0.	----	3916.	3786.	0.716	1.000	----	----	----	----		----
0.0	0.0	0.0	0.0	0.0	0.0	0.0	0.0	A	----	----	----	----	----	----
0.636	120.00	1818.3	34351.	2000.	255.5	2500.0	T	0.965	248.1	0.740	0.168	0.0	.06522	8977.
583.1	5005.	*****	0.	----	3918.	3840.	0.717	1.000	----	----	----	----		----
0.0	0.0	0.0	0.0	0.0	0.0	0.0	0.0	A	----	----	----	----	----	----
0.694	135.00	2048.3	34121.	2000.	257.8	2500.0	T	0.966	250.3	0.746	0.167	0.0	.06575	9054.
583.1	4986.	*****	0.	----	3921.	3936.	0.718	1.000	----	----	----	----		----
0.0	0.0	0.0	0.0	0.0	0.0	0.0	0.0	A	----	----	----	----	----	----
0.753	150.00	2276.4	33892.	2000.	257.8	2500.0	T	0.966	250.3	0.746	0.166	0.0	.06575	8979.
583.1	4913.	*****	0.	----	3921.	3936.	0.718	1.000	----	----	----	----		----
0.0	0.0	0.0	0.0	0.0	0.0	0.0	0.0	A	----	----	----	----	----	----

TRANSFER ALTITUDE TO 1000. FT.

TIME (HRS)	RANGE (N.M.)	FUEL USED (LBS)	WEIGHT (LBS.)	PRES. ALT. (FT)
0.753	150.00	2276.4	33892.	2000.
0.753	150.00	2276.4	33892.	1000.

ENTER FOR 0.500 HRS.

TIME (HRS)	RANGE (N.M.)	FUEL USED (LBS)	WEIGHT (LBS.)	PRES. ALT. (FT)	TAS (KTS)	PRIM. TURB. TEMP. (R)	PRIM. ENG. CODE	PRIM. ENG. PEHF	EAS (KTS)	MU	CT PRIME OVER SIGMA	ALPHA D/L (DEG)	TOTAL FUEL FLOW (LBS/HR)	BHP
M.ROTOR VTIP (FPS)	M.ROTOR RHP	T.ROTOR VTIP (FPS)	T.ROTOR RHP	PROP VTIP (FPS)	PRIM.ENG FUEL FLOW (LBS/HR)	BHP AUX	ETAP PROP	TAUX/T	AUX. ENG. FUEL FLOW (LBS/HR)	ALX. TURB. TEMP.	AUX. ENG. CODE	AUX. ENG. PEHF		AUX. ENG. RHP OR THRUST
CPPRO	CPIND	CPPAR	CPNUD	CDO	DELCDS	DELCDM	CXR	RCTLIM CODE	J	CP	CT	CLW	CDW	RN
0.753	150.00	2276.4	33892.	1000.	77.8	1931.4	P	0.200	76.7	0.202	0.131	-0.4	1565.	1895.
650.0	1789.	*****	0.	----	1565.	39.	0.635	0.300	----	----	----	----		----
0.0	0.0	0.0	0.0	0.0	0.0	0.0	0.000101	A	----	----	----	----	----	----
0.853	150.00	2432.9	33736.	1000.	77.8	1929.9	P	0.199	76.7	0.202	0.130	-0.4	1559.	1878.
650.0	1772.	*****	0.	----	1559.	39.	0.635	0.300	----	----	----	----		----
0.0	0.0	0.0	0.0	0.0	0.0	0.0	0.000101	A	----	----	----	----	----	----
0.953	150.00	2588.8	33580.	1000.	77.8	1928.4	P	0.197	76.7	0.202	0.130	-0.4	1554.	1861.
650.0	1756.	*****	0.	----	1554.	39.	0.635	0.300	----	----	----	----		----
0.0	0.0	0.0	0.0	0.0	0.0	0.0	0.000101	A	----	----	----	----	----	----
1.053	150.00	2744.2	33425.	1000.	78.8	1927.0	P	0.195	77.7	0.205	0.129	-0.4	1549.	1847.
651.0	1741.	*****	0.	----	1549.	40.	0.636	0.300	----	----	----	----		----
0.0	0.0	0.0	0.0	0.0	0.0	0.0	0.000103	A	----	----	----	----	----	----
1.153	150.00	2899.2	33270.	1000.	78.8	1925.6	P	0.194	77.7	0.205	0.128	-0.4	1544.	1831.
651.0	1725.	*****	0.	----	1544.	40.	0.636	0.300	----	----	----	----		----

0.0	0.0	0.0	0.0	0.0	0.0	0.0	0.000103	A	----	----	----	----	----	----
1.253	150.00	3053.6	33115.	1000.	78.8	1924.2	P	0.192	77.7	0.205	0.128	-0.4	1539.	1815.
650.0	1709.	*****	0.	----	1539.	40.	0.636	0.300	----	----	----	----		----
0.0	0.0	0.0	0.0	0.0	0.0	0.0	0.000103	A	----	----	----	----	----	----

TRANSFER ALTITUDE TO 0. FT.

TIME (HRS)	RANGE (N.M.)	FUEL USED (LBS)	WEIGHT (LBS.)	PRES. ALT. (FT)
1.253	150.00	3053.6	33115.	1000.
1.253	150.00	3053.6	33115.	0.

TAKEOFF, HOVER, OR LAND AT T/W = 1.060 FOR 0.250 HRS.

TIME (HRS)	RANGE (N.M.)	FUEL USED (LBS)	WEIGHT (LBS.)	PRES. ALT. (FT)	TAS (KTS)	PRIM. TURB. TEMP. (R)	PRIM. ENG. CODE	PRIM. ENG. PEHF	TOTAL FUEL FLOW (LBS/HR)	THRUST TO WEIGHT	FM	BHP	CT	CT/SIGMA
M.ROTOR VTIP	M.ROTOR RHP	T.ROTOR VTIP (FPS)	T.ROTOR RHP	VRC RHP	PRIM.ENG FUEL FLOW (LBS/HR)	AUX.ENG FUEL FLOW (LBS/HR)	ROTLIM CODE			DELDCM	FMI	CPPRO	CPIND	CDO
1.253	150.00	3053.6	33115.	0.	0.0	2336.8	P	0.659	2713.	1.060	0.746	5323.	0.0154	0.138
650.0	4873.	*****	0.	314.	2713.	----	A			0.0	0.746	0.0	0.0	0.0
1.303	150.00	3189.3	32980.	0.	0.0	2334.2	P	0.655	2702.	1.060	0.746	5290.	0.0153	0.138
650.0	4843.	*****	0.	312.	2702.	----	A			0.0	0.746	0.0	0.0	0.0
1.353	150.00	3324.4	32844.	0.	0.0	2331.6	P	0.651	2691.	1.060	0.746	5258.	0.0152	0.137
650.0	4813.	*****	0.	311.	2691.	----	A			0.0	0.746	0.0	0.0	0.0
1.403	150.00	3458.9	32710.	0.	0.0	2329.0	P	0.648	2681.	1.060	0.746	5226.	0.0152	0.137
650.0	4783.	*****	0.	310.	2681.	----	A			0.0	0.746	0.0	0.0	0.0
1.453	150.00	3593.0	32576.	0.	0.0	2326.4	P	0.644	2670.	1.060	0.746	5195.	0.0151	0.136
650.0	4753.	*****	0.	308.	2670.	----	A			0.0	0.746	0.0	0.0	0.0
1.503	150.00	3726.5	32442.	0.	0.0	2323.9	P	0.640	2660.	1.060	0.746	5163.	0.0151	0.136
650.0	4723.	*****	0.	307.	2660.	----	A			0.0	0.746	0.0	0.0	0.0
1.503	150.00	3726.5	32442.	0.	0.0	2323.9	P	0.640	2660.	1.060	0.746	5163.	0.0151	0.136
650.0	4723.	*****	0.	307.	2660.	----	A			0.0	0.746	0.0	0.0	0.0

CLIMB TO 3000. FT. WITH MAXIMUM R/C AT MILITARY ENGINE RATING
** TAS(AND EAS) IS THE HORIZONTAL COMPONENT OF THE FLIGHT PATH SPEED

TIME (HRS)	RANGE (N.M.)	FUEL USED (LBS)	WEIGHT (LBS.)	PRES. ALT. (FT)	TAS (KTS)	PRIM. TURB. TEMP. (R)	PRIM. ENG. CODE	PRIM. ENG. PEHF	EAS (KTS)	CT PRIME OVER SIGMA ML	ALPHA D/L (DEG)	GAMMA (DEG)	BHP	R/C (FPM)
M.ROTOR VTIP (FPS)	M.ROTOR RHP	T.ROTOR VTIP (FPS)	T.ROTOR RHP	PROP VTIP (FPS)	PRIM.ENG FUEL FLOW (LBS/HR)	BHP AUX	ETAP PROP	TAUX/T	AUX. ENG. FUEL FLOW (LBS/HR)	AUX. TURB. TEMP.	AUX. ENG. CODE	AUX. ENG. PEHF	AUX. ENG. BHP OR THRUST	

CPPRO	CPIND	CPPAR	CPNUD	CDO	DELCDS	DELCDM	CXR	RCTLIM CODE	J	CP	CT	CLW	CDW	RN	
1.503	150.00	3726.5	32442.	0.	64.8	2580.0	T	1.000	64.8	0.171	0.122	-0.3	45.9	9794.	6882.
650.0	1592.	*****	0.	----	4330.	18.	0.850	0.300	----	----	----	----		----	
0.0	0.0	0.0	0.0	0.0	0.0	0.0	0.000072	A	----	----	----	----	----	----	
1.503	150.05	3729.7	32439.	300.	64.8	2580.0	T	1.000	64.5	0.171	0.123	-0.3	44.9	9535.	6652.
650.0	1605.	*****	0.	----	4253.	18.	0.850	0.300	----	----	----	----		----	
0.0	0.0	0.0	0.0	0.0	0.0	0.0	0.000072	A	----	----	----	----	----	----	
1.504	150.10	3732.9	32436.	600.	65.8	2580.0	T	1.000	65.2	0.173	0.124	-0.3	44.2	9478.	6592.
650.0	1618.	*****	0.	----	4224.	19.	0.850	0.300	----	----	----	----		----	
0.0	0.0	0.0	0.0	0.0	0.0	0.0	0.000074	A	----	----	----	----	----	----	
1.505	150.15	3736.1	32433.	900.	65.8	2580.0	T	1.000	64.9	0.173	0.125	-0.3	44.0	9424.	6536.
650.0	1631.	*****	0.	----	4196.	18.	0.850	0.300	----	----	----	----		----	
0.0	0.0	0.0	0.0	0.0	0.0	0.0	0.000074	A	----	----	----	----	----	----	
1.505	150.20	3739.3	32430.	1200.	66.8	2580.0	T	1.000	65.6	0.176	0.126	-0.3	43.3	9367.	6475.
650.0	1645.	*****	0.	----	4167.	19.	0.850	0.300	----	----	----	----		----	
0.0	0.0	0.0	0.0	0.0	0.0	0.0	0.000076	A	----	----	----	----	----	----	
1.506	150.25	3742.5	32426.	1500.	66.8	2580.0	T	1.000	65.3	0.176	0.127	-0.3	43.0	9313.	6418.
650.0	1660.	*****	0.	----	4139.	19.	0.850	0.300	----	----	----	----		----	
0.0	0.0	0.0	0.0	0.0	0.0	0.0	0.000076	A	----	----	----	----	----	----	
1.507	150.30	3745.7	32423.	1800.	67.8	2580.0	T	1.000	66.0	0.179	0.129	-0.3	42.4	9256.	6357.
650.0	1674.	*****	0.	----	4110.	20.	0.850	0.300	----	----	----	----		----	
0.0	0.0	0.0	0.0	0.0	0.0	0.0	0.000079	A	----	----	----	----	----	----	
1.508	150.36	3748.9	32420.	2100.	67.8	2580.0	T	1.000	65.7	0.179	0.130	-0.3	42.1	9202.	6298.
650.0	1690.	*****	0.	----	4082.	19.	0.850	0.300	----	----	----	----		----	
0.0	0.0	0.0	0.0	0.0	0.0	0.0	0.000079	A	----	----	----	----	----	----	
1.509	150.41	3752.2	32417.	2400.	68.8	2580.0	T	1.000	66.4	0.181	0.131	-0.3	41.4	9145.	6237.
650.0	1705.	*****	0.	----	4053.	20.	0.850	0.300	----	----	----	----		----	
0.0	0.0	0.0	0.0	0.0	0.0	0.0	0.000081	A	----	----	----	----	----	----	
1.510	150.47	3755.4	32413.	2700.	69.8	2580.0	T	1.000	67.1	0.184	0.132	-0.3	40.7	9091.	6177.
650.0	1721.	*****	0.	----	4025.	21.	0.850	0.300	----	----	----	----		----	
0.0	0.0	0.0	0.0	0.0	0.0	0.0	0.000083	A	----	----	----	----	----	----	
1.510	150.53	3758.7	32410.	3000.	69.8	2580.0	T	1.000	66.8	0.184	0.133	-0.3	40.5	9037.	6118.
650.0	1738.	*****	0.	----	3997.	21.	0.850	0.300	----	----	----	----		----	
0.0	0.0	0.0	0.0	0.0	0.0	0.0	0.000083	A	----	----	----	----	----	----	

CRUISE AT SPEED FOR 99 PER CENT BEST RANGE WITH HEADWIND OF 0.0 KNOTS

TIME (HRS)	RANGE (N.M.)	FUEL USED (LBS)	WEIGHT (LBS.)	PRES. ALT. (FT)	TAS (KTS)	PRIM. TURB. TEMP. (R)	PRIM. ENG. CODE	PRIM. ENG. PERF	EAS (KTS)	MU	CT PRIME OVER SIGMA	ALPHA D/L (DEG)	SPEC. RANGE (NMPP)	BHP
M.ROTOR	M.ROTOR	T.ROTOR	T.ROTOR	PROP	PRIM.ENG	BHP	ETAP	AUX. ENG.	ALX. TURB.	AUX. ENG.	AUX. ENG.			AUX. ENG. BHP

VTIP (FPS)	RHP	VTIP (FPS)	RHP	VTIP (FPS)	FUEL FLOW (LBS/HR)	AUX	PROP	TALX/T	FUEL FLOW (LBS/HR)	TEMP.	CODE	PEHF		OR THRUST
CPPRO	CPIND	CPPAR	CPMUD	CDO	DELCDS	DELCDM	CXR	ROTLIM CODE	J	CP	CT	CLW	CDW	RN
1.510	150.53	3758.7	32410.	3000.	191.3	2131.2	P	0.480	183.0	0.497	0.132	0.0	.08292	4497.
650.0	2684.	*****	0.	----	2308.	1728.	0.688	1.000	----	----	----	----		----
0.0	0.0	0.0	0.0	0.0	0.0	0.0	0.0	A	----	----	----	----	----	----
1.589	165.53	3939.6	32229.	3000.	190.8	2127.8	P	0.476	182.5	0.495	0.131	0.0	.08322	4454.
650.0	2655.	*****	0.	----	2294.	1715.	0.687	1.000	----	----	----	----		----
0.0	0.0	0.0	0.0	0.0	0.0	0.0	0.0	A	----	----	----	----	----	----
1.667	180.53	4119.8	32049.	3000.	190.8	2126.0	P	0.473	182.5	0.495	0.130	0.0	.08348	4433.
650.0	2634.	*****	0.	----	2287.	1715.	0.687	1.000	----	----	----	----		----
0.0	0.0	0.0	0.0	0.0	0.0	0.0	0.0	A	----	----	----	----	----	----
1.746	195.53	4299.5	31869.	3000.	190.3	2122.7	P	0.469	182.0	0.494	0.130	0.0	.08377	4390.
650.0	2605.	*****	0.	----	2273.	1703.	0.687	1.000	----	----	----	----		----
0.0	0.0	0.0	0.0	0.0	0.0	0.0	0.0	A	----	----	----	----	----	----
1.825	210.53	4478.6	31690.	3000.	190.3	2121.1	P	0.467	182.0	0.494	0.129	0.0	.08403	4370.
650.0	2585.	*****	0.	----	2266.	1703.	0.687	1.000	----	----	----	----		----
0.0	0.0	0.0	0.0	0.0	0.0	0.0	0.0	A	----	----	----	----	----	----
1.904	225.52	4657.1	31512.	3000.	189.8	2117.8	P	0.462	181.6	0.493	0.128	0.0	.08431	4328.
650.0	2566.	*****	0.	----	2252.	1690.	0.687	1.000	----	----	----	----		----
0.0	0.0	0.0	0.0	0.0	0.0	0.0	0.0	A	----	----	----	----	----	----
1.983	240.53	4835.0	31334.	3000.	189.8	2116.2	P	0.460	181.6	0.493	0.127	0.0	.08456	4308.
650.0	2537.	*****	0.	----	2245.	1690.	0.687	1.000	----	----	----	----		----
0.0	0.0	0.0	0.0	0.0	0.0	0.0	0.0	A	----	----	----	----	----	----
2.062	255.53	5012.4	31156.	3000.	189.3	2113.0	P	0.456	181.1	0.492	0.127	0.0	.08485	4267.
650.0	2509.	*****	0.	----	2232.	1677.	0.687	1.000	----	----	----	----		----
0.0	0.0	0.0	0.0	0.0	0.0	0.0	0.0	A	----	----	----	----	----	----
2.141	270.53	5189.2	30980.	3000.	189.3	2111.5	P	0.454	181.1	0.492	0.126	0.0	.08509	4248.
650.0	2490.	*****	0.	----	2226.	1677.	0.687	1.000	----	----	----	----		----
0.0	0.0	0.0	0.0	0.0	0.0	0.0	0.0	A	----	----	----	----	----	----
2.220	285.53	5365.5	30803.	3000.	188.8	2108.4	P	0.450	180.6	0.490	0.125	0.0	.08537	4208.
650.0	2463.	*****	0.	----	2212.	1664.	0.686	1.000	----	----	----	----		----
0.0	0.0	0.0	0.0	0.0	0.0	0.0	0.0	A	----	----	----	----	----	----
2.297	300.00	5535.0	30634.	3000.	188.8	2106.9	P	0.448	180.6	0.490	0.125	0.0	.08560	4190.
650.0	2446.	*****	0.	----	2206.	1664.	0.686	1.000	----	----	----	----		----
0.0	0.0	0.0	0.0	0.0	0.0	0.0	0.0	A	----	----	----	----	----	----

TRANSFER ALTITUDE TC 0. FT.

TIME (HRS)	RANGE (N.M.)	FUEL USED (LBS)	WEIGHT (LBS.)	PRES. ALT. (FT)
2.297	300.00	5535.0	30634.	3000.
2.297	300.00	5535.0	30634.	0.

TAKEOFF, HOVER, OR LAND AT T/W = 1.060 FOR 0.033 HRS.

TIME (HRS)	RANGE (N.M.)	FUEL USED (LBS)	WEIGHT (LBS.)	PRES. ALT. (FT)	TAS (KTS)	PRIM. TURB. TEMP. (R)	PRIM. ENG. CODE	PRIM. ENG. PEHP	TOTAL FUEL FLOW (LBS/HR)	THRUST TO WEIGHT	FM	BHP	CT	CT/SIGMA
M.ROTOR VTIP	M.ROTOR RHP	T.ROTOR VTIP (FPS)	T.ROTOR RHP	VRC RHP	PRIM.ENG FUEL FLOW (LBS/HR)	AUX.ENG FUEL FLOW (LBS/HR)	ROTLIM CODE			DELDCM	FMI	CPPRO	CPIND	CDO
2.297	300.00	5555.0	30634.	0.	0.0	2169.0	P	0.495	2482.	1.060	0.747	4618.	0.0134	0.121
650.0	4206.	*****	0.	290.	2482.	----	A			0.0	0.747	0.0	0.0	0.0
2.305	300.00	5562.5	30606.	0.	0.0	2168.6	P	0.494	2480.	1.060	0.747	4612.	0.0134	0.121
650.0	4200.	*****	0.	290.	2480.	----	A			0.0	0.747	0.0	0.0	0.0
2.314	300.00	5590.1	30579.	0.	0.0	2168.1	P	0.494	2478.	1.060	0.747	4606.	0.0134	0.121
650.0	4195.	*****	0.	290.	2478.	----	A			0.0	0.747	0.0	0.0	0.0
2.330	300.00	5617.6	30551.	0.	0.0	2167.7	P	0.493	2477.	1.060	0.747	4600.	0.0134	0.120
650.0	4189.	*****	0.	289.	2477.	----	A			0.0	0.747	0.0	0.0	0.0

MISSION FUEL REQUIRED = 5617.57
RESERVE FUEL REQUIRED = 624.11
TOTAL FUEL REQUIRED = 6241.68

****

END OF SUCCESSFUL CASE

****

REFERENCES

1. Schoen, A. H. and Wisniewski, J. S., User's Manual for VASCOMP II, THE V/STOL AIRCRAFT SIZING AND PERFORMANCE COMPUTER PROGRAM, Boeing Vertol Company, Report D8-0375, Volume VI, Rev. 2, September 1973.

2. Low, E. M. II, SHORTCUT PERFORMANCE METHODOLOGY, Boeing Vertol Company, IOM 8-7444-1-119, 22 October 1969.

3. Low, E. M. II, WATFOR PROGRAMS FOR PERFORMANCE DETERMINATION, Boeing Vertol Company, IOM 8-7444-1-188, 18 August 1971.

4. Mills, S., INCORPORATION OF ROTOR-ROTOR INTERFERENCE DATA FROM UHM TESTS INTO SHORTCUT METHODOLOGY, Boeing Vertol Company, IOM 8-7444-1-173, 9 March 1971.

5. Lynn, R. R., et al, TAIL ROTOR DESIGN, Part I - Aerodynamics, AHS Journal, Volume 15, No. 4, October 1970.

6. Weisner, W. and Kohler, G., DESIGN GUIDELINES FOR TAIL ROTORS, Boeing Vertol Company, Report D210-10687-1, September 1973.

7. Gabriel, E. A., DRAG ESTIMATION OF V/STOL AIRCRAFT Boeing Vertol Company, Report D8-2194-1, July 1969.

8. Julian, D., HLH HUB DRAG REVIEW, Boeing Vertol Company, IOM 8-7444-1-200, 26 April 1972.

9. MIL-C-5011A, Military Specification: STANDARD AIRCRAFT CHARACTERISTICS AND PERFORMANCE CHARTS, PILOTED AIRCRAFT, November 5, 1961.

10. Borst, H. V., A SHORT METHOD TO PROPELLER PERFORMANCE, Curtiss-Wright Corporation, Propeller Division.

11. Federal Aviation Regulations, Part 25, AIRWORTHINESS STANDARDS: TRANSPORT CATEGORY AIRPLANES, Federal Aviation Agency, Washington, D.C.

12. Livingston, C. L. and Murphy, M. R., FLYING QUALITIES CONSIDERATIONS IN THE DESIGN AND DEVELOPMENT OF THE HUEY COBRA, AHS Journal, Vol. 14, #1, January 1969.

13. Brown, E. L. and Schmidt, P. S., THE EFFECT OF HELICOPTER PITCHING VELOCITY ON ROTOR LIFT CAPABILITY, AHS Journal, Vol. 8, #4, October 1963.

14. Drees, J. M. and McGuigan, M. J., HIGH SPEED HELICOPTERS AND COMPOUNDS IN MANEUVERS AND GUSTS, Proceedings of 21st Annual National Forum of AHS, May 1965.

15. Drees, J. M., ANALYTICAL STUDY OF HELICOPTER GUST RESPONSE AND HIGH FORWARD SPEEDS, AAVLABS TR69-1, September 1969.