AD/A-002 860

A STRUCTURAL WEIGHT ESTIMATION PROGRAM (SWEEP) FOR AIRCRAFT. VOLUME VI - WING AND EMPENNAGE MODULE. APPENDIX C: PROGRAM FLOW CHARTS, OVERLAYS (9.0) AND (10,0)

G. Hayase

Rockwell International Corporation

Prepared for:

Aeronautical Systems Division

June 1974

DISTRIBUTED BY:

NTIS

National Technical Information Service
U. S. DEPARTMENT OF COMMERCE

Best
Available
Copy

AD/A002 860

SECURITY CLASSIFICATION OF THIS PAGE (When Data Entered)

REPORT DOCUMENTATION PAGE

READ INSTRUCTIONS BEFORE COMPLETING FORM

1. REPORT NUMBER
ASD/XR 74-10

2. GOVT ACCESSION NO.

3. RECIPIENT'S CATALOG NUMBER

4. TITLE (and Subtitle)
A Structural Weight Estimation Program (SWEEP) for Aircraft - Volume VI - Wing and Empennage Module

5. TYPE OF REPORT & PERIOD COVERED

6. PERFORMING ORG. REPORT NUMBER

7. AUTHOR(s)
G. Hayase

8. CONTRACT OR GRANT NUMBER(s)
F33615-71-C-1922

9. PERFORMING ORGANIZATION NAME AND ADDRESS
Rockwell International Corp, L.A. Aircraft Div
Los Angeles International Airport
Los Angeles, California 90009

10. PROGRAM ELEMENT, PROJECT, TASK AREA & WORK UNIT NUMBERS
FX2826-71-01876/C093

11. CONTROLLING OFFICE NAME AND ADDRESS
Deputy for Development Planning
Air Force Systems Command
Wright-Patterson Air Force Base, Ohio

12. REPORT DATE
June 1974

13. NUMBER OF PAGES
2653

14. MONITORING AGENCY NAME & ADDRESS (if different from Controlling Office)

15. SECURITY CLASS. (of this report)
Unclassified

15a. DECLASSIFICATION/DOWNGRADING SCHEDULE

16. DISTRIBUTION STATEMENT (of this Report)
Approved for public release; distribution unlimited.

17. DISTRIBUTION STATEMENT (of the abstract entered in Block 20, if different from Report)

18. SUPPLEMENTARY NOTES

Reproduced by
NATIONAL TECHNICAL INFORMATION SERVICE
US Department of Commerce
Springfield, VA. 22151

19. KEY WORDS (Continue on reverse side if necessary and identify by block number)
weight estimation, structural weights, integrated computer programs, preliminary weight estimation, first-order weight estimations, aircraft structure weights, aircraft structural weight optimization, flutter optimization program, structural synthesis

20. ABSTRACT (Continue on reverse side if necessary and identify by block number)

Three computer programs were written with the objective of predicting the structural weight of aircraft through analytical methods. The first program, the structural weight estimation program (SWEEP), is a completely integrated program including routines for airloads, loads spectra, skin temperatures, material properties, flutter stiffness requirements, fatigue life, structural sizing, and for weight estimation of each of the major

DD FORM 1 JAN 73 1473 EDITION OF 1 NOV 65 IS OBSOLETE

SECURITY CLASSIFICATION OF THIS PAGE (When Data Entered)

20. ABSTRACT (CONTINUED)

aircraft structural components. The program produces first-order weight estimates and indicates trends when parameters are varied. Fighters, bombers, and cargo aircraft can be analyzed by the program. The program operates within 100,000 octal units on the Control Data Corporation 6600 computer. Two stand-alone programs operating within 100,000 octal units were also developed to provide optional data sources for SWEEP. These include (1) the flexible airloads program to assess the effects of flexibility on lifting surface airloads, and (2) the flutter optimization program to optimize the stiffness distribution required for lifting surface flutter prevention.

The final report is composed of 11 volumes. This volume (volume VI) contains the methods and program description for the wing and empennage module of SWEEP. Program listings and flow charts are included in the appendix to this volume.

NOTICES

When Government drawings, specifications, or other data are used for any purpose other than in connection with a definitely related Government procurement operation, the United States Government thereby incurs no responsibility nor any obligation whatsoever; and the fact that the Government may have formulated, furnished or in any way supplied the said drawings, specifications, or other data is not to be regarded by implication or otherwise as in any manner licensing the holder or any other person or corporation, or conveying any rights or permission to manufacture, use, or sell any patented invention that may in any way be related thereto.

Publication of this technical report does not constitute Air Force approval of the report's findings or conclusions. It is published only for the exchange and stimulation of ideas.

JAMES H. HALL, Colonel, USAF
Deputy for Development Planning

TABLE OF CONTENTS

Section		Page
	INTRODUCTION TO VOLUME VI	27
	BOOK 1 - TECHNICAL DISCUSSION, SECTIONS I AND II	29
I	MODULE DESCRIPTION	31
	General Description	31
	Analysis Description	40
	Analysis Options	49
	Surface Types	49
	General Data Processing Option	49
	Torque-Box Design Option	52
	Design Data Generation Option for the Flutter Optimization and Flexible Loads Analysis Programs	52
	Design Features	54
	Surface Geometry	54
	Nonlinear Planforms	54
	Cross-Sections	54
	Torque-Box Description	56
	Surface Configuration	57
	Variable-Sweep Wing Designs	57
	T-Tail Empennage Designs	57
	Leading and Trailing Edge Structures	58
	Miscellaneous Structure and Deadweight Mass Items	59
	Secondary Structure	59
	Tip Structure	59
	Internal Fuel	59
	External Concentrated Mass Items	60
	Miscellaneous Internal Contents	60
	Structural Design Data	61
	Deadweight	61
	Torsional Flutter Requirements	61
	Design Loads	62

Section		Page

Torque-box Design Synthesis 63

Construction Concepts 63
Torque-box Analysis Constants 64
Ultimate Allowable Stresses 64

Weight Calibration Factors 65

Torque-box Structure 65
Pivot Structure 65
Center-Section Structure 65
Leading Edge Structure 65
Trailing Edge Structure 66
Tip Structure 66
Secondary Structure 66

Module Structure 67

Module Execution 67
Execution of Metallic Torque-box Design Overlays 67

Module Storage Arrangement 81

Blank Common 81
Module/Overlay Data Requirements 81

Blank Common Initialization 81
Input Data 83
Output Data 83
Mass Storage File Records 83

Module Core Maps 97

Labeled Common Arrays 97
Blank Common Arrays 97

TABLE OF CONTENTS

Section		Page
II	METHODOLOGY	257
	Introduction	257
	Lifting Surface Geometry	263
	Planform Geometry	263
	Cross-Sectional Geometry	268
	Lifting Surface Design Data	274
	Leading and Trailing Edge Structures	274
	Nonstructural Wing Deadweight	280
	Flutter Stiffness Requirements	284
	Design Airloads	291
	Material Properties	293
	Initial Inertia Loads and Couple Arm Estimation	294
	Structural Synthesis	297
	Cover Design Loads	297
	Torque-Box Synthesis	299
	Metallic Torque-Box Analysis	300
	Cover Synthesis	307
	Intermediate Support Structure	315
	Bending and Torsional Stiffness	321
	Advanced Composite Torque-Box Analysis	322
	General Behavior of Composite Laminates	322
	Governing Relationships	324
	Temperature Dependence of Properties	330
	Stability	331
	Stringer Columns	337
	Full-Depth Honeycomb Sandwich	340

Section		Page

General Procedures 343
Multispar Analysis 349
Multirib Analysis 351
Bending and Torsional Stiffness 356

Pivot Structure Synthesis 357

Weight Analysis 358

Torque-Box Weight Analysis 358
Leading and Trailing Edge Weight Analysis 361

Estimation Equation Form 362
Fixed Leading Edge Structure 365
Leading Edge Control Devices 366
Fixed Trailing Edge Structure 368
Trailing Edge Control Devices 369

Basic Module Output 373
Design Data Generation Option 378

General Description 378
Program Description 378
Mass Properties and Design Data Processing Requirements 380
Structural Synthesis/Weight Analysis Reference System 383
Data for Flexible Loads Analysis Program 385
Data for Flutter Optimization Program 387

BOOK 2 - TECHNICAL DISCUSSION, SECTIONS III AND IV 415

III INPUT DATA PROCESSING AND GEOMETRY ANALYSIS 417

General Description 417

Overlay (8,0) Input Data 417
Overlay (8,0) Output Data 422

Overlay Core Maps 424

Variable Data Subarrays DLE, DTE, and DTC 434
TXY Array 454
YC and YTC Arrays, Overlay (8,0) 486
Output Data Arrays TD and TS 492

Section		Page
	Subroutine Descriptions	503
	Program ØLAY8	503
	Subroutine CCNTL	503
	Subroutine CASE	510
	Subroutine GEØMW	513
	Subroutine GEØMC	521
	Subroutine VSGEØM	524
	Subroutine TBWDC	527
	Subroutine ABØXC	534
	Subroutine DMAX	537
	Subroutine CAERØ	540
	Subroutine SWPXYP	542
	Subroutine PRTG	545
	Subroutine GCØMP	550
IV	SUBROUTINE REFERENCE TABLES FOR OVERLAYS (9,0), (10,0), (14,0), (15,0), (16,0), (17,0), and (18,0)	552
	BOOK 3 - TECHNICAL DISCUSSION, SECTION V	767
V	CORE MAPS FOR OVERLAYS (9,0), (10,0), (14,0), (15,0), (16,0), (17,0), and (18,0)	769
	REFERENCES	1097

Section	Page

APPENDIX A - GENERAL INFORMATION FOR MODULE FLOW CHARTS AND LISTINGS 1123

General Description 1123
Autoflow Description 1123

Cross Reference List 1128
Table of Diagnostics 1128
Flow Charts 1129

APPENDIX B - PROGRAM FLOW CHARTS, OVERLAYS (8,0), (14,0), (15,0), (16,0) AND (17,0) 1132

Overlay (8,0) - Input Data Processing and Geometry Analysis 1138

Program Table of Contents and References, and Table of Diagnostics 1139
Program Flow Charts 1153

Program ØLAY8 1154
Subroutine CCNTL 1157
Subroutine CASE 1166
Subroutine GEØMW 1170
Subroutine GEØMC 1180
Subroutine VSGEØM 1187
Subroutine TBWDC 1193
Subroutine ABØXC 1199
Subroutine DMAX 1203
Subroutine CAERØ 1208
Subroutine SWPXYP 1211
Subroutine PRTG 1214
Subroutine GCØMP 1219

Overlay (14,0) - Leading and Trailing Edge Structures, Weight and Mass Properties Analysis 1223

Program Table of Contents and References, and Table of Diagnostics 1225
Program Flow Charts 1239

Program ØLAY14 1240
Subroutine WLETE 1243
Subroutine GCNTL 1253

Section	Page

Subroutine LEWT 1264
Subroutine TEWT 1274
Subroutine TEDEV 1279
Subroutine TEWTI 1286
Subroutine LETEI 1295
Subroutine CTØT1 1309

Overlay (15,0) - Fuel, Contents and Concentrated Masses, Weight and Mass Properties Analysis 1315

Program Table of Contents and References, and Table of Diagnostics 1317
Program Flow Charts 1331

Program ØLAY15 1332
Subroutine WCØNT 1335
Subroutine MISCNT 1338
Subroutine MISCIT 1349
Subroutine CDL 1361
Subroutine FDIS 1370
Subroutine TBFWI1 1382
Subroutine CTØT2 1392
Subroutine PRTM 1397

Overlay (16,0) - Design Data for Torque-Box Analysis 1403

Program Table of Contents and References, and Table of Diagnostics 1405
Program Flow Charts 1419

Program ØLAY16 1420
Subroutine WDDATA 1423
Subroutine MTLCW 1428
Subroutine MTLFW 1432
Subroutine MTLPW 1437
Subroutine ALØAD 1440
Subroutine GJCAL 1448
Subroutine GJSI 1457
Subroutine GJTT 1460
Subroutine CNSTC 1465
Subroutine ABDW 1476
Subroutine YBSET 1481
Subroutine SS2 1488
Subroutine VLØAD1 1491

Section	Page

Overlay (17,0) - Data Generation and Output Data Processing 1495

Program Table of Contents and References, and Table of Diagnostics 1497
Program Flow Charts 1509

Program ØLAY17 1510
Subroutine WØDATA 1513
Subroutine PRTD 1525
Subroutine TBFWI 1537
Subroutine WFLDD 1547
Subroutine WVFDD 1552
Subroutine TPINT 1563
Subroutine CTØT 1568
Subroutine PINTØ 1573

APPENDIX C - PROGRAM FLOW CHARTS, OVERLAYS (9,0) AND (10,0) 1603

Overlay (9,0) - Torque-Box Structural Synthesis/ Weight Analysis for Metallic Designs - No. 1 1607

Program Table of Contents and References, and Table of Diagnostics 1609
Program Flow Charts 1621

Program ØLAY9 1622
Subroutine PRØG 1625
Subroutine DWYBA 1633
Subroutine DEADW 1638
Subroutine VLØAD 1642
Subroutine TBØPT 1646
Subroutine PIVØT 1660
Subroutine TEE 1672
Subroutine TEL 1676
Subroutine CSECW 1680
Subroutine DLPVT 1684
Subroutine PRTA 1693
Subroutine PRTH 1703

Overlay (10,0) - Torque-Box Structural Synthesis/ Weight Analysis for Metallic Designs - No. 2 1709

Program Table of Contents and References, and Table of Diagnostics 1710

Section	Page

Program Flow Charts s 1733

Program ØLAY10 1734
Subroutine CNSTR 1737
Subroutine SECTD 1748
Subroutine SFSCH 1761
Subroutine BØT 1780
Subroutine BØTC 1791
Subroutine TSCH 1795
Subroutine STBAR 1811
Subroutine STRG 1817
Subroutine STRGØ 1833
Subroutine STRIL 1837
Subroutine STRIB 1842
Subroutine SRRIB 1848
Subroutine STWEB 1851
Subroutine SKWEB 1857
Subroutine EIGJC 1860
Subroutine VFCAL 1865
Subroutine WTCAL 1871
Subroutine BHDJT 1878
Subroutine RTRIB 1887
Subroutine WTPIN 1890
Subroutine CG3P 1894
Subroutine SS 1899
Subroutine PRTB 1902
Subroutine PRTC 1907
Subroutine PRTBK 1911

APPENDIX D - PROGRAM FLOW CHARTS, OVERLAY (18,0) 1939

Overlay (18,0) - Torque-Box Structural Synthesis/ Weight Analysis for Advanced Composite Designs 1941

Program Table of Contents and References, and Table of Diagnostics 1943
Program Flow Charts 1969

Program ØLAY18 1970
Subroutine ATBØPT 1973
Subroutine ACLØAD 1982
Subroutine TEMPC 1990
Subroutine AVLOAD 1996
Subroutine ACPRØG 2000
Subroutine CKSTAB 2006

Section

	Page
Subroutine ACWMS	2012
Subroutine ACWFDH	2027
Subroutine CKSFDH	2034
Subroutine WEIGH1	2038
Subroutine ACWRBS	2044
Subroutine ACWSTR	2057
Subroutine ACMRSK	2074
Subroutine ACSTRG	2079
Subroutine WEIGH2	2086
Subroutine ASTIFF	2090
Subroutine ACEIGJ	2096
Subroutine ACNSTR	2100
Subroutine ACPRTA	2111
Function XN	2123
Subroutine WTCAL	2126
Subroutine BHDJT	2128
Subroutine RTRIB	2130
Subroutine WTPIN	2132
Subroutine DWYBA	2134
Subroutine DEADW	2136
Subroutine CSECW	2138
Subroutine PIVØT	2140
Subroutine TEE	2142
Subroutine TEL	2144
Subroutine DLPVT	2146
Subroutine PRTB	2148
Subroutine PRTC	2150
Subroutine PRTH	2152
APPENDIX E - PROGRAM LISTINGS, OVERLAYS (8,0), (14,0), (15,0), (16,0) AND (17,0)	2179
Overlay (8,0) - Input Data Processing and Geometry Analysis	2185
Program ØLAY8	2186
Subroutine CCNTL	2186
Subroutine CASE	2193
Subroutine GEØMW	2195
Subroutine GEØMC	2203
Subroutine VSGEØM	2207
Subroutine TBWDC	2212
Subroutine ABØXC	2216
Subroutine DMAV	2218

Section | Page

Subroutine CAERØ 2220
Subroutine SWPXYP 2220
Subroutine PRTG 2221
Subroutine GCØMP 2224

Overlay (14,0) - Leading and Trailing Edge Structures, Weight and Mass Properties Analysis 2229

Program ØLAY14 2230
Subroutine WLETE 2230
Subroutine GCNTL 2234
Subroutine LEWT 2240
Subroutine TEWT 2246
Subroutine TEDEV 2249
Subroutine TEWTI 2253
Subroutine LETEI 2259
Subroutine CTØT1 2266

Overlay (15,0) - Fuel, Contents and Concentrated Masses, Weight and Mass Properties Analysis 2269

Program ØLAY15 2270
Subroutine WCØNT 2270
Subroutine MISCNT 2271
Subroutine MISCIT 2278
Subroutine CDL 2286
Subroutine FDIS 2291
Subroutine TBFWI1 2299
Subroutine CTØT2 2305
Subroutine PRTM 2307

Overlay (16,0) - Design Data for Torque-Box Analysis 2309

Program ØLAY16 2310
Subroutine WDDATA 2310
Subroutine MTLCW 2313
Subroutine MTLFW 2315
Subroutine MTLPW 2318
Subroutine ALØAD 2319
Subroutine GJCAL 2324
Subroutine GJSI 2330
Subroutine GJTT 2331
Subroutine CNSTC 2333
Subroutine ABDW 2339

Section	Page

Subroutine YBSET 2341
Subroutine SS2 2344
Subroutine VLØAD1 2345

Overlay (17,0) - Data Generation and Output Data Processing 2349

Program ØLAY17 2350
Subroutine WØDATA 2350
Subroutine PRTD 2359
Subroutine TBFWI 2367
Subroutine WFLDD 2373
Subroutine WVFDD 2376
Subroutine TPINT 2385
Subroutine CTØT 2387
Subroutine PINTØ 2389

APPENDIX F - PROGRAM LISTINGS, OVERLAYS (9,0), (10,0) AND (18,0) 2417

Overlay (9,0) - Torque-Box Structural Synthesis/ Weight Analysis for Metallic Designs - No. 1 2423

Program ØLAY9 2424
Subroutine PRØG 2424
Subroutine DWYBA 2429
Subroutine DEADW 2432
Subroutine VLØAD 2434
Subroutine TBØPT 2436
Subroutine PIVØT 2443
Subroutine TEE 2450
Subroutine TEL 2452
Subroutine CSECW 2453
Subroutine DLPVT 2455
Subroutine PRTA 2461
Subroutine PRTH 2466

Overlay (10,0) - Torque-Box Structural Synthesis/ Weight Analysis for Metallic Designs - No. 2 2469

Program ØLAY10 2470
Subroutine CNSTR 2470
Subroutine SECTD 2477
Subroutine SFSCH 2485
Subroutine BØT 2494
Subroutine BØTC 2497

Section		Page

Subroutine TSCH	2498
Subroutine STBAR	2507
Subroutine STRG	2509
Subroutine STRGØ	2514
Subroutine STRIL	2516
Subroutine STRIB	2518
Subroutine SRRIB	2520
Subroutine STWEB	2521
Subroutine SKWEB	2523
Subroutine EIGJC	2524
Subroutine VFCAL	2528
Subroutine WTCAL	2531
Subroutine BHDJT	2537
Subroutine RTRIB	2541
Subroutine WTPIN	2542
Subroutine CG3P	2544
Subroutine SS	2545
Subroutine PRTB	2546
Subroutine PRTC	2548
Subroutine PRTBK	2550
Overlay (18,0) - Torque-Box Structural Synthesis/ Weight Analysis for Advanced Composite Designs	2553
Program ØLAY18	2554
Subroutine ATBØPT	2554
Subroutine ACLØAD	2561
Subroutine TEMPC	2566
Subroutine AVLØAD	2569
Subroutine ACPRØG	2572
Subroutine CKSTAB	2577
Subroutine ACWMS	2580
Subroutine ACWFDH	2590
Subroutine CKSFDH	2594
Subroutine WEIGH1	2595
Subroutine ACWRBS	2598
Subroutine ACWSTR	2606
Subroutine ACMRSK	2615
Subroutine ACSTRG	2619
Subroutine WEIGH2	2622
Subroutine ASTIFF	2624
Subroutine ACEIGJ	2629
Subroutine ACNSTR	2632
Subroutine ACPRTA	2642
Function XN	2650

Section

Page

Subroutine WTCAL	2650
Subroutine BIDUT	2650
Subroutine RTRIB	2651
Subroutine WTPIN	2651
Subroutine DWYBA	2651
Subroutine DEADW	2651
Subroutine CSECW	2651
Subroutine PIVØT	2651
Subroutine TEE	2652
Subroutine TEL	2652
Subroutine DLIVT	2652
Subroutine PRTB	2652
Subroutine PRTC	2652
Subroutine PRTH	2653

LIST OF ILLUSTRATIONS

Figure	Title	Page
1	Wing and Empennage Module, Overlay Execution Flow Diagram.	33
2	Overlay (8,0) - Input Data Processing and Geometry Analysis	68
3	Overlay (14,0) - Leading and Trailing Edge Structures, Weight and Mass Properties Analysis.	69
4	Overlay (15,0) - Fuel, Contents and Concentrated Masses, Weight and Mass Properties Analysis.	70
5	Overlay (16,0) - Design Data for Torque-box Analysis . . .	71
6	Overlay (9,0) - Torque-box Structural Synthesis/Weight Analysis for Metallic Designs - No. 1.	72
7	Overlay (10,0) - Torque-box Structural Synthesis/Weight Analysis for Metallic Designs - No. 2.	73
8	Overlay (18,0) - Torque-box Structural Synthesis/Weight Analysis for Advanced Composite Designs.	74
9	Overlay (17,0) - Data Generation and Output Data Processing	75
10	Weight Summary, Wing Group	84
11	Weight Summary, Horizontal Tail Group.	86
12	Weight Summary, Vertical Tail Group.	88
13	General Program Functional Flow Diagram.	259
14	Logic and Execution Subroutine Flow Diagram for Lifting Surface Structural Weight Estimation Module. . .	260
15	Structural Synthesis/Weight Analysis Reference System and Weight Integration	261
16	Idealized Lifting Surface Planform	264
17	Blended Wing Planform.	267
18	Idealized Box Section.	269
19	Blended Wing Torque-Box Geometry	270
20	Blended Wing Normalized Geometry	271
21	Variable-Sweep Wing Geometry Idealization.	273
22	Mass Properties Integration Grid System.	275
23	Leading Edge Structure Weight Distribution	278
24	Leading Edge Structure Chordwise Weight Distribution . . .	279
25	Trailing Edge Structure Chordwise Weight Distribution. . .	281
26	Wing Fuel Distribution	282
27	Contents Weight Distribution	285
28	Externally Mounted Component Description	286
29	Loads Rotation and Translation	292
30	Typical Material Stress-Strain Curve and Evaluation Data	295
31	Effective Structural Width Idealization.	298

Figure		Page

32	Multirib Stringer Design Options	301
33	Multispar Design Options	302
34	First Search Level, Multirib or Multispar Construction . .	305
35	Second Search Level, Multirib.	305
36	Interpolation Scheme for Stress Level.	309
37	Stringer-Column Geometry	313
38	Composite-Ply Orientations	323
39	Laminate Configuration	324
40	Advanced Composite Structures Checked for Stability. . . .	332
41	Torque-Box Cross Section	344
42	Logic and Computational Flow Diagram for Total Multirib Torque-Box Optimization, Subroutine ACWRBS	352
43	Logic and Computational Flow Diagram for Synthesis of Stringer Stiffened Covers, Subroutine ACWSTR	353
44	Logic and Computational Flow Diagram for Skin/Stringer Load and Skin Stability, Subroutine ACMRSK	354
45	Stringer Types for Multirib Torque-Box Covers.	355
46	Leading and Trailing Edge Control Geometry	363
47	Geometry Description for Trailing Edge Device No. 3, 4, and 5 - Trailing Edge Flaps.	370
48	Lifting Surface Component Weight Summary	374
49	Torque-Box Weight Summary, Page 1.	375
50	Torque-Box Weight Summary, Page 2, Pivot Type.	376
51	Flutter, Flexible Airloads, Weight Optimization Design Loop (Stand-Alone Programs).	379
52	Flexible Loads Analysis Mass Distribution and Integration Reference System	381
53	Flutter Optimization Analysis Mass Distribution and Integration Reference System	382
54	Structural Synthesis/Weight Analysis Reference System and Weight Integration.	384
55	Mass Properties Integration Grid System.	386
56	Overlay (8,0), Input Data Processing and Geometry Analysis	420
57	Overlay (8,0), Logic Flow Diagram.	421
58	Geometry Summary Data - Page 1	546
59	Geometry Summary Data - Page 2	547
60	Geometry Summary Data - Swept Platform Position.	548

LIST OF TABLES

Table	Title	Page
1	Subprogram List, Wing and Empennage Module	34
2	Wing and Empennage Module Overlay Subprogram List	76
3	Overlay Blank Common Requirements	82
4	Mass Storage File 1 Records, Wing and Empennage Module	90
5	FDAT Array, Final Output Data	98
6	XMISC Array	100
7	IP Array, Print Control Data	104
8	D Array, Input Variable Data	109
9	ND Array	191
10	DC Array, Miscellaneous Constants	202
11	Array References, Array D	209
12	D Array Variables Cross-Reference List	231
13	Array References, Array ND	243
14	Array References, Array DC	255
15	Torque-Box Elements, Section Stiffness Calculations	356
16	Sample Wing Torque-Box Program Calibration and Weight Index Coefficients	359
17	Flap-Type Indicator and Correlation Coefficients	372
18	Torque-Box Summary Page Line Item Definitions	377
19	External References, Overlay (8,0) Routines	418
20	WD Array, Wing and Empennage Variable Data, Mass Storage File 1, Record 21	425
21	SPAL Array, Wing and Empennage Flutter Analysis Data, Mass Storage File 1, Record 38	430
22	DLE Array, Variable Data Subarray for Nonlinear Leading Edges	436
23	DTE Array, Variable Data Subarray for Nonlinear Trailing Edges	438
24	DTC Array, Variable Data Subarray for Nonlinear Thickness Ratios	440
25	DAF Array, Airfoil Cross-Section Data	442
26	Polynomial Coefficients of Properties of Normalized Airfoils	448
27	Airfoil Ordinates	449
28	AFD Array	450
29	TAF Array, Airfoil Depth Data	451
30	TXY Array, Geometry Data	455
31	YTB Array, Torque-Box Geometry Data	460
32	YLE Array, Leading Edge Geometry Data	462
33	YTE Array, Trailing Edge Geometry Data	463
34	T Array, Locations 1-200, 489-553	464
35	TVS Array	470

Table	Title	Page
36	TGJ Array, Flutter Analysis Data	482
37	TFRDK Array, Geometry Array for Mass Properties Calculations	485
38	YC Array, Overlay (8,0)	487
39	YTC Array	490
40	TD Array, Printed Output Geometry Data	493
41	TS Array	500
42	Data Source Matrix for Adjustment of Variable Data, Array D	505
43	Variable References, Subroutine CCNTL	509
44	Variable References, Subroutine CASE	512
45	TT Array, GEØMW	516
46	Variable References, Subroutine GEØMW	518
47	Variable References, Subroutine GEØMC	523
48	Variable References, Subroutine VSGEØM	526
49	Variable References, Subroutine TBWDC	530
50	TR Array, TBWDC	531
51	TT Array, TBWDC and ABØXC	532
52	Variable References, Subroutine ABØXC	536
53	Variable References, Subroutine DMAX	539
54	Variable References, Subroutine CAERØ	541
55	Variable References, Subroutine SWPXYP	544
56	Variable References, Subroutine PRTG	549
57	Variable References, Subroutine GCØMP	551
58	Cross-Reference List for Subroutine Variable Reference Tables	553
59	External References, Øverlay (14,0) Routines	556
60	External References, Øverlay (15,0) Routines	557
61	External References, Øverlay (16,0) Routines	558
62	External References, Øverlay (9,0) Routines	560
63	External References, Øverlay (10,0) Routines	562
64	External References, Øverlay (18,0) Routines	565
65	External References, Øverlay (17,0) Routines	569
66	Variable References, Subroutine WLETE	570
67	Variable References, Subroutine GCNTL	571
68	Variable References, Subroutine LEWT	572
69	Variable References, Subroutine TEWT	574
70	Variable References, Subroutine TEWTI	575
71	Variable References, Subroutine TEDIV	576
72	Variable References, Subroutine LETEI	577
73	Variable References, Subroutine WCØNT	579
74	Variable References, Subroutine MISCNT	580
75	Variable References, Subroutine MISCIT	582
76	Variable References, Subroutine CDL	584
77	Variable References, Subroutine FDIS	586
78	Variable References, Subroutine PRTM	588

Table	Title	Page

79	Variable References, Subroutine WDDATA.	589
80	Variable References, Subroutine MTLCW	592
81	Variable References, Subroutine MTLFW	593
82	Variable References, Subroutine MTLPW	594
83	Variable References, Subroutine ALØAD	595
84	Variable References, Subroutine GJCAL	598
85	Variable References, Subroutine GJSI.	601
86	Variable References, Subroutine GJTT.	602
87	Variable References, Subroutine CNSTC	605
88	Variable References, Subroutine ABDW	608
89	Variable References, Subroutine YBSET	611
90	Variable References, Subroutine PRØG	613
91	Variable References, Subroutine DEADW	617
92	Variable References, Subroutine DWYBA	619
93	Variable References, Subroutine VLØAD	621
94	Variable References, Subroutine TBØPT	624
95	Variable References, Subroutine CSECW	626
96	Variable References, Subroutine PIVØT	627
97	Variable References, Subroutine TEE	631
98	Variable References, Subroutine TEL	632
99	Variable References, Subroutine DLPVT	633
100	Variable References, Subroutine PRTA.	635
101	Variable References, Subroutine PRTH.	637
102	Variable References, Subroutine CNSTR	638
103	Variable References, Subroutine SECTD	641
104	Variable References, Subroutine SESCH	644
105	Variable References, Subroutine BØT	646
106	Variable References, Subroutine BØTC.	647
107	Variable References, Subroutine TSCH.	648
108	Variable References, Subroutine STBAR	650
109	Variable References, Subroutine STRG.	651
110	Variable References, Subroutine STRGØ	652
111	Variable References, Subroutine STRIL	653
112	Variable References, Subroutine STRIB	654
113	Variable References, Subroutine SRRIB	655
114	Variable References, Subroutine STWEB	656
115	Variable References, Subroutine SKWEB	657
116	Variable References, Subroutine VFCAL	658
117	Variable References, Subroutine EIGJC	659
118	Variable References, Subroutine WTCAL	660
119	Variable References, Subroutine BHDJT	662
120	Variable References, Subroutine RTRIB	663
121	Variable References, Subroutine WTPIN	664
122	Variable References, Subroutine SS.	665
123	Variable References, Subroutine CG3P.	666
124	Variable References, Subroutine PRTB.	667

Table	Title	Page

125	Variable References, Subroutine PRTBK	668
126	Variable References, Subroutine PRTC	669
127	Variable References, Subroutine ACPRØG	670
128	Variable References, Subroutine ACLØAD	674
129	Variable References, Subroutine TEMPC	676
130	Variable References, Subroutine AVLØAD	678
131	Variable References, Subroutine ATBØPT	681
132	Variable References, Subroutine ACNSTR	685
133	Variable References, Subroutine ACWMS	689
134	Variable References, Subroutine CKSTAB	693
135	Variable References, Subroutine WEIGH1	696
136	Variable References, Subroutine ACWFDH	698
137	Variable References, Subroutine CKSFDH	700
138	Variable References, Subroutine ACWRBS	702
139	Variable References, Subroutine ACWSTR	706
140	Variable References, Subroutine ACMRSK	712
141	Variable References, Subroutine ACSTRG	716
142	Variable References, Subroutine WEIGH2	718
143	Variable References, Subroutine ASTIFF	720
144	Variable References, Subroutine ACEIGJ	723
145	Variable References, Function XN	724
146	Variable References, Subroutine ACPRTA	725
147	Variable References, Subroutine WØDATA	729
148	Variable References, Subroutine PRTD	732
149	Variable References, Subroutine TBFWI	734
150	Variable References, Subroutine WFLDD	735
151	Variable References, Subroutine WVFDD	737
152	Variable References, Subroutine TPINT	740
153	Variable References, Subroutine PINTØ	741
154	Variable References, Subroutine CTØT	742
155	Cross-Reference List for Array Core Maps	770
156	DLE Array, Variable Data Subarray for Fixed Leading Edge Structures	774
157	DTE Array, Variable Data Subarray for Fixed Trailing Edge Structures	776
158	DLED1 Array, Variable Data Subarray for Leading Edge Control Surfaces	778
159	DLEDK Array, Variable Data Subarray, Leading Edge Control Surface Analysis Cønstants	781
160	DTED1 Array, Variable Data Subarray for Trailing Edge Control Surfaces, Spoilers	783

Table	Title	Page
161	DTED2 Array, Variable Data Subarray for Trailing Edge Flap-Type Control Surfaces	786
162	DSPDK Array, Variable Data Subarray, Spoiler Control Surface Analysis	793
163	DFLPK Array, Variable Data Subarray, Trailing Edge Flap Control Surface Analysis	794
164	DAILK Array, Variable Data Subarray, Aileron, Elevator, and Rudder Control Surface Analysis	795
165	DFSP Array, Variable Data Subarray, TE Flap-Type Control Surface Support Structure Distribution Constants	797
166	TG Array	799
167	TGA Array	802
168	YC Array, Overlays (14,0), (15,0), and (17,0)	804
169	TWG Array	807
170	CCW Array	814
171	CCI, CCL, and CCT Arrays, Overlay (14,0)	818
172	TCS Array, Overlay (14,0)	823
173	CKD Array, Subroutine LETEI	826
174	CLEI and CTEI Arrays	827
175	CIØY Array	829
176	TGR Array, Subroutine LEWT	831
177	TST Array, Subroutine LEWT	834
178	TTED Array	836
179	TST Array, Subroutine TEWTI and TEDEV	839
180	TGR Array, Subroutine TEWT and TEWTI	845
181	TGR Array, Subroutine LETEI	849
182	TST Array, Subroutine LETEI	852
183	TE Array	855
184	TST Array, Subroutine WLETE	857
185	CMII Array	859
186	CCDLI Array, Overlays (15,0), (16,0), and (17,0)	862
187	CFL1I and CFL2I Arrays	868
188	CKD Array, Overlay (15,0)	870
189	TVMT Array	873
190	T Array, Locations 201-900	876
191	Subroutine References for T(201)-T(900) Variables	884
192	TVF Array	891
193	CTBW Array	898
194	CTBI Array	901
195	WCG Array	904
196	ACL Array	905
197	ACLT Array	908
198	ACVMT and V Arrays	909
199	TEIGJ Array	911
200	ENQ Array	912

Table	Title	Page
201	ENQC Array	914
202	CNT Array	916
203	STRESS Array	920
204	ENX Array	922
205	EL Array	924
206	IEL Array	927
207	SPB Array	929
208	SPN Array	931
209	TF Array	932
210	W Array, Subroutine WEIGH1	935
211	TX Array	937
212	TXS Array	943
213	STRING Array	946
214	W Array, Subroutine WEIGH2	949
215	TSF Array	951
216	TA Array	955
217	CD Array, Locations 1-400, Stiffness Data Arrays	957
218	TDC Array, Overlay (18,0)	961
219	DDUC and DDLC Arrays	968
220	DDIS Array	970
221	DDFS and DDRS Arrays	972
222	DDSTR Array	974
223	DSPLØ Array, Analysis Constants	977
224	TDC Array, Overlays (9,0) and (10,0)	978
225	TSC Array	990
226	TSEC Array	998
227	TSS Array, Subroutines SFSCH and TSCH	1005
228	TSS Array, Subroutine STRIB	1014
229	TSS Array, Subroutine STWEB	1017
230	TWT Array, Locations 1-330, Weight Analysis Data and Constants	1020
231	TWT Array, Locations 331-400, Section Weight Per Inch Data, Subroutine WTPIN	1047
232	TWT Array, Locations 331-400, Center-Section Weight Data, Subroutine CSECW	1053
233	TWT Array, Locations 1 Through 50 and 331 Through 400, Torque-Box Weight Increment Data for Pivot Designs, Subroutine DLPVT	1057
234	PT Array, Subroutine PIVØT	1065
235	S Array, Subroutine PIVØT	1075
236	TSS Array, Total Weight Summary Data, Subroutines TBØPT and ATBØPT	1083
237	TØ Array, Subroutines TBØPT and ATBØPT	1094

LIST OF TABLES

Table	Title	Page
A-1	Appendix References for Wing and Empennage Module Routines. . .	1124
B-1	Appendix References for Overlay (8,0) Routines.	1133
B-2	Appendix References for Overlay (14,0) Routines	1134
B-3	Appendix References for Overlay (15,0) Routines	1135
B-4	Appendix References for Overlay (16,0) Routines	1136
B-5	Appendix References for Overlay (17,0) Routines	1137
C-1	Appendix References for Overlay (9,0) Routines.	1604
C-2	Appendix References for Overlay (10,0) Routines	1605
D-1	Appendix References for Overlay (18,0) Routines	1940
E-1	Appendix References for Overlay (9,0) Routines.	2180
E-2	Appendix References for Overlay (14,0) Routines	2181
E-3	Appendix References for Overlay (15,0) Routines	2182
E-4	Appendix References for Overlay (16,0) Routines	2183
E-5	Appendix References for Overlay (17,0) Routines	2184
F-1	Appendix References for Overlay (9,0) Routines.	2419
F-2	Appendix References for Overlay (10,0) Routines	2420
F-3	Appendix References for Overlay (18,0) Routines	2421

APPENDIX C

PROGRAM FLOW CHARTS, OVERLAYS
(9,0) AND (10,0)

Preceding page blank

TABLE C-1. APPENDIX REFERENCES FOR OVERLAY (9,0) ROUTINES

Routine	Appendix Reference Pages	
	Program Flow Charts	Program Listings
ØLAY9	1622	2424
CSECW	1680	2453
DEADW	1638	2432
DLPVT	1684	2455
DWYBA	1633	2429
PIVØT	1660	2443
PRØG	1625	2424
PRTA	1693	2461
PRTH	1703	2466
TBØPT	1646	2436
TEE	1672	2450
TEL	1676	2452
VLØAD	1642	2434

TABLE C-2. APPENDIX REFERENCES FOR OVERLAY (10,0) ROUTINES

Routine	Appendix Reference Pages	
	Program Flow Charts	Program Listings
ØLAY100	1734	2470
BHDJT	1878	2537
BØT	1780	2494
BØTC	1791	2497
CG3P	1894	2544
CNSTR	1737	2470
EIGJC	1860	2524
PRTB	1902	2546
PRTBK	1911	2550
PRTC	1907	2548
RTRIB	1887	2541
SECTD	1748	2477
SFSCH	1761	2485
SKWEB	1857	2523
SRRIB	1848	2520
SS	1899	2545
STBAR	1811	2507
STRG	1817	2509
STRGØ	1833	2514
STRIB	1842	2518
STRIL	1837	2516
STWEB	1851	2521
TSCH	1795	2498
VFCAL	1865	2528
WTCAL	1871	2531
WTPIN	1890	2542

OVERLAY (9,0)

TORQUE-BOX STRUCTURAL SYNTHESIS/WEIGHT
ANALYSIS FOR METALLIC DESIGNS - NO. 1

Preceding page blank

PROGRAM TABLE OF CONTENTS AND REFERENCES,
AND TABLE OF DIAGNOSTICS

Preceding page blank

```
CARD ID   PAGE/BOX   NAME                          REFERENCES (SOURCE SEQUENCE NO. AND PAGE/BOX)

FORTRAN MODULE    WING AND EMPENNAGE MODULE -

CHART TITLE - INTRODUCTORY COMMENTS

CHART TITLE - PROCEDURES

(0000021)   2.04  10          (0000019)  2.03    (0000019)  2.03
(0000029)   2.08  20          (0000027)  2.07    (0000027)  2.07

CHART TITLE - NEW PROCEDURAL STATEMENTS

CHART TITLE - INTRODUCTORY COMMENTS

CHART TITLE - SUBROUTINE  PROG

(0000041)   5.01  PROG        (0000021)  2.04-X
(0001008)   5.02  100         (0001005)  5.01
(0001018)   5.04  101
(0001014)   5.05  102         (0001009)  5.03
(0001017)   5.07  103         (0001015)  5.06
(0001027)   5.08  1030        (0001015)  5.06
(0001028)   5.09              (0001038)  6.01
(0001038)   6.01  104
(0001042)   6.03              (0001044)  6.05
(0001044)   6.05  105
(0001047)   6.06  150
(0001048)   6.07              (0001050)  6.08
(0001050)   6.08  151
(0001054)   6.09  200
(0001059)   6.11  2000        (0001056)  6.10
(0001062)   6.12  2001        (0001058)  6.11
(0001064)   7.01  2002        (0001059)  6.11
(0001067)   7.02  2003        (0001056)  6.10    (0001063)  6.13
(0001070)   7.03  201         (0000297)  9.15
(0001074)   7.05  202         (0001071)  7.04    (0000297)  9.15
(0001076)   7.07  203         (0001071)  7.04
(0001077)   7.08  2030
(0001080)   7.09  210         (0000167)  7.02    (0000399) 10.24
(0001090)   7.12  211
(0000403)   7.15  400         (0000163)  6.13    (0000175)  7.06    (0000297)  9.15
(0000404)   7.16              (0000406)  7.17
(0000406)   7.17  401
(0000196)   8.01              (0000202)  8.04
(0000202)   8.04  2110
(0000205)   8.05  220         (0000249)  8.22
(0000207)   8.06  222
(0000208)   8.07  223
(0000210)   8.10  230         (0000207)  8.06    (0000363) 10.13
(0000224)   8.12  240         (0000105)  5.01
(0000228)   8.14  241
(0000232)   8.15  250         (0000227)  8.13
(0000233)   8.16              (0000236)  8.17
(0000236)   8.17  251
(0000240)   8.18  260
(0000244)   8.20  261
(0000247)   8.21  270         (0000244)  8.20
(0000252)   9.01  280         (0000249)  8.22    (0000361) 10.11
(0000256)   9.03              (0000258)  9.04
(0000258)   9.04  281
(0000274)   9.06              (0000287)  9.11
(0000284)   9.10  282
(0000287)   9.11  283         (0000283)  9.09
(0000301)   9.16  300         (0000244)  8.20
(0000307)   9.17  310         (0000301)  9.16
(0000315)   9.22              (0000327)  9.25
(0000327)   9.25  311
(0000334)  10.01  320         (0000301)  9.16
(0000335)  10.02              (0000353) 10.07
(0000353)  10.07  321
(0000359)  10.10  323         (0000301)  9.16    (0000328)  9.25
```

CARD ID	PAGE/BOX	NAME	REFERENCES (SOURCE SEQUENCE NO. AND PAGE/BOX)					
(0000321)	10.12	324						
(0000360)	10.14	410	(0001761)	7.07				
(0000370)	10.16		(0000300)	10.21				
(0000350)	10.21	411						
(0000391)	10.23	420	(0001671)	7.02				

CHART TITLE - NON-EQUAL STATEMENTS

CHART TITLE - INTRODUCTORY COMMENTS

CHART TITLE - SUBROUTINE DAYBA

(0000423)	13.01	DAYBA	(0000205)	8.05-X	(0000362)	10.12-X		
(0000455)	13.01	100						
(0000459)	13.02	101						
(0000467)	13.04	1201	(0000465)	13.03				
(0000468)	13.05	1202						
(0000472)	13.06	1205	(0000465)	13.03				
(0000473)	13.07	1206						
(0000476)	13.08	200	(0000470)	13.05				
(0000486)	13.11		(0000489)	13.14				
(0000488)	13.14	203						
(0000493)	13.15	110	(0000467)	13.04	(0000472)	13.06	(0000502)	15.14
(0000494)	13.16		(0000486)	14.01				
(0000496)	14.01	1100						
(0000499)	14.03		(0000575)	15.11				
(0000502)	14.05	111						
(0000504)	14.07	1110						
(0000506)	14.08	112	(0000601)	14.04	(0000503)	14.06		
(0000512)	14.11	1120						
(0000513)	14.12	1121	(0000511)	14.10				
(0000515)	14.14	1122						
(0000516)	14.15	1123	(0000514)	14.13				
(0000523)	14.18	301	(0000537)	14.25				
(0000526)	14.19	304	(0000557)	14.28				
(0000529)	14.20	302	(0000522)	14.17				
(0000532)	14.22	113						
(0000533)	14.23	114	(0000531)	14.21				
(0000539)	14.26	303	(0000537)	14.25				
(0000540)	14.27	116	(0000511)	14.10				
(0000559)	15.01	305	(0000557)	14.29				
(0000561)	15.03	118						
(0000562)	15.04	1100	(0000560)	15.02				
(0000566)	15.06	1101						
(0000567)	15.07	1102	(0000565)	15.05				
(0000568)	15.08	1103						
(0000569)	15.09	1104	(0000567)	15.07				
(0000575)	15.11	119	(0000527)	14.19	(0000565)	15.05		
(0000578)	15.12	120						
(0000581)	15.13	130						
(0000586)	15.15	210	(0000582)	15.14				
(0000587)	15.16	1220						
(0000588)	15.17	1221						
(0000590)	15.18	1225	(0000588)	15.15				
(0000591)	15.19	1226						
(0000592)	15.20	2102	(0000589)	15.17				
(0000595)	15.22		(0000598)	15.25				
(0000598)	15.25	213						
(0000601)	15.26	199	(0000587)	15.16	(0000590)	15.18		

CHART TITLE - NON-PROCEDURAL STATEMENTS

CHART TITLE - INTRODUCTORY COMMENTS

CHART TITLE - SUBROUTINE DEADH

(0000612)	10.01	DEADH	(0000241)	8.19-X	(0000578)	15.12-X
(0000639)	10.01	100				
(0000640)	10.03	110				
(0000647)	10.04		(0000673)	10.07		
(0000650)	10.05	111				

CARD ID	PAGE/BOX	NAME	REFERENCES (SOURCE SEQUENCE NO AND PAGE/BOX)		
(0000111)	19.02	112			
(0000629)	19.03	113	(0000557) 18.00	(0000663) 19.01	
(0000575)	19.07	119			
(0000709)	19.09		(0000811) 19.10		
(0000911)	19.10	1193			
(0000987)	19.11	1201			
(0000488)	19.13	1202			
(0000942)	19.14	1205	(0000996) 19.11		
(0000933)	19.15	1206			
(0000977)	19.16	122	(0000990) 19.13		
(0000930)	19.17	1220			
(0000701)	19.19	1221	(0000977) 19.16		
(0000702)	19.20	1222	(0000990) 19.10		
(0000716)	19.23		(0000718) 19.25		
(0000718)	19.25	126			
(0000754)	19.28	193	(0000587) 19.12	(0000632) 19.14	

CHART TITLE - NON-PROCEDURAL STATEMENTS

CHART TITLE - INTRODUCTORY COMMENTS

CHART TITLE - SUBROUTINE VLOAD

(0000755)	22.01	VLOAD	(0000218) 8.10 X		
(0000765)	22.02	15			
(0000766)	22.03	8			
(0000790)	22.04	14	(0000704) 22.01		
(0000796)	22.05	16	(0000784) 22.01	(0000705) 22.02	(0000703) 22.03
(0000788)	22.07	1201			
(0000793)	22.08	1202			
(0000803)	22.09	1205	(0000797) 22.06		
(0000804)	22.10	1206			
(0000807)	22.11	1003	(0000801) 22.08		
(0000811)	22.15	1009	(0000793) 22.07	(0000803) 22.09	
(0000812)	22.16		(0000811) 23.03		
(0000833)	22.19	101	(0000829) 22.18		
(0000842)	22.22	102	(0000829) 22.18		
(0000854)	23.01	103			
(0000811)	23.09	109	(0000863) 23.02		
(0000894)	23.11	10			
(0000895)	23.12	11			
(0000890)	23.13	199	(0000883) 23.10	(0000894) 23.11	

CHART TITLE - NON PROCEDURAL STATEMENTS

CHART TITLE - INTRODUCTORY COMMENTS

CHART TITLE - SUBROUTINE TBOPT

(0000901)	26.01	TBOPT	(0000224) 8.12 X		
(0000954)	26.02	2000	(0000946) 26.01		
(0000968)	26.05	300	(0000364) 26.04		
(0000969)	26.06	301			
(0000970)	26.07	302			
(0000972)	26.08	304	(0000969) 26.05		
(0000973)	26.09	305			
(0010211)	27.01	4100	(0000949) 27.03		
(0010973)	27.02	4520	(0000950) 27.04		
(0000949)	27.03	1000	(0000946) 26.01		
(0000950)	27.04	1001			
(0000951)	27.05	1002			
(0010100)	27.06	4020	(0000949) 27.03		
(0010330)	27.07	4200	(0000950) 27.04		
(0011280)	27.08	4540	(0000951) 27.05		
(0011290)	27.09	4542			
(0011310)	27.10	4543	(0011280) 27.08		
(0011330)	27.11	455	(0011310) 27.10		
(0011350)	27.12	456	(0011310) 27.10		
(0011380)	27.13	457	(0011740) 32.10		
(0000970)	28.01	306	(0000364) 26.04		
(0000980)	28.02	307	(0000970) 28.01		

CARD ID	PAGE/BOX	NAME	REFERENCES (SOURCE SEQUENCE NO. AND PAGE/BOX)				
(0009981)	28.03	309					
(0009984)	29.01	308	(0009978) 28.01				
(0009985)	29.02	311					
(0009989)	29.03	310	(0009980) 28.02	(0009982) 28.01	(0009984) 29.01		
(0009990)	29.04	312					
(0009991)	29.05	314					
(0009994)	29.06	316	(0009989) 29.03				
(0009995)	29.07	318					
(0009998)	29.08	400	(0009988) 26.06 (0009322) 29.03	(0009971) 26.07 (0009984) 29.06	(0009972) 26.08	(0009974) 26.09	(0009990) 29.04
(0010001)	29.10	4000					
(0010002)	29.11	4001	(0010000) 29.03				
(0010003)	29.12	401					
(0010018)	29.13	410	(0010002) 29.11	(0010014) 29.17			
(0010007)	29.15	402	(0010003) 29.12				
(0010014)	29.17	404	(0010003) 29.12				
(0010024)	29.18	420	(0010014) 29.17				
(0010050)	30.01	445	(0010049) 30.03	(0010057) 31.01			
(0010033)	30.03	430	(0010003) 29.12				
(0010039)	30.05	431					
(0010040)	30.06		(0010042) 30.07				
(0010042)	30.07	432					
(0010044)	30.08	434					
(0010049)	30.09	440					
(0010052)	30.10	441	(0010[illegible]) 30.09				
(0010054)	30.11	442	(0010052) 30.10				
(0010056)	31.01	443	(0010052) 30.10				
(0010070)	31.02	446	(0010049) 30.09	(0010056) 30.11			
(0010078)	31.04	4460	(0010068) 30.07				
(0010079)	31.05	447					
(0010082)	31.06	450	(0010078) 31.04				
(0010084)	31.08	451					
(0010088)	31.09	452	(0010083) 31.07				
(0011102)	31.12	4522	(0010099) 27.02				
(0011104)	31.13	4523	(0010099) 27.02				
(0011107)	31.14	453	(0011177) 33.01				
(0011254)	31.18	454					
(0011561)	32.01	4570	(0009951) 27.05				
(0011157)	32.02	4572					
(0011160)	32.03	4573	(0011156) 32.01				
(0011161)	32.04	458					
(0011162)	32.05	459					
(0011180)	32.06	463	(0011160) 32.03				
(0011181)	32.07	464					
(0011189)	32.08	460	(0011161) 32.04	(0011180) 32.06	(0011168) 32.09		
(0011168)	32.09	460	(0011131) 27.10				
(0011171)	32.10	461	(0011168) 32.09	(0011177) 33.01			
(0011177)	33.01	462	(0011168) 32.09				
(0011190)	33.02	462	(0011165) 32.05	(0011184) 32.07			
(0011191)	33.03	465	(0012147) 33.26				
(0012212)	33.14		(0012214) 33.15				
(0012214)	33.15	486					
(0012222)	33.19		(0012234) 33.22				
(0012234)	33.22	4860					
(0012244)	33.24	487	(0011189) 32.08	(0011190) 33.02			
(0012451)	33.25	488	(0012544) 34.04	(0012548) 34.08	(0012661) 34.09		
(0012461)	33.26	489	(0012556) 34.06	(0012558) 34.07			
(0012511)	34.01	4890	(0012381) 33.23				
(0012521)	34.02	4895					
(0012531)	34.03	4896	(0012511) 34.01				
(0012551)	34.05	4891					
(0012571)	34.07	4892					
(0012591)	34.08	4893	(0012544) 34.04				
(0012601)	34.09	4894					
(0012661)	34.10	700	(0001021) 27.01				
(0012671)	34.11	7000					
(0012681)	34.12		(0012701) 34.13				
(0012701)	34.13	7001					
(0012801)	34.15	701	(0012661) 34.10				
(0012811)	34.16		(0012821) 34.17				
(0012821)	34.17	7010					
(0012861)	35.01		(0012871) 35.02				

CARD ID	PAGE/BOX	NAME	REFERENCES (SOURCE SEQUENCE NO. AND PAGE/BOX)		
(001287)	35.02 702				
(001294)	35.03 710				
(001298)	35.05		(001302) 35.07		
(001302)	35.07 711				
(001310)	35.10 712		(001306) 35.09		
(001311)	35.11 713				
(001316)	35.13 714		(001306) 35.09	(001310) 35.10	
(001323)	35.15 720				
(001328)	35.17		(001329) 35.18		
(001329)	35.18 721				
(001340)	36.01 750				
(001341)	36.02		(001347) 36.07		
(001343)	36.04 751				
(001345)	36.06 752				
(001347)	36.07 753		(001342) 36.03	(001344) 36.05	
(001354)	36.11 754				
(001356)	36.12		(001357) 36.13		
(001357)	36.13 755				
(001362)	36.15 760		(001359) 36.14		
(001367)	36.18		(001368) 36.19		
(001368)	36.19 761				
(001373)	36.20 770		(001359) 36.14		
(001374)	36.21		(001376) 36.22		
(001376)	36.22 771				
(001383)	36.25 780				
(001385)	37.02 781				
(001386)	37.03 782				
(001390)	37.04 783		(001394) 37.01	(001385) 37.02	
(001391)	37.05		(001393) 3 06		
(001393)	37.06 784				
(001397)	37.07 790		(001021) 27.01	(001010) 27.06	(001030) 27.07
(001398)	37.08 791		(001238) 33.23		
(001404)	37.10 799		(001189) 32.08	(001190) 33.02	(001397) 37.07

CHART TITLE - NON PROCEDURAL STATEMENTS

CHART TITLE - INTRODUCTORY COMMENTS

CHART TITLE - SUBROUTINE PIVOT

(001457)	40.01 PIVOT		(001272) 34.14-X		
(001478)	40.01 9				
(001479)	40.02 10				
(001479)	40.02		(001479) 40.03		
(001483)	40.05 20		(001481) 40.04		
(001484)	40.06 21				
(001486)	40.07 22		(001483) 40.05		
(001487)	40.08 25		(001485) 40.06		
(001514)	40.19		(001513) 40.17		
(001518)	40.21 30		(001520) 40.22		
(001519)	40.22 31				
(001521)	40.23 33		(001518) 40.21		
(001525)	41.01 35		(001518) 40.21		
(001528)	41.04		(001527) 41.02		
(001531)	41.05 37		(001523) 40.23		
(001535)	41.08 38				
(001536)	41.09 39		(001534) 41.07		
(001559)	42.07 50		(001572) 42.13		
(001570)	42.12 55				
(001571)	42.13 57				
(001574)	42.14 60		(001569) 42.11	(001570) 42.12	
(001575)	42.15 61				
(001575)	42.15		(001575) 42.16		
(001580)	42.18 70		(001813) 47.19	(001819) 47.20	
(001581)	42.19 71				
(001583)	42.20 72		(001580) 42.18		
(001584)	42.21 73		(001582) 42.19		
(001593)	42.28		(001592) 42.26		
(001594)	43.01 74		(001588) 42.23		
(001595)	43.03		(001594) 43.01		
(001597)	43.04 80		(001593) 42.28		

CARD ID	PAGE/BOX	NAME	REFERENCES (SOURCE SEQUENCE ID. AND PAGE/BOX)							
(0001600)	43.07		(0001599)	43.05						
(0001604)	43.09	06								
(0001606)	43.10	08	(0001603)	43.08						
(0001608)	43.11	90	(0001605)	43.09						
(0001609)	43.13	100	(0001744)	46.05						
(0001609)	43.13		(0001608)	43.11						
(0001629)	43.20	104	(0001645)	44.05						
(0001634)	43.23	105								
(0001638)	44.01	300	(0001633)	43.22						
(0001643)	44.04		(0001641)	44.02						
(0001647)	44.06	110								
(0001654)	44.13	800								
(0001659)	44.14	810	(0001663)	44.12						
(0001681)	44.21		(0001609)	44.19						
(0001684)	44.24		(0001683)	44.22						
(0001687)	44.26	130								
(0001689)	45.01	132	(0001686)	44.25						
(0001690)	45.02	134	(0001688)	44.26						
(0001691)	45.05	135	(0001692)	45.03						
(0001705)	45.11	140	(0001703)	45.09						
(0001734)	45.25	160	(0001732)	45.24						
(0001735)	46.01	164	(0001732)	45.24						
(0001737)	46.02	170	(0001735)	45.25						
(0001741)	46.05		(0001739)	46.03						
(0001747)	46.06	200	(0001711)	45.15	(0001716)	45.17				
(0001774)	46.18		(0001772)	46.16						
(0001778)	46.21		(0001776)	46.19						
(0001781)	46.23	220								
(0001782)	47.01	222	(0001780)	46.22						
(0001784)	47.02	224	(0001782)	46.23						
(0001788)	47.05	226	(0001786)	47.03						
(0001807)	47.15	240								
(0001814)	47.17	250	(0001806)	47.14						
(0001812)	47.19	246	(0001810)	47.16						
(0001818)	47.20	252	(0001816)	47.18						
(0001821)	48.01	500	(0001818)	47.16	(0001816)	47.18				
(0001833)	48.07	5001								
(0001857)	48.15	505								
(0001860)	48.16	705	(0001837)	43.23	(0001868)	44.13				
(0001861)	48.17		(0001866)	48.21						
(0001863)	48.19	708								
(0001865)	48.21	710	(0001861)	48.18						
(0001866)	48.22	5002	(0001832)	48.06						
(0001868)	48.23	999	(0001481)	40.04						

CHART TITLE - NON-PROCEDURAL STATEMENTS

CHART TITLE - INTRODUCTORY COMMENTS

CHART TITLE - SUBROUTINE TEE(TTT,TTX)

(0001923)	52.01	TEE	(0001607)	45.06-X	(0001708)	45.12-X	(0001791)	47.06-X	(0001803)	47.11-X			
(0001946)	52.02	68	(0001982)	53.03									
(0001961)	52.07	69	(0001971)	52.11									
(0001971)	52.11	70	(0001969)	52.10									
(0001973)	52.12	71	(0001968)	52.10	(0001971)	52.11							
(0001977)	53.01	72	(0001975)	52.13									
(0001978)	53.02	73	(0001975)	52.13									
(0001984)	53.04	75	(0001982)	53.03									
(0001985)	53.05	99											

CHART TITLE - NON-PROCEDURAL STATEMENTS

CHART TITLE - INTRODUCTORY COMMENTS

CHART TITLE - SUBROUTINE TEL(TL,TX)

(0020035)	56.01	TEL	(0001698)	45.07-X	(0001709)	45.14-X	(0001792)	47.07-X	(0001804)	47.13-X			
(0020064)	56.02	78	(0020095)	57.05									
(0020078)	56.08	79	(0020086)	57.02									
(0020087)	56.12	81	(0020082)	56.11									

CARD ID PAGE/BOX NAME REFERENCES (SOURCE SEQUENCE NO. AND PAGE/BOX)

(0020296)	57.01	60	(0020326)	56.11	
(0020316)	57.03	62	(0020363)	56.13	
(0020930)	57.04	83	(0020[illegible])	56.13	
(0020937)	57.06	65	(0020[illegible])	57.05	

CHART TITLE - NON PROCEDURAL STATEMENTS

CHART TITLE - INTRODUCTORY COMMENTS

CHART TITLE - SUBROUTINE CSECN

(0021099)	60.01	CSECN	(0012294)	35.03	X
(0021427)	60.01	400			
(0021431)	60.02		(0021465)	60.03	
(0021465)	60.03	401			
(0021529)	60.05	410	(0021499)	60.04	
(0021661)	60.03	411			
(0021761)	60.12	420			
(0021777)	60.13		(0022066)	60.24	
(0021931)	60.18	421			
(0021961)	60.20	422			
(0022064)	60.24	423			
(0022071)	60.25	430			
(0022111)	60.26	431			
(0022171)	60.28	432			
(0022211)	61.01		(0022221)	61.02	
(0022221)	61.02	433			
(0022254)	61.03	440			
(0022261)	61.04		(0022271)	61.05	
(0022281)	61.05	441			
(0022351)	61.07	442			
(0022441)	61.10	450			
(0022451)	61.11		(0022481)	61.12	
(0022481)	61.12	451			
(0022561)	61.14	460			
(0022571)	61.15		(0022581)	61.16	
(0022581)	61.16	461			
(0022661)	61.17	470	(0021499)	60.04	

CHART TITLE - NON PROCEDURAL STATEMENTS

CHART TITLE - INTRODUCTORY COMMENTS

CHART TITLE - SUBROUTINE DEPVT

(0023271)	64.01	DEPVT	(0013621)	36.15	X
(0023111)	64.02	5001			
(0023151)	64.05		(0023201)	64.10	
(0023181)	64.08	802			
(0023201)	64.10	801	(0023171)	64.07	
(0023211)	64.11	5002	(0023101)	64.01	
(0023361)	64.14		(0023271)	64.15	
(0023271)	64.15	10			
(0023571)	64.23	110	(0023571)	64.22	
(0023601)	64.24	120	(0023641)	65.02	
(0023621)	65.01	130	(0023571)	64.22	
(0023641)	65.02	140	(0023571)	64.22	
(0023661)	65.03	150	(0023641)	65.02	
(0023681)	65.04	100	(0023611)	64.24	
(0023721)	65.05	170	(0023681)	65.04	
(0023731)	65.06	200	(0024831)	68.06	
(0023801)	65.08	210	(0023781)	65.07	
(0023821)	65.10		(0023931)	65.08	
(0023931)	66.01	240	(0023941)	65.11	
(0023951)	66.02	250	(0023941)	65.11	
(0024001)	66.04	260			
(0024021)	66.06		(0024081)	66.09	
(0024081)	66.09	270			
(0024131)	66.11	280			
(0024171)	66.13	290	(0024191)	66.12	
(0024181)	66.14	300	(0024191)	66.12	

CARD ID	PAGE/BOX	NAME	REFERENCES (SOURCE SEQUENCE NO. AND PAGE/BOX)									
(0026201)	66.15	310	(0026301)	67.05								
(0026291)	67.01	320	(0026191)	66.12								
(0026331)	67.03	330										
(0026351)	67.04	340	(0026321)	67.02								
(0026411)	67.06	350	(0026331)	67.05								
(0026531)	67.10	360	(0026251)	66.17								
(0026571)	67.12	380	(0026531)	67.10								
(0026601)	67.14	390										
(0026661)	67.16	400	(0026631)	67.15								
(0026681)	68.01	410	(0026661)	67.16								
(0026731)	68.03	420	(0026711)	68.02								
(0026791)	68.04	430	(0026631)	67.15								
(0026821)	68.05	440	(0023701)	65.07	(0026551)	67.11						
(0026851)	68.07	500										
(0026881)	68.09	510	(0026591)	67.13								
(0026901)	68.03	520	(0026591)	67.13	(0026661)	67.16						
(0026911)	68.10	525	(0026711)	68.02								
(0026921)	68.11	530	(0026811)	68.04								
(0026951)	68.12	540	(0026761)	68.03								
(0025071)	69.02		(0025281)	69.11								
(0025281)	69.11	560										
(0025411)	69.16	570										
(0025511)	69.18	600	(0023691)	65.04	(0025461)	69.17						
(0025531)	69.21		(0025621)	69.19								
(0025621)	69.23		(0025731)	69.25								
(0025631)	69.25	620										
(0025691)	69.29		(0025681)	69.27								
(0025721)	69.32		(0025701)	69.30								
(0025811)	69.37		(0025801)	70.03								
(0025881)	70.03	650										
(0025961)	70.06	660	(0025461)	69.17								
(0025981)	70.08		(0026001)	70.09								
(0026001)	70.09	670										
(0026061)	70.12		(0026091)	70.13								
(0026091)	70.13	680										
(0026341)	70.23	690										

CHART TITLE - NON PROCEDURAL STATEMENTS

CHART TITLE - INTRODUCTORY COMMENTS

CHART TITLE - SUBROUTINE PRTA

(0026451)	73.01	PRTA	(0011291)	27.09 X	(0011021)	31.12-X	(0011571)	32.02-X	(0012521)	34.02-X	(0013381)	37.08 X		
(0026881)	73.02	500	(0028291)	76.15	(0029211)	78.06	(0029501)	79.01						
(0026931)	73.05	501	(0026911)	73.04										
(0026951)	73.06	490	(0026931)	73.05										
(0026991)	73.07	492	(0026931)	73.05										
(0027031)	73.08	505	(0026911)	73.04										
(0027041)	73.09	510												
(0027071)	74.01	515	(0027031)	73.08										
(0027101)	74.02	520	(0026971)	73.06	(0027011)	73.07	(0027061)	73.09						
(0027201)	74.08	522	(0027181)	74.07										
(0027211)	74.09	1901												
(0027221)	74.10	1902												
(0027231)	74.11	1903												
(0027271)	75.01	1906	(0027221)	74.10										
(0027291)	75.03	1910	(0027201)	74.08	(0027211)	74.09	(0027241)	74.12						
(0027341)	75.04	200												
(0027451)	75.06	202	(0027771)	75.22										
(0027461)	75.07		(0027491)	75.10										
(0027491)	75.10	203												
(0027591)	75.13	207	(0027561)	75.12										
(0027611)	75.15	208												
(0027661)	75.17		(0027671)	75.18										
(0027671)	75.18	2081												
(0027741)	75.20	2083	(0027061)	75.17										
(0027751)	75.21		(0027761)	75.22										
(0027761)	75.22	2084												
(0027831)	76.01	209	(0027561)	75.12	(0027601)	75.14	(0027711)	75.19						
(0027941)	76.03		(0027951)	76.04										

CARD ID	PAGE/BOX	NAME	REFERENCES (SOURCE SEQUENCE NO. AND PAGE/BOX)							
(002795)	76.04	2201								
(002802)	76.05	222								
(002809)	76.08	224								
(002810)	76.09		(002812)	76.10						
(002812)	76.10	2240								
(002816)	76.13	226								
(002828)	76.15	240	(002808)	76.07						
(002830)	76.16	530	(002718)	74.07						
(002838)	76.18	242								
(002841)	76.20		(002843)	76.21						
(002843)	76.21	2420								
(002847)	76.22	2421	(002837)	76.17						
(002857)	76.25		(002860)	76.28						
(002860)	76.28	246								
(002867)	76.32	247								
(002870)	76.34		(002872)	76.35						
(002872)	76.35	248								
(002878)	77.02	250	(002866)	76.31						
(002888)	77.04		(002891)	77.07						
(002891)	77.07	253								
(002905)	77.10		(002909)	77.13						
(002903)	77.13	263								
(002914)	78.01	270	(002991)	79.27						
(002915)	78.02	2701								
(002916)	78.03	2702	(002914)	78.01						
(002918)	78.04	271	(002914)	78.01	(002916)	78.03				
(002995)	78.05	299	(002915)	78.02	(002916)	78.03	(002918)	78.04	(002944)	78.15
(002920)	78.06	2720	(002918)	78.04						
(002924)	78.07	532	(002718)	74.07						
(002933)	78.09	278								
(002934)	78.10		(002937)	78.13						
(002937)	78.13	277								
(002940)	78.14	278								
(002949)	79.01	292	(002909)	77.13						
(002951)	79.02	534	(002718)	74.07						
(002956)	79.04		(002958)	79.07						
(002958)	79.07	2922								
(002973)	79.10		(002975)	79.13						
(002975)	79.13	297								
(002984)	79.21		(002986)	79.24						
(002986)	79.24	298								

CHART TITLE - NON-PROCEDURAL STATEMENTS

CHART TITLE - INTRODUCTORY COMMENTS

CHART TITLE - SUBROUTINE PRTH

(003006)	03.01	PRTH	(001312)	37.12-X	(001306)	37.03-X				
(003032)	03.01	300								
(003037)	03.02	390	(003032)	03.01						
(003040)	03.03	500	(003094)	04.22						
(003045)	03.06	501	(003043)	03.05						
(003047)	03.07	490	(003045)	03.06						
(003051)	04.01	492	(003045)	03.06						
(003055)	04.02	503	(003043)	03.05						
(003056)	04.03	510								
(003059)	04.04	515	(003055)	04.02						
(003062)	04.05	520	(003049)	03.07	(003053)	04.01	(003058)	04.03		
(003064)	04.06	522	(003062)	04.05						
(003071)	04.12		(003078)	04.15						
(003078)	04.15	392								
(003083)	04.18		(003085)	04.21						
(003085)	04.21	394								
(003092)	04.22	560	(003032)	03.01						
(003095)	05.01	530	(003062)	04.05						
(003104)	05.05	578								
(003108)	05.07		(003110)	05.10						
(003110)	05.10	563								
(003115)	05.13		(003117)	05.16						
(003117)	05.16	565								

CARD ID	PAGE/BOX	NAME	REFERENCES (SOURCE SEQUENCE NO. AND PAGE/BOX)		
(0031211)	05.19		(0031231)	05.22	
(0031231)	05.22	506			
(0031201)	05.23	599	(0030086)	04.21	

CHART TITLE - NON-PROCEDURAL STATEMENTS

LOCATION		DIAGNOSTIC
CARD ID	PAGE/BOX	
(0000017)	2.02	UNRECOGNIZED SYNTAX
(0000295)	2.06	UNRECOGNIZED SYNTAX
(0001291)	5.10	UNDEFINED - 'WRITHS' EXTERNAL REFERENCE
(0001311)	5.12	UNDEFINED - 'WRITHS' EXTERNAL REFERENCE
(0001331)	5.14	UNDEFINED - 'WRITHS' EXTERNAL REFERENCE
(0001351)	5.1[illegible]	UNDEFINED - 'WRITHS' EXTERNAL REFERENCE
(0001371)	5.1[illegible]	UNDEFINED - 'WRITHS' EXTERNAL REFERENCE
(0001931)	6.04	UNDEFINED - 'WRITHS' EXTERNAL REFERENCE
(0002931)	9.14	UNDEFINED - 'WRITHS' EXTERNAL REFERENCE
(0003091)	9.18	UNDEFINED - 'READHS' EXTERNAL REFERENCE
(0003951)	10.08	UNDEFINED - 'WRITHS' EXTERNAL REFERENCE
(0003081)	10.14	UNDEFINED - 'READHS' EXTERNAL REFERENCE
(0012001)	33.04	UNDEFINED - 'READHS' EXTERNAL REFERENCE
(0012021)	33.06	UNDEFINED - 'READHS' EXTERNAL REFERENCE
(0012041)	33.08	UNDEFINED - 'READ[illegible] EXTERNAL REFERENCE
(0012051)	33.10	UNDEFINED - 'READ[illegible] EXTERNAL REFERENCE
(0012081)	33.12	UNDEFINED - 'READHS' EXTERNAL REFERENCE
(0013511)	36.09	UNDEFINED - 'WRITHS' EXTERNAL REFERENCE
(0013731)	36.24	UNDEFINED - 'WRITHS' EXTERNAL REFERENCE

PROGRAM FLOW CHARTS

CHART TITLE - INTRODUCTORY COMMENTS

```
*****************************************************************

      *****PROGRAM OLAY3*****
   ***PROGRAM FOR SIXTH OVERLAY OF WING/EMPENNAGE MODULE***
      STRUCTURAL SYNTHESIS/WEIGHT ANALYSIS - METALLIC DESIGN NO 1

*****************************************************************
```

CHART TITLE - PROCEDURES

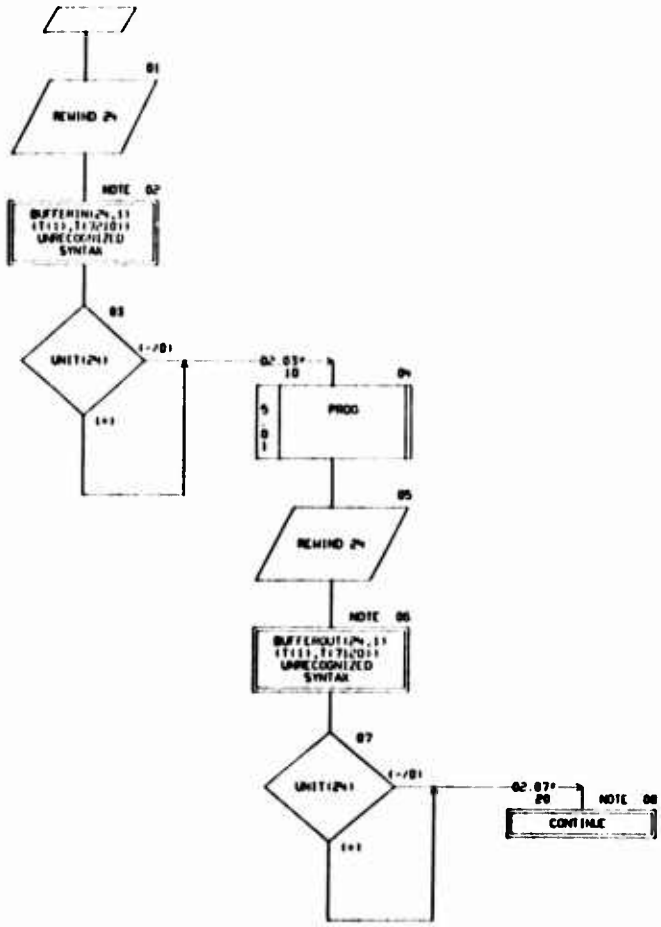

CHART TITLE - NON PROCEDURAL STATEMENTS

```
PROGRAM DLAT3
COMM (17120)
COMMON /MISC/ MISC(100)
```

CHART TITLE - [illegible]

****

*****[illegible]*****

SYNTHESIS [illegible] PROGRAM - [illegible] ITERATION

****

CHART TITLE - SUBROUTINE PROG

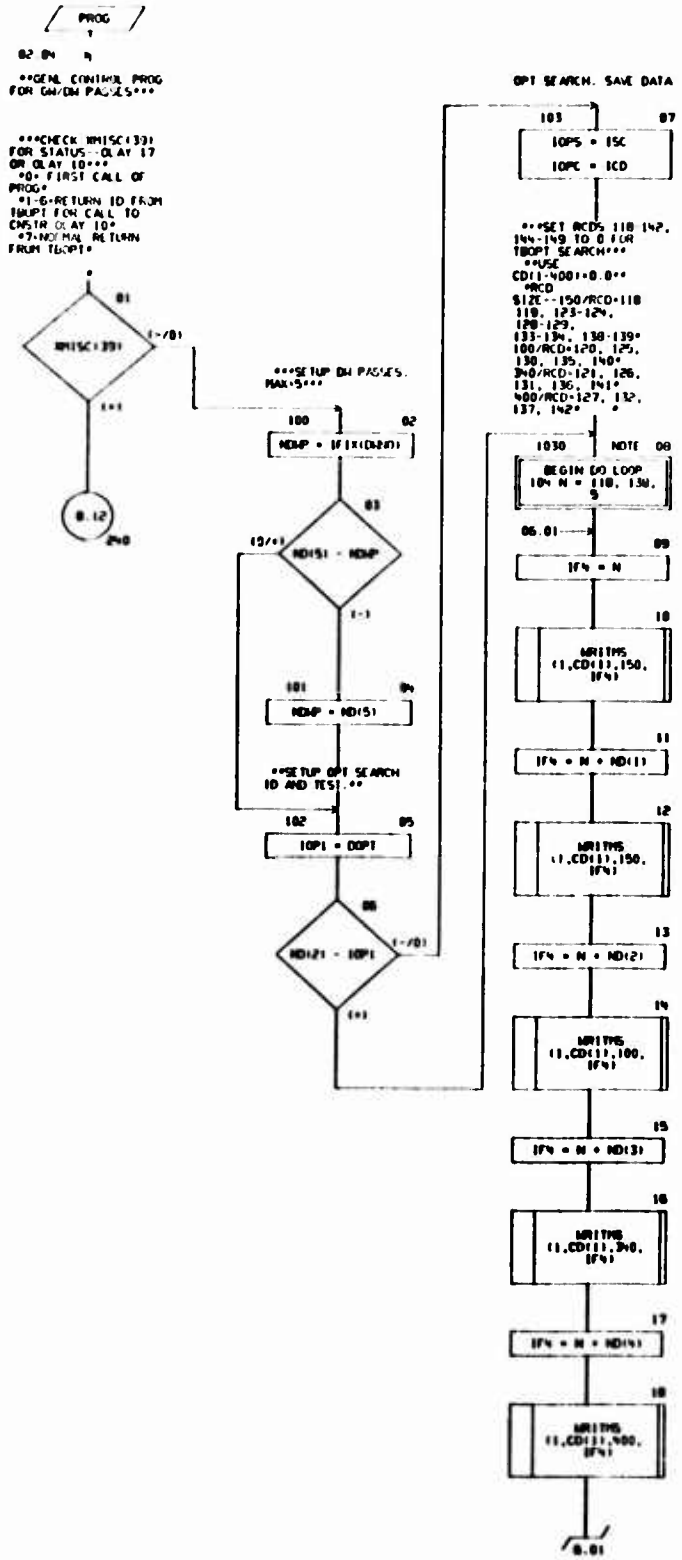

CHART TITLE - SUBROUTINE PROG

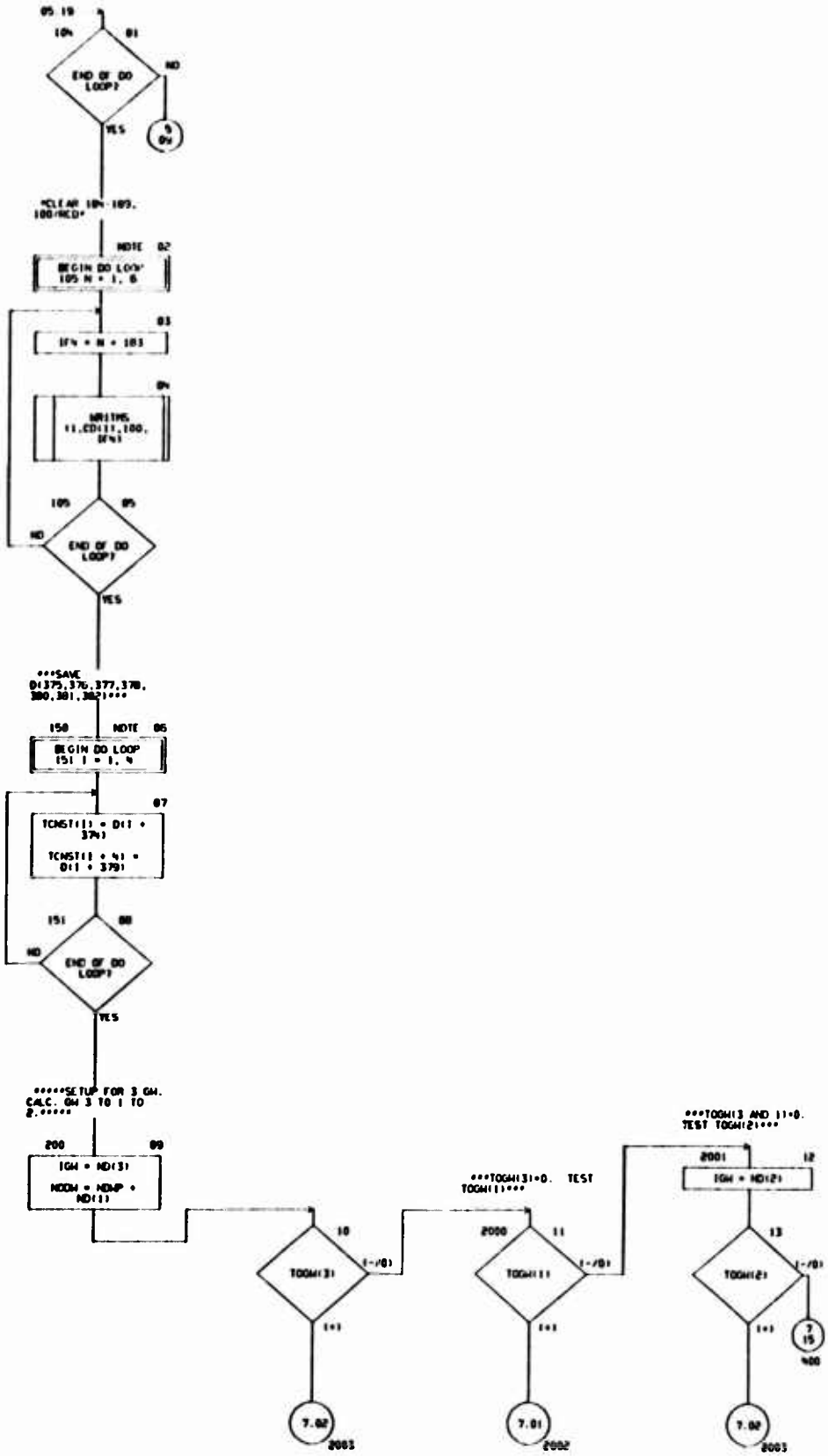

CHART TITLE

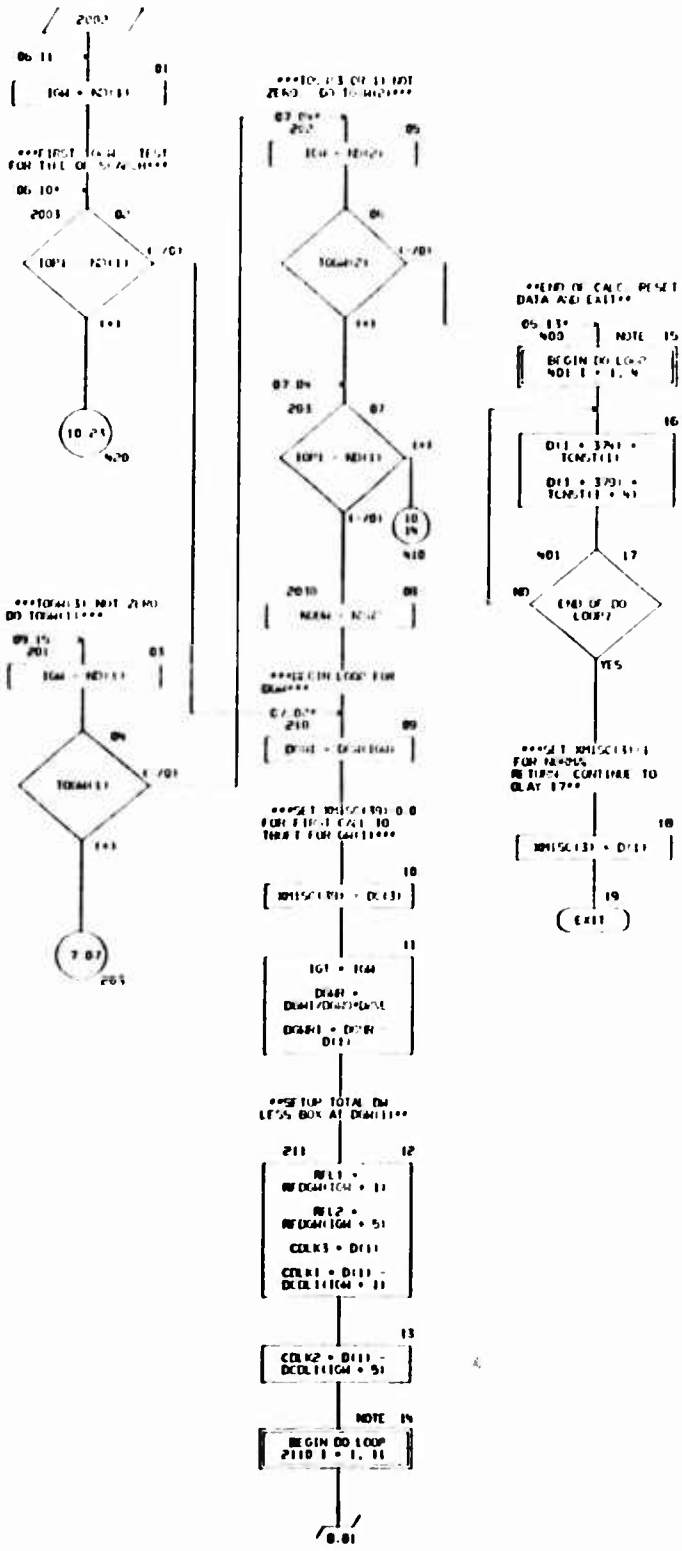

CHART TITLE - SUBROUTINE PROG

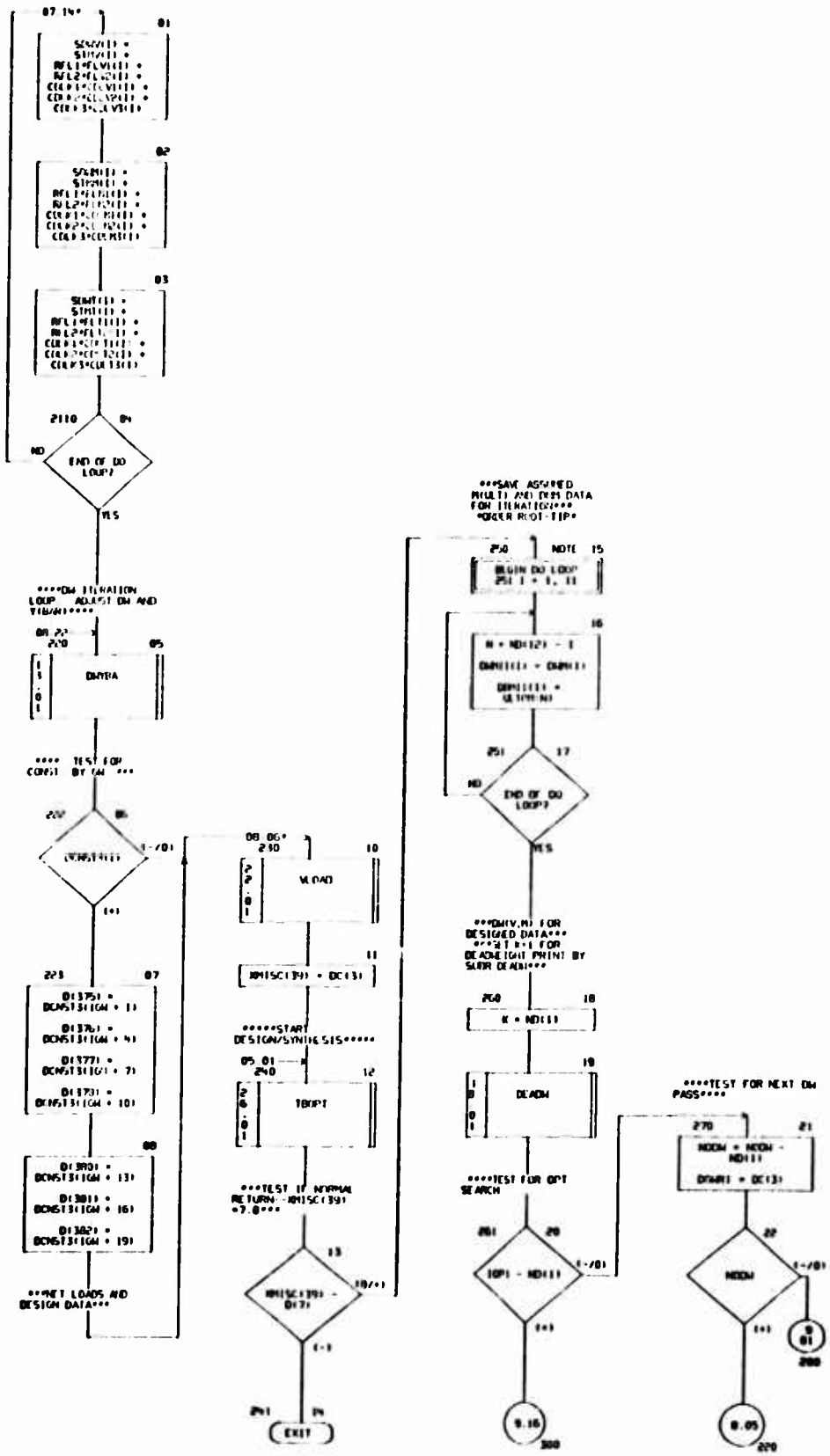

CHART TITLE - SUBROUTINE PROG

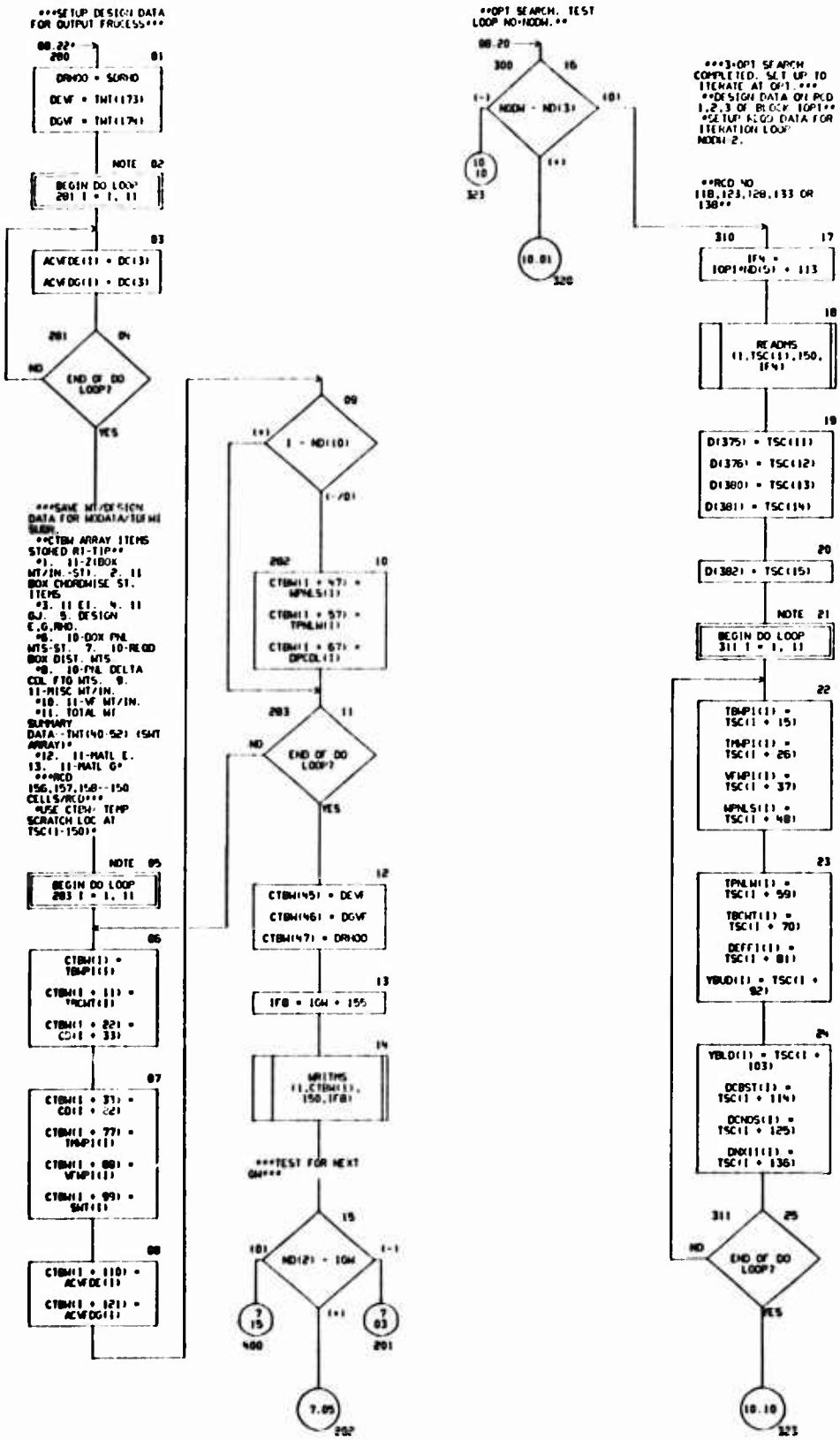

CHART TITLE - SUBROUTINE PROG

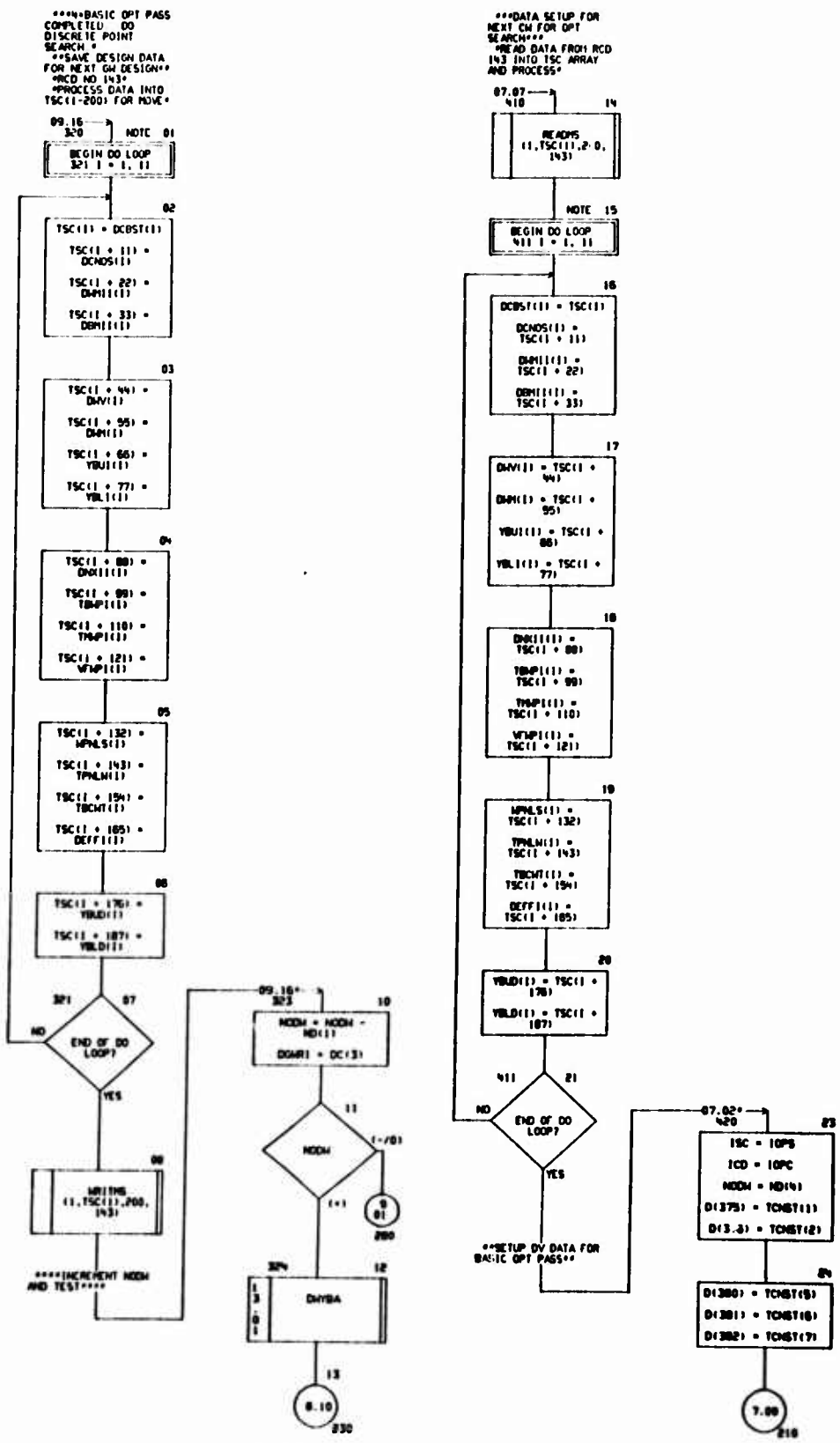

CHART TITLE - NON PROCEDURAL STATEMENTS

```
COMMON I(2000),D(2000),CD(2000),ND(100)
COMMON /MISC/XMISC(10)
DIMENSION DC(100),TSEC(300),DSH(3),TOS(3),TSC(3),THT(400),
TT(2),DMTLB(17),TDGH(15),ULTS(11),DMV(11),DZT(11),DMT(11),
YBU(11),YBS(11),YDL(11),YPLD(11),
DMH(11),DGH(11),DXH(11),DCF(11),
SDMV(11),SDZH(11),SDMT(11),DCR(10),DCRST(22),TCRST(8),
RFDGH(8),FLV1(11),FLV2(11),FLM1(11),FLM2(11),FLT1(11),FLT2(11),
CDLV1(11),CDLV2(11),CDLV3(11),CDLM1(11),CDLM2(11),CDLM3(11),
CDLT1(11),CDLT2(11),CDLT3(11),STMV(11),STMM(11),STMT(11),
DCBST(11),DCRDS(11),DPCDL(10),SHT(11),
NPNLS(11),TPNLN(11),TDCNT(11),TDMP(11),TDZP(11),VMP(11)
,ACVFDC(11),ACVFDS(11)
,CTBH(150),TSC(420)
EQUIVALENCE (DC(1),D(140)),(TSEC(1),CD(150)),(TT(1),I(1317)),
(DGH(1),D(102)),(DGAD,D(105)),(DGAU,I(22)),(DC[illegible],D(0)),
(DXL,D(23)),(DZAD,D(36)),(DCRS(13),D(135)),(DZT(1),CD(110)),
(TDGH(1),I(93)),(DGBRI,TDGH(1)),(DZ[illegible],TDZH(2)),(TDZ[illegible],TDGH(4)),
(RFL1,TDGH(11)),(RFL2,TDGH(12)),
(CDLK1,TDGH(13)),(CDLK2,TDGH(14)),(CDLK3,TDGH(15)),
(IOPS,ND(83)),(IOPC,ND(84)),(IOP1,ND(92)),(IGT,ND(47)),
(ISC,ND(2)),(ICD,ND(49)),(I1,ND(28)),(I2,ND(27)),(I3,ND(29)),
(IFN,ND(93)),(IFB,ND(97)),(IDCT,ND(50)),
(IGH,ND(6)),(IGT,ND(5)),(IDGH,ND(55)),(IZAD,ND[illegible])
EQUIVALENCE (YBUD(1),I(679)),(YBLD(1),I(6[illegible])),
(DOPI,D(16)),(DOPIP,D(13)),(TSS(1),I(15[illegible])),
(DCBST(1),D(76)),(DCRD(1),D(77)),
(DMV(1),I(58)),(DZ[illegible](1),I(60)),(DMT(1),I(62)),
(DMH(1),I(70)),(DGH(1),I(71)),
(DXH(1),I(73)),(DCF(1),I(00)),(ULTS(1),TSEC(1)),
(FLV1(1),I(95)),(FLM1(1),I(96)),(FLT1(1),I(97)),
(FLV2(1),I(78)),(FLM2(1),I(80)),(FLT2(1),I(81)),
(SDMV(1),I(8[illegible])),(SDMM(1),I(6[illegible])),(SDMT(1),I(6[illegible])),
(YBU(1),TSC(13)),(YBL(1),TSEC(10))
EQUIVALENCE (STMV(1),I(8[illegible])),(STMM(1),I(82)),(STMT(1),I(83)),
(CDLV1(1),I(30)),(CDLM1(1),I(32)),(CDLT1(1),I(33)),
(CDLV2(1),I(36)),(CDLM2(1),I(35)),(CDLT2(1),I(36)),
(CDLV3(1),I(37)),(CDLM3(1),I(38)),(CDLT3(1),I(37)),
(SDRD,THT(17)),(RFDGH(1),I(52)),(DMTLB(1),I(26)),
(SDRD,THT(17)),(ERT,DMTLB(14)),(GRT,DMTLB(15)),
(DPCDL(1),I(22)),(SHT(1),I(73)),(CDCRST(1),CD(1[illegible])),
(NPNLS(1),I(1[illegible])),(TPNLN(1),I(65)),(TDCNT(1),I(72)),
(TBMP(1),I(76)),(TMMP(1),I(78)),(VMP(1),I(7[illegible])),
(DCDL(1),D(16))
,(ACVFDC(1),CD(193)),(ACVFDS(1),CD(194))
,(DMOD,CD(193)),(DGVF,CD(193)),(DZVF,CD(195))
,(CTBH(1),I(15)),(TSC(1),I(15))
```

CHART TITLE - INTERSECTION CONTROLS

****

*****SUBROUTINE EXIT*****

DEADWEIGHT AND COMPLE WITH ADJUSTMENT FOR PAGE 11

****

CHART TITLE - SUBROUTINE DWYBA

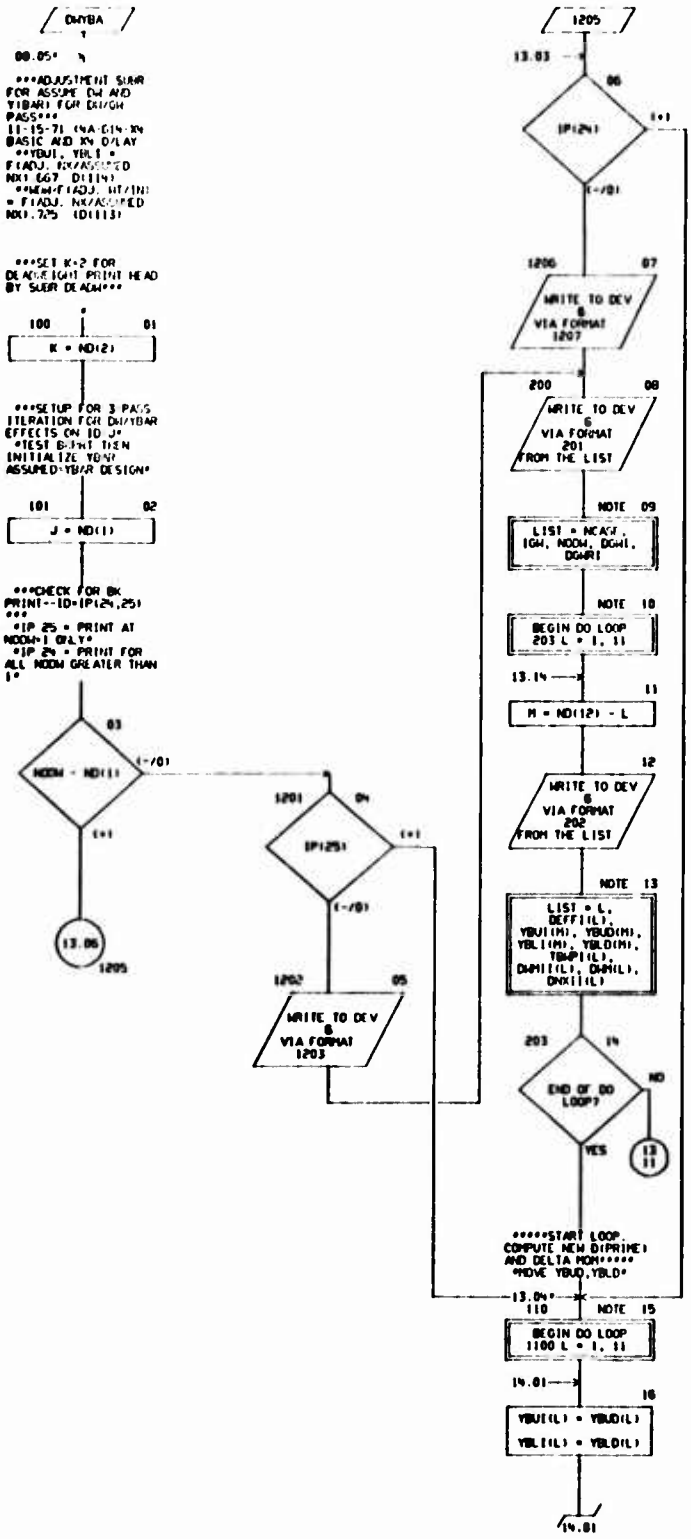

CHART TITLE - SUBROUTINE DMVRA

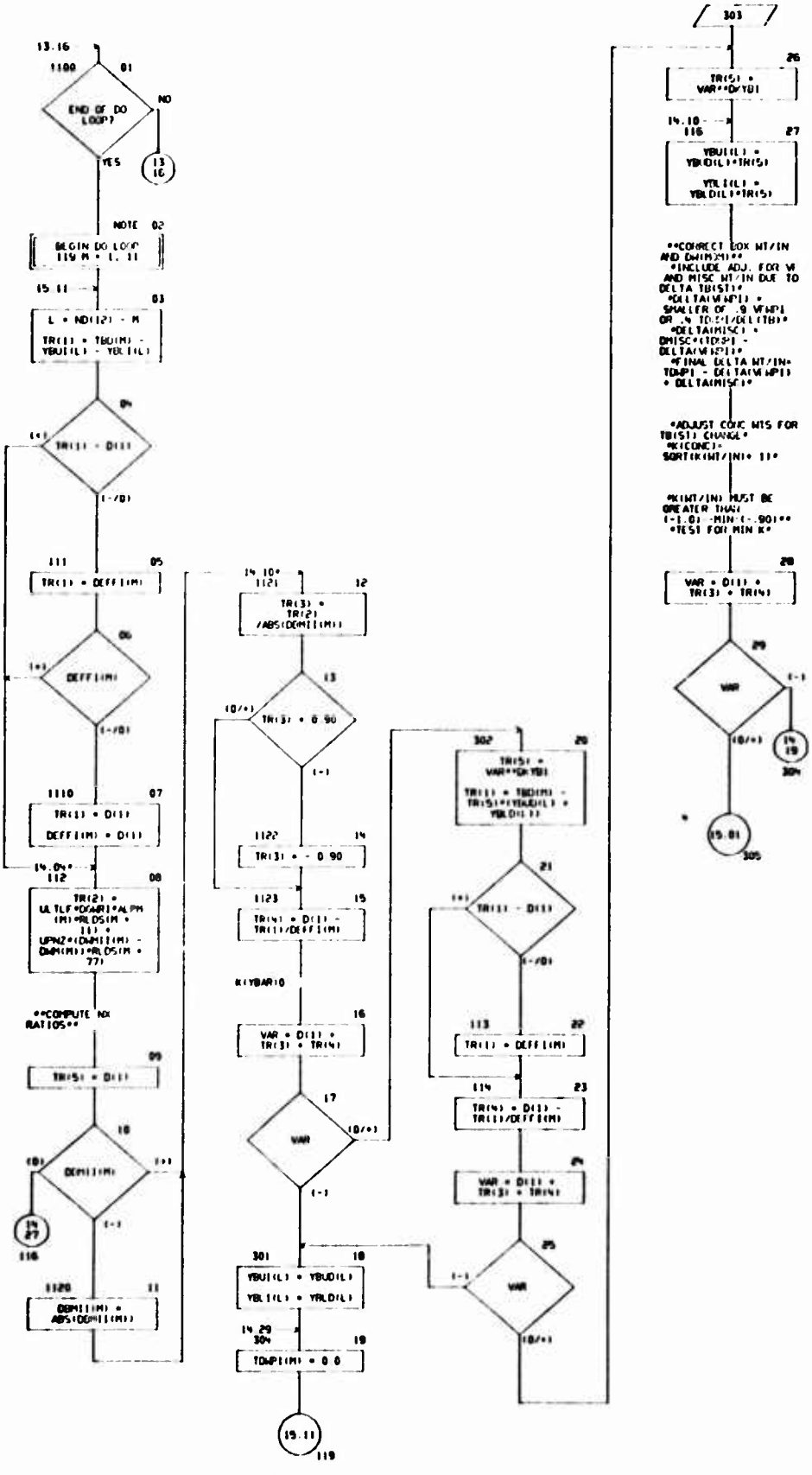

CHART TITLE - SUBROUTINE DAMPA

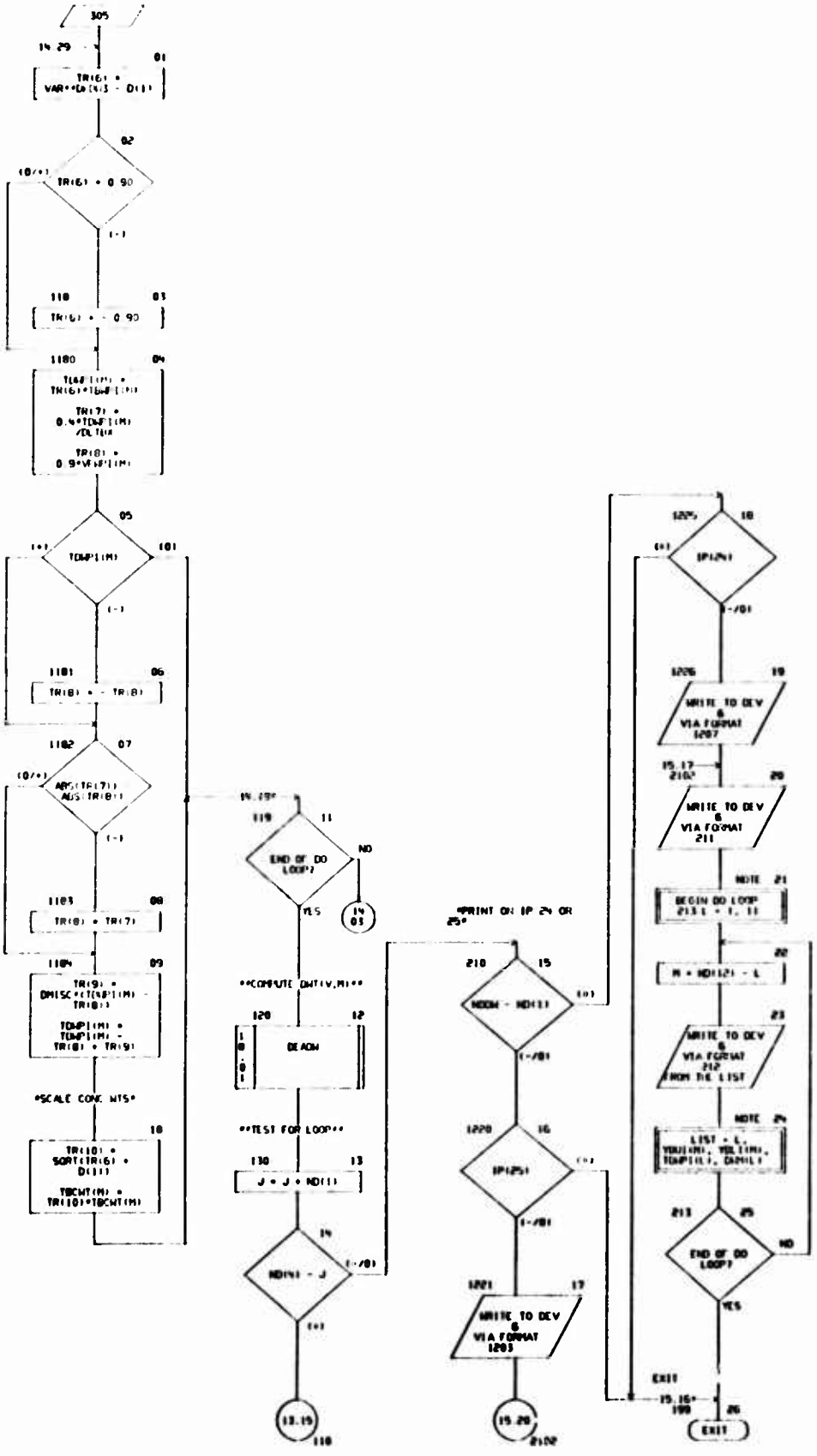

CHART TITLE - [illegible] STATIONS

```
      COMMON T(6220)
      COMMON /IP01/ IP(80)
      DIMENSION DI2[illegible]01,CD(2[illegible]),ZD(1601),DC(1001),TSEC(3001),
      YBUD(11),YBLD(11),YBUI(11),YBLI(11),
      DMN(11),DCM(11),DA[illegible](11),ACM(11),DMN(11),
      DEFF(11),TCAP(11),TCAP(11),TCD(11),
      TBCMT(11),VSAP(11),
      RLDS(132),
      TT(24),IR(17),[illegible]
      EQUIVALENCE (D(1),T(2[illegible]),(CD(1),T(4[illegible])),(DS(1),T(6[illegible])),
      (DC(1),D(1[illegible]),(TSEC(1),CD(1[illegible])),(TT(1),T(13[illegible])),
      (IR(1),T(13[illegible]),(TD[illegible](1),T(1[illegible]),(D[illegible],TD[illegible](1),
      (DYD[illegible],D(1[illegible]),(DYBL,D(1[illegible])),(DYLF,D(12[illegible]),(DYRZ,D(12[illegible]),
      (ALPH(1),T(5[illegible]),(D[illegible](1),T(70[illegible]),(C[illegible](1),T(71[illegible])),
      (DX(1),T(72[illegible]),(DEFF(1),T(C[illegible])),(TDAP(1),T(76[illegible]),
      (TDAP(1),T(76[illegible]),(TD[illegible](1),T(5[illegible]),(D[illegible](1),T(60[illegible])),
      (YBUD(1),T(67[illegible]),(YBL[illegible](1),T(6[illegible]),(D[illegible],T(22[illegible])),
      (YBU(1),TSEC(1[illegible]),(YBL[illegible](1),TSEC(16[illegible]),(DYZE,ND(8[illegible]),(IG4,ND(6[illegible]))
      ,(J,ND(26[illegible]),(L,ND(27[illegible])),(K,ND(28[illegible]),(DX[illegible],D[illegible]),(DCAZ,ND(10[illegible]))
      ,(DMISC,T(19[illegible]),(TBCMT(1),T(78[illegible])),(VSAP(1),T(79[illegible]),(DLTDX,T(18[illegible]))
      ,(K,ND(29[illegible]))
      ,(RLDS(1),CD(40[illegible]))
1203  FORMAT(1H1,E9[illegible]2  * DATA - IP(25) **)
1207  FORMAT(1H1,63X,20(1H* DATA - IP(24) **)
201   FORMAT (1[illegible]  CASE N,14X,9H( **DEADBEAT (GUST ADJ Y DAR ADJUSTMENT
       DATA-** 7(1H0,17X,                                  6H  TG4 T1,7H  NODM-
      11,6H  DG4-F9 1,8H  DG4P1-F0 5,7(6H0 STA  DEFF(A)  YBU(A)  YBU(D)
       YBL(A)  YBL(D)  TB M/IN    TB M(A)    TB M(D)   N(D) )
202   FORMAT (1H 2X,I2,F9.4,NF8.4,F9.4,2F11.1,F9.1)
211   FORMAT (4X,5H  STA  YBU(D)  YBL(D)  DL-M/IN     TB M(D))
212   FORMAT (1H 2X,I2,2F8.4,F9.4,F11.1)
```

CHART TITLE - INTRODUCTORY COMMENTS

```
*****************************************************************

      *****SUBROUTINE DEACH*****
   ***TORQUE-BOX INERTIA LOAD EVALUATION***

*****************************************************************
```

CHART TITLE - SUBROUTINE DEADW

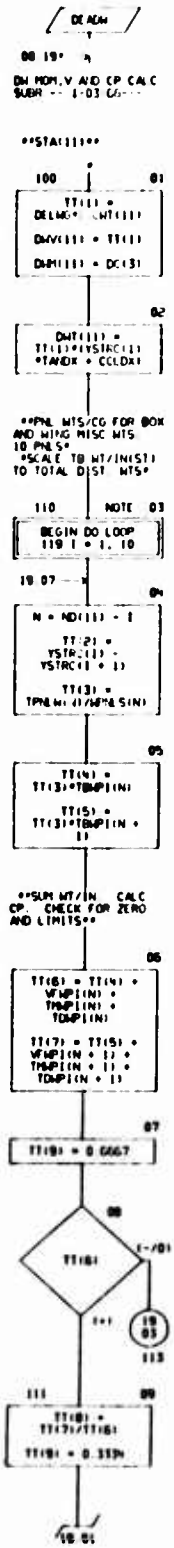

CHART TITLE - SUBROUTINE DCADW

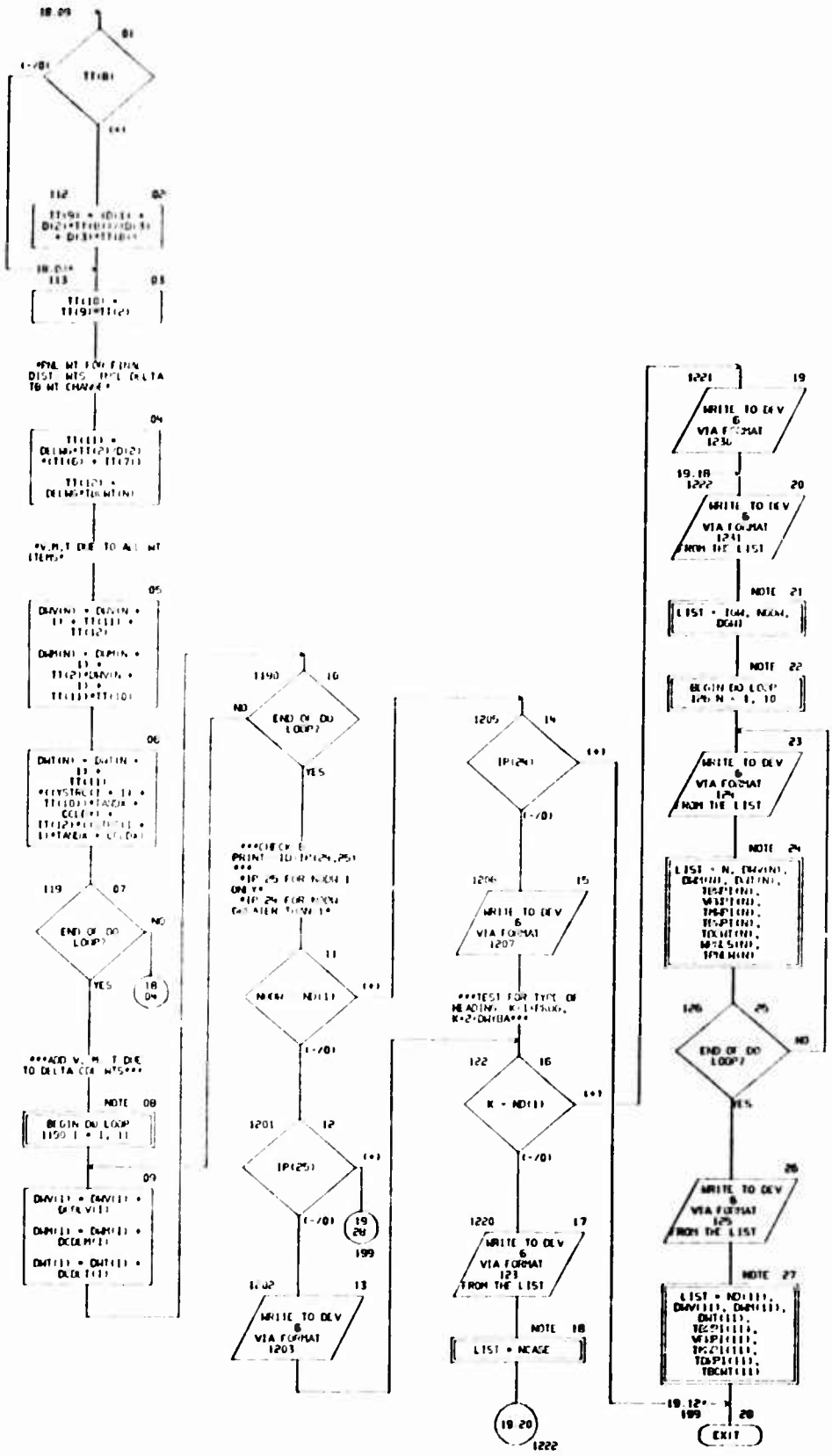

CHART TITLE - NON-PROCEDURAL STATEMENTS

```
      COMMON T(2000),D(2000),CD(2000),ND(100)
      COMMON /IFAINT/ IP(100)
      DIMENSION DC(100),TT(24),TSEC(300),
      DWV(1),DGN(1),DWT(1),
      DCOLV(1),DTCLM(1),DCOLT(1),
      MPNLS(1),TFIZ.M(1),TDCIM(1),
      TBMP(1),VFMP(1),TBSP(1),
      VSTRC(1),TBAP(1)
      EQUIVALENCE (D(1),D(190)),(TSEC(1),CD(150)),(TT(1),T(1317)),
      (VSTRC(1),TSEC(1C6)),(TAIDX,T(1870)),(CCLDX,T(C 1)),
      (DWV(1),T(1593)),(DGN(1),T(DC 1)),(DWT(1),T(2C1)),
      (DELNG,T(1871)),
      (DCOLV(1),T(2[1)),(DCOLM(1),T(2[1)),(DCOLT(1),T(2[1)),
      (MPNLS(1),T(1[6)),(TFIZ.M(1),T(C[1)),(TDCIM(1),T(7[1)),
      (TBMP(1),T(7[1)),(VFMP(1),T(7[6)),(TBSP(1),T(7[1)),
      (TBAP(1),T(7[7)),
      (DGN1,T(2[1)),(IPAGE,ND(1[1)),(NCASE,ND(6[1)),
      (NDOM,ND(5[1)),(IC[4,ID(1[1)),(IN,ID(3[1)),(I1,ID(3[1)),(I2,I[ 1)))
1203  FORMAT(1H1,E7.2,20H** DEAD - IP(25) **)
1207  FORMAT(1H1,E3.2,20H** DEAD - IP(2[) **)
123   FORMAT (1C 3     CASE I4,1  ,G2H-** DEAD EIGHT SUMMARY DATA  TORQUE
      -BOX SYNTHESIS RESULTS ** 7)
1230  FORMAT (5X,H0                -**DEAD EIGHT ADJUSTMENT RESULTS **-7)
1231  FORMAT (1H ,13X,      7H   IGN-11,8H   NDOM-11,7H   DGN-F9 1,7HDGN
      0  STA     IB(V)       IB(M)      IB(T)      IB&P1     VFMP1     TBMP1
         TDMP1     TBCNT    W DIST   TW DIST )
124   FORMAT (1H 3X,I2,F10 1,F12 1,F11.1,F10 4,3F9 4,3F10.2)
125   FORMAT (1H 3X,I2,F10 1,F12 1,F11.1,F10 4,3F9 4,F10.2)
```

CHART TITLE - INTERMEDIATE COMMENTS

```
*****************************************************************

      *****SUBROUTIN. XLOAD*****
   ***NET ULTIMATE DESIGN LOADS EVALUATION***

*****************************************************************
```

CHART TITLE - SUBROUTINE VLOAD

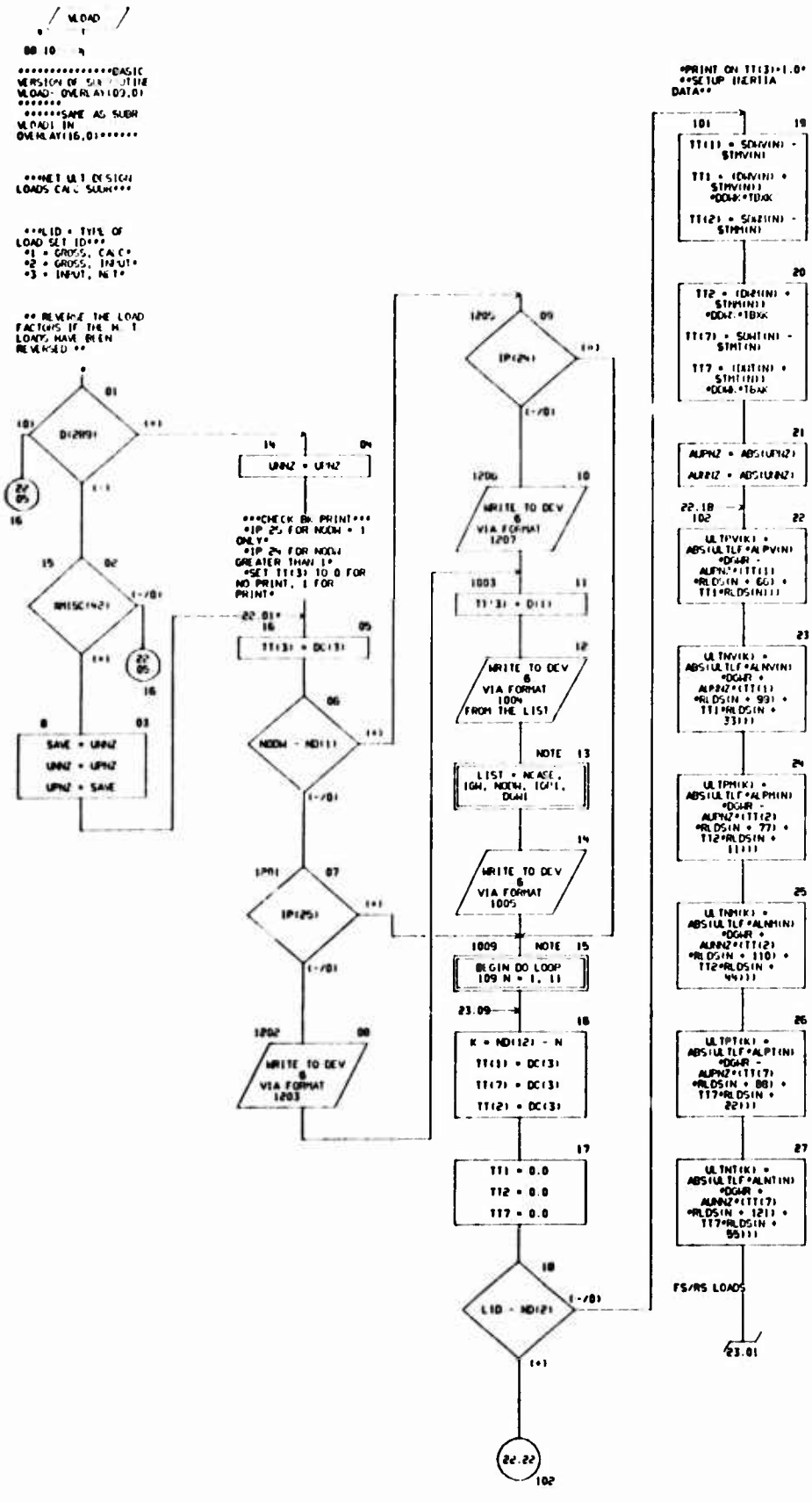

CHART TITLE - SUBROUTINE VLOAD

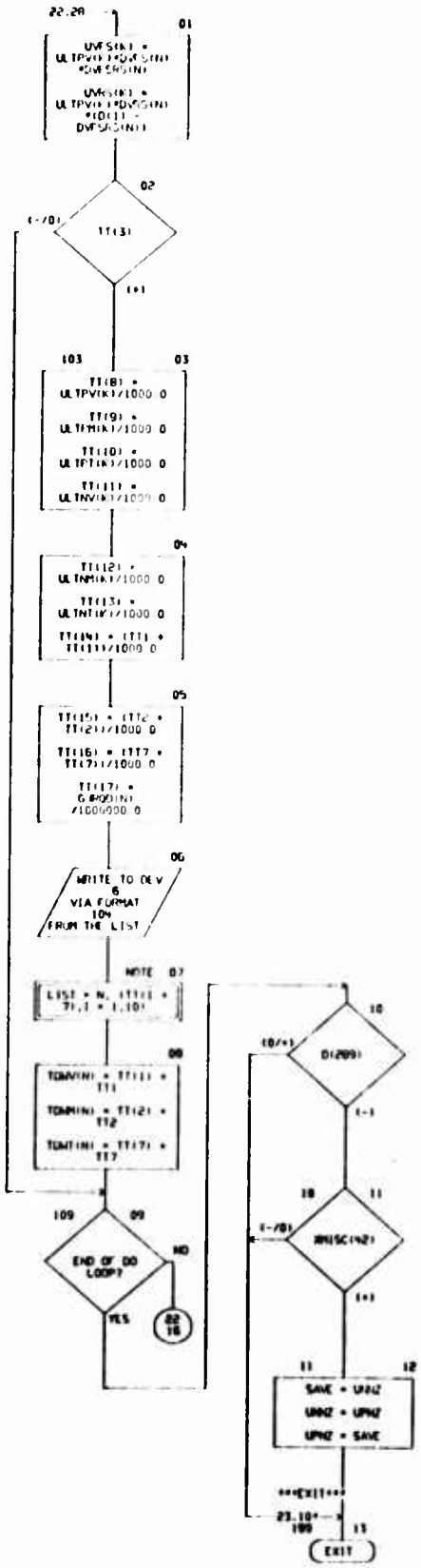

CHART TITLE - NON PROCEDURAL STATEMENTS

```
      COMMON T(2000),D(2500),CD(2000),ND(100)
      COMMON /IPRINT/ IP(10)
      COMMON /MISC/ XMISC(10)
      DIMENSION DC(100),TT(2),T(300),
      ALPV(1),ALPH(1),ALPT(1),ALNV(1),ALNH(1),ALNT(1),
      TDGH(16),ULTP(1),ULTN(1),
      DMV(1),DMH(1),DMT(1),SDMV(1),SDMH(1),SDMT(1),
      UVFS(1),UVRS(1),DVFS(1),DVRS(1),
      TDMV(1),TDMH(1),TDMT(1),
      GJROD(1),DVFSRS(1),
      RLDS(13),
      ULTPV(1),ULTPH(1),ULTNV(1),ULTNH(1)
      EQUIVALENCE (DC(1),D(1400)),(UFNZ,D(2025)),(UANZ,D(2085)),
      (ULTLF,D(1221)),(TT(1),T(1317)),(TSEC(1),CD(1501)),
      (ALPV(1),T(1574)),(ALPH(1),T(1665)),(ALPT(1),T(1877)),(ALNV(1),T(1976)
      ),(ALNH(1),T(2079)),(ALNT(1),T(1853)),(TDGH(1),T(1933)),
      (DMV(1),T(1563)),(DMH(1),T(1603)),(DMT(1),T(1620)),
      (ULTPH(1),TSEC(1)),(ULTPV(1),TSEC(12)),(ULTNV(1),TSEC(11)),(ULTNH
      (1),TSEC(122)),(GJROD(1),T(1609)),(DGMI,T(122)),
      (DGMR,TDGH(2)),(DGMY,TDGH(3)),(TDX,TDGH(4)),
      (NCASE,ND(69)),(NXDM,ND(56)),(TCH,ND(61)),(TOPI,ND(82)),
      (NPAGE,ND(85)),(LTD,ND(90)),(N,ND(30)),(K,ND(3))
      EQUIVALENCE (UVFS(1),TSEC(23)),(UVRS(1),TSEC(34)),
      (ULTPT(1),TSEC(144)),(ULTNT(1),TSEC(155)),
      (SDMV(1),T(1844)),(SDMH(1),T(1955)),(SDMT(1),T(1866)),
      (RLDS(1),CD(1400)),
      (TDMV(1),CD(1968)),(TDMH(1),CD(1979)),(TDMT(1),CD(1990)),
      (DVFSRS(1),CD(1979)),(DVFS(1),DIG(2)),(DVRS(1),DIG(3))
      DIMENSION STMV(1),STMH(1),STMT(1)
      EQUIVALENCE (STMV(1),T(1811)),(STMH(1),T(1822)),(STMT(1),T(1833))
1203  FORMAT(1H1,89X,20H** VLOAD - IP(25) **)
1207  FORMAT(1H1,89X,20H** VLOAD - IP(24) **)
1004  FORMAT (10H      CASE(N,16X,47H-**-DESIGN LOADS/1000 AND REQD GJ/1
      ,000,000-**-/1H0,17X,6H  IGH-,I1,7H  NOOH-,I1,
            7H  IOPI-I1,6H  DGM(F9.1)
1005  FORMAT (10H0  STA   +V(ULT)    +H(ULT)   +T(ULT)  -V(ULT)   -H(UL
      T)   -T(ULT)  VDM(IG)   HDM(IG)   TDM(IG)   GJ(REQ)   )
104   FORMAT (1H 3X,I2,F10.3,F11.2,F10.2,F9.3,F10.2,F10.2,F9.3,F10.2,F10
      .2,F12.3)
```

CHART TITLE - INTRODUCTORY COMMENTS

```
*****************************************************************

      *****SUBROUTINE TBOPT*****
   ***TOTAL TORQUE-BOX WEIGHT OPTIMIZATION CONTROL***

*****************************************************************
```

CHART TITLE - NON-PROCEDURAL STATEMENTS

```
      COMMON T(2000),D(2000),CD(2000),ND(100)
      COMMON /IFRINT/ IP(10)
      COMMON /MISC/ XMISC(100)
      DIMENSION DC(100),T(1024),[illegible] C(300),
      ALPV(11),ALPM(11),ALPT(11),ALNV(11),ALNM(11),ALNT(11),
      TDGH(16),ULTPT(11),ULTNT(11),
      DMV(11),DMM(11),DMT(11),SDMV(11),SDMM(11),SDMT(11),
      UVFS(11),UVRS(11),DVFS(11),DVRS(11),
      TDMV(11),TDMM(11),TDMT(11),
      GJROD(11),DVFSRS(11),
      RLDS(132),
      ULTPV(11),ULTPM(11),ULTNV(11),ULTNM(11)
      EQUIVALENCE (DC(1),D(140)),(UPNZ,D(205)),(UNNZ,D(205)),
      (ULTLF,D(122)),(TT(1),T(1317)),(TSEC(1),CD(150)),
      (ALPV(1),T(574)),(ALPM(1),T(565)),(ALPT(1),T(877)),(ALNV(1),T(576)
      ),(ALNM(1),T(537)),(ALNT(1),T(8[illegible])),(TDGH(1),T(430)),
      (DMV(1),T(5[illegible])),(DMM(1),T(609)),(DMT(1),T(620)),
      (ULTPM(1),TSEC(1)),(ULTPV(1),TSEC(12)),(ULTNV(1),TSEC(111)),(ULTNM
      (1),TSEC(122)),(GJROD(1),T(669)),(DGH,T(22)),
      (DGAR,TDGH(2)),(DGAR,TDGH(3)),(TDGK,TDGH(4)),
      (INCASE,ND(6)),(NXCM,ND(5)),(ICH,ND(6)),(IOPT,ND(8)),
      (NPAGE,ND(10)),(ILTD,ND(9)),(IN,ND(30)),(IK,ND(31))
      EQUIVALENCE (UVFS(1),TSEC(23)),(UVRS(1),TSEC(34)),
      (ULTPT(1),TSEC(194)),(ULTNT(1),TSEC(195)),
      (SDMV(1),T(844)),(SDMM(1),T(855)),(SDMT(1),T(866)),
      (RLDS(1),CD(140)),
      (TDMV(1),CD(1940)),(TDMM(1),CD(1970)),(TDMT(1),CD(1[illegible])),
      (DVFSRS(1),CD(19[illegible])),(DVFS(1),D(6[illegible])),(DVRS(1),D(6[illegible]))
      DIMENSION STMV(11),STMM(11),STMT(11)
      EQUIVALENCE (STMV(1),T(101)),(STMM(1),T(822)),(STMT(1),T(833))
1203  FORMAT(1H1,83X,20H** VLOAD - IP(25) **)
1207  FORMAT(1H1,83X,20H** VLOAD - IP(24) **)
1004  FORMAT (10H      CASE I4,16X,47H** DESIGN LOADS/1000 AND REQD GJ/1
      ,000,000 **/110,17X,6H  IGH=,I1,7H  NOOH=,I1,
            7H  IOPT=I1,6H  DGH=F9.1)
1005  FORMAT (10H0  STA   +V(ULT)    +M(ULT)   +T(ULT)  -V(ULT)   -M(UL
      T)   -T(ULT)  VDM(IG)   MDM(IG)   TDM(IG)   GJ(REQ)  )
104   FORMAT (1H 3X,I2,F10.3,F11.2,F10.2,F9.3,F10.2,F10.2,F9.3,F10.2,F10
      .2,F12.3)
```

CHART TITLE - INTRODUCTORY COMMENTS

```
*****************************************************************

      *****SUBROUTINE TBOPT*****
   ***TOTAL TORQUE-BOX WEIGHT OPTIMIZATION CONTROL***

*****************************************************************
```

CHART TITLE - SUBROUTINE TBOPT

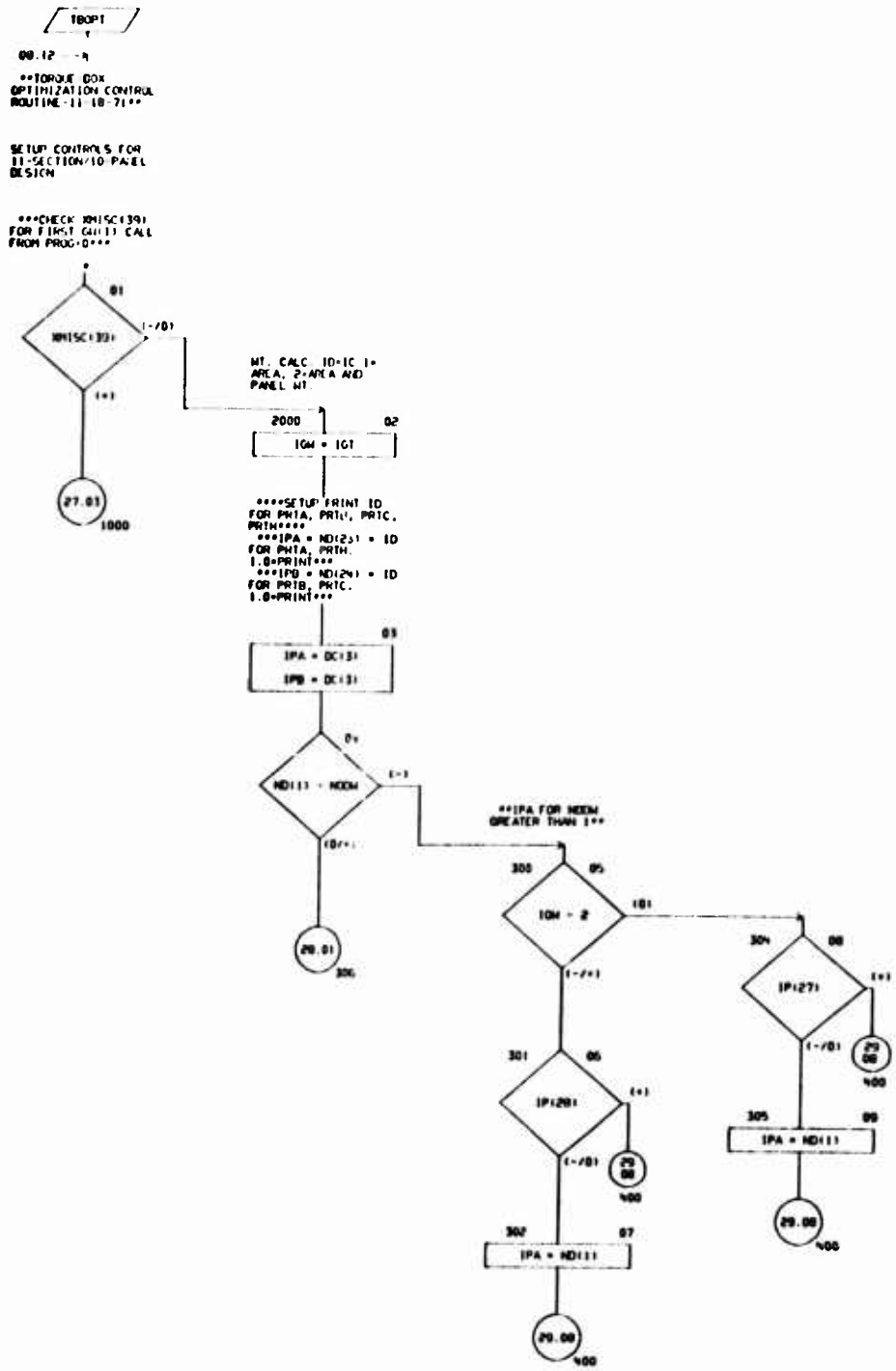

CHART TITLE - SUBROUTINE IOPT

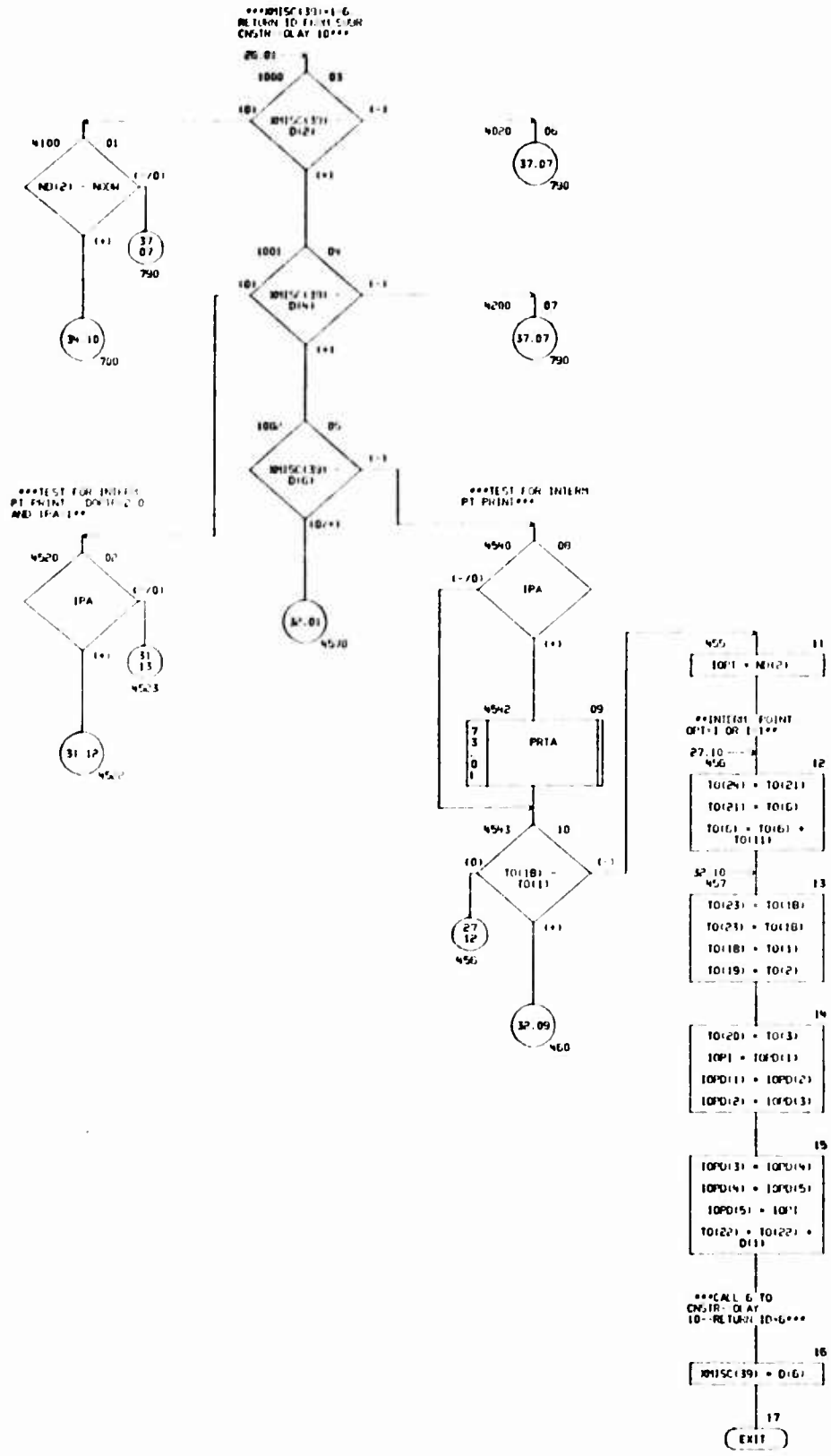

CHART TITLE SUBROUTINE IBOPT

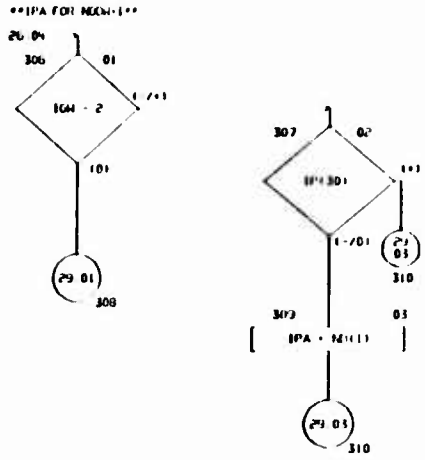

CHART TITLE - SUBROUTINE IBOPT

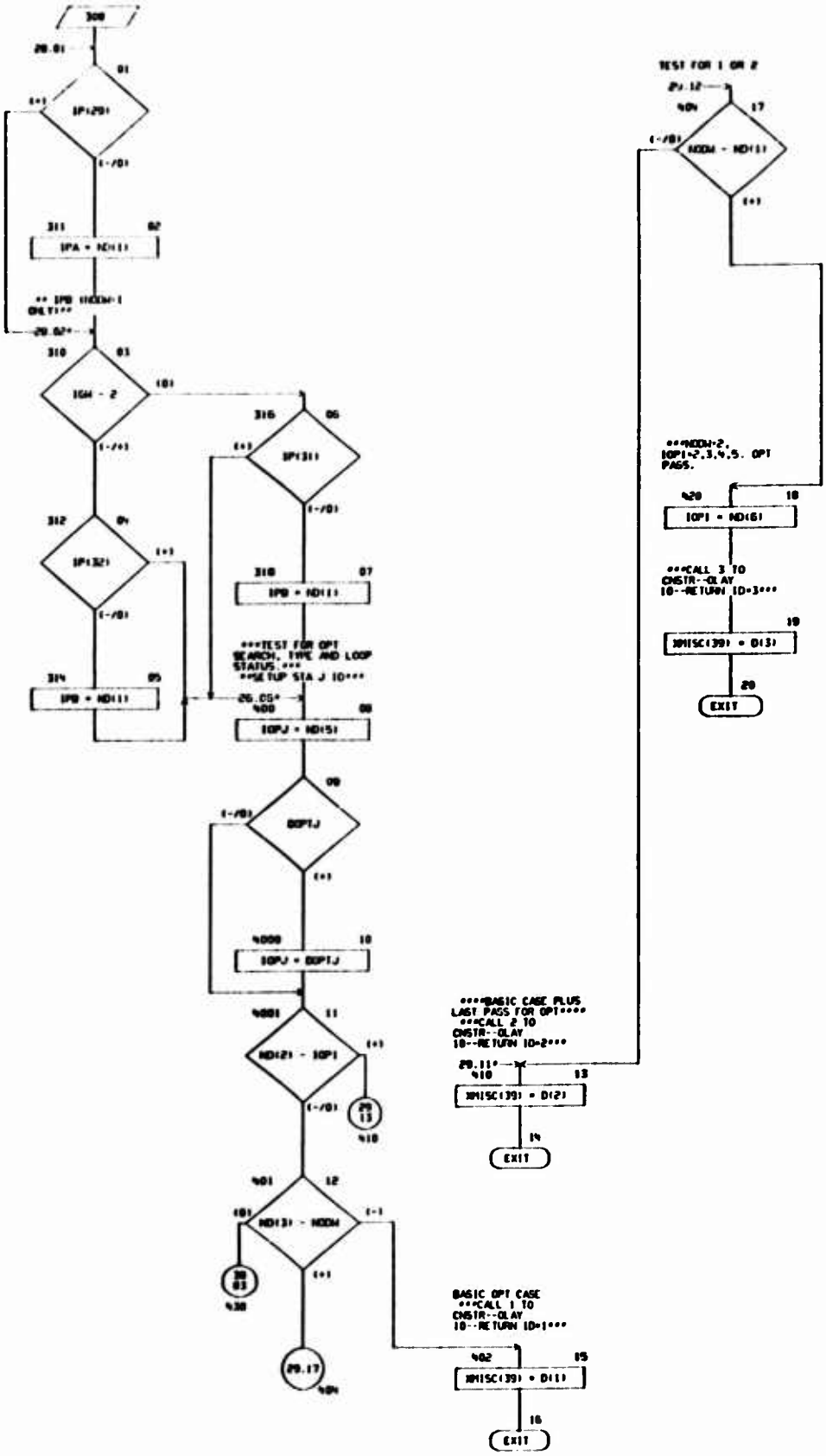

CHART TITLE - SUBROUTINE TEST

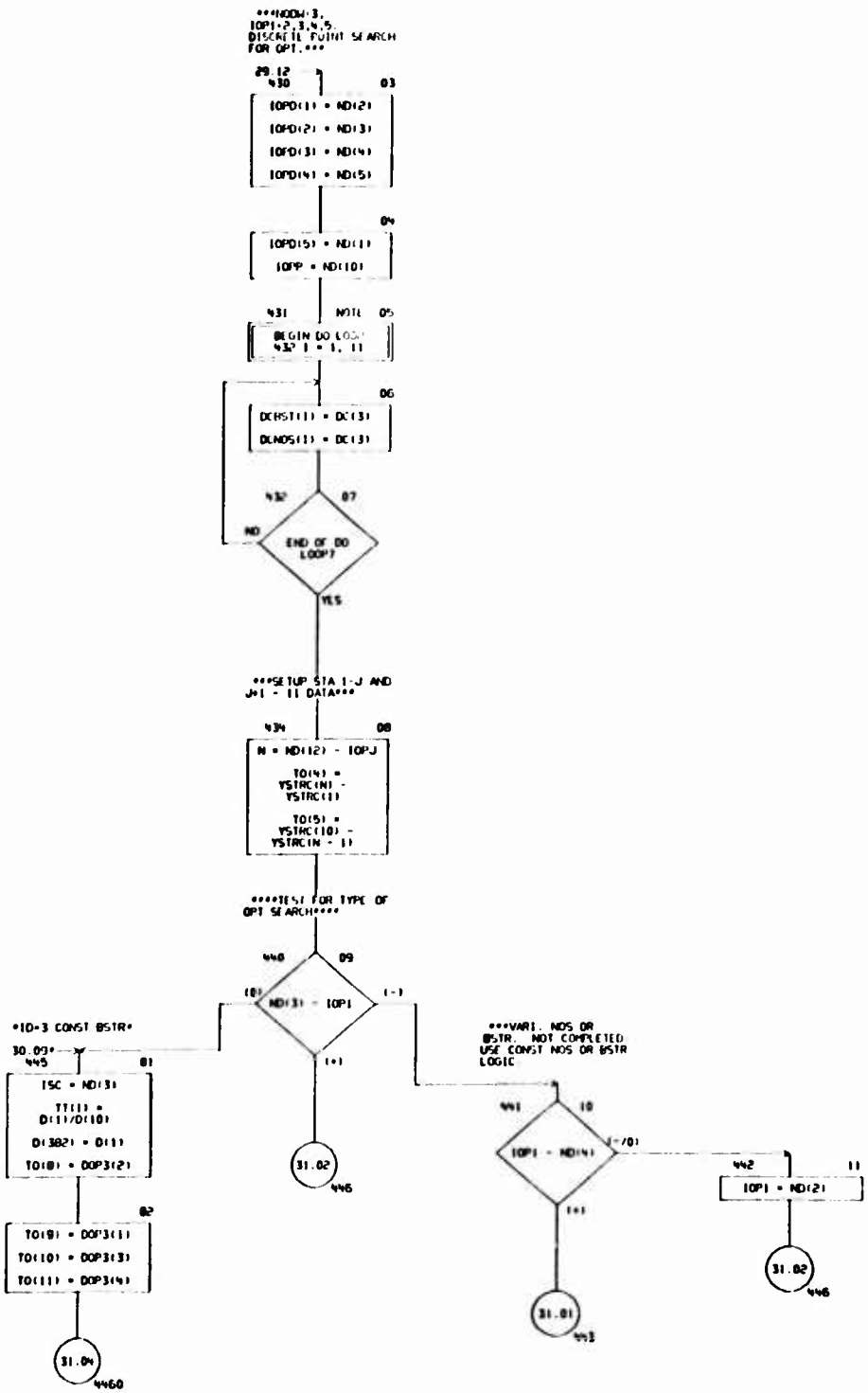

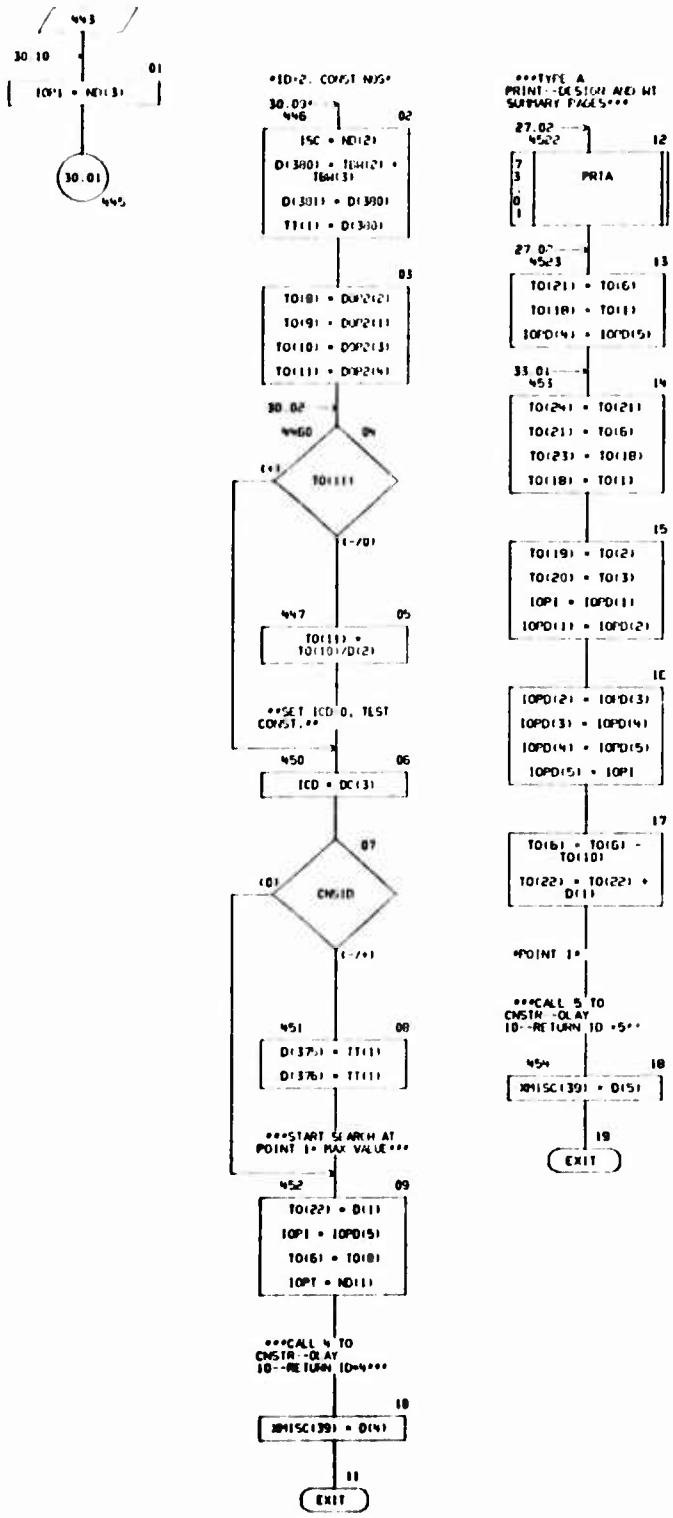
443
30.10
01
IOP1 = ND(3)
30.01
445
ID=2, CONST NOS
30.03*
446
02
ISC = ND(2)
D(380) = TB4(2) + TB4(3)
D(301) = D(380)
TT(1) = D(380)
03
TO(8) = DUP2(2)
TO(9) = DUP2(1)
TO(10) = DUP2(3)
TO(11) = DUP2(4)
30.02
448
04
TO(11)
(-/0)
447
05
TO(11) = TO(10)/D(2)
SET ICD=0, TEST CONST.
450
06
ICD = DC(3)
07
CNSID
(0)
(-/+)
451
08
D(375) = TT(1)
D(376) = TT(1)
START SEARCH AT POINT 1* MAX VALUE
452
09
TO(22) = D(1)
IOP1 = IOPD(5)
TO(6) = TO(8)
IOPT = ND(1)
CALL 4 TO CNSTR--OLAY ID--RETURN ID=4
10
XMISC(39) = D(4)
11
EXIT
TYPE A PRINT--DESIGN AND WT SUMMARY PAGES
27.02
452
12
PRTA
27.02
453
13
TO(21) = TO(6)
TO(18) = TO(1)
IOPD(4) = IOPD(5)
33.01
453
14
TO(24) = TO(21)
TO(21) = TO(6)
TO(23) = TO(18)
TO(18) = TO(1)
15
TO(19) = TO(2)
TO(20) = TO(3)
IOP1 = IOPD(1)
IOPD(1) = IOPD(2)
16
IOPD(2) = IOPD(3)
IOPD(3) = IOPD(4)
IOPD(4) = IOPD(5)
IOPD(5) = IOP1
17
TO(6) = TO(6) - TO(10)
TO(22) = TO(22) + D(1)
POINT 1
CALL 5 TO CNSTR--OLAY ID--RETURN ID =5
454
18
XMISC(39) = D(5)
19
EXIT

CHART TITLE - SUBROUTINE TGOPT

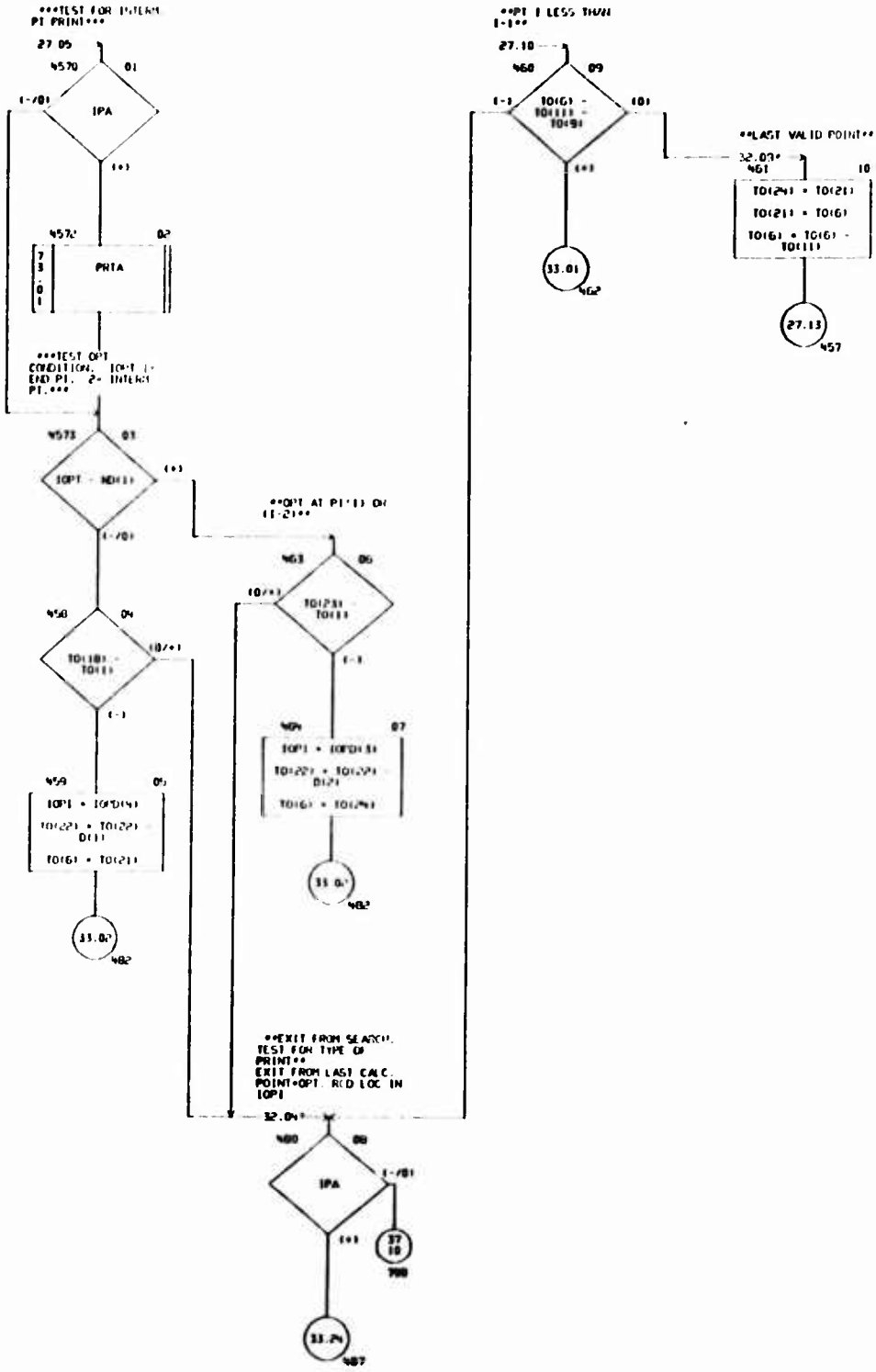

CHART TITLE - SUBROUTINE TGOPT

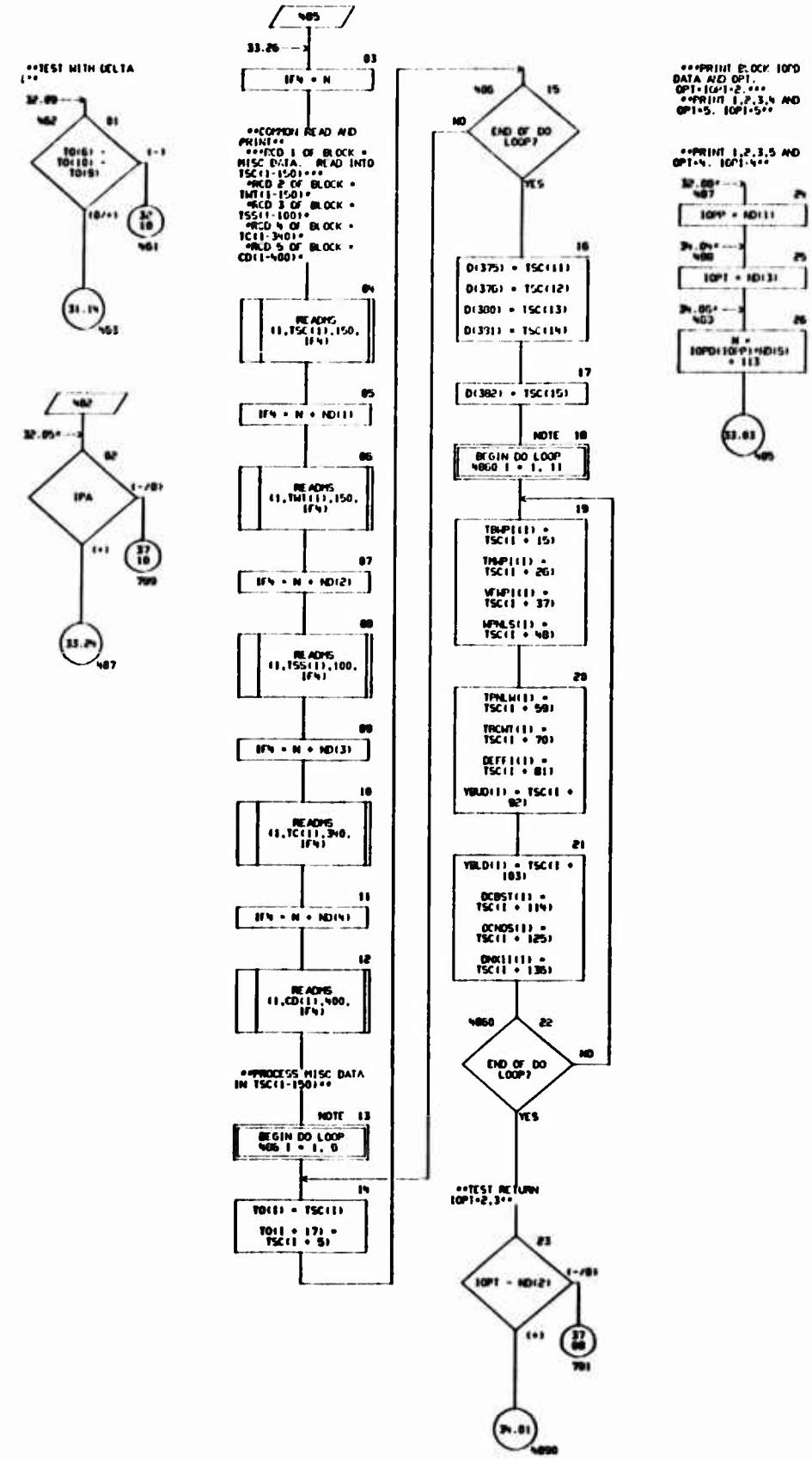

CHART TITLE - SUBROUTINE TROPT

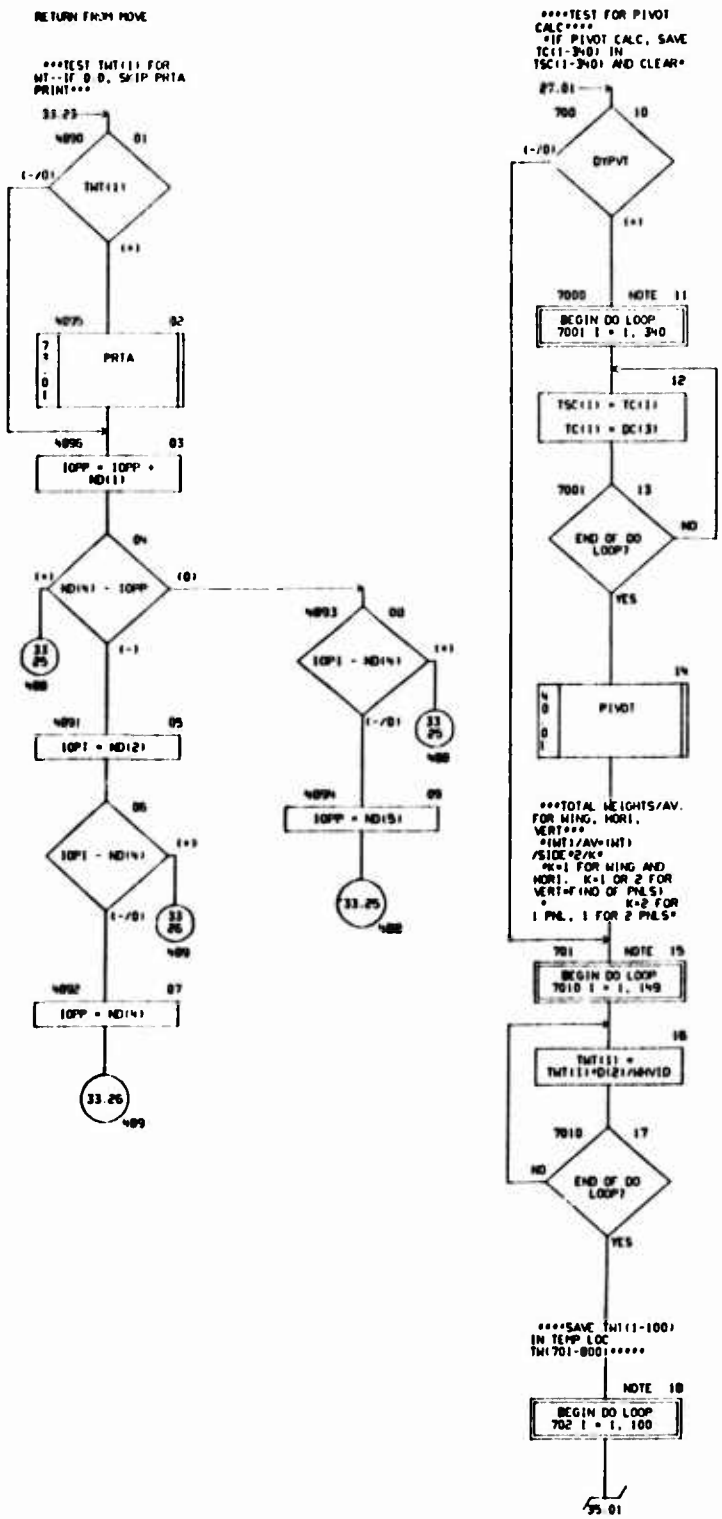

CHART TITLE - SUBROUTINE TESTPT

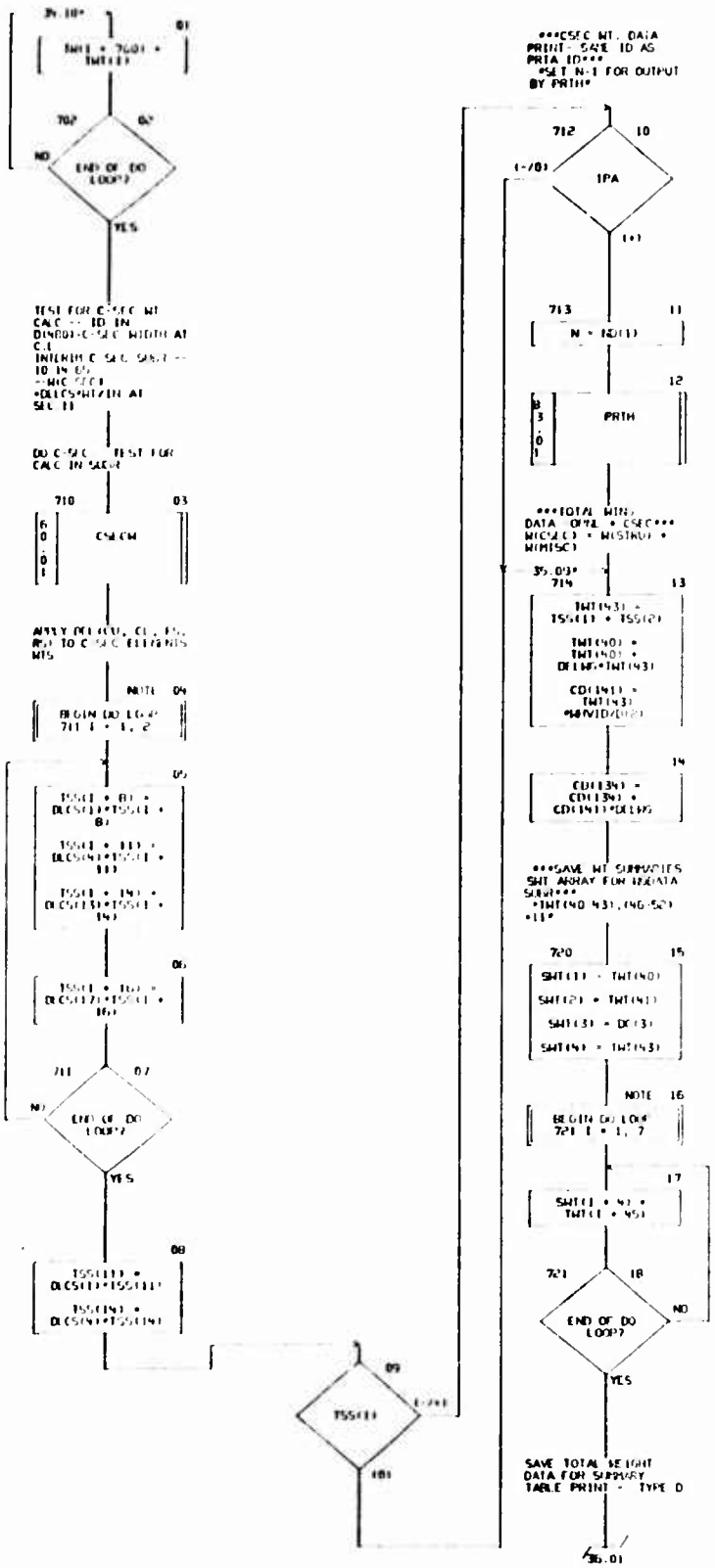

CHART TITLE - SUBROUTINE 16.9T

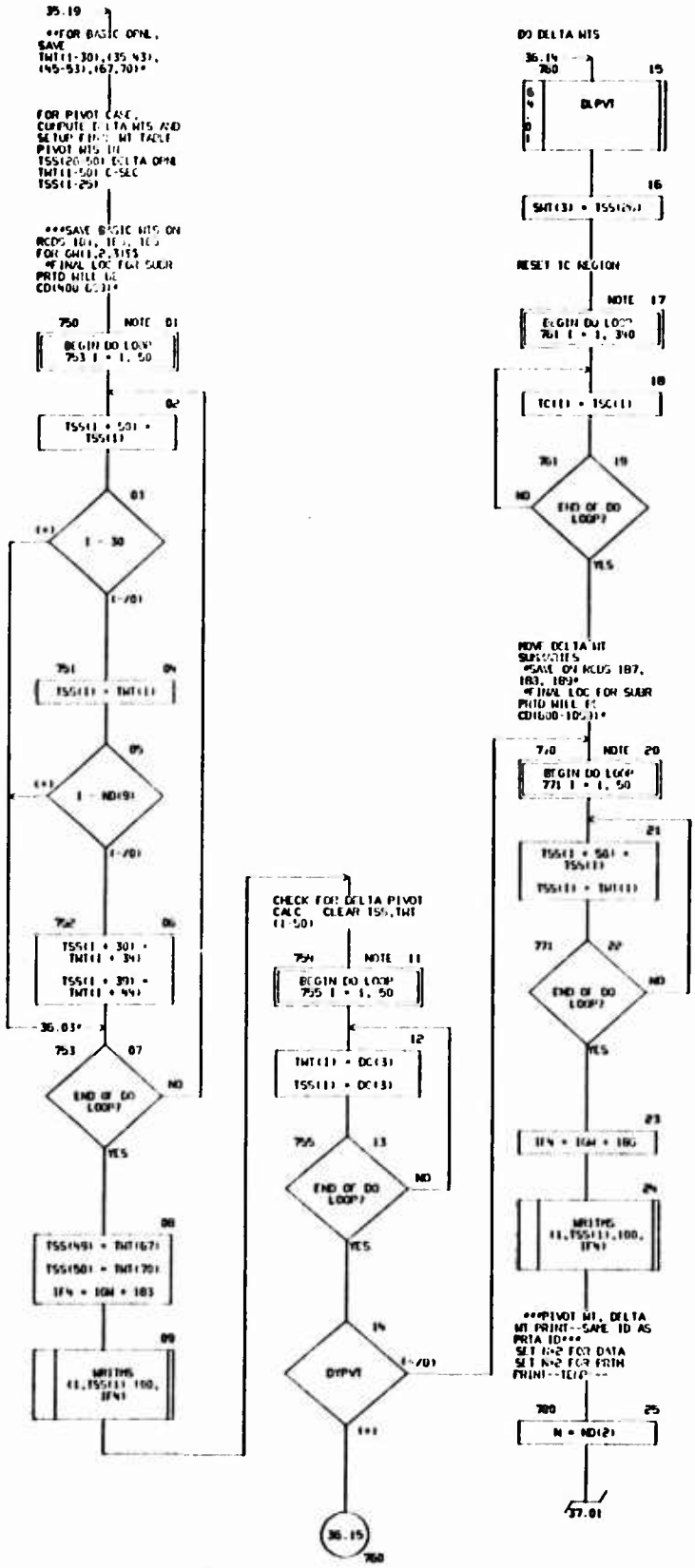

CHART TITLE - SUBROUTINE TESPT

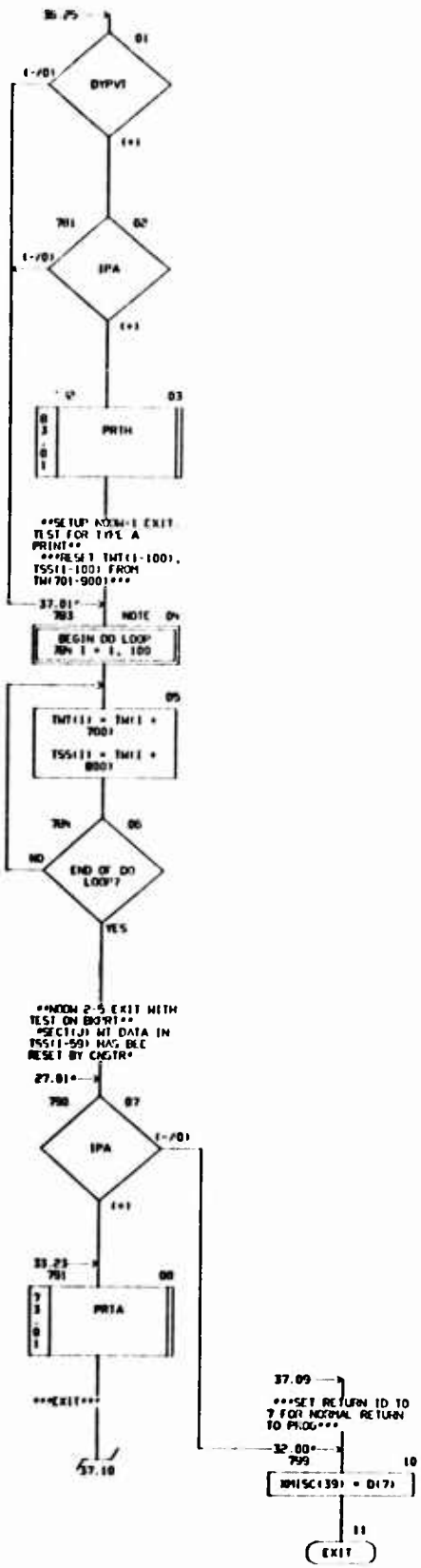

CHART TITLE - NONEXECUTABLE STATEMENTS

```
COMMON T(2000),D(2000),CD(2000),ND(100),N(990)
COMMON /IPRINT/ IP(60)
COMMON /MISC/ XM(5C(100)
DIMENSION DC(100),TC(200),TSS(420),TSS(100),TWT(400),TSEC(300),
YSTRC(11),TC(400),T(126),T(140),
        DLCS(24),SHT(11),
YBUD(11),YLLD(11),
TBH(11),
MPNLS(11),TPNLW(11),TCONT(11),
TBMP(11),TMMP(11),VMMP(11),
DLFF(11),DMX(11(11),
DCBST(11),DCNOS(11),
DOP2(3),DOP3(3),DOP4(9),DOP5(9),DOPD(5)
EQUIVALENCE (DC(1),D(190)),(T(  (1),T(134)),(TSC(1),T(154)),
(TSS(1),T(195)),(TWT(1),CD(110)),(TSEC(1),CD(150)),
(TC(1),T(960)),(T0(1),T(970)),(T(1),T(137)),
(YSTRC(1),TSEC(1061),
                (DLCS(1),D(902)),(DCLW0,T(167)),
(CNSTD,D(961)),(WMVD,T(57)),(TDSA(1),T(5A2)),(DIFVT,D(200)),
(I,ND(29)),(K,ND(30)),(N,ND(31)),(TCC,ND(49)),(TSC,ND(22)),
(TOPT,ND(73)),(TOPT,ND(74)),(TOPD(1),ND(75)),(TOPJ,ND(C  ),
(TOPP,ND(81)),(TOPT,ND(82)),(TOPS,ND(  )),(TOPC,ND(84)),
(TSEC,ND(55)),(NOOW,ND(56)),(TPN,ND(93)),(TOW,ND(61)),(TGT,ND(57))
EQUIVALENCE (SHT(1),T(79)),(YBUD(1),T(67)),(YLLD(1),T(90)),
(DLFF(1),T(80)),(DMX(1(1),T(72)),
(DCBST(1),D(70)),  (DCNOS(1),D(76)),
(MPNLS(1),T(64)),(TPNLW(1),T(65)),(TCONT(1),T(70)),
(TBMP(1),T(74)),(TMMP(1),T(78)),(VMMP(1),T(76)),
(IPA,ND(23)),(IPB,ND(24)),
(DOP2(1),D(136)),(DOP3(1),D(137)),(DOP4(1),D(135)),
(DOP5(1),D(138)),(DOPJ,D(136))
```

CHART TITLE INTRODUCTION CONTENTS

```
*****************************************************************

      *****SUBROUTINE PIVOT*****
   ***PIVOT STRUCTURE SYNTHESIS AND WEIGHT EVALUATION***

*****************************************************************

                SUBROUTINE  PIVOT

   REVISION -01 21 C5 -  CONVERT TO NA 614 FORMAT (STR)
   29SEP105 ORIGINAL

              CONVERT TO FORT IV  MARCH 1972
```

CHART TITLE - SUBROUTINE PIVOT

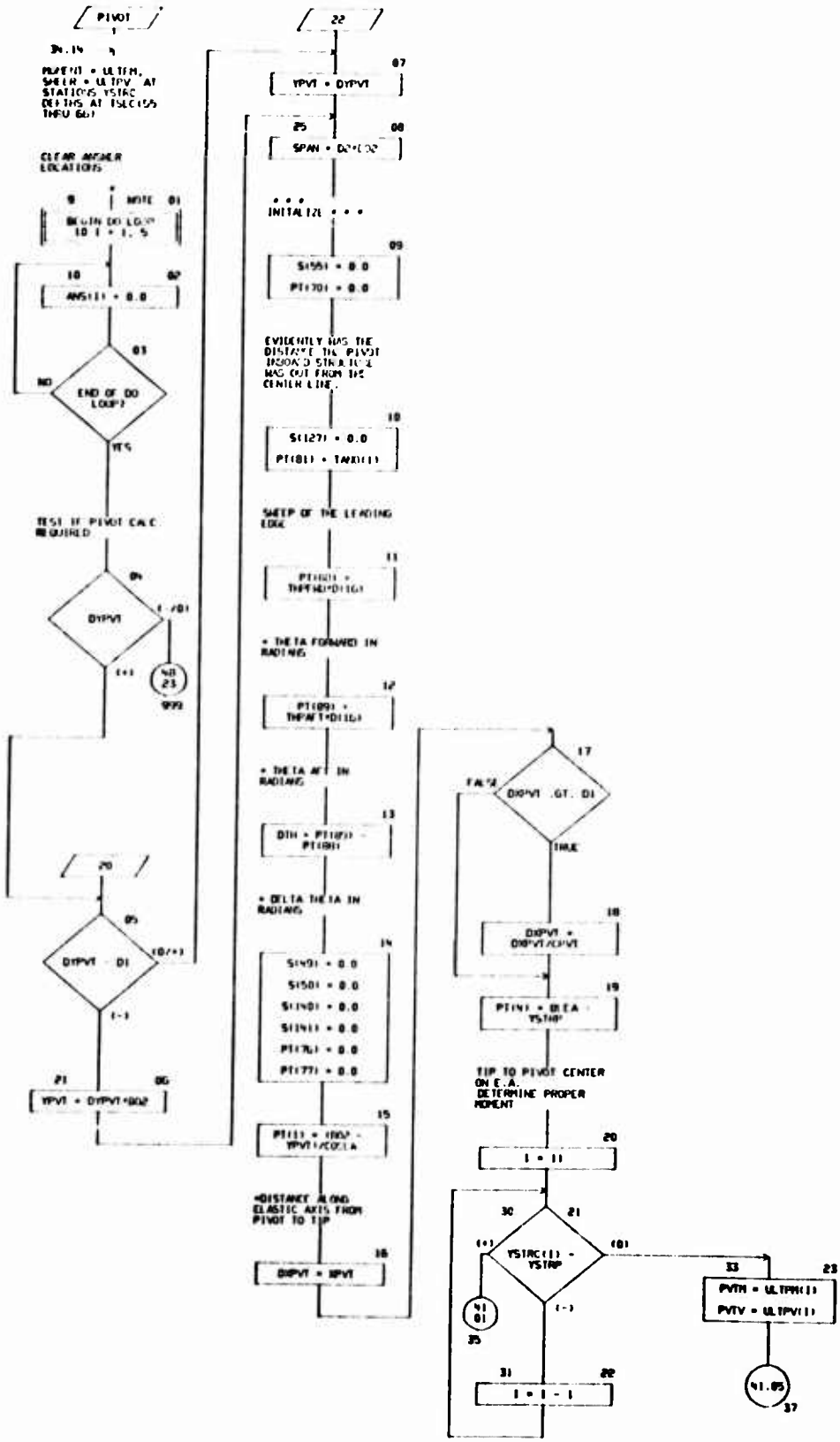

CHART TITLE - SUBROUTINE PIVOT

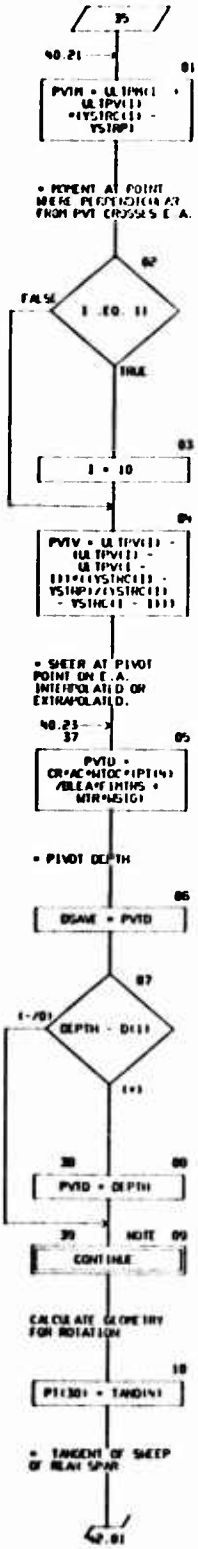

CHART TITLE - SUBROUTINE PIVOT

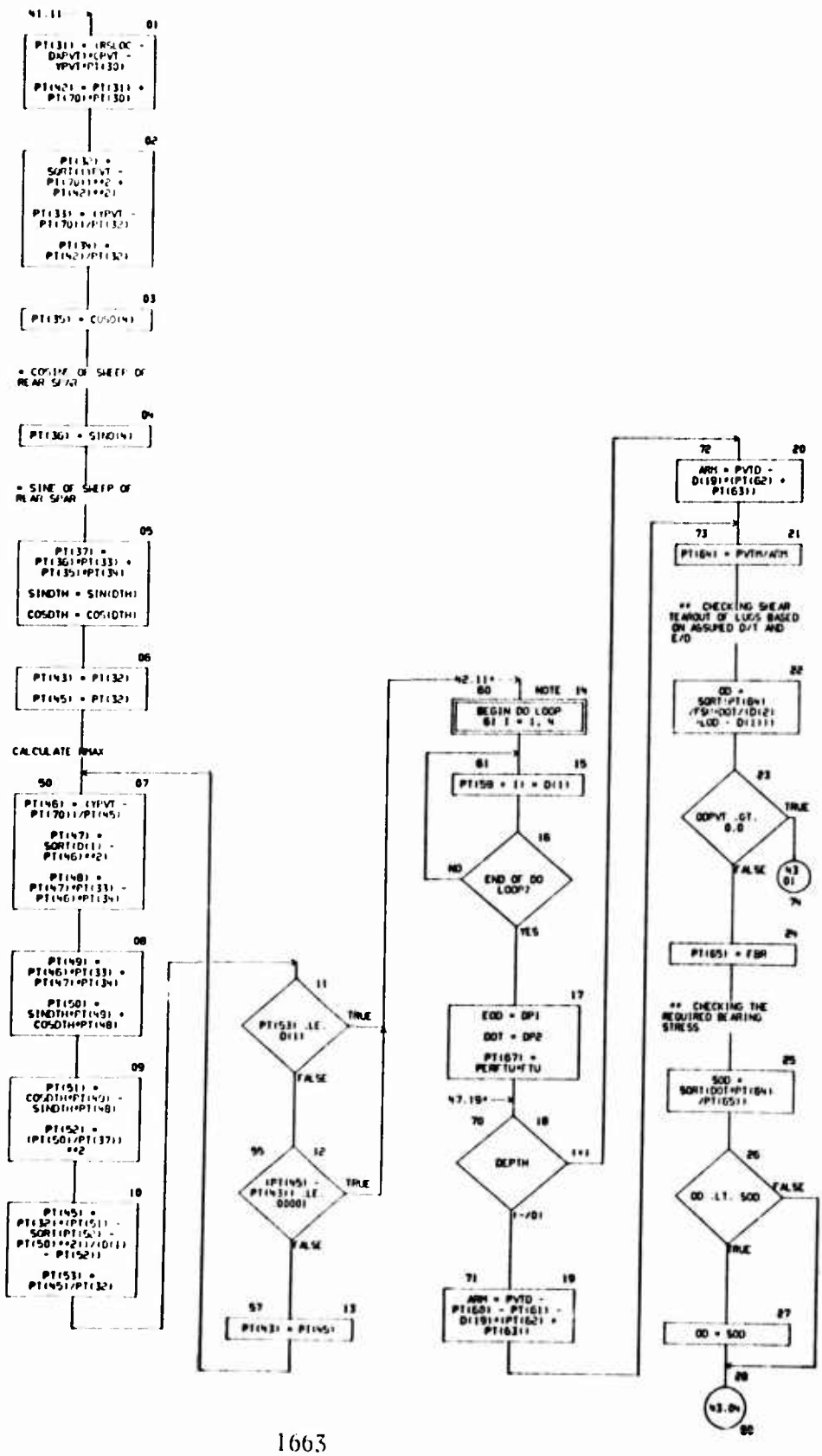

CHART TITLE - SUBROUTINE PIVOT

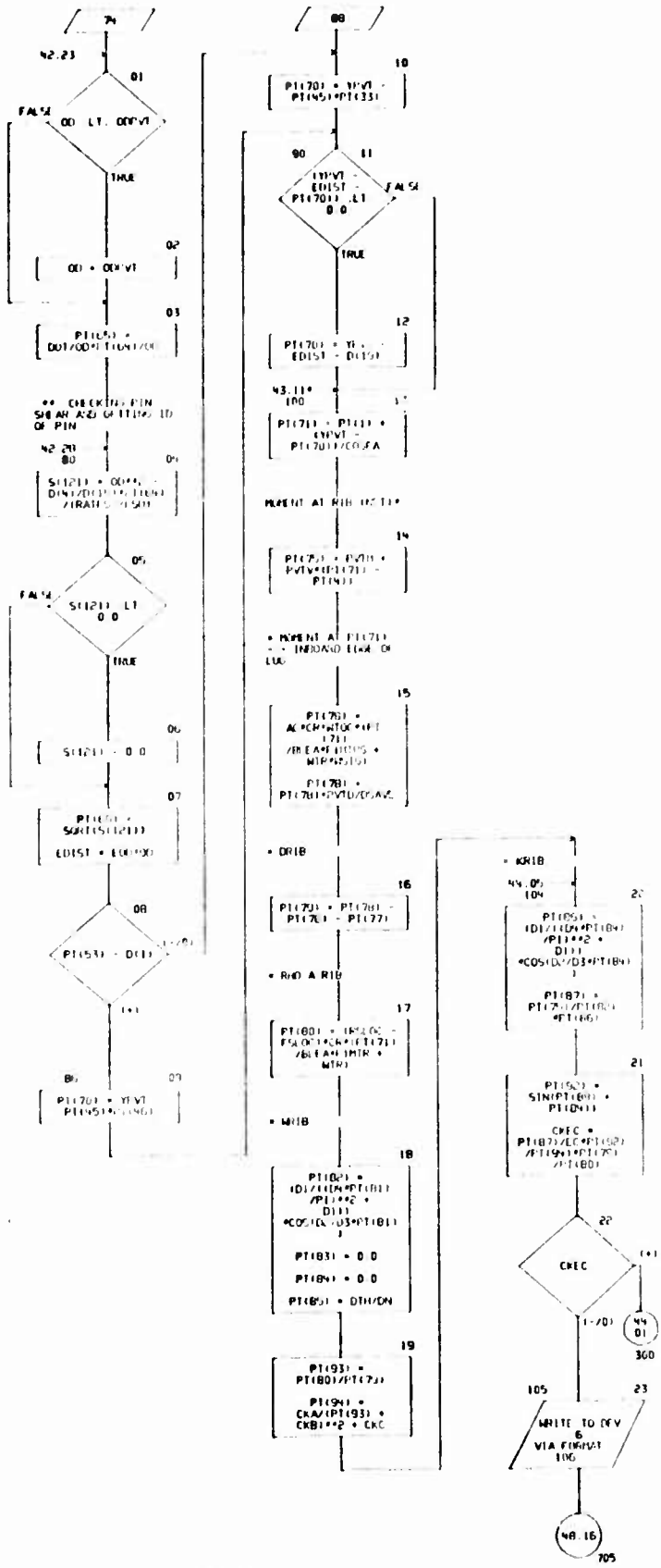

CHART TITLE - SUBROUTINE PIVOT

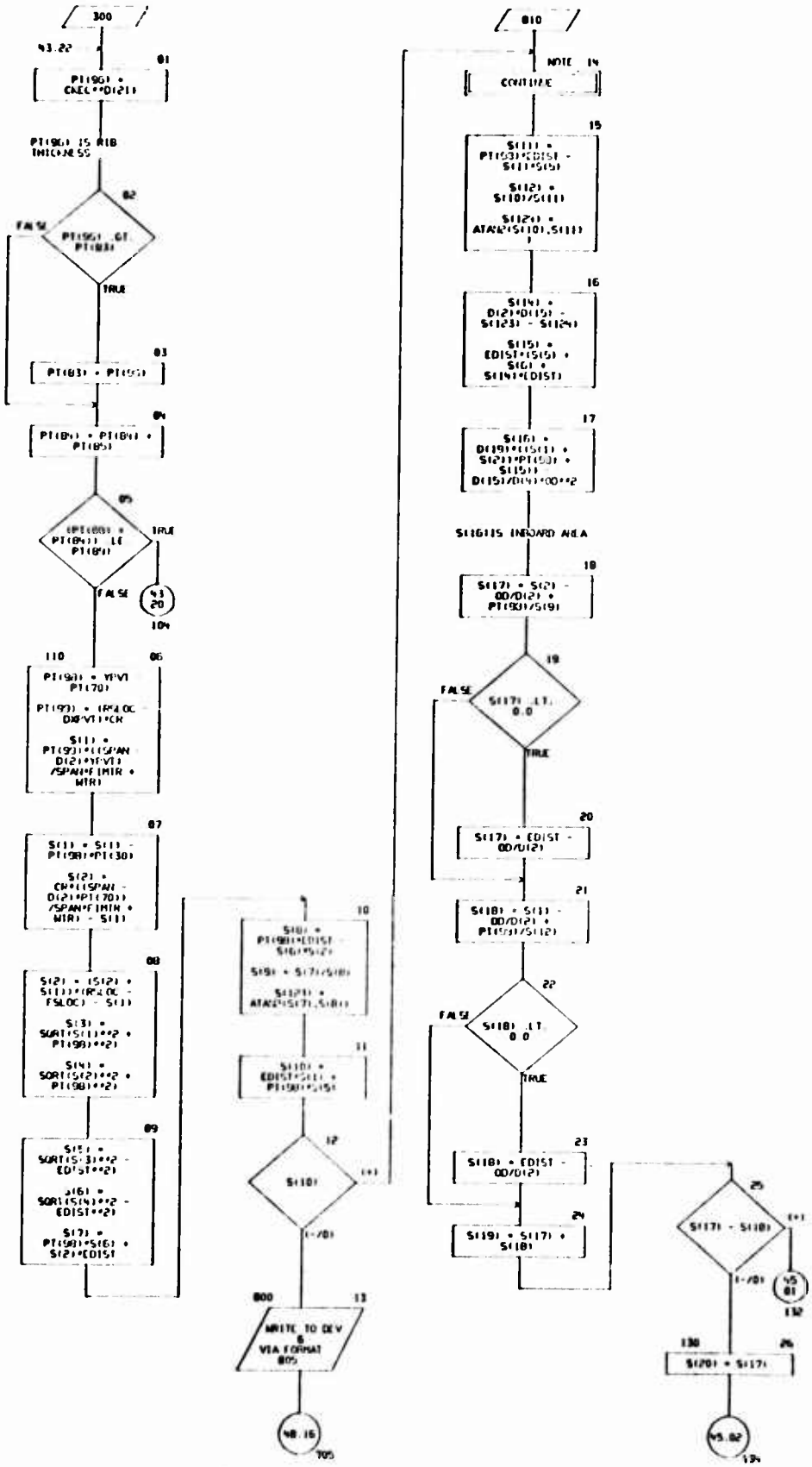

CHART TITLE - SUBROUTINE PIVOT

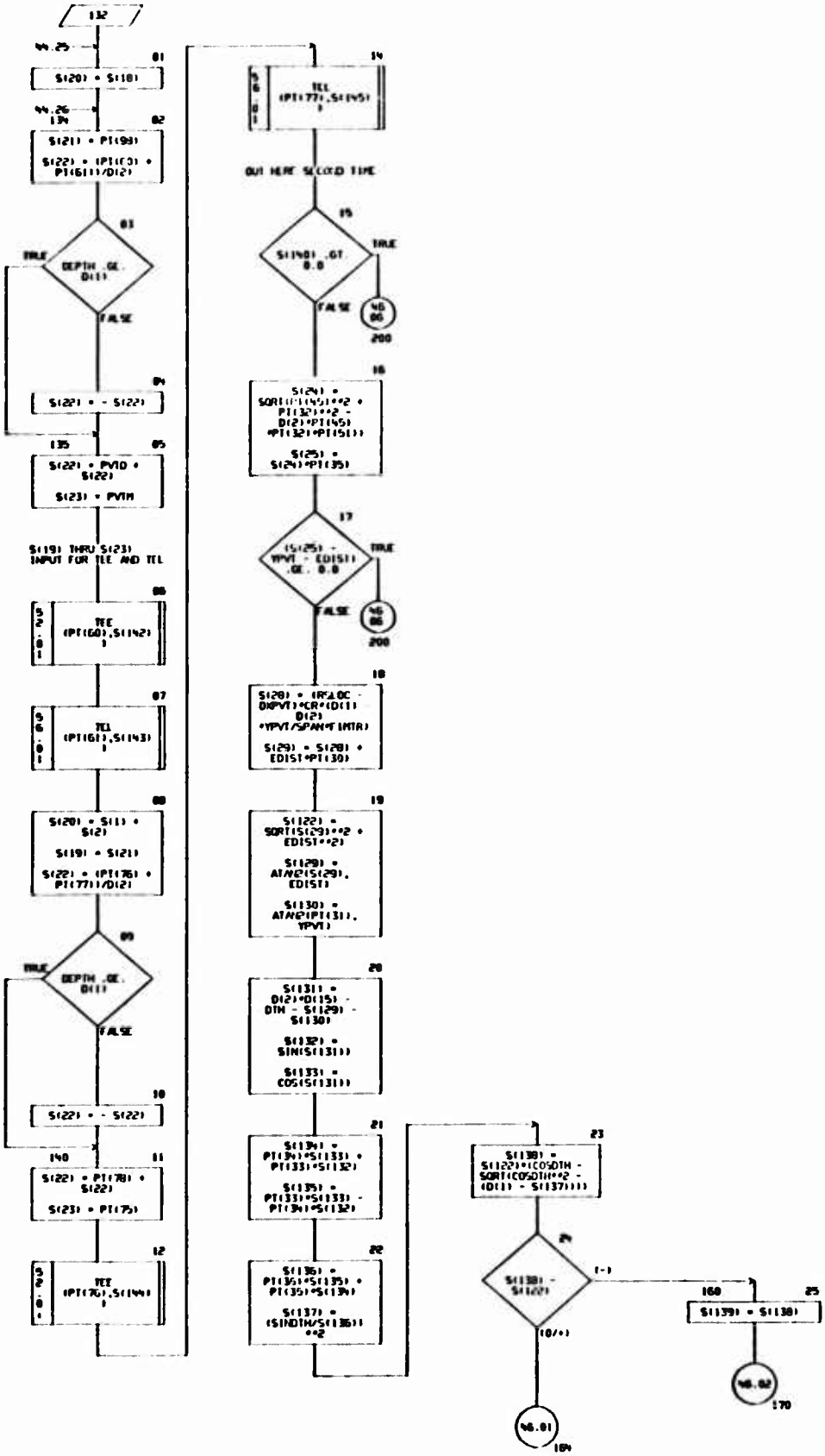

CHART TITLE - SUBROUTINE PIVOT

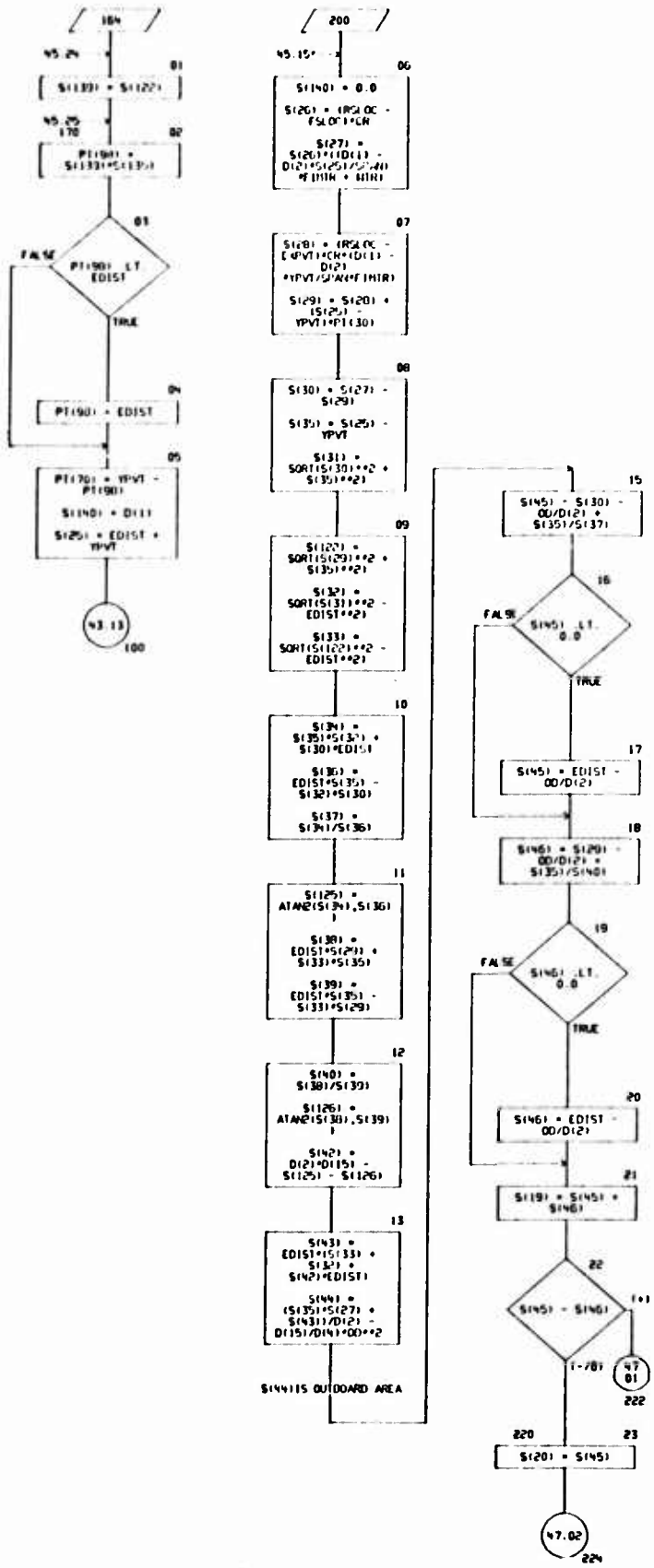

CHART TITLE - SUBROUTINE PIVOT

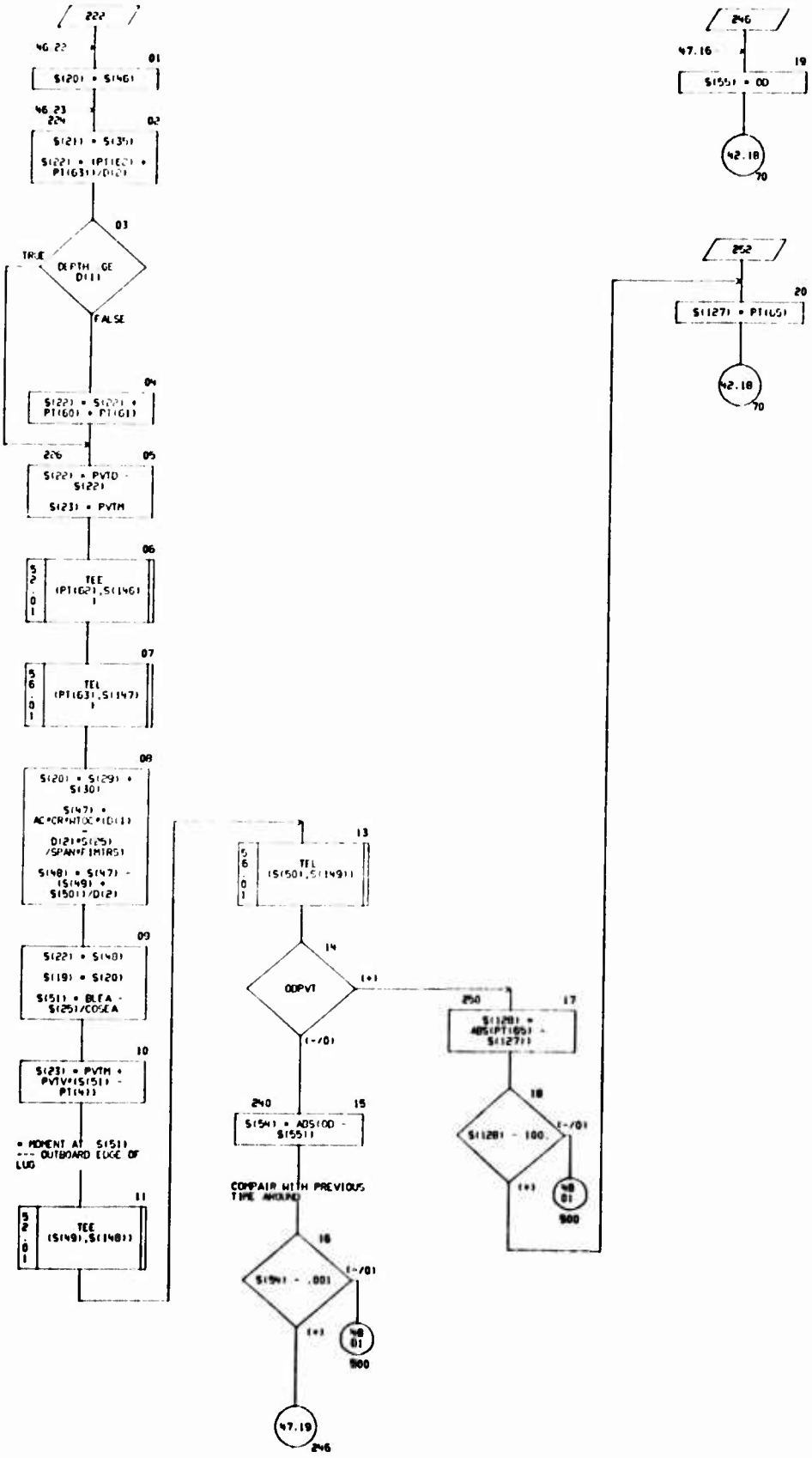

CHART TITLE - SUBROUTINE PIVOT

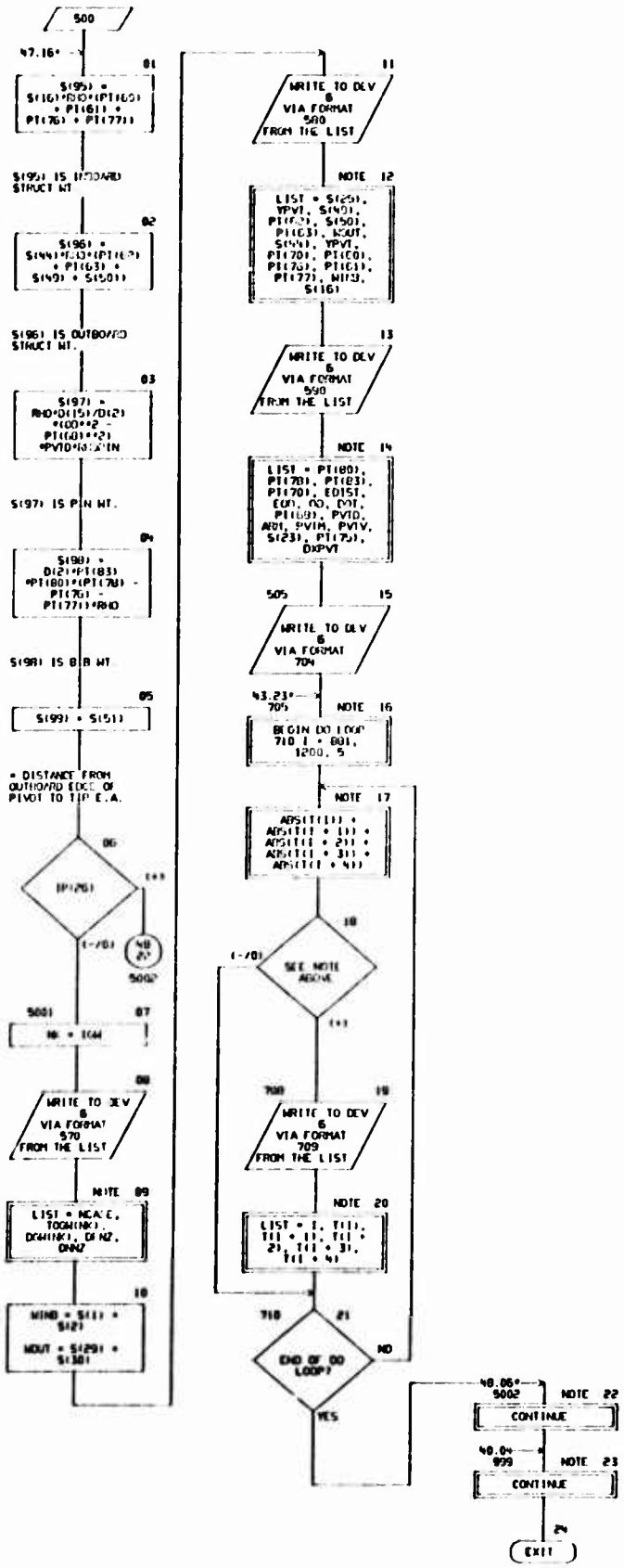

CHART TITLE - NON PROCEDURAL STATEMENTS

```
      COMMON    TCOM(6220),TW(930)
      COMMON /IPRINT/ IP(80)
      DIMENSION  T(2060),   D(2060),   CD(2000),   S(200),   PT(100)
      .  ANS(5)   TSEC(200), ULTPM(1), ULTPV(1),   YSTRC(1)
      ,TOGH(3),DGH(3),ND(100)
      ,DMTLP(19) , TAND(9),SIND(6), COSD(6)
      EQUIVALENCE          (TCOM(1), T(1))
      , (T(12),BO2),        (T(38),TANAC),      (T(70),FIPTR)
      , (T(77),FIMTR),      (T(78),FIMIRS),     (T(81),FLEA)
      , (T(45),CPVT),       (T(41),YSTRP),      (T(52),CR)
      , (T(140),SIND(1)),   (SIND(3),SINEA)
      , (T(146),COSD(1)),   (COSD(3),COSEA)
      , (T(122),TAND(1))
      , (T(900),YPVT),      (T(901),PT(1)),     (T(1001),S(1))
      EQUIVALENCE (DMTLP(1),CD(1000))
      , (DMTLP(2),DHD),     (DMTLP(5),EC),      (DMTLP(10),FTS)
      , (DMTLP(11),RHO),    (DMTLP(12),FTU)
      ,(D(190),RATFSU), (D(191),RLOPIN), (DMTLP(16),FSU)
      EQUIVALENCE           (PT( 9),PVTH),      (PT(101),PVTD)
      , (PT(8),PVTV),       (PT(100),SCAN)
      ,    (DXPVT,PT(51)),   (PT(2),CKEC),      (PT(3),ARM)
                    ,       (PT(38),DTH),       (PT(39),SINDTH)
      ,   (PT(40),COSDTH),  (PT(54),EOD),       (PT(55),DOT)
      ,   (PT(56),SOD),     (PT(66), OD),       (PT(69),EDIST)
      ,   (IGM,ND(57)),    (NCASE,ND(60)),    (NPAGE,ND(65))
      ,   (TOGH(1),D(80)), (DGH(1),D(182)),   (DPNZ,T(20))
      ,   (DNNZ,T(21)),    (BXPRT,D(474)), (ND(1),TCOM(6121))
      EQUIVALENCE            (TCOM(4121),CD(1)),   (CD(1001),TSEC(1))
      , (TSEC(1),ULTPM(1)),  (TSEC(12),ULTPV(1)), (TSEC(106),YSTRC(1))
      EQUIVALENCE  (S(95), ANS(1))
      EQUIVALENCE           (TCOM(2061),D(1))
      ,   (D(124),AC),      (D(125),FSLOC),     (D(126),RSLOC)
      ,   (D(127),EALOC),                       (D(195),FBR)
      ,   (D(198),DDPVT),   (D(199),DN),        (D(200),DYPVT)
      ,   (D(201), XPVT),   (D(202),THETMD),    (D(203),THPAFT)
      ,   (D(240),WAREA),   (D(241),WAR),       (D(242),WSMP)
      ,   (D(243),WIOC),    (D(244),WTR),       (D(245),WSIG)
      ,   (D(192),CKA),    (D(193),CKB),        (D(194),CKC)
      ,   (D(156),DP1),     (D(157),DP2),      (D(189),PERFTU)
      ,   (D(186),DEPTH)
      EQUIVALENCE   (D(1),D1), (D(2),D2), (D(3),D3), (D(4),D4)
      , (D(5),D5), (D(6),D6), (D(7),D7), (D(8),D8), (D(9),D9)
      , (D(10),D10), (D(11),D11), (D(12),D12), (D(15),P1)
106   FORMAT ( 43H1 ERROR IN PIVOT, RIB THICKNESS IS NEGATIVE  //
        9H   T DUMP  // )
805   FORMAT(1H1, 78H S(101)=0.0 AT LINE 2670 IN SUBROUTINE PIVOT WHICH W
      ILL GIVE /0.0 AT LINE 2760. /  30H CHANGE THE INPUT DATA IN LOCATI
      ON 201/////)
570   FORMAT(1H1,89X,20H** PIVOT - IP(26) **/
            1H ,5H CASE, I4,5X, 5HTOGH=, F9.1,2X, 4HDGH=, F9.1,
      5X, 4H+NZ=, F6.3,2X, 4H-NZ=, F6.3)
580   FORMAT (1H0,15X , 8HOUTBD BP, 3X,7HINBD BP,3X,8HTU OUTBD,3X,
      7HTU INBD,3X,8HTL OUTBD,3X, 7HTL INBD, 3X, 12HSPLICE CHORD,6X,
      4HAREA//13H    OUTER LUG, 1X, 2F10.2,F11.4,F10.4,F11.4,F10.4,
      F12.2,F10.0/13H     INBD LUG,1X,2F10.2,F11.4,F10.4,F11.4,F10.4,
      F12.2,F10.0)
590   FORMAT (1H0,4X,12H RIB WIDTH =,F10.2, 12H RIB DEPTH =,F10.2,
      12H     RIB T =,  F10.4, 12H  RIB B.P. =, F10.2//17H     EDGE DIST
      . =, F10.2,3X, 9HE/D =, F10.2, 3X, 10HPIN O.D. =,F6.2 ,3X
       9HD/T =, F6.2, 3X,10HPIN I.D. =,F10.2//17H    PIVOT
      F10.2,3X,12HCOUPLE ARM =, F10.2,3X,10HPIVOT MX =,E13.5,3X,
      10HPIVOT SZ =,E13.5 //1H  ,4X,10HMX OUTBD =, E13.5 , 3X,
       9HMX INBD = , E13.5 / 5X, 7HDXPVT =, E13.5 )
```

CHART TITLE - NON-PROCEDURAL STATEMENTS

```
704     FORMAT (1H1, 5X, 15HT  AT END PIVOT //)
709     FORMAT ( I17, 5E18.7 )
```

CHART TITLE - INTRODUCTORY COMMENTS

```
*****************************************************************

      *****SUBROUTINE TEE*****
   ***PIVOT DESIGN/SYNTHESIS DATA EVALUATION***

*****************************************************************

                    SUBROUTINE TEE
                    USED BY PIVOT

   ORIGINAL 4 OCT 65
   REVISED - 01 21-66- CONVERT TO NAGIN FORMAT--STR--
   CHANGED FOR 360 FORTRAN IV  MARCH 72

   USE  COMMON AND EQUIVALENCE FROM PIVOT 3 72
```

CHART TITLE - NON-PROCEDURAL STATEMENTS

```
704     FORMAT (1H1, 5X, 15HT  AT END PIVOT ///)
709     FORMAT ( I17, 5E18.7 )
```

CHART TITLE - INTRODUCTORY COMMENTS

```
*****************************************************************

      *****SUBROUTINE TEE*****
   ***PIVOT DESIGN/SYNTHESIS DATA EVALUATION***

*****************************************************************

                    SUBROUTINE TEE
                    USED BY PIVOT

   ORIGINAL 4 OCT 65
   REVISED - 01-21-66 - CONVERT TO WATIN FORMAT - STR-
   CHANGED FOR 360 FORTRAN IV MARCH 72

   USE COMMON AND EQUIVALENCE FROM PIVOT 3 72
```

CHART TITLE - SUBROUTINE TEE(TTT,TTX)

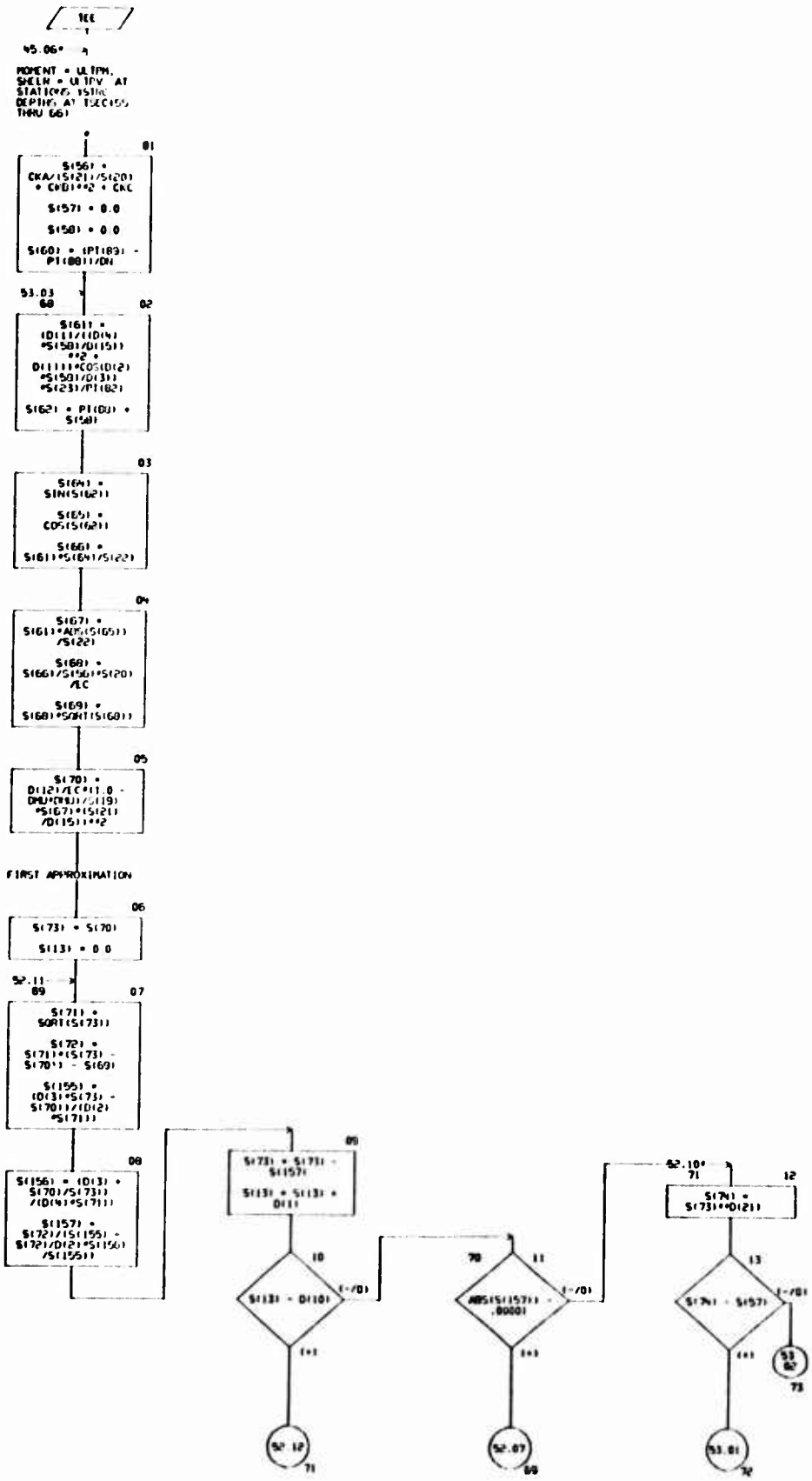

CHART TITLE - SUBROUTINE TEE(TTT,TTX)

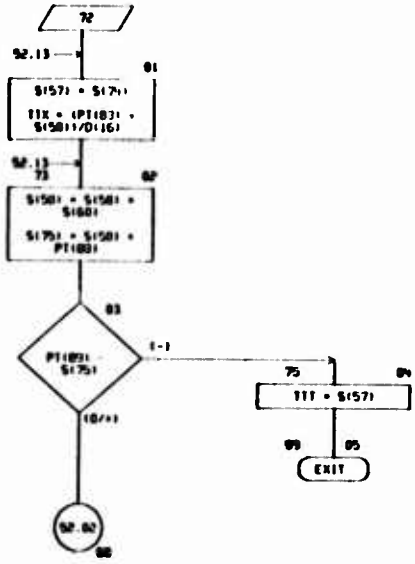

CHART TITLE - NON PROCEDURAL STATEMENTS

```
COMMON    TCOM(6220),TH(900)
DIMENSION  T(2060),  D(2060),  CD(2000),  S(200),  PT(100)
 , ANS(5),  TSEC(200), (ULTPM(1)), ULTPV(1)),  YSTRC(1))
,TOGH(3),DGH(3),ND(100),PDATE(2)
 , DMTLP(17), TAN(19),SIND(6), COSD(6)
EQUIVALENCE          (TCOM(1), T(1))
 , (T(12),D02),        (T(38),TANAC),      (T(70),FIPTR)
 , (T(77),FIMTR),      (T(78),FIMIS),      (T(81),BLCA)
 , (T(95),CPVT),       (T(93),YSTRP),      (T(52),CR)
 , (T(140),SIND(1)),   (SIND(3),SIDCA)
 , (T(146),COSD(1)),   (COSD(3),COSLA)
 , (T(122),TAN(1))
 , (T(900),YPVT),      (T(901),PT(1)),     (T(1001),S(1))
EQUIVALENCE  ( DMTLP(1),CD(1905)),
  (DMTLP(2),DMU),      (DMTLP(5),EC),      (DMTLP(10),FTS)
 , (DMTLP(11),RAD),    (DMTLP(12),FTU)
EQUIVALENCE            (PT( 9),PVTM),      (PT(10),PVTD)
 , (PT(8),PVTV),       (PT(100),SPAN)
 ,    (DXPVT,PT(5))
                 ,     (PT(38),DTH),       (PT(39),SINDTH)
 ,   (PT(40),COSDTH),  (PT(54),EOD),       (PT(55),DDT)
 ,   (PT(56),SOD),     (PT(66), OD),       (PT(69),EDIST)
 ,   (IGH,ND(57)),     (NCASE,ND(60)),     (NPAGE,ND(85))
 ,   (TOGH(1),D(80)), (DGH(1),D(102)),  (DFNZ,T(201))
 ,   (DNNZ,T(211)),    (DXPRT,D(974)), (ND(1),TCOM(6121))
 ,   (PDATE(1)),D(2055))
EQUIVALENCE            (TCOM(6121),CD(1)),  (CD(1501),TSEC(1))
 , (TSEC(1),ULTPM(1)),  (TSEC(12),ULTPV(1)), (TSEC(166),YSTRC(1))
EQUIVALENCE  (S(95), ANS(1))
EQUIVALENCE          (TCOM(2061),D(1))
 ,   (D(124),AC),      (D(125),FSLOC),     (D(126),RSLOC)
 ,   (D(127),EALOC),                       (D(195),FBR)
 ,   (D(198),DDPVT),   (D(199),DN),        (D(200),DYPVT)
 ,   (D(201), XPVT),   (D(202),THPFND),    (D(203),THPAFT)
 ,   (D(240),WAREA),   (D(241),WAR),       (D(242),WSMP)
 ,   (D(243),WTOC),    (D(244),WTR),       (D(245),WSIG)
 ,   (D(192),CKA),    (D(193),CKB),        (D(194),CKC)
 ,   (D(156),DP1),     (D(157),DP2),      (D(189),PENETU)
 ,   (D(186),DEPTH)
```

CHART TITLE - INTRODUCTORY COMMENTS

```
*****************************************************************

      *****SUBROUTINE TEL*****
  ***PIVOT DESIGN/SYNTHESIS DATA EVALUATION***

*****************************************************************

                          SUBROUTINE TEL
                          USED BY PIVOT

  ORIGINAL      50CT65
  REVISION      1-21-66     CONVERT FOR 4' CIN  STR.
  REVISION      MARCH72     CHANGE  TO FORTRAN IV
```

CHART TITLE - SUBROUTINE TEL(TL,TX)

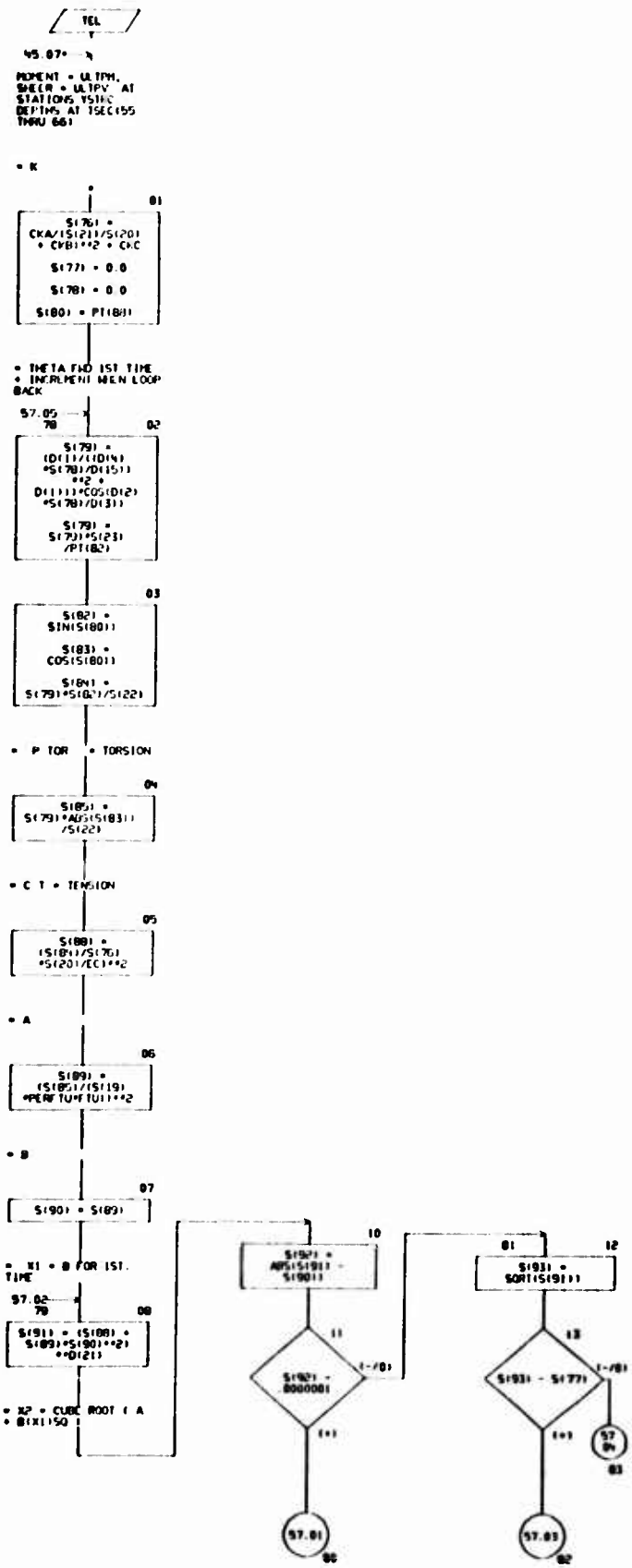

CHART TITLE - SUBROUTINE TEL(TL,TX)

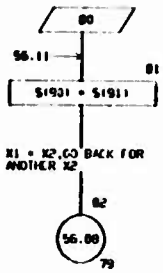

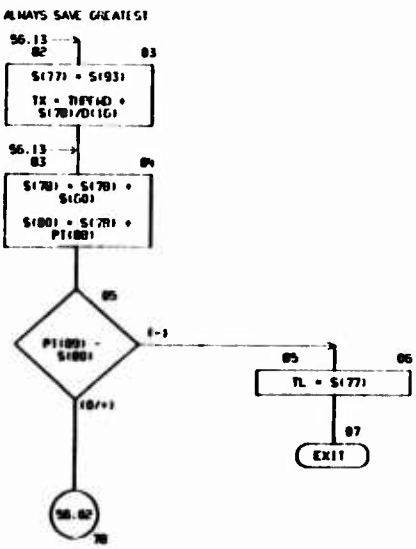

CHART TITLE - NON PROCEDURAL STATEMENTS

```
COMMON    TCOM(6220),TW(900)
DIMENSION  T(2060),   D(2000),  CD(2000),  S(200),  PT(100)
,  ANS(5),  TSEC(200), ULTPM(11), ULTPV(11),  YSTRC(11)
,TOGM(3),DGM(3),ND(100),PDATE(2)
 ,DMTLP(17), TAND(9),SIND(6), COSD(6)
EQUIVALENCE          (TCOM(1), T(1))
, (T(12),BO2),        (T(38),TANAC),      (T(70),FIPTR)
, (T(77),FIMTR),      (T(78),FIMTRS),     (T(81),BLEA)
, (T(45),CPVT),       (T(41),YSTRP),      (T(52),CR)
, (T(140),SIND(1)),   (SIND(3),SINEA)
, (T(146),COSD(1)),   (COSD(3),COSEA)
, (T(122),TAND(1))
, (T(900),YPVT),      (T(901),PT(1)),     (T(1001),S(1))
EQUIVALENCE  ( DMTLP(1),CD(1905)),
  (DMTLP(2),DHU),      (DMTLP(5),EC),      (DMTLP(10),FTS)
, (DMTLP(11),RHO),     (DMTLP(12),FTU)
EQUIVALENCE           (PT( 91),PVTH),      (PT(10),PVTD)
, (PT(8),PVTV),       (T (100),SPAN)
,    (DIPVT,PT(5))
                 ,    (PT(38),DIH),        (PT(39),SINDIH)
,   (PT(40),COSDIH),  (PT(54),EOD),        (PT(55),DOT)
,   (PT(56),SOD),     (PT(66), OD),        (PT(69),EDIST)
,   (TOM,ND(57)),     (NEASE,ND(60)),    (NPAGE,ND(85))
,   (TOGM(1),D(80)), (DGM(1),D(102)),   (DPNZ,T(20))
,   (DNNZ,T(21)),     (BNPRT,D(147)), (ND(1),TCOM(6121))
,   (PDATE(1),D(2065))
EQUIVALENCE            (TCOM(6121),CD(1)),  (CD(1501),TSEC(1))
, (TSEC(1),ULTPM(1)),  (TSEC(12),ULTPV(1)), (TSEC(166),YSTRC(1))
EQUIVALENCE  (S(195), ANS(1))
EQUIVALENCE           (TCOM(2061),D(1))
,   (D(124),AC),      (D(125),FSLOC),     (D(126),RSLOC)
,   (D(127),EALOC),                       (D(195),FBR)
,   (D(198),DDPVT),   (D(199),DN),        (D(200),DYPVT)
,   (D(201), XPVT),   (D(202),THPTHD),    (D(203),THPAFT)
,   (D(240),WAREA),   (D(241),WAR),       (D(242),WSWP)
,   (D(243),WTOC),    (D(244),WTR),       (D(245),WSIG)
,   (D(192),CKA),    (D(193),CKB),        (D(194),CKC)
,   (D(156),DP1),     (D(157),DP2),      (D(189),PERFTU)
,   (D(186),DEPTH)
EQUIVALENCE   (D(1),D1), (D(2),D2), (D(3),D3), (D(4),D4)
, (D(5),D5), (D(6),D6), (D(7),D7), (D(8),D8), (D(9),D9)
, (D(10),D10), (D(11),D11), (D(12),D12), (D(15),P1)
```

CHART TITLE - INTRODUCTORY COMMENTS

```
*****************************************************************

      *****SUBROUTINE CSECW*****
   ***CENTER-SECTION WEIGHT EVALUATION***

*****************************************************************
```

CHART TITLE - SUBROUTINE CSECW

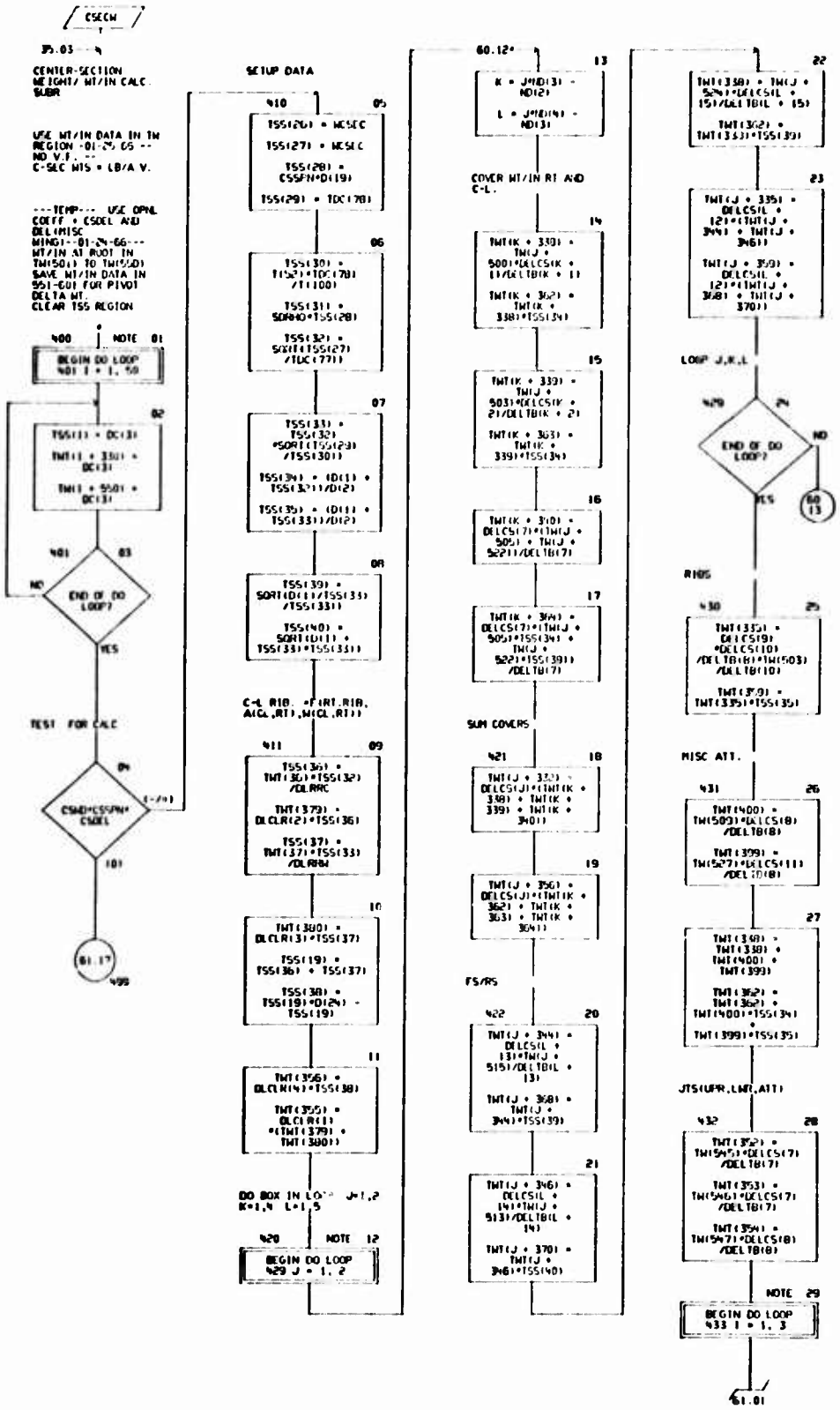

CHART TITLE - SUBROUTINE CSECH

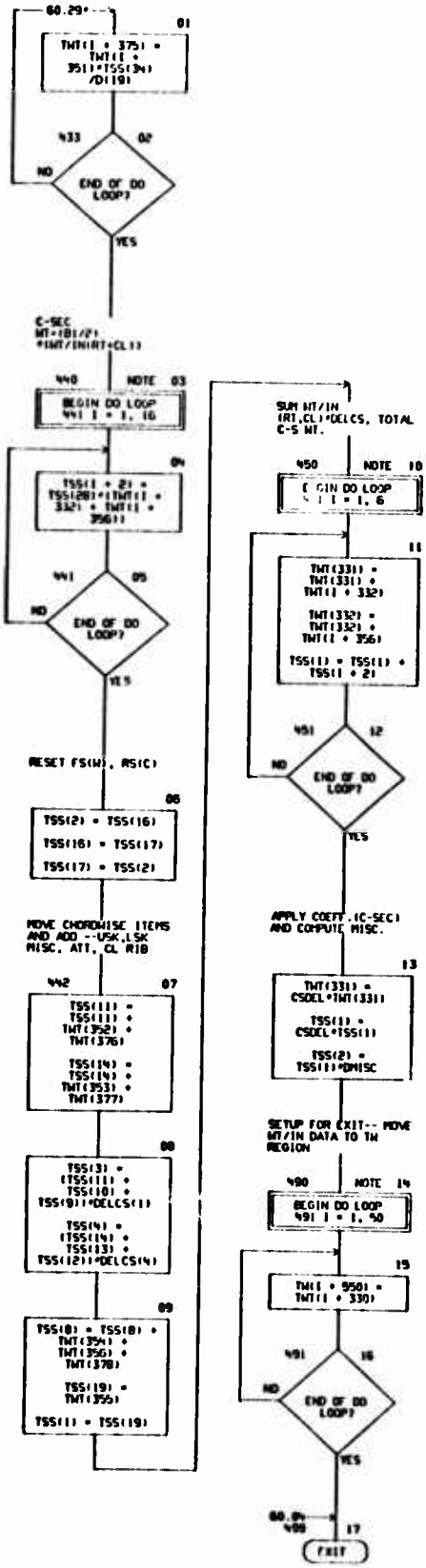

CHART TITLE - NON-PROCEDURAL STATEMENTS

```
COMMON TCOM(7120)
DIMENSION T(2000),D(2000),C(7000),ND(100),DC(100),
TDC(200),TSC(4201),TSS(100),TWT(4001),TSEC(3001),TW(900),
YSTRC(11),
DELCS(28),DCLR(4),
DELTB(30)
EQUIVALENCE (T(1),TCOM(1)),(D(1),TCOM(205)),(CD(1),TCOM(412)),
(ND(1),TCOM(612)),(TD(1),TCOM(7)),
(DC(1),D(401)),(TDC(1),T(1301)),(TSC(1),T(1501)),
(TSS(1),T(1901)),(TWT(1),CD(1101)),(TSEC(1),CD(1501)),
(YSTRC(1),TSEC(1061)),
(SDRHO,TWT(175)),(DMISC,T(19)),
(CSHD,D(401)),(CSSPN,D(426)),(DMSEC,T(5)),
(CSDEL,D(40)),(DELCS(1),D(402)),(DCLR(1),D(502)),
(DELTB(1),TWT(25)),(CS[illegible],C(TD(22)),(DCRGH,DELTB(23)),
(L,ND(28)),(K,ND(29)),(J,ND(30)),(I,ND(31))
```

CHART TITLE - INTRODUCTORY COMMENTS

```
*****************************************************************

      *****SUBROUTINE DEPT*****
   ***EVALUATION OF T-BOX STRUCTURE REPLACED BY PIN ****

*****************************************************************
```

CHART TITLE - SUBROUTINE DLPVT

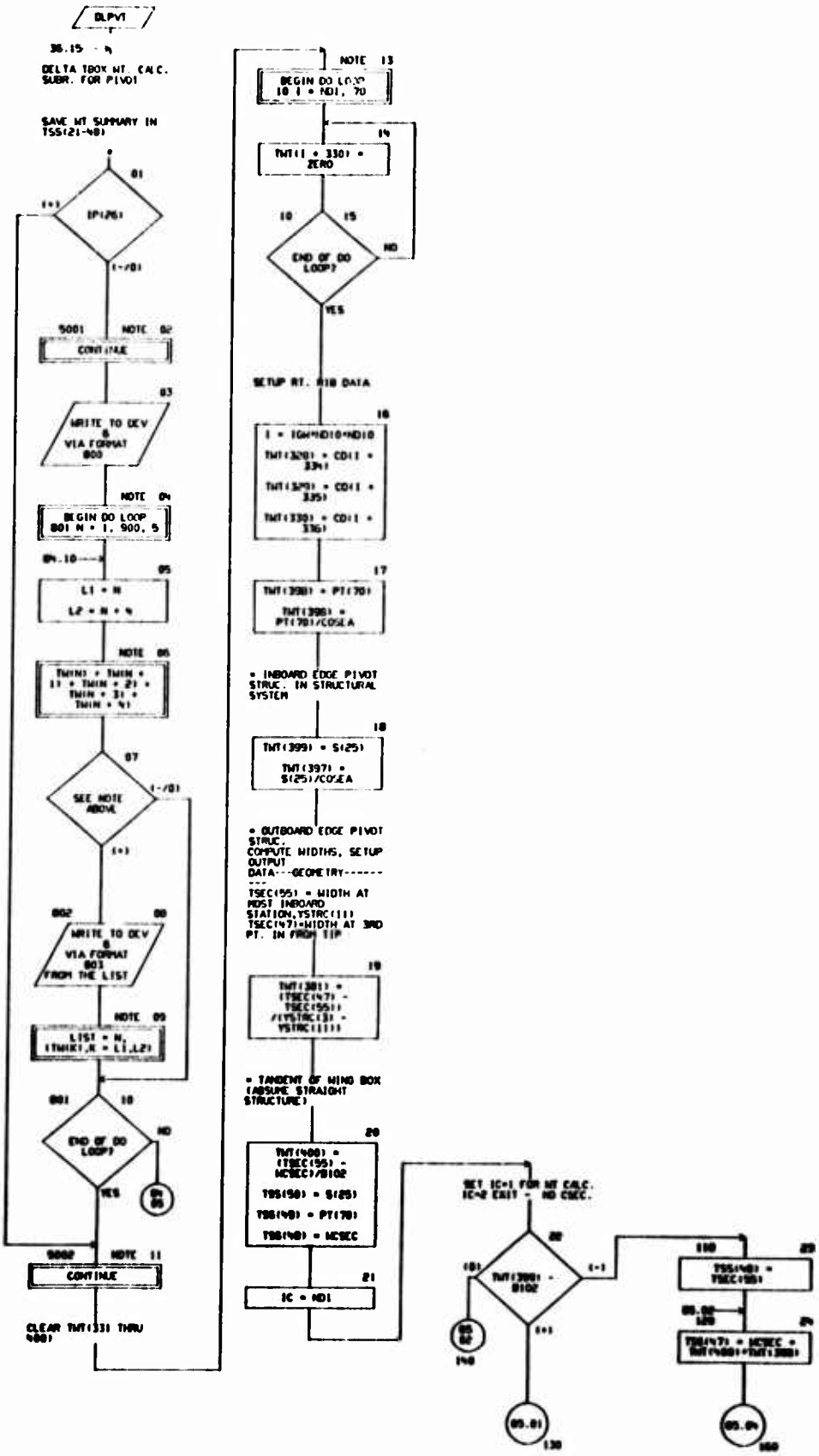

CHART TITLE - SUBROUTINE DLPVT

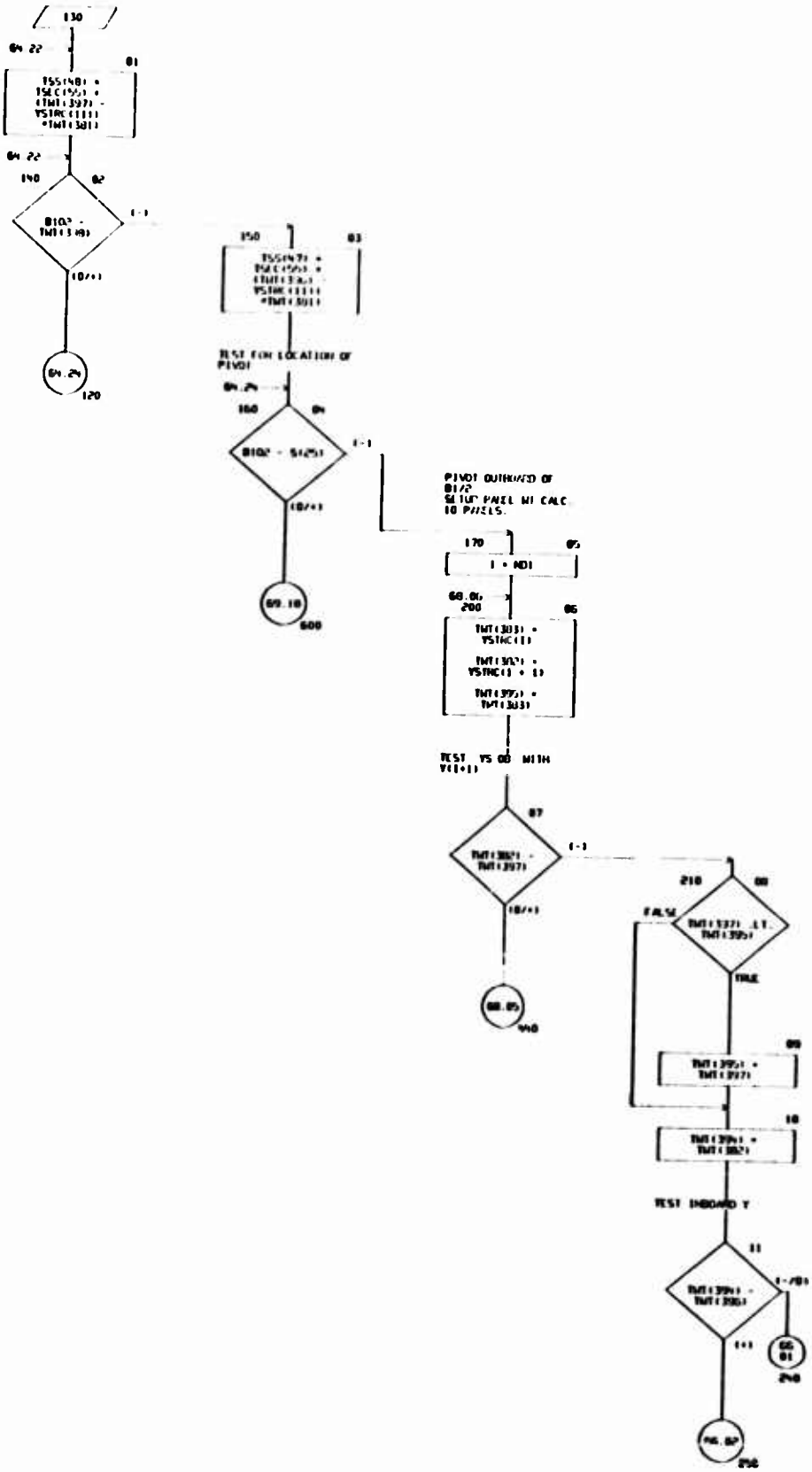

CHART TITLE - SUBROUTINE DLPVT

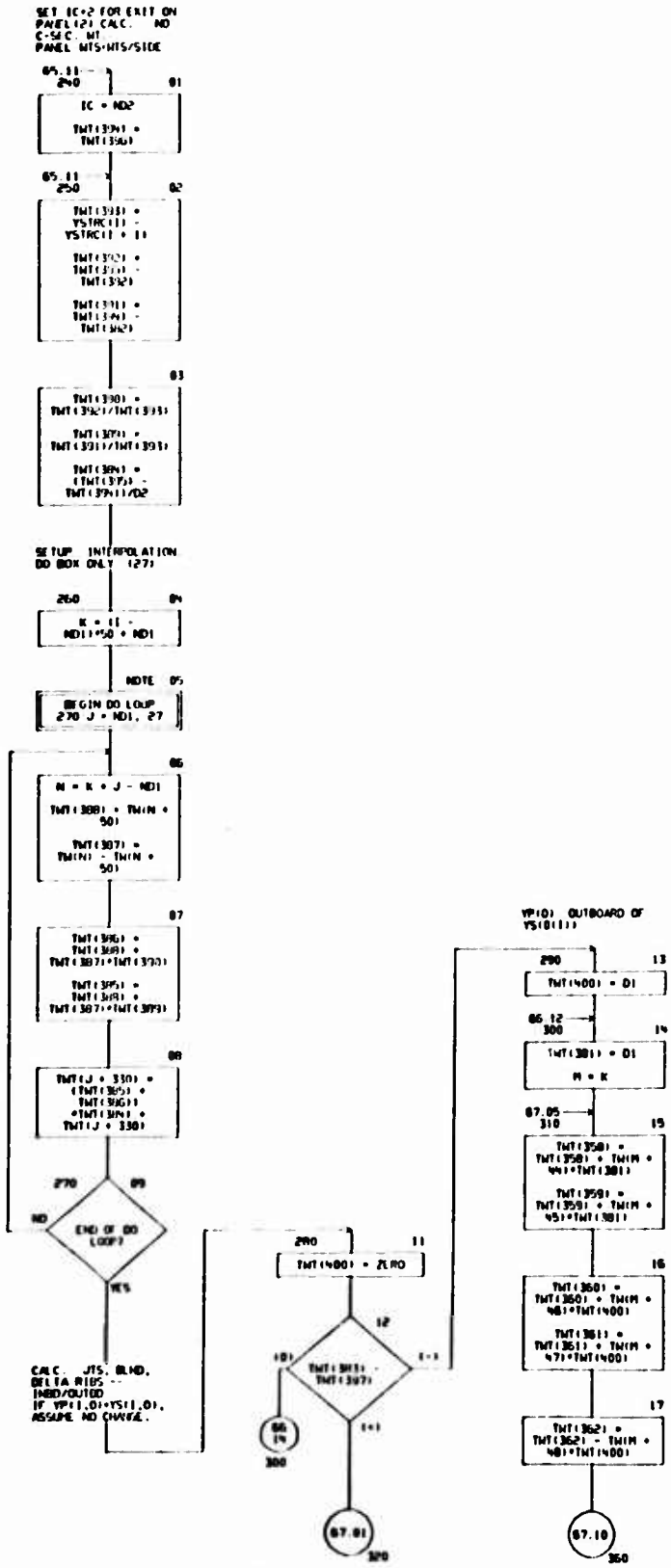

CHART TITLE - SUBROUTINE DLPV1

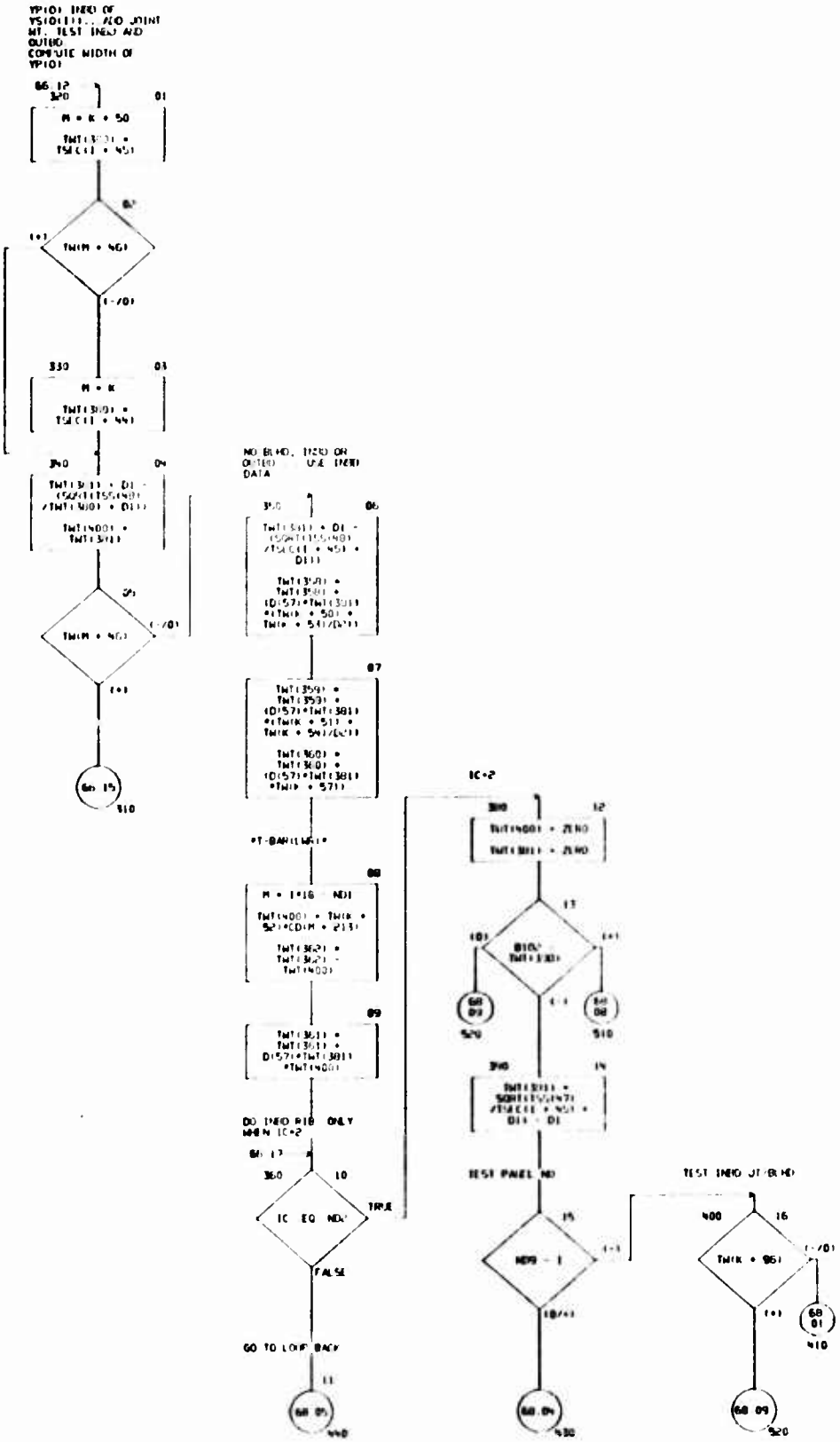

CHART TITLE - SUBROUTINE DLPVT

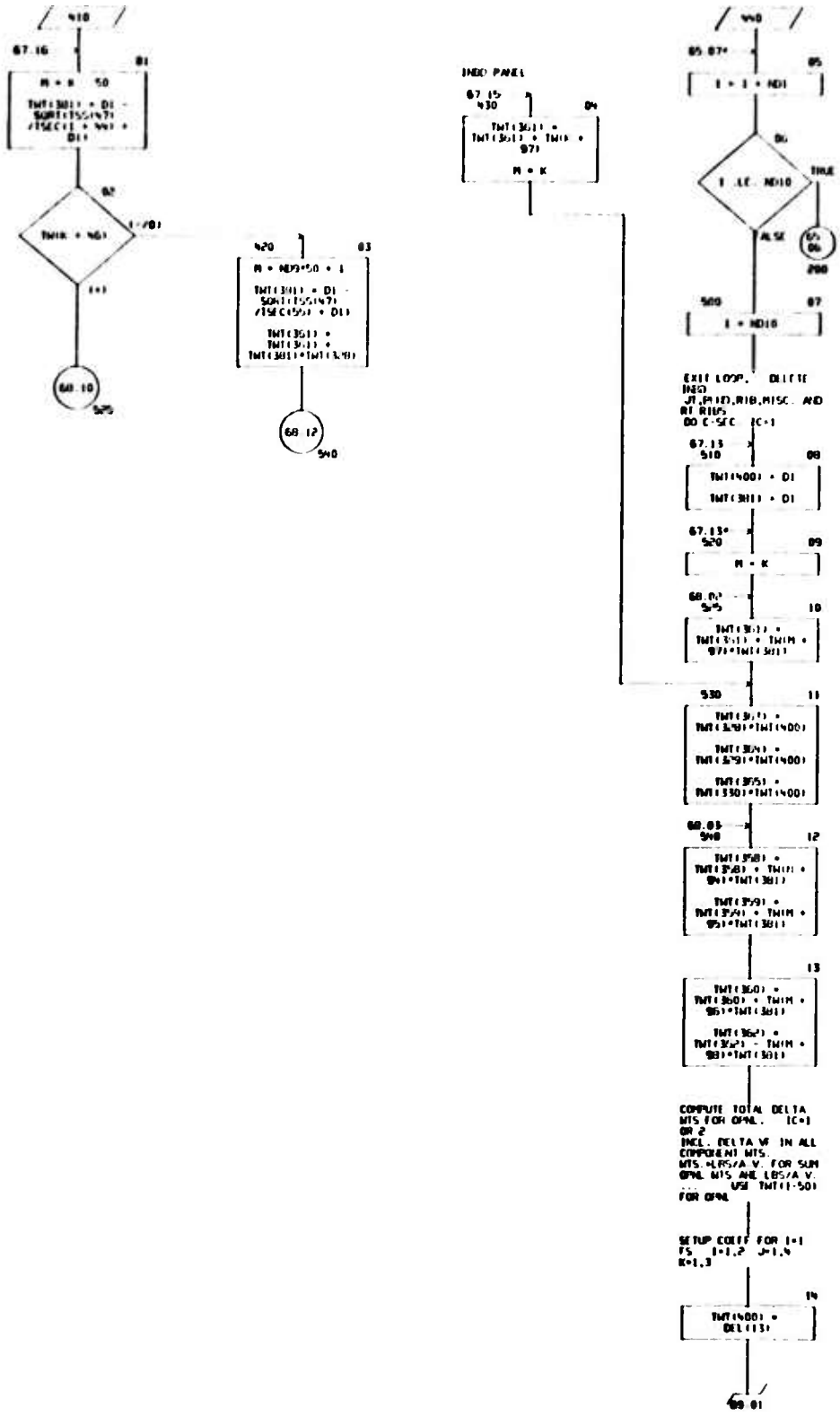

CHART TITLE - SUBROUTINE DLPVT

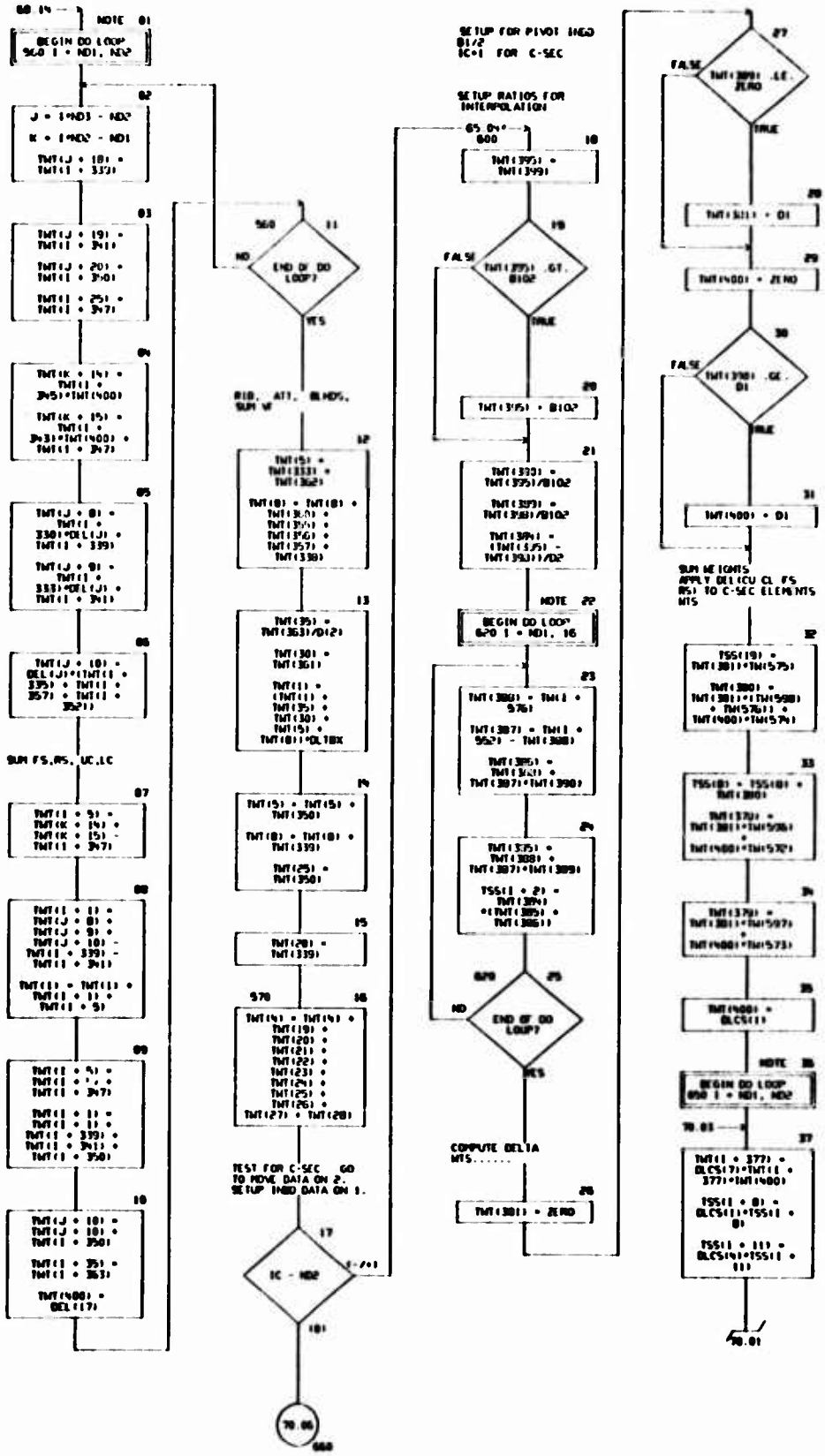

CHART TITLE - SUBROUTINE

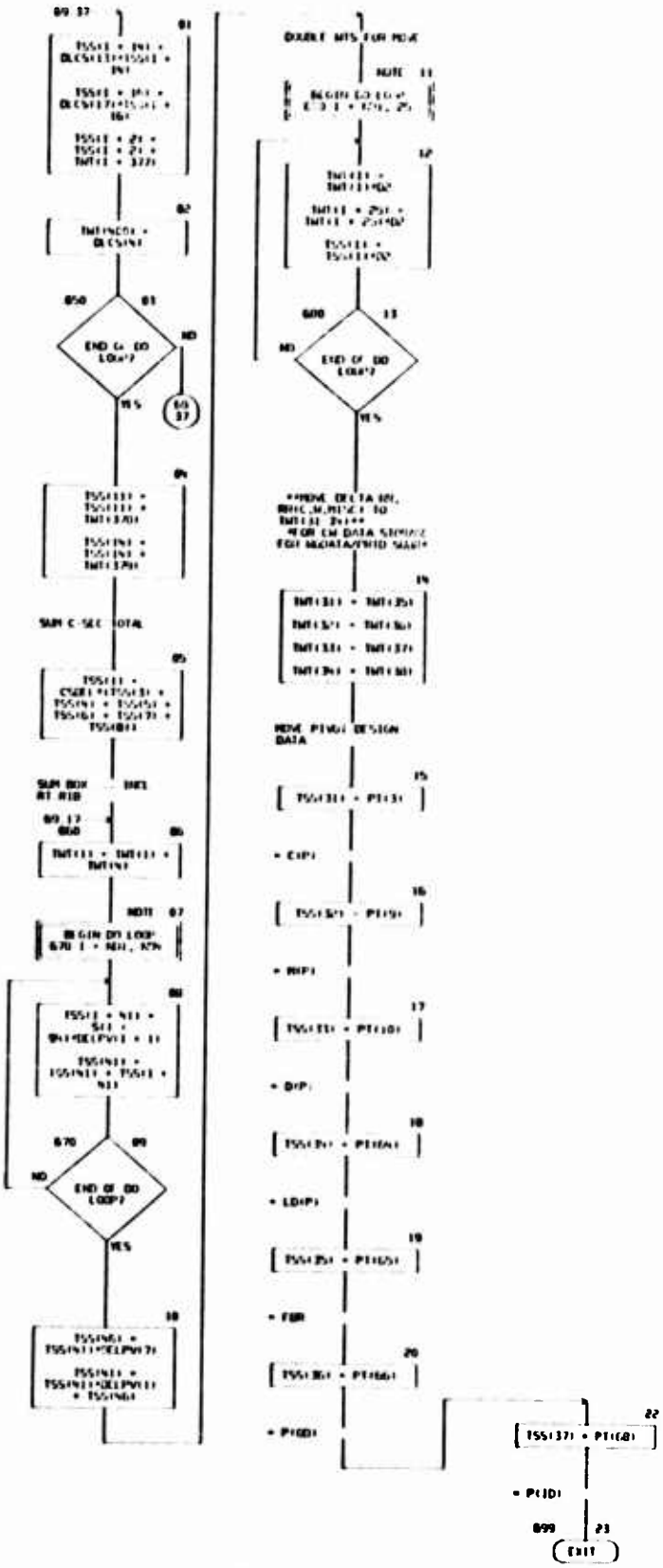

CHART TITLE - NON PROCEDURAL STATEMENTS

```
      COMMON TCOM(6220),TW(900)
      COMMON /IPRINT/ IP(80)
      DIMENSION   T(2000),   D(2000),   CD(2000),   ND(100)
      ,DC(100),   TDC(200),   TSC(420),   TSS(100),   TNT(400)
      ,TSEC(300),  PT(100),   S(200),   YSTRC(11),  DEL(30)
      ,DELPV(7),  DLCS(28)
      EQUIVALENCE          (TCOM(1),T(1)),          (TCOM(2061),D(1))
      ,(TCOM(4121),CD(1)),  (TCOM(6121),ND(1))
      EQUIVALENCE          (T(15), B10(2),          (T(16),B10(2))
      ,(T(70),COF(A),      (T(1001),S(1)),          (T(1341),TDC(1))
      ,(T(1541),TSC(1)),   (T(1551),TSS(1)),        (T(901),PT(1))
      EQUIVALENCE          (D(400),CS(2),           (D(481),CSDEC)
      ,(D(482),DLCS(1)),   (D(530),DELPV(1)),       (D(401),DC(1))
      ,(DC(3),ZERO),       (D(1),D1),               (D(2),D2)
      ,(MDSEC,T(5))
      EQUIVALENCE          (CD(11001),TDT(1)),      (DLTBX,T(1080))
      ,(TNT(2501),DEL(1)),  (CD(15001),TSEC(1)),    (TSEC(1651),YSTRC(1))
      EQUIVALENCE          (ND(1),ND1),             (ND(2),ND2)
      ,(ND(3),ND3),        (ND(4),ND4),             (ND(5),ND5)
      ,(ND(6),ND6),        (ND(7),ND7),             (ND(8),ND8)
      ,(ND(9),ND9),        (ND(10),ND10),           (ND(11),ND11)
      ,(ND(12),ND12),      (ND(28),M),              (ND(29),K)
      ,(ND(30),J),         (ND(31),N),              (ND(47),IC)
      ,(ND(55),ISEC),      (ND(56),NDDM),           (ND(57),ICH)
000   FORMAT(1H1,30X,16H*** TW ARRAY ***,93X,20H** DLPVT - IP(26) **//)
003   FORMAT(I6,5E18.8)
```

CHART TITLE - INTERRECTANGULARS

```
*****SUBROUTINE PRTA*****
***DESIGN DATA PRINT - TYPE A TORQUE-BOX SYNTHESIS SUMMARY***
```

CHART TITLE - SUBROUTINE PRTA

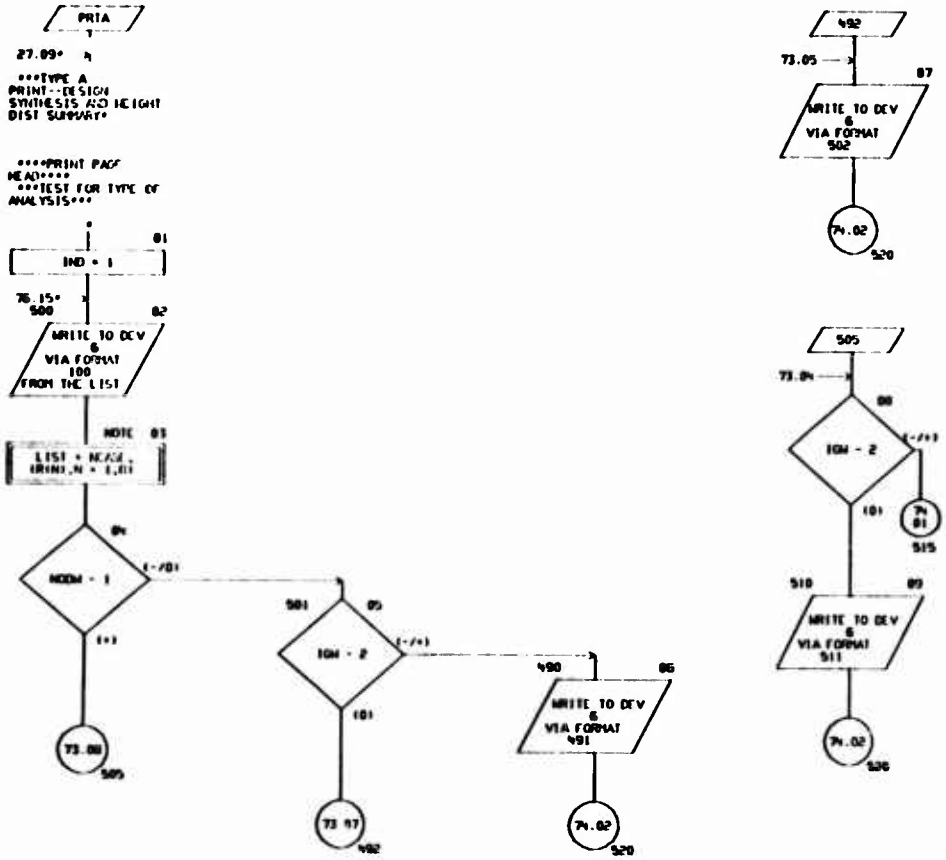

CHART TITLE - SUBROUTINE PRTA

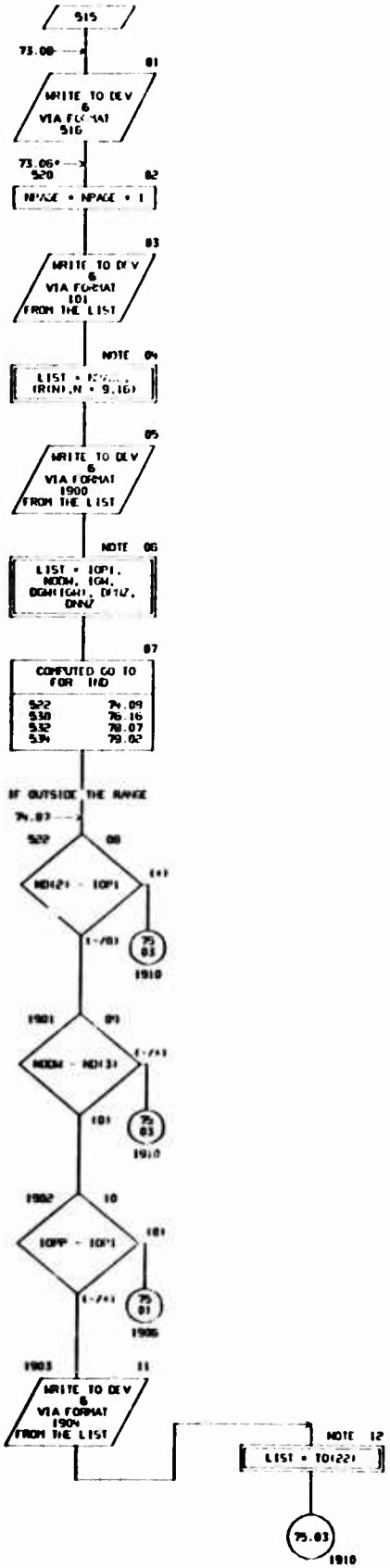

CHART TITLE - SUBROUTINE PRTA

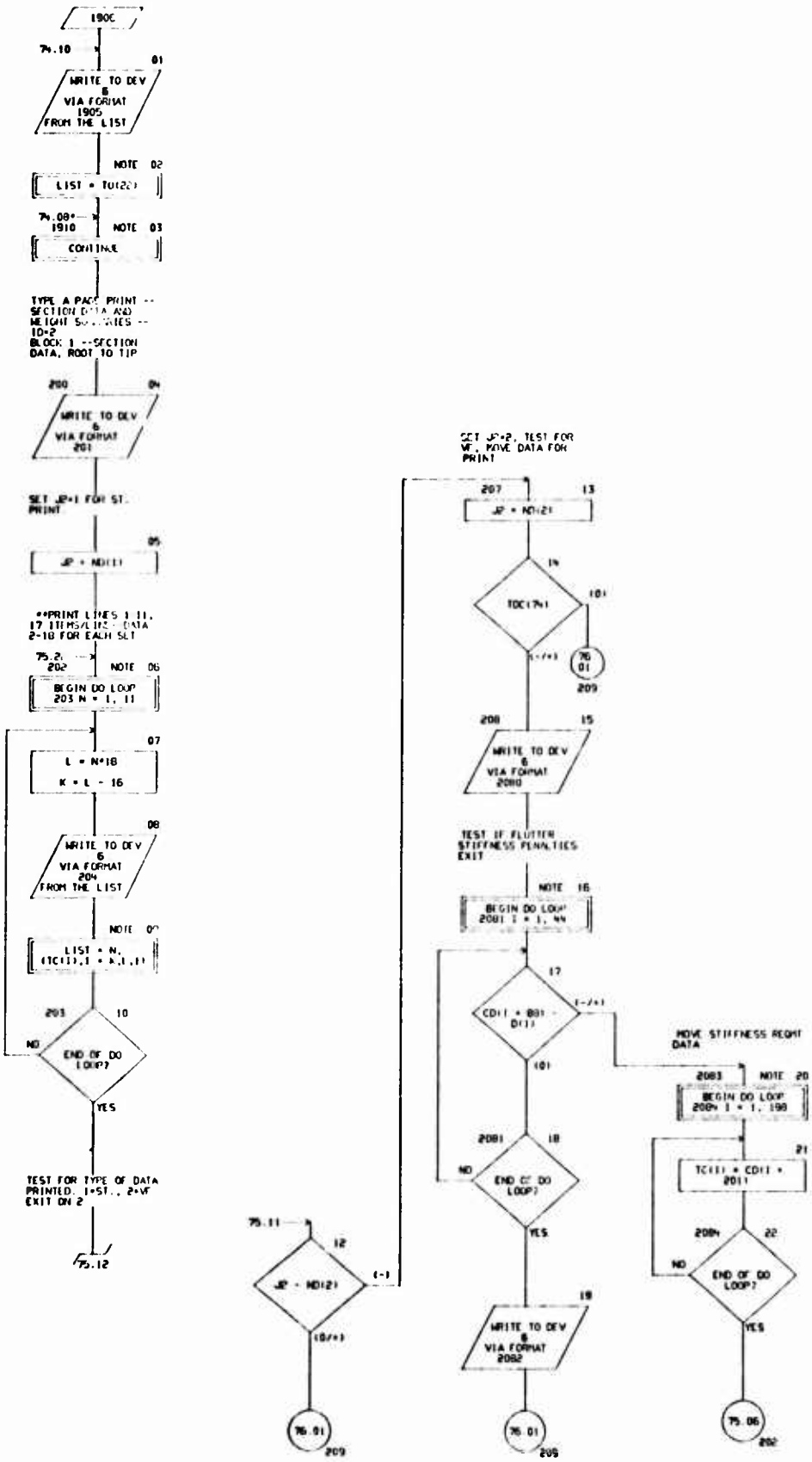

CHART TITLE - SUBROUTINE PRTA

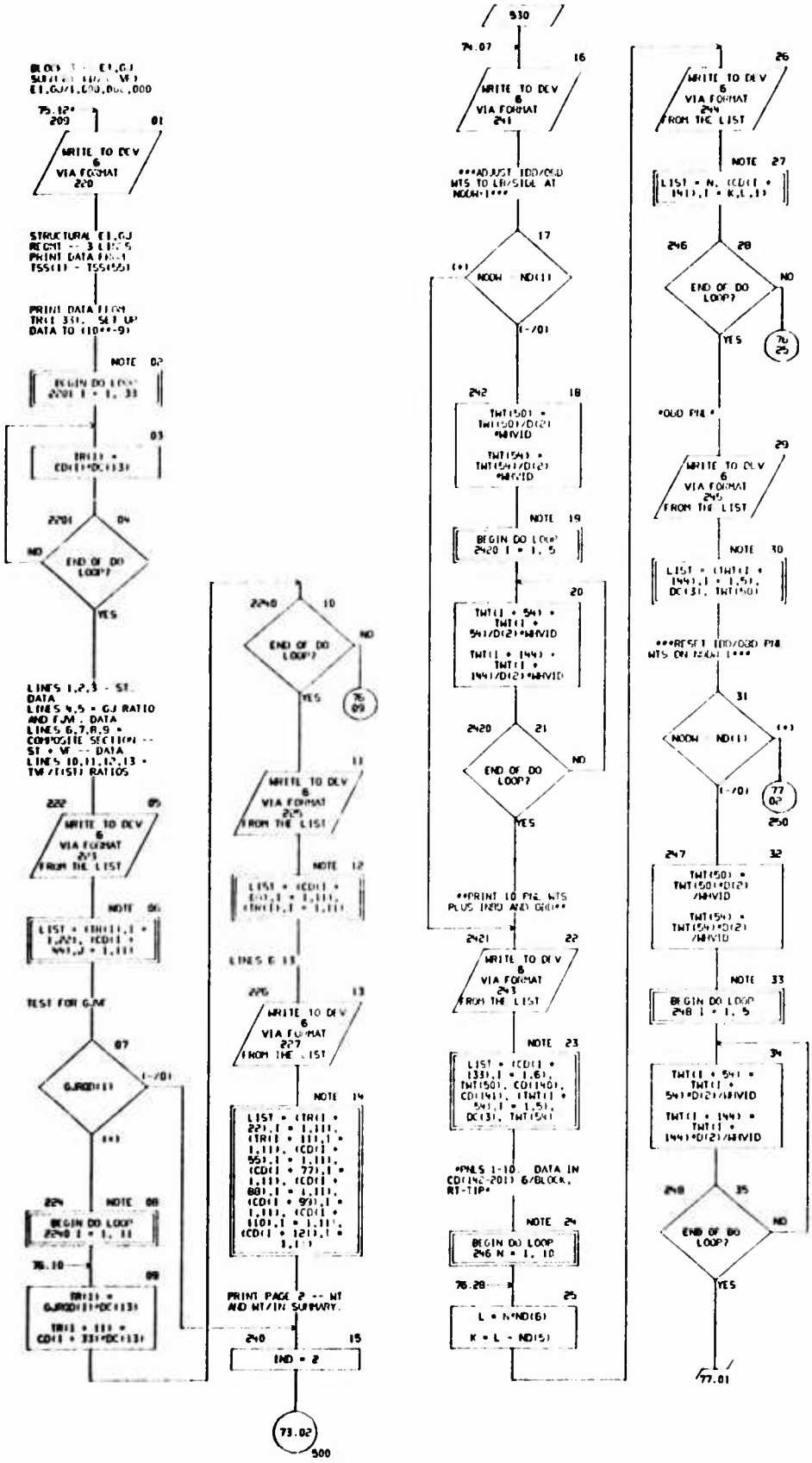

CHART TITLE - SUBROUTINE FRIA

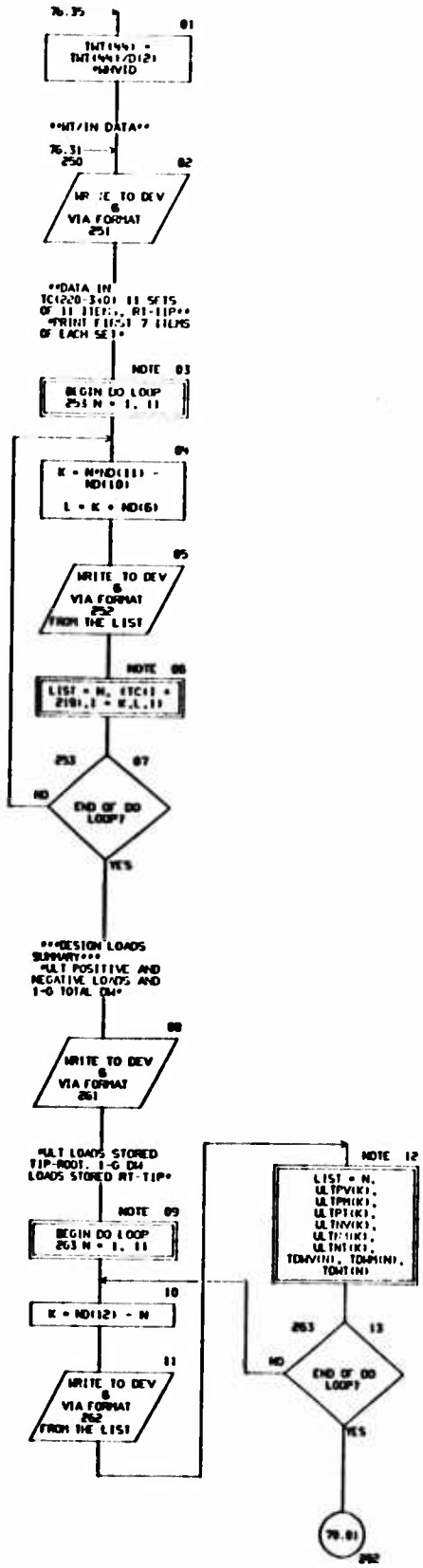

CHART TITLE - SUBROUTINE PRTA

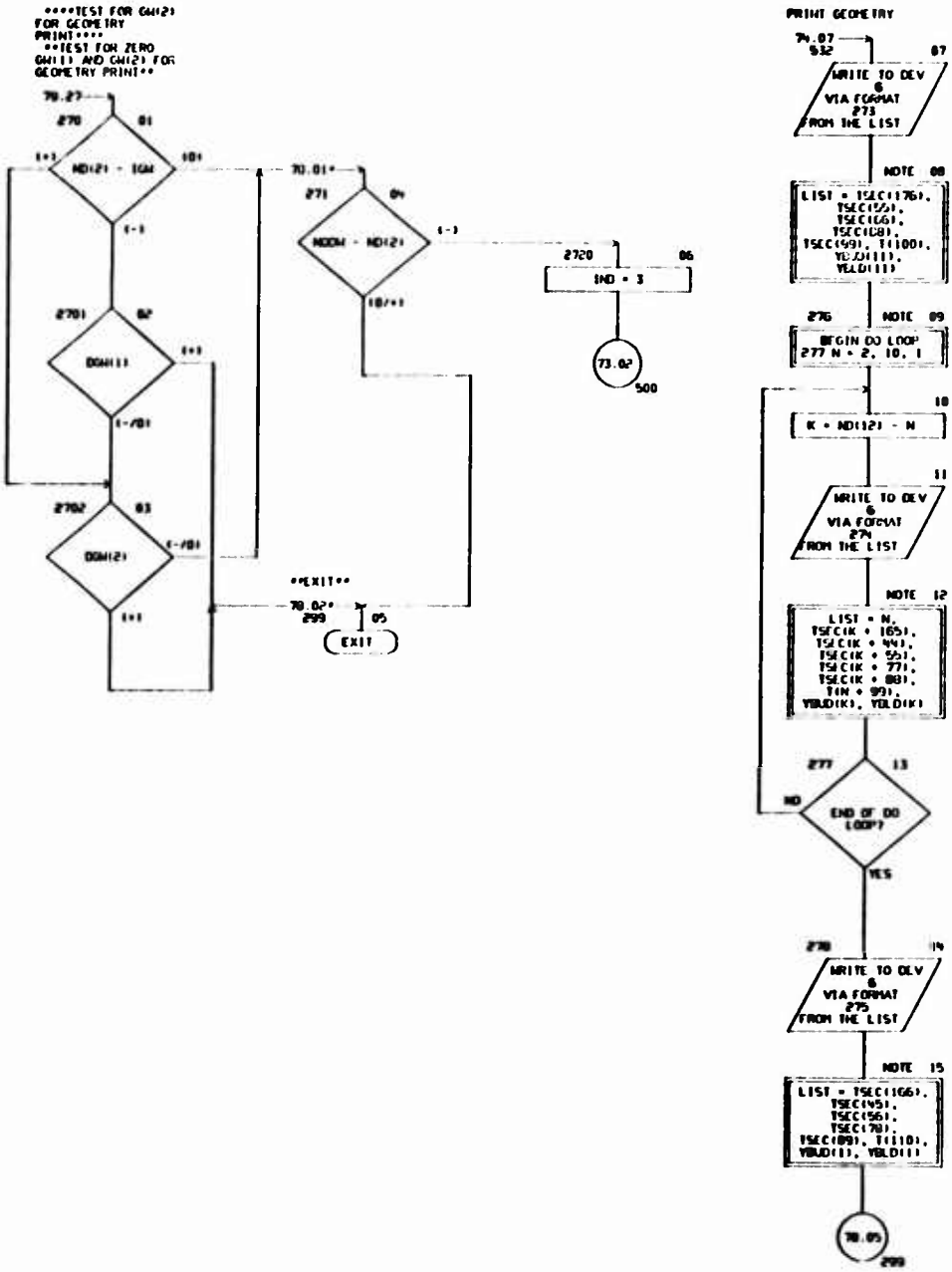

CHART TITLE - SUBROUTINE FRIA

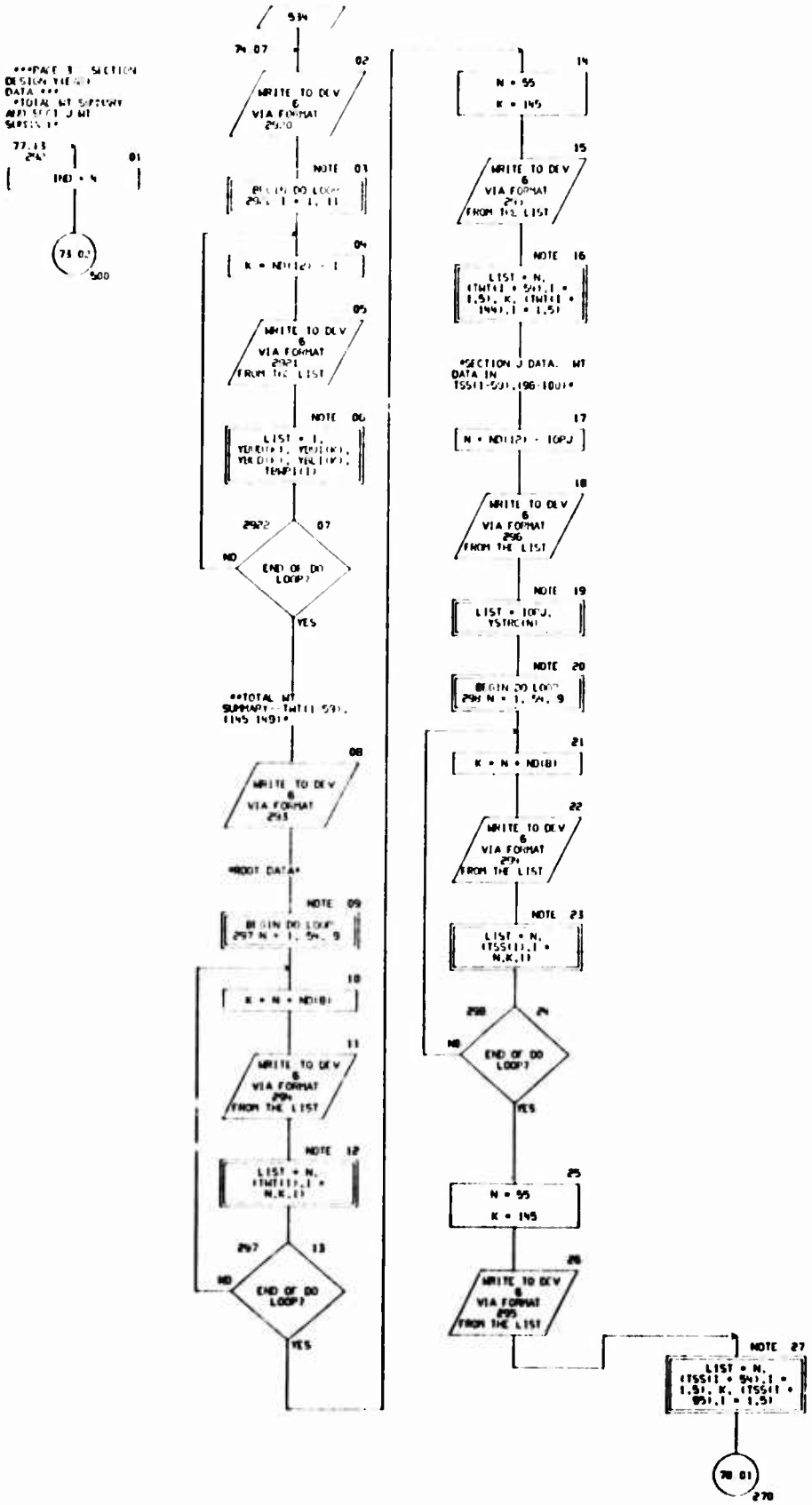

CHART TITLE - NON PROCEDURAL STATEMENTS

```
      COMMON T(2060),D(2060),CD(2000),ND(100)
      COMMON /MISC/ XMISC(100)
      DIMENSION DC(100),TDC(200),TSC(420),TSS(100),TWT(400),TSEC(300),
      TC(340),TO(40),TR(40),
      YSTRC(11),TB-P(11),GJRQD(11),
      TDGH(3),DGH(3),
      TDMV(11),TDMN(11),TDMT(11),
      ULTPV(11),ULTPM(11),ULTPT(11),
      ULTNV(11),ULTNM(11),ULTNT(11),
      YBU(11),YEL(11),YBUD(11),YELD(11),
      R(16)
      EQUIVALENCE (DC(1),D(140)),(TDC(1),T(134)),(TSC(1),T(154)),
      (TSS(1),T(196)),(TWT(1),CD(110)),(TSEC(1),CD(150)),
      (TC(1),T(960)),(TO(1),T(920)),(YSTRC(1),TSEC(166)),
      (TDGH(1),D(80)),(DGH(1),D(102)),(DFNZ,T(20)),(DNZ,T(21)),
      (TR(1),T(1300)),(R(1),XMISC(85)),
      (TDMV(1),CD(1550)),(TDMN(1),CD(1979)),(TDMT(1),CD(1940)),
      (ULTPV(1),TSEC(12)),(ULTPM(1),TSEC(1)),(ULTPT(1),TSEC(144)),
      (ULTNV(1),TSEC(111)),(ULTNM(1),TSEC(122)),(ULTNT(1),TSEC(155)),
      (YBU(1),TSEC(133)),(YEL(1),TSEC(189)),(TB-P(1),T(745)),
      (YBUD(1),T(679)),(YELD(1),T(690)),(GJRQD(1),T(650))
      EQUIVALENCE (NCASE,ND(5)),(NIOW,ND(56)),(IGW,ND(6)),
      (IOPI,ND(74)),(IOPJ,ND(80)),(IOPP,ND(81)),(IOPI,ND(82)),
      (I,ND(27)),(L,ND(29)),(K,ND(30)),(N,ND(31)),(J2,ND(28)),
      (NAMID,T(57)),
      (NPAGE,ND(85))
100   FORMAT(1H1,NHCASE,I4,1X,8A10,1X,13H** PRTA - IP()
491   FORMAT(1H+,103X,6H30) **)
502   FORMAT(1H+,103X,6H29) **)
511   FORMAT(1H+,103X,6H27) **)
516   FORMAT(1H+,103X,6H28) **)
101   FORMAT(5H PAGE,I4,1X,8A10)
1900  FORMAT (27X,                    5HIOPI=I1,8H NODW=I1,5H IOW=I
      1,8H  BDW=F9.1,6H  NZ=F6.3,2H/-F5.3)
1904  FORMAT (1H+,12X,4H PT=F4.1)
1905  FORMAT (1H+,12X,8H IPT PT=F4.1)
201   FORMAT (72H              -**-SECTION DATA - ST. REQMTS.   NX-KIP
      S, FC,FT-KSI-**- /110H  SECT  +NX   -NX   FCU   FCL   FTU   FT
      L   TSKU  TSKL  T-U   T-L   TSTR  LRIB  BSTR  NDS HSTR  TWFS  TWRS
      )
204   FORMAT (3X,I2,F7.2,F8.2,4F7.2,5F6.3,F8.2,F6.3,F5.1,F5.2,2F6.3)
2000  FORMAT (54H              -**-SECTION DATA - STIFF. REQMTS.-**- )
2002  FORMAT (54H0          -***-NO FLUTTER STIFFNESS PENALTIES ***-   ,
      /8H0    )
220   FORMAT (60H0             -**-SECTION EI,GJ SUMMARY (EI,GJ=(10)-9
      1-**-/110H    ITEM   SECT 1   SECT 2   SECT 3   SECT 4   SECT 5
       SECT 6   SECT 7   SECT 8   SECT 9  SECT 10  SECT 11 )
223   FORMAT (10H   GJ-ST.11F9.2,/10H   EI-ST.11F9.1,/10H GJ/EI-ST.11F
      9.4)
225   FORMAT (10H GJS/GJVF 11F9.4,/10H   GJ-VF 11F9.2)
227   FORMAT (10H  GJ-COMP.11F9.2,/10H  EI-COMP.11F9.2,/10H (GJ/EI)C.11F
      9.4,/10H GJC/GJVF 11F9.4,/10H TVF/TSKU 11F9.4,/10H TVF/TSKL 11F9.4
      ,/10H TVF/TWFS 11F9.4,/10H TVF/TWRS 11F9.4)
241   FORMAT (52H            -***-PANEL WEIGHT SUMMARY.  LBS/SIDE-**-/10
      4H  PANEL      SUM      T-BOX     L.E.     T.E.     MISC.  DEL
      TA VF      TIP       RT-RIB   C-SECT)
243   FORMAT (7H  TOTAL,F12.2,F11.2,2F10.2,F9.2,F10.2,F11.2,4X,2F10.2,/7
      H   BOD,F12.2,F11.2,2F10.2,F9.2,F10.2,15X,F10.2)
244   FORMAT (4X,I2,1X,F12.2,F11.2,2F10.2,F9.2,F10.2)
245   FORMAT (7H   OBD,F12.2,F11.2,2F10.2,F9.2,F10.2,F11.2)
251   FORMAT (4H0            -**-WEIGHT/INCH SUMMARY-**-/8H0  SECT.
       TOTAL     T-BOX     L.E.     T.E.     MISC.  DELTA VF  CONC.
      ITEMS  )
```

CHART TITLE - NON PROCEDURAL STATEMENTS

```
252     FORMAT (4X,I2,1X,F12.4,F11.4,F10.4,2F9.4,F10.4,F11.4)
261     FORMAT (42H                    -**-DESIGN LOADS SUMMARY-**- /110H  SECT.
          +VIULT)     +HIULT)     +TIULT)     -VIULT)     -HIULT)     -TIUL
        T)   VDH(1-G)   HDH(1-G)   TDH(1-G) )
262     FORMAT (4X,I2,F11.1,F13.1,F12.1,F11.1,2F12.1,F10.1,2F11.1)
273     FORMAT (40H0                   -**-SECTION GEO&THT SUMMARY-**-    /102H
         SECT.    YSTRC      WIDTH     DAVE      DFS       DRS      C-AERO
         Y-BU     Y-BL                        /8H    ROOT2F10.3,3F9.3,F10.3,2F
        9.4)
274     FORMAT (5X,I2,1X,2F10.3,3F9.3,F10.3,2F9.4)
275     FORMAT (8H      TIP2F10.3,3F9.3,F10.3,2F9.4,/)
2920    FORMAT                         (42H          -**-SECTION DESIGN Y BAR DA
        TA-**-,/40H0  STA  YDU(D)  YDU(A)  YBL(D)  YBL(A)  TB W/IN )
2921    FORMAT (1H 3X,I2,4F8.4,F9.4)
293     FORMAT (1H0,/48H                -**-ROOT SECTION WEIGHT SUMMARY-** /
        6H   TWT)
294     FORMAT (3X,I2,9F11.4)
295     FORMAT (2X,I3,5F11.4)
296     FORMAT (1H0,/40H                -**-SECTION (J) WEIGHT SUMMARY **- /2
        6H                 J-STA NO I3,5H,  Y-FB F2,/6H   TWT)
```

CHART TITLE - INTRODUCTORY COMMENTS

```
*****************************************************************

      *****SUBROUTINE PRTH*****
   ***DESIGN DATA PRINT - TYPE H C-SEC/PIVOT DESIGN SUMMARY***

*****************************************************************
```

CHART TITLE - SUBROUTINE PRTH

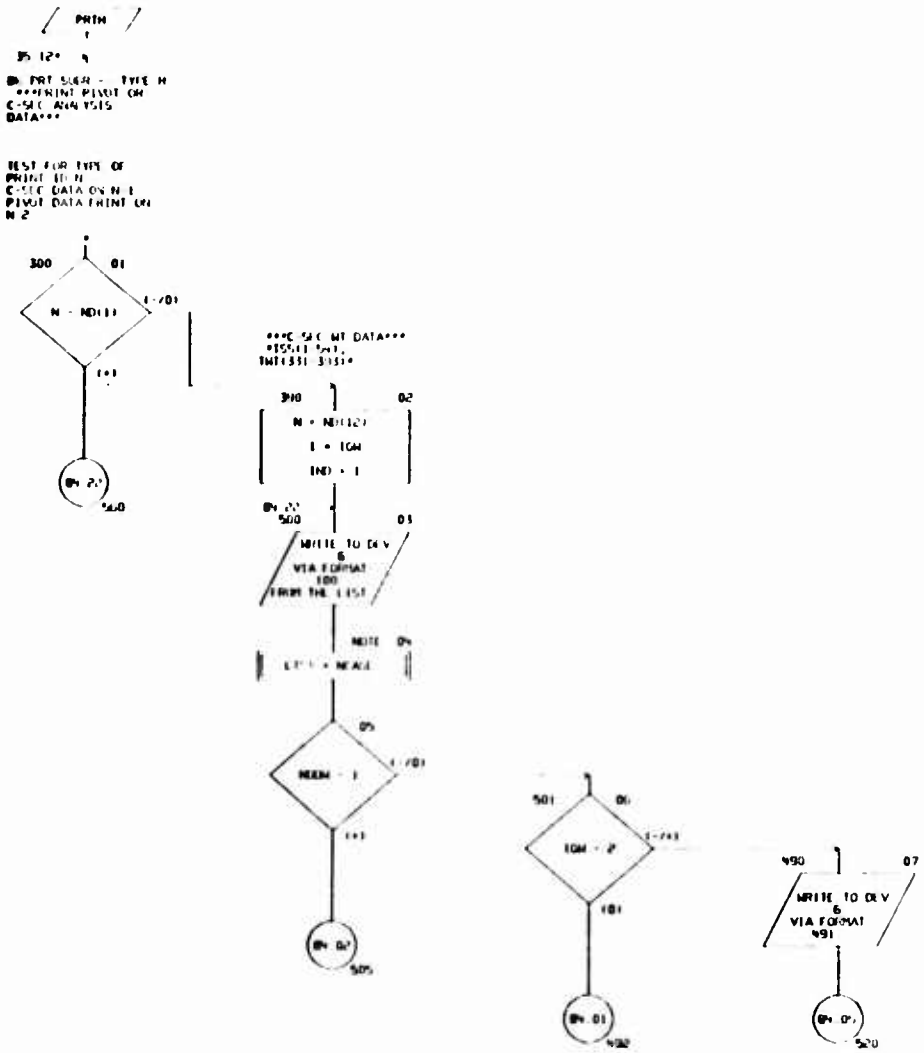

CHART TITLE - SUBROUTINE FNTH

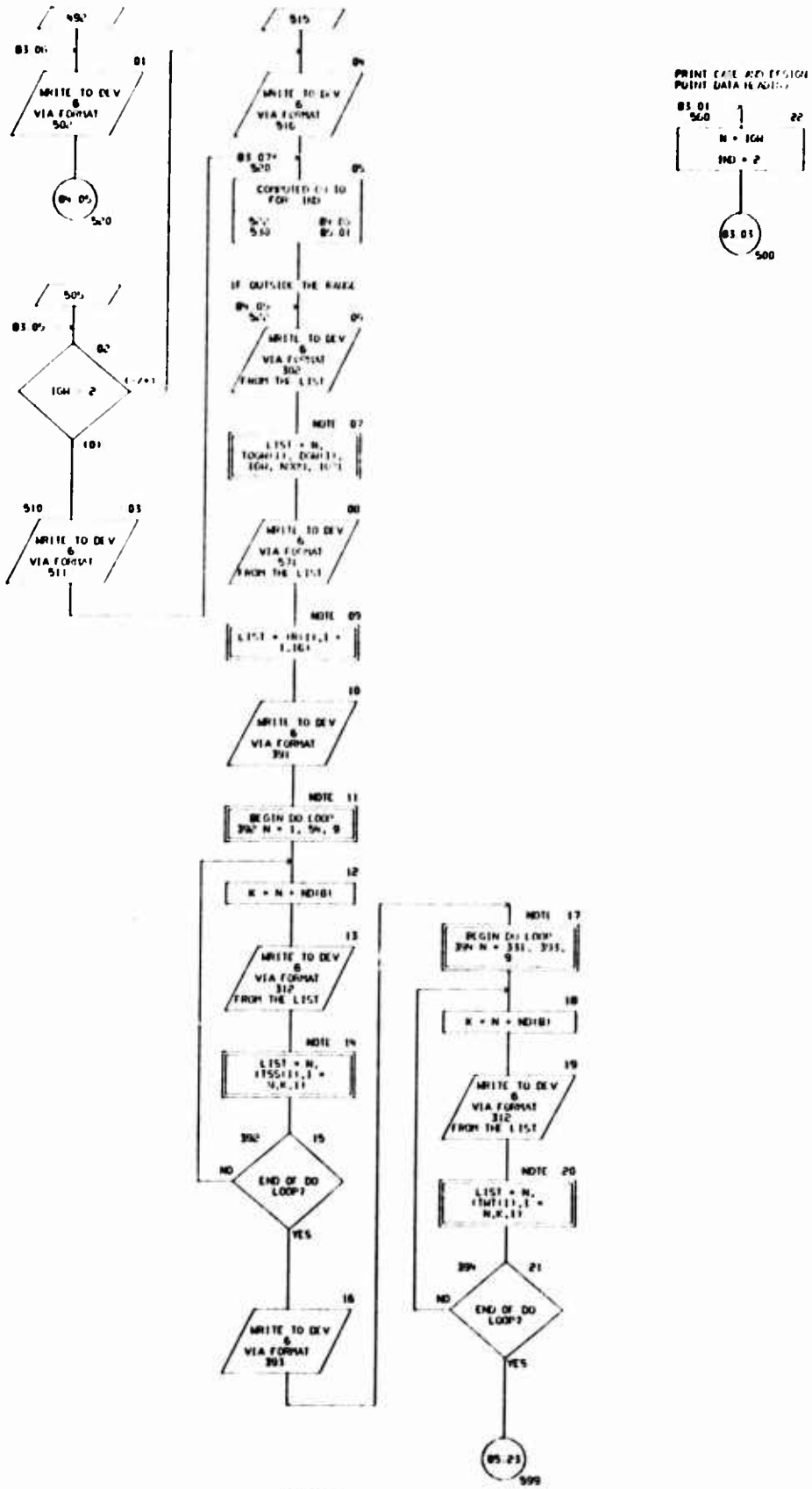

CHART TITLE - SUBROUTINE PRTH

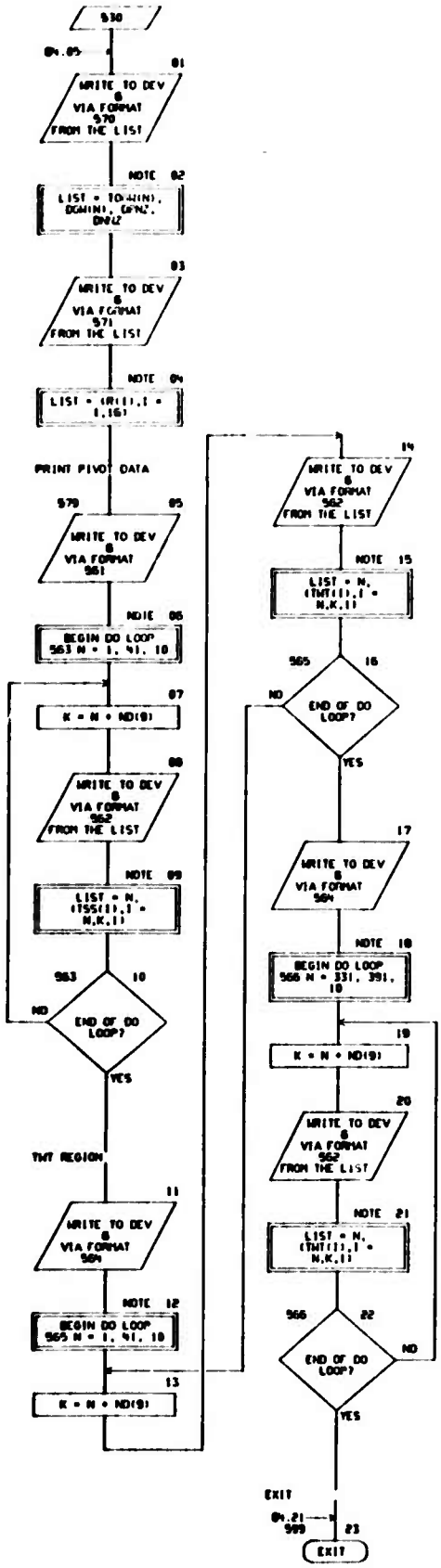

CHART TITLE - NON PROCEDURAL STATEMENTS

```
      COMMON T(2000),D(20[illegible]),CD(2[illegible]),RS(1000),[illegible]
      COMMON /MISC/ MMISC(100)
      DIMENSION TOC(200),TSC(920),TSS(1000),DC(100),
      TMT(900),TSEC(300),TOGM(3),[illegible],
      R(16)
      EQUIVALENCE (TOC(1),T(13[illegible]),(TSC(1),T(15[illegible]),(TSS(1),T(15[illegible]),
      (DC(1),D(190[illegible]),(TMT(1),CD(110[illegible]),(TSEC(1),CD(150[illegible]),
      (TOGM(1),D(800[illegible]),(DG(1),D(10[illegible]),(DPHZ,T(20[illegible]),(DZHZ,T(20[illegible]),
      (R(1),MMISC(50)),
      (IGM,ND(57[illegible]),(NXGM,ND(58[illegible]),(IGPI,ND(59[illegible]),
      (NCAGE,ND(60[illegible]),(NPYGE,ND(6[illegible]),(N,ND(3[illegible]))
100   FORMAT(1H1,9HCAGE,I4,[illegible],13H** FRTH - IP[illegible]
491   FORMAT(1H+,103X,E[illegible] **)
502   FORMAT(1H+,103X,F[illegible] **)
511   FORMAT(1H+,103X,E[illegible] **)
516   FORMAT(1H+,1[illegible],E[illegible] **)
391   FORMAT (5X10                 -*** CENTER SECTION DATA -  LB/AV *** ,
      /X10  TSS      -** DETAIL WEIGHT DATA **  )
302   FORMAT (12X,        8H  PANEL  I2,13H DATA   10GM FB.1,6H  DCM FB.
      1,6H  IGM I1,7H  NXGM I1,7H  IGPI I1,9H  T FB 5)
312   FORMAT (3X,I3,9F11.5)
393   FORMAT (6H0  TMT)
570   FORMAT (21X,                    12H       TOGM FB 1,6H  DG FB 1,8
      H   HND FG 3,6H  HZ FG 3)
571   FORMAT (1H0,9X,8A10,/10X,8A10)
561   FORMAT (42H          PIVOT AND DELTA I.B. MT  SUMMARY/LBS  TSS)
562   FORMAT (3X,I3,10F10.3)
564   FORMAT (6H0  TMT)
```

OVERLAY (10,0)

TORQUE-BOX STRUCTURAL SYNTHESIS/WEIGHT ANALYSIS
FOR METALLIC DESIGNS - NO. 2

Preceding page blank

PROGRAM TABLE OF CONTENTS AND REFERENCES,
AND TABLE OF DIAGNOSTICS

CARD ID PAGE/BOX NAME REFERENCES (SOURCE SEQUENCE NO. AND PAGE/BOX)

FORTRAN MODULE WING AND EMPENNAGE MODULE -

CHART TITLE - INTRODUCTORY COMMENTS

CHART TITLE - PROCEDURES

(000021) 2.04 10 (000019) 2.03 (000019) 2.03
(000029) 2.08 20 (000027) 2.07 (000027) 2.07

CHART TITLE - NON-PROCEDURAL STATEMENTS

CHART TITLE - INTRODUCTORY COMMENTS

CHART TITLE - SUBROUTINE CNSTR

(000116) 5.01 103 (000105) 5.04
(000040) 5.02 CNSTR (000021) 2.04-X
(000100) 5.02 2000
(000104) 5.03 1000
(000105) 5.04 100
(000108) 5.05 101 (000105) 5.04
(000111) 5.06 102 (000108) 5.05
(000120) 6.01 104 (000108) 5.05
(000124) 6.03 (000126) 6.04
(000126) 6.04 105
(000132) 6.08 (000134) 6.09
(000134) 6.09 106
(000138) 6.11 107
(000139) 6.12 (000140) 6.13
(000140) 6.13 1070
(000142) 7.01 108 (000137) 6.10
(000143) 7.02 (000144) 7.03
(000144) 7.03 1080
(000163) 7.04 700 (000117) 5.01 (000104) 5.03 (000105) 5.04 (000113) 5.06 (000141) 6.13
(000164) 7.05 (000165) 7.06
(000165) 7.06 701
(000174) 7.08 (000432) 11.20
(000176) 7.10 710
(000177) 7.11 711
(000186) 7.13 712 (000175) 7.09 (000176) 7.10
(000197) 7.16 720 (000192) 7.15
(000199) 7.18 721
(000201) 7.19 722 (000198) 7.17
(000202) 7.20 723
(000203) 7.21 724 (000201) 7.19
(000204) 7.22 725
(000205) 7.23 726 (000203) 7.21
(000206) 7.24 727
(000207) 7.25 728 (000205) 7.23
(000208) 8.01 729
(000209) 8.02 730 (000207) 7.25
(000210) 8.03 731
(000211) 8.04 732 (000209) 8.02
(000212) 8.05 733
(000214) 8.06 734 (000211) 8.04
(000215) 8.07 735
(000217) 8.08 736 (000214) 8.06
(000218) 8.09 737
(000219) 8.10 738 (000217) 8.08
(000220) 8.11 739
(000221) 8.12 740 (000219) 8.10
(000222) 8.13 741
(000225) 8.14 742 (000192) 7.15 (000221) 8.12
(000261) 8.27 743
(000262) 8.28 744 (000260) 8.26
(000276) 8.31 660 (000273) 8.30
(000277) 8.32 661
(000278) 8.33 662 (000276) 8.31
(000285) 9.01 670 (000273) 8.30
(000291) 9.04 671

CARD ID	PAGE/BOX	NAME	REFERENCES (SOURCE SEQUENCE ID. AND PAGE/BOX)							
(0000292)	9.05	672	(0000290)	9.03						
(0000293)	9.06	673								
(0000295)	9.08	674	(0000292)	9.05						
(0000296)	9.09	675	(0000270)	8.33	(0000294)	9.07				
(0000298)	9.11	676	(0000270)	8.33						
(0000302)	9.12	678	(0000297)	9.10						
(0000311)	9.16	679								
(0000312)	9.17	680	(0000310)	9.15						
(0000323)	9.20	681								
(0000330)	9.22	682	(0000183)	7.12						
(0000334)	9.23	683								
(0000353)	9.24	700	(0000334)	9.23	(0000343)	10.02	(0000349)	10.05	(0000349)	10.06	(0000350)	10.07
(0000339)	10.01	684	(0000334)	9.23						
(0000344)	10.03	685								
(0000345)	10.04	686								
(0000348)	10.05	687								
(0000349)	10.06	688								
(0000350)	10.07	689								
(0000356)	10.08	787								
(0000357)	10.09	7870	(0000353)	9.24						
(0000358)	10.10	7871	(0000356)	10.09						
(0000361)	10.11	790	(0000353)	9.24	(0000349)	10.06	(0000350)	10.07	(0000357)	10.09
(0000370)	10.13	7900								
(0000372)	10.15		(0000374)	10.16						
(0000374)	10.16	7901								
(0000377)	10.17	7902	(0000378)	10.12						
(0000379)	10.19		(0000381)	10.20						
(0000381)	10.20	7903								
(0000389)	10.22	7910								
(0000390)	10.23	7911								
(0000391)	10.24		(0000392)	10.25						
(0000392)	10.25	7915								
(0000401)	11.01	7912	(0000401)	12.10						
(0000402)	11.02		(0000403)	11.03						
(0000403)	11.03	7916								
(0000405)	11.05		(0000406)	11.06						
(0000406)	11.06	7917								
(0000408)	11.08		(0000409)	11.09						
(0000409)	11.09	7918								
(0000413)	11.11		(0000414)	11.12						
(0000414)	11.12	7919								
(0000420)	11.13	795	(0000389)	10.22						
(0000422)	11.15	7991								
(0000423)	11.16	7992								
(0000424)	11.17	7993								
(0000427)	11.18	7994	(0000421)	11.14	(0000422)	11.15	(0000423)	11.16	(0000424)	11.17
(0000429)	11.19	7995	(0000427)	11.18						
(0000432)	11.20	799	(0000424)	11.17	(0000427)	11.18				
(0000435)	11.21	8900								
(0000438)	11.23		(0000440)	11.24						
(0000440)	11.24	8901								
(0000453)	12.01	796	(0000396)	10.26						
(0000485)	12.11	810	(0000481)	12.10						
(0000486)	12.12		(0000487)	12.13						
(0000487)	12.13	8100								
(0000491)	12.15	811								
(0000496)	42.16	812	(0000491)	12.15						
(0000511)	13.01	813	(0000501)	12.17						
(0000515)	13.03		(0000517)	13.04						
(0000517)	13.04	8130								
(0000526)	13.08		(0000538)	13.11						
(0000538)	13.11	8131								
(0000555)	13.22	899	(0000490)	12.14	(0000491)	12.15	(0000501)	12.17		

CHART TITLE - NON-PROCEDURAL STATEMENTS

CHART TITLE - INTRODUCTORY COMMENTS

CHART TITLE - SUBROUTINE SECTD

(0000566)	16.01	SECTD	(0000323)	9.20 X	(0000344)	10.03-X

CARD ID	PAGE/DEV	NAME	REFERENCES (SOURCE STATEMENT NO. AND PAGE/LOC)							
(0000602)	16.01	7000								
(0000615)	16.04	703	(0000610)	16.03						
(0000620)	16.06	7051								
(0000623)	16.07	7052	(0000619)	16.05						
(0000630)	16.08	9100								
(0000632)	16.09	9101	(0000630)	16.08						
(0000635)	16.11	9102								
(0000636)	16.12	9103								
(0000651)	16.13	705	(0000654)	16.10	(0000552)	17.03				
(0000657)	16.14	7100	(0000655)	16.11	(0000637)	16.12	(0000555)	17.09	(0000701)	18.03
(0000639)	17.01	9310	(0000639)	16.09						
(0000640)	17.02	9311								
(0000641)	17.03	9312								
(0000643)	17.04	702	(0000639)	17.01						
(0000644)	17.05	703	(0000640)	17.02						
(0000645)	17.05	7020	(0000641)	17.03	(0000643)	17.04				
(0000649)	17.07	7021	(0000643)	17.04	(0000644)	17.05	(0000677)	18.04		
(0000652)	17.08	7023								
(0000555)	17.09	7022	(0000651)	16.13	(0000652)	17.08	(0000667)	18.02		
(0000664)	18.01	7053	(0000651)	16.13						
(0000670)	18.03	7055	(0000677)	18.02						
(0000677)	18.04	7031	(0000674)	17.05						
(0000683)	18.05	704	(0000641)	17.03	(0000677)	18.04				
(0000684)	18.06	7032	(0000683)	18.05						
(0000689)	18.07	7040	(0000683)	18.05						
(0000692)	18.09	7041								
(0000693)	18.10	706	(0000694)	16.10	(0000701)	18.03	(0000555)	18.09	(0000691)	18.08
(0000696)	18.11	7061	(0000683)	16.14	(0000555)	17.09	(0000670)	18.03		
(0000710)	19.01	7063								
(0000715)	19.04	7064								
(0000718)	19.05	7065	(0000709)	18.15	(0000714)	19.03				
(0000722)	19.07	7066								
(0000726)	19.08	7067	(0000709)	18.15	(0000721)	19.06				
(0000730)	19.09	7062								
(0000734)	19.11	7070								
(0000738)	19.13	707	(0000730)	19.20						
(0000739)	19.14		(0000740)	19.15						
(0000740)	19.15	708								
(0000744)	19.17	7090								
(0000749)	19.19	709	(0000746)	19.18						
(0000751)	19.21	710								
(0000754)	19.22	711	(0000751)	19.21						
(0000755)	19.23		(0000756)	19.24						
(0000756)	19.24	713								
(0000760)	19.25	712	(0000743)	19.16	(0000746)	19.18	(0000750)	19.20	(0000751)	19.21
(0000761)	19.26		(0000762)	19.27						
(0000762)	19.27	714								
(0000770)	19.31	7120								
(0000773)	20.01	760	(0000769)	19.30						
(0000776)	20.03	7601								
(0000777)	20.04	7602								
(0000779)	20.06	7603	(0000776)	20.03						
(0000780)	20.07	7604	(0000775)	20.02	(0000770)	20.05				
(0000801)	20.11	7608								
(0000819)	20.12	7610	(0000801)	20.11						
(0000804)	20.15	761	(0000801)	20.11						
(0000826)	21.01	763	(0000823)	20.14						
(0000827)	21.02	7630								
(0000831)	21.03	704	(0000823)	20.14	(0000826)	21.01				
(0000836)	21.06	7640								
(0000839)	21.07	7641	(0000835)	21.05						
(0000846)	21.10	7642								
(0000847)	21.11	7643	(0000807)	22.12						
(0000852)	21.12	7644	(0000845)	21.09						
(0000856)	21.15	7657								
(0000857)	21.16	7658	(0000855)	21.14						
(0000805)	21.18	765	(0000862)	21.17						
(0000874)	22.01	7650	(0000922)	23.01						
(0000877)	22.02	7651	(0000872)	21.19						
(0000883)	22.03	7645	(0000862)	21.17						
(0000885)	22.04	7646	(0000883)	22.03						
(0000890)	22.05	7647	(0000886)	22.04						

CARD ID	PAGE/BOX	NAME	REFERENCES (SOURCE SEQUENCE NO. AND PAGE/BOX)					
(0009006)	22.12	7659						
(0009010)	22.13	7648	(0000803)	22.03	(0009005)	22.11		
(0009016)	22.14	7649	(0000806)	22.04				
(0009018)	22.16	7660						
(0009021)	23.01	7661	(0009017)	22.15				
(0009028)	23.02	7121	(0000823)	20.14				
(0009031)	23.04	7122						
(0009032)	23.05	7123	(0009030)	23.03				
(0009042)	23.09	740						
(0009044)	23.10	741	(0009041)	23.08				
(0009048)	23.12	742						
(0009047)	23.13	743	(0009045)	23.11				
(0009052)	23.16	744						
(0009057)	23.17	745	(0009051)	23.15				
(0009064)	23.20	746						
(0009068)	23.21	747	(0009063)	23.19				
(0009072)	23.22	7470						
(0009074)	23.24	7471						
(0009075)	23.25	7472	(0009073)	23.23				
(0009081)	23.28	762	(0000813)	20.17	(0009019)	22.16		
(0009091)	24.02	750	(0000870)	22.02				
(0009098)	24.03	7500						
(0010004)	24.06		(0001005)	24.07				
(0001005)	24.07	753						
(0001013)	24.10	7530						
(0001016)	24.11	7531	(0001012)	24.09				
(0010020)	24.14		(0001021)	24.15				
(0010021)	24.15	754						
(0010028)	24.18	7540						
(0010033)	24.19	730	(0001028)	24.17				
(0010034)	24.20		(0001037)	24.21				
(0001037)	24.21	731						
(0010052)	25.01	400	(0000610)	16.03				
(0001100)	25.02	721	(0010052)	25.01				
(0001101)	25.03		(0001102)	25.04				
(0001102)	25.04	7220						
(0001106)	25.05	722	(0001097)	26.14				
(0010055)	25.07	715	(0001052)	25.01				
(0001063)	25.09	7150	(0001060)	25.08				
(0001067)	26.01	717	(0001060)	25.08				
(0001070)	26.02	7170	(0001064)	25.09				
(0001075)	26.04	719	(0001069)	26.12				
(0001076)	26.05		(0001077)	26.06				
(0001077)	26.06	7190						
(0001082)	26.08	7180	(0001080)	26.07				
(0001084)	26.10	718						
(0001088)	26.12	7181						
(0001092)	26.13	720	(0001090)	26.07	(0001083)	26.09	(0001087)	26.11
(0001111)	26.15	724	(0001107)	25.06				
(0001112)	26.16	7240						
(0001113)	26.17	725	(0001111)	26.15				
(0001123)	26.19	727	(0001107)	25.06				
(0001131)	26.21	799	(0001043)	24.23				

CHART TITLE - NON-PROCEDURAL STATEMENTS

CHART TITLE - INTRODUCTORY COMMENTS

CHART TITLE - SUBROUTINE SFSCH(DSTR)

(0001142)	29.01	SFSCH	(0000735)	19.12-X	(0000749)	19.19-X	(0001072)	26.03-X	(0001084)	26.10-X
(0001172)	29.01	3001								
(0001186)	29.05	3002	(0001184)	29.04						
(0001187)	29.06	3003								
(0001188)	29.07	3006	(0001184)	29.04						
(0001189)	29.08	3007	(0001187)	29.06						
(0001191)	29.09	3008	(0001186)	29.05						
(0001193)	29.10	3009	(0001184)	29.04						
(0001207)	29.15	3010								
(0001208)	29.16	3004								
(0001209)	29.17	3005								

CARD ID	PAGE/BOX	NAME	REFERENCES (SOURCE SEQUENCE NO. AND PAGE/BOX)							
(001213)	29 18	300	(001207) 29 15	(001200) 29 16						
(001216)	29 19	301	(001213) 29 18							
(001221)	30 01	302	(001213) 29 18							
(001223)	30 03	420								
(001226)	30 04	303	(001218) 29.19	(001222) 30.02						
(001229)	30 06	422								
(001230)	30 07	423	(001228) 30.05							
(001241)	30.09	4230								
(001243)	30.11	4231								
(001244)	30.12	4232	(001242) 30.10							
(001246)	30.14	4233								
(001248)	30.16	4234								
(001249)	30 17	4235	(001247) 30.15							
(001251)	30 18	4236	(001248) 30 16							
(001252)	30.19	4239	(001240) 30 03	(001245) 30 13	(001250) 30.17					
(001256)	30.21	4240								
(001265)	30 26	424								
(001268)	30 27	425	(001264) 30.25							
(001315)	30 28	480	(001255) 30.20							
(001322)	30 29	490	(001268) 30.27							
(001323)	30 30	4300								
(001324)	30.31	491								
(001271)	31.01	4250	(001268) 30.27							
(001279)	31 05	4251								
(001280)	31 06	426								
(001283)	31.07	427	(001279) 31.05							
(001285)	31 08	4270								
(001287)	31 09	431	(001285) 31 08							
(001292)	31.10	306	(001285) 31 08	(001310) 31 24						
(001296)	31.13	304	(001294) 31 12							
(001297)	31.14		(001298) 31 16							
(001298)	31.15	432								
(001300)	31.18	433	(001346) 32.08	(001348) 32 10						
(001302)	31 19	309	(001300) 31 18 (001425) 36.09	(001348) 32 10 (001469) 37 02	(001399) 33 14 (001704) 44.11	(001470) 35 20	(001459) 35.03			
(001303)	31 20	330	(001308) 34.03	(001473) 38.01						
(001304)	31 21		(001305) 31.23							
(001305)	31 22	310								
(001308)	31.24	305	(001294) 31.12							
(001327)	31 25	492	(001317) 30.28	(001323) 30 30						
(001331)	31 26	493	(001323) 30.30	(001330) 30 31						
(001336)	32 01	307	(001294) 31 12							
(001337)	32.02	308								
(001337)	32 02		(001337) 32.03							
(001347)	32 09	311								
(001364)	33 01	3141	(001362) 33.12							
(001350)	33 03	312	(001348) 32.10							
(001355)	33 04	320	(001401) 33.15							
(001358)	33 07	313								
(001360)	33 09		(001361) 33.11							
(001361)	33.10	314								
(001363)	33.13	3140								
(001399)	33.14	318	(001357) 33.06							
(001400)	33.15	319								
(001406)	33.16	324	(001365) 33.02	(001363) 33.13	(001403) 35 16					
(001410)	33 17	354	(001501) 48.01							
(001470)	33 20	343	(001412) 33.19	(001418) 36 03	(001468) 37.01					
(001367)	34.01	315	(001365) 33.02	(001397) 35 21						
(001387)	34.03	329	(001368) 34.02 (001701) 43.10	(001385) 35.19	(001435) 36 15	(001451) 36.25	(001469) 37.02			
(001456)	35.01	340	(001382) 35.14							
(001459)	35 03	411								
(001372)	35.04	323	(001368) 34.02	(001405) 35.17						
(001375)	35.07	316								
(001377)	35.09		(001378) 35.11							
(001378)	35.10	3161								
(001380)	35.12	326	(001423) 36.00	(001448) 36 23	(001515) 40.07	(001516) 40.08				
(001382)	35.14	3262								
(001403)	35.15	321	(001374) 35.06							
(001404)	35.17	322								
(001384)	35.18	327	(001382) 35.14							
(001385)	35.19	328								
(001389)	35 20	317	(001384) 35.18							

CARD ID	PAGE/BOX	NAME	REFERENCES (SOURCE SEQUENCE ID) AND PAGE/BOX							
(0019416)	36.01	3940	(0019412)	33.19						
(0019419)	36.04	345	(0015777)	41.03						
(0019421)	36.06		(0019422)	36.03						
(0019422)	36.07	337								
(0019425)	36.09	331	(0017022)	35.14						
(0019427)	36.10	332	(0019425)	36.09						
(0019428)	36.11		(0019429)	36.13						
(0019429)	36.12	333								
(0019431)	36.16	334	(0019435)	36.15	(0019453)	36.26				
(0019444)	36.19	335	(0015609)	41.01						
(0019446)	36.21		(0019447)	36.23						
(0019447)	36.22	336								
(0019450)	36.24	337	(0019453)	36.18	(0015677)	39.36	(0015280)	40.11		
(0019452)	36.26	339								
(0019460)	37.01	341	(0019465)	37.05						
(0019463)	37.02	342								
(0019463)	37.03	412	(0019459)	35.03						
(0016277)	37.06	380	(0019466)	37.07						
(0016278)	37.07	381								
(0016279)	37.08	3811								
(0016330)	37.09	382								
(0016330)	37.09		(0016330)	37.10						
(0016333)	37.12	383								
(0017264)	37.13	393	(0013065)	31.23	(0013336)	31.29	(0019460)	37.05	(0016277)	37.06	(0016222)	43.02
			(0017199)	45.03	(0017201)	45.09	(0017214)	45.12				
(0017254)	37.14	3990										
(0017254)	37.14		(0017254)	37.15								
(0017333)	37.17	3999										
(0016511)	37.18	388	(0016327)	37.11								
(0016447)	37.19	386	(0016333)	37.12								
(0019472)	38.01	344	(0019470)	33.20	(0019428)	35.02	(0013305)	35.19	(0016223)	41.10	(0017000)	43.09
(0019477)	39.01	350	(0013309)	31.18								
(0019491)	39.06	351										
(0019493)	39.08		(0019494)	39.10								
(0019494)	39.09	352										
(0015394)	39.11	361	(0019495)	39.05								
(0015395)	39.12	360	(0015311)	40.12								
(0015399)	39.15	362	(0015337)	39.13								
(0015400)	39.16	367	(0015984)	41.07								
(0015423)	39.20	355	(0019495)	39.14	(0015276)	40.10						
(0015511)	39.24	363	(0015448)	39.19								
(0015544)	39.26		(0015555)	39.28								
(0015555)	39.27	369										
(0019497)	40.01	3 1	(0019495)	39.14	(0015280)	40.11	(0015609)	41.01				
(0015111)	40.02	356	(0015109)	39.23								
(0015113)	40.04		(0015114)	40.06								
(0015114)	40.05	357										
(0015116)	40.08	358										
(0015118)	40.09	359	(0015116)	40.08								
(0015280)	40.11	360	(0015093)	39.23	(0016602)	41.16						
(0015330)	40.12	3690	(0015593)	41.21								
(0015609)	41.01	3650	(0015677)	39.36								
(0015700)	41.02	3851										
(0015980)	41.04	385	(0015948)	39.19								
(0015982)	41.06	366										
(0016211)	41.08	377	(0015811)	41.05	(0015886)	41.17	(0016115)	42.06				
(0015906)	41.11	371	(0016223)	41.10	(0015993)	41.21	(0016113)	42.05				
(0015999)	41.13		(0016000)	41.15								
(0016000)	41.14	372										
(0015988)	41.17	368	(0015337)	39.13								
(0015987)	41.18	370	(0015984)	41.07	(0016118)	42.08						
(0016005)	42.01	373	(0015337)	39.13								
(0016006)	42.02	376	(0016118)	42.08								
(0016115)	42.06	374	(0016113)	42.05								
(0016116)	42.07	375										
(0016135)	42.09	384	(0016333)	37.12								
(0016140)	42.10	391	(0016663)	43.01								
(0016142)	42.11	387	(0016150)	37.19	(0016156)	42.15						
(0016143)	42.12		(0016144)	42.14								
(0016144)	42.13	345										
(0016153)	42.15	389	(0016151)	37.18								
(0016158)	43.01	390	(0016151)	37.18								

CARD ID	PAGE/REF	NAME	REFERENCES (SYMBOL SEQUENCE NO AND PAGE/REF)							
(0016660)	93.02	3[illegible]	(0016920)	37.11						
(0016690)	93.03	395	(0016660)	93.02						
(0016890)	93.07	397								
(0016930)	93.08	401	(0016680)	93.06	(0016970)	95.03				
(0017000)	93.09	402								
(0017010)	93.10	403	(0016930)	93.09	(0017050)	94.10	(0017170)	95.07		
(0016680)	94.01	3[illegible]4	(0016260)	93.02						
(0016750)	94.05	3[illegible]6								
(0016770)	94.06	3[illegible]8	(0016910)	93.07						
(0016700)	94.07		(0016790)	94.03						
(0016790)	94.03	395								
(0017030)	94.10	404	(0016740)	94.04	(0016970)	95.03				
(0017040)	94.11	405								
(0016920)	95.01	403	(0016260)	92.14	(0016200)	94.09				
(0017110)	95.04	403	(0016970)	95.03						
(0017190)	95.08	403	(0017170)	95.07						
(0017200)	95.09	410								
(0017060)	95.10	406	(0017000)	93.09	(0017010)	93.10	(0017040)	94.11	(0017190) 95.08	(0017200) 95.09
(0017070)	95.11	407								
(0017070)	95.11		(0017070)	95.12						

CHART TITLE NON-FUNCTIONAL STATEMENTS

CHART TITLE INTRODUCTORY COMMENTS

CHART TITLE SUBROUTINE EXIT

(0017430)	98.01	801	(0000901)	22.03 X	(0012600)	30.23 X	(0012750)	31.01 X		
(0017670)	98.01	560								
(0017730)	98.03	561	(0017700)	98.02						
(0017770)	98.04	562	(0017700)	98.02						
(0017810)	99.01	563	(0017700)	98.02						
(0017850)	99.02	56	(0017810)	99.01						
(0017890)	99.04	569	(0017780)	98.05						
(0017920)	99.05	91	(0017890)	99.04						
(0017960)	99.07	93	(0017930)	99.06						
(0018000)	50.01	92	(0017930)	99.06	(0018050)	51.02				
(0018040)	51.01	99	(0017930)	99.06	(0018050)	51.02				
(0018050)	51.03	95								
(0018070)	51.14	96								
(0018290)	51.15	97	(0018350)	51.13	(0018370)	51.19				
(0018340)	51.18	98	(0018310)	51.17						
(0018350)	51.19	51	(0018430)	52.02						
(0018460)	51.20	52	(0018340)	51.18	(0018430)	52.02				
(0018510)	51.23	55								
(0018540)	51.24	530								
(0018570)	52.01	50	(0018340)	51.18	(0018430)	52.02				
(0018430)	52.02	49	(0018310)	51.17						
(0018590)	52.03	60	(0017780)	98.05	(0017810)	99.01				
(0018610)	52.04	601								
(0018680)	52.07	61	(0018750)	52.06						
(0018710)	52.10	610	(0018760)	52.13						
(0018740)	52.13	611								
(0018920)	52.14	66	(0018730)	52.12	(0018020)	53.03				
(0018960)	52.17	67	(0019070)	54.04	(0019140)	54.08	(0019580)	56.05		
(0018980)	52.18	68	(0018950)	52.16						
(0018790)	53.01	62	(0018650)	52.06	(0018850)	53.05				
(0018830)	53.04	63								
(0018860)	53.06	64	(0018650)	52.06	(0018780)	52.09				
(0018880)	53.07	65	(0018730)	52.12	(0018020)	53.03				
(0019010)	54.01	69	(0018950)	52.16						
(0019030)	54.02	70	(0018980)	52.18						
(0019080)	54.05	700								
(0019150)	54.09	701								
(0019180)	54.12	702								
(0019210)	54.13	71	(0019180)	54.12						
(0019230)	54.14	81	(0019580)	56.01						
(0019280)	55.01	72	(0019180)	54.12						
(0019300)	55.02	80	(0019440)	55.09						
(0019320)	55.03	73	(0019250)	54.14						
(0019360)	55.05	730								

CARD ID	PAGE/BOX	NAME	REFERENCES (SOURCE SEQUENCE NO. AND PAGE/BOX)				
(001939)	55.06	731	(001935) 55.04				
(001941)	55.08	732					
(001944)	55.09	74	(001941) 55.08				
(001945)	55.10	78					
(001950)	56.01	82	(001941) 55.08				
(001951)	56.02	83					
(001955)	56.03	78	(001947) 55.10				
(001958)	56.06	780					
(001964)	56.08	53	(001797) 49.07 (001937) 55.05	(001894) 51.24	(001897) 52.17	(001807) 53.06	(001809) 53.07
(001965)	56.09	54	(001836) 51.13 (001940) 55.07	(001850) 51.22 (001944) 55.09	(001848) 52.01 (001950) 56.01	(001917) 54.11	(001918) 54.12
(001968)	56.11	99	(001852) 50.01				
(001971)	56.12	531	(001709) 49.04	(001968) 56.11			
(001976)	56.13	549	(001968) 56.11				

CHART TITLE - NON-PROCEDURAL STATEMENTS

CHART TITLE - INTRODUCTORY COMMENTS

CHART TITLE - SUBROUTINE BOTC(SFCI,RDTI)

(001986)	59.01	BOTC	(001862) 52.05-X (001906) 54.03-X	(001891) 52.00-X (001915) 54.09-X	(001872) 52.11-X (001930) 55.06-X	(001894) 52.15-X (001957) 56.04-X	(001801) 53.02-X
(002004)	59.01	100					
(002011)	59.04	110	(002000) 59.03	(002032) 60.01			
(002015)	59.05	111					
(002018)	59.06	120	(002015) 59.05				
(002021)	59.07	129	(002015) 59.05	(002035) 60.02			
(002025)	59.09	1290					
(002026)	59.10	1291	(002024) 59.08				
(002027)	59.11	1298	(002024) 59.08	(002025) 59.09			
(002029)	59.12	1293	(002025) 59.09	(002026) 59.10			
(002032)	60.01	130	(002008) 59.03				
(002033)	60.02	131					
(002039)	60.03	199	(002029) 59.12				

CHART TITLE - NON-PROCEDURAL STATEMENTS

CHART TITLE - INTRODUCTORY COMMENTS

CHART TITLE - SUBROUTINE TSCH(SFCI)

(002050)	63.01	TSCH	(001293) 31.11-X (001417) 36.02-X (001508) 39.22-X (001687) 43.05-X	(001332) 31.27-X (001442) 36.17-X (001565) 39.34-X (001673) 44.03-X	(001345) 32.07-X (001450) 37.04-X (001602) 41.09-X (001716) 45.06-X	(001356) 33.05-X (001508) 39.04-X (001592) 41.20-X	(001373) 35.05-X (001546) 39.18-X (001612) 42.04-X
(002090)	63.01	98					
(002100)	63.04	99					
(002113)	63.09	5001					
(002118)	63.11	5002					
(002119)	63.12	5003					
(002122)	63.13	5004	(002117) 63.10				
(002127)	63.15	5005					
(002129)	63.16	5006	(002121) 63.12	(002124) 63.14			
(002136)	63.19	5007	(002134) 63.18				
(002138)	63.21	5008					
(002140)	63.22	5009	(002134) 63.18	(002137) 63.20			
(002142)	63.24	5011					
(002147)	63.25	5019	(002118) 63.11	(002134) 63.18	(002141) 63.23		
(002152)	63.26	5020					
(002155)	64.01	5000	(002152) 63.26				
(002158)	64.02	500	(002155) 64.01	(002255) 66.18	(002279) 67.09		
(002161)	64.04	1500					
(002163)	64.06	5101					
(002164)	64.07	1501	(002160) 64.03	(002162) 64.05			
(002168)	64.08	501	(002155) 64.01	(002215) 65.12			
(002174)	64.11	640					
(002175)	64.12	645	(002173) 64.10				
(002178)	64.14	650					
(002184)	64.15	655	(002211) 65.11				
(002223)	64.16	5010	(002178) 64.13				
(002185)	65.01	651	(002184) 64.15				
(002188)	65.02	652	(002184) 64.15				

CARD ID	PAGE/BOX	NAME	REFERENCES (SOURCE SEQUENCE NO AND PAGE/BOX)							
(0021980)	65 06	1652								
(0022000)	65 08	5103								
(0022001)	65 09	1653	(0021977)	65 05	(0021999)	65 07				
(0022007)	65 10	653	(0021952)	63 26						
(0022009)	65 11	654	(0022007)	65 10						
(0022014)	65 12	656	(0022007)	65 10						
(0022025)	65 13	701	(0022023)	64 16						
(0022032)	65 16	702								
(0022034)	66.01	703	(0022311)	65 15						
(0022036)	66 02	707	(0026301)	68 21						
(0022039)	66 04		(0022042)	66 05						
(0022042)	66 05	704								
(0022043)	66 06	700	(0022023)	64 16	(0022033)	65 16				
(0022045)	66 08	1502								
(0022047)	66 10	5105								
(0022060)	66 11	1503	(0022044)	66 07	(0022060)	66 09				
(0022511)	66 13	711								
(0026311)	66 14	5991	(0022500)	66 12	(0026264)	68 17	(0026265)	68 18	(0026267)	68 20
(0026411)	66 16	5999								
(0022564)	66 17	503	(0022511)	66 13						
(0022568)	66 19	601	(0022565)	66 18						
(0022767)	67 01	600	(0022511)	66 13						
(0022771)	67 02	504	(0022511)	66 13						
(0022772)	67 03	505								
(0022774)	67 05	506								
(0022775)	67 06	507	(0022773)	67 04						
(0022776)	67 07	508								
(0022777)	67 08	509	(0022775)	67 06						
(0022938)	67 10	516	(0022930)	67 15						
(0022831)	67 11	514	(0022611)	66 19	(0022779)	67 09				
(0022911)	67 16	5130								
(0023011)	67.17	515	(0022990)	67 15						
(0022994)	67 18	513	(0022991)	67.16						
(0023114)	68 01	526	(0023112)	68 10						
(0023115)	68 02		(0023116)	68 04						
(0023116)	68 03	527								
(0023111)	68.03	520	(0023039)	68.13						
(0023121)	68 10	522								
(0023051)	68 11	517	(0022911)	67 16						
(0023081)	68 12	518	(0022995)	67.18						
(0023091)	68.13	519								
(0026171)	68.14	599	(0021651)	64 07	(0022021)	65.09	(0022991)	67 10	(0023021)	67 17
			(0023121)	68 10	(0023081)	68 12	(0023091)	68 13	(0023391)	69 03
			(0025341)	74 15	(0025971)	76.24	(0025981)	76 25	(0026031)	76 28
(0023111)	68 09									
(0023671)	70 05									
(0026000)	76.30									
(0026181)	68 15	597								
(0026191)	68 16	596								
(0026241)	68 17	5990	(0026171)	68 14	(0026181)	68.15				
0026251	60 18	705								
(0026281)	68 21	706								
(0023271)	69 01	523	(0023251)	68 08	(0023311)	69 04	(0025231)	74 09	(0025241)	74.18
			(0025271)	75.03						
(0023281)	69 02	524								
(0023281)	69.02		(0023281)	69.03						
(0023311)	69.04	525	(0023251)	68 08						
(0023331)	69 05	530	(0023311)	69 04						
(0023491)	69 10	531	(0023471)	69 09	(0023601)	69 14	(0023881)	70 19		
(0023601)	69 14	533	(0023561)	69 13						
(0023631)	70 01	535	(0023601)	69 14	(0024441)	71 17	(0025071)	73.12	(0025031)	73.20
			(0026001)	76.30						
(0023641)	70.02	546	(0024361)	71 13	(0024331)	72.13				
(0023651)	70.03		(0023661)	70.05						
(0023661)	70 04	536								
(0023691)	70 06	532	(0023471)	69.09						
(0023701)	70 07	537								
(0023701)	70 07		(0023701)	70.08						
(0023741)	70.11	538	(0023721)	70.10	(0024021)	71.14				
(0023791)	70 13		(0023801)	70 15						
(0023801)	70 14	540								
(0023891)	70 20	541								
(0023901)	70.21		(0023911)	71.01						
(0023911)	70.22	539								
(0023971)	71 05	542								
(0023981)	71 06	5420								
(0023991)	71.07	5421								

CARD ID	PAGE/BOX	NAME	REFERENCES (CARD ID SEQUENCE NO. AND PAGE/BOX)					
(0026011)	71.09	5422						
(0026391)	71.10	550	(0023396) 71.04 (0025001) 73.18	(0026001) 71.08	(0026621) 71.27	(0026301) 72.18	(0026741) 72.27	
(0026401)	71.11	5500						
(0026351)	71.13	547	(0023371) 71.05 (0026431) 74.09	(0026011) 71.03 (0025211) 76.25	(0026331) 72.13 (0025691) 76.29	(0026771) 72.20	(0025191) 74.03	
(0026021)	71.14	5424	(0023981) 71.06					
(0026031)	71.15	5426						
(0026431)	71.16	551	(0026411) 71.12					
(0026441)	71.17	552	(0026541) 71.20					
(0026461)	71.18	553	(0026431) 71.16					
(0026551)	71.21	5530						
(0026571)	71.23	554	(0026511) 72.22					
(0026601)	71.25		(0026611) 71.27					
(0026611)	71.26	556						
(0026071)	72.01	549	(0023561) 69.13					
(0026081)	72.02		(0026091) 72.04					
(0026091)	72.03	548						
(0026131)	72.06	544	(0023721) 70.10	(0026041) 71.15				
(0026251)	72.11	543						
(0026321)	72.12	545	(0026441) 71.17 (0025271) 75.04	(0026541) 72.10 (0026031) 76.28	(0025071) 73.12	(0025131) 74.02	(0025261) 75.02	
(0026271)	72.15		(0026281) 72.17					
(0026281)	72.16	544						
(0026361)	72.19	555	(0026761) 71.22					
(0026701)	72.23	557						
(0026711)	72.24		(0026721) 72.26					
(0026721)	72.25	558						
(0026771)	72.28	560	(0026441) 71.12					
(0026791)	73.01	561	(0026771) 72.28					
(0026801)	73.02		(0026811) 73.04					
(0026811)	73.03	562						
(0026841)	73.07	563	(0025051) 73.21					
(0026891)	73.08	5630						
(0026941)	73.10	564	(0026971) 73.06					
(0025071)	73.12	568	(0026081) 73.07					
(0026981)	73.14	565						
(0026981)	73.16		(0026991) 73.18					
(0026991)	73.17	566						
(0025021)	73.19	567	(0026991) 73.13					
(0025041)	73.21	5670						
(0025111)	74.01	570	(0026441) 71.12					
(0025191)	74.03	569						
(0025161)	74.04	5701	(0025191) 74.03					
(0025211)	74.07	571	(0025541) 74.19	(0025491) 76.12	(0025661) 76.22			
(0025421)	74.08	572	(0025461) 76.23	(0026011) 76.26				
(0025231)	74.09	573	(0025451) 75.01	(0025971) 76.24	(0026021) 76.27			
(0025301)	74.10	574	(0025201) 74.06					
(0025311)	74.11	575						
(0025311)	74.11		(0025311) 74.12					
(0025341)	74.15	510						
(0025351)	74.16	511						
(0025391)	74.17	582	(0025561) 74.20					
(0025261)	74.18	574	(0025221) 74.08					
(0025591)	74.19	585	(0025331) 74.14					
(0025461)	74.20	584	(0025341) 74.15					
(0025251)	75.01	575	(0025211) 74.07					
(0025261)	75.02	576						
(0025271)	75.03	577						
(0025561)	75.04	586	(0025541) 74.19					
(0025611)	75.05	589	(0025591) 74.19					
(0025641)	75.06	583	(0025591) 75.04					
(0025651)	75.07		(0025661) 75.09					
(0025661)	75.08	5831						
(0025691)	75.11		(0025701) 75.13					
(0025701)	75.12	5832						
(0025741)	76.01	587	(0025421) 74.17					
(0025751)	76.02		(0025761) 76.04					
(0025761)	76.03	588						
(0025801)	76.05	590	(0025731) 75.14					
(0025841)	76.06	5900						
(0025851)	76.10	5901	(0025831) 76.08					
(0025861)	76.11		(0025881) 76.12					

```
CARD ID   PAGE/LOC   NAME                    REFERENCES (SOURCE SEQUENCE NO. AND PAGE/LOC)

(0025381)  76.12  5932
(0025381)  76.13  533          (0025431)  76.08
(0026121)  76.17  596
(0026131)  76.18  595
(0025111)  76.19  591          (0025111)  76.16    (0026121)  76.17    (0026131)  76.18
(0025121)  76.20  592
(0025121)  76.20               (0025121)  76.21
(0025351)  76.22  530          (0025121)  76.17    (0026131)  76.18
(0025361)  76.23  5310
(0025371)  76.24  5311
(0025381)  76.25  5312         (0025021)  76.27
(0025111)  76.26  5315         (0025351)  76.22
(0025021)  76.27  5316
(0025031)  76.28  5317
(0025111)  76.29  5333         (0025351)  76.23    (0025111)  76.26
(0025031)  76.30  5334

CHART TITLE - NON EXECUTABLE STATEMENTS

CHART TITLE - INTRODUCTORY COMMENTS

CHART TITLE - SUBROUTINE STDARIS(I)

(0025511)  79.01  STDAR        (0021195)  69.04 X   (0022021)  67.13 X   (0022541)  69.07 X   (0023161)  69.01 X   (0023561)  69.12 X
                                (0023671)  70.10 X   (0023731)  72.03 X   (0024021)  72.21 X   (0024591)  73.10 X   (0024191)  74.02 X
                                (0024691)  70.14 X
(0025771)  79.01  193
(0025801)  79.03  105          (0025781)  79.02
(0025821)  79.05  107          (0025821)  79.05
(0025911)  79.09  1070
(0025951)  79.11  105
(0025981)  79.13  100
(0027031)  79.15  99           (0025781)  79.02    (0025901)  79.01
(0027051)  80.01  130          (0027031)  79.15
(0027061)  81.02  97
(0027071)  81.03  96           (0027051)  81.01
(0027171)  81.04  131          (0025971)  79.12    (0027011)  79.14    (0027031)  79.15
(0027211)  81.05  133
(0027251)  81.06  132
(0027441)  81.11  98
(0027511)  81.12  101          (0027431)  81.10
(0027571)  81.15  1030
(0027581)  81.16  1031         (0027621)  81.14
(0027681)  81.18  103          (0027661)  81.20
(0027611)  81.19  102          (0027591)  81.17
(0027651)  81.21  104          (0027491)  81.03    (0027611)  81.18
(0027721)  82.01  120          (0027701)  81.22
(0027781)  82.02  110          (0025021)  79.05    (0025941)  79.10    (0027141)  80.03    (0027701)  81.22

CHART TITLE - NON PROCEDURAL STATEMENTS

CHART TITLE - INTRODUCTORY COMMENTS

CHART TITLE - SUBROUTINE STRG

(0027881)  85.01  STRG         (0025811)  79.04-X
(0028041)  85.02  50
(0028051)  85.03  51
(0028061)  85.05  60           (0028041)  85.02
(0028081)  85.06  70           (0028061)  85.05    (0031261)  98.01    (0031391)  98.09    (0031561)  98.16
(0028091)  85.08  52
(0028091)  85.10  71           (0028091)  85.07
(0028761)  85.12  720          (0028761)  85.11
(0028771)  85.13  722
(0028791)  85.15  721
(0028831)  86.01  729          (0028761)  85.11
(0028851)  86.02  72           (0028831)  86.01
(0028861)  86.03  73           (0028941)  87.06
(0028991)  87.01  76           (0028781)  85.14    (0028811)  85.15    (0028941)  87.06    (0028971)  87.07
(0029081)  87.02               (0029011)  87.03
(0029011)  87.03  77
(0029911)  87.05  74           (0028831)  86.01
```

CARD ID	PAGE/BOX	NAME	REFERENCES (SOURCE SEQUENCE NO. AND PAGE/BOX)							
(002897)	07.07 75		(002874) 07.06							
(002836)	08.01 323		(002876) 05.12							
(002915)	08.03 80		(002897) 07.07							
(002916)	08.04 800									
(002920)	08.0. 81		(002918) 08.05							
(002922)	08.07 82		(002920) 08.06							
(002925)	08.09 83		(002920) 08.06	(002923) 08.08						
(002929)	09.01 84		(002920) 08.06							
(002931)	09.02 85		(002927) 08.10	(002929) 09.01						
(002934)	09.03 86		(002927) 08.10							
(003071)	90.01 100		(002942) 90.05	(002949) 90.07						
(002927)	90.04 87		(002923) 08.08	(002929) 09.01						
(002942)	90.05 90		(002918) 08.05							
(002945)	90.06 91		(002942) 90.05							
(002949)	90.07 92		(002942) 90.05	(002945) 90.06						
(002953)	91.01 93		(002949) 90.07							
(002956)	91.02 94		(002953) 91.01							
(002960)	91.03 95		(002956) 91.02							
(002965)	91.06 96		(002965) 91.05	(003031) 94.05						
(002974)	91.08 97		(002983) 92.09							
(002975)	91.09 970		(003002) 92.14							
(003160)	92.01 999		(003159) 92.05	(003161) 92.07	(003156) 90.16					
(003160)	92.02 53									
(003173)	92.04 9999		(003160) 92.01							
(003158)	92.05 99		(002899) 08.03 (002939) 90.04 (003031) 94.05 (003082) 08.10	(002903) 07.04 (002965) 91.05 (003066) 94.09 (003096) 97.01	(002911) 08.02 (002976) 91.09 (003056) 95.09 (003103) 97.02	(002935) 09.03 (002933) 92.12 (003059) 98.02	(003076) 90.03 (003012) 93.05 (003084) 96.06			
(003160)	92.06 04									
(003162)	92.08 040									
(002980)	92.09 98		(002985) 91.05	(002993) 92.12	(003066) 94.09					
(002988)	92.10 110		(002956) 91.02							
(002988)	92.13 112		(002933) 92.12	(003012) 93.05	(003059) 98.02					
(003005)	93.01 120		(002953) 91.01							
(003007)	93.02 121		(003005) 93.01	(003046) 95.06						
(003008)	93.03 122		(003043) 95.03							
(003016)	93.06 123		(003012) 93.05							
(003024)	94.01 124		(003005) 93.01							
(003025)	94.02 125		(003024) 94.01							
(003084)	94.06 141		(003031) 94.05	(003058) 98.02						
(003030)	95.01 127		(003024) 94.01							
(003045)	95.04 128		(003043) 95.03							
(003058)	95.07 129		(003066) 94.09	(003046) 95.06						
(003055)	95.09 1290		(003020) 93.07							
(003058)	98.01 140		(003043) 95.03							
(003078)	98.03 101		(003076) 90.03							
(003081)	98.05 102		(003079) 98.04	(003112) 97.08						
(003085)	98.07 103		(003084) 98.06							
(003089)	98.09 104									
(003084)	98.10 105		(003088) 98.08							
(003094)	97.01 106		(003078) 98.04	(003112) 97.08						
(003088)	97.02 107		(002945) 90.06							
(003106)	97.03 130		(002945) 90.06							
(003110)	97.05 131		(003106) 97.04							
(003111)	97.06 132									
(003112)	97.07 133		(003110) 97.05	(003110) 97.11	(003121) 97.13					
(003115)	97.09 134		(003108) 97.04							
(003116)	97.10 135									
(003117)	97.11 136		(003119) 97.12							
(003119)	97.12 137		(003115) 97.09							
(003120)	97.13 138									
(003126)	98.01 61		(000098) 05.05							
(003127)	98.02 610									
(003132)	98.04 611									
(003135)	98.06 612									
(003136)	98.07 613		(003131) 98.03	(003134) 98.05						
(003138)	98.08 614									
(003143)	98.10 62		(003137) 98.08							
(003145)	98.11 63		(003104) 92.08							
(003148)	98.13		(003151) 98.14							
(003154)	98.14 630									

CHART TITLE - NON-PROCEDURAL STATEMENTS

```
CARD ID   PAGE/BOX   NAME                          REFERENCES  (SOURCE SEQUENCE NO. AND PAGE/BOX)

CHART TITLE - INTRODUCTORY COMMENTS

CHART TITLE - SUBROUTINE  SIRGO

(003183)  101.01  SIRGO        (002243)  86.06-X   (003194)  98.15-X
(003205)  101.01  5010
(003209)  101.03  610          (003207) 101.02
(003211)  101.04  611          (003209) 101.03
(003212)  101.05  613
(003215)  101.08  622          (003218) 101.07     (003232) 102.04
(003220)  102.01  620          (003207) 101.02
(003229)  102.03  621          (003209) 101.03
(003239)  102.05  623          (003232) 102.04
(003240   102.06  624
(003241)  102.07  625          (003239) 102.05
(003242)  102.08  626
(003243)  102.09  627          (003241) 102.07
(003247)  102.10  630          (003232) 102.04
(003249)  102.12  631
(003250)  102.13  632          (003248) 102.11
(003251)  102.14  633
(003252)  102.15  634          (003250) 102.13
(003253)  102.16  635          (003251) 102.14
(003256)  102.17  638          (003251) 102.14
(003259)  102.18  640          (003218) 101.07     (003244) 102.09
(003261)  102.20  641
(003262)  102.21  642          (003260) 102.19
(003265)  102.22  502          (003236) 101.08     (003226) 102.02
(003270)  102.23  999

CHART TITLE - NON-PROCEDURAL STATEMENTS

CHART TITLE - INTRODUCTORY COMMENTS

CHART TITLE - SUBROUTINE  STRIL

(003317)  105.01  6003         (003307) 105.09
(003321)  105.02  6004         (003307) 105.09
(003281)  105.08  STRIL        (002685)  79.06-X
(003301)  105.05  6000
(003305)  105.08  6001
(003324)  105.10  60           (003304) 105.07
(003310)  105.12  6002         (003307) 105.09
(003340)  105.13  600          (003337) 105.11
(003343)  106.01  601          (003337) 105.11     (003340) 105.13
(003344)  106.02  602          (003337) 105.11
(003345)  106.03  603          (003340) 105.13
(003354)  106.06               (003356) 106.07
(003356)  106.07  61
(003361)  106.09  62           (003331) 105.05
(003370)  106.12  621          (003367) 106.11
(003377)  107.01  620          (003367) 106.11
(003381)  107.02  63           (003374) 106.13
(003382)  107.03               (003385) 107.05
(003385)  107.05  64
(003388)  107.06  65
(003388)  107.07  650
(003390)  107.08  651          (003386) 107.07
(003403)  107.09  652          (003386) 107.07
(003408)  107.10  653          (003400) 107.08
(003413)  107.12  660          (003408) 107.11
(003417)  107.13  661          (003409) 107.11
(003419)  107.14  662          (003313) 105.12
(003422)  107.15  66           (003409) 107.11
(003426)  107.16  69

CHART TITLE - NON-PROCEDURAL STATEMENTS

CHART TITLE - INTRODUCTORY COMMENTS
```

```
CARD ID   PAGE/BOX   NAME                    REFERENCES (SOURCE SEQUENCE NO. AND PAGE/BOX)

CHART TITLE - SUBROUTINE  STRIB

(003436)  110.01  STRIB       (002723)  81.06-X
(003460)  110.01  100
(003463)  110.03  1100
(003464)  110.04  1101        (003462) 110.02
(003477)  110.10  1102
(003480)  110.11  1103        (003477) 110.10
(003483)  110.12  110         (003480) 110.11
(003500)  111.01  113         (003500) 110.13
(003502)  111.02  114         (003[illegible]) 111.01
(003506)  111.04              (003505) 111.03
(003502)  111.07  115
(003503)  111.08  1141
(003505)  111.09  1140
(003506)  111.10  116         (003501) 111.06    (003502) 111.07    (003510) 111.11    (003520) 111.16
(003510)  111.11  117         (003501) 111.06
(003511)  111.12  1170
(003521)  111.17  1171
(003526)  111.20  111         (003476) 110.03    (003507) 111.10
(003527)  112.01  112         (003466) 110.13
(003528)  112.02  119
(003529)  112.03  118         (003527) 112.01
(003530)  112.04  121         (003477) 110.10    (003480) 110.11    (003509) 111.01
(003531)  112.05  120         (003529) 112.03
(003532)  112.06  123
(003532)  112.06              (003532) 112.07
(003536)  112.10  125
(003537)  112.11  124         (003535) 112.09
(003543)  112.14  128         (003538) 112.13    (003548) 112.17
(003547)  112.17  129
(003560)  113.01  130         (003546) 112.16
(003564)  113.04  131
(003562)  113.07  126         (003538) 112.13    (003546) 112.16    (003553) 113.03
(003564)  113.09  132
(003571)  113.12  140
(003572)  113.13  141         (003570) 113.11
(003578)  113.16  142         (003576) 113.15
(003583)  113.17  143         (003576) 113.15
(003[illegible]7)  113.19  144
(003590)  113.21  145         (003566) 113.18
(003593)  113.22  199         (003580) 113.20

CHART TITLE - NON PROCEDURAL STATEMENTS

CHART TITLE - INTRODUCTORY COMMENTS

CHART TITLE - SUBROUTINE  SPRIB(TRBI)

(003603)  116.01  SPRIB       (003537) 112.11-X  (003545) 112.15-X  (003552) 113.02-X  (003563) 113.08-X
(003627)  116.05  190         (003625) 116.04
(003629)  116.06  197         (003625) 116.04
(003631)  116.07  198         (003629) 116.06
(003634)  116.08  198         (003625) 116.04    (003628) 116.05    (003629) 116.06
(003639)  116.11  191
(003640)  116.12  195         (003638) 116.10
(003643)  116.14  193
(003645)  116.15  192         (003642) 116.13
(003648)  116.16  194         (003642) 116.13    (003644) 116.14

CHART TITLE - NON-PROCEDURAL STATEMENTS

CHART TITLE - INTRODUCTORY COMMENTS

CHART TITLE - SUBROUTINE  STHEB(VO,DEPTH)

(003659)  119.01  STHEB       (001000)  24.04-X  (001018)  24.12-X
(003686)  119.01  200
(003691)  119.04  201
(003692)  119.05  202         (003690) 119.03
```

```
CARD ID   PAGE/BOX   NAME                    REFERENCES (SOURCE SEQUENCE NO. AND PAGE/BOX)

(003704)  119.03  210        (003701) 119.07
(003707)  119.09  211        (003704) 119.09
(003711)  119.10  212        (003704) 119.08
(003713)  119.11  213        (003708) 119.03
(003717)  120.01  240        (003701) 119.07
(003723)  120.04  241
(003727)  120.05  250        (003722) 120.03
(003730)  120.07  251
(003732)  120.08  2510       (003729) 120.06
(003738)  120.10  252
(003739)  120.11  2520       (003741) 120.13
(003740)  120.12  2521
(003742)  120.14  2522
(003743)  120.15  2523       (003739) 120.11
(003745)  121.01  2524       (003739) 120.11
(003751)  121.03  253        (003744) 120.15
(003754)  121.05  2530
(003757)  121.06  254        (003753) 121.04
(003760)  121.08  2540
(003761)  121.09  2541       (003759) 121.07
(003762)  121.10  2542
(003765)  121.12  2543       (003761) 121.09
(003769)  121.16  255        (003775) 121.20
(003773)  121.20  2550
(003773)  121.21  2551       (003772) 121.19
(003702)  121.25  2552
(003785)  122.01  2553       (003781) 121.24
(003787)  122.02  2554       (003784) 121.25
(003792)  122.05  2555
(003797)  122.10  2556
(003799)  122.11  256        (003768) 121.15    (003772) 121.19    (003781) 121.24
(003802)  122.12  257        (003796) 122.03
(003804)  122.14  2570
(003807)  122.15  2571       (003803) 122.13
(003812)  122.16  260        (003715) 119.11
(003815)  122.18  261
(003816)  122.19  262        (003814) 122.17
(003822)  122.20  299

CHART TITLE - NON-PROCEDURAL STATEMENTS

CHART TITLE - INTRODUCTORY COMMENTS

CHART TITLE - SUBROUTINE  SWEEP(TX)

(003833)  125.01  SWEEP      (003766) 121.13-X   (003770) 121.17-X   (003779) 121.22-X   (003788) 122.03-X   (003795) 122.08-X
                             (003799) 122.11-X
(003848)  125.01  100
(003851)  125.02  101
(003854)  125.03  99

CHART TITLE - NON-PROCEDURAL STATEMENTS

CHART TITLE - INTRODUCTORY COMMENTS

CHART TITLE - SUBROUTINE  EIGJC

(003885)  128.01  EIGJC      (000330)  9.22-X   (000345)  10.04-X
(003887)  128.03             (003888) 128.04
(003888)  128.04  000
(003913)  128.07  010        (003910) 128.06
(003914)  128.08             (003915) 128.09
(003915)  128.09  011
(003925)  128.11  020        (003918) 128.10
(003926)  128.12             (003929) 128.13
(003929)  128.13  021
(003931)  128.14  030        (003918) 128.10
(003934)  128.22  031
(003964)  128.24  032
(003978)  129.01             (003986) 129.05
(003983)  129.04  034
```

CARD ID	PAGE/BOX	NAME	REFERENCES (SOURCE SEQUENCE NO. AND PAGE/BOX)			
(003986)	129.05	035	(003982) 129.03			
(003993)	129.07	036				
(004007)	129.12	040				
(004008)	129.13	041				
(004011)	129.14	042	(004006) 129.11	(004007) 129.12		
(004024)	129.20		(004029) 129.22			
(004029)	129.22	043				
(004032)	129.23	044				
(004036)	129.24	050	(003910) 128.06			
(004044)	129.27	051				
(004046)	130.02	0510				
(004051)	130.03	052	(004043) 129.26	(004045) 130.01		
(004052)	130.04	0520				
(004053)	130.05		(004055) 130.06			
(004055)	130.06	0521				
(004058)	130.07	053	(004051) 130.03			
(004069)	130.10	054				
(004070)	130.11	055				
(004091)	130.16	056	(004069) 130.10			
(004100)	130.20	057	(004088) 130.15			
(004117)	130.23	058				
(004119)	130.25		(004121) 130.26			
(004121)	130.26	059				
(004124)	130.27	060				
(004125)	130.28	061				
(004126)	130.29		(004128) 130.30			
(004128)	130.30	062				
(004131)	130.31	099	(004124) 130.27			

CHART TITLE - NON-PROCEDURAL STATEMENTS

CHART TITLE - INTRODUCTORY COMMENTS

CHART TITLE - SUBROUTINE WCAL

(004141)	133.01	WCAL	(000339) 10.01-X			
(004174)	133.01	700				
(004189)	133.05	300	(004184) 133.04			
(004208)	133.11	200	(004184) 133.04			
(004213)	134.01	201	(004209) 133.12			
(004220)	134.04		(004222) 134.05			
(004222)	134.05	202				
(004234)	134.08	100	(004232) 134.07			
(004236)	134.09	101	(004232) 134.07			
(004239)	134.10	102	(004236) 134.09			
(004244)	134.11	103	(004236) 134.09			
(004246)	134.12	104	(004244) 134.11			
(004257)	134.13	105	(004244) 134.11			
(004258)	135.01	106	(004257) 134.13			
(004265)	135.03	107	(004262) 135.02			
(004271)	135.04	110	(004257) 134.13	(004262) 135.02		
(004272)	135.05		(004273) 135.06			
(004273)	135.06	111				
(004284)	135.09	112	(004322) 136.12			
(004287)	135.11	113	(004285) 135.10	(004285) 135.10		
(004291)	135.12	114	(004285) 135.10			
(004295)	136.01	115	(004285) 135.10			
(004301)	136.02	120	(004281) 135.08	(004288) 135.11	(004293) 135.12	
(004313)	136.08	121	(004310) 136.07	(004310) 136.07	(004310) 136.07	
(004325)	136.13	122	(004322) 136.12			
(004328)	136.14	123	(004310) 136.07			
(004332)	136.15	124	(004322) 136.12			
(004347)	136.18	150	(004203) 133.10			
(004348)	136.19	151				
(004352)	136.21	152	(004347) 136.18			
(004353)	136.22	153				
(004357)	136.23	154	(004352) 136.21			
(004358)	136.24	155				
(004362)	136.25	156	(004357) 136.23			
(004363)	136.26	157				
(004369)	136.27	199	(004209) 133.12	(004362) 136.25		

```
CARD ID   PAGE/BOX    NAME                        REFERENCES  (SOURCE SEQUENCE NO. AND PAGE/BOX)

CHART TITLE - NON-PROCEDURAL STATEMENTS

CHART TITLE - INTRODUCTORY COMMENTS

CHART TITLE - SUBROUTINE  WTCAL

(004380)  139.01  WTCAL        (000361)  10.11-X
(004420)  139.01  700
(004432)  139.03  701          (004429) 139.02
(004433)  139.04               (004434) 139.05
(004434)  139.05  702
(004436)  139.07               (004437) 139.08
(004437)  139.08  703
(004446)  139.09  710          (004429) 139.02
(004448)  139.10  711          (004438) 139.08
(004472)  139.18  712
(004477)  139.20  713          (004471) 139.17
(004478)  139.21               (004479) 139.22
(004479)  139.22  714
(004482)  139.23  715
(004494)  140.03  716
(004497)  140.04  717          (004493) 140.02
(004500)  140.06  7170
(004501)  140.07  7171
(004504)  140.08  718          (004499) 140.05     (004500) 140.06
(004520)  140.13  719
(004521)  140.14  720
(004555)  140.15  722          (004520) 140.13
(004528)  140.19  721          (004521) 140.14
(004573)  141.01  723          (004521) 140.14
(004574)  141.02               (004575) 141.03
(004575)  141.03  724
(004578)  141.04  730          (004568) 140.18
(004588)  141.07               (004587) 141.08
(004587)  141.08  731
(004662)  141.32  732
(004666)  141.34               (004667) 141.35
(004667)  141.35  733
(004677)  142.04               (004678) 142.05
(004678)  142.05  734
(004687)  142.10               (004688) 142.11
(004688)  142.11  735
(004691)  142.12  736
(004701)  142.15  740
(004702)  142.16               (004703) 142.17
(004703)  142.17  741
(004709)  142.19  750          (004551) 140.26
(004710)  142.20               (004711) 142.21
(004711)  142.21  751
(004715)  142.23               (004716) 142.24
(004716)  142.24  752
(004740)  143.02               (004742) 143.03
(004742)  143.03  754
(004764)  143.06  760
(004765)  143.07  755
(004771)  143.08  790          (004764) 143.06

CHART TITLE - NON-PROCEDURAL STATEMENTS

CHART TITLE - INTRODUCTORY COMMENTS

CHART TITLE - SUBROUTINE  BKOJT

(004782)  146.01  BKOJT        (004497) 140.04-X
(004807)  146.01  700
(004808)  146.02               (004808) 146.03
(004809)  146.03  7000
(004813)  146.04  701
(004819)  146.07  7010
(004822)  146.08  702          (004818) 146.06
```

CARD ID	PAGE/BOX	NAME	REFERENCES (SOURCE SEQUENCE NO. AND PAGE/BOX)				
(0004823)	146.03		(0004825) 146.10				
(0004825)	146.10	703					
(0004829)	146.11	710					
(0004833)	146.13		(0004839) 146.19				
(0004834)	146.14	7100					
(0004835)	146.15	7101	(0004833) 146.13				
(0004837)	146.17	7102					
(0004838)	146.18	7103	(0004836) 146.16				
(0004839)	146.19	7109					
(0004845)	146.21	711					
(0004847)	146.23	7110					
(0004851)	146.24	7111	(0004846) 146.22				
(0004858)	146.26	712	(0004855) 146.25				
(0004861)	147.01	713	(0004865) 146.25				
(0004864)	147.02	714	(0004861) 147.01				
(0004865)	147.03	7140					
(0004866)	147.04	7141					
(0005063)	147.05	750	(0004864) 147.02 (0005040) 152.06	(0004865) 147.03	(0005023) 150.14	(0005045) 151.07	(0005037) 152.05
(0005070)	147.07	7599					
(0004870)	148.01	715	(0004861) 147.01				
(0004871)	148.02	7150					
(0004872)	148.03	7151					
(0004933)	148.04	730	(0004870) 148.01	(0004871) 148.02	(0004873) 148.03	(0004955) 148.22	
(0004930)	148.07	7300					
(0004933)	148.09	7301					
(0004934)	148.10	7302					
(0004875)	148.11	716	(0004858) 146.26				
(0004876)	148.12	717	(0004858) 146.26	(0004861) 147.01			
(0004879)	148.13	7[illegible]3					
(0004883)	148.15	7[illegible]					
(0004884)	148.16	7240	(0004872) 148.14				
(0004885)	148.17		(0004887) 148.19				
(0004886)	148.18	7241					
(0004887)	148.19	7242	(0004885) 148.17				
(0004890)	148.22	7230					
(0004900)	149.01	721	(0004890) 148.22				
(0004905)	149.04		(0004915) 149.12				
(0004907)	149.06	7210					
(0004908)	149.07	7211	(0004906) 149.05				
(0004909)	149.08	7212					
(0004910)	149.09	7213	(0004900) 149.07				
(0004915)	149.12	7219					
(0004930)	149.14	7303	(0004933) 148.09				
(0004939)	149.15	731	(0004929) 148.06	(0004933) 148.09	(0004935) 148.10		
(0004941)	149.17	7310					
(0004942)	149.18	7311	(0004940) 149.16				
(0004955)	149.23	7323					
(0004956)	149.24	7324	(0004954) 149.22				
(0004957)	149.25	7325					
(0004960)	149.26	7326	(0004956) 149.24				
(0004971)	149.28	733					
(0004972)	149.29		(0004981) 150.01				
(0004974)	149.31	7330					
(0004975)	149.32	7331	(0004973) 149.30				
(0004981)	150.01	7339					
(0004993)	150.04	735					
(0004997)	150.06	7350					
(0005002)	150.07	7351	(0004996) 150.05				
(0005003)	150.08	7352					
(0005015)	150.09	736	(0005002) 150.07				
(0005019)	150.12	7360	(0005016) 150.10				
(0005020)	150.13	7361	(0005027) 152.02				
(0005021)	150.14	7362	(0005030) 152.03				
(0005008)	151.01	7353	(0005005) 150.11				
(0005009)	151.02	7354	(0005005) 150.11				
(0005010)	151.03	7355					
(0005043)	151.04	741	(0005009) 151.02	(0005012) 151.03	(0005040) 152.06		
(0005046)	151.05	7410	(0005043) 151.04	(0005058) 152.09			
(0005047)	151.06	7411	(0004867) 147.04	(0005053) 152.07			
(0005048)	151.07	7412	(0005056) 152.08				
(0005026)	152.01	737	(0005016) 150.10				

```
CARD ID   PAGE/BOX   NOTE                    REFERENCES (SOURCE SEQUENCE NO AND PAGE/BOX)

(0050280) 152 03  7370
(0050330) 152 04  740          (0049810) 149 13
(0050400) 152 06  7400         (0050370) 152 05
(0050420) 152 07  7413         (0050430) 151 04
(0050560) 152 08  742          (0050370) 152 05
(0050570) 152 09  7420

CHART TITLE - NON PROCEDURAL STATEMENTS

CHART TITLE - INTRODUCTORY COMMENTS

CHART TITLE - SUBROUTINE  RTRID

(0050810) 155 01  RTRID        (0049920) 140 03-X
(0051020) 155 01  900
(0051050) 155 03  9000
(0051060) 155 04  9001         (0051040) 155 02
(0051100) 155 07  901
(0051110) 155 08  902          (0051200) 155 06
(0051240) 155 12  910          (0051210) 155 11
(0051260) 155 14  911
(0051270) 155 15  912          (0051250) 155 13
(0051330) 155 16  920          (0051210) 155 11
(0051460) 155 19  930          (0051490) 155 18
(0051530) 155 21  999          (0051490) 155 18

CHART TITLE - NON PROCEDURAL STATEMENTS

CHART TITLE - INTRODUCTORY COMMENTS

CHART TITLE - SUBROUTINE  RTPIN

(0051640) 158 01  RTPIN        (0050840) 140 08 X
(0051940) 158 01  100
(0051750) 158 02               (0051980) 158 03
(0051960) 158 03  101
(0052010) 158 05               (0052020) 158 06
(0052070) 158 06  102
(0052110) 158 09               (0052120) 158 10
(0052120) 158 10  103
(0052160) 158 11  110
(0052200) 158 12  120
(0052230) 158 14               (0052240) 158 15
(0052240) 158 15  121
(0052350) 158 17  130
(0052370) 158 19               (0052440) 158 22
(0052440) 158 22  131
(0052470) 158 23  140
(0052490) 158 25               (0052550) 159 01
(0052550) 159 01  141
(0052580) 159 02  150
(0052640) 159 04  160
(0052680) 159 05  161
(0052770) 159 07  200
(0052790) 159 09               (0052810) 159 10
(0052810) 159 10  201
(0052850) 159 11  299

CHART TITLE - NON PROCEDURAL STATEMENTS

CHART TITLE - INTRODUCTORY COMMENTS

CHART TITLE - SUBROUTINE  CG3P(XX,ZZ)

(0052950) 162.01  CG3P         (0013010) 35 13-X   (0015730) 39 31-X   (0016760) 45 02-X   (0018180) 51.08-X   (0019790) 54 06-X
                               (0019590) 56.06-X   (0024440) 71 11-X   (0025810) 76.06 X   (0032430) 111.18-X   (0033550) 113.05-X
                               (0037930) 122.06-X
(0053150) 162 01  90
(0053160) 162.02               (0053170) 162.04
(0053170) 162 03  40
(0053200) 162 06               (0053210) 162 08
```

CARD ID	PAGE/BOX	NAME	REFERENCES (SOURCE SEQUENCE NO. AND PAGE/BOX)				
(005321)	162.07 10						
(005345)	162.15 21		(005333) 162.14				
(005347)	162.16 25		(005345) 162.15				
(005346)	162.17 29						
(005335)	163.01 20		(005333) 162.14				
(005336)	163.02 33						
(005341)	163.03 32		(005335) 163.01				
(005350)	163.04 24		(005340) 162.17	(005353) 163.06	(005356) 163.08	(005361) 164.02	
(005353)	163.05 22		(005345) 162.15				
(005355)	163.07 23		(005353) 163.05				
(005359)	164.01 26		(005347) 162.16				
(005362)	164.03 27						
(005363)	164.04 28		(005348) 162.17	(005351) 163.05			
(005366)	164.05 30		(005330) 163.02 (005362) 164.03	(005342) 163.03	(005351) 163.05	(005356) 163.08	(005361) 164.02

CHART TITLE - NON-PROCEDURAL STATEMENTS

CHART TITLE - INTRODUCTORY COMMENTS

CHART TITLE - SUBROUTINE SS(SFCI)

(005376)	167.01	55	(000312) 9.17-X (001849) 51.21-X (003622) 116.02-X	(000362) 21.12-X (001906) 56.08-X	(001813) 51.05-X (004005) 59.02-X	(001820) 51.10-X (002101) 63.05-X	(001830) 51.16-X (003516) 111.14-X
(005392)	167.01	90					
(005395)	167.03	91					
(005400)	167.05	92					
(005404)	167.06	93					
(005411)	167.09	94					
(005413)	167.10	93					

CHART TITLE - NON-PROCEDURAL STATEMENTS

CHART TITLE - INTRODUCTORY COMMENTS

CHART TITLE - SUBROUTINE PRTB

(005424)	170.01	PRTB	(000350) 10.10 X		
(005454)	170.01	100			
(005461)	170.05	501			
(005464)	170.06	505	(005460) 170.04		
(005468)	170.07	510	(005463) 170.05		
(005470)	170.11		(005480) 170.14		
(005480)	170.14	105			
(005485)	170.16	106			
(005486)	170.17		(005488) 170.20		
(005488)	170.20	107			
(005491)	170.21	109	(005484) 170.15		
(005498)	170.23		(005500) 170.26		
(005500)	170.26	111			
(005508)	171.01	1200	(005505) 170.20		
(005516)	171.04		(005519) 171.08		
(005519)	171.08	121			
(005526)	171.12		(005529) 171.15		
(005529)	171.16	122			
(005536)	171.18	130	(005533) 171.17		
(005537)	171.19	142			
(005542)	172.01	143	(005536) 171.18		
(005545)	172.02	139	(005540) 171.19		
(005546)	172.03		(005548) 172.06		
(005548)	172.06	133			
(005554)	172.09		(005556) 172.12		
(005556)	172.12	135			
(005565)	172.15	199	(005505) 170.20	(005533) 171.17	

CHART TITLE - NON-PROCEDURAL STATEMENTS

CHART TITLE - INTRODUCTORY COMMENTS

CHART TITLE - SUBROUTINE PRTC

```
CARD ID   PAGE/BOX   NAME                    REFERENCES (SOURCE SEQUENCE NO AND PAGE/BOX)

(0005761) 175 01  FRTC        (0000429) 11 19 X
(0005607) 175 01  300
(0005611) 175 02  301
(0005619) 175 06  501
(0005622) 175 07  505         (0005618) 175 05
(0005628) 175 08  510         (0005611) 175 06
(0005634) 175.10  310
(0005639) 175.12              (0005641) 175 15
(0005641) 175 15  313
(0005643) 175 17              (0005645) 175 20
(0005651) 175 20  314
(0005649) 175 25              (0005651) 175 28
(0005651) 175 28  315
(0005655) 175 .   320
(0005658) 176 01              (0005661) 176 04
(0005661) 176 04  322
(0005665) 176 05  330
(0005670) 176 07              (0005672) 176 10
(0005672) 176.10  333
(0005682) 176 13  340         (0005676) 176 12
(0005683) 176.14  341
(0005688) 176 16              (0005690) 176 19
(0005690) 176.19  345
(0005694) 176 22              (0005698) 176 25
(0005696) 176 25  348
(0005701) 176 26  399         (0005676) 176 12    (0005682) 176 13

CHART TITLE - NON PROCEDURAL STATEMENTS


CHART TITLE - INTRODUCTORY COMMENTS


CHART TITLE - SUBROUTINE  PRTEB

(0005711) 179 01  PRTEB       (0002163) 64 06 X   (0002200) 65 08 X   (0002347) 66 10 X   (0002552) 85 04 X   (0002655) 85 09 X
                              (0003170) 92 03 X
(0005733) 179 04  104         (0005731) 179 03
(0005734) 179.05              (0005736) 179 07
(0005736) 179.07  106
(0005740) 179 08  110         (0005735) 179 06
(0005740) 179.09  111         (0005740) 179 08    (0005762) 180 03
(0005768) 180.01  125         (0005740) 179 08
(0005765) 180.04  120         (0005762) 180 03
(0005770) 180.07  130         (0005756) 179 13    (0005762) 180 03
(0005785) 180.12  133         (0005784) 180 11
(0005789) 180 14              (0005791) 180 17
(0005791) 180.17  139
(0005794) 180 18  140
(0005795) 180 19  141
(0005798) 180 21              (0005800) 180 24
(0005800) 180.24  149
(0005803) 180.25  193         (0005731) 179 03    (0005737) 179 07    (0005784) 180 11    (0005794) 180 18

CHART TITLE - NON PROCEDURAL STATEMENTS
```

LOCATION		DIAGNOSTIC
CARD ID	PAGE/ERR	
(0000017)	2 02	UNRECOGNIZED SYNTAX
(0000250)	2 06	UNRECOGNIZED SYNTAX
(0005462)	13 13	UNDEFINED - WRITING EXTERNAL REFERENCE
(0005464)	13 15	UNDEFINED - WRITING EXTERNAL REFERENCE
(0005466)	13 17	UNDEFINED - WRITING EXTERNAL REFERENCE
(0005468)	13 19	UNDEFINED - WRITING EXTERNAL REFERENCE
(0005501)	13 21	UNDEFINED - WRITING EXTERNAL REFERENCE

PROGRAM FLOW CHARTS

CHART TITLE - INTRODUCTORY COMMENTS

```
*****************  ***********************************************************

      *****PROGRAM OLAY10*****
  ***PROGRAM FOR FIFTH OVERLAY OF WING/EMPENNAGE MODULE***
      STRUCTURAL SYNTHESIS/WEIGHT ANALYSIS - METALLIC DESIGN NO 2

***********************************************************************************
```

CHART TITLE - PROCEDURES

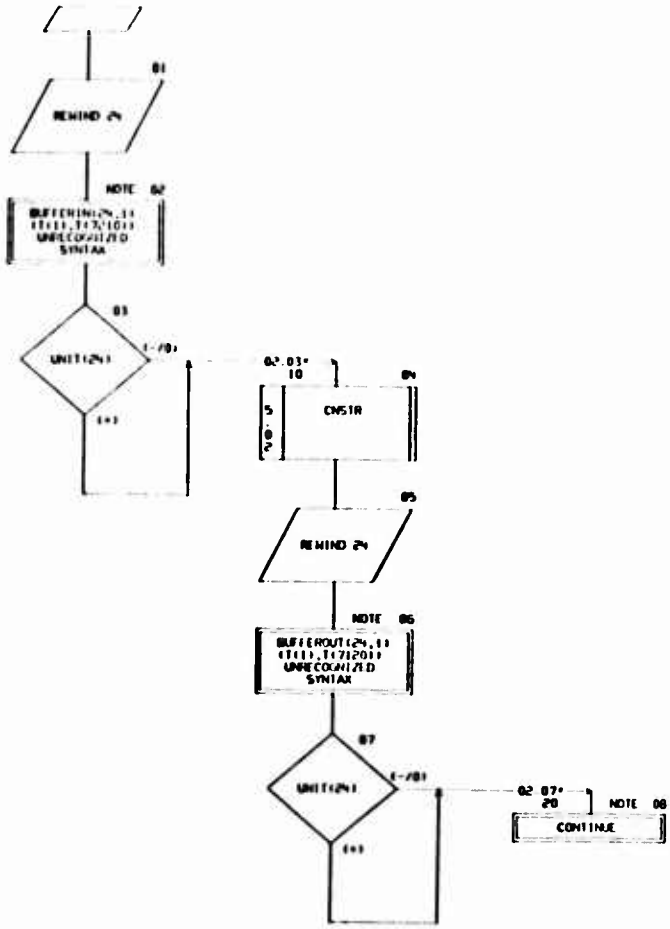

CHART TITLE - NON-PROCEDURAL STATEMENTS

```
PROGRAM OLAY10
COMMON T(71,20)
COMMON /MISC/ XMISC(100)
```

CHART TITLE - INTRODUCTORY COMMENTS

```
*****************************************************************

      *****SUBROUTINE CNSTR*****
   ***TORQUE-BOX SYNTHESIS/WEIGHT ANALYSIS CONTROL***

*****************************************************************
```

CHART TITLE - SUBROUTINE CNSTR

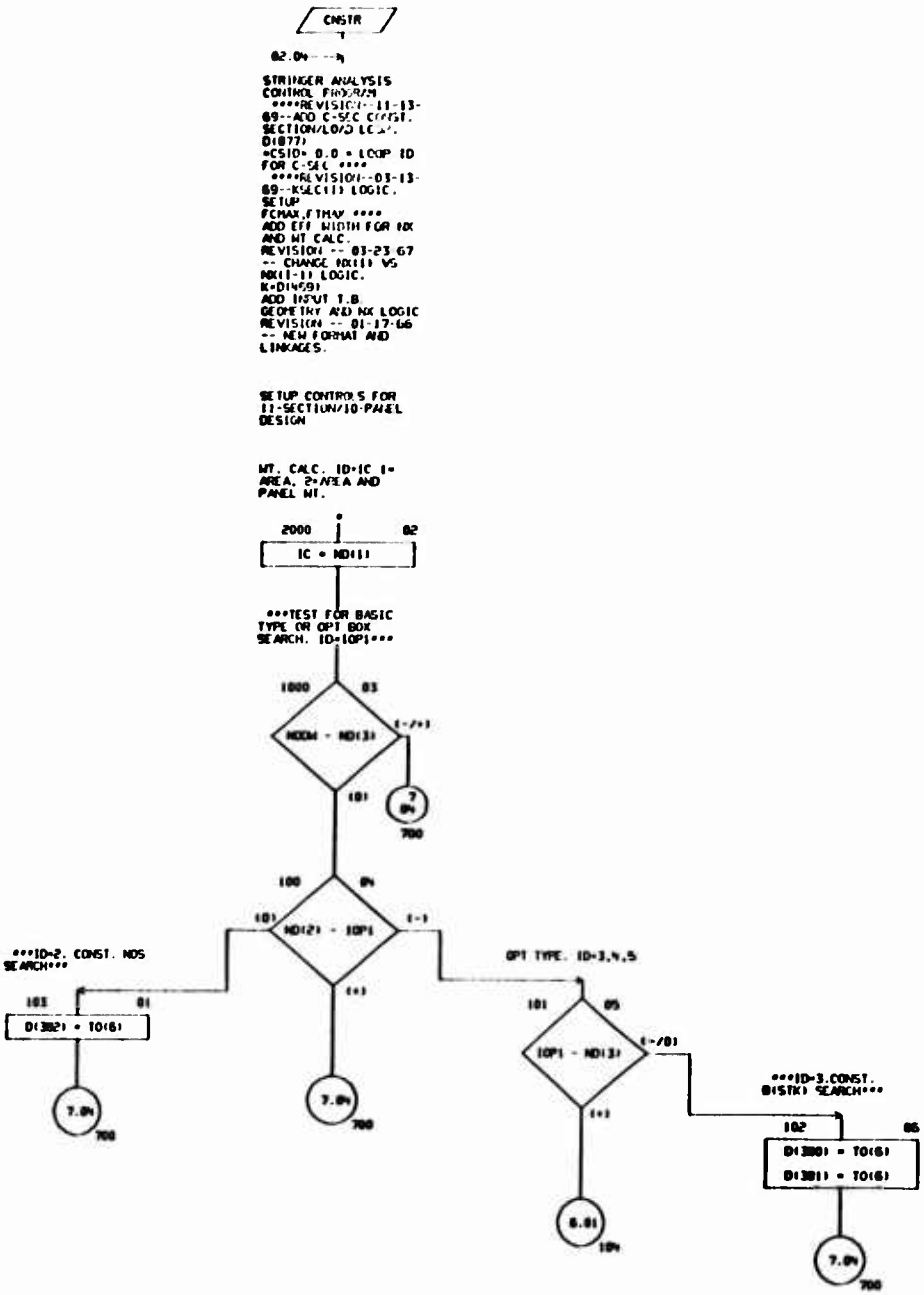

CHART TITLE - SUBROUTINE CNSTR

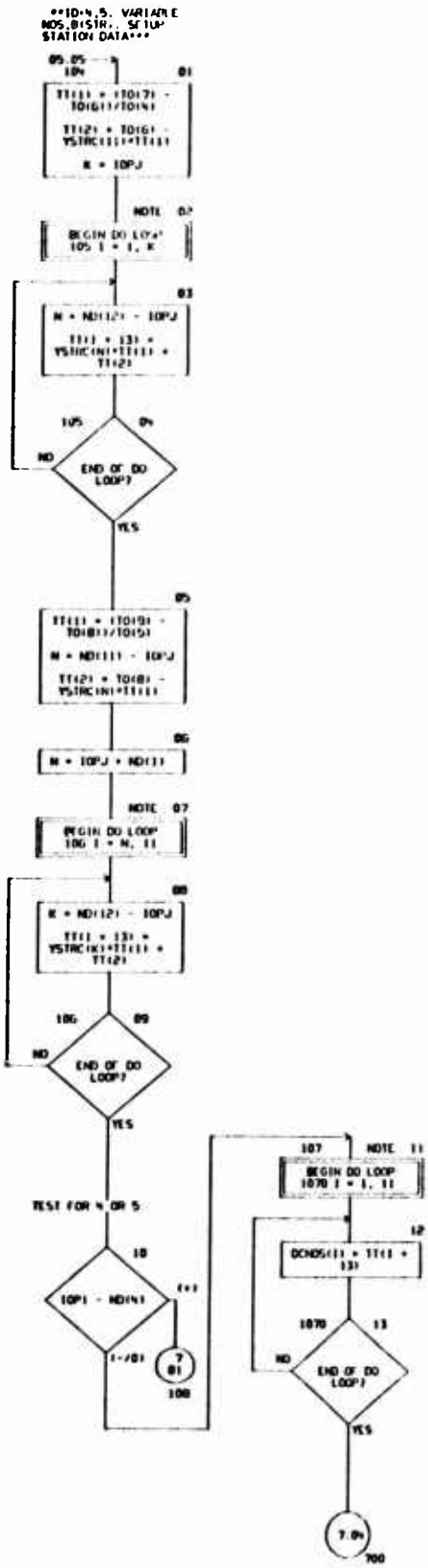

CHART TITLE - SUBROUTINE CNSTR

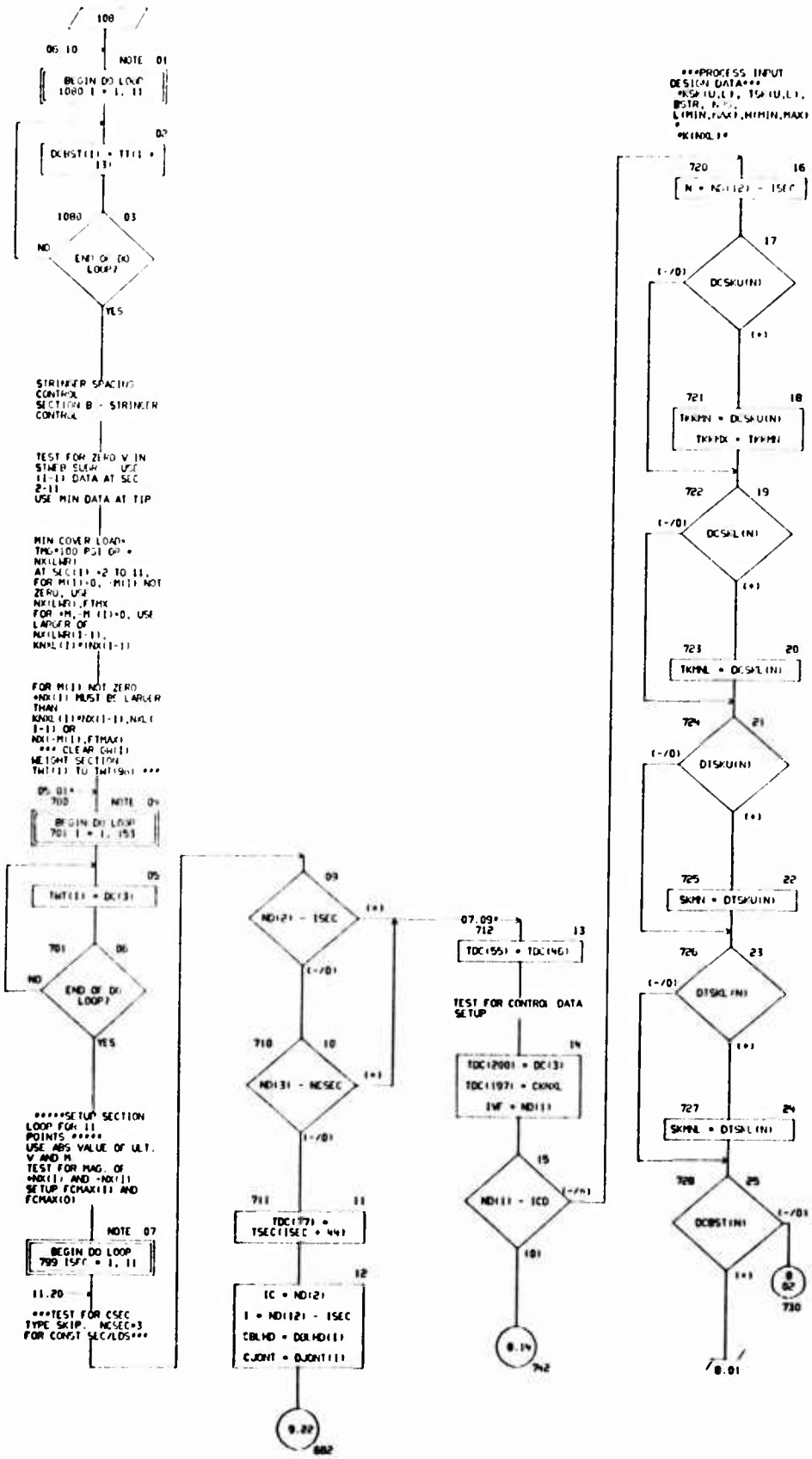

CHART TITLE - SUBROUTINE CHSTR

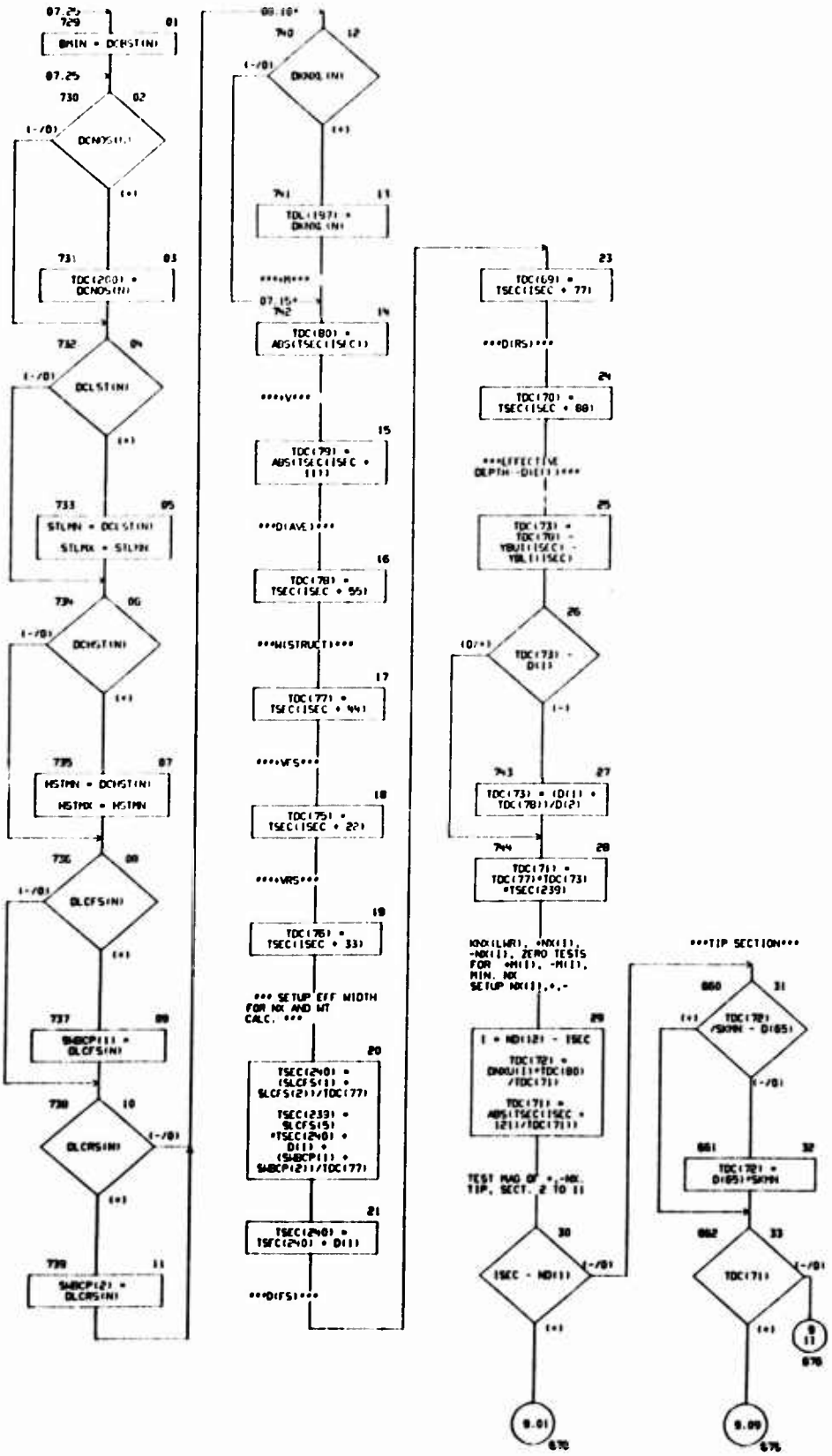

CHART TITLE - SUBROUTINE CNSTR

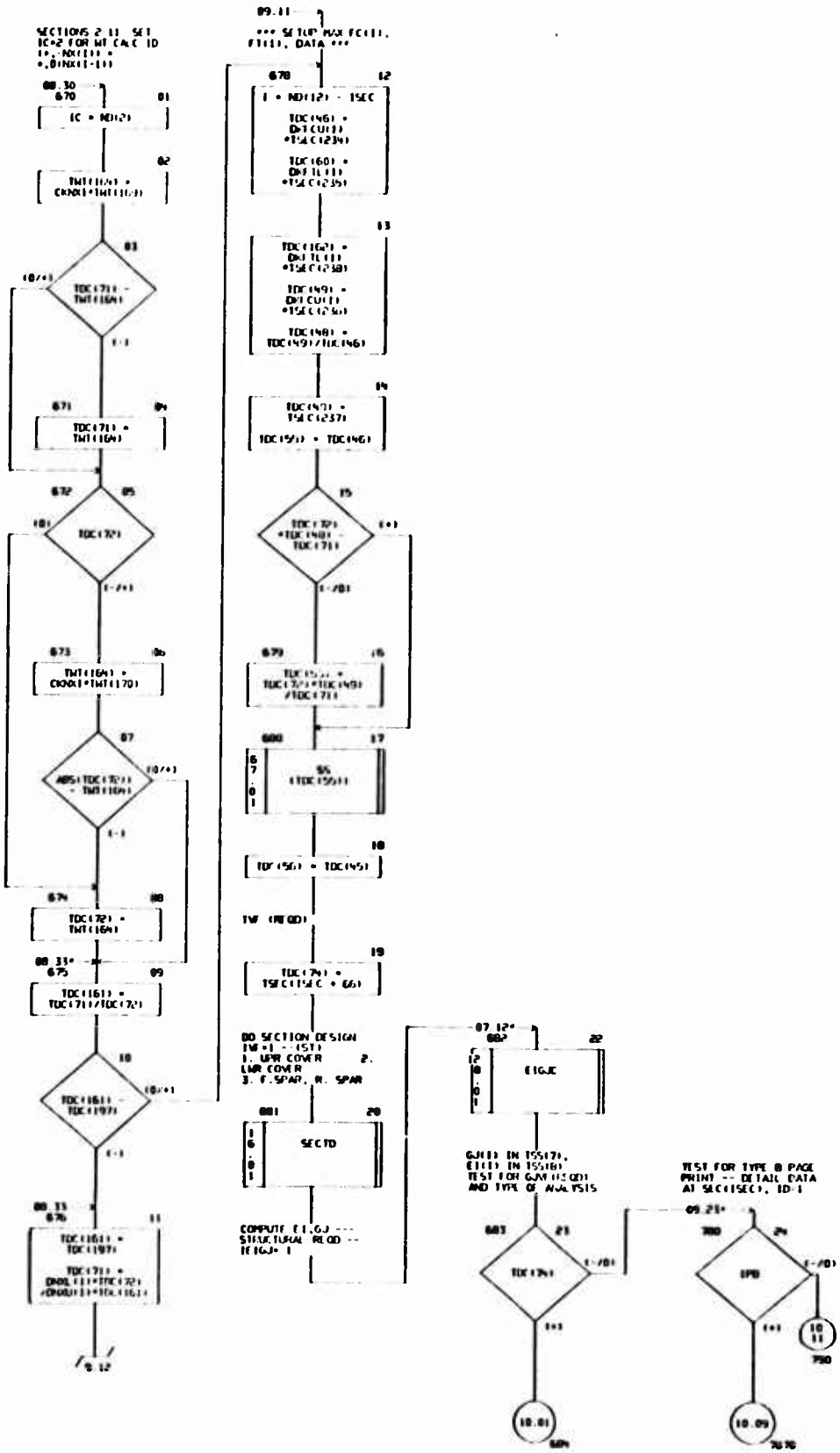

CHART TITLE - SUBROUTINE CNSTR

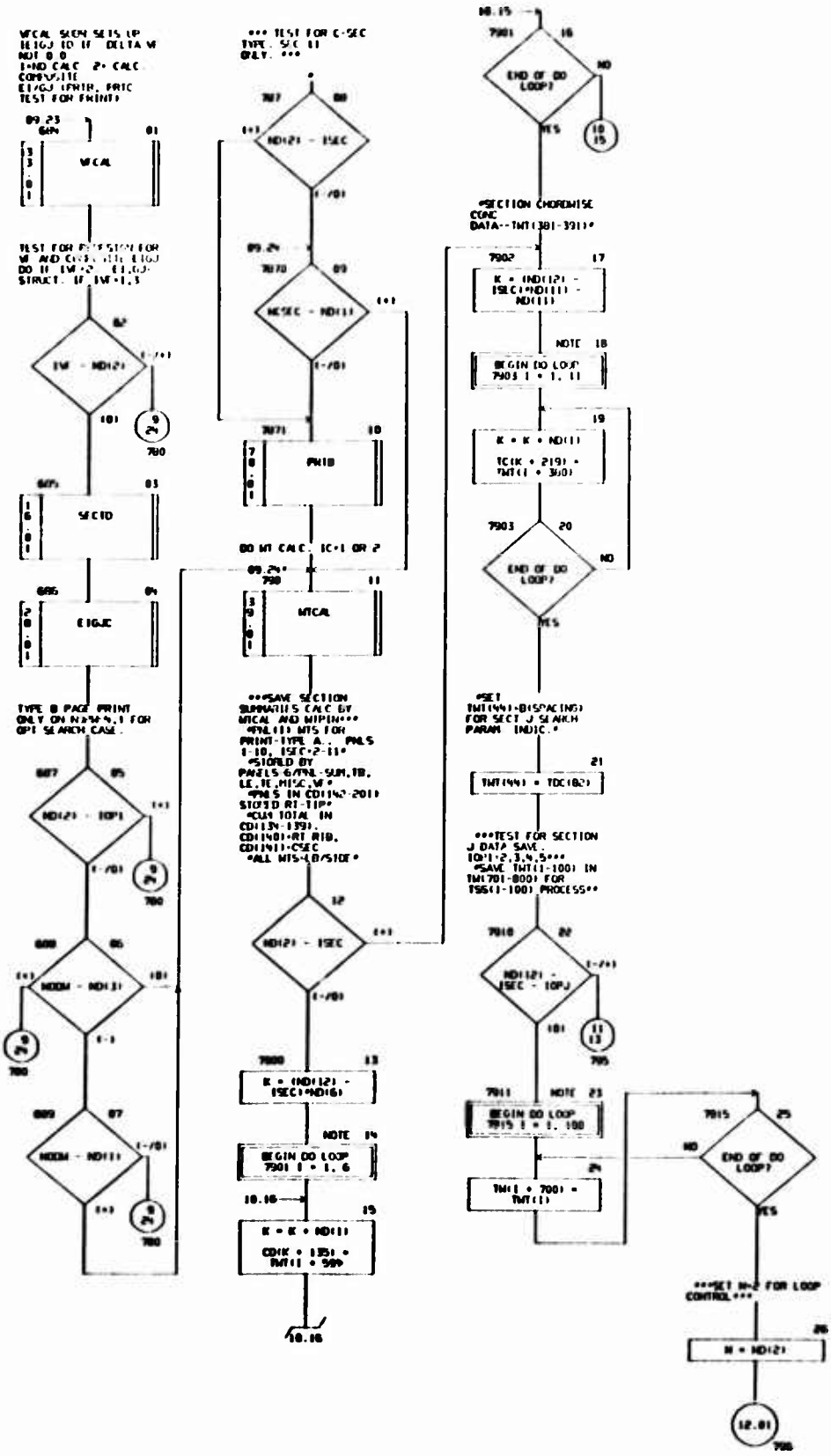

CHART TITLE - SUBROUTINE CNSTR

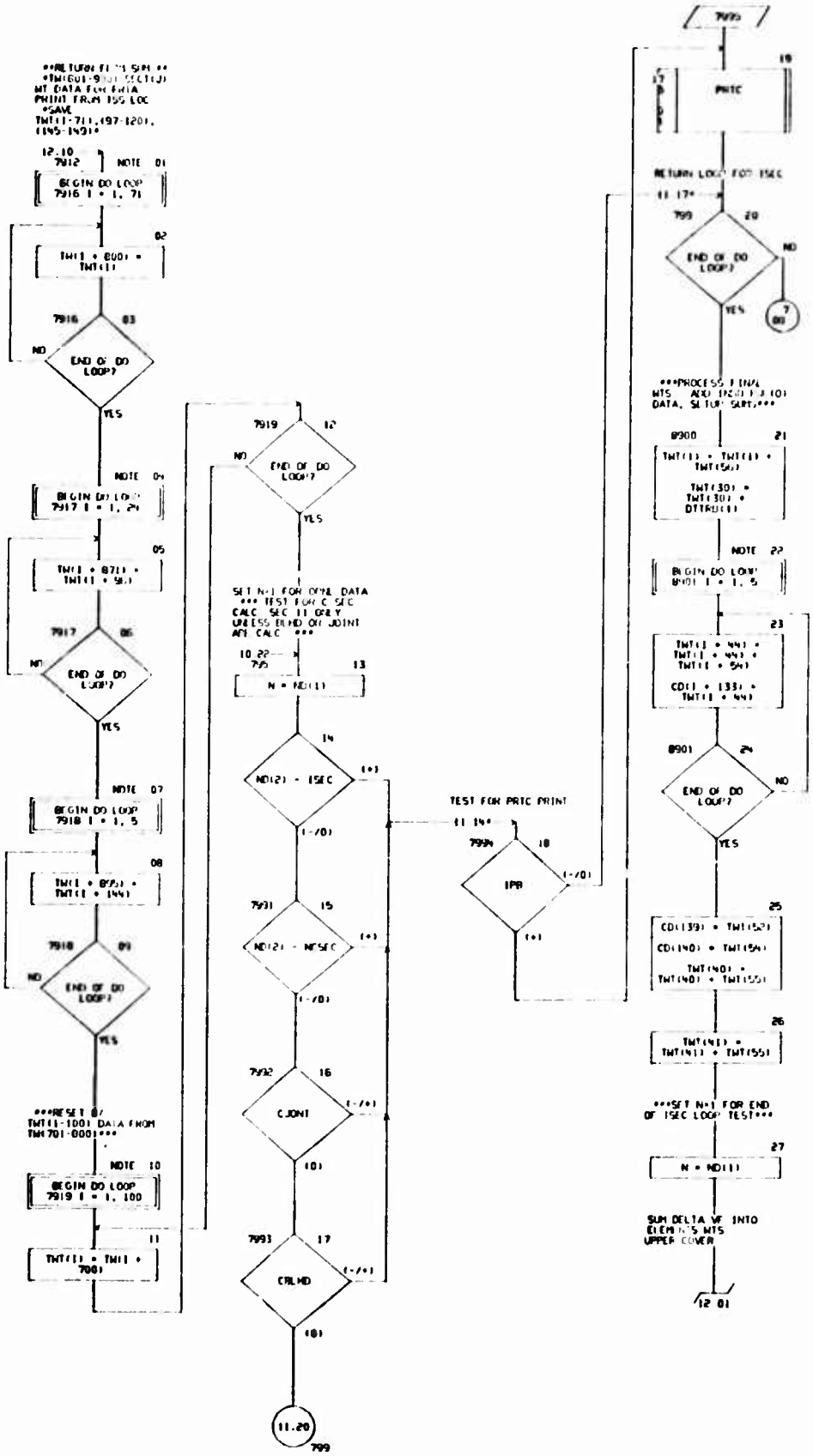

CHART TITLE - SUBROUTINE CNSTR

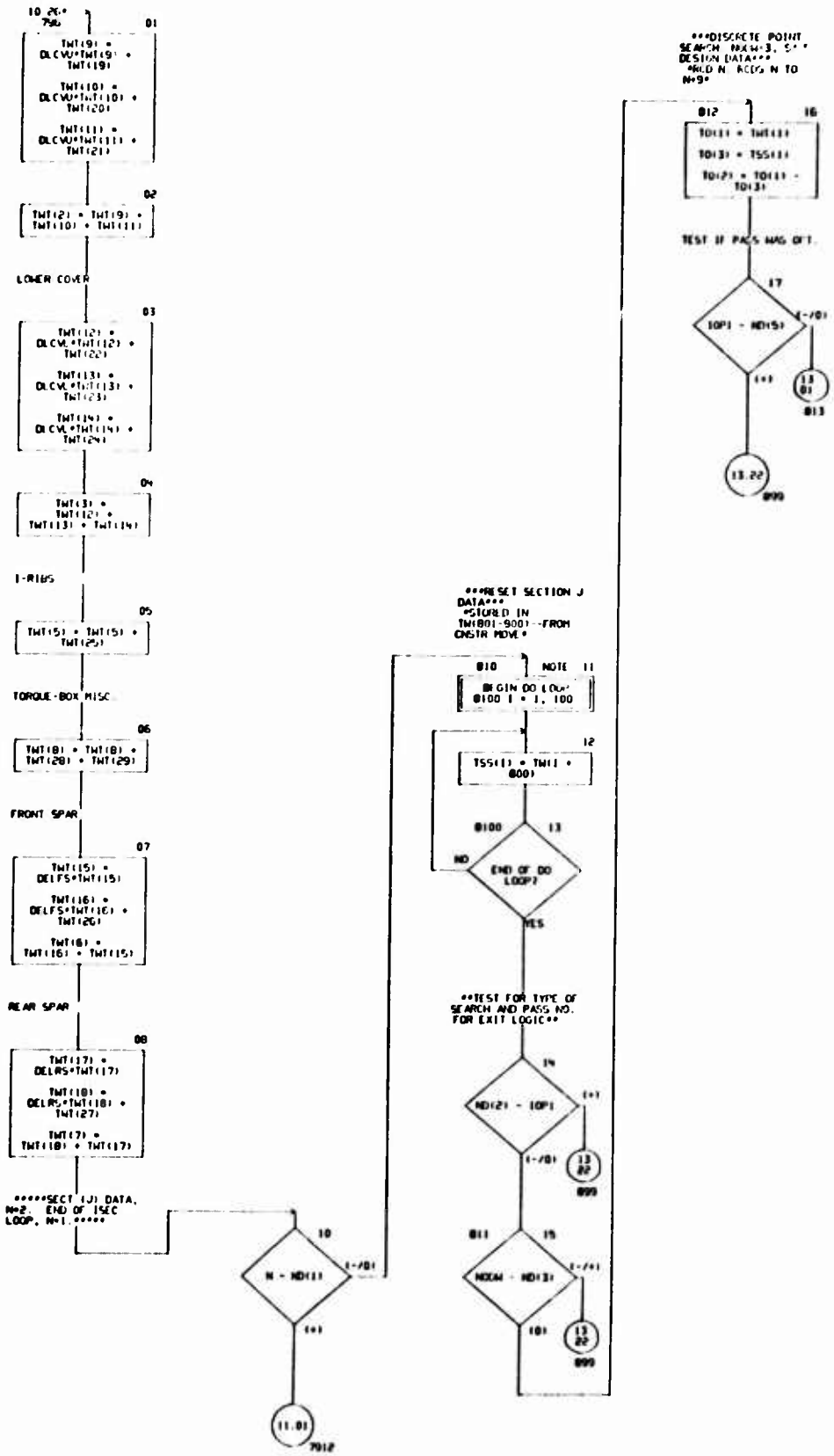

CHART TITLE - SUBROUTINE CNSTR

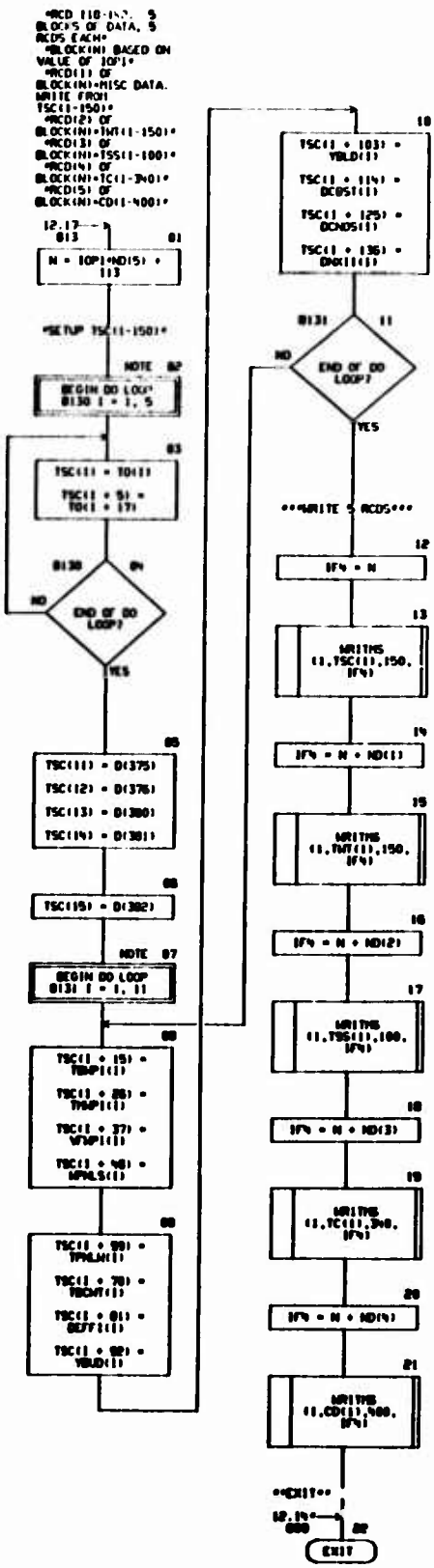

CHART TITLE - NON PROCEDURAL STATEMENTS

```
COMMON T(2000),D(2000),CD(2000),ND(1000),TW(990)
DIMENSION DC(1001),TDC(2001),TSC(4201),TSS(1001),TWT(400),TSEC(300),
TC(3401),TO(401),TT(24),DEL(30),
YSTRC(11),DJONT(11),DDLHD(11),DDAPT(5),
DXFCU(11),DXFTL(11),DNOU(11),DNOL(11),
SLCFS(5),SWBCP(2),
DTTRB(2),
YBUD(11),YBLD(11),YBUI(11),YBLI(11),DEFF(11),DNX(11),
TBWP(11),TWWP(11),YFWP(11),WCLS(11),TTELW(11),TDCWT(11),
DCSKU(11),DCSKL(11),DTSKU(11),DTSKL(11),DCBST(11),DCNOS(11),
DCLST(11),DCHST(11),DLCFS(11),DLCRS(11),DNOL(11)
EQUIVALENCE (DC(1),D(1401)),(TDC(1),T(1351)),(TSC(1),D(1541)),
(TSS(1),T(1501)),(TWT(1),CD(1101)),(TSEC(1),CD(1501)),
(TC(1),T(1801)),(TO(1),T(1920)),(TT(1),T(1317)),
(YSTRC(1),TSEC(166)),
(DBKPT(1),D(1751)),(DL(1),TWT(251)),(DTPVT,D(200)),
(DLCVU,DEL(1)),(DLCVL,DEL(4)),(DELFS,DEL(13)),(DELRS,DEL(17)),
(E,ND(29)),(K,ND(30)),(N,ND(31)),(IPA,ND(23)),(IPU,ND(24)),
(IOPI,ND(7)),(IOPJ,ND(8)),(IOPI,ND(82)),
(IC,ND(48)),(ICD,ND(49)),(IVF,ND(51)),
(ISEC,ND(55)),(NODW,ND(56)),(NCSEC,ND(60)),(IFN,ND(93))
EQUIVALENCE (DXXI,D(7)),(SKMN,D(370)),(DXXL,D(392)),
(SWBCP(1),D(423)),(DDLHD(1),D(650)),(DJONT(1),D(66)),
(DNOU(1),D(93)),(DNOL(1),D(942)),(DXFCU(1),D(639)),
(DXFTL(1),D(1008)),(DOPTP,D(1399)),(SLCFS(1),D(1470)),
(DDLHD,TWT(200)),(CJONT,TWT(20)),
(YBUI(1),TSEC(133)),(YBLI(1),TSEC(108)),(DNX(1),T(723)),
(YBUD(1),T(678)),(YBLD(1),T(690)),(DEFF(1),T(800)),
(WPNLS(1),T(645)),(TPNLW(1),T(656)),(TBCWT(1),T(789)),
(TBWP(1),T(745)),(TWWP(1),T(778)),(YFWP(1),T(756))
EQUIVALENCE (DCSKU(1),D(721)),(DCSKL(1),D(732)),
(DTSKU(1),D(743)),(DTSKL(1),D(754)),(DCBST(1),D(765)),
(DCNOS(1),D(776)),(DCLST(1),D(787)),(DCHST(1),D(798)),
(DLCFS(1),D(809)),(DLCRS(1),D(820)),(DXXL(1),D(831)),
(TMIN,TDC(64)),(TMAX,TDC(65)),(TKMN,D(395)),(SKMN,D(394)),
(DMIN,D(380)),(STLMN,D(375)),(STLMX,D(376)),
(DTTRB(1),T(666)),
(HSTMN,D(377)),(HSTMX,D(378))
```

CHART TITLE - INTRODUCTORY COMMENTS

```
*************************************************************

      *****SUBROUTINE SECTD*****
   ***TORQUE-BOX SECTION SYNTHESIS - SEARCH LEVEL 1 CONTROL***

*************************************************************
```

CHART TITLE - SUBROUTINE SECTD

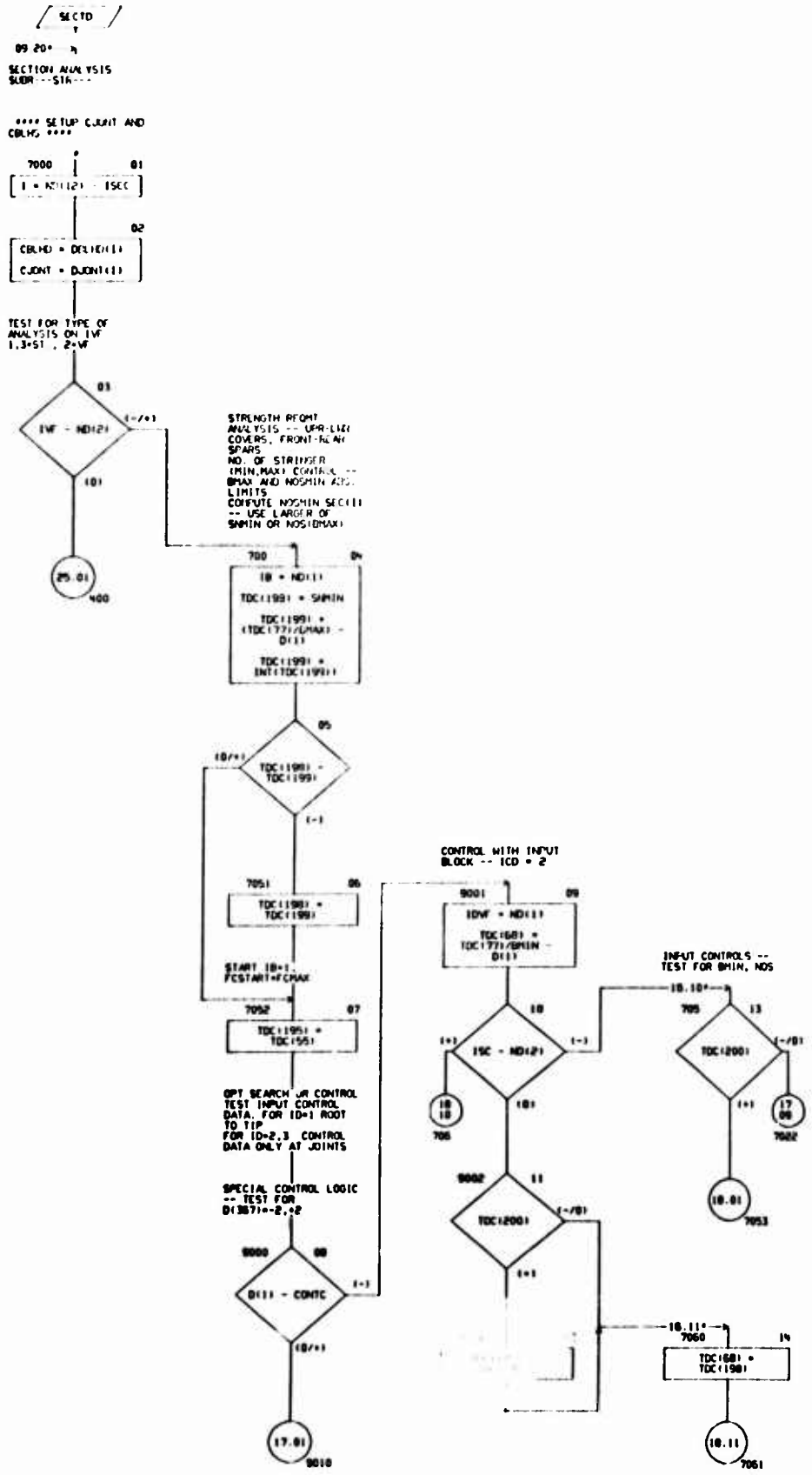

CHART TITLE - SUBROUTINE SECID

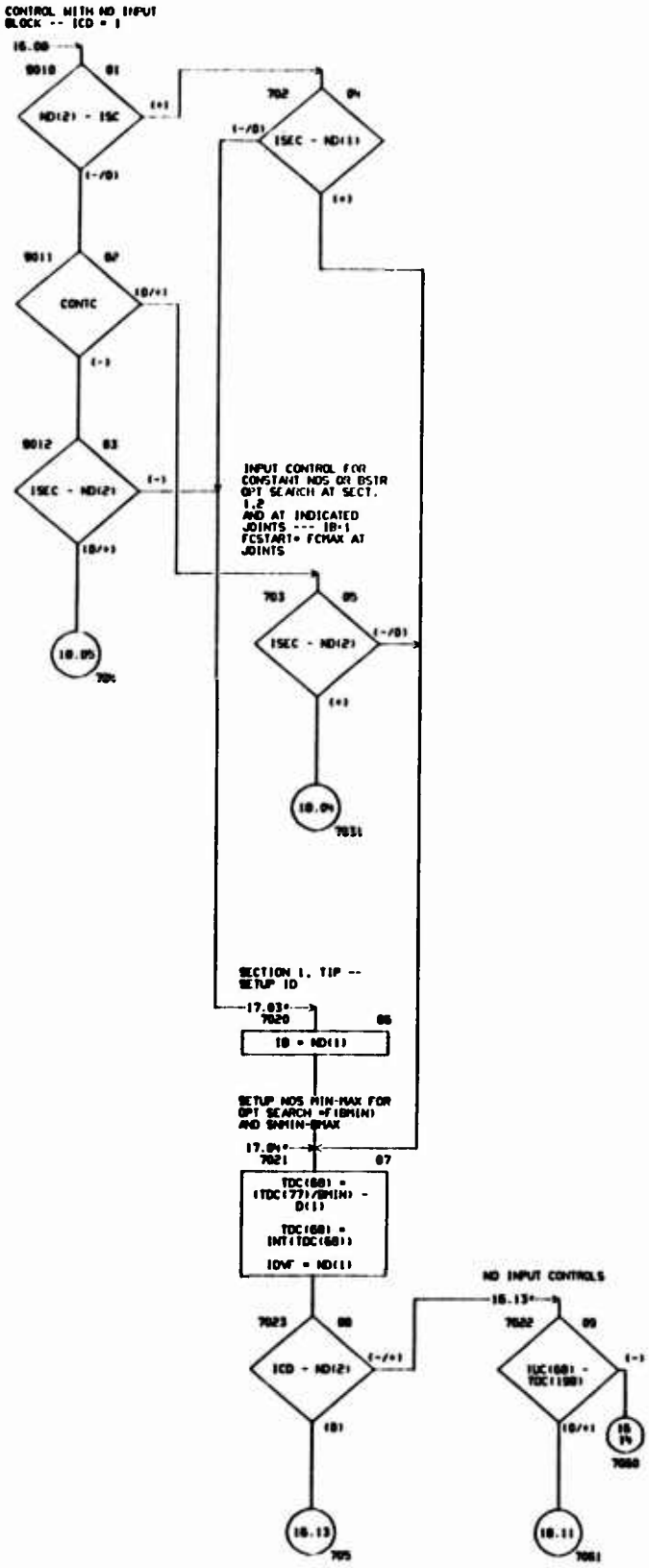

CHART TITLE - SUBROUTINE SECTD

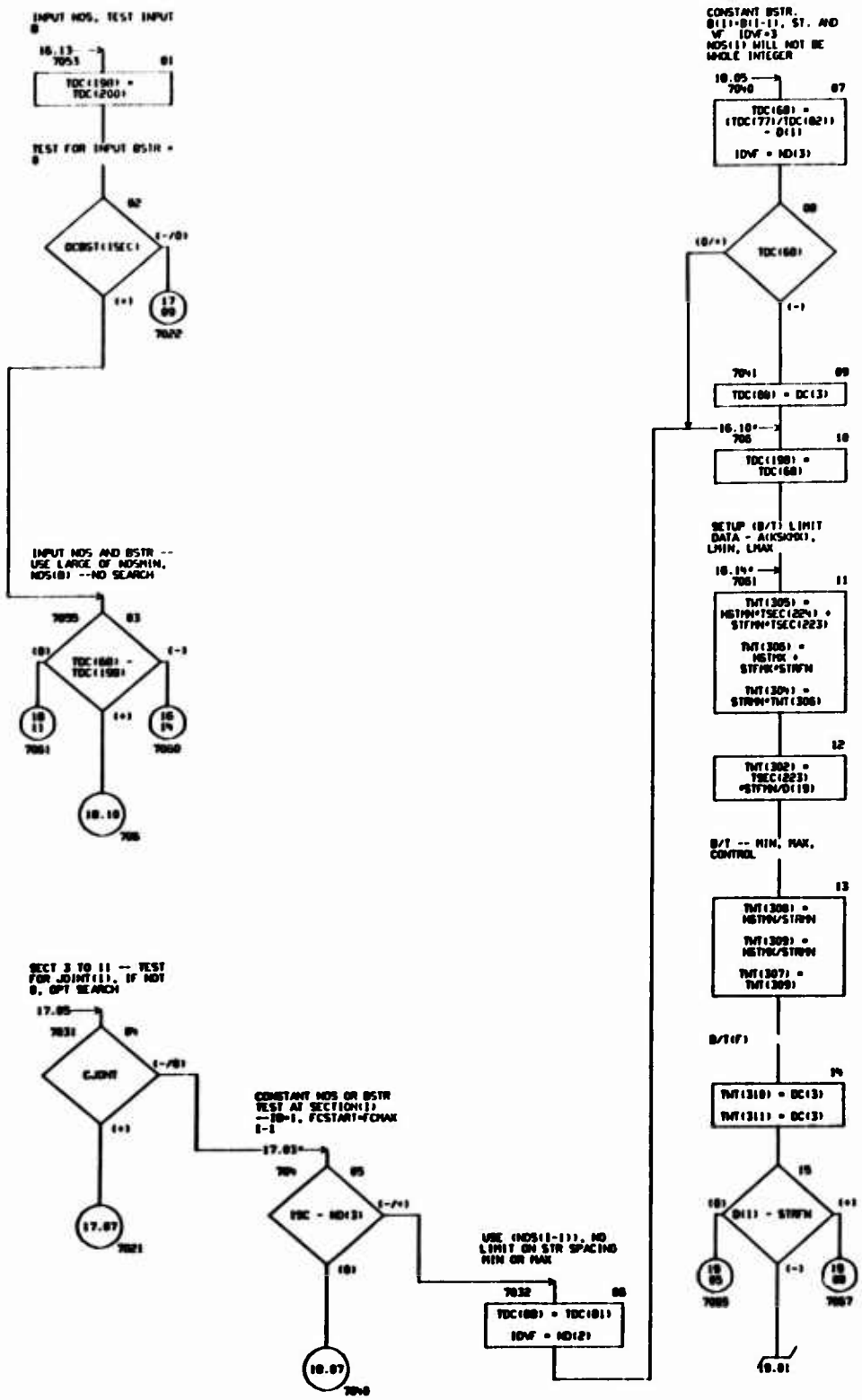

CHART TITLE - SUBROUTINE SECTD

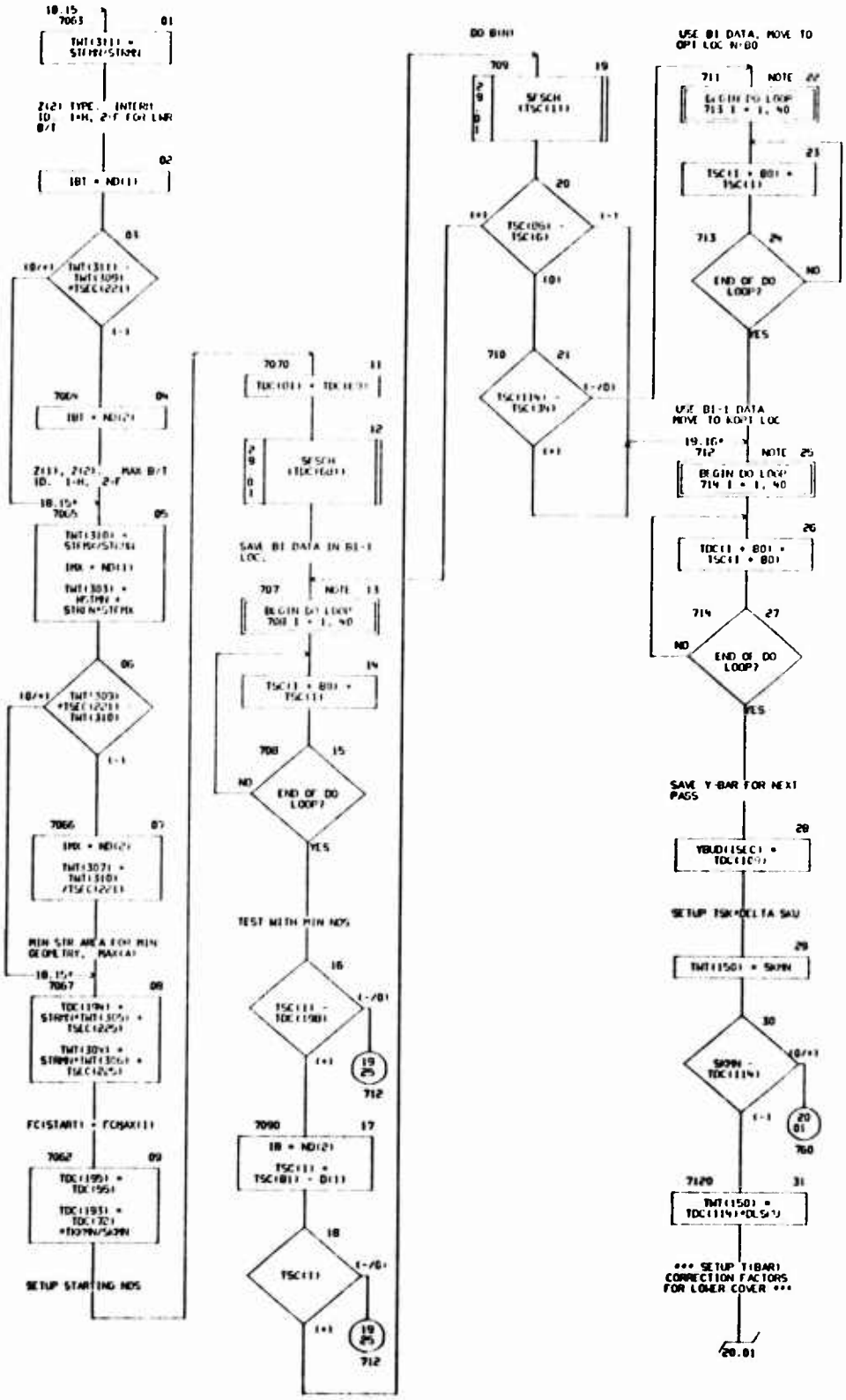

CHART TITLE - SUBROUTINE SECTD

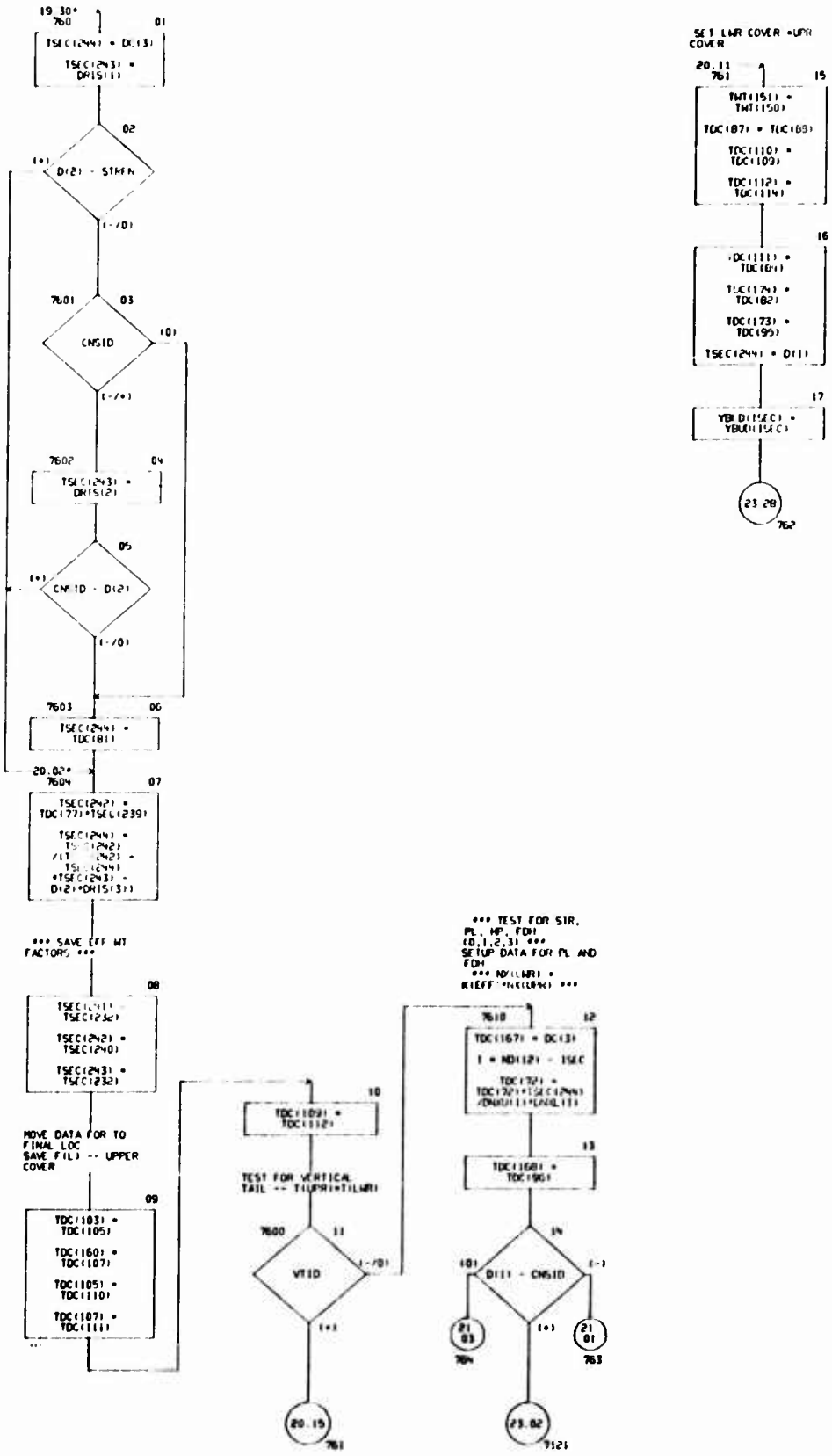

CHART TITLE - SUBROUTINE SECID

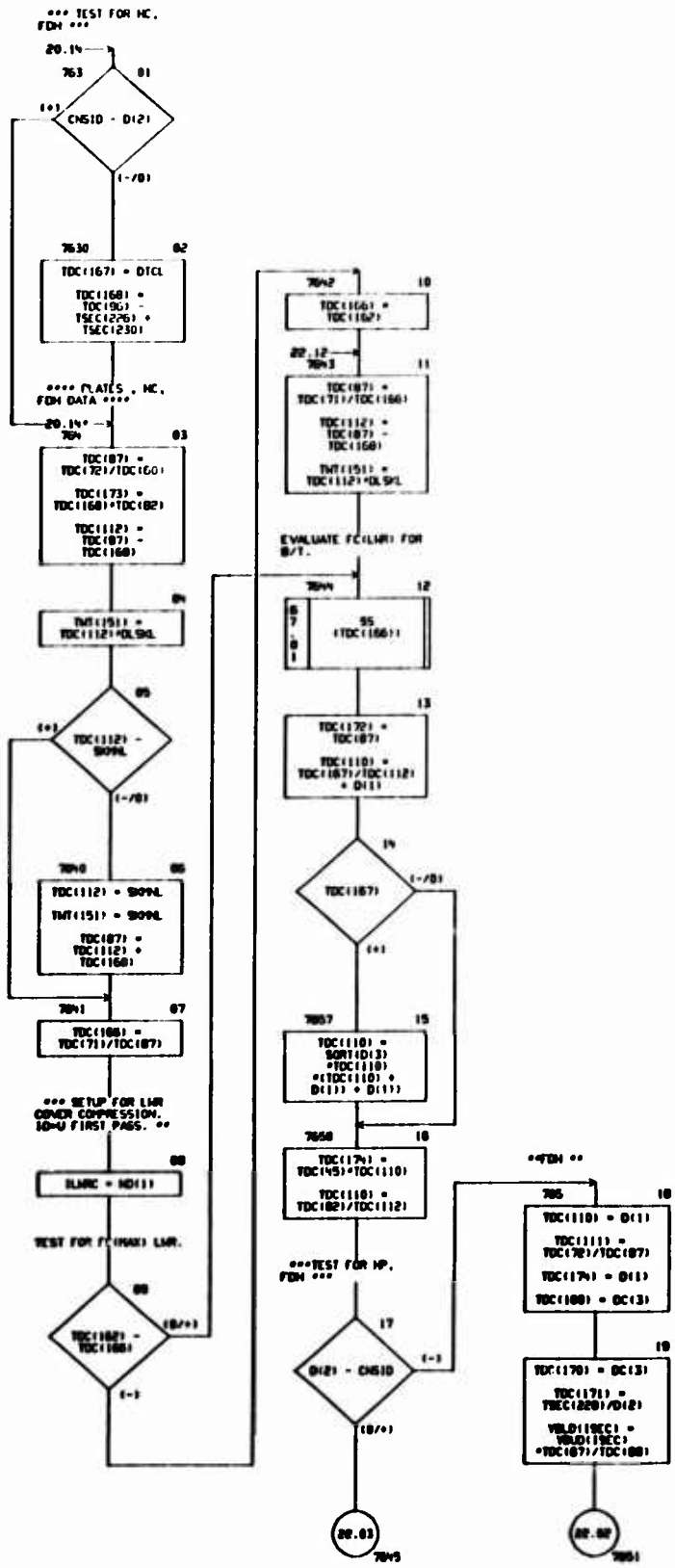

CHART TITLE - SUBROUTINE SECTO

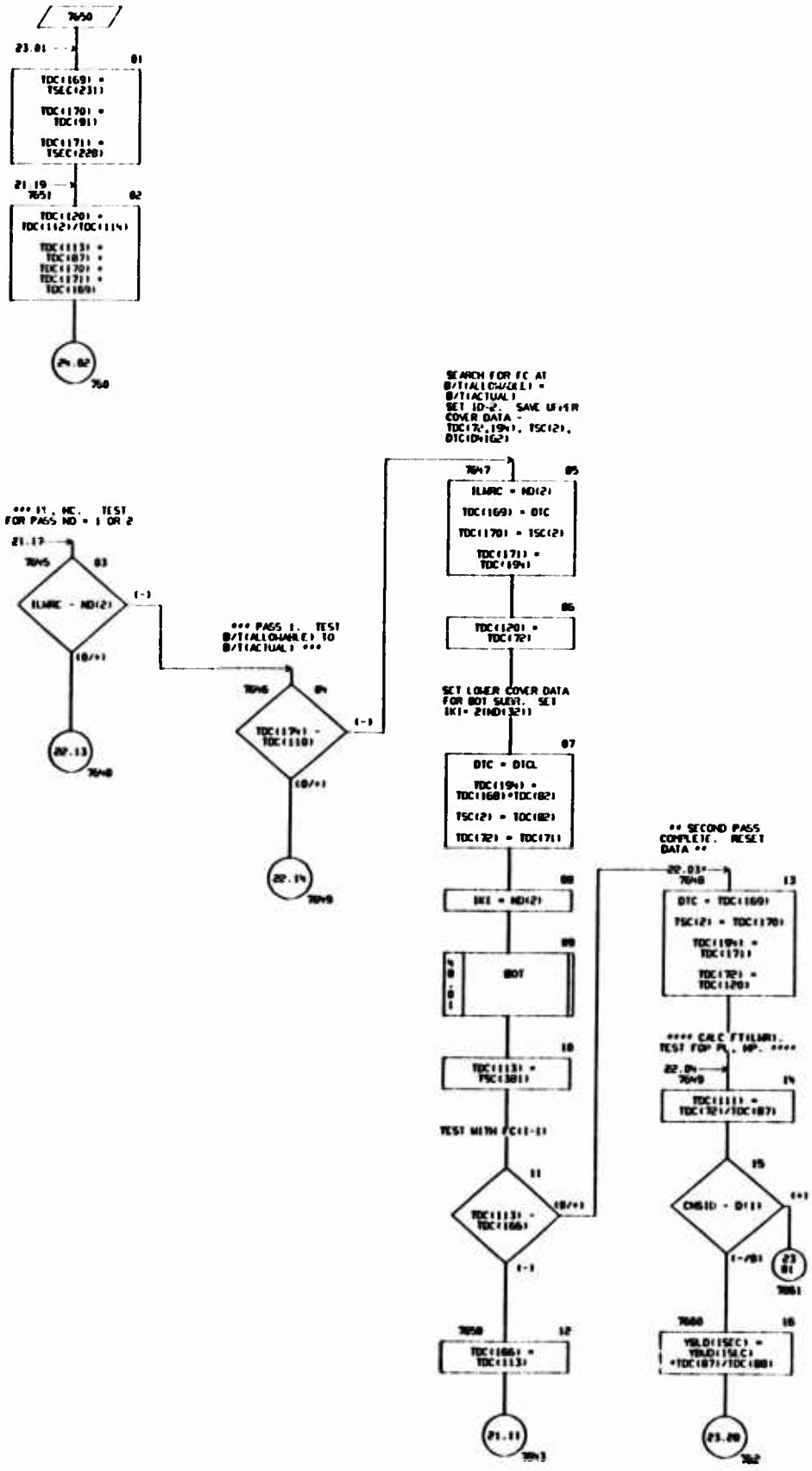

CHART TITLE - SUBROUTINE SETID

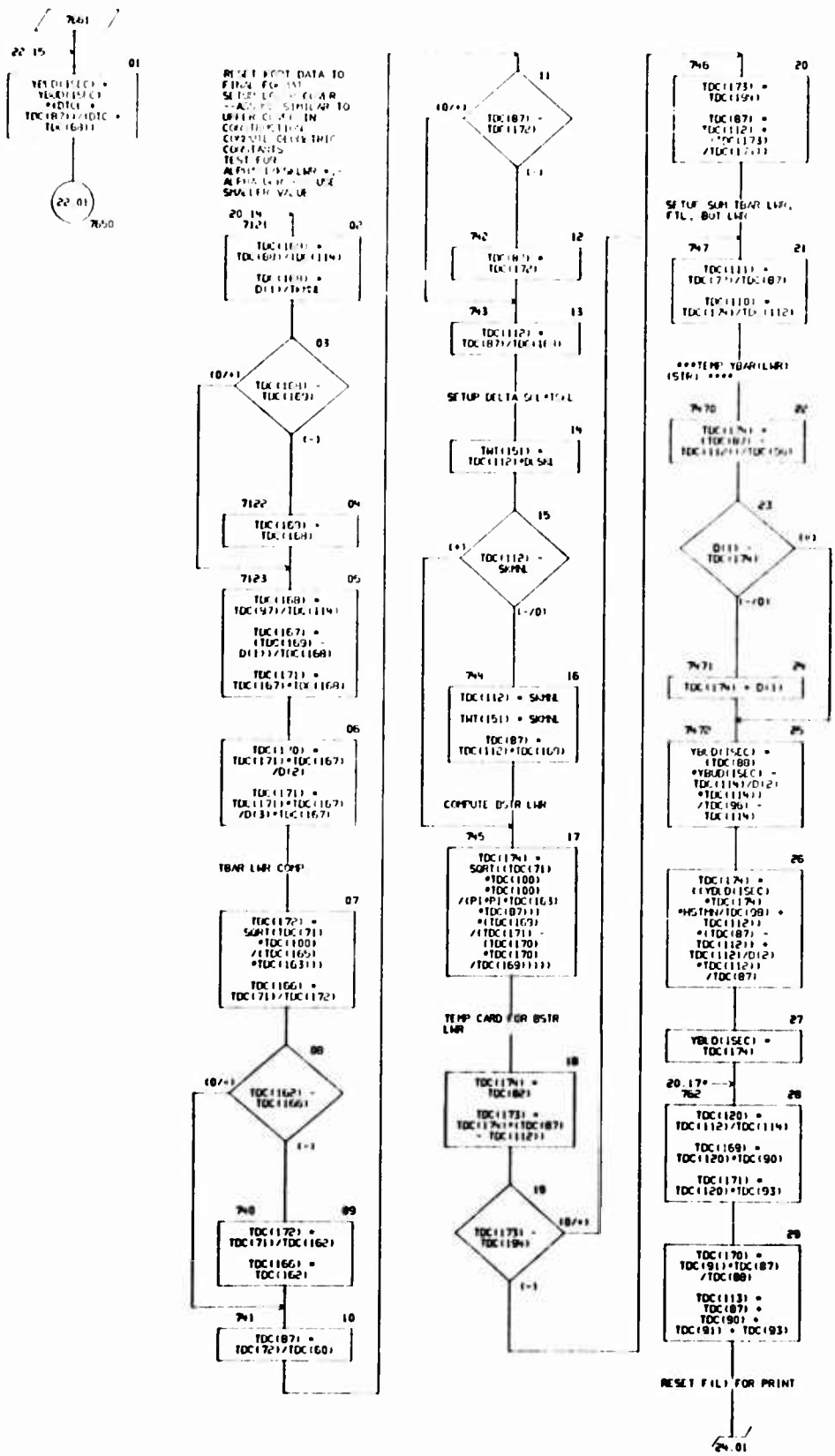

CHART TITLE - SWEEP/TIME SECTO

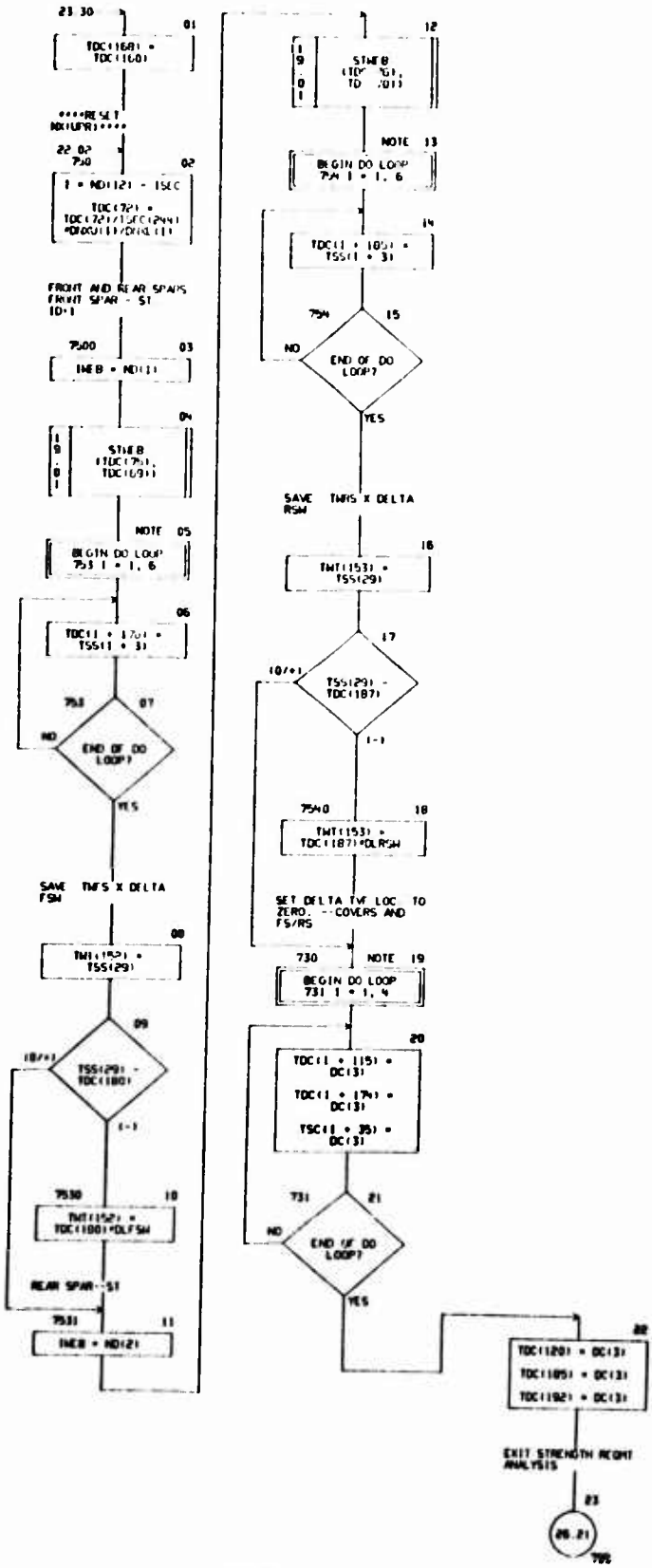

CHART TITLE - SUBROUTINE SECID

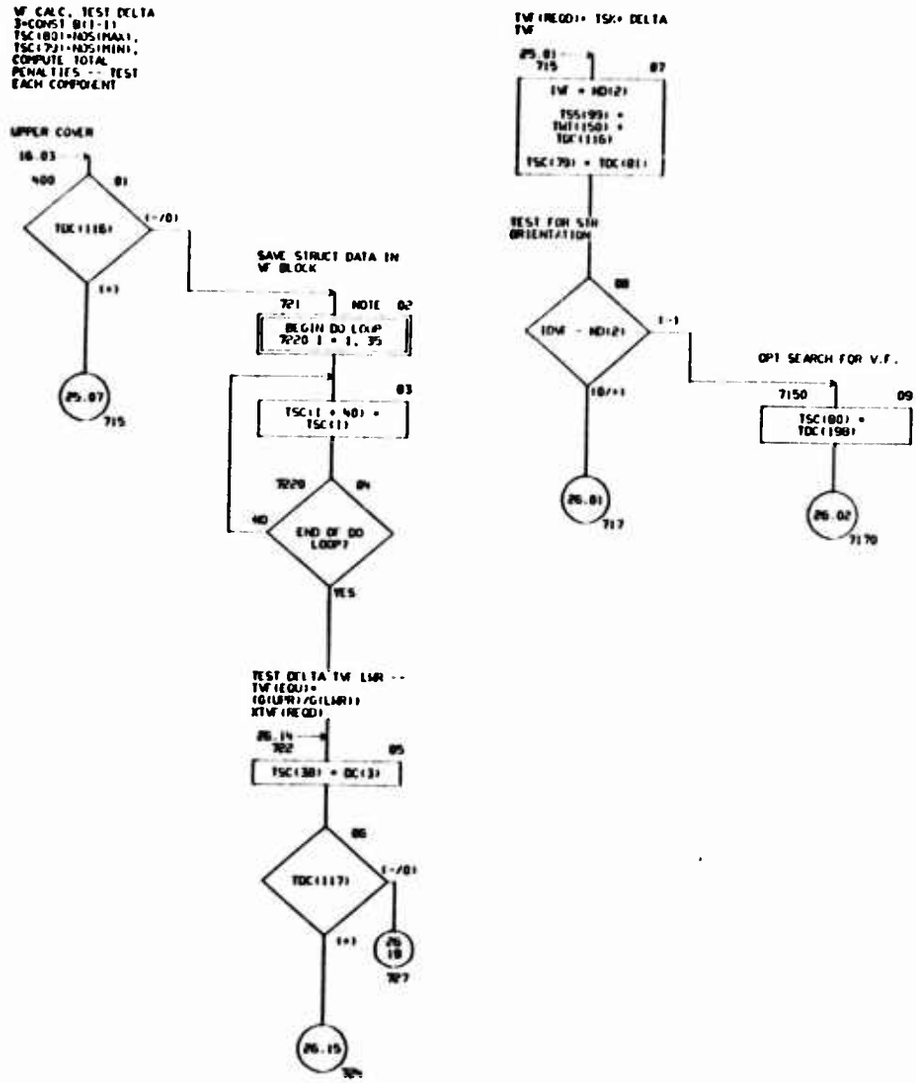

CHART TITLE - SUBROUTINE SECTD

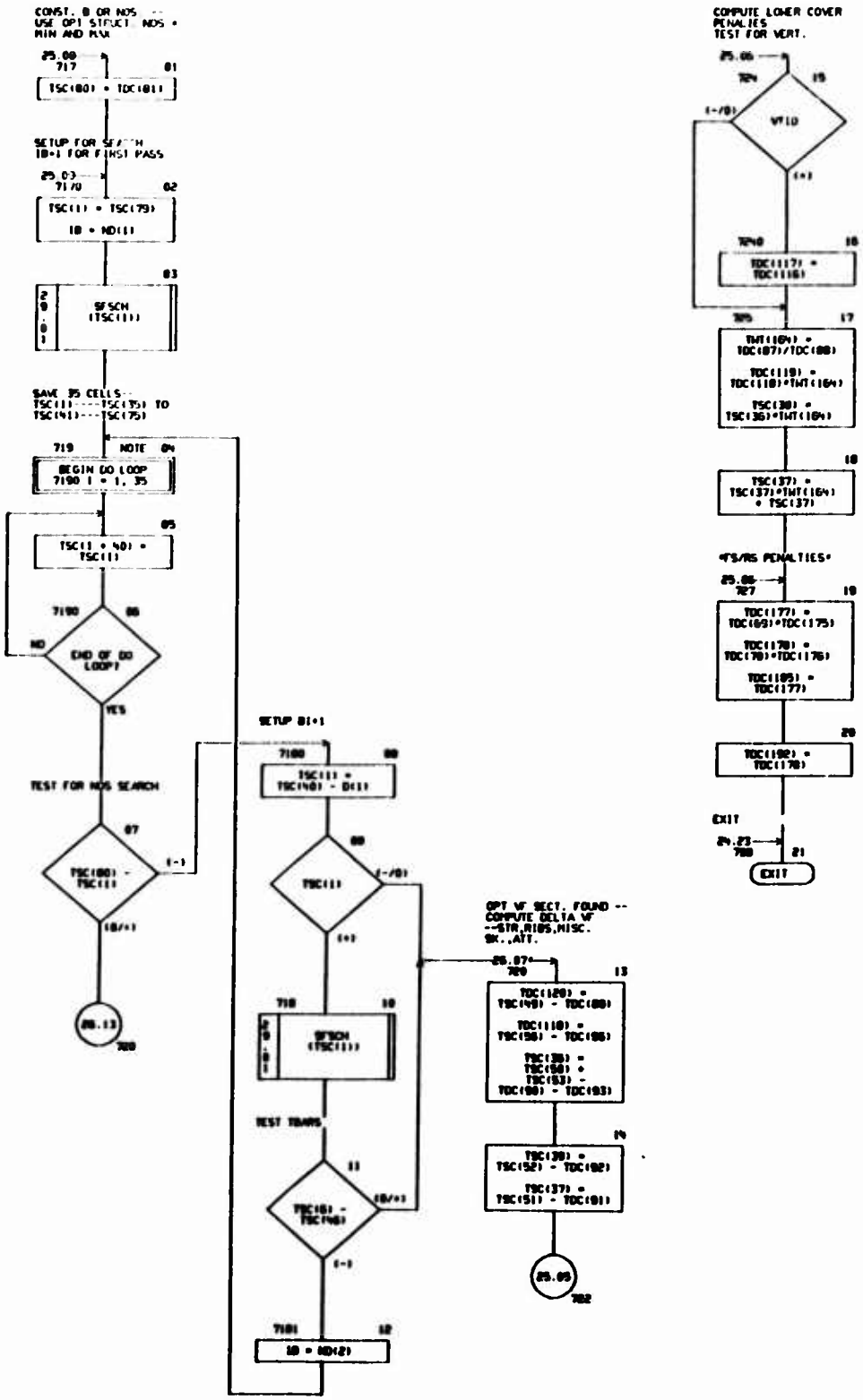

CHART TITLE - DXX PROCEDURAL STATEMENTS

```
COMMON T(2000),D(2000),CD(2000),ND(1000)
DIMENSION DC(1[illegible]),T[illegible]),TSC(4200),TSS(1000),TNT(4000),TSEC(3000),
DEL(30),
DJONT(11),D[illegible]11),
YBR(11),YEL(11),DRYU(11),DRAL(11),
DIBST(11),DVISM)
EQUIVALENCE (D(1),D(140)),(TD(1),T(13[illegible])),(TSC(1),T(15[illegible])),
(TSS(1),T(19[illegible])),(TNT(1),CD(110)),(TSEC(1),CD(150)),
(PI,D(15)),(VTID,D(28)),(T[illegible]),(D[illegible]),
(DRHD(1),D(5[illegible])),(DRST(1),D(6[illegible])),(DRIS(1),D(17[illegible])),
(DRDU(1),D(8[illegible])),(DRL(1),D(9[illegible])),(DCE(1),D(20[illegible])),
(STRIN,D(3[illegible])),(SMN,D(37[illegible])),(STEN,D(37[illegible])),(HSTMX,D(37[illegible])),
(HSTMN,D(3[illegible])),(STEMX,D(37[illegible])),(HMIN,D(3[illegible])),(EMX,D(3[illegible])),
(SNMIN,D(3[illegible])),(STEMX,D(3[illegible])),(SMAX,D(3[illegible])),(TMAX,D(3[illegible])),
(CNLID,D(4[illegible])),(DTC,D(46[illegible])),(DTCL,D(4[illegible])),(CONTC,D(35[illegible])),
(YER(1),T(6[illegible])),(YBR(1),T(1[illegible])),
EQUIVALENCE (DEL(1),THT(25[illegible])),(DL[illegible],DEL(2[illegible])),(DLFSH,DEL(5[illegible])),
(DLFSH,DEL(15)),(DRPST,DEL(1[illegible])),
(CURRT,THT(20[illegible])),(CE[illegible],THT(20[illegible])),
(IB,ND(5[illegible])),(ISM,ND(5[illegible])),(IDST,ND(5[illegible])),
(IBT,ND(7[illegible])),(IBX,ND(7[illegible])),
(ICD,ND(9[illegible])),(ISC,ND(2[illegible])),
(INEB,ND(3[illegible])),(IBASC,ND(6[illegible])),(IDT,ND(3[illegible])),
(ISEC,ND(5[illegible])),(I[illegible],ND(2[illegible]))
```

CHART TITLE - INTRODUCTORY COMMENTS

```
*************************************************************

      *****SUBROUTINE SFSCH*****
   ***SEARCH LEVEL 2 CONTROL - ALLOWABLE DESIGN STRESSES***

*************************************************************
```

CHART TITLE - SUBROUTINE SFSCH(BSTR)

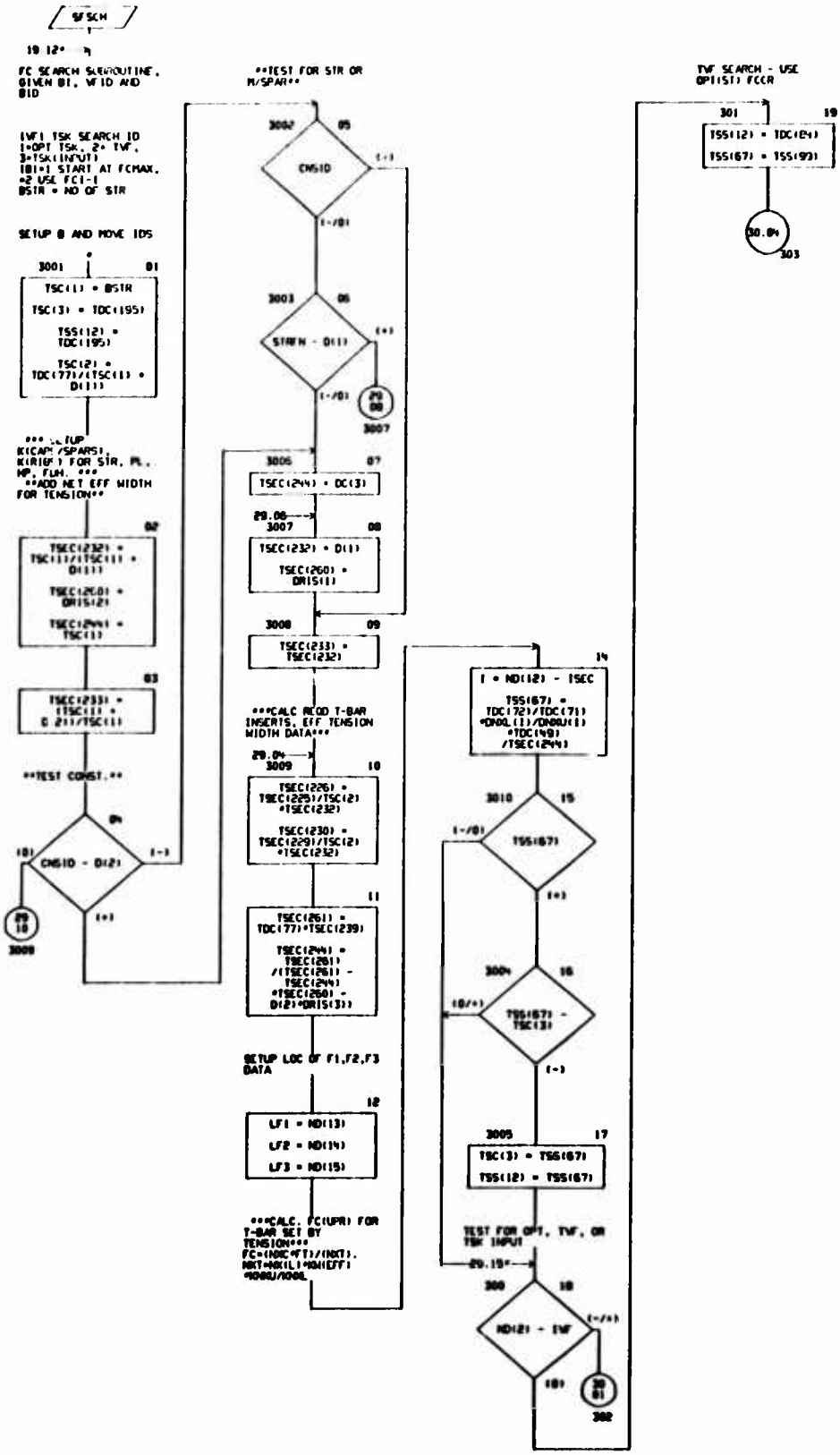

CHART TITLE - SUBROUTINE SESCHI(STR)

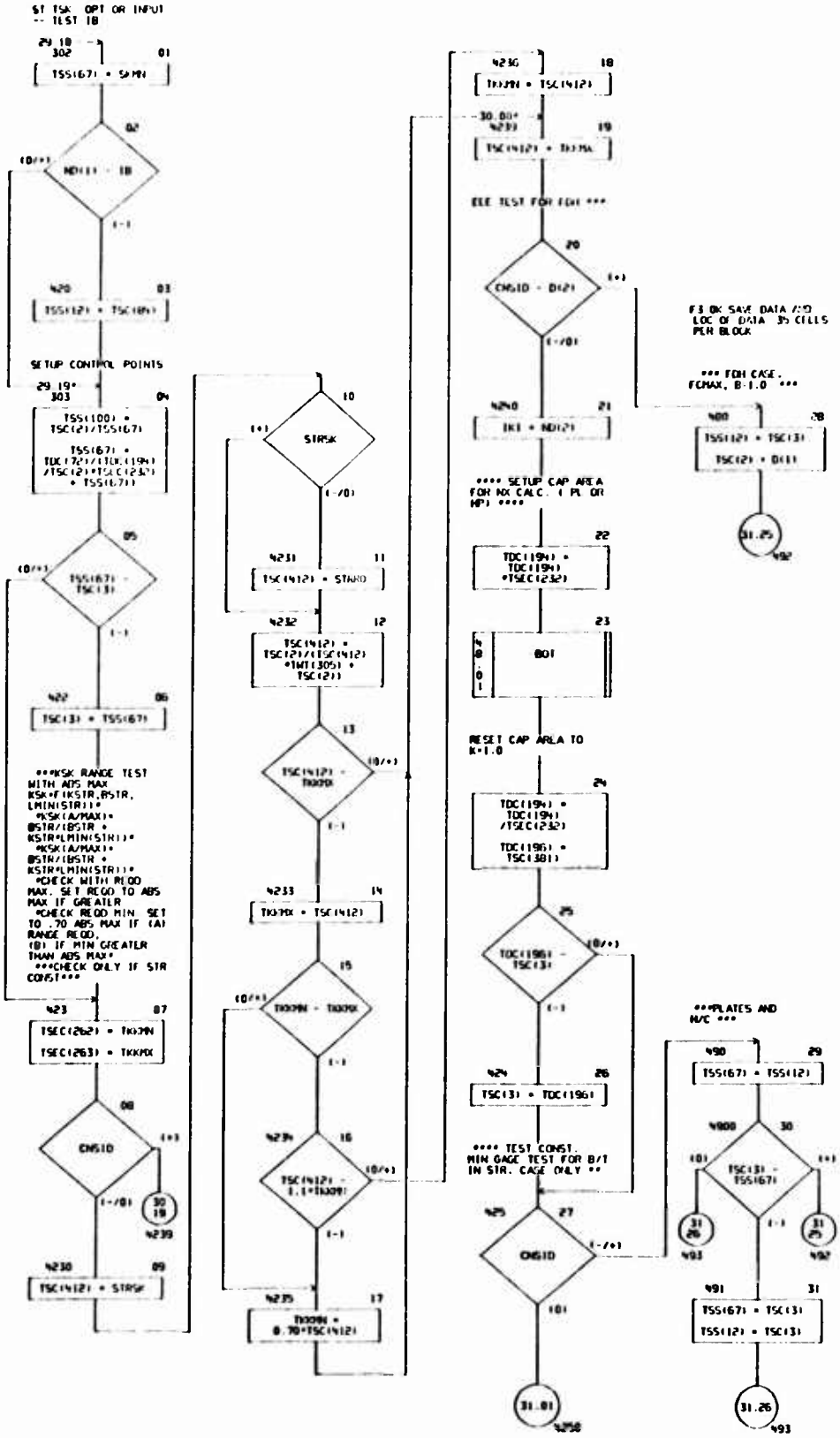

CHART TITLE - SUBROUTINE SESWHB.TKI

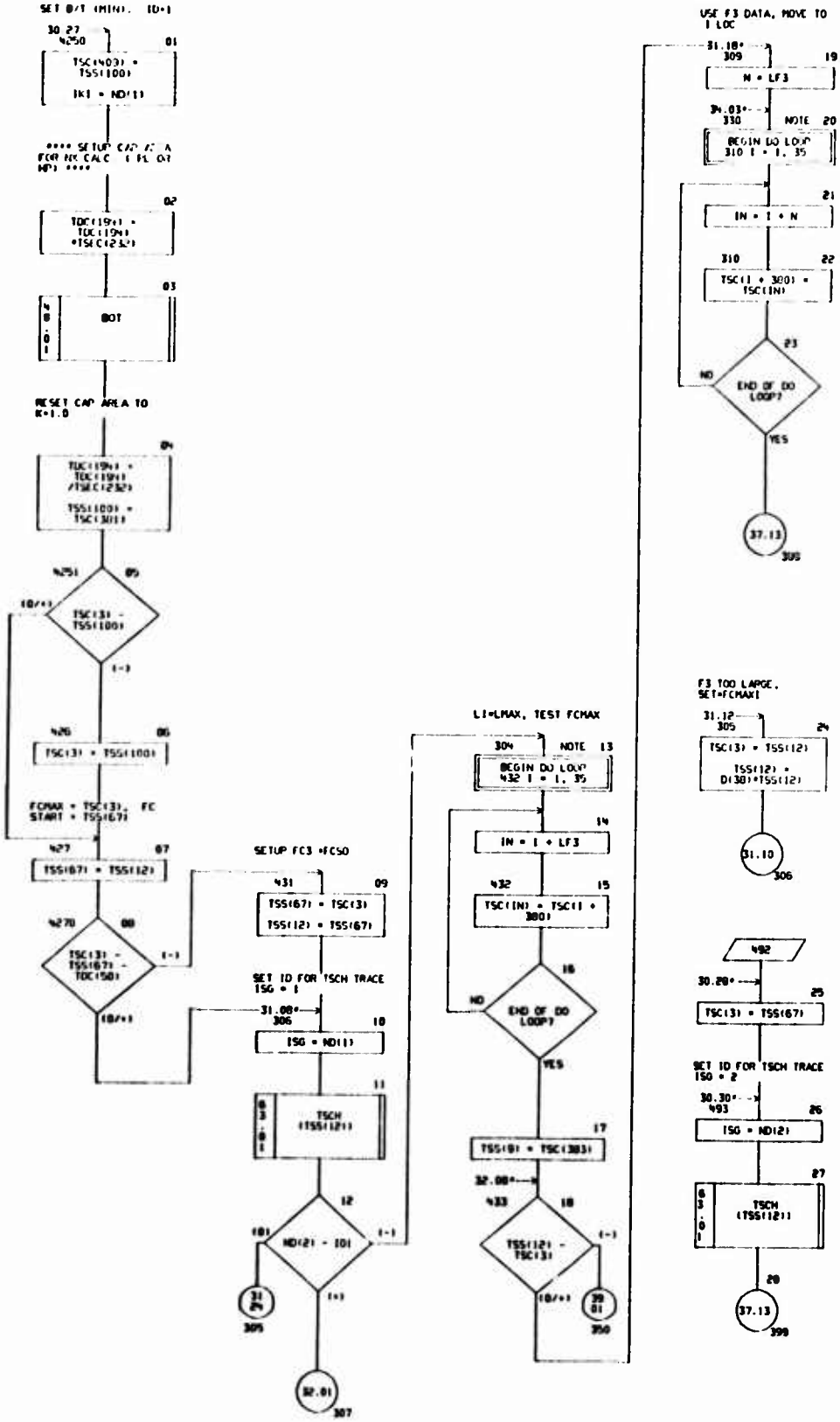

CHART TITLE - SUBROUTINE SESCHIBSTR)

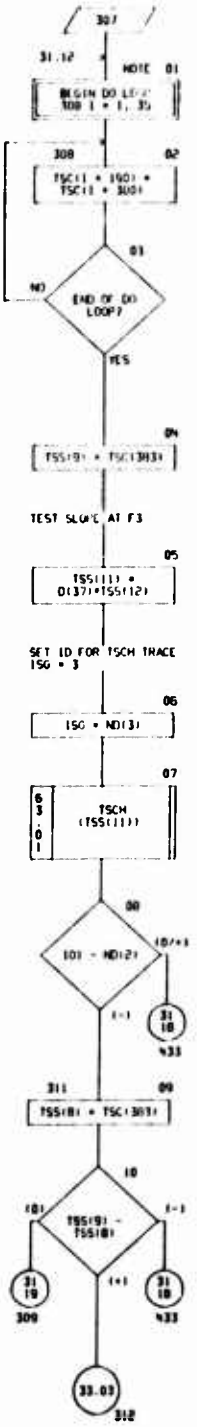

CHART TITLE - SUBROUTINE SFSCH(BSTR)

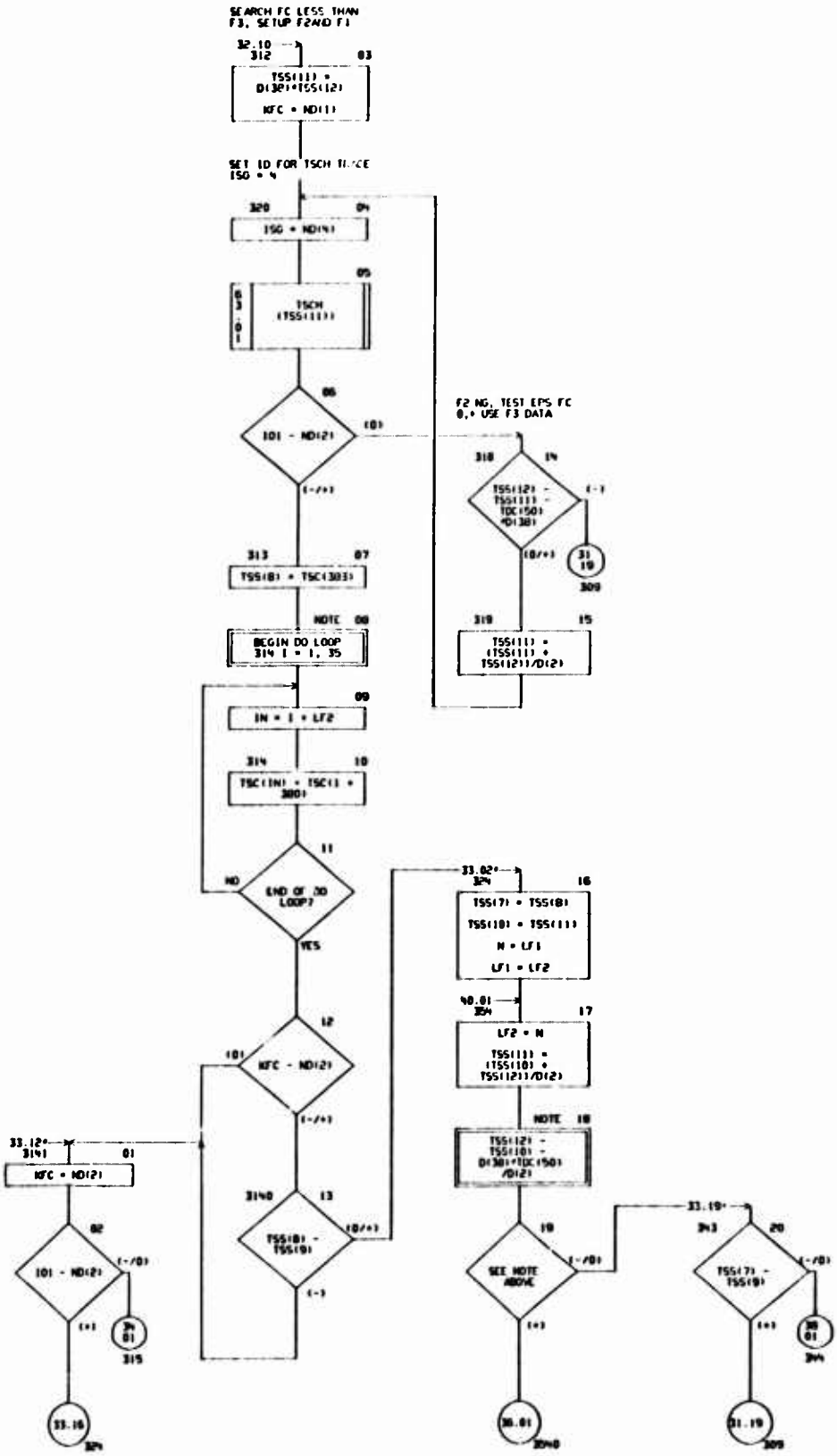

CHART TITLE - SUBROUTINE SFSCHIBSTR1

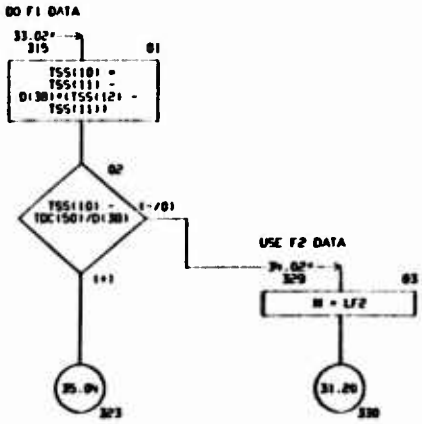

CHART TITLE - SUBROUTINE SESCHE(IR)

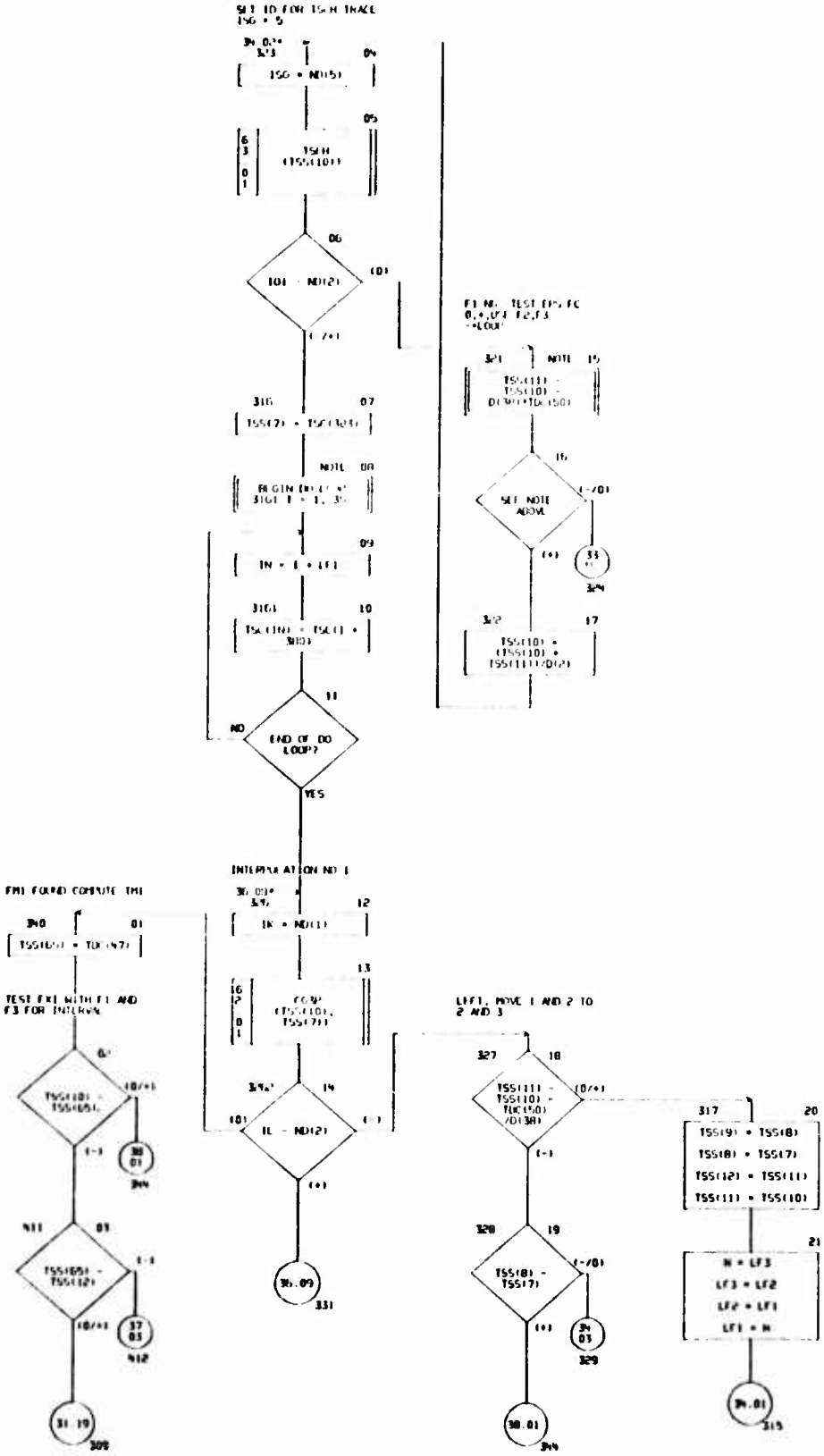

CHART TITLE - SUBROUTINE SESCH(DSTR)

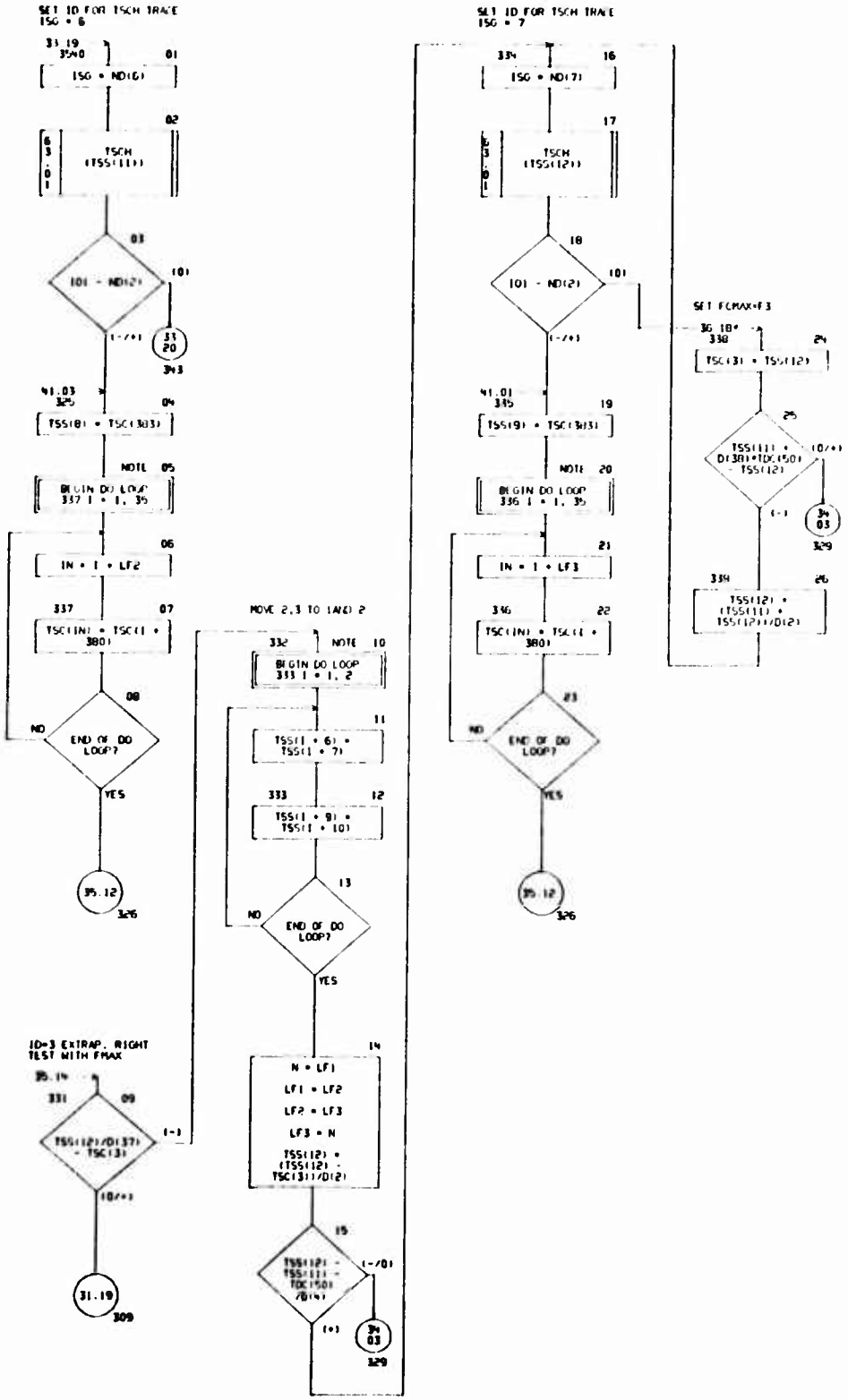

CHART TITLE - SUBROUTINE SUSCHDSTR)

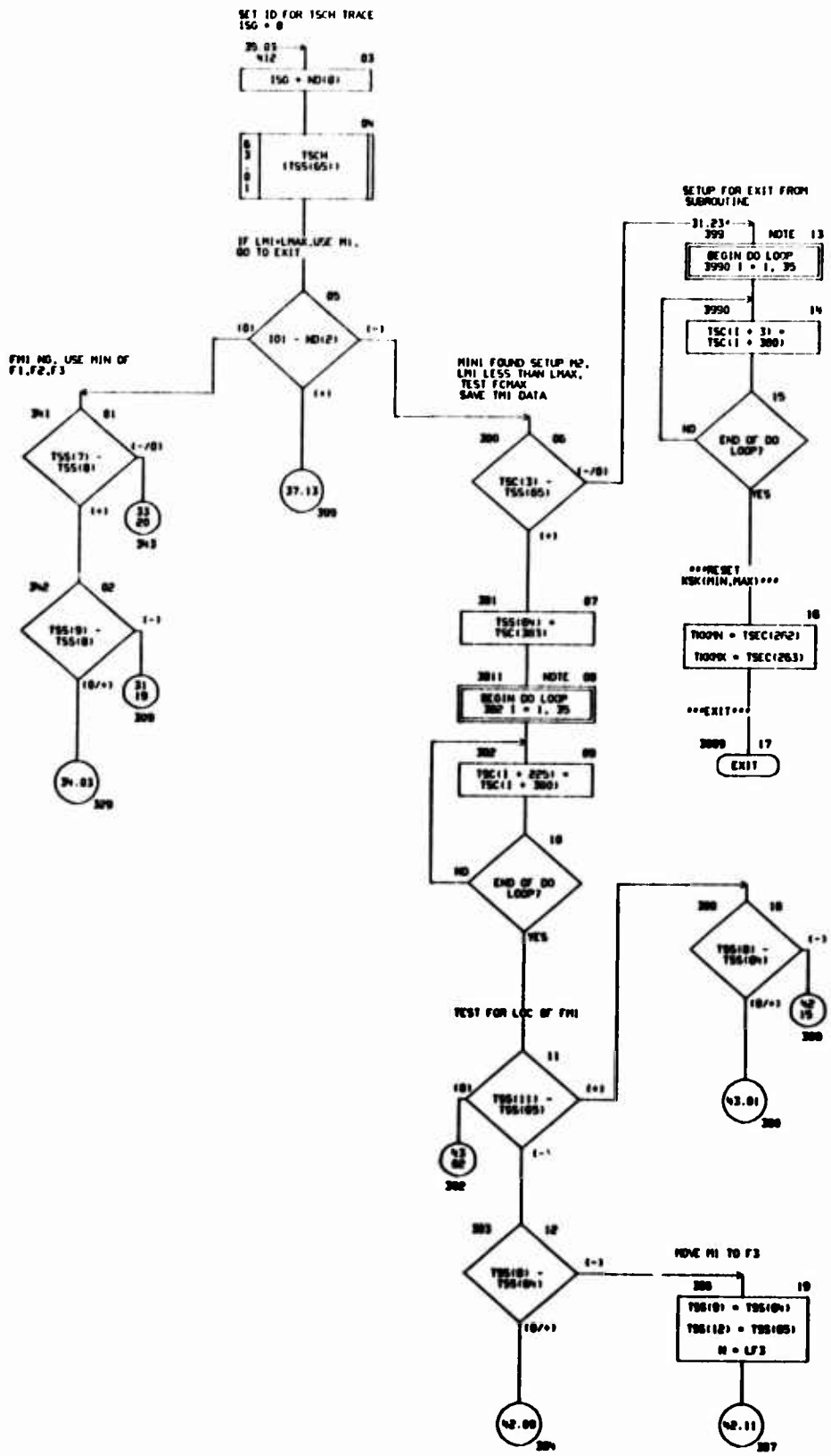

CHART TITLE - SUBROUTINE SFSCHIBSTRI

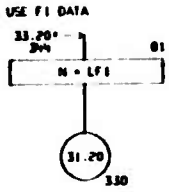

CHART TITLE - SUBROUTINE SWS MOD(IN)

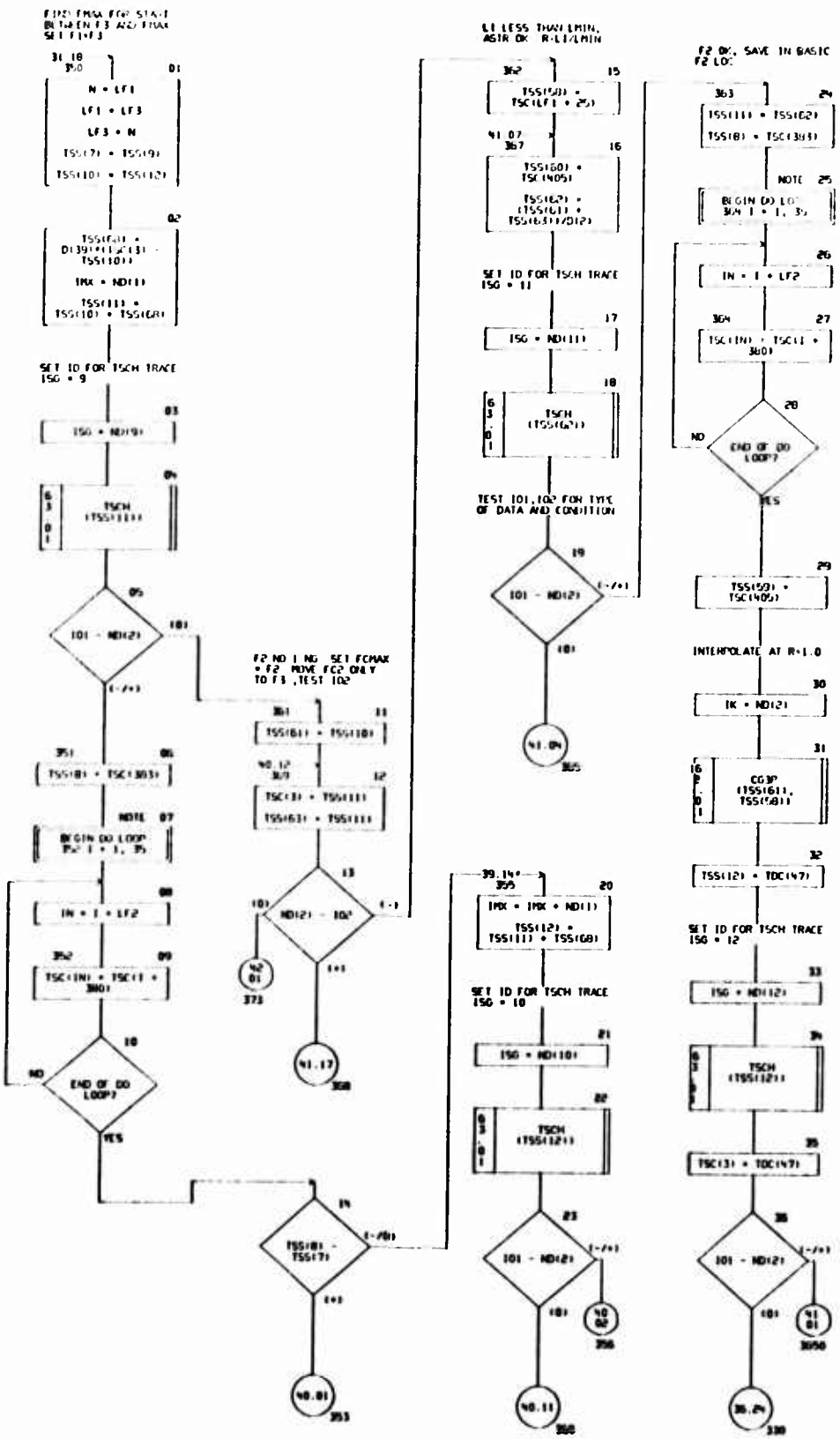

CHART TITLE - SUBROUTINE SFSCHIDSTR

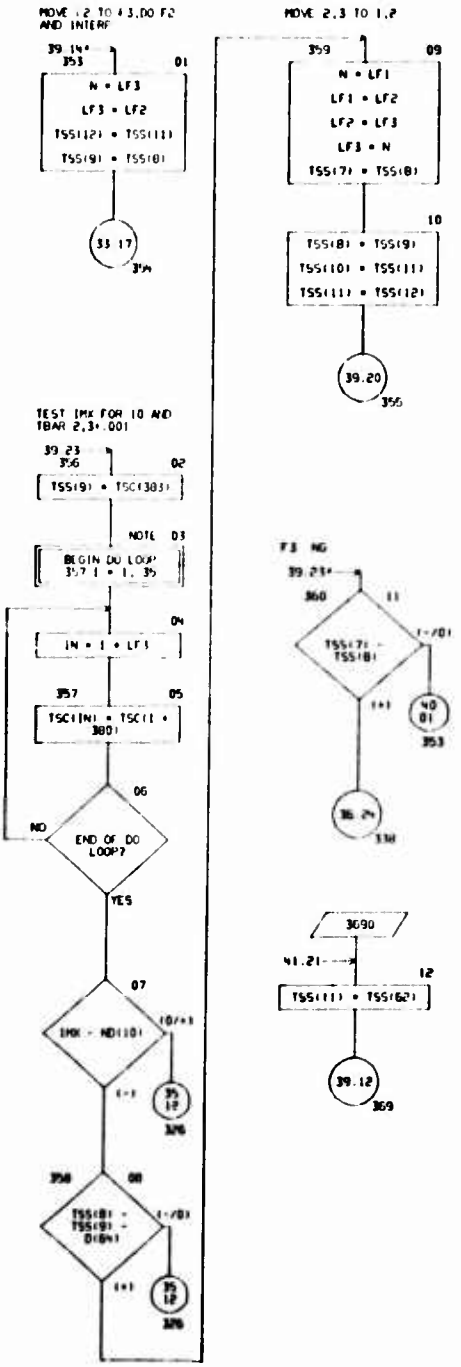

CHART TITLE - SUBROUTINE SFSCHIBSTR)

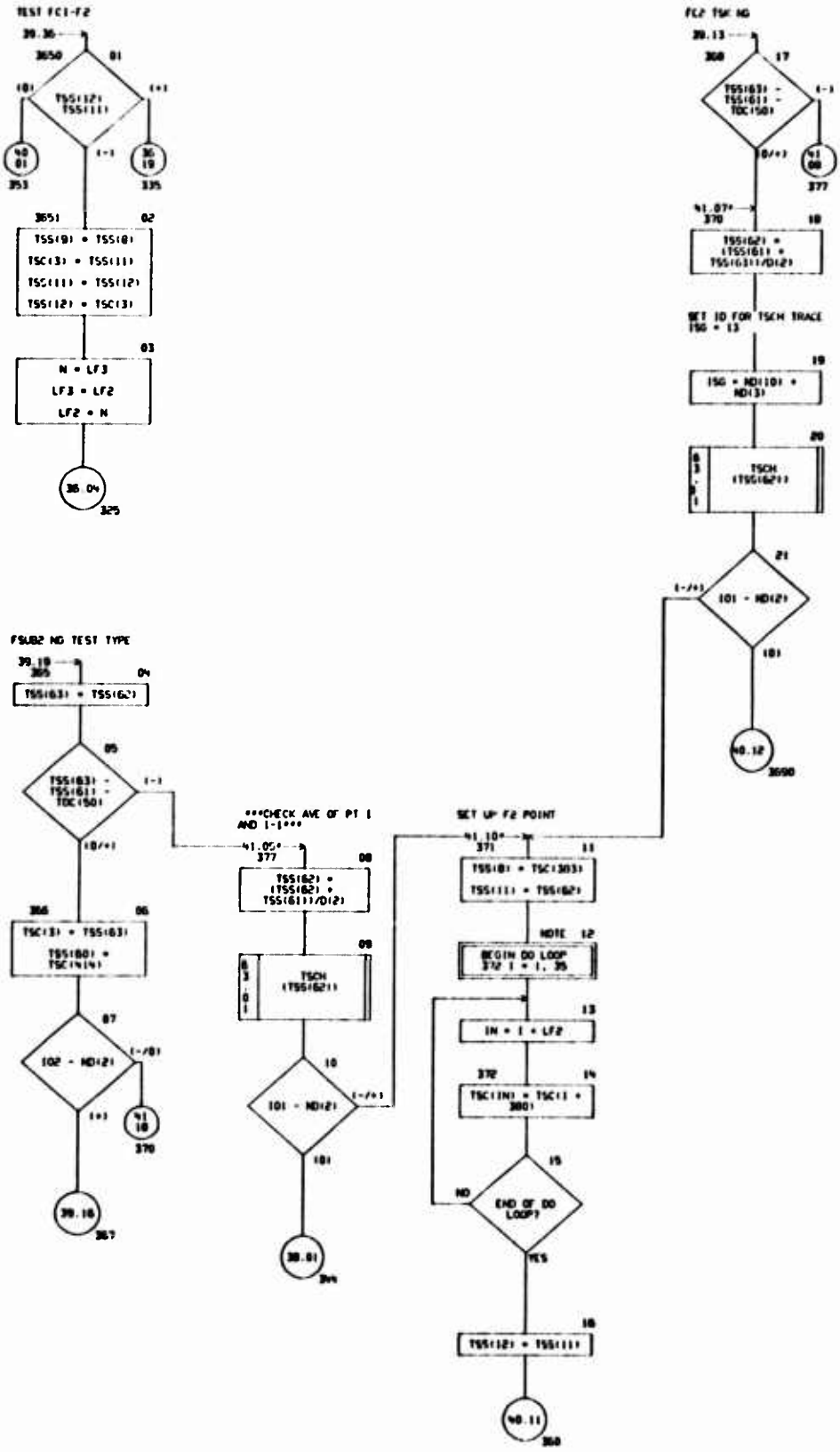

CHART TITLE - SUBROUTINE SFSCH(BSTR)

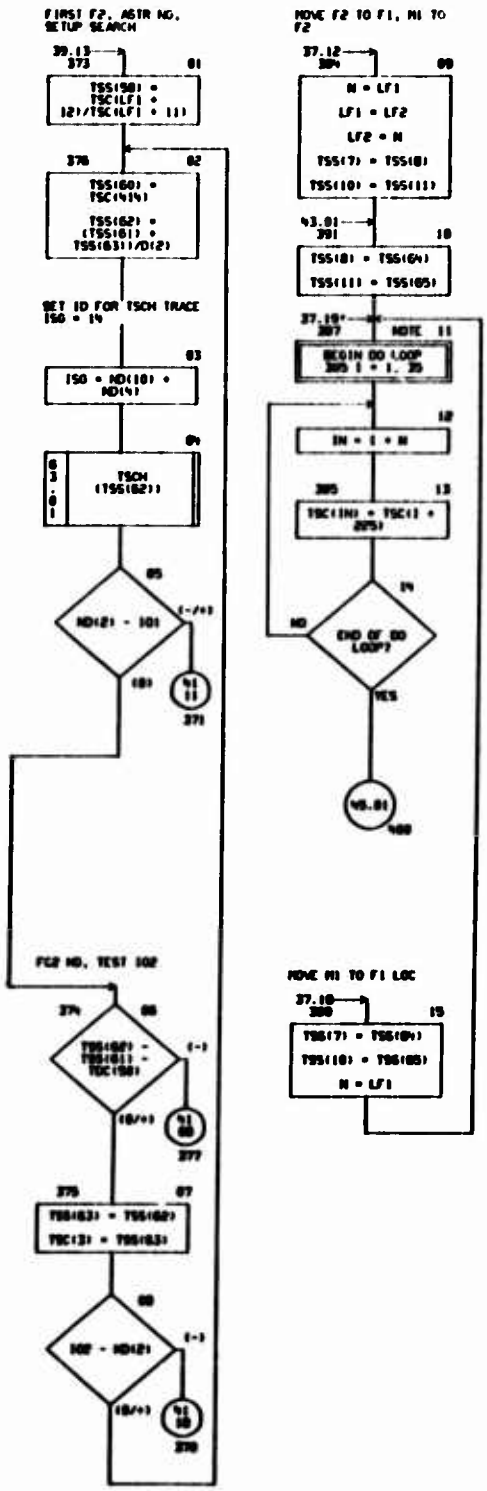

CHART TITLE - SUBROUTINE SCHEDSTR1

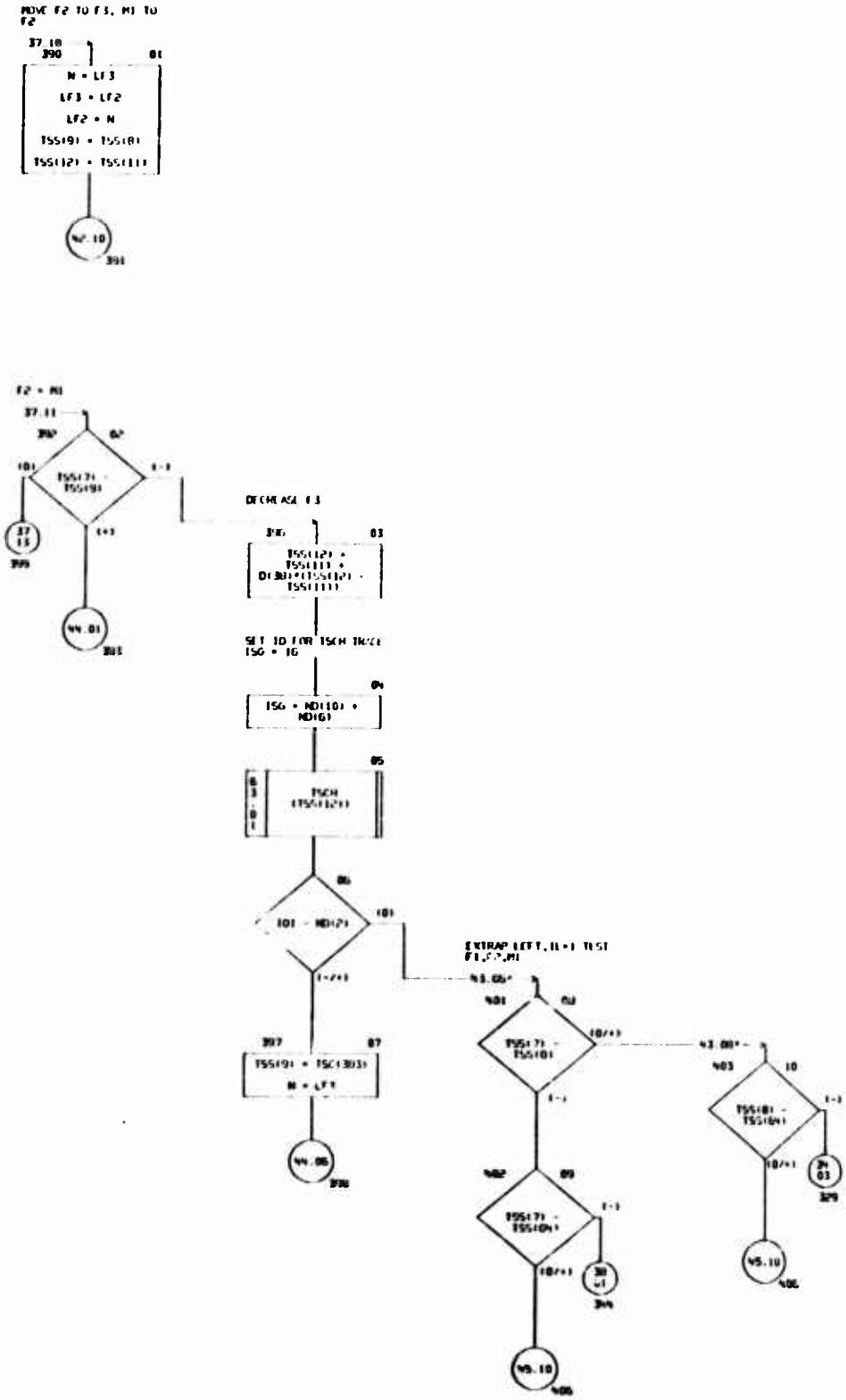

CHART TITLE - SUBROUTINE SFSCHIGSTR1

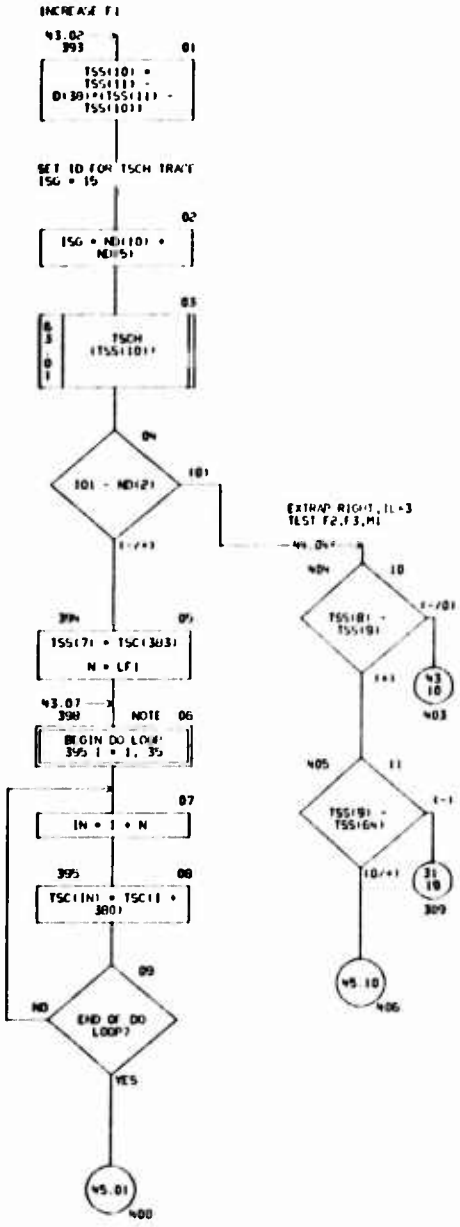

CHART TITLE - SUBROUTINE SFSCHIBSTHI

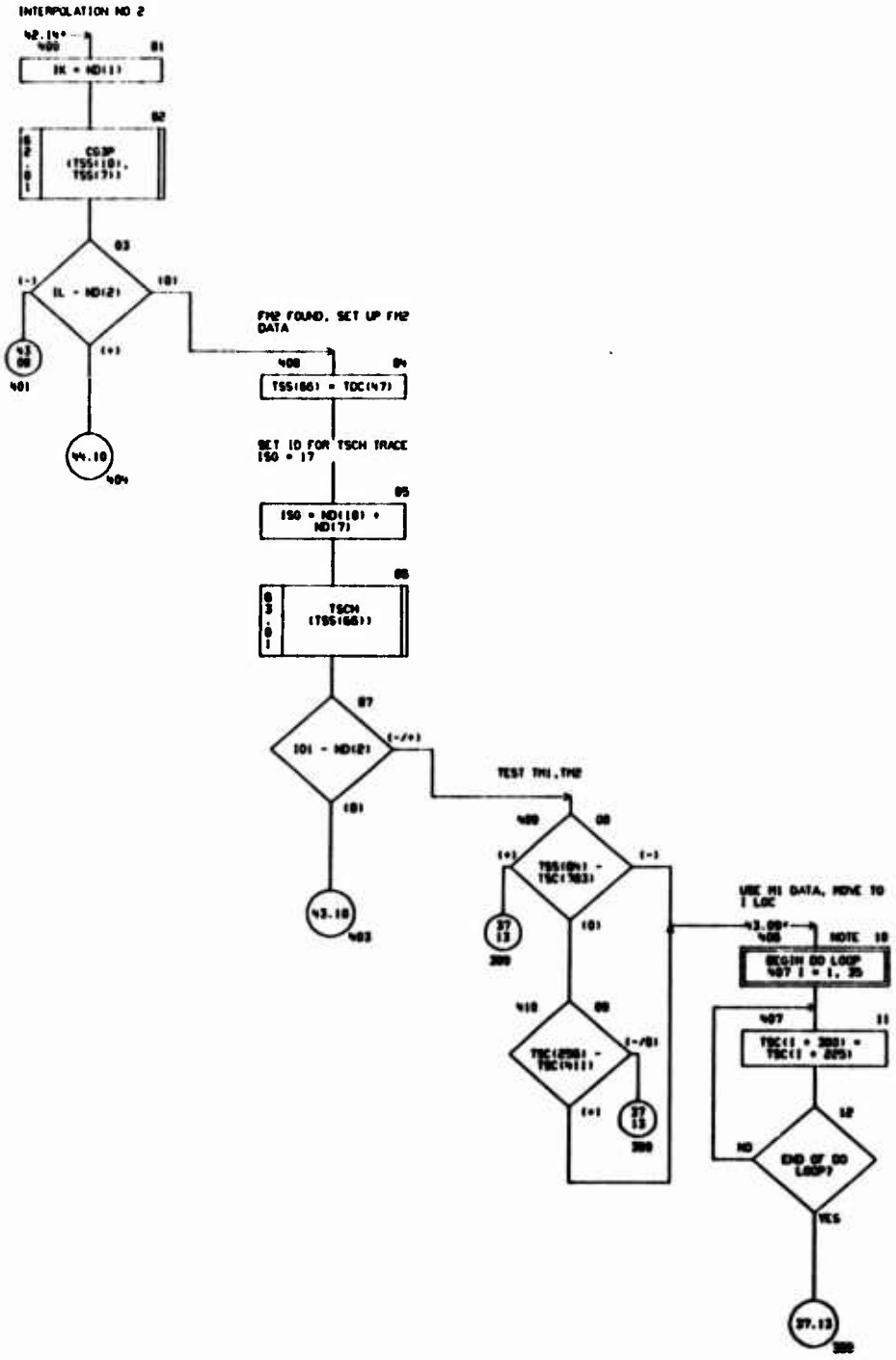

CHART TITLE - NON PROCEDURAL STATEMENTS

```
COMMON T(2060),D(2060),CD(2000),ND(100)
DIMENSION                                DC(100),
TDC(200),TSC(420),TSS(100),TWT(400),TSCC(300)
,DRIS(4),DRAU(1),DRDL(1)
EQUIVALENCE (TDC(1),T(1134)),(TSC(1),T(1154)),(TSS(1),T(1196)),
(DC(1),D(1401)),(TWT(1),CD(1101)),(TSCC(1),CD(1501)),
(DRAU(1),D(931)),(DRDL(1),D(962)),(DRIS(1),D(975)),
(STRFN,D(36)),(SKIN,D(370)),(CNSID,D(46)),
(STRSK,D(45)),(STRRO,D(456)),
(TKMN,TDC(64)),(TKMX,TDC(65)),
(IB,ND(52)),(IVF,ND(51)),(ITC,ND(41)),(IPX,ND(47)),
(IO2,ND(46)),(IO1,ND(45)),(LF3,ND(44)),(LF2,ND(43)),(LF1,ND(42)),
(IL,ND(40)),(IK,ND(39)),(IKI,ND(32)),(IN,ND(30)),(ISG,ND(86)),
(ISEC,ND(55)),(IN,ND(31)),(I,ND(29))
```

CHART TITLE - INTRODUCTORY COMMENTS

```
*****************************************************************

      *****SUBROUTINE B01*****
   ***INTERPOLATION/EVALUATION FOR COMPRESSION STRESS, GIVEN 1B/T1***

*****************************************************************
```

CHART TITLE - SUBROUTINE BOT

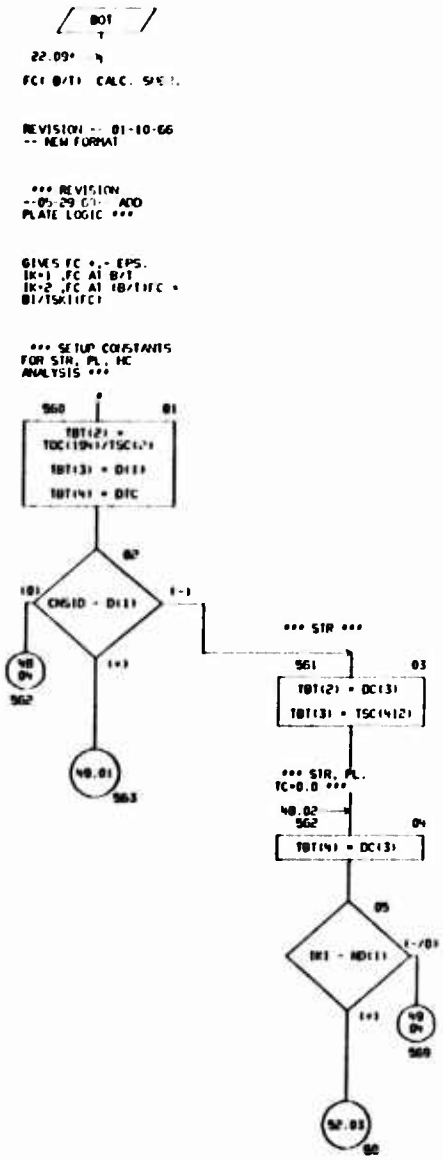

CHART TITLE - SUBROUTINE B01

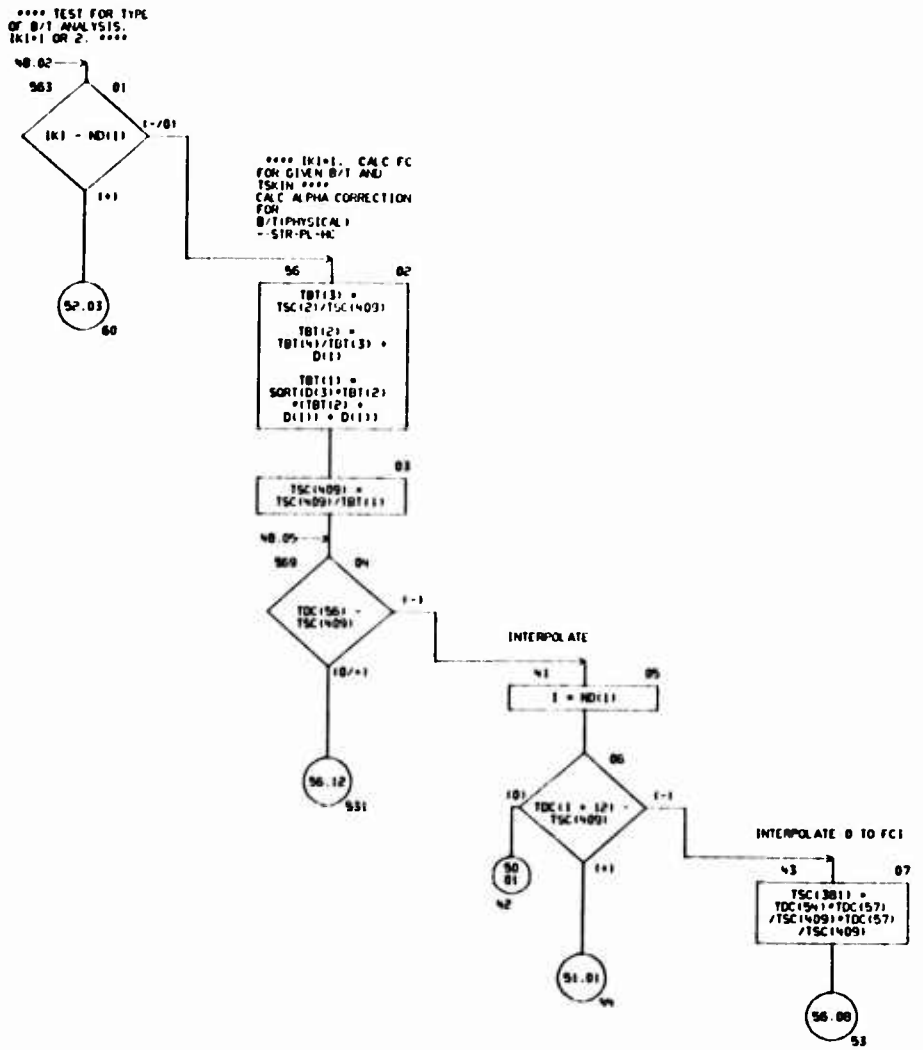

CHART TITLE - SUBROUTINE B01

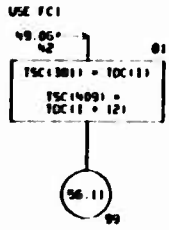

CHART TITLE - S.S. VIEW BDT

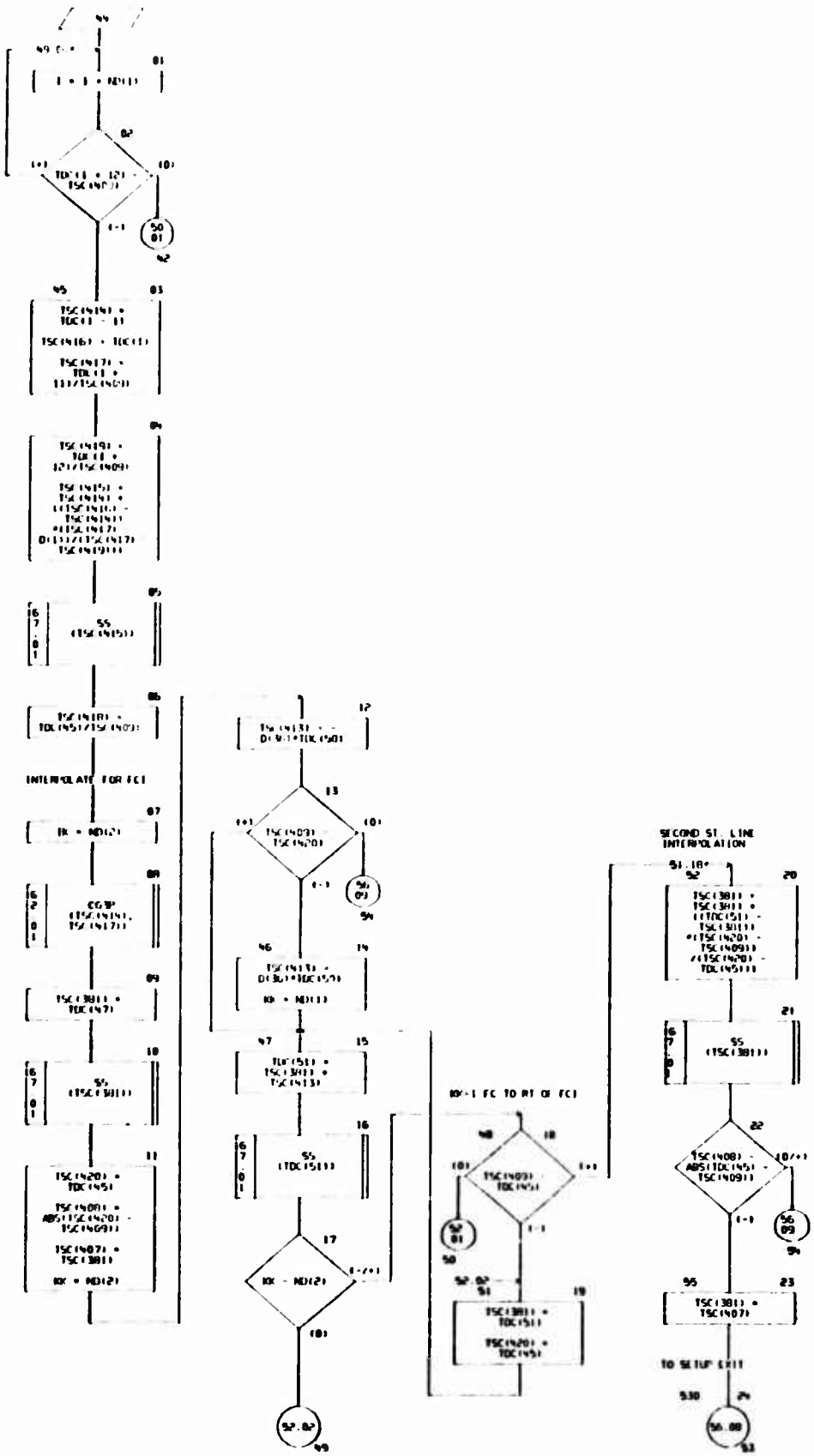

CHART TITLE - SUBROUTINE B01

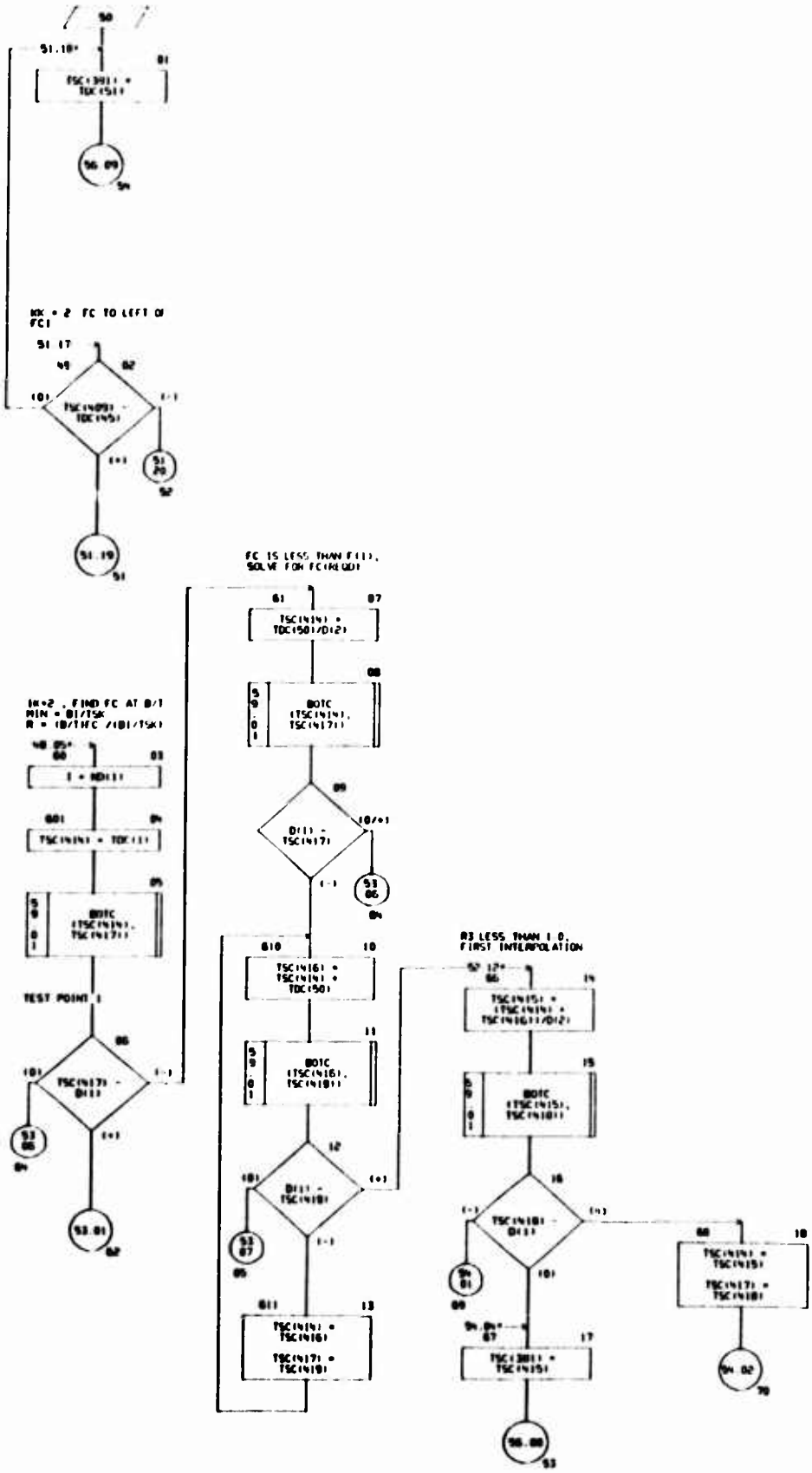

CHART TITLE - SUBROUTINE BOT

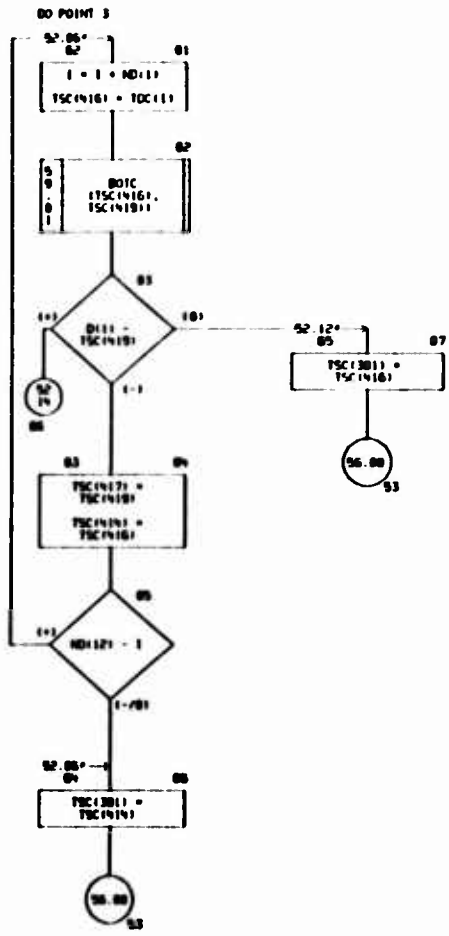

CHART TITLE - SUBROUTINE B01

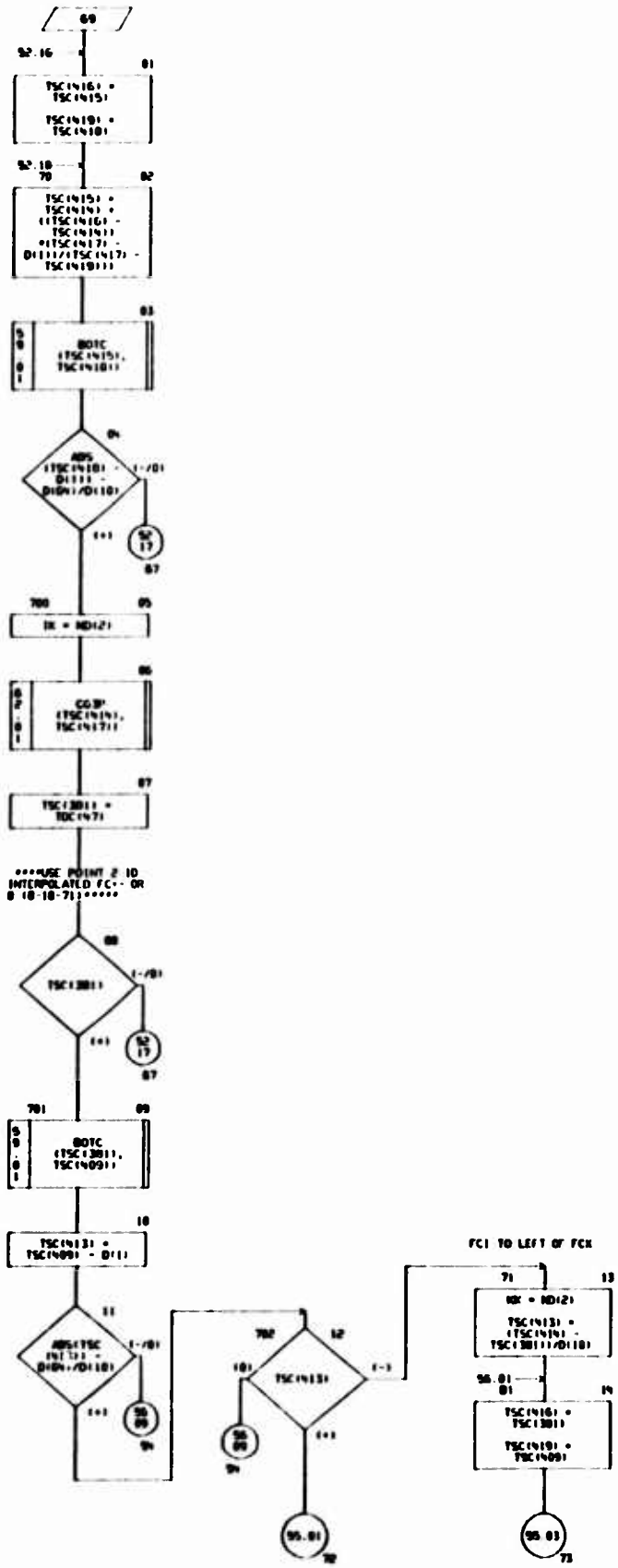

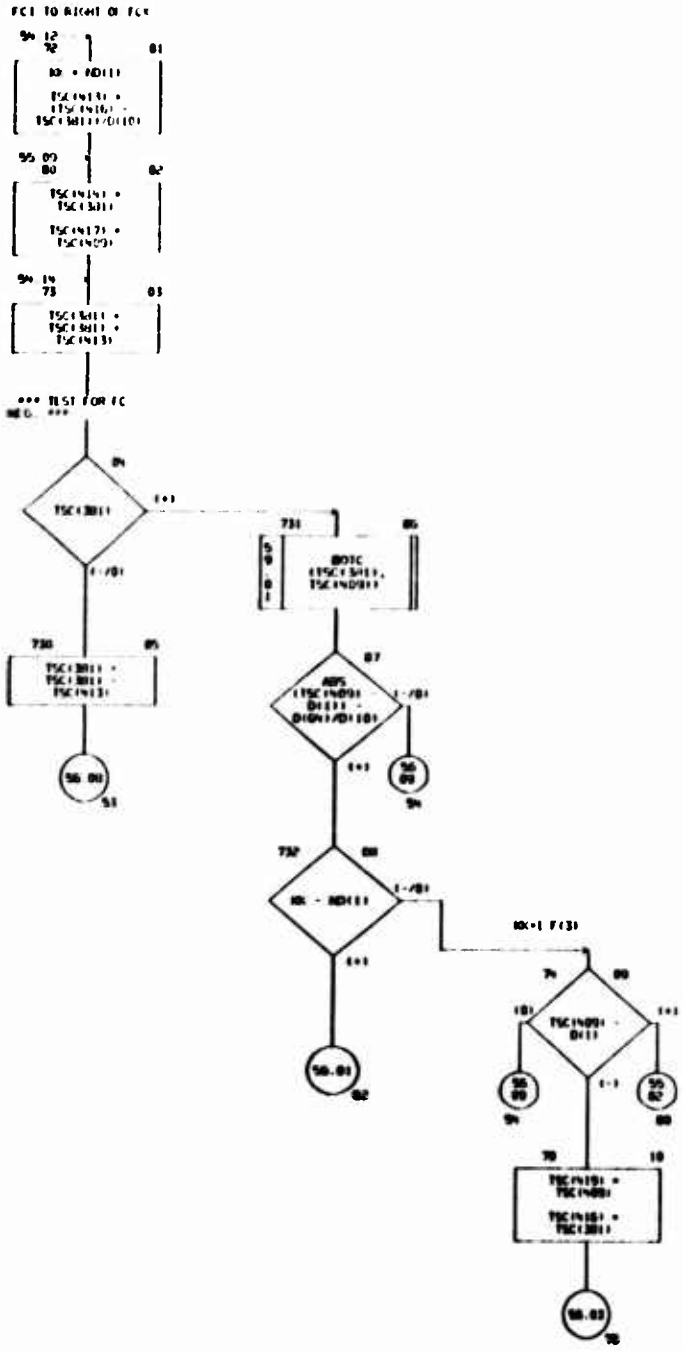
*** TEST FOR FC
NEG. ***

CHART TITLE - SUBROUTINE 601

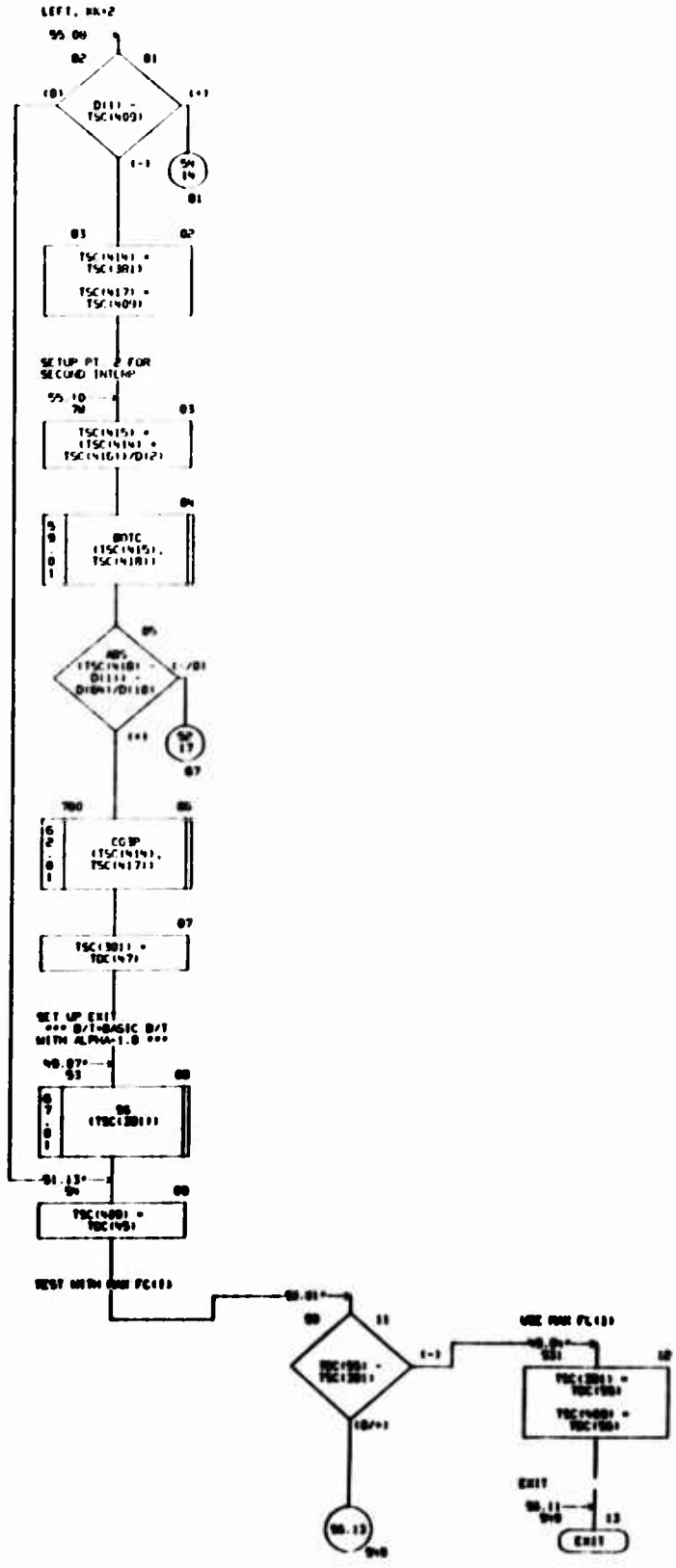

CHART TITLE - NON-PROCEDURAL STATEMENTS

```
COMMON T(20601),D(20601),CD(20001),N(100)
DIMENSION DC(100),TDC(200),TSC(420),TSS(100),TBT(4)
EQUIVALENCE (TDC(1),T(1136)),(TSC(1),T(1154)),(TSS(1),T(1196)),
(TRXMX,T(1405)),(TBT(1),T(1317))
EQUIVALENCE (DC(1),D(1401)),(CKSK,D(362)),
(DTC,D(462)),(CNSID,D(461))
EQUIVALENCE (IL,ND(40)),(IK,ND(39)),(IK1,ND(32)),(MX,ND(31)),
(I,ND(30))
```

CHART TITLE - INTRODUCTORY COMMENTS

```
*****************************************************************

      *****SUBROUTINE BDTC*****
   ***PLATE BUCKLING (B/T) EVALUATION***

*****************************************************************
```

CHART TITLE - SUBROUTINE BOTC(SFC1,RBT1)

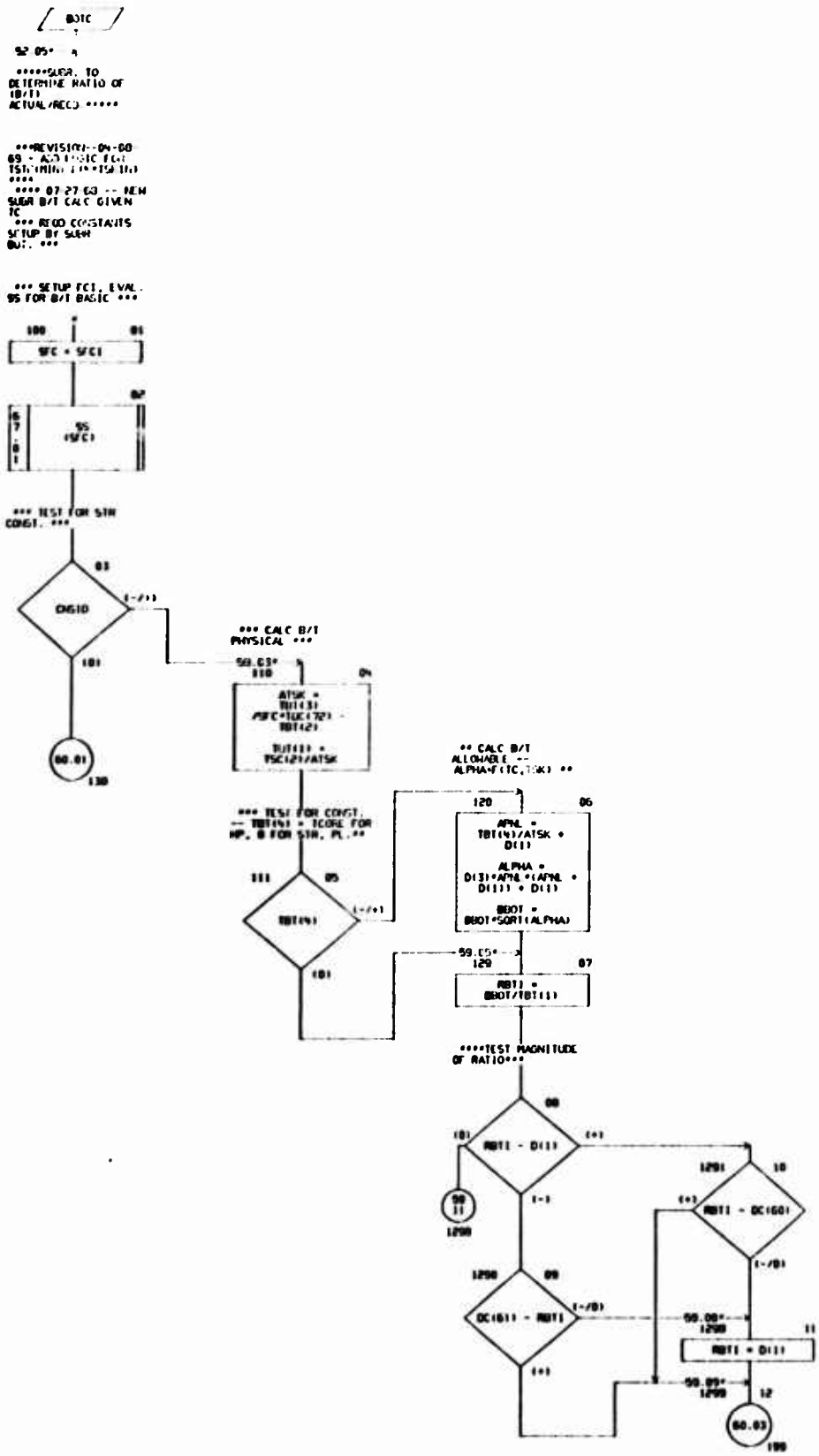

CHART TITLE - SUBROUTINE BOTC(SECT,RBT)

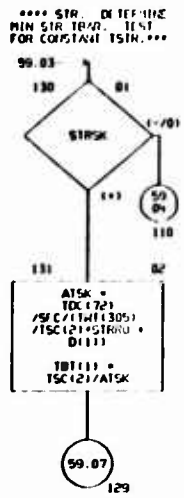

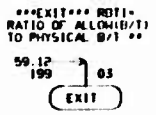

CHART TITLE - NON-PROCEDURAL STATEMENTS

```
COMMON T(2060),D(2060),CD(2000),ND(100)
DIMENSION DC(100),TDC(200),TSC(420),TSS(100),TWT(400),TSEC(300),
TBT(4)
EQUIVALENCE (TDC(1),T(1394)),(TSC(1),T(1594)),(TSS(1),T(1896)),
(SFC,T(1387)),(DBOT,T(1305)),(TBT(1),T(1317))
EQUIVALENCE (DC(1),D(140)),(STRMN,D(37)),(CNSID,D(46)),
(STRRO,D(456)),(STRSK,D(455))
EQUIVALENCE (TSEC(1),CD(150)),(TWT(1),CD(110))
```

CHART TITLE - INTRODUCTORY COMMENTS

```
*****************************************************************

      *****SUBROUTINE TSCH*****
   ***SEARCH LEVEL 3 CONTROL - OPTIMUM TISCHIN), A STR)***

*****************************************************************
```

CHART TITLE - SUBROUTINE TSCH(TSEC)

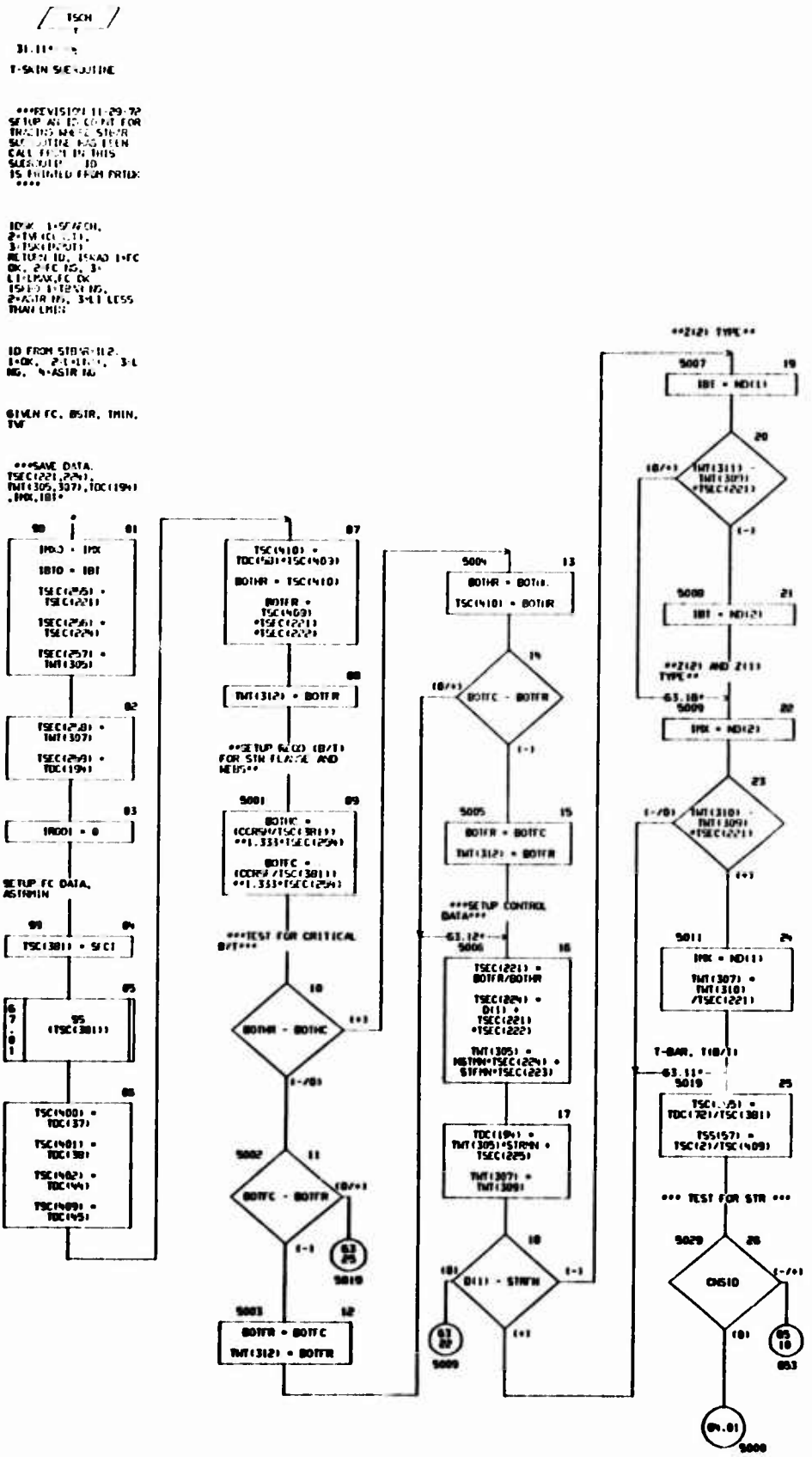

CHART TITLE - SUBROUTINE TSCHISF(I)

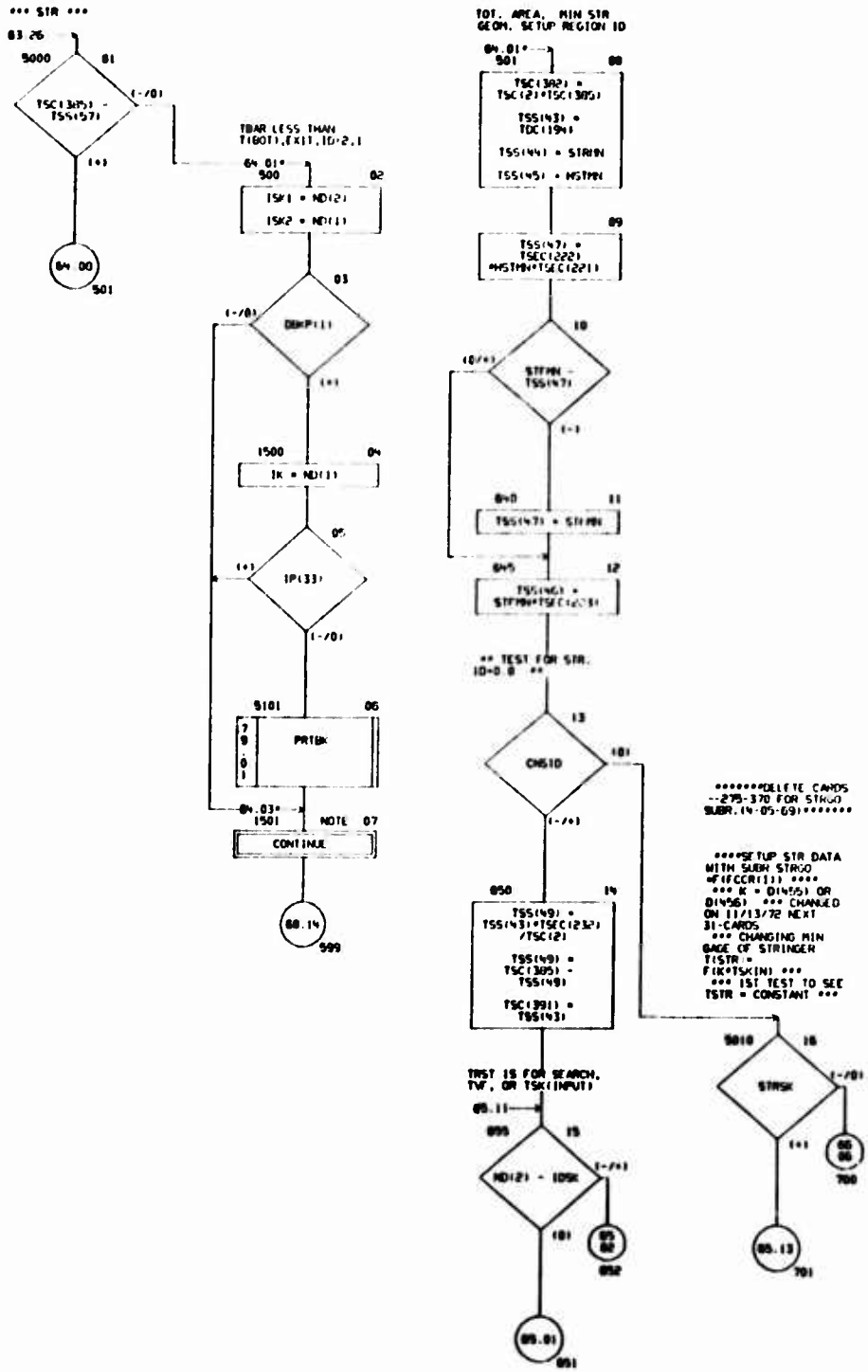

CHART TITLE - SUBROUTINE TSCHISF(I)

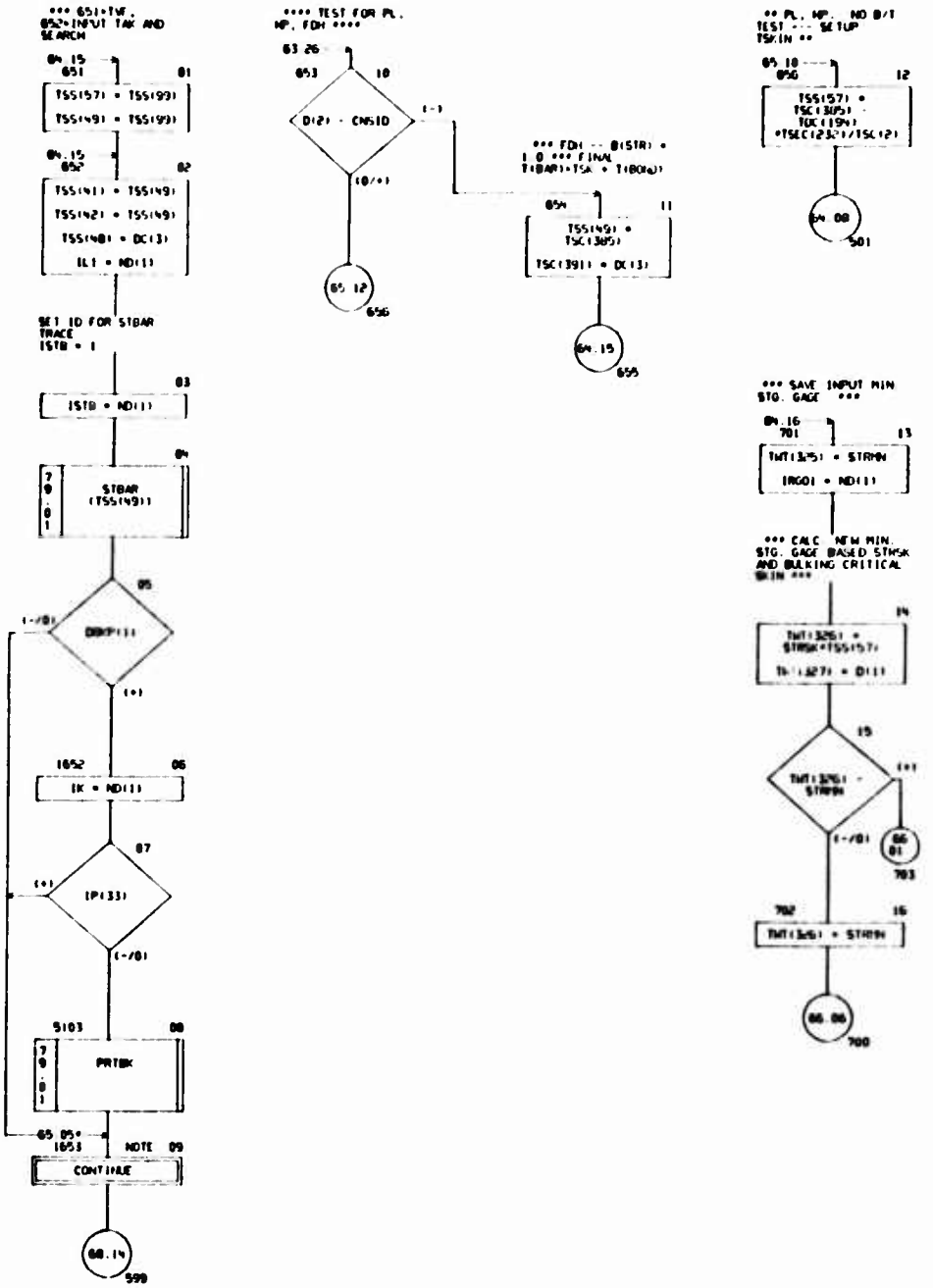

CHART TITLE - SUBROUTINE TSCH(SEC)

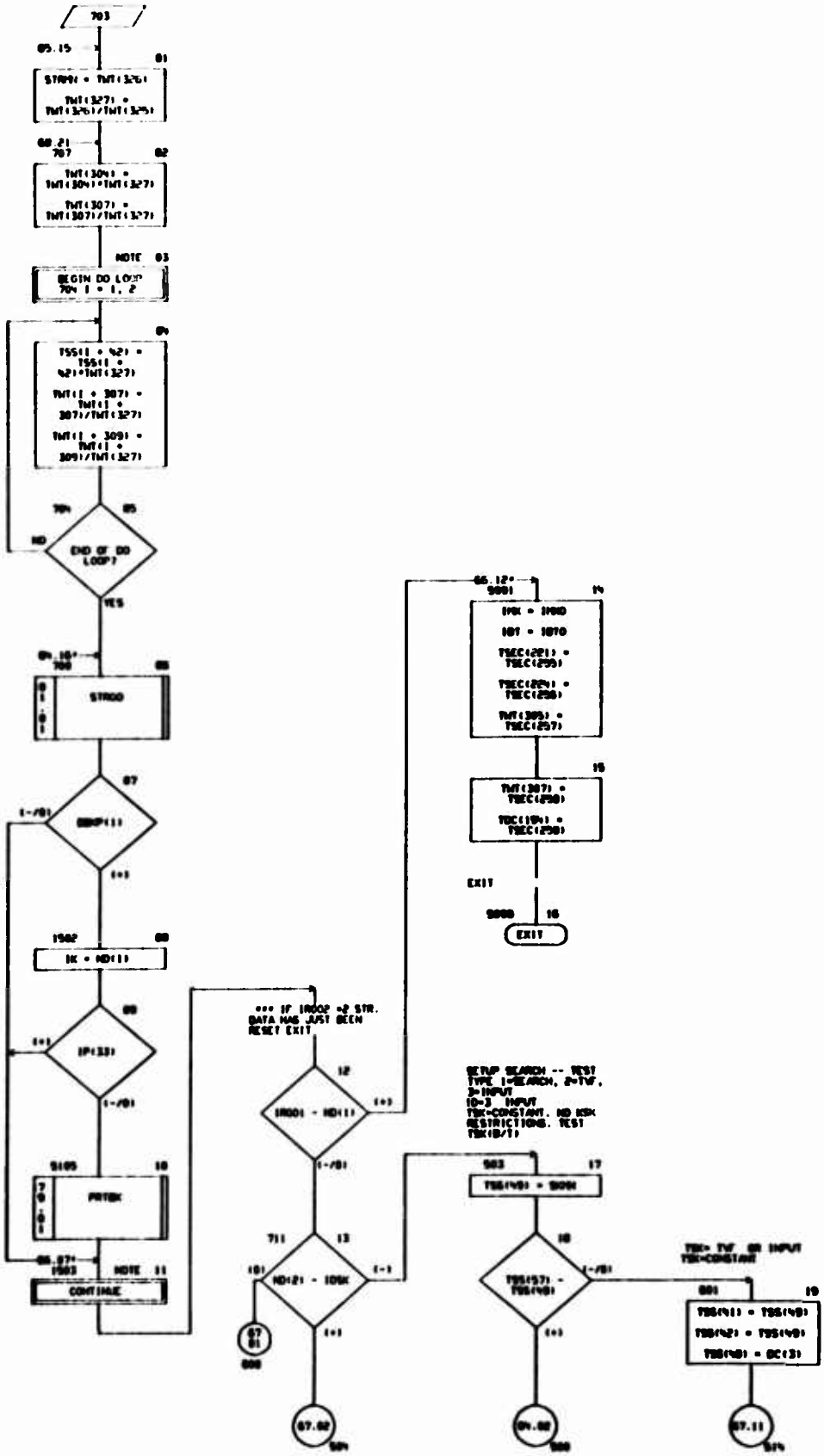

CHART TITLE - SUBROUTINE TSCHISEC1

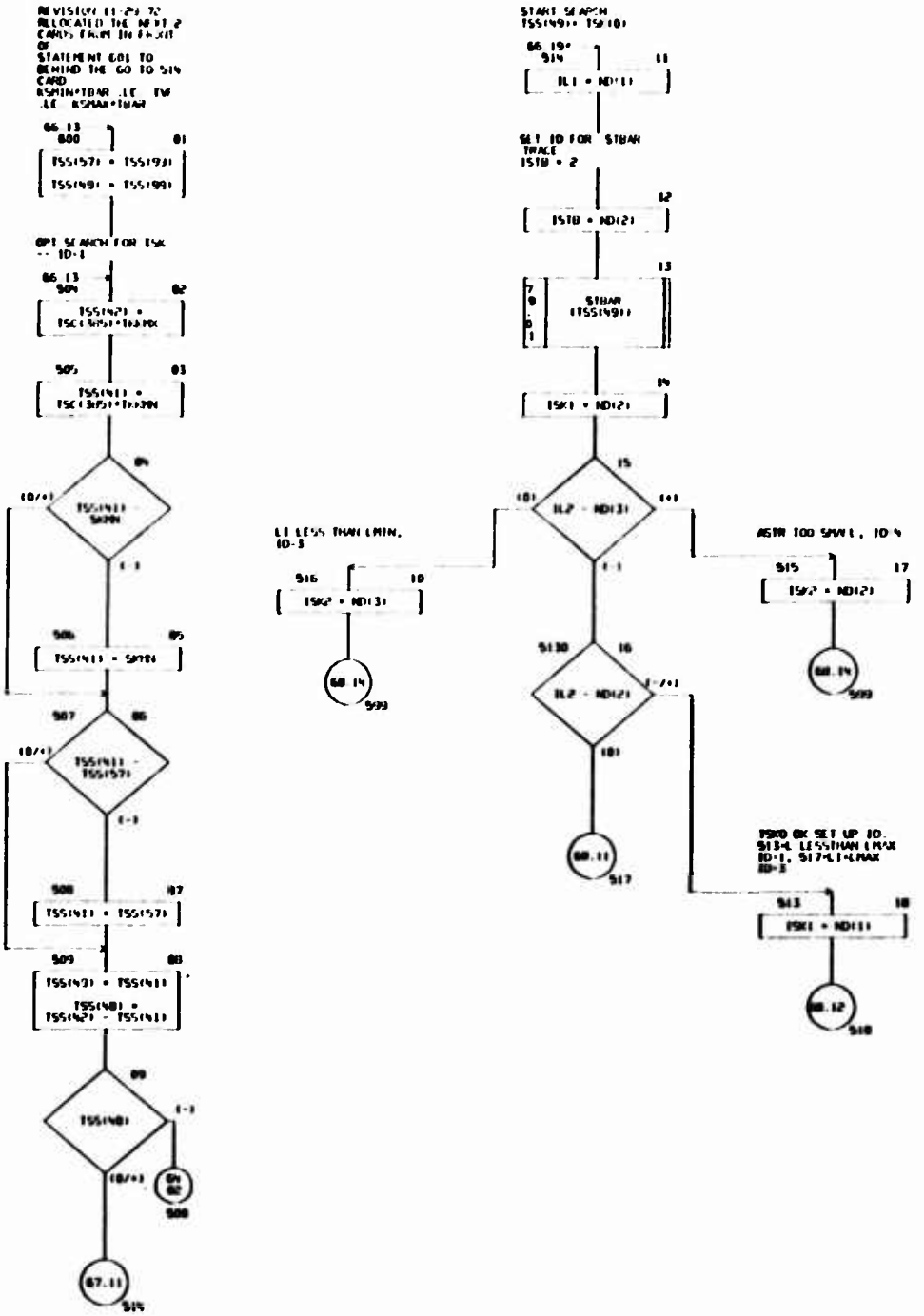

CHART TITLE - SUBROUTINE TSCHISP(I)

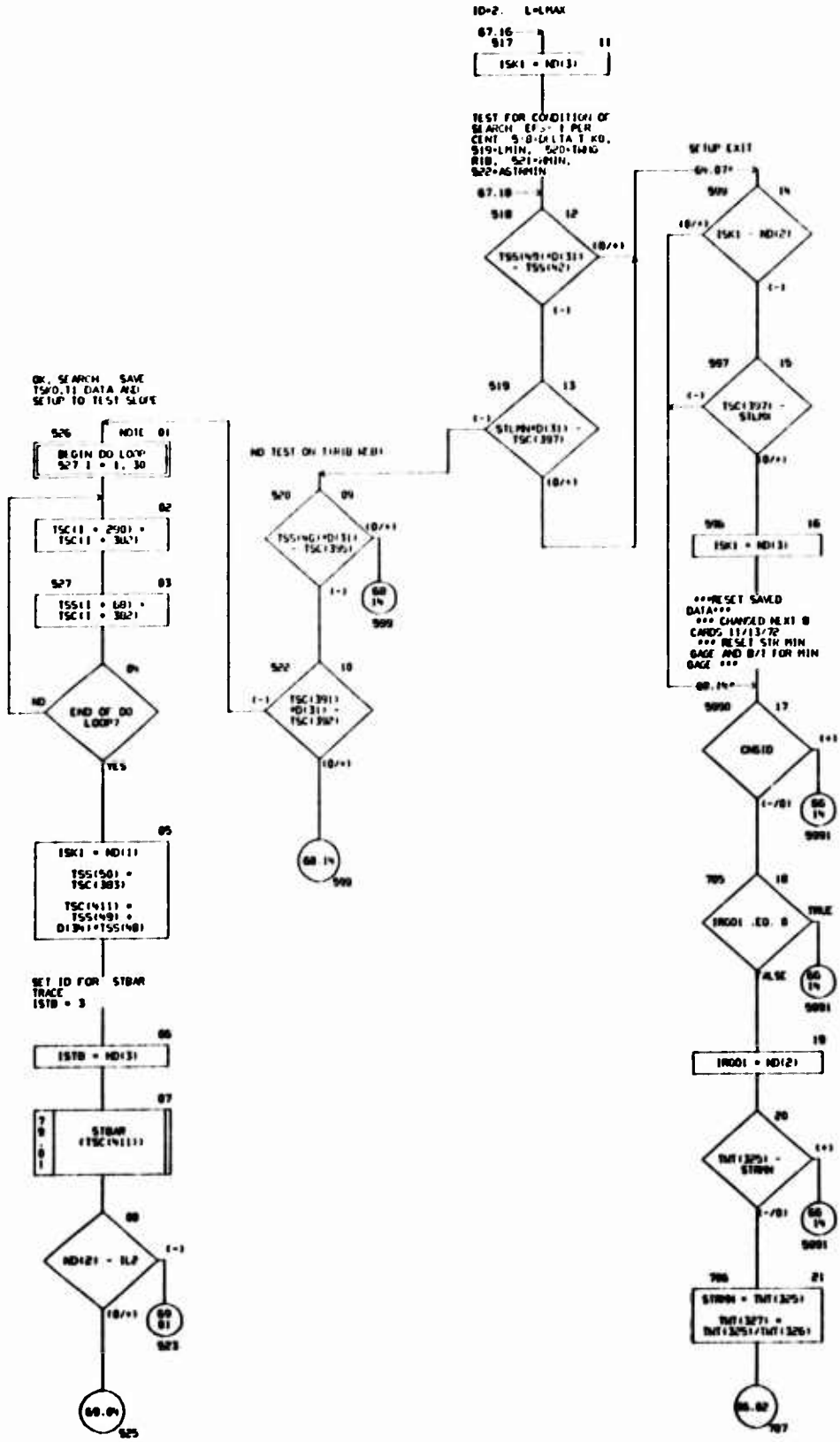

CHART TITLE - SUBROUTINE TSCHISEC(I)

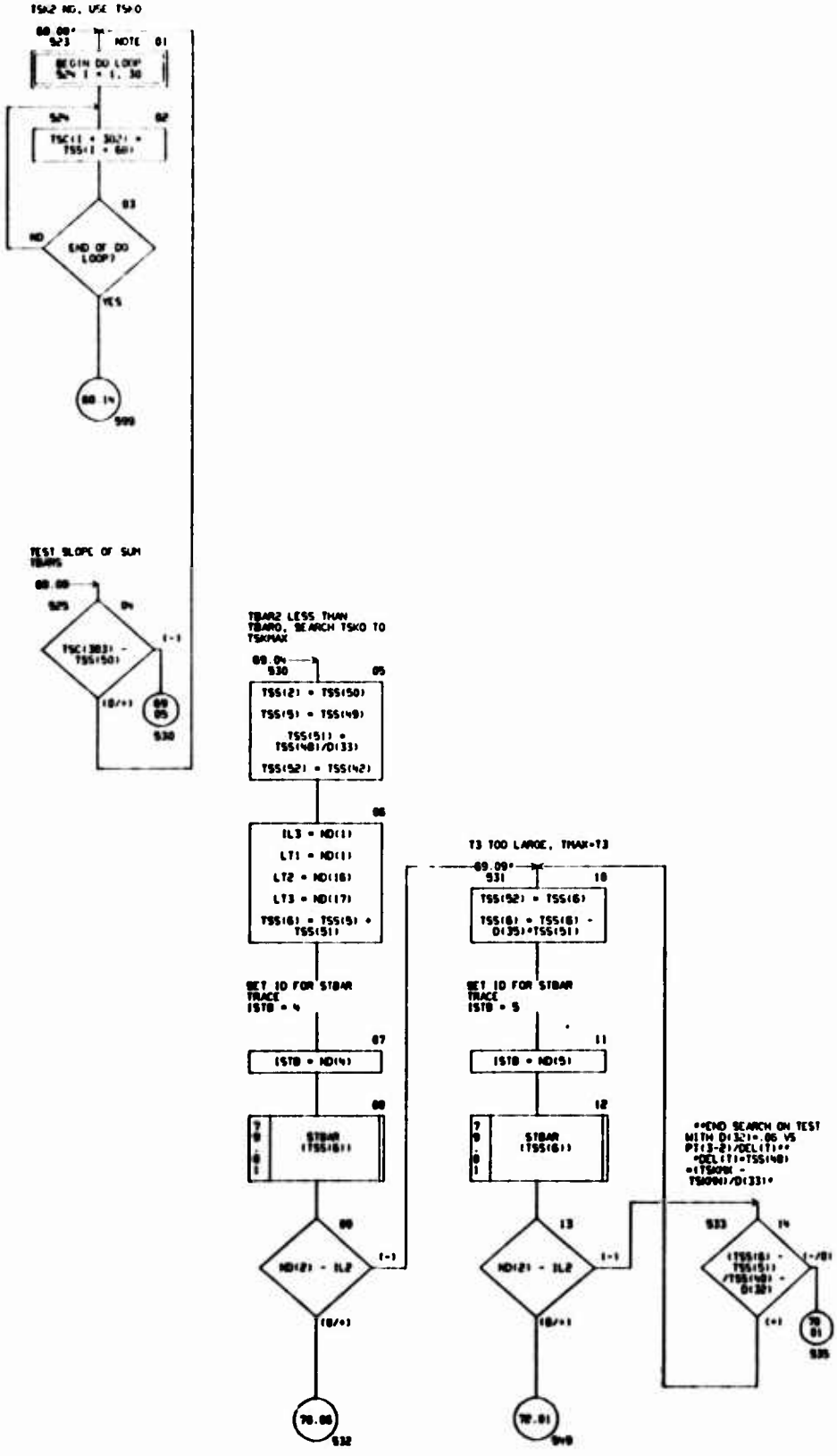

CHART TITLE - SUBROUTINE TSCHISFCI)

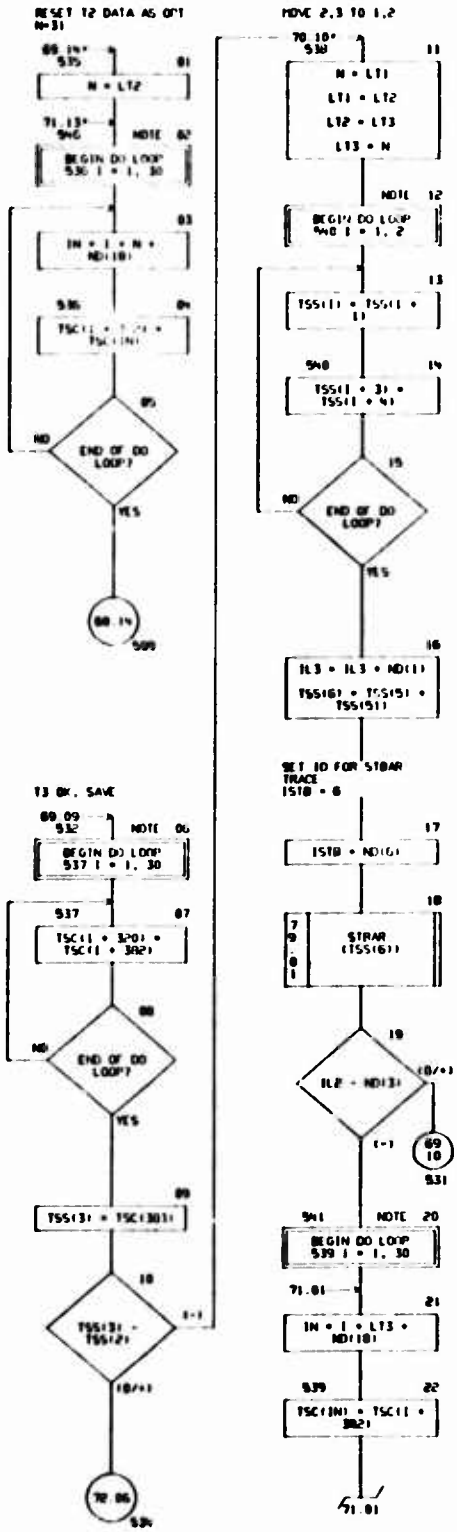

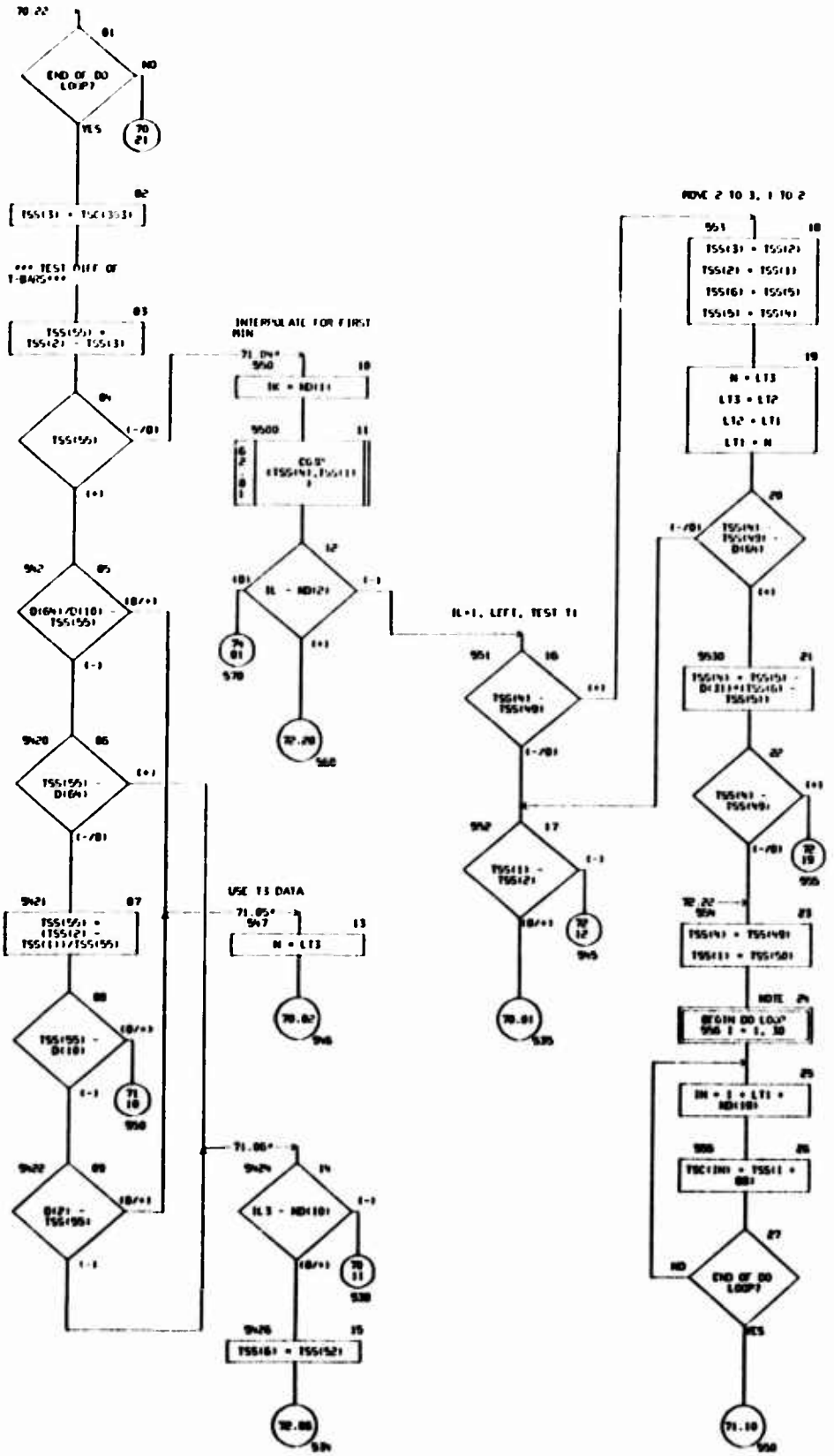
END OF DO LOOP?
YES
NO
*** TEST DIFF OF T-BARS***
INTERPOLATE FOR FIRST MIN
USE T3 DATA
IL=1, LEFT, TEST T1
MOVE 2 TO 3, 1 TO 2
BEGIN DO LOOP
END OF DO LOOP?

CHART TITLE - SUBROUTINE TSCHI5(C1)

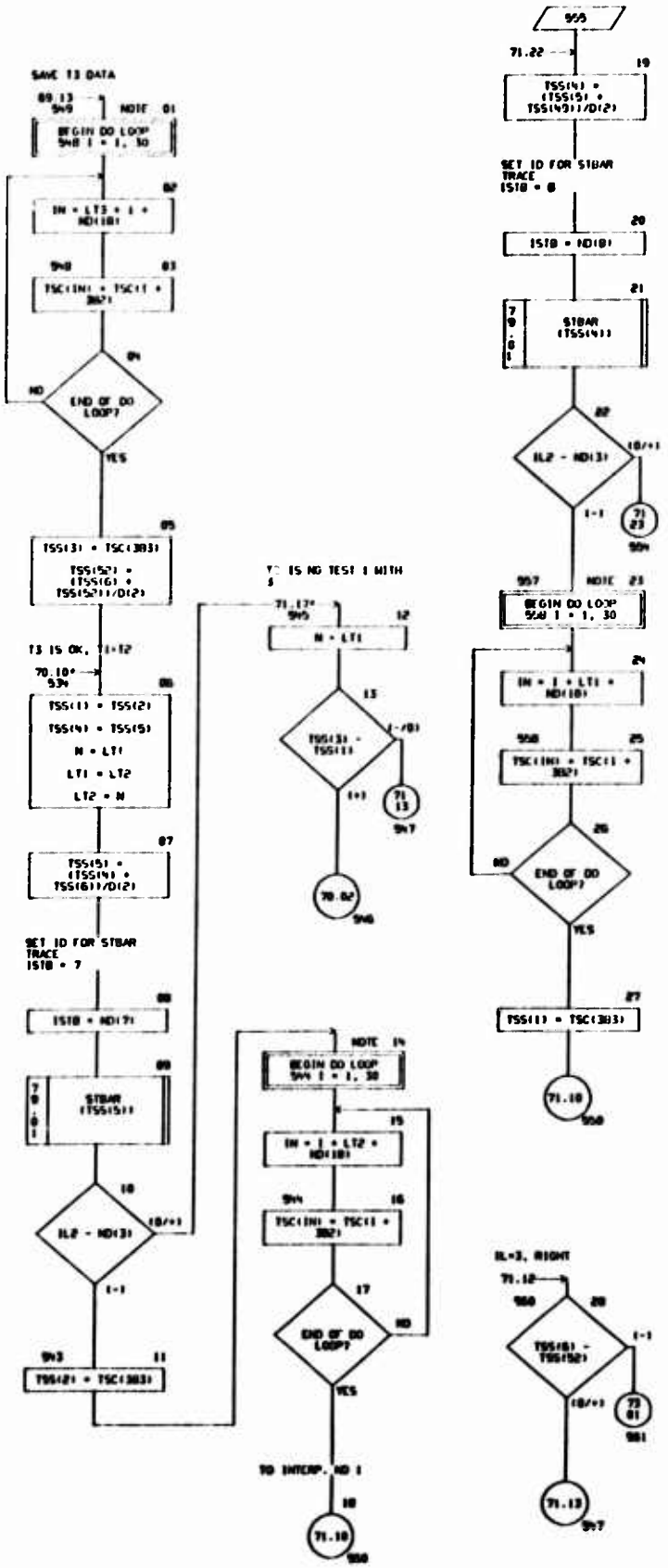

CHART TITLE - SUBROUTINE TSCH15(C1)

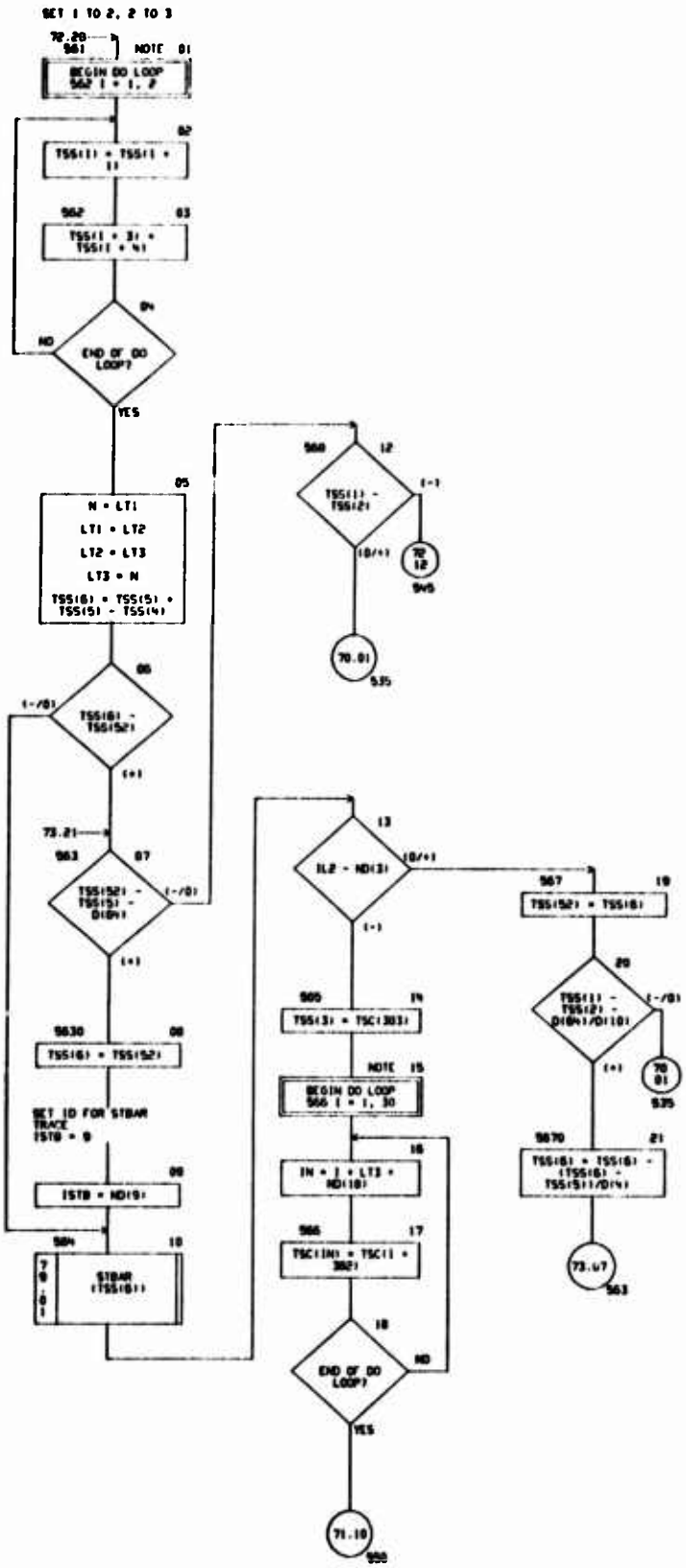

CHART TITLE - SUBROUTINE TSCH(SFC1)

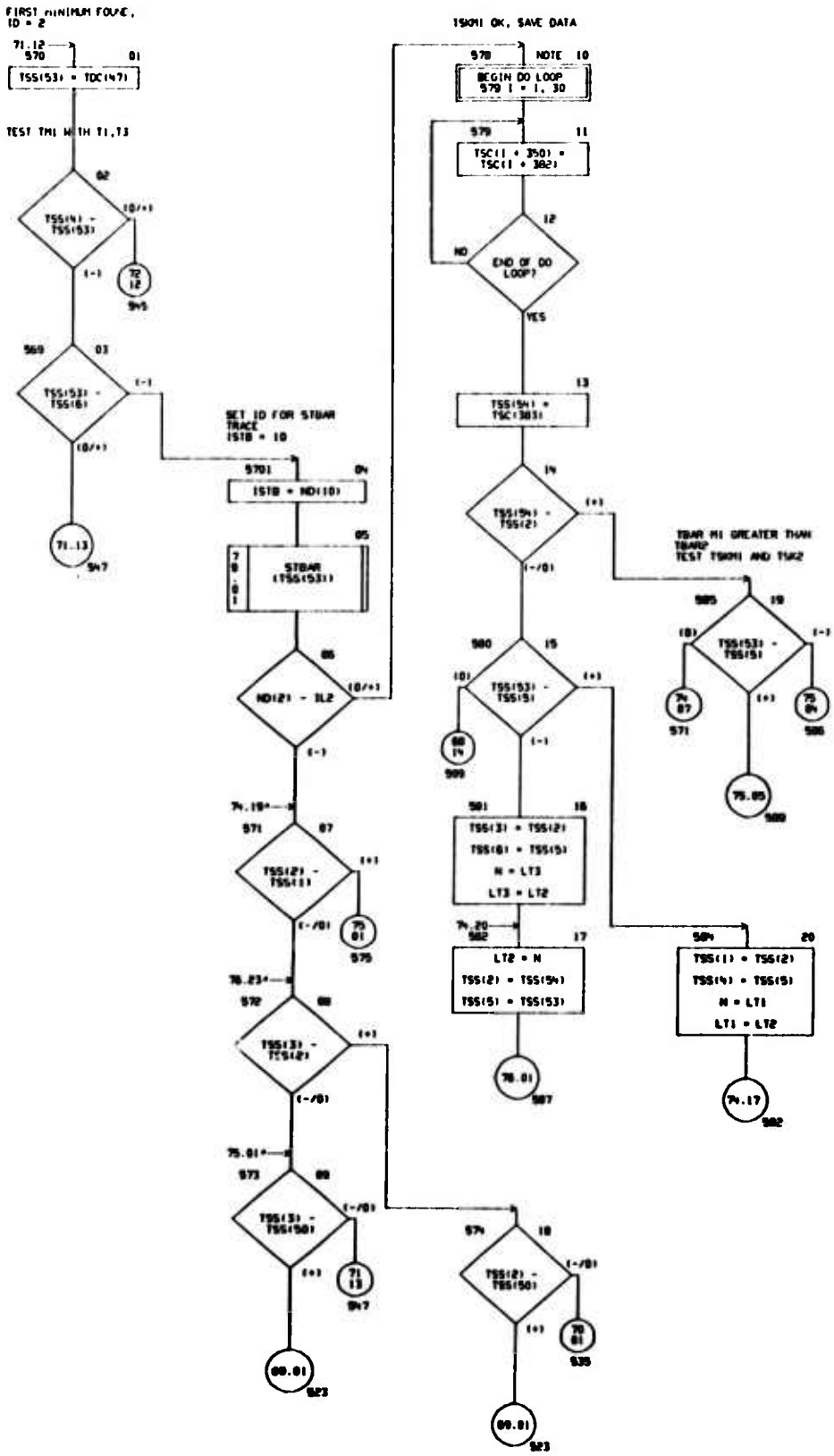

CHART TITLE - SUBROUTINE TSCH(SEC1)

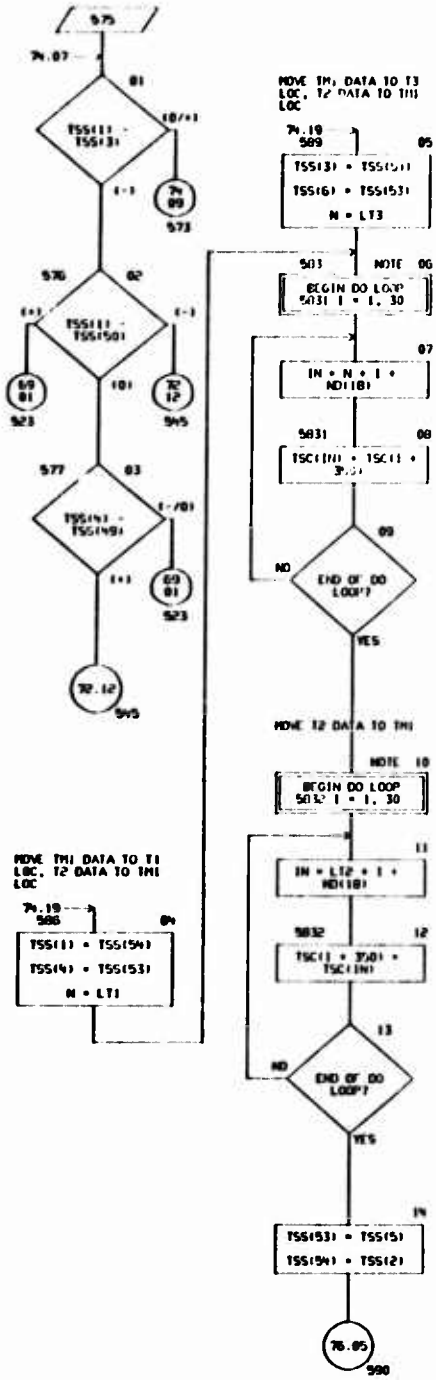

CHART TITLE - SUBROUTINE TSCHISEC(I)

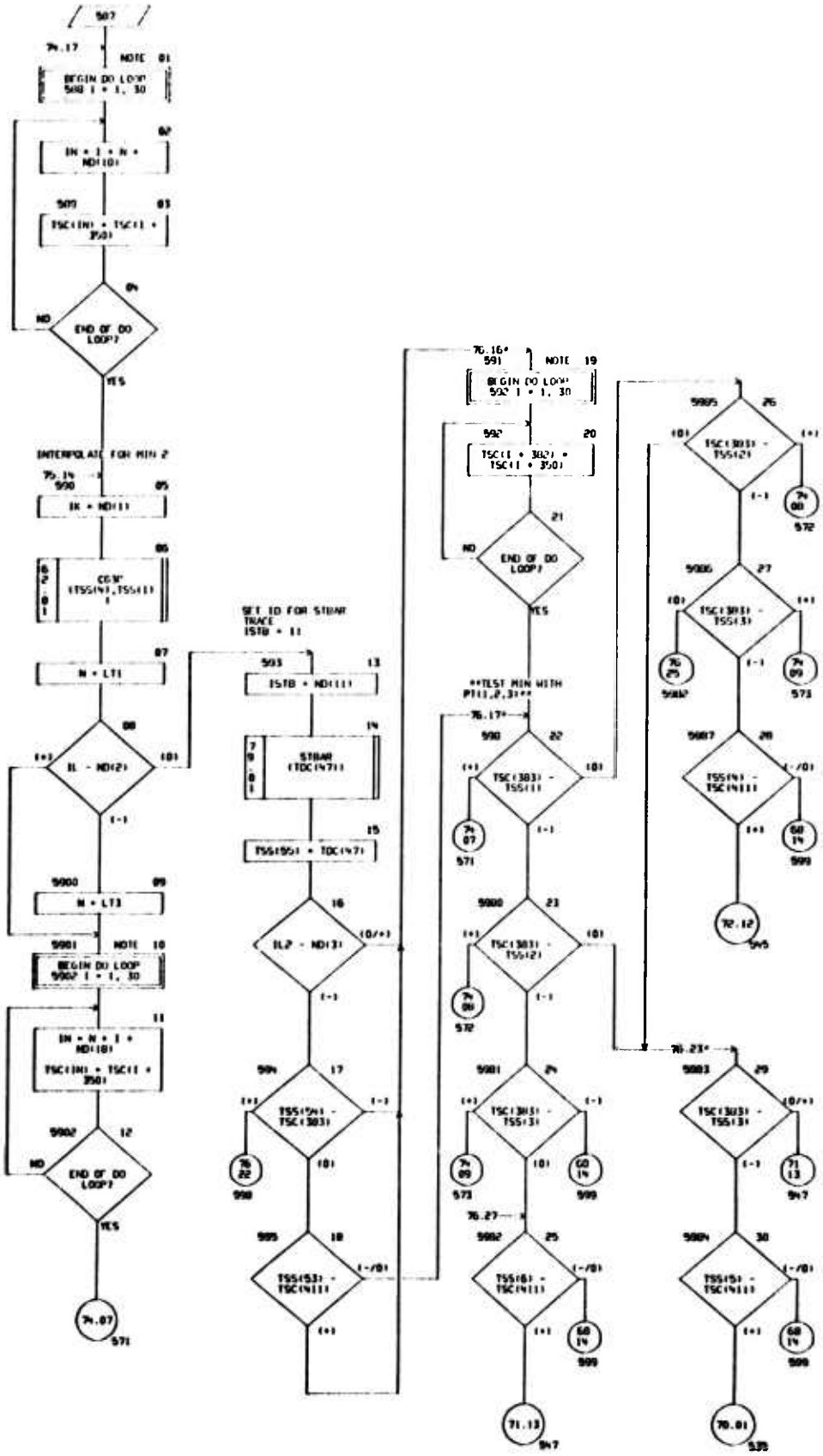

CHART TITLE - NON PROCEDURAL STATEMENTS

```
COMMON T(2060),D(2060),CD(2000),ND(100)
COMMON /IPRINT/ IP(80)
DIMENSION                                   DC(100),
TDC(200),TSC(420),TSS(100),TWT(400),TSEC(300),
DBKP(4)
EQUIVALENCE (TDC(1),T(1394)),(TSC(1),T(1594)),(TSS(1),T(1961)),
(DC(1),D(140)),(TWT(1),CD(110)),(TSEC(1),CD(150)),
(DBKP(1),D(574)),(STRFN,D(36)),(SKPN,D(370)),(STRPN,D(371)),
(STLMN,D(375)),(STLPX,D(376)),(HSTMN,D(377)),(STFMN,D(384)),
(CNSID,D(46)),(TKXMX,TDC(65)),(TKXMN,TDC(64)),(STRSK,D(455)),
(BOTMR,TSEC(248)),(BOTFR,TSEC(249)),(BOTHC,TSEC(250)),
(BOTFC,TSEC(251)),(CCRSH,TSEC(252)),(CCRSF,TSEC(253)),
(IDSK,ND(51)),(ISK2,ND(46)),(ISK1,ND(45)),(IL,ND(40)),(IK,ND(39)),
(IL1,ND(34)),(IL2,ND(33)),(IL3,ND(32)),(IBT,ND(72)),(IMX,ND(7)),
(LT1,ND(26)),(LT2,ND(27)),(LT3,ND(28)),(ISTB,ND(8)),(IN,ND(30))
,(I,ND(29)),(N,ND(3))
```

CHART TITLE - INTRODUCTORY COMMENTS

```
*****************************************************************

      *****SUBROUTINE STBAR*****
   ***T-BAR EVALUATION FOR TOTAL COVER/SUPT STRUCTURES***

*****************************************************************
```

CHART TITLE - SUBROUTINE STORAGE(I)

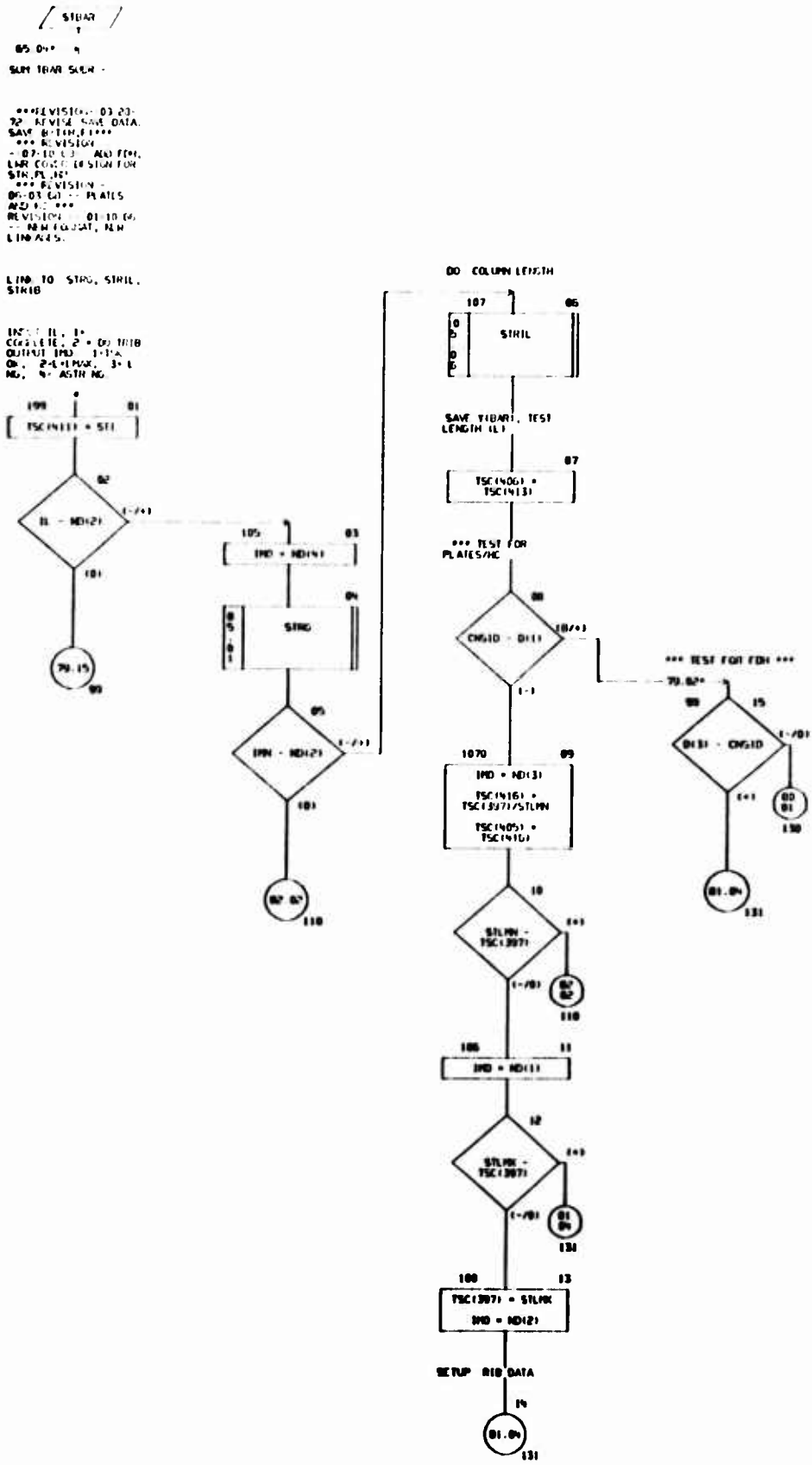

CHART TITLE - SUBROUTINE SIDAR(S1)

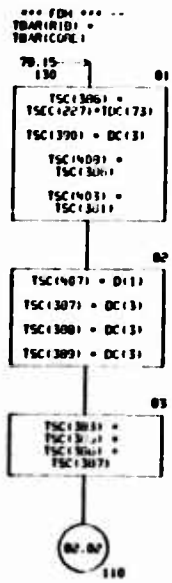

CHART TITLE - SUBROUTINE STBAR(STI)

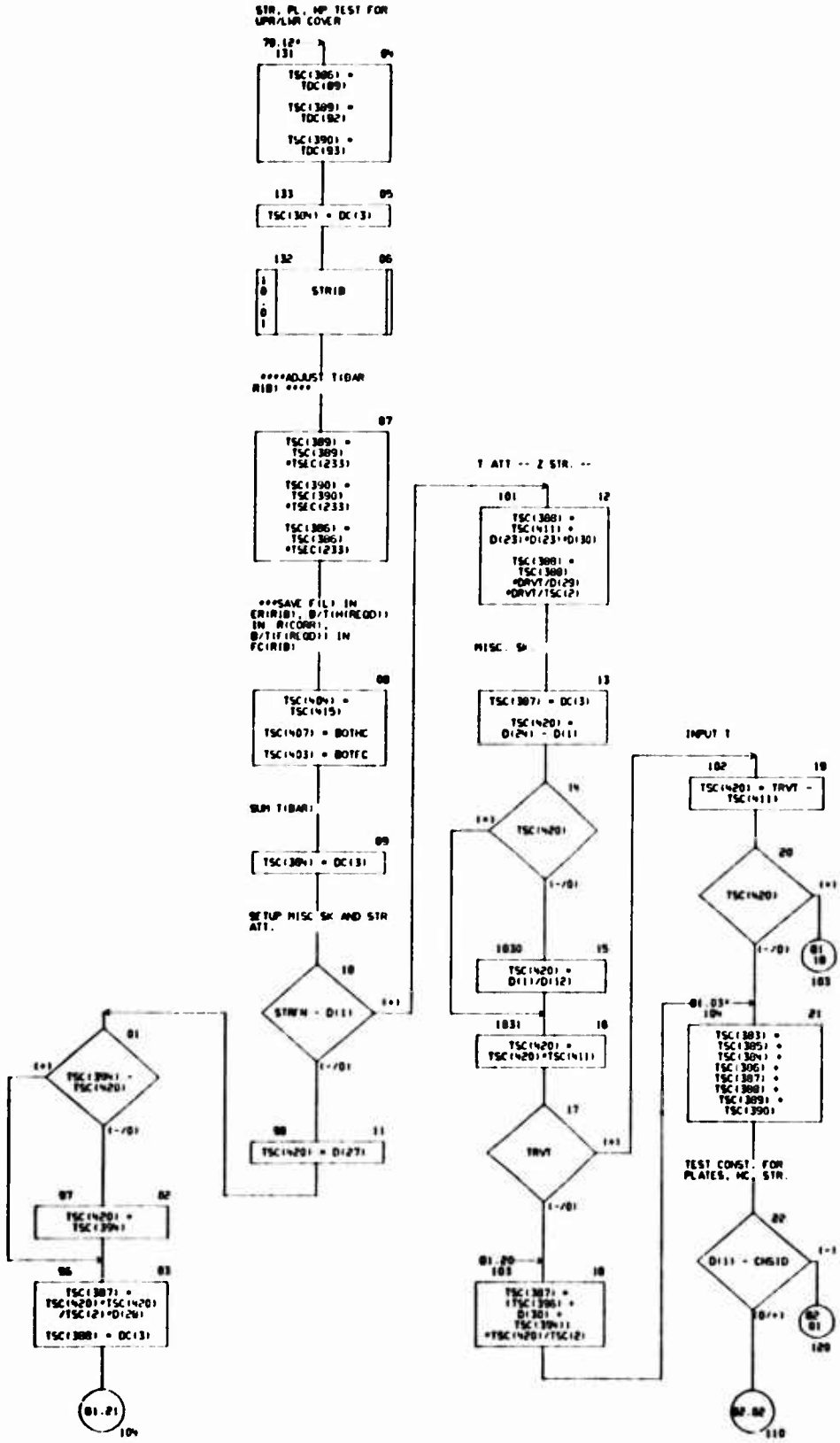

CHART TITLE - SUBROUTINE STBAR(STI)

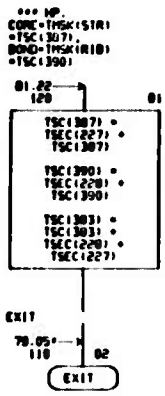

CHART TITLE - NON PROCEDURAL STATEMENTS

```
COMMON T(2000),D(2000),CD(2000),ND(100)
DIMENSION                                    DC(100),
TDC(200),TSC(N200),TSS(100),TSEC(300),TWT(N00)
EQUIVALENCE (TDC(1),T(1N)),(TSC(1),T(1N5)),(TSS(1),T(1N9))
EQUIVALENCE (TWT(1),CD(110)),(TSEC(1),CD(150))
EQUIVALENCE (DC(1),D(1N0)),(STRFN,D(3)),(STLPX,D(37)),
(STLPM,D(37)),(TRVT,D(37)),(DRVT,D(3)),(CN,ID,D(N6)),
(BDTHC,TSEC(2,0)), (BDTFC,TSEC(25)),
(DTC,D(N6)),(DCFSD,D(N6)),(D(N6)),(D(N6)),(D(N6))
EQUIVALENCE (DN,ND(35)),(DL,ND(N)),(DN,ND(33))
```

CHART TITLE - INTRODUCTORY COMMENTS

```
*****************************************************************

      *****SUBROUTINE STRG*****
   ***OPTIMUM STRINGER RATIO DIST - GEOMETRY EVALUATION***

*****************************************************************
```

CHART TITLE - SUBROUTINE STRG

STRG

70.04

STRINGER GEOMETRY
SUBROUTINE

REVISION -11-30-72--
ADD SOLUTION EQUATION
ID NO=STATEMENT
NO.***
***REVISION--05-14-
70--ADD DETAIL
SECTION SEARCH PRINT.
ID=D(57+)*
***REVISION 11-13-
69--CORRECT K(STR)
LOGIC.
SW:D(45)1,K2+D(45)6)**
***REVISION--04-05-
69--REVISE T(STR) MIN
LOGIC:F(TSK) ***
*** REVISION --
07-10-68 -- ADD
FDN ***
REVISION--05-17-60--
TEMP FIX FOR PLATES
(METHOD A)
ID=D(46)1+CNSTD. NO
PAD AT SPAR LINE.
CONSTANT CAP AREA

***(STRG NO TYPE
REGION T-STR
H-STR F-LWR
F-LWR
(1) 98 21,22
1,3 OPT OPT
OPT OPT
(2) 95 21,22
1,3 OPT OPT
MAX MAX
(3) 129 21,22
1,3 OPT MAX
OPT OPT
(4) 112 21,22
1,3 OPT OPT
MIN OPT
(5) 123 22
1,3 OPT MAX
MIN OPT
95 21 1,3
FMN/T/T T+H/T 0
FMAX
110 21 1,3
MMX/H/T MMAX 0
T+F/T
122 21,22 1,3
FMN/T/T MMAX
FMIN FMIN
/T 125 22
1,3 FMN/T T+H/T
FMAX FMAX
/T 127 22
1,3 MMX/H MMAX
+FL T+F/T
141 21,22 1,3
FMN/T/T T+H/T
FMIN FMIN
102 21 2,3
TMD MIN 0
L-H
104 21,22 2,3
TMD MIN +FL
+FU
105 21,22 2,3
TMD MIN MIN
L-H-FU
106 21,22 2,3
TMD L-FU-FL MAX
MAX
73 ALL ALL
**STR AREA TOO
SMALL**
76 ALL ALL
TMD MIN MIN
MIN
100 21,22 1,2,3
A/L/MAX MAX
MAX MAX
107 21,22 1,2,3
AMIND AMIND
AMIND AMIND
03 1 1,3
OPT OPT 0
0
05 1 1,2,3
A/H MAX 0
0
07 1 1,2,3
TMD A/T 0
0

REVISION -- 01-10-68
-- NEW FORMAT, NEW
LINKAGE

T SKIN = VARIABLE,
FC=CONSTANT
IN=1 OK
IN=2 NO

**PRINT T(SK),
ASTRMIN DATA. IN=2.
BLOCK 2 **

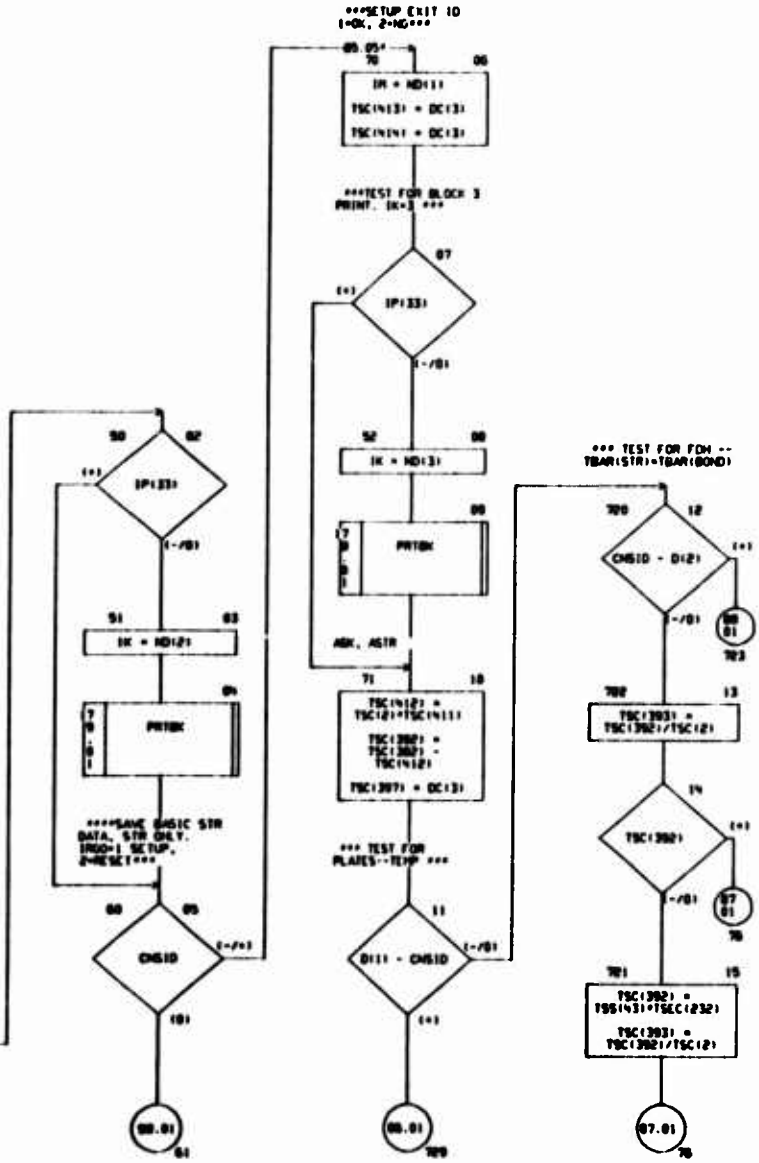

CHART TITLE - SUBROUTINE STRG

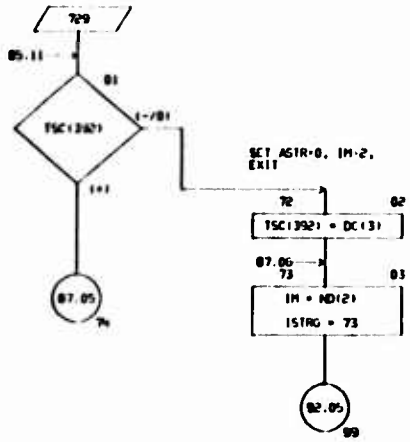

CHART TITLE - SUBROUTINE STRG

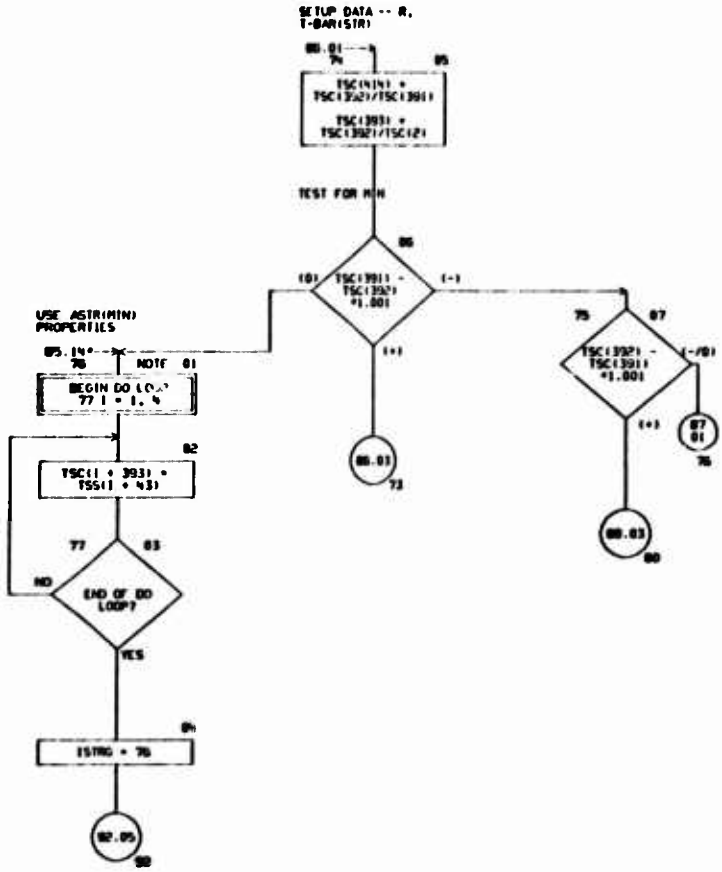

CHART TITLE - SUBROUTINE STRG

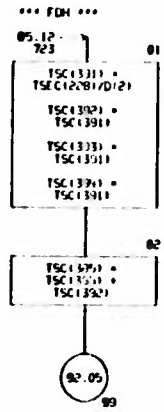

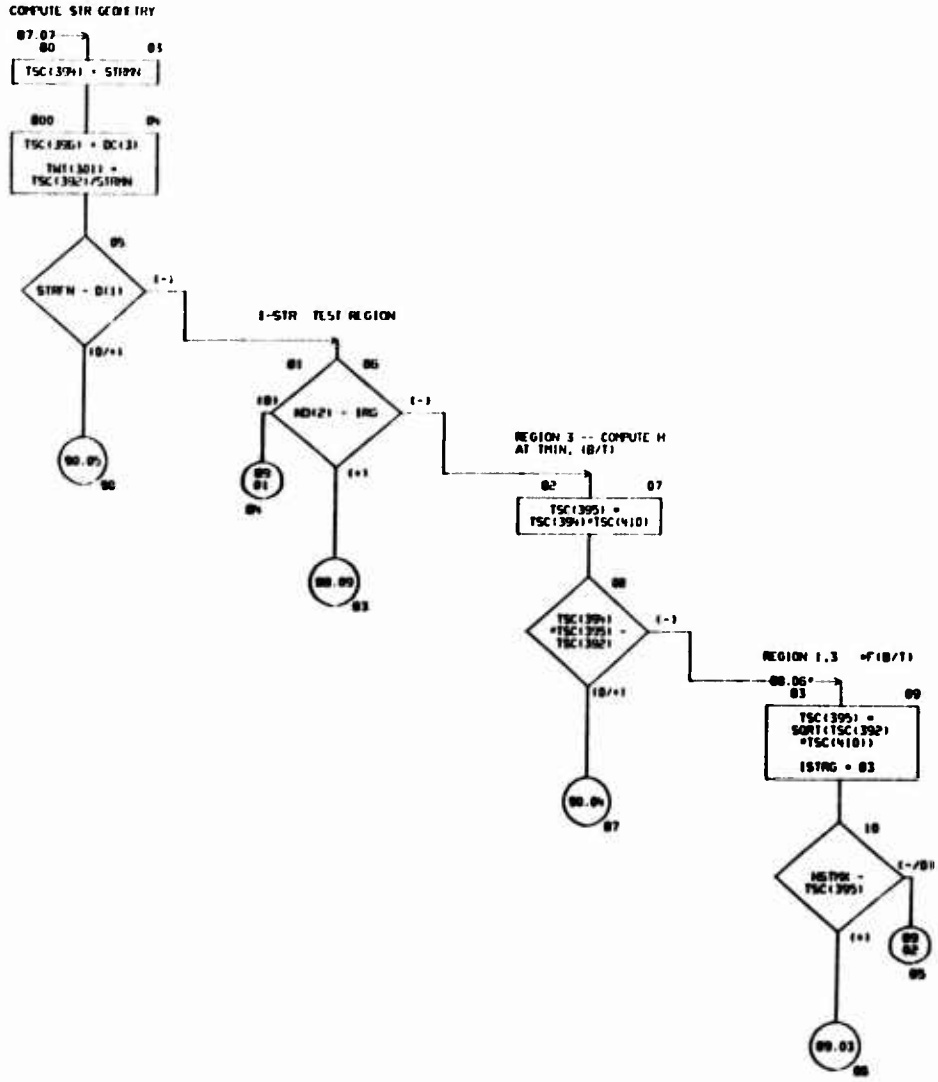

CHART TITLE - SUBROUTINE STRG

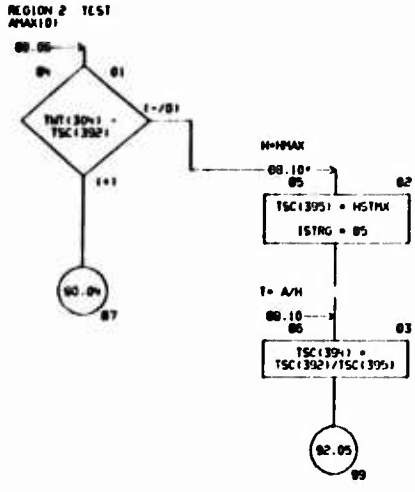

CHART TITLE - SUBROUTINE STRG

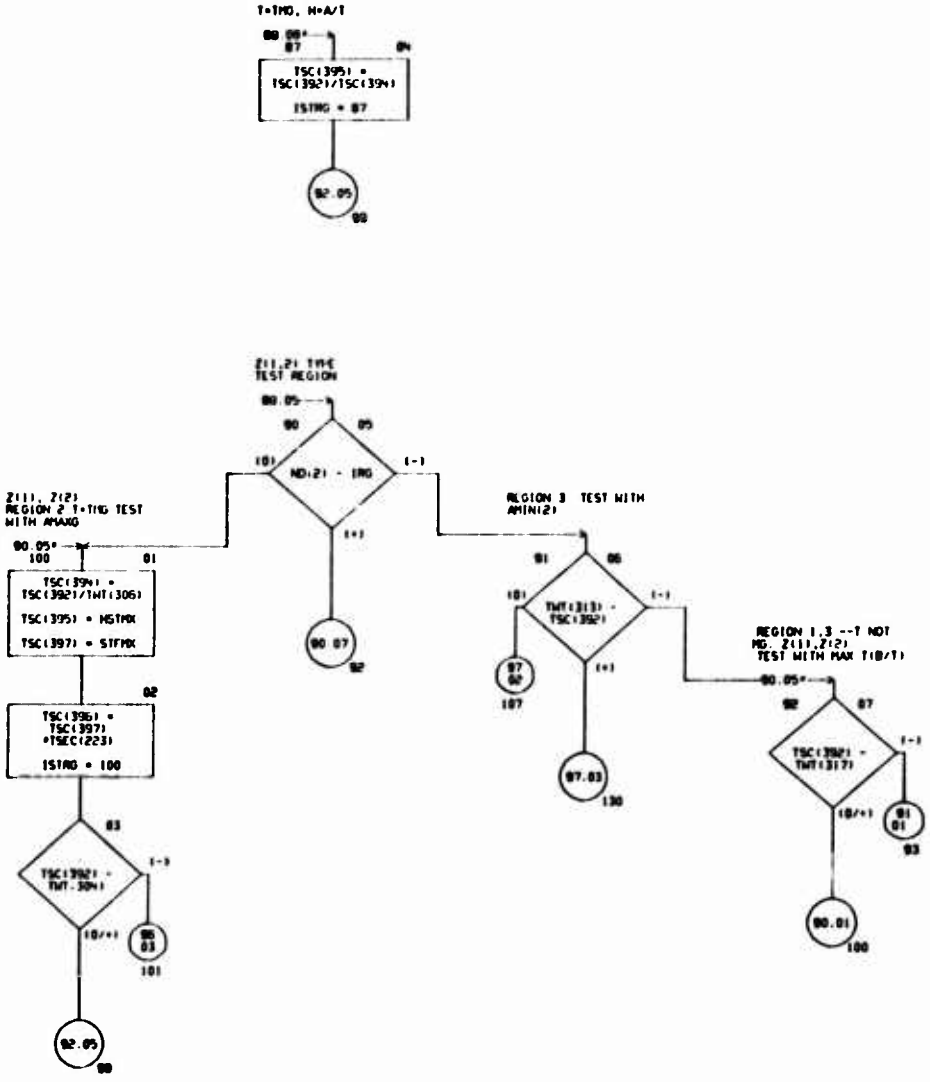

CHART TITLE - SUBROUTINE STRG

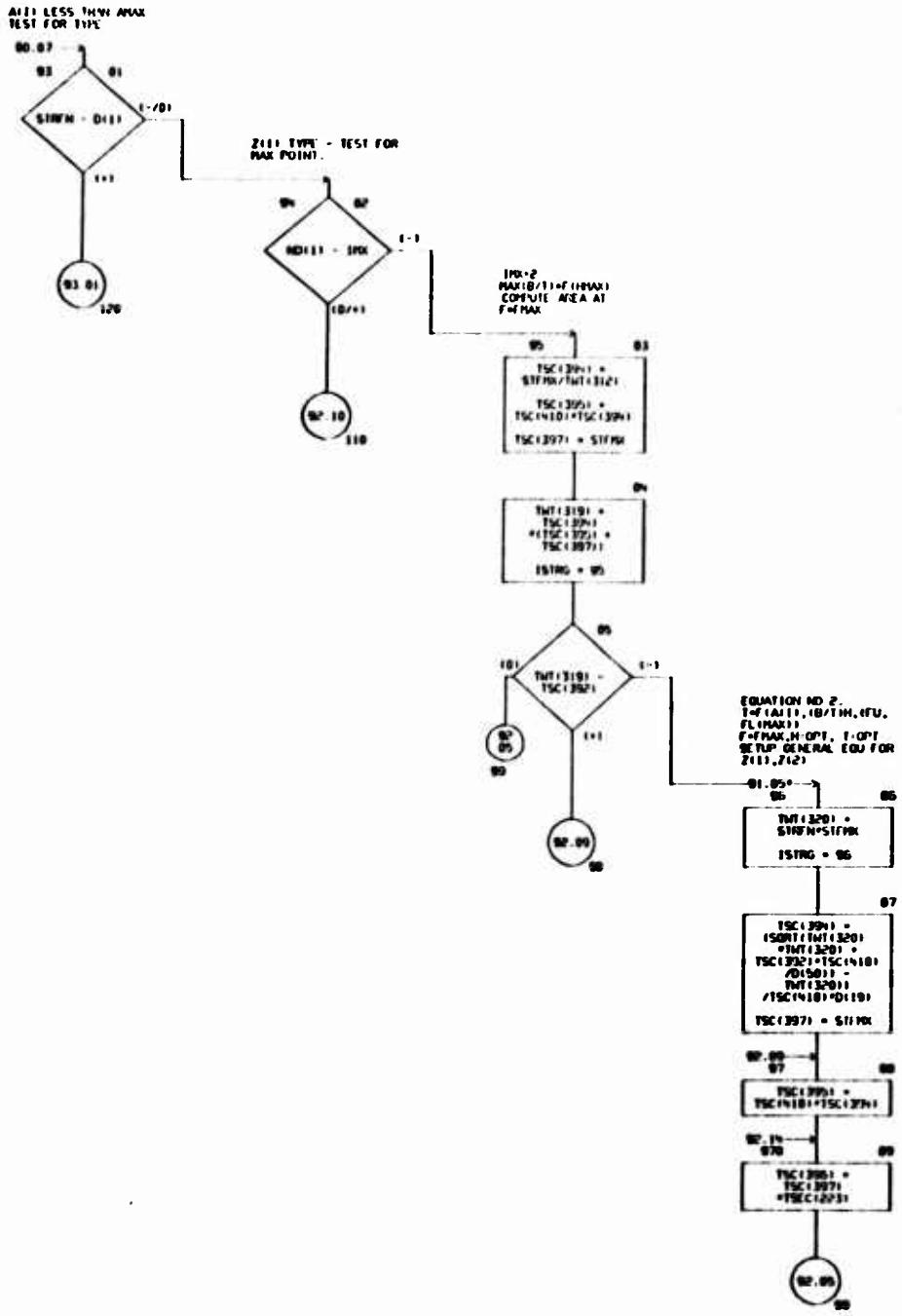

CHART TITLE - SUBROUTINE STRG

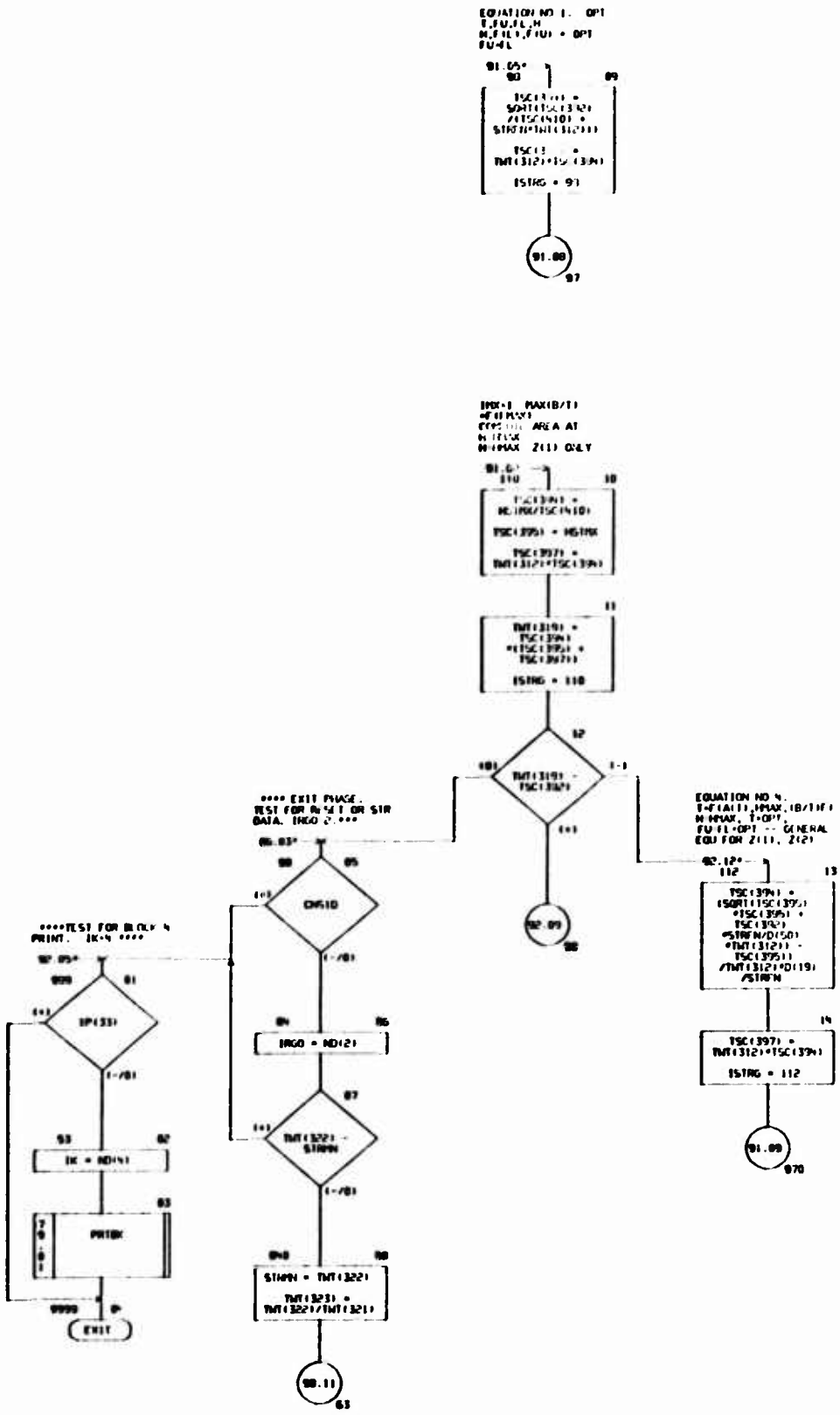

CHART TITLE - SUBROUTINE STRG

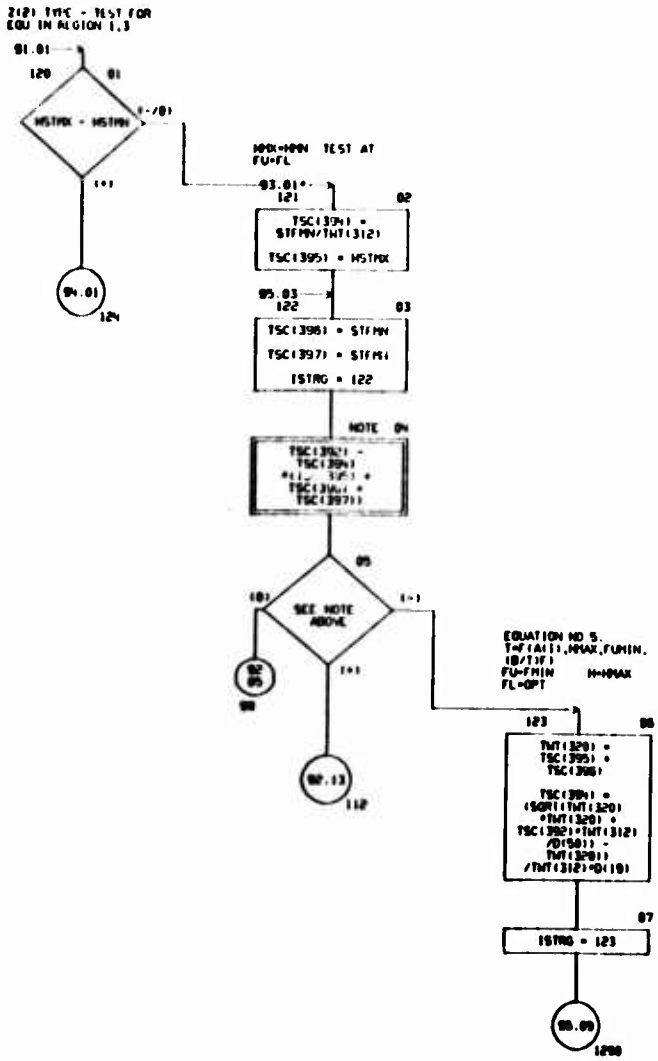

CHART TITLE - SUBROUTINE STRG

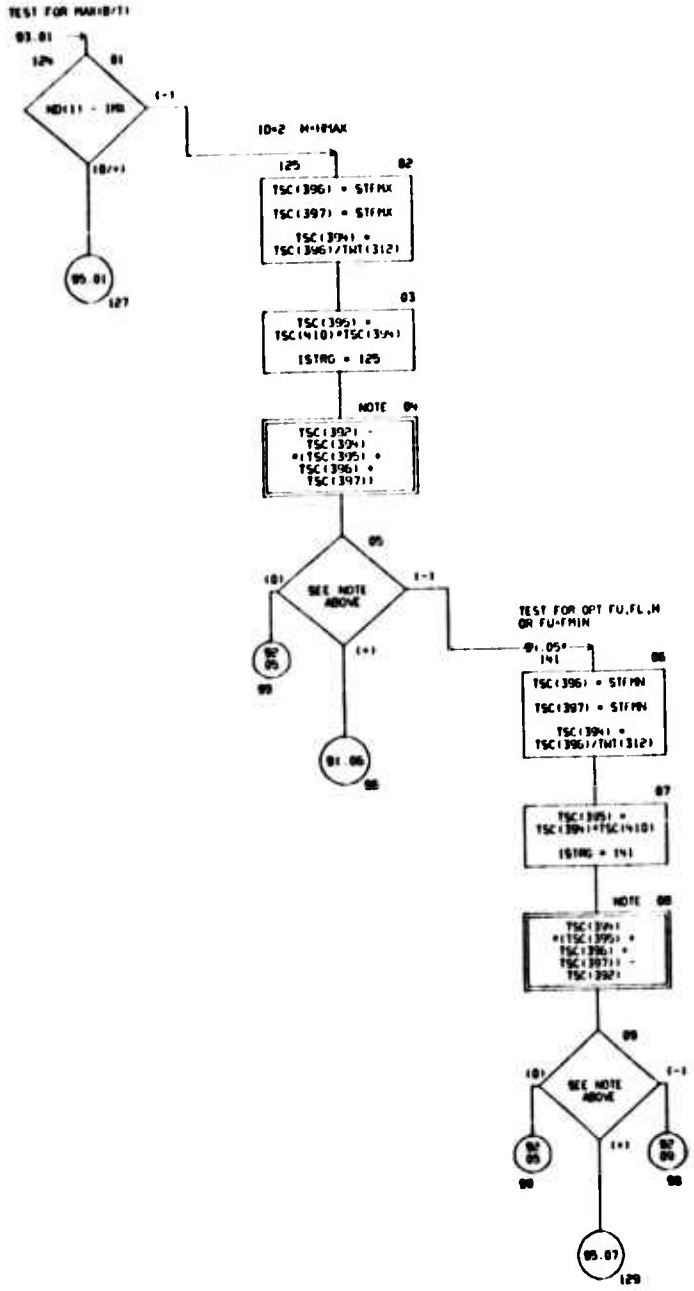

CHART TITLE - SAFP STING STAG

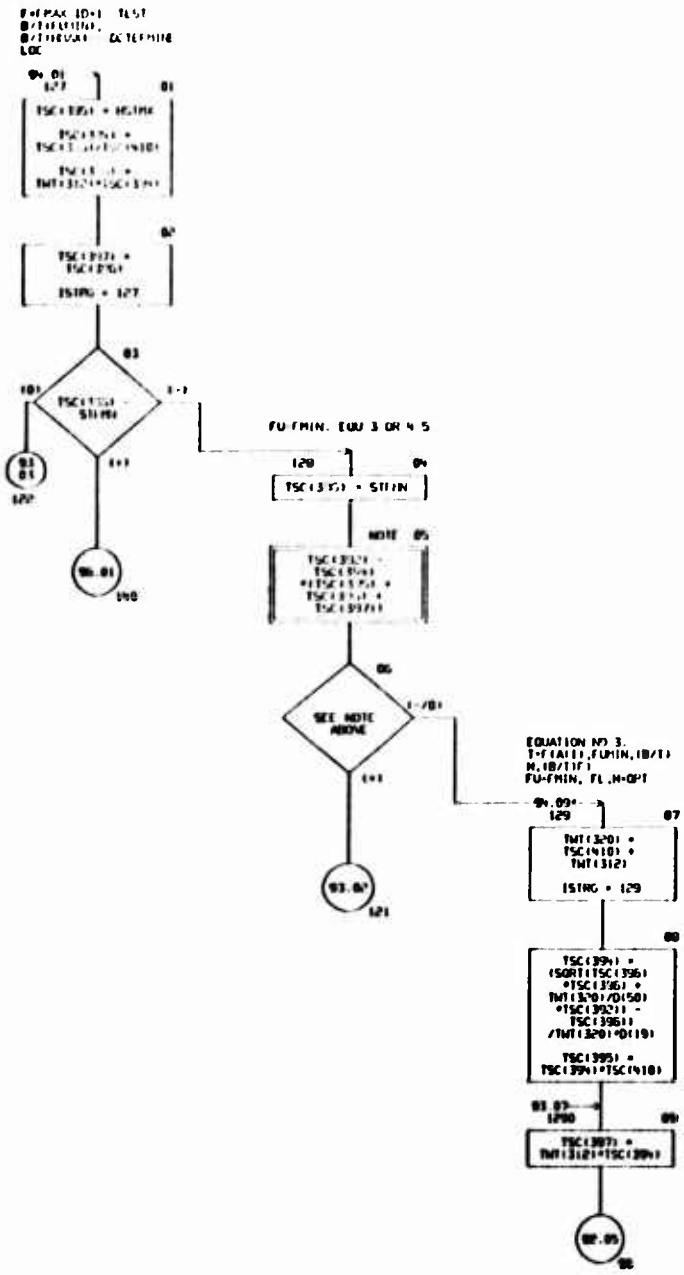

CHART TITLE - SUBROUTINE STRG

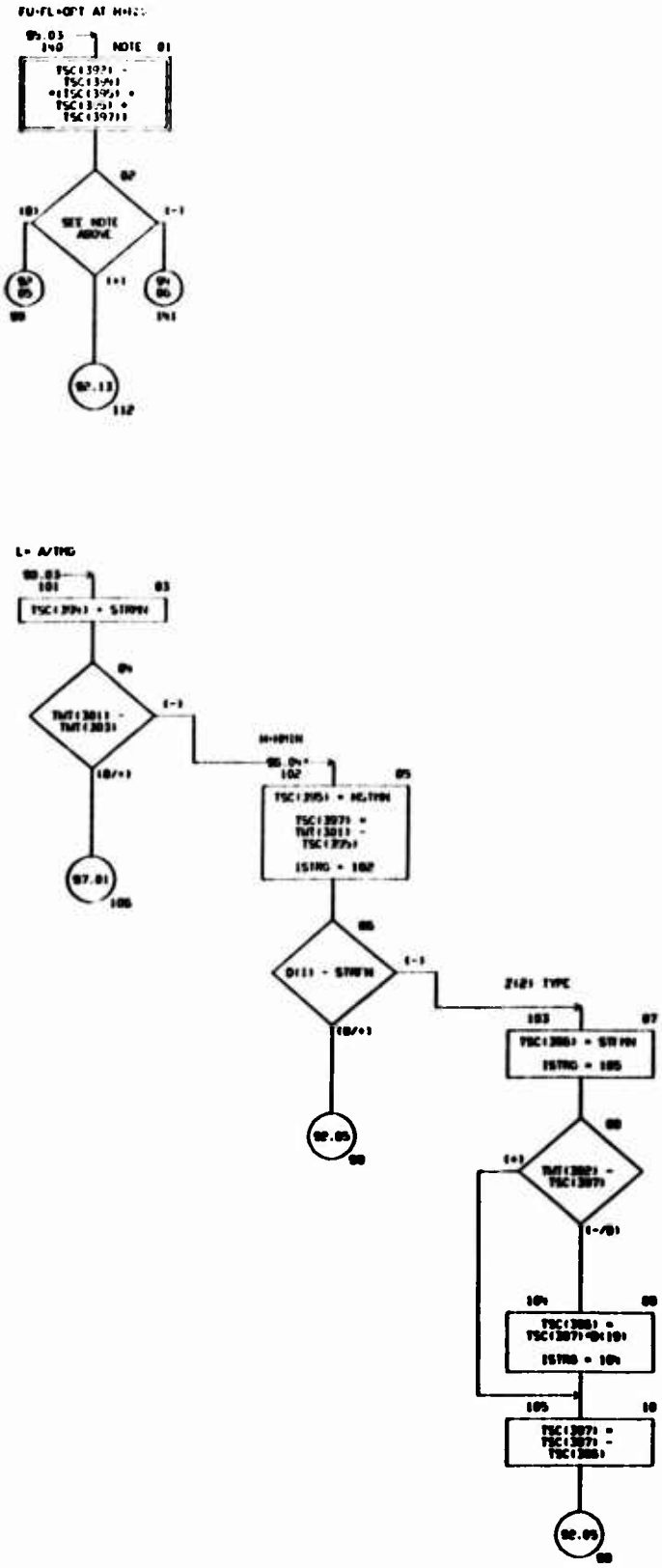

CHART TITLE - SUBROUTINE STRG

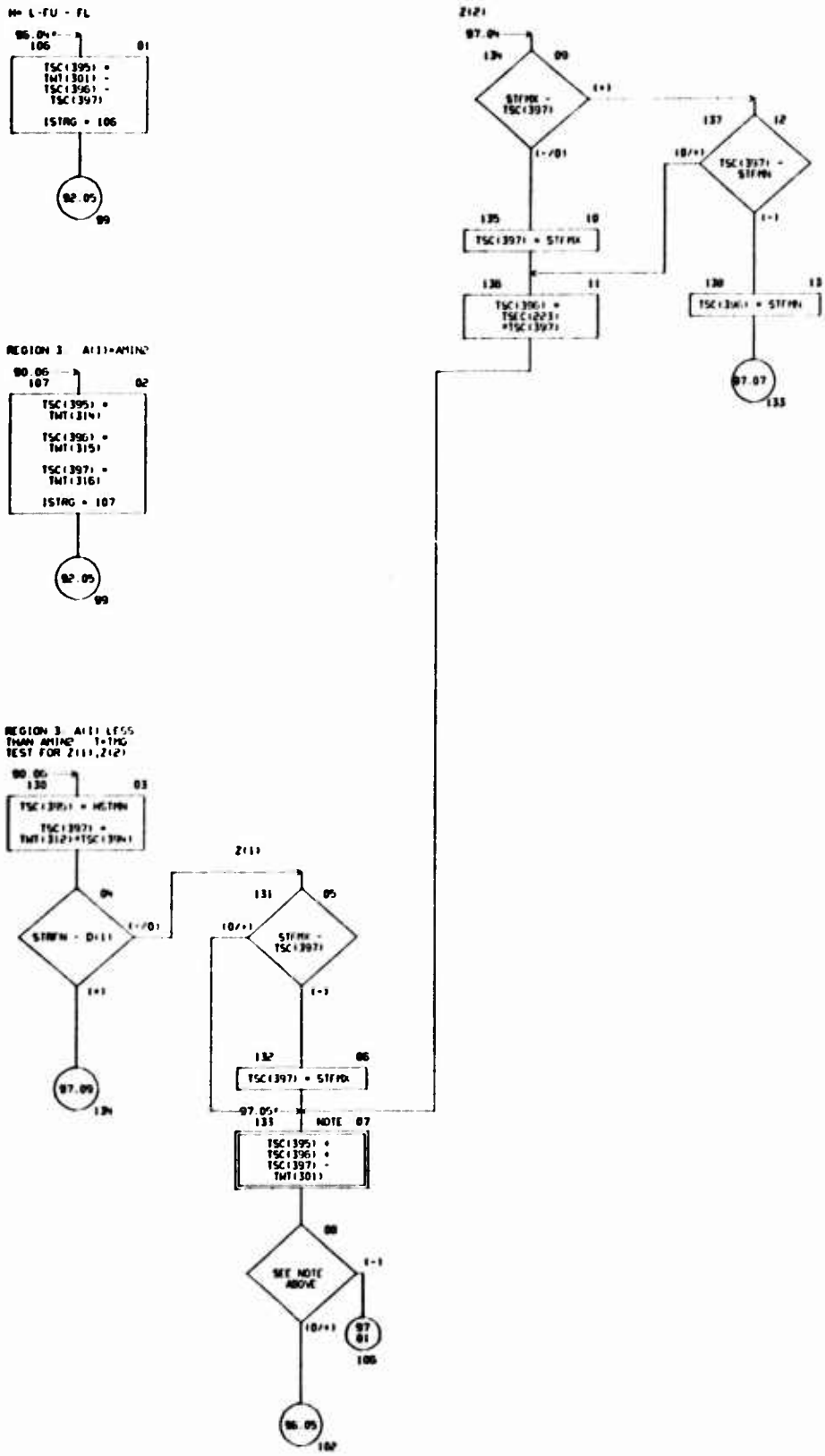

CHART TITLE - SUBROUTINE STRG

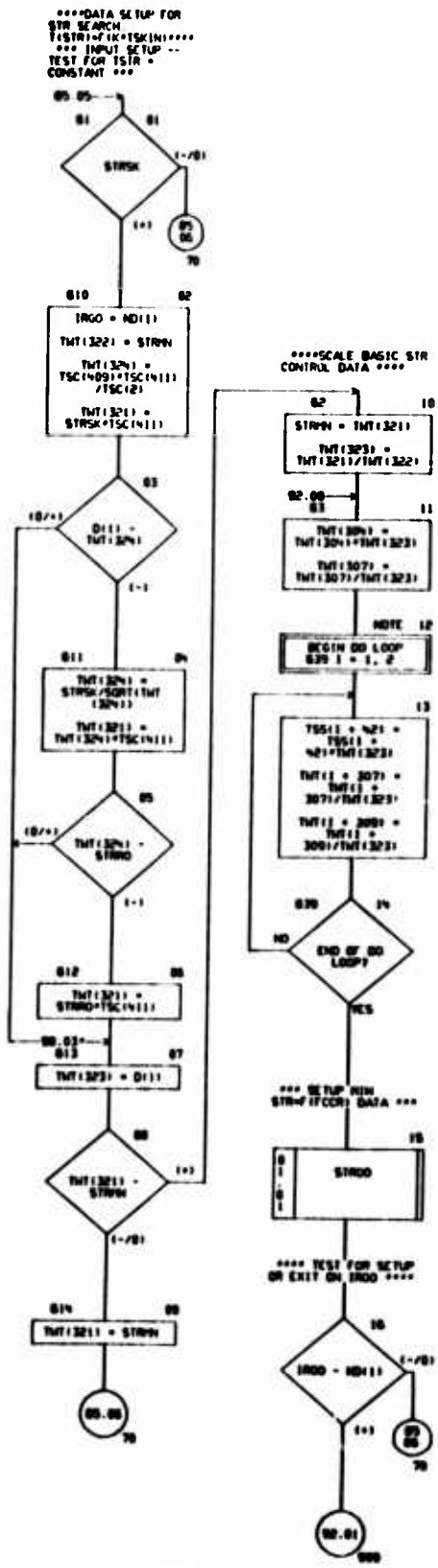

CHART TITLE - NEW PROCEDURAL STATEMENTS

```
COMMON T(20000),D(25000),CD(20000),ND(1000)
COMMON /IPRINT/ IP(100)
DIMENSION                    DC(100),
TDC(200),TSC(420),TSS(100),TWT(400),TSLC(300),
DEBUP(4)
EQUIVALENCE (DC(1),T(1194)),(TSC(1),T(1194)),(TS(1),T(1195))
EQUIVALENCE (DC(1),D(1401)),(STRIN,D(3)),(STRPN,D(37)),
(HSTPN,D(37)),(HSTMX,D(37)),(STFMX,D(37)),(STF(1),D(3)),
(STRHO,D(45)),              (STRP2,D(45)),(CNSID,D(46)),
(DEBUP(1),D(57))
EQUIVALENCE (TWT(1),CD(10)),(TSFC(1),CD(50))
EQUIVALENCE (IH,ND(3)),(IBT,ND(72)),(IHX,ND(71)),(IHG,ND(70)),
(IK,ND(3))
.   (ISTRG,ND(60))
```

CHART TITLE - INTRODUCTORY COMMENTS

```
*****************************************************************

      *****SUBROUTINE STIFFO*****
   ***STRINGER GEOMETRY - BOXRED/T INITIALIZATION***

*****************************************************************
```

CHART TITLE - SUBROUTINE STRGO

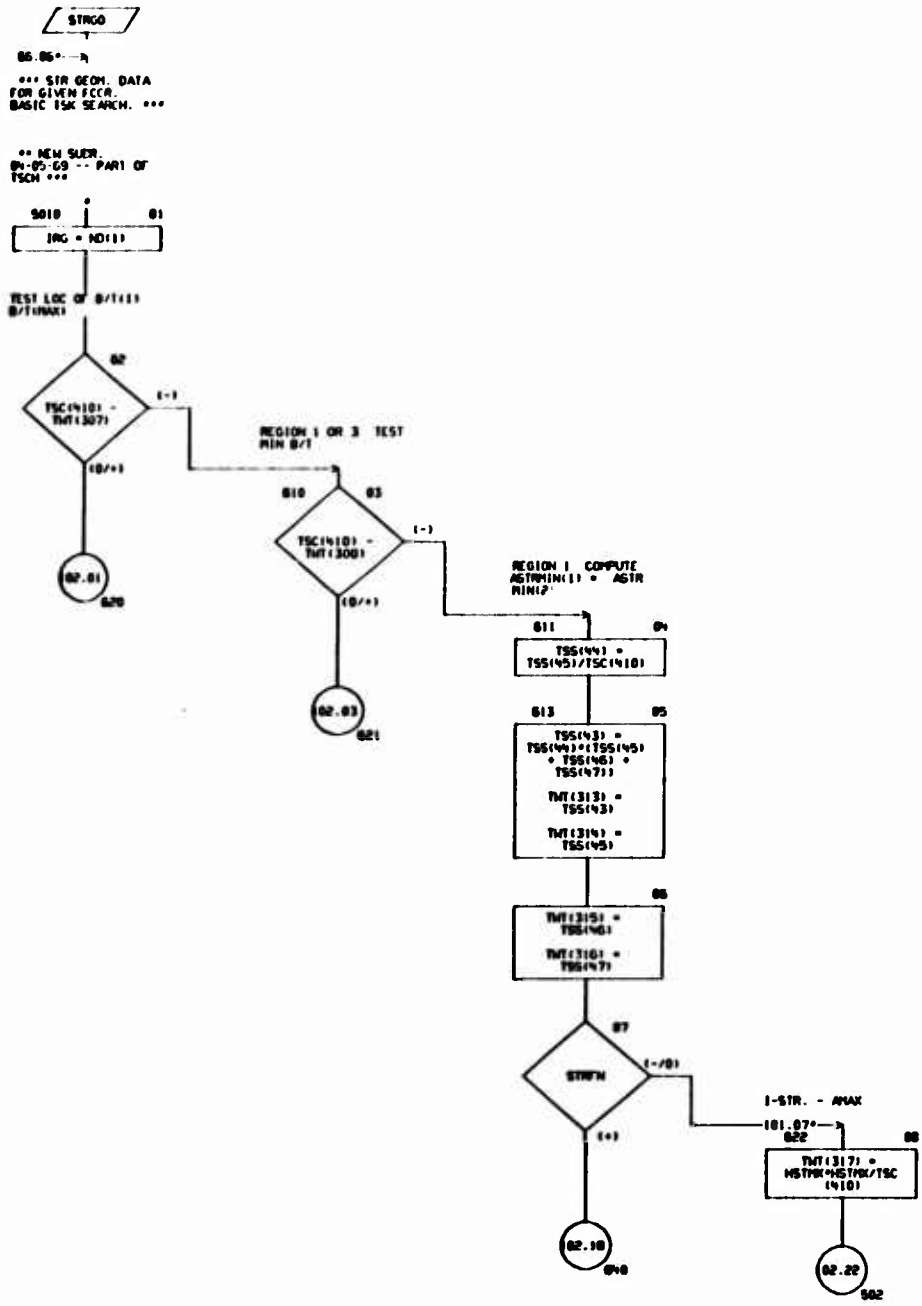

CHART TITLE - SUBROUTINE STRGO

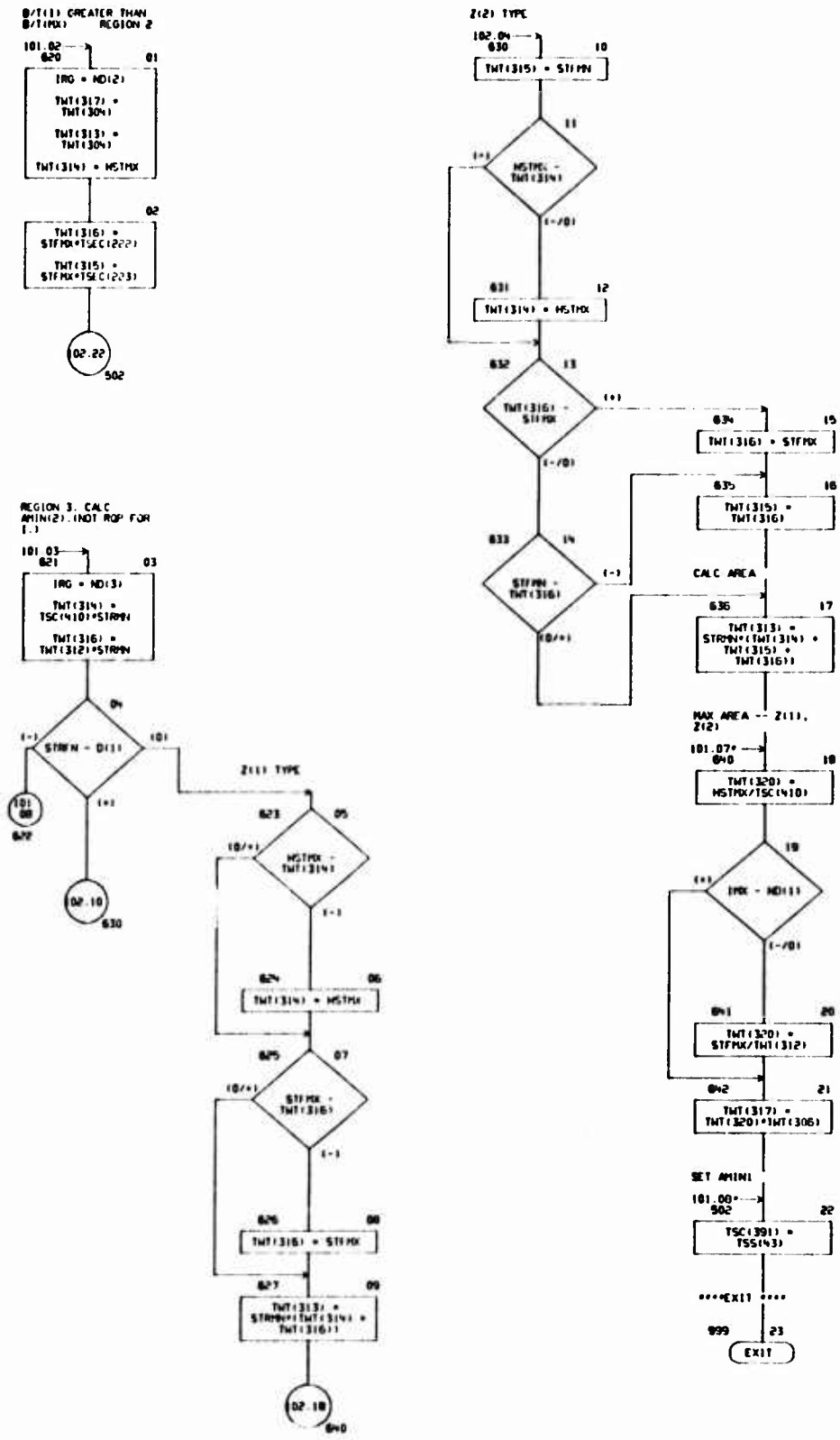

CHART TITLE - NON-PROCEDURAL STATEMENTS

```
COMMON T(2060),D(2060),CD(2000),ND(100)
DIMENSION                                   DC(100),
TDC(200),TSC(420),TSS(100),TWT(400),TSEC(350)
EQUIVALENCE (TDC(1),T(1134)),(TSC(1),T(1154)),(TSS(1),T(1196)),
(TKMX,T(1405)),(TDTH,T(1406))
EQUIVALENCE (DC(1),D(1401)),(STFMN,D(36)),(SFMN,D(370)),
(STRMN,D(371)),(RGMG,D(372)),(STLMN,D(375)),(STLMX,D(376)),
(HSTMN,D(377)),(HSTMX,D(378)),(STFMX,D(379)),(STFMN,D(380)),
(CNSID,D(46))
EQUIVALENCE (TWT(1),CD(1101)),(TSEC(1),CD(150))
EQUIVALENCE (ID2K,ND(51)),(ISK2,ND(46)),(ISK1,ND(45)),(IL,ND(40)),
(IK,ND(39)),(IL1,ND(34)),(IL2,ND(33)),(IL3,ND(32)),(IN,ND(31)),
(IN,ND(30)),(I1,ND(29)),(IT3,ND(28)),(IT2,ND(27)),(IT1,ND(26)),
(IBT,ND(72)),(IMX,ND(71)),(IRG,ND(70))
```

CHART TITLE - INTRODUCTORY COMMENTS

```
*****************************************************************

      *****SUBROUTINE STRIL*****
   ***STRINGER COLUMN LENGTH EVALUATION***

*****************************************************************
```

CHART TITLE - SUBROUTINE STRIL

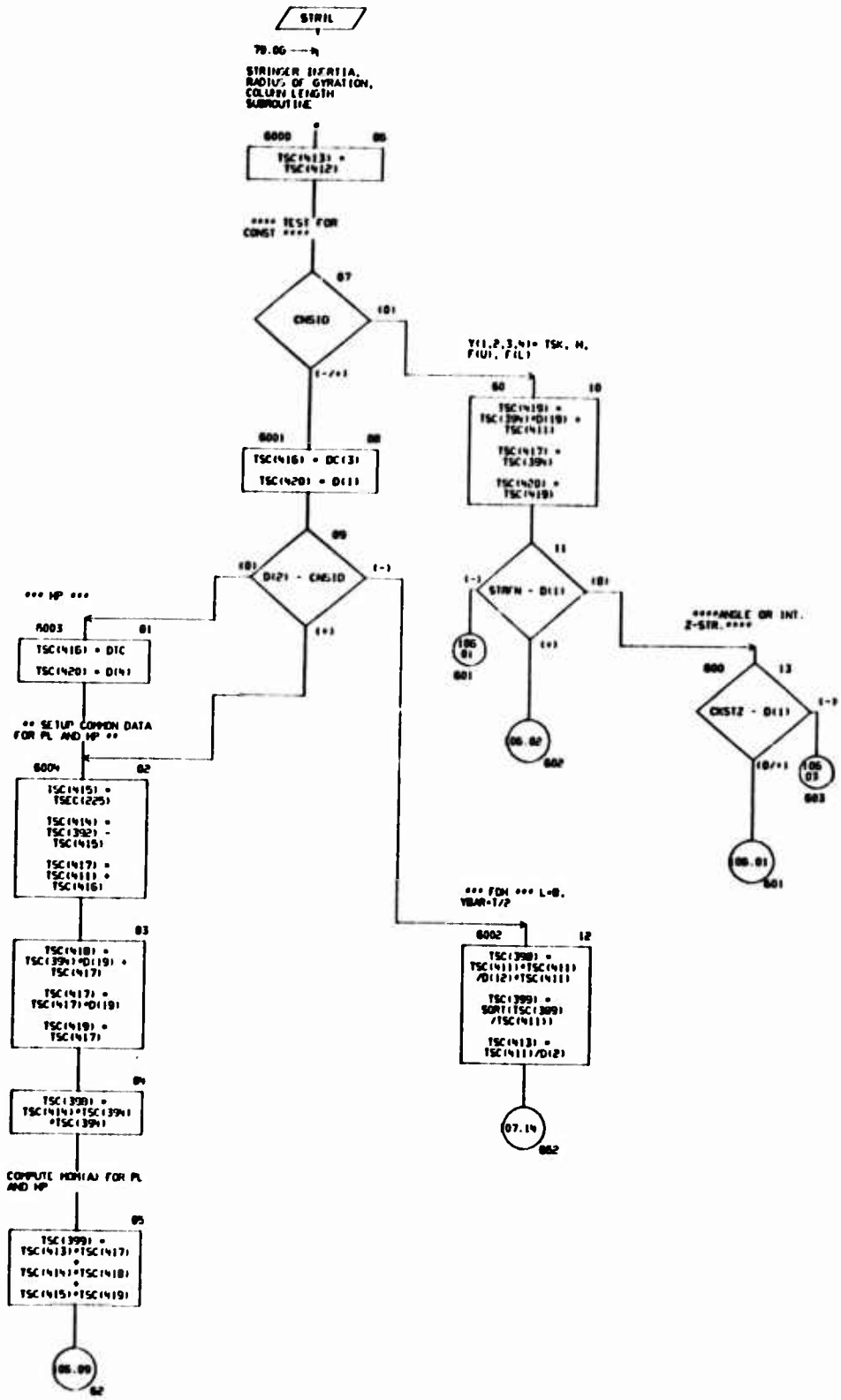

CHART TITLE - SUBROUTINE STRIL

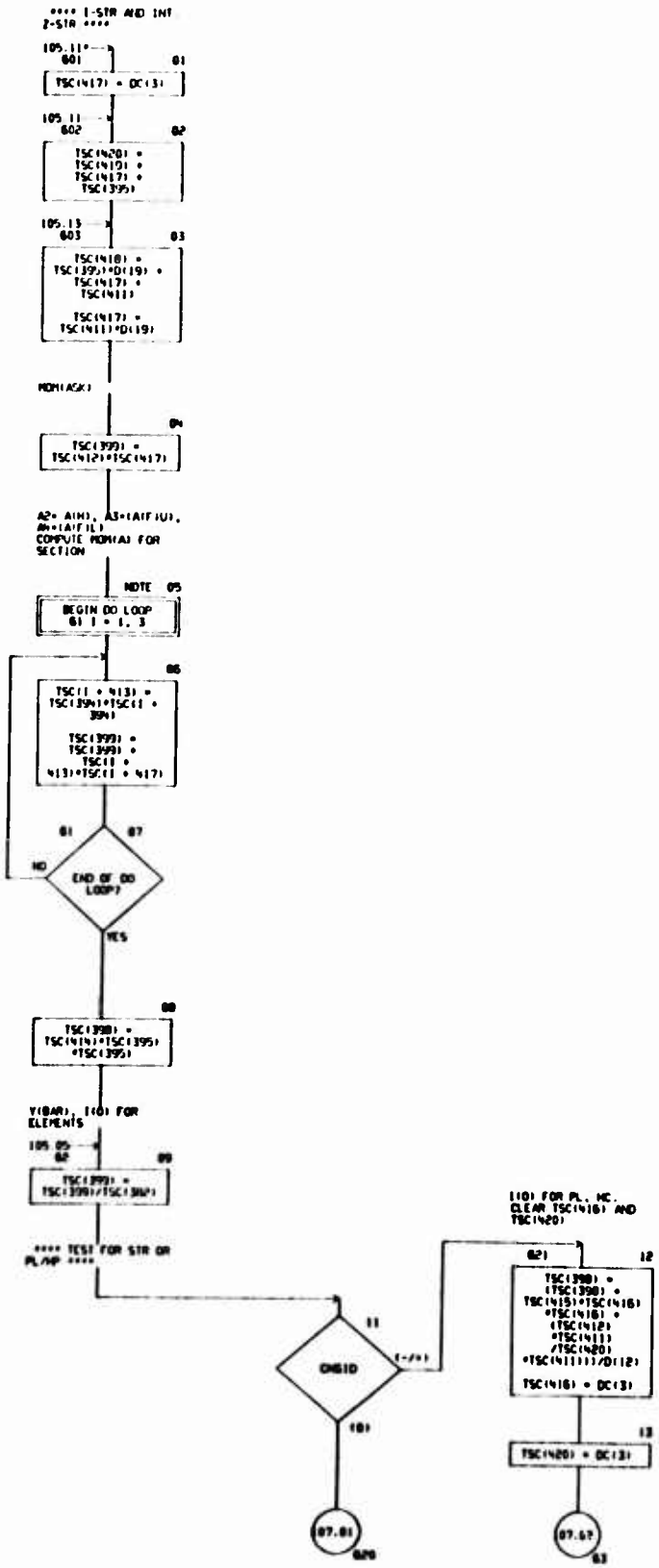

CHART TITLE - SUBROUTINE STRIL

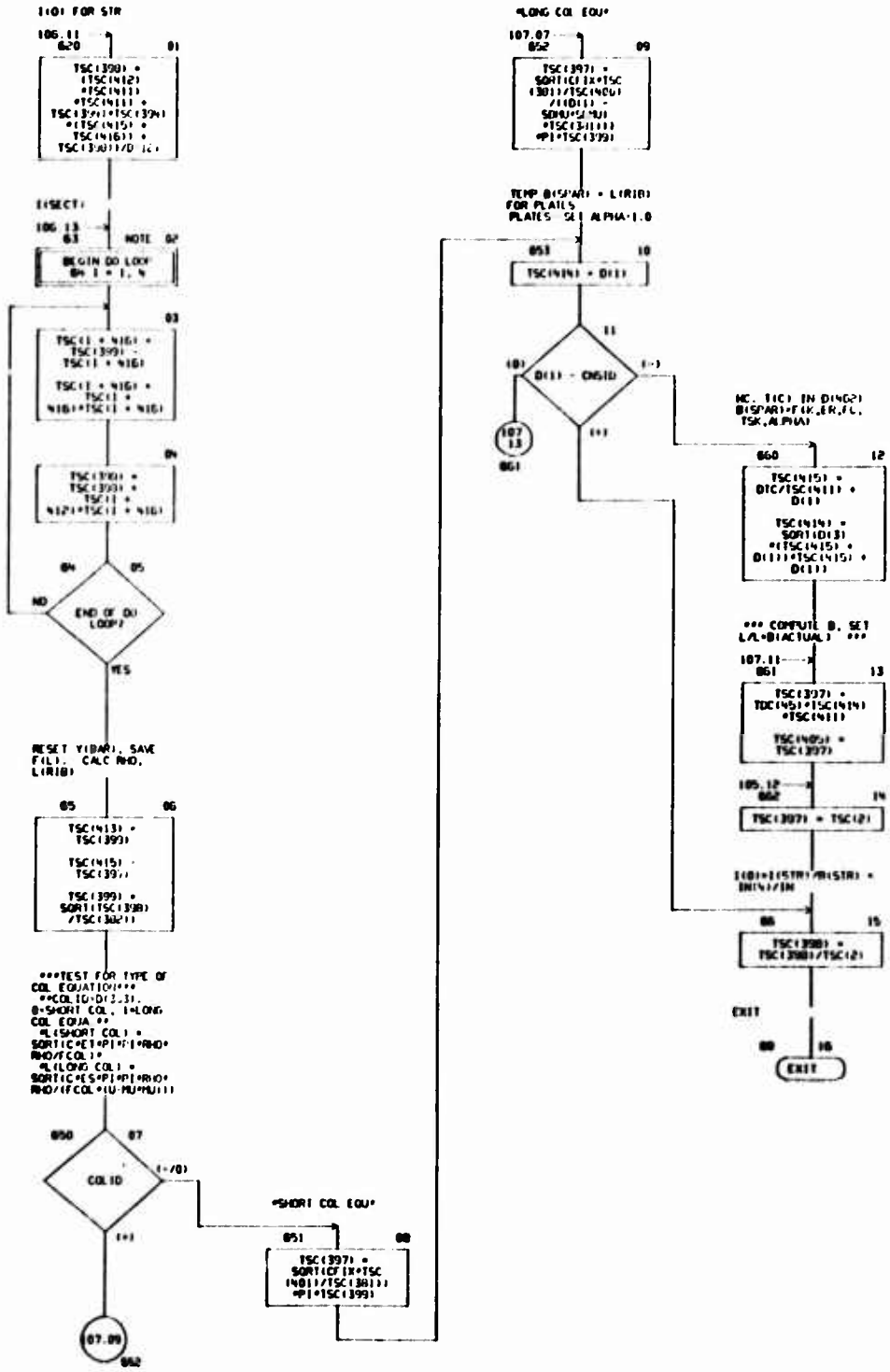

CHART TITLE - NON PROCEDURAL STATEMENTS

```
COMMON T(2000),D(2000),CD(2000),ND(100)
DIMENSION DC(100),TDC(200),TSC(200),TSS(100),
DMTLB(17),
TSEC(300)
EQUIVALENCE (TDC(1),T(1)),(TSC(1),T(105)),(TSS(1),T(155)),
(DC(1),D(140)),(TSEC(1),CD(150)),
(PI,D(1)),
(STREN,D(30)),(CNSID,D(46)),
(COLID,D(39)),(CFIX,D(40)),
(DMTLB(1),T(20)),(SSMU,DMTLB(2)),
(CKSTZ,D(36)),(STLMN,D(37)),(DTC,D(46))
```

CHART TITLE - INTRODUCTORY COMMENTS

```
*****************************************************************

      *****SUBROUTINE STRIB*****
   ***RIB SYNTHESIS CONTROL - RIB T-BAR EVALUATION***

*****************************************************************
```

CHART TITLE - SUBROUTINE STRIB

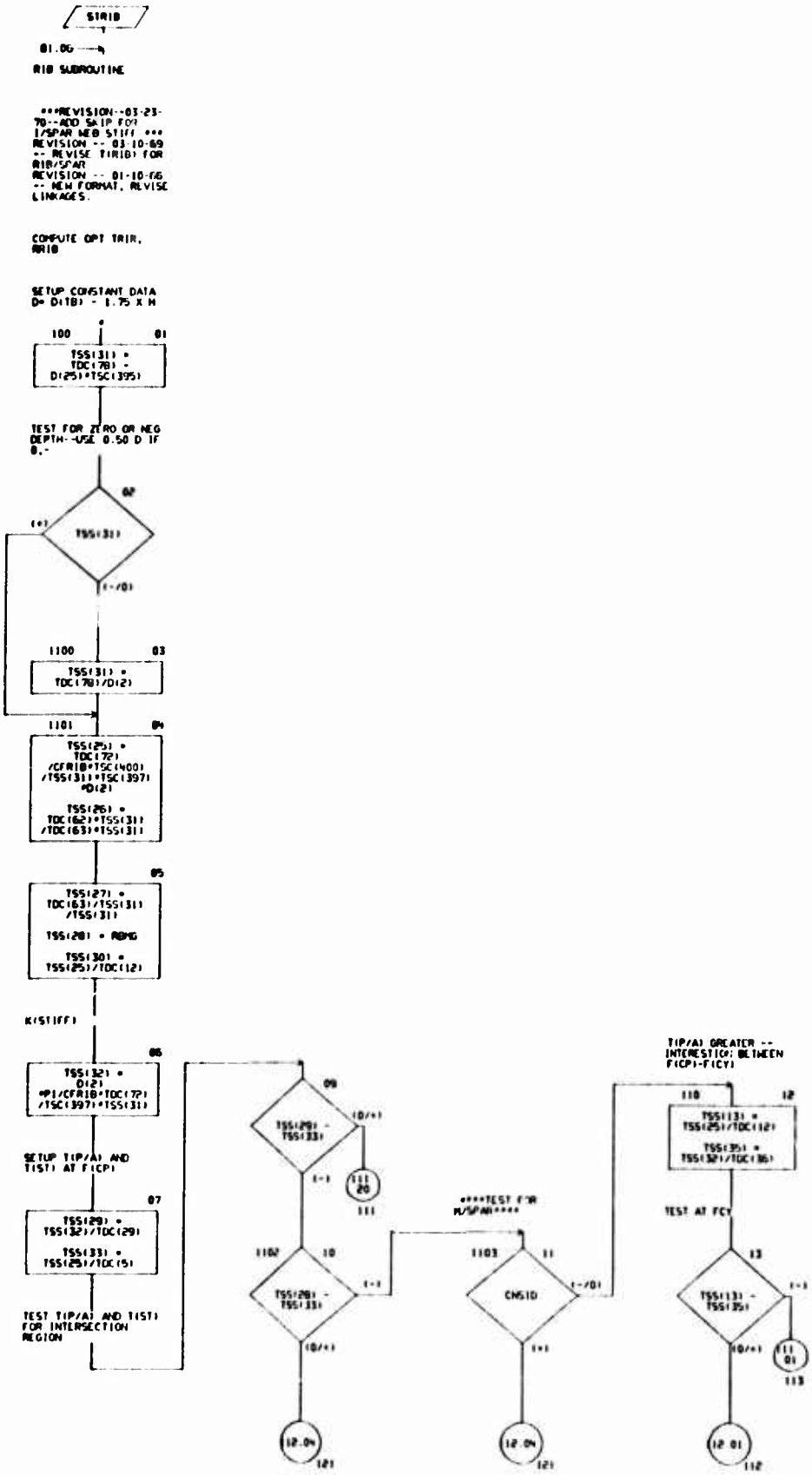

CHART TITLE - SUBROUTINE STWIR

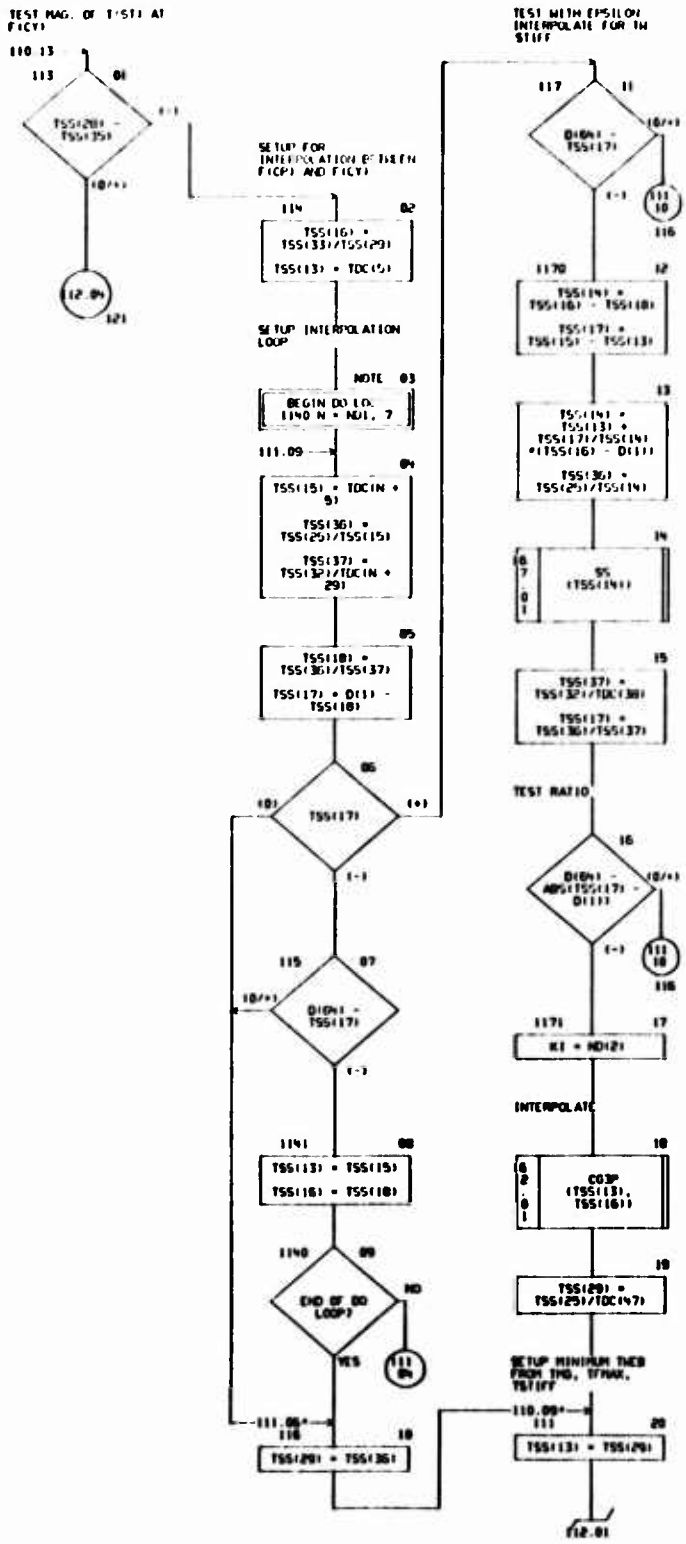

CHART TITLE - SUBROUTINE STRID

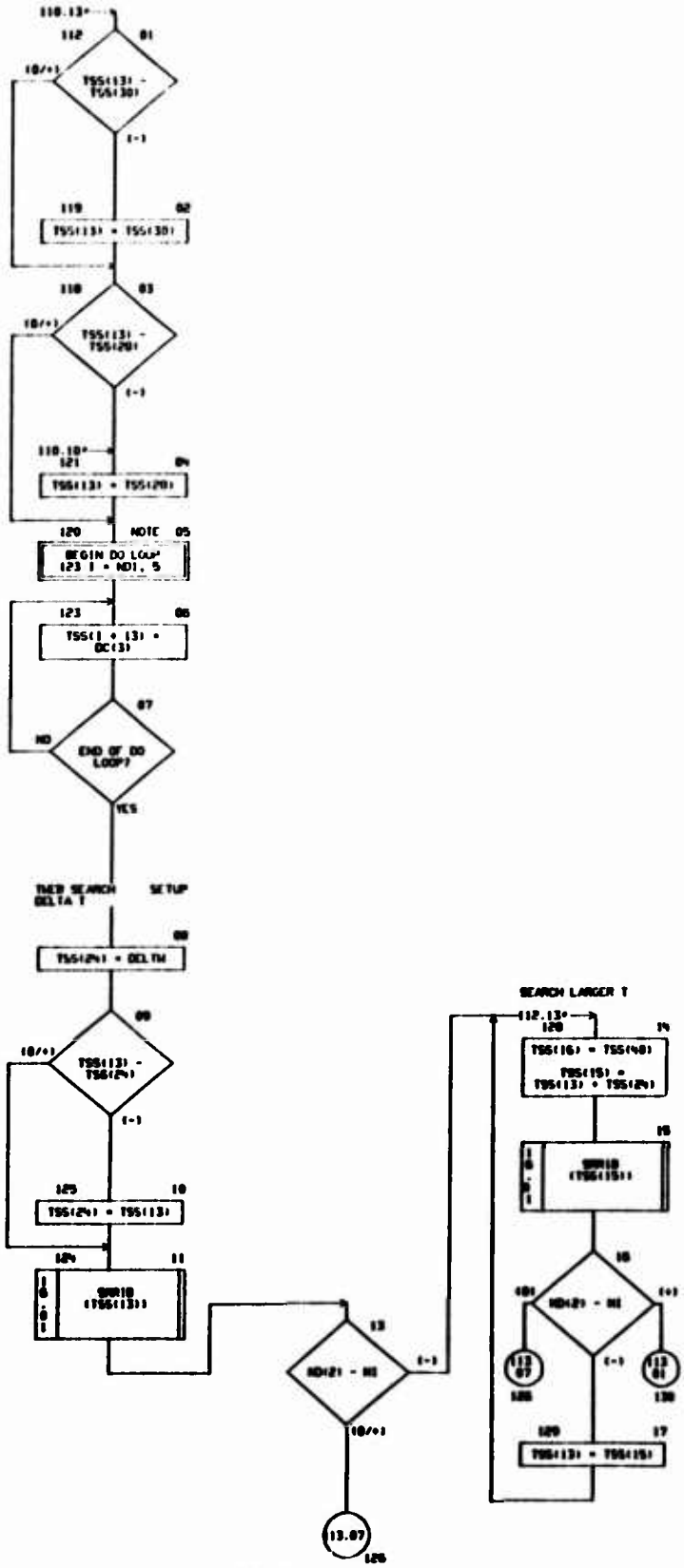

CHART TITLE - SUBROUTINE STRIB

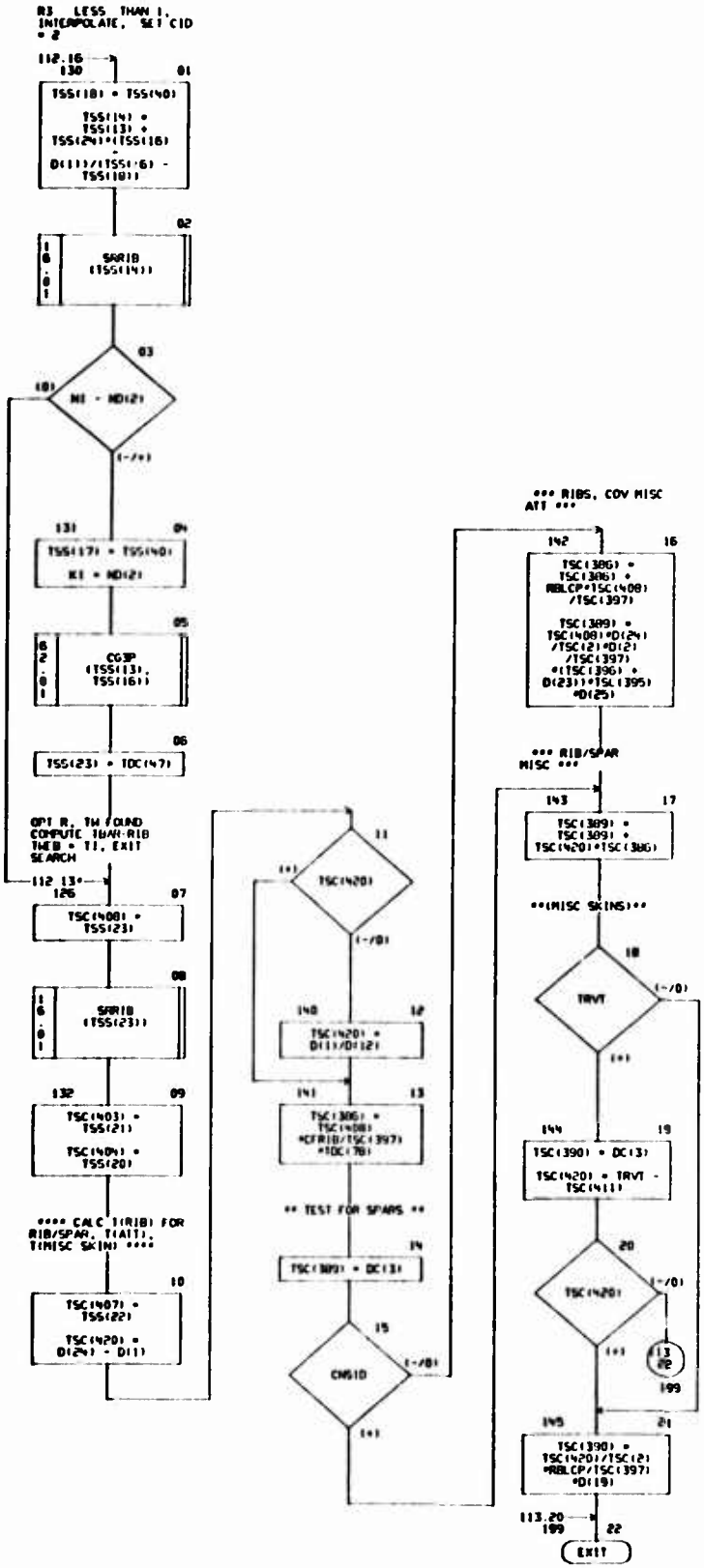

CHART TITLE - NON-PROCEDURAL STATEMENTS

```
COMMON T(2060),D(2060),CD(2000),ND(100)
DIMENSION
TDC(200),TSC(420),TSS(100),DC(100)
EQUIVALENCE (TDC(1),T(1341)),(TSC(1),T(1541)),(TSS(1),T(1961))
EQUIVALENCE (DC(1),D(1401)),(PI,D(15)),(RDMG,D(372)),
(CFRIB,D(400)),(DELTW,D(406)),(RBLCP,D(405)),(TRVT,D(397)),
(CNSID,D(48))
EQUIVALENCE (LT,ND(40)),(KI,ND(39)),(NI,ND(38)),(N,ND(3)),
(ND1,ND(1))
```

CHART TITLE - INTRODUCTORY COMMENTS

```
*****************************************************************

      *****SUBROUTINE SRRIC**  .
   ***RIB T-WEB EVALUATION****

*****************************************************************
```

CHART TITLE - SUBROUTINE [illegible]

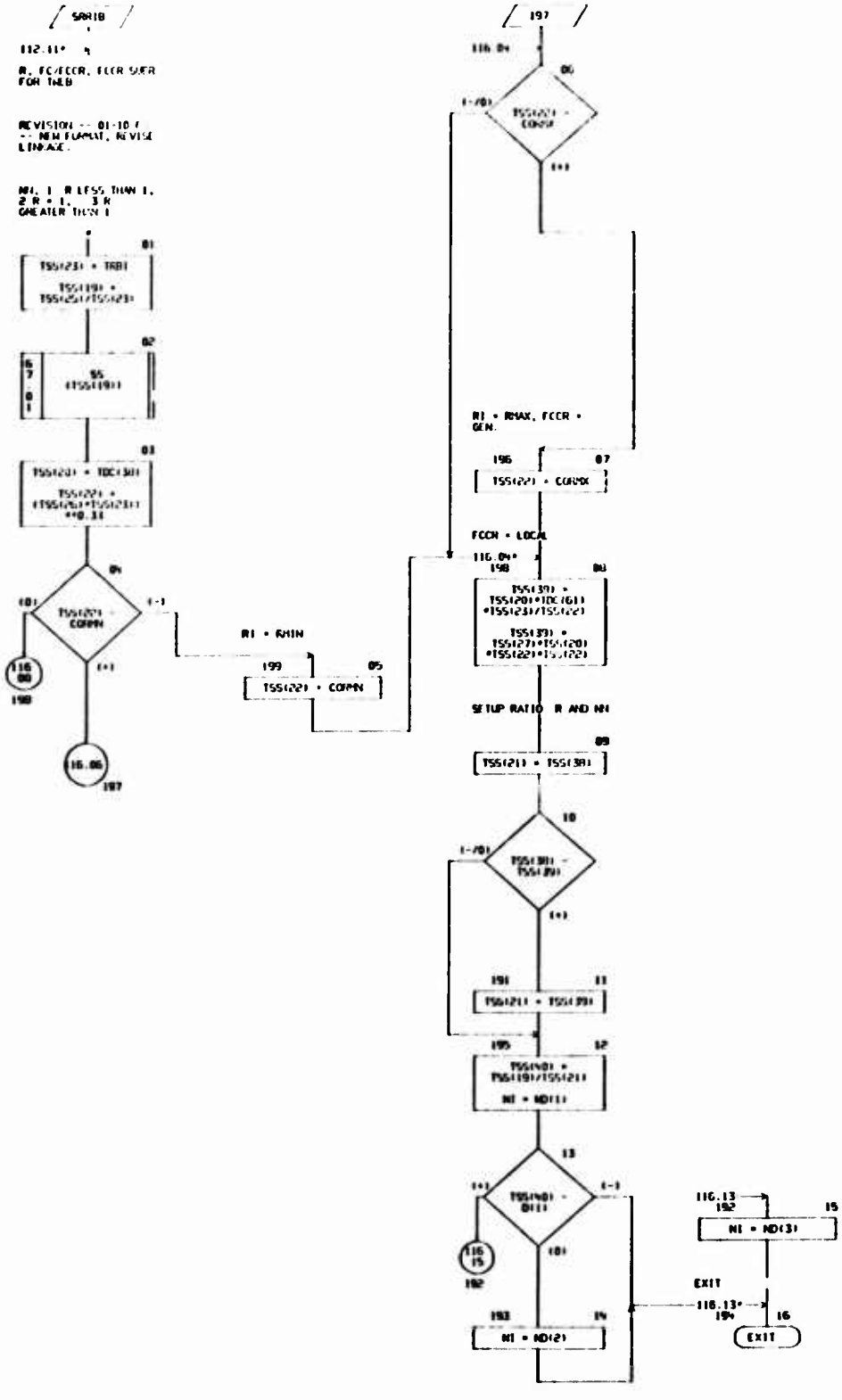

CHART TITLE - NON-PROCEDURAL STATEMENTS

```
COMMON T(2060),D(2000),CD(2000),ND(100)
DIMENSION
TDC(200),TSC(420),TSS(100)
EQUIVALENCE (TDC(1),T(1341)),(TSC(1),T(1541)),(TSS(1),T(1981))
EQUIVALENCE (CORMN,D(403)),(CORMX,D(4C.))
EQUIVALENCE (NI,ND(38))
```

CHART TITLE - INTRODUCTORY COMMENTS

```
*****************************************************************

      *****SUBROUTINE STWEB*****
   ***FRONT/REAR SPAR CAP/WEB EVALUATION***

*****************************************************************
```

CHART TITLE - SUBROUTINE STHEB(VO,DEPTH)

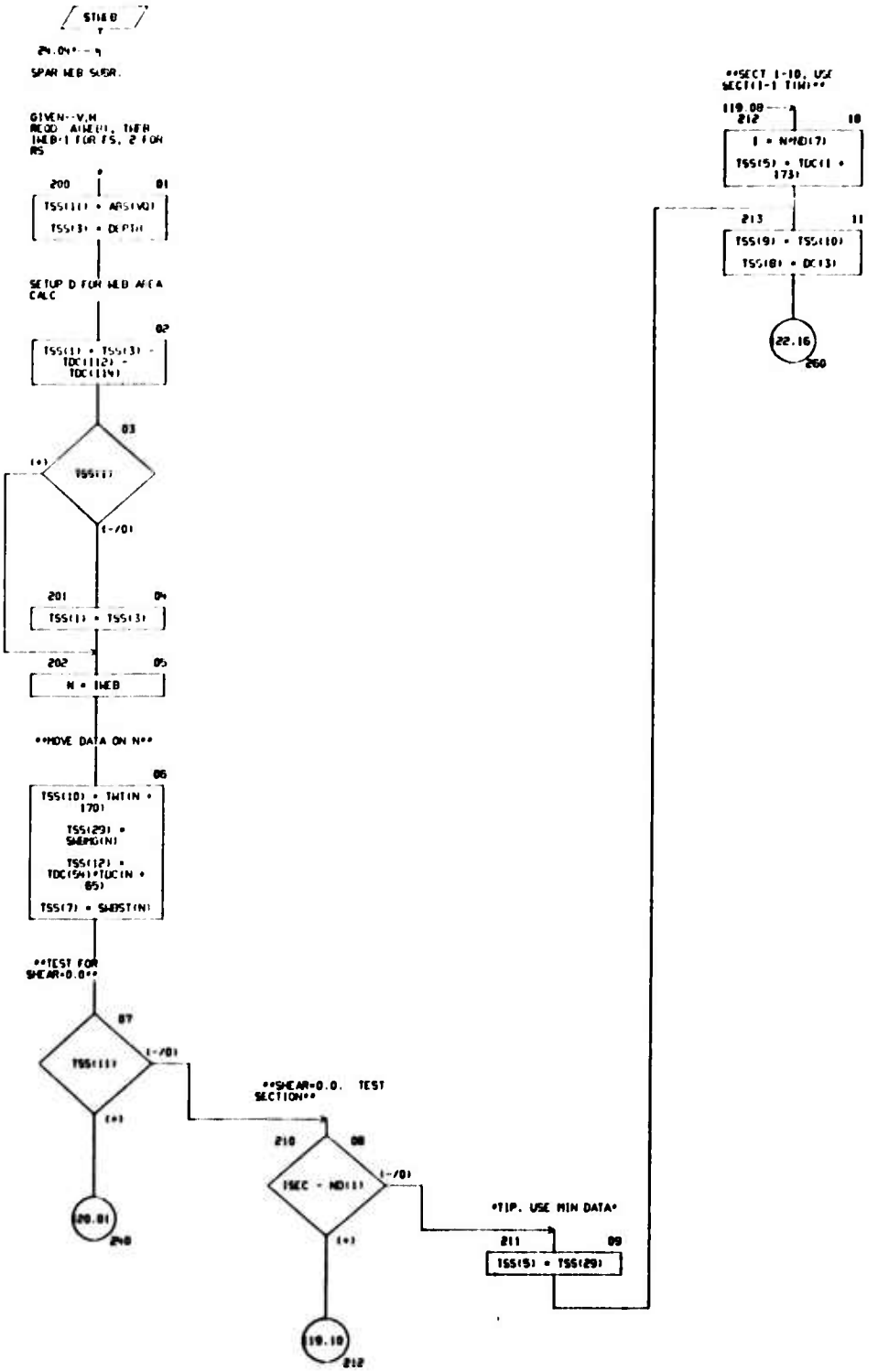

CHART TITLE - SUBROUTINE STABILIZ(I,J)

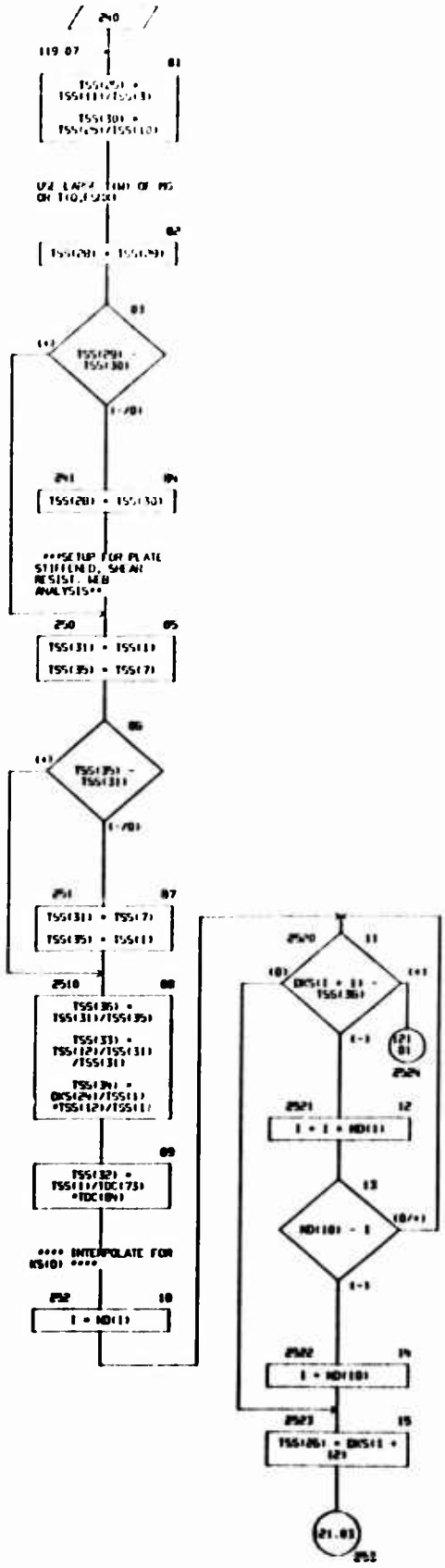

CHART TITLE - SUBROUTINE STHEB(VO,DEPTH)

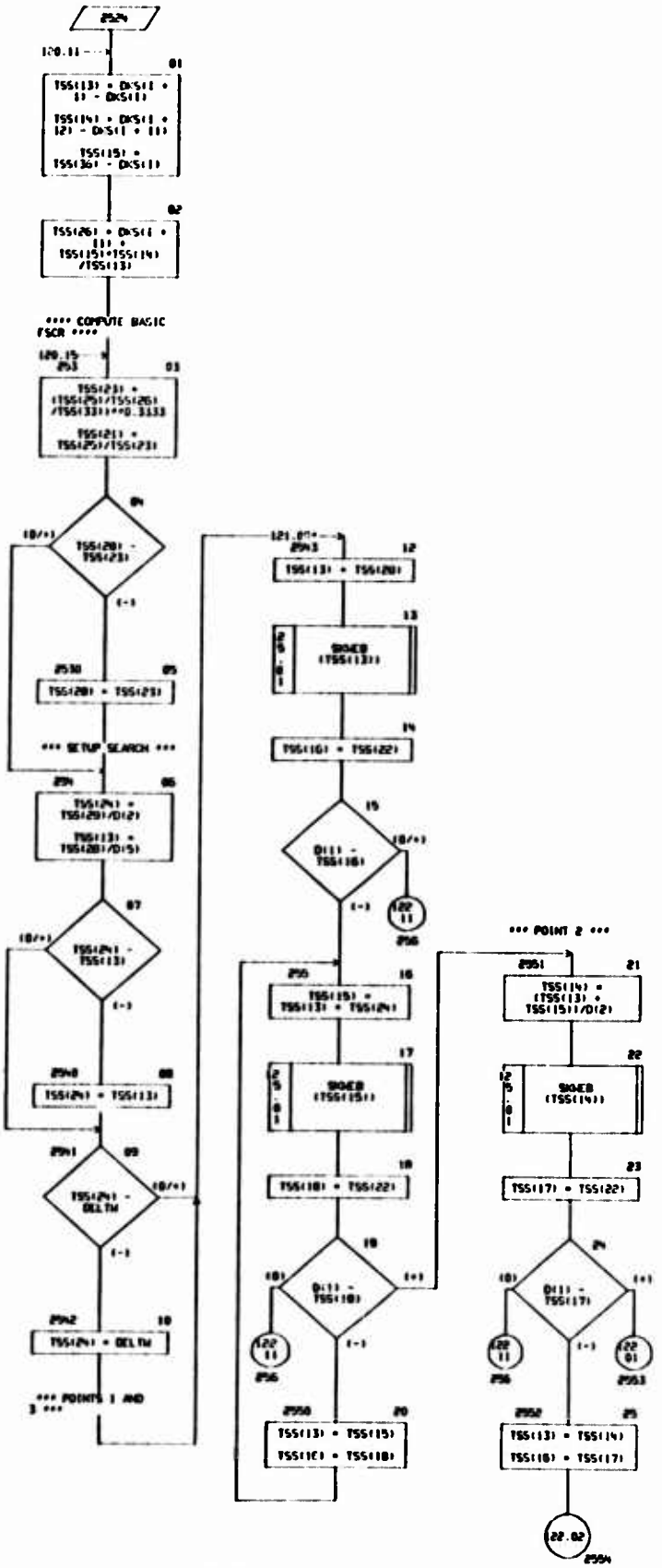

06/11/74

CHART TITLE - SUBROUTINE STHEB(VO,DEPTH)

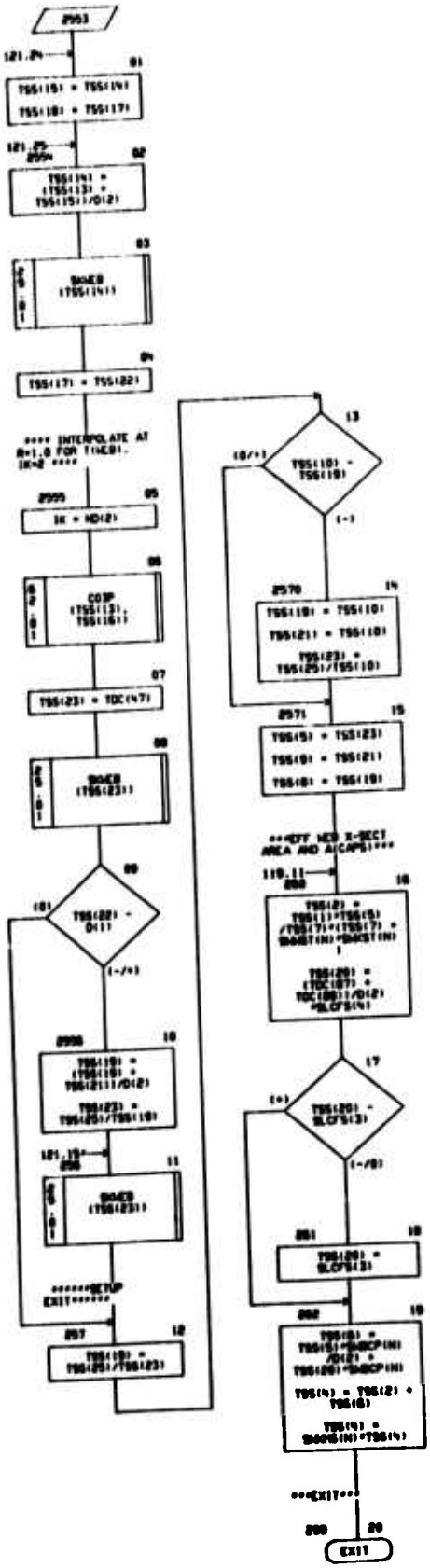

CHART TITLE - NON PROCEDURAL STATEMENTS

```
COMMON T(2000),D(2000),CD(2000),ND(100)
DIMENSION TDC(200),TSC(420),TSS(100),TWT(400),TSFC(300),DC(100),
SWBST(2),SWBST(2),SWBHS(2),
SWBWG(2),SWBCP(2),SWBST(2),
DKS(24),SLCFS(5)
EQUIVALENCE (TDC(1),T(134)),(TSC(1),T(154)),(TSS(1),T(190)),
(DC(1),D(140)),(TWT(1),CD(110)),(TSFC(1),CD(150)),
(SWBST(1),D(16)),(SWBST(1),D(20)),(SWBHS(1),D(37)),
(SWBCP(1),D(28)),(SWBST(1),D(25)),(SWBWG(1),D(10)),
(DKS(1),D(50)),(SLCFS(1),D(47)),
(DELTN,D(22)),
(TSEC,ND(55)),(TK,ND(39)),(TWEB,ND(37)),(N,ND(30))
```

CHART TITLE - INTRODUCTORY COMMENTS

```
*****************************************************************

      *****SUBROUTIN  SHEB*****
   ***SPAR WEB CRITICAL STRESS EVALUATION***

*****************************************************************
```

CHART TITLE - SUBROUTINE SWEB(TX)

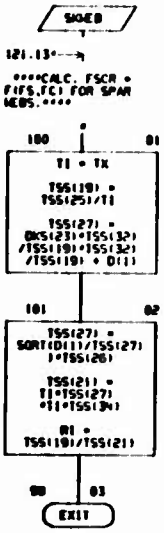

CHART TITLE - NON-PROCEDURAL STATEMENTS

```
COMMON T(2060),D(2060),CD(2000),ND(100)
DIMENSION                                DC(100),
TDC(200),TSC(420),TSS(100)
DKS(23)
EQUIVALENCE (TDC(1),T(1394)),(TSC(1),T(1594)),(TSS(1),T(1996)),
(DC(1),D(140)),(DKS(1),D(550)),
(TI,TSS(23)),(RI,TSS(22))
```

CHART TITLE - INTRODUCTORY COMMENTS

```
*****************************************************************

      *****SUBROUTINE EIGJC*****
   ***SECTION EI AND GJ STIFFNESS EVALUATION***

*****************************************************************
```

CHART TITLE - SUBROUTINE EIGJC

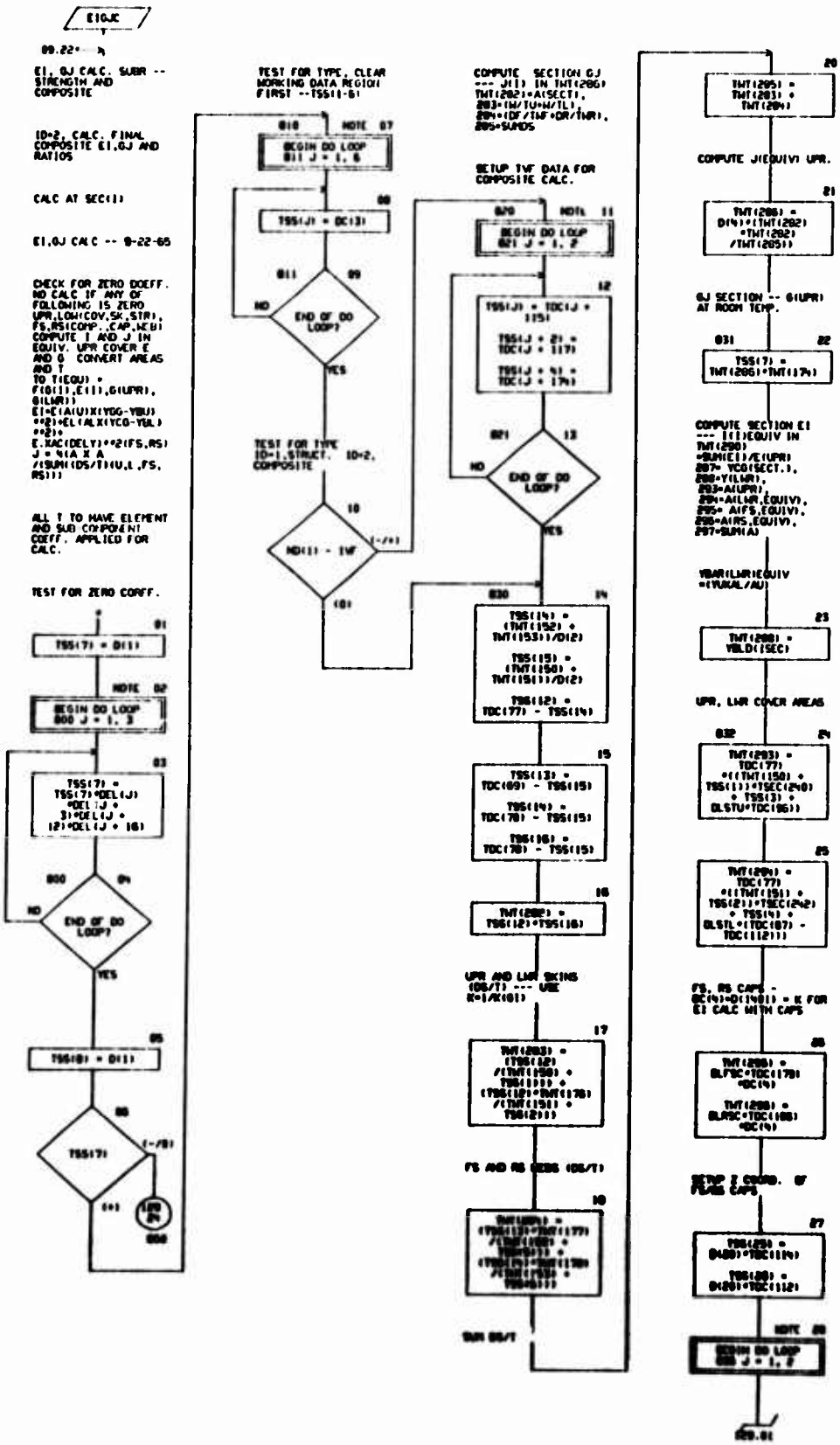

CHART TITLE - SUBROUTINE EIGJC

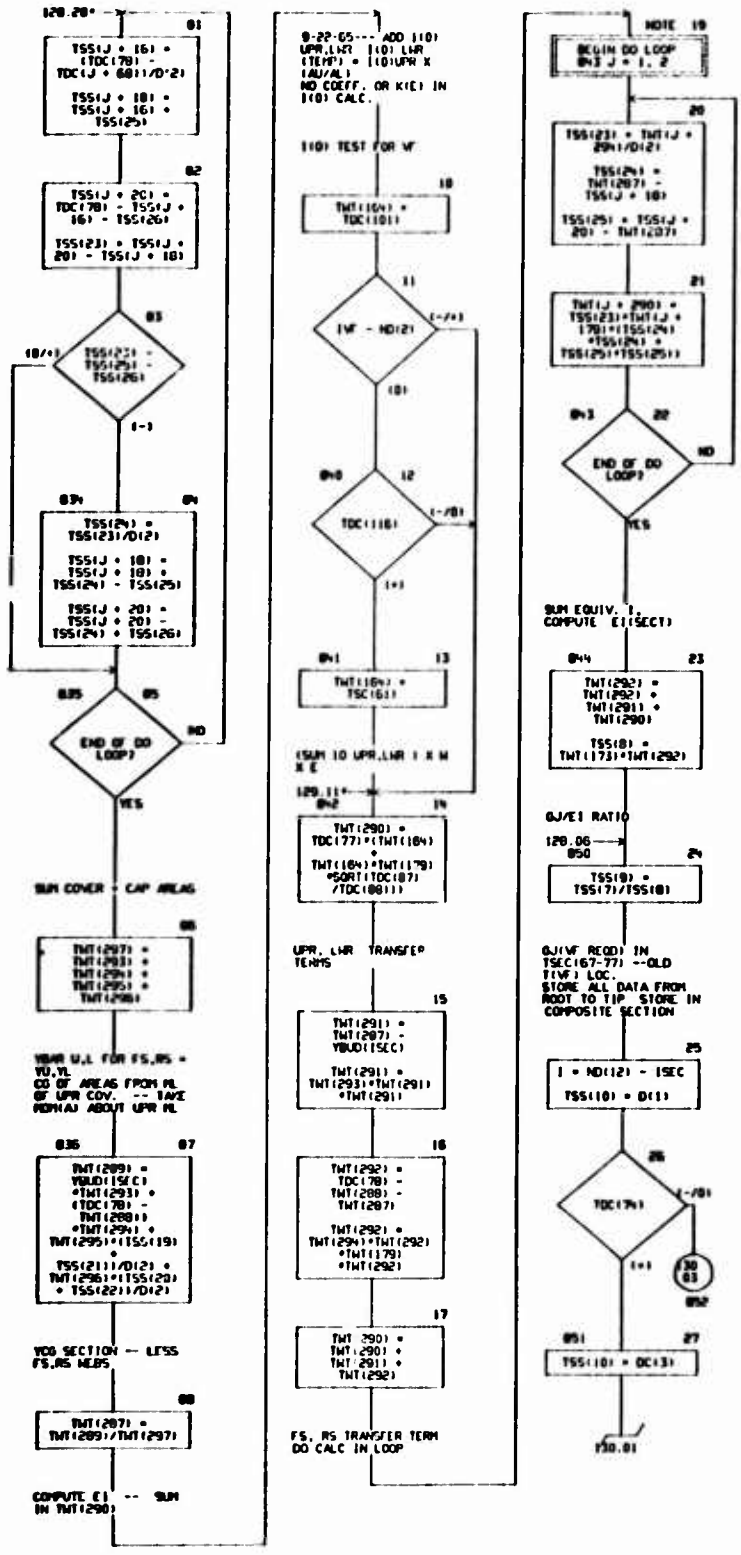

CHART TITLE - SUBROUTINE EIGJC

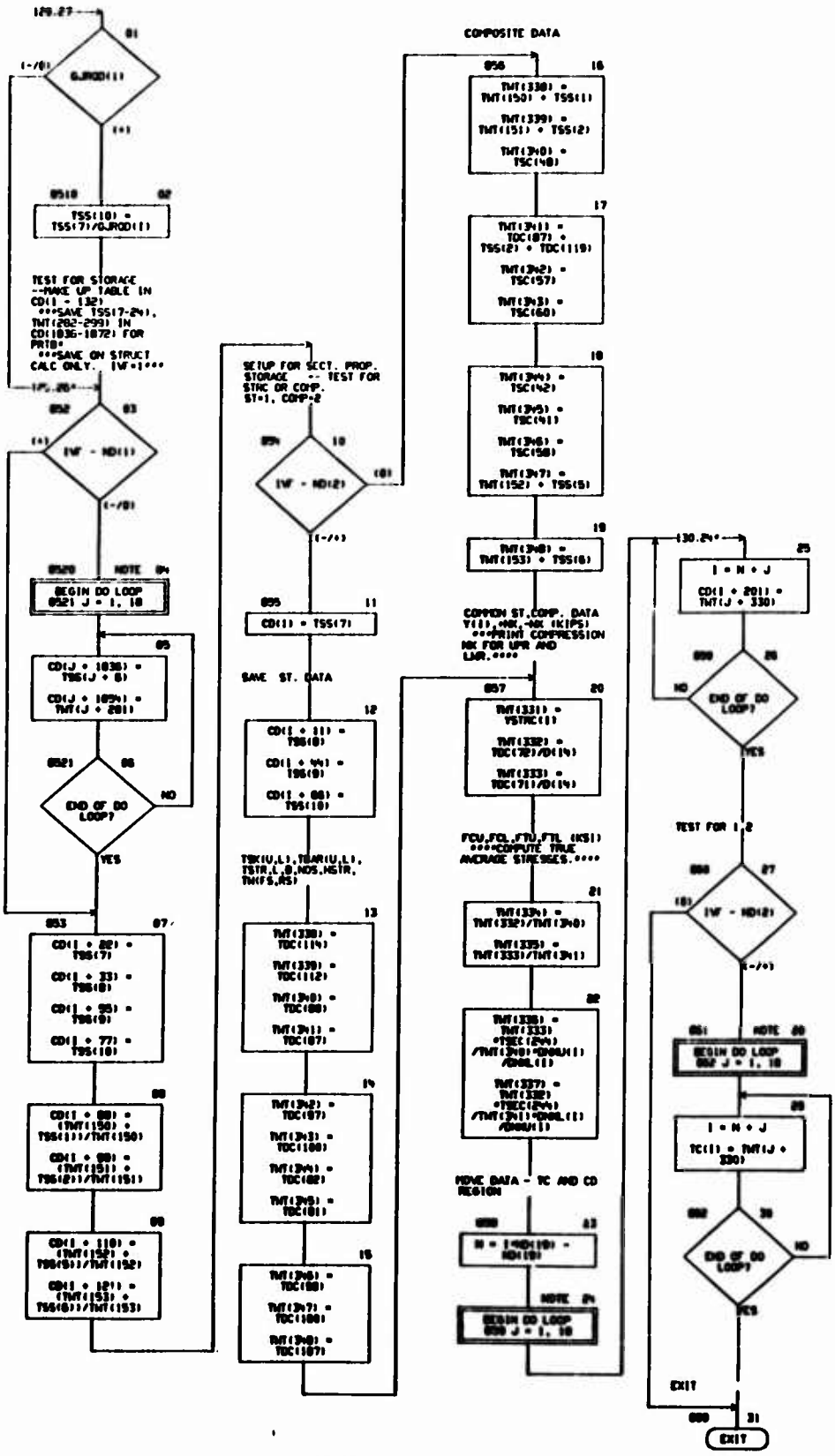

CHART TITLE - NON PROCEDURAL STATEMENTS

```
COMMON T(2060),D(2060),CD(2000),ND(10)
DIMENSION                                DC(100),
TDC(200),TSC(420),TSS(100),TWT(400),TSEC(300),
TC(340),YSTRC(11),
GJRQD(11),DEL(30),
YBUD(11),YBLD(11),
DNRU(11),DNRL(11)
EQUIVALENCE (TDC(1),T(134)),(TSC(1),T(154)),(TSS(1),T(196)),
(DC(1),D(140)),(TWT(1),CD(110)),(TSEC(1),CD(150)),
(TC(1),T(960)),(DNRU(1),D(931)),(DNRL(1),D(942)),
(YBUD(1),T(679)),(YBLD(1),T(690)),(YSTRC(1),TSEC(166)),
(GJRQD(1),T(660)),
(DEL(1),TWT(251)),
(DLFSC,DEL(14)),(DLRSC,DEL(18)),(DLSTU,DEL(3)),(DLSTL,DEL(6)),
(ISEC,ND(55)),(IVF,ND(51)),(II,ND(30))
```

CHART TITLE - INTRODUCTORY COMMENTS

```
*****************************************************************

      *****SUBROUTINE VECAL*****
   ***SECTION TORSIONAL STIFFNESS MODUL EVALUATION***

*****************************************************************
```

CHART TITLE - SUBROUTINE VFCAL

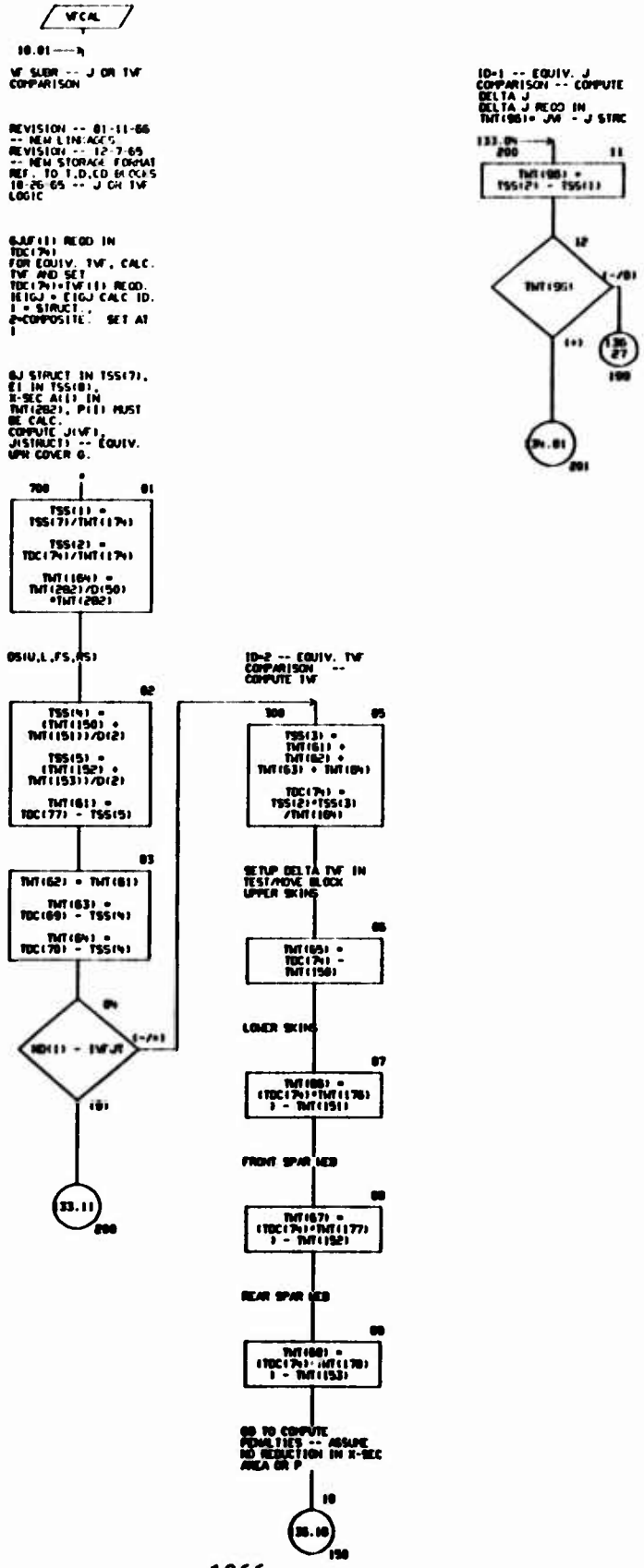

CHART TITLE - SUBROUTINE VFCAL

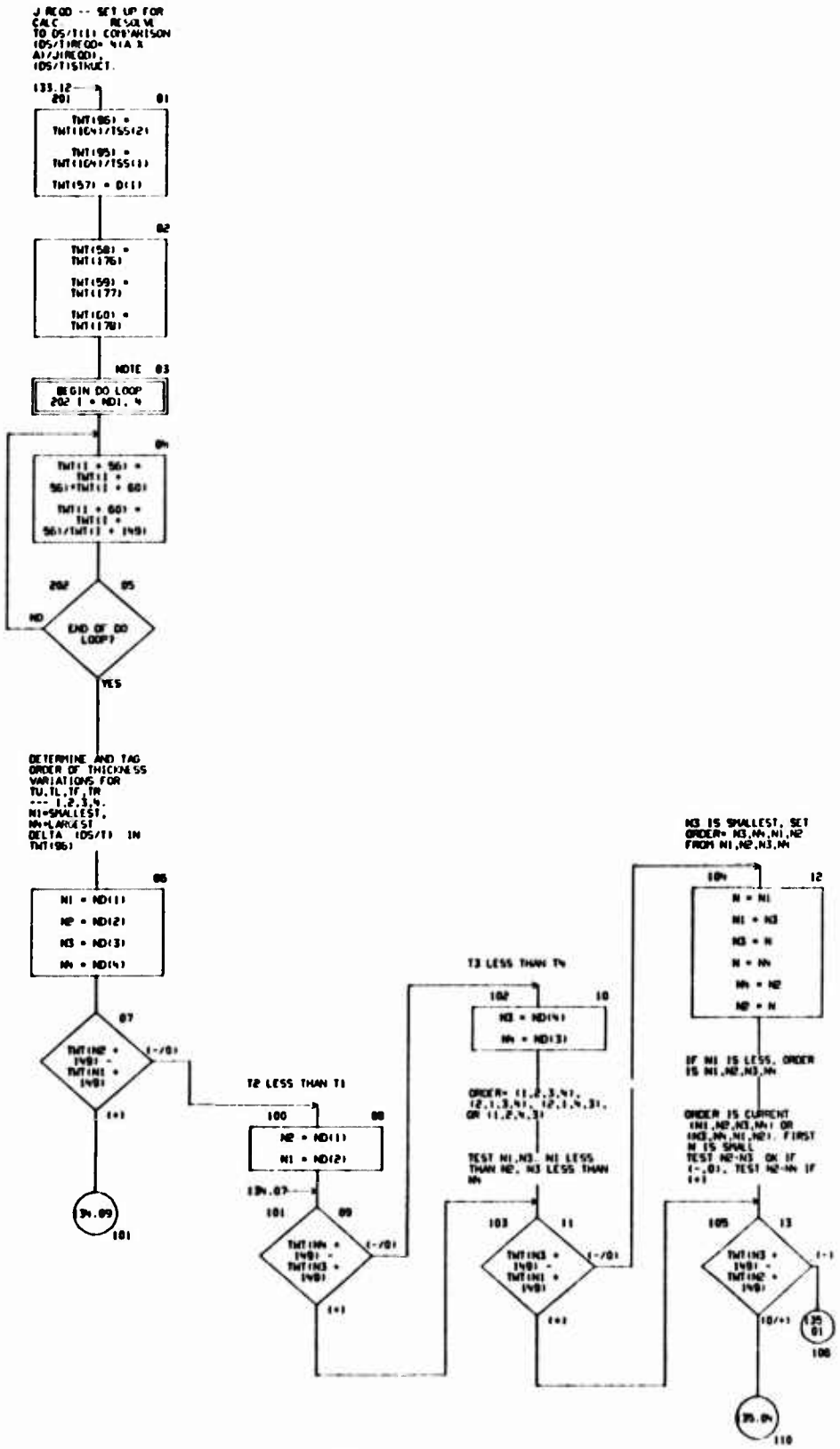

CHART TITLE - SUBROUTINE VECAL

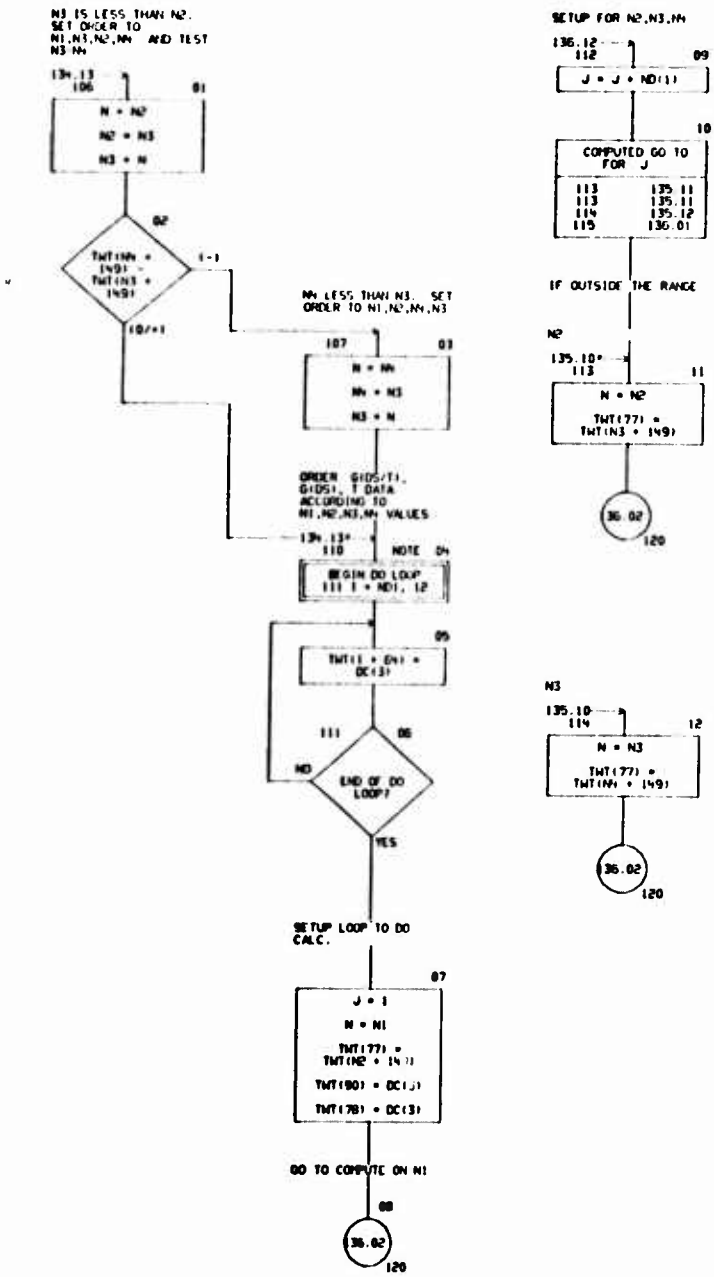

CHART TITLE - SUBROUTINE WCAL

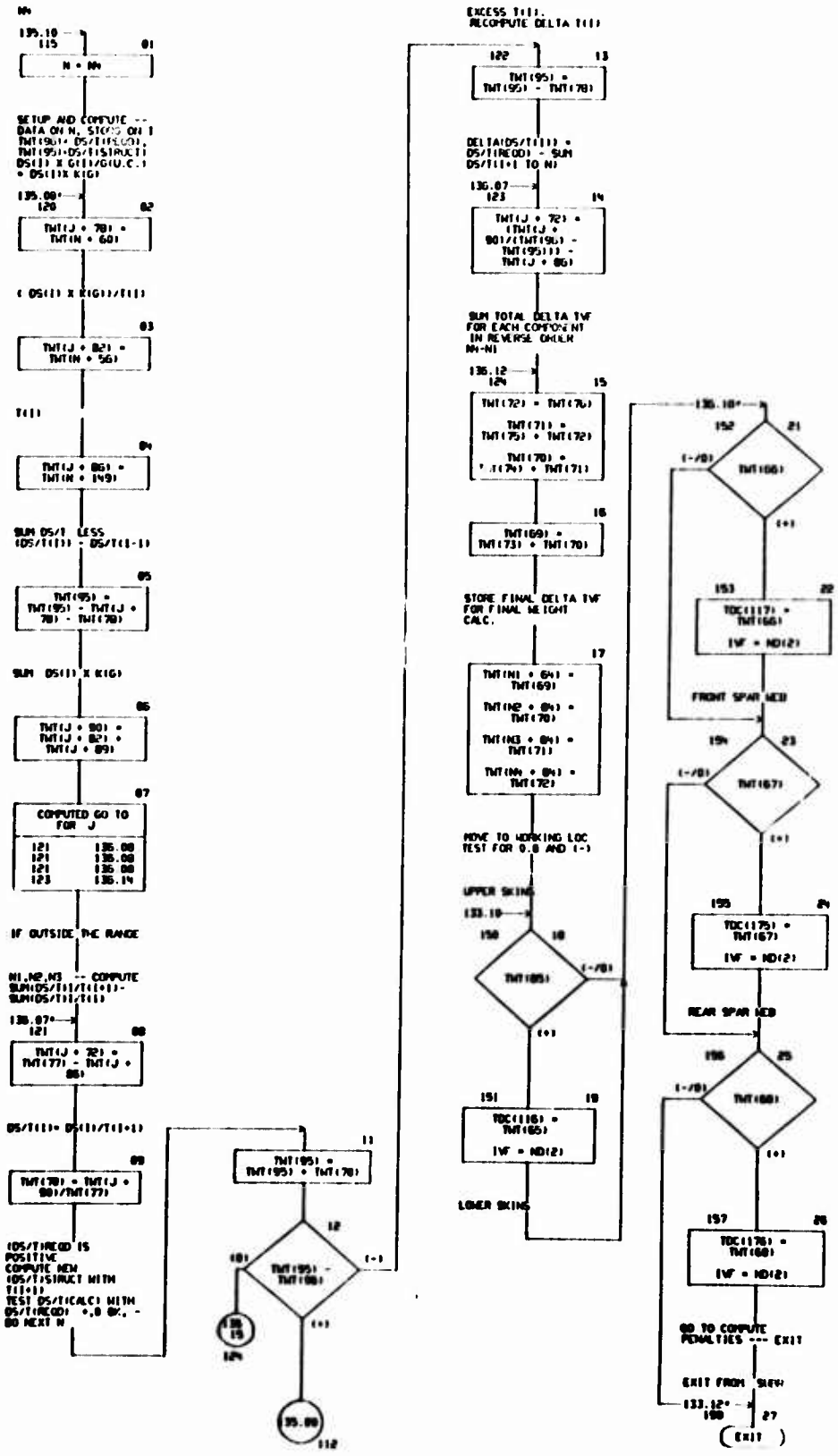

CHART TITLE - NON-PROCEDURAL STATEMENTS

```
COMMON T(2000),D(2060),CD(2000),ND(100)
DIMENSION                                   DC(100),
TDC(200),TSC(420),TSS(100),TWT(400),TSEC(300),YSTRC(1),
SWBID(23),GW(3),SWRND(2),SWDE(2)
EQUIVALENCE (TDC(1),T(1134)),(TSC(1),T(1534)),(TSS(1),T(1896))
EQUIVALENCE (GW(1),D(80)),(SCFNO,D(330)),(SCMU,D(321)),
(SWBID(1),D(410)),(SWRND(1),D(414)),(SWDE(1),D(416)),
(SCFNB,D(422)),(DC(1),D(480))
EQUIVALENCE (TWT(1),CD(1101)),(TSEC(1),CD(1501)),
(YSTRC(1),CD(1CFG))
EQUIVALENCE (IGW,ND(57)),(NODW,ND(56)),(ISEC,ND(55)),
(IWJT,ND(53)),(IB,ND(52)),(IWF,ND(51)),(IWF2,ND(50)),(IN,ND(44)),
(N3,ND(43)),(N2,ND(42)),(N1,ND(41)),(N,ND(31)),(J,ND(30)),
(IDRS,ND(24)),(IDFS,ND(23)),(ND1,ND(1))
```

CHART TITLE - INTRODUCTORY COMMENTS

```
*****************************************************************

      *****SUBROUTINE WTCAL*****
   ***SECTION/PANEL WEIGHT EVALUATION***

*****************************************************************
```

CHART TITLE - SUBROUTINE WTCAL

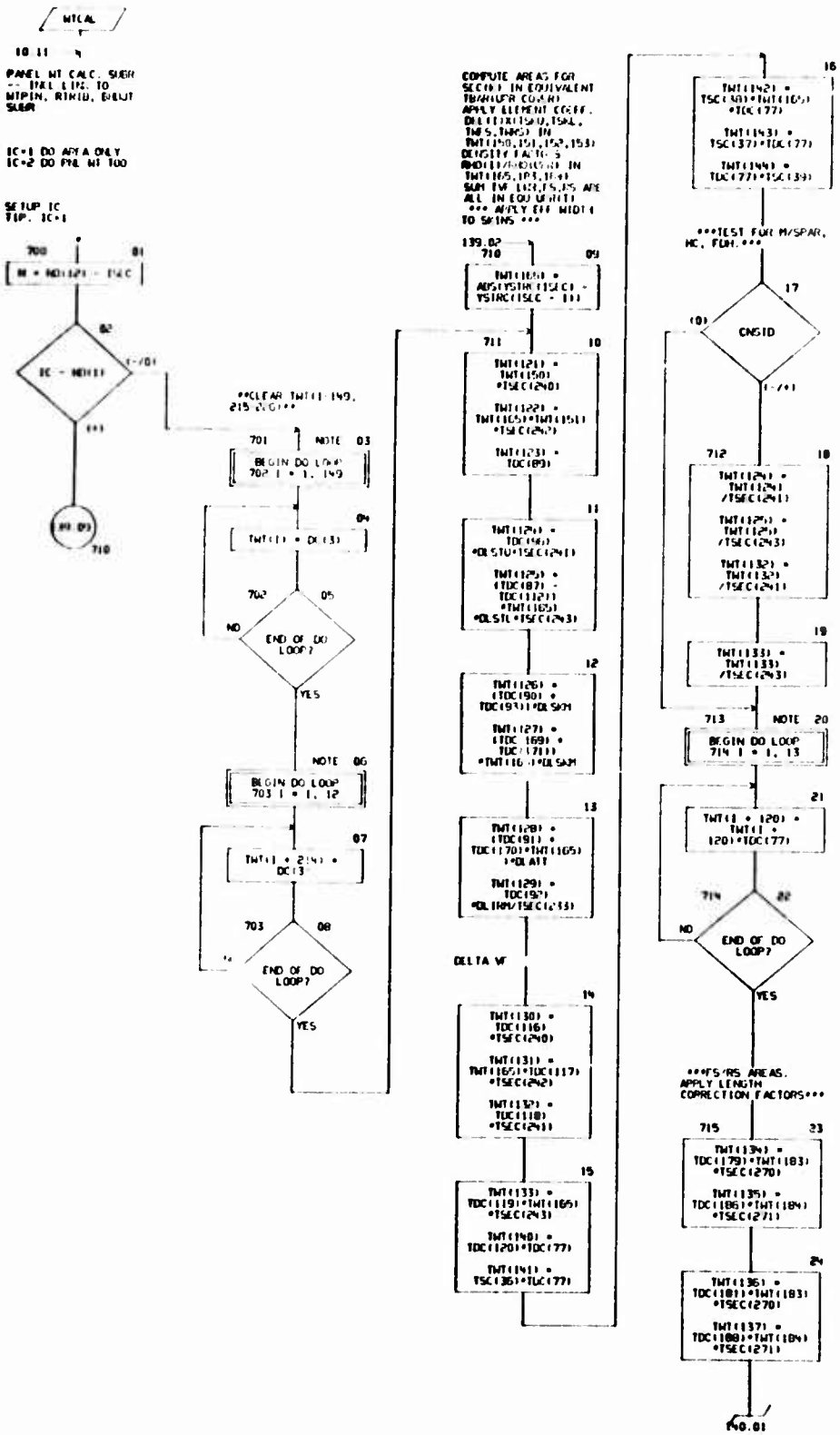

CHART TITLE - SUBROUTINE WTCAL

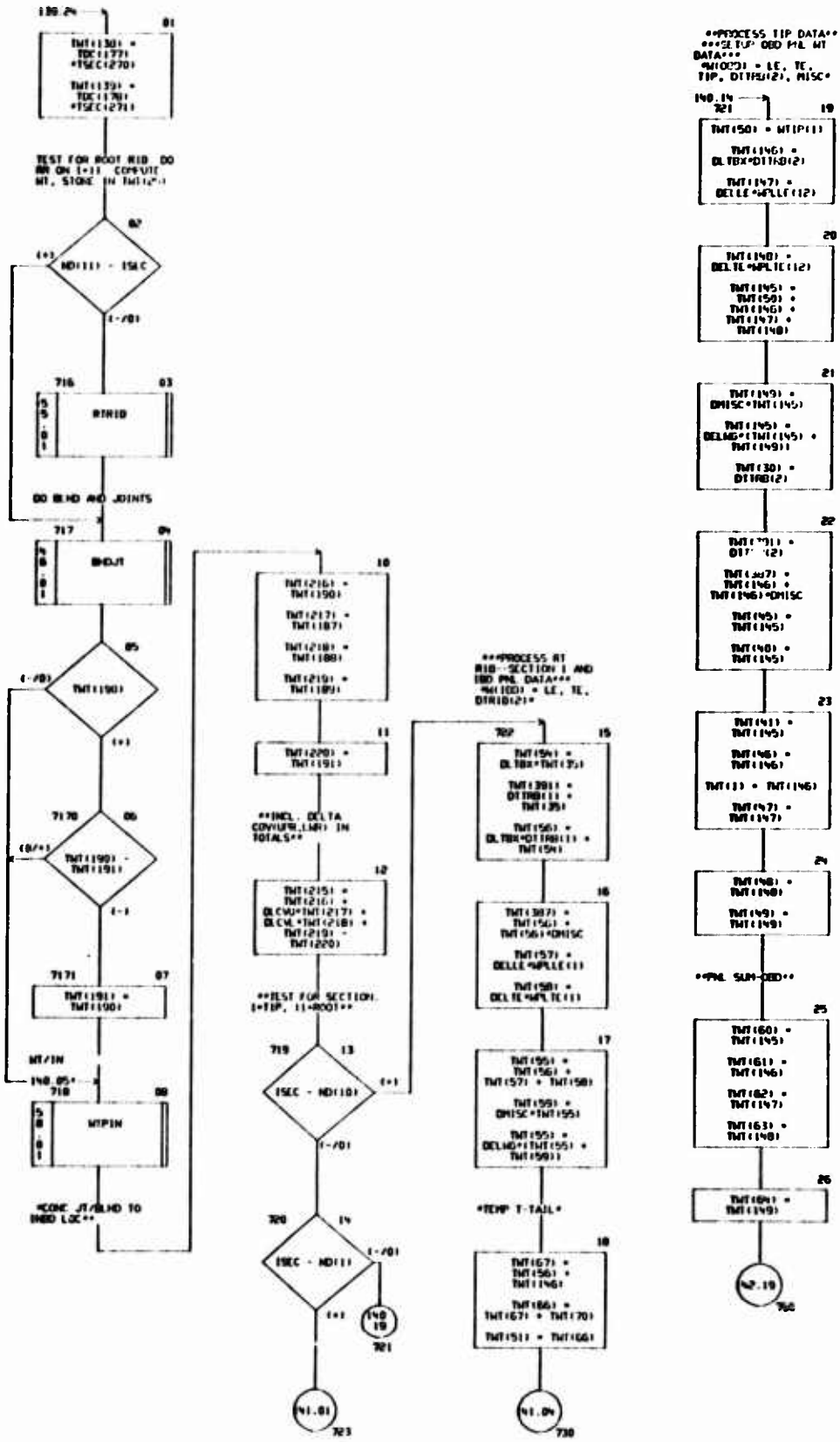

CHART TITLE - SUBROUTINE WTCAL

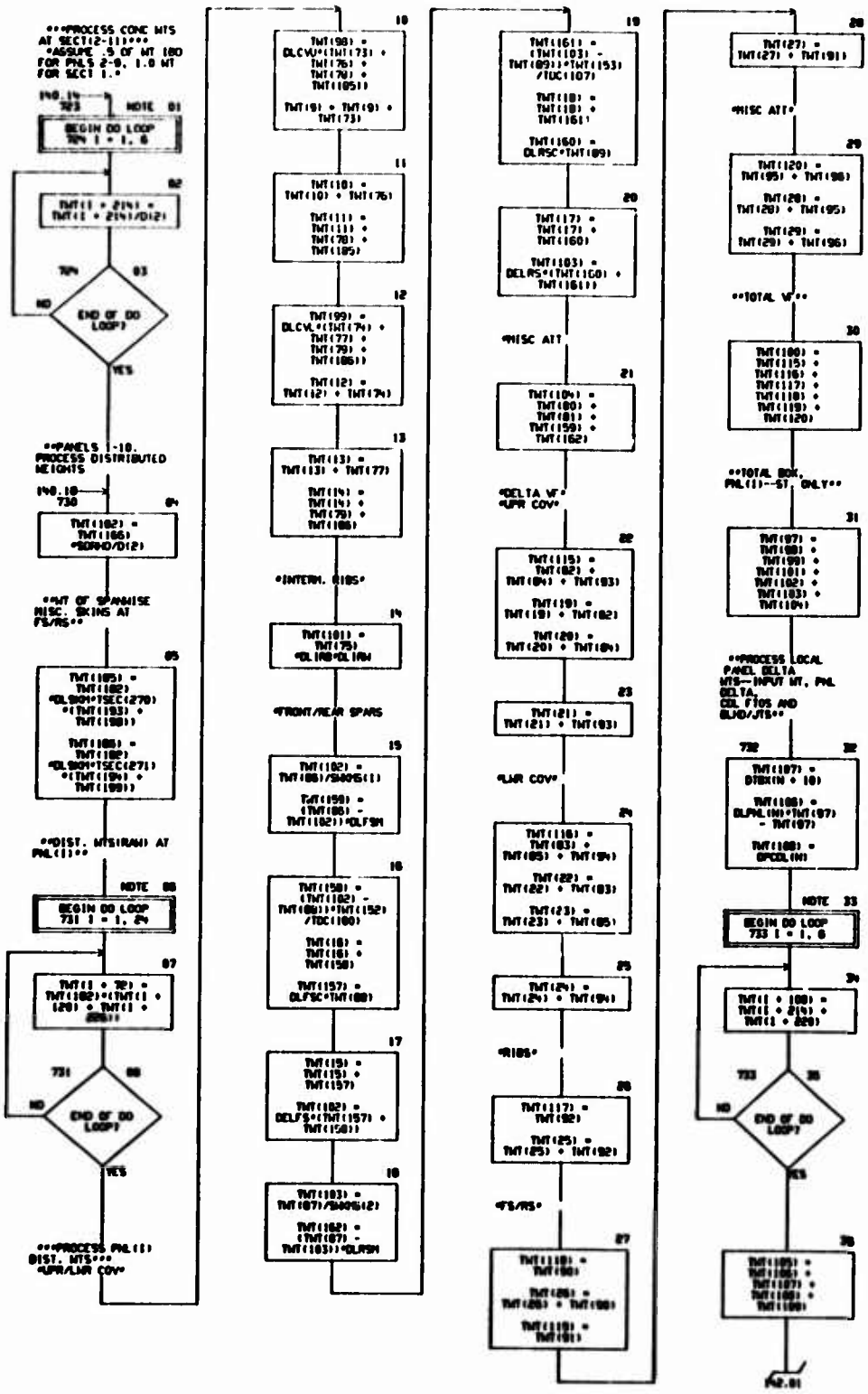

CHART TITLE - SUBROUTINE WTCAL

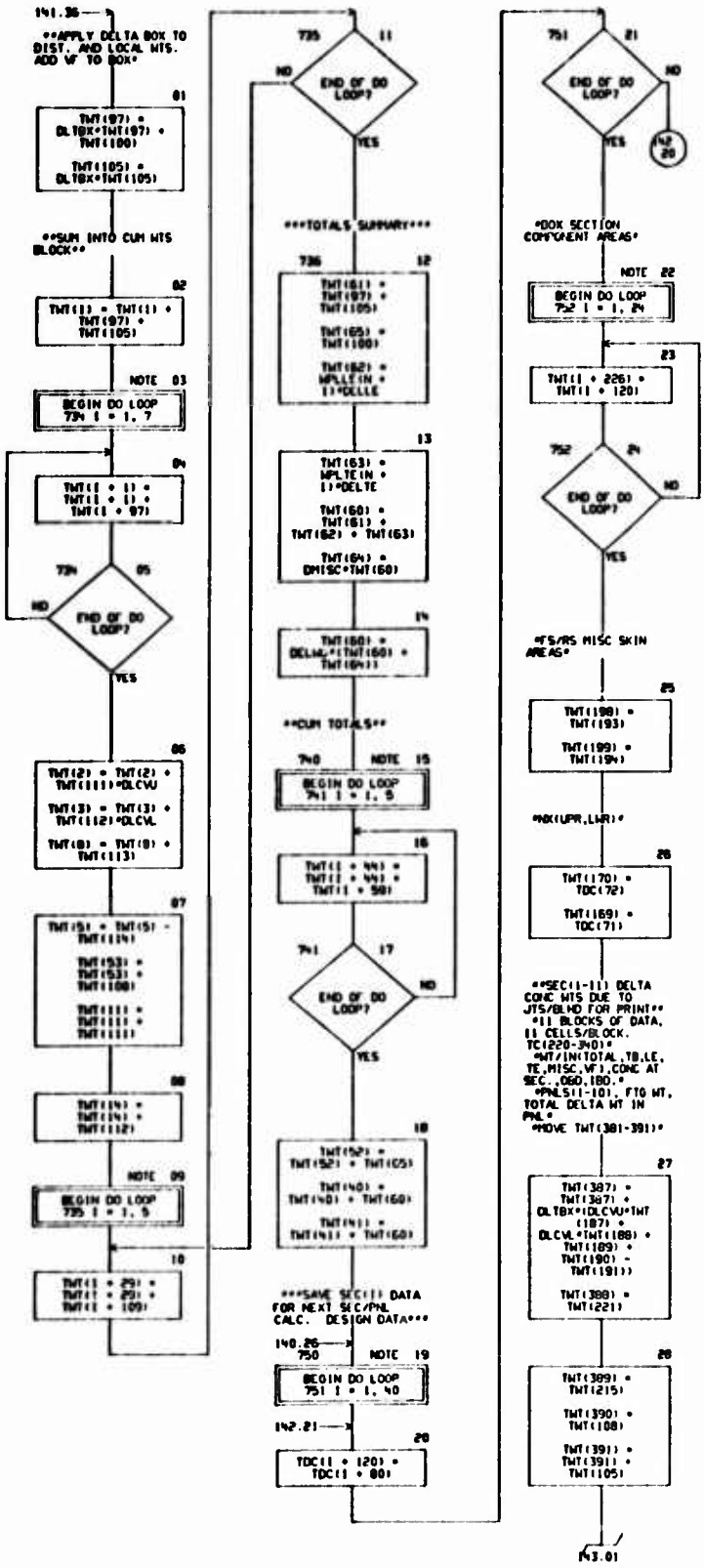

CHART TITLE - SUBROUTINE WICAL

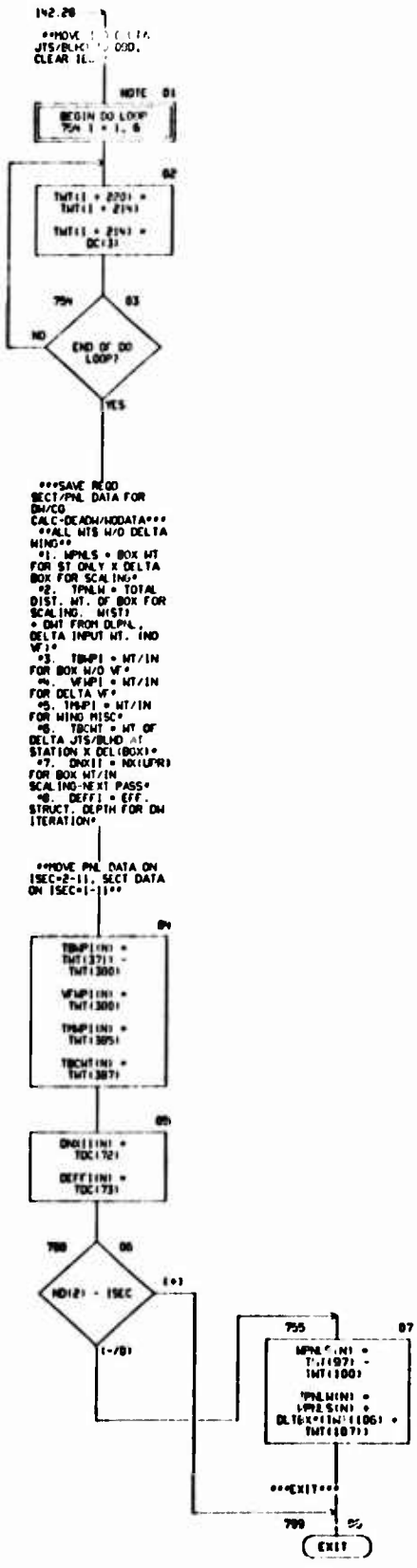

CHART TITLE - NON PROCEDURAL STATEMENTS

```
COMMON T(2000),D(2000),CD(2000),ND(100)
DIMENSION DC(100),TDC(200),TSC(420),TSS(100),
TWT(400),TSEC(300),TC(340),
YSTRC(11),DEL(30),DLPNL(10),
WPLLE(12),WPLTE(12),
WTIP(4),DTTRD(2),DPCDL(10),DTBX(32),
WPNLS(11),TT[illegible](11),TBCWT(11),
TBWP(11),VFWP(11),THWP(11),
SWOMS(2),
DNX(11,11),DEFF(11)
EQUIVALENCE (DC(1),D(140)),(TDC(1),T(134)),(TSC(1),T(154)),
(TSS(1),T(196)),(TWT(1),CD(110)),(TSEC(1),CD(150)),
(SORHD,TWT(175)),(DLPNL(1),T(177)),
(YSTRC(1),TSEC(166)),(CNSID,D(146)),(WTIP(1),T(143)),
(DTBX(1),D(100)),(DTTRD(1),T(266)),(DPCDL(1),T(220)),
(WPLLE(1),T(205)),(WPLTE(1),T(297)),(TC(1),T(360)),
(WPNLS(1),T(645)),(TPNLW(1),T(656)),(TBCWT(1) T(789)),
(TBWP(1),T(745)),(VFWP(1),T(756)),(THWP(1),T(778)),
(DNX(1,1),T(723)),(DEFF(1),T(800)),
(ISEC,ND(55)),(IC,ND(48)),(ND),ND(1),(N,ND(28)),(I,ND(29))
EQUIVALENCE (DEL(1),TWT(25)),(DELNG,T(187)),(DLTBX,T(188)),
(DELLE,T(189)),(DELTE,T(190)),(DNISC,T(191)),
(DLCVU,DEL(1)),(DLSTU,DEL(3)),
(DLCVL,DEL(4)),(DLSTL,DEL(6)),
(DLSKM,DEL(7)),(DLATT,DEL(8)),
(DLTRB,DEL(9)),(DLTRM,DEL(10)),(DLTRM,DEL(11)),
(SWOMS(1),D(410)),
(DELFS,DEL(13)),(DLFSC,DEL(14)),(DLFSM,DEL(16)),
(DELRS,DEL(17)),(DLRSC,DEL(18)),(DLRSM,DEL(20))
```

CHART TITLE - INTRODUCTORY COMMENTS

```
*****************************************************************

      *****SUBROUTINE BHDJT*****
   ***BULKHEAD AND JOINT WEIGHT EVALUATION***

*****************************************************************
```

CHART TITLE - SUBROUTINE BHDJT

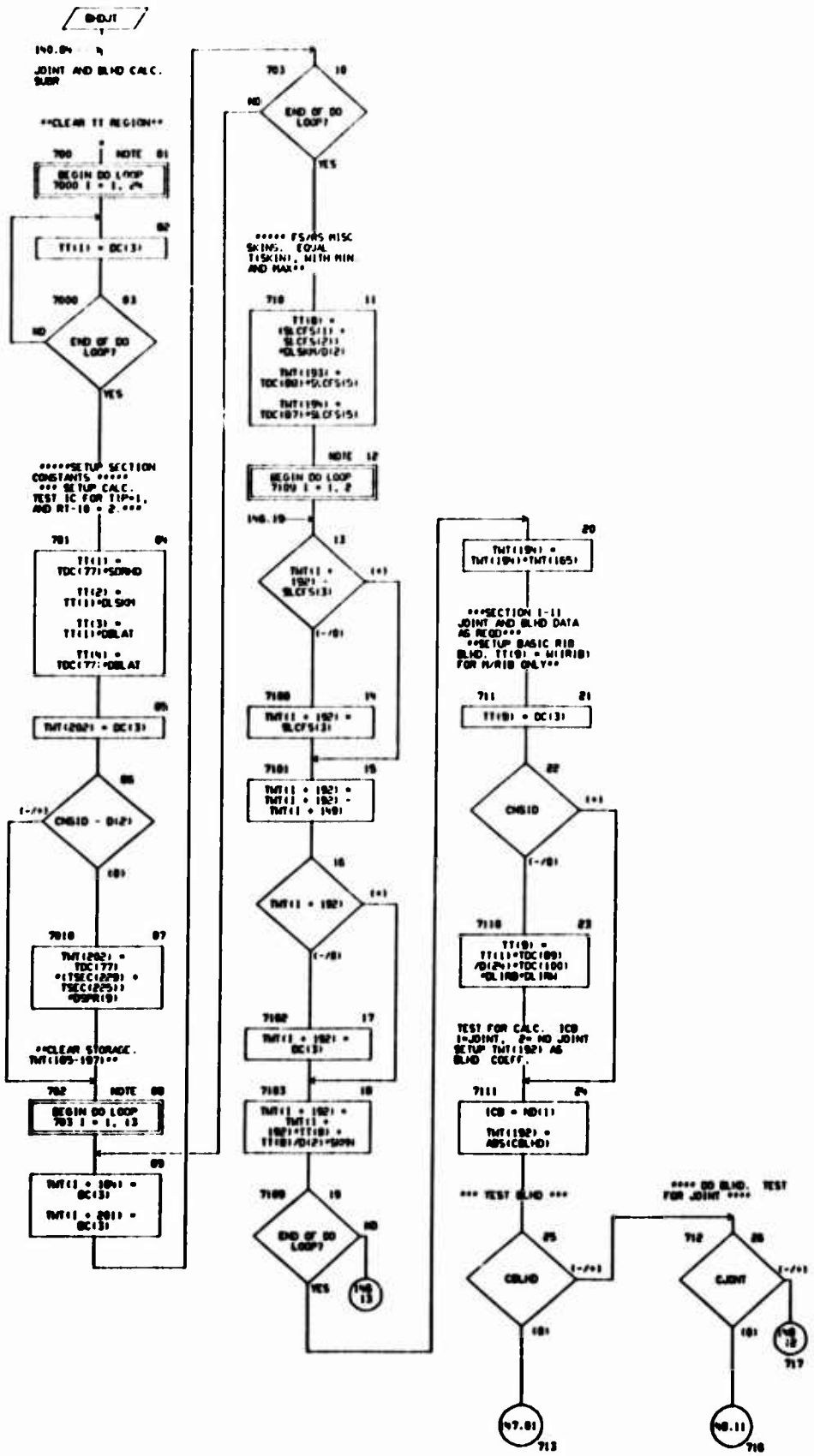

CHART TITLE - SUBROUTINE RHDJT

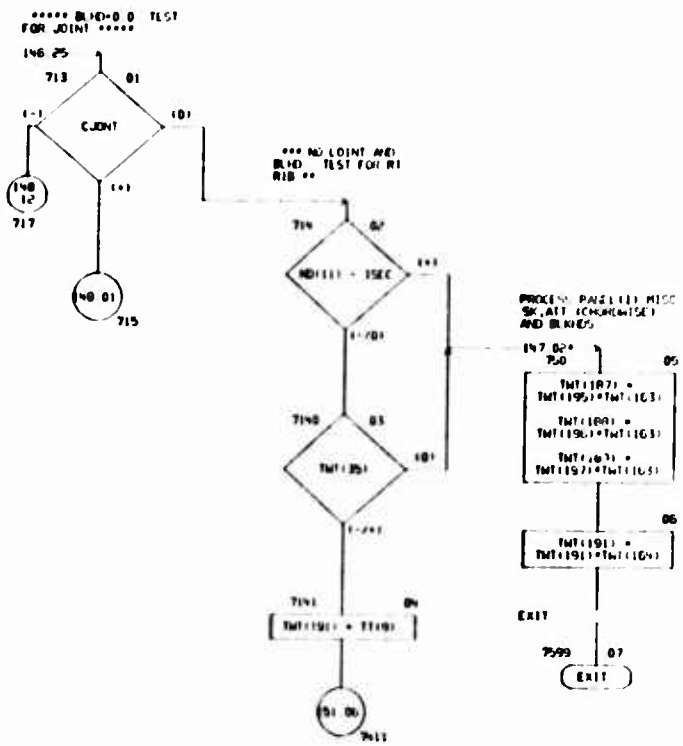

CHART TITLE - SUBROUTINE BHDJT

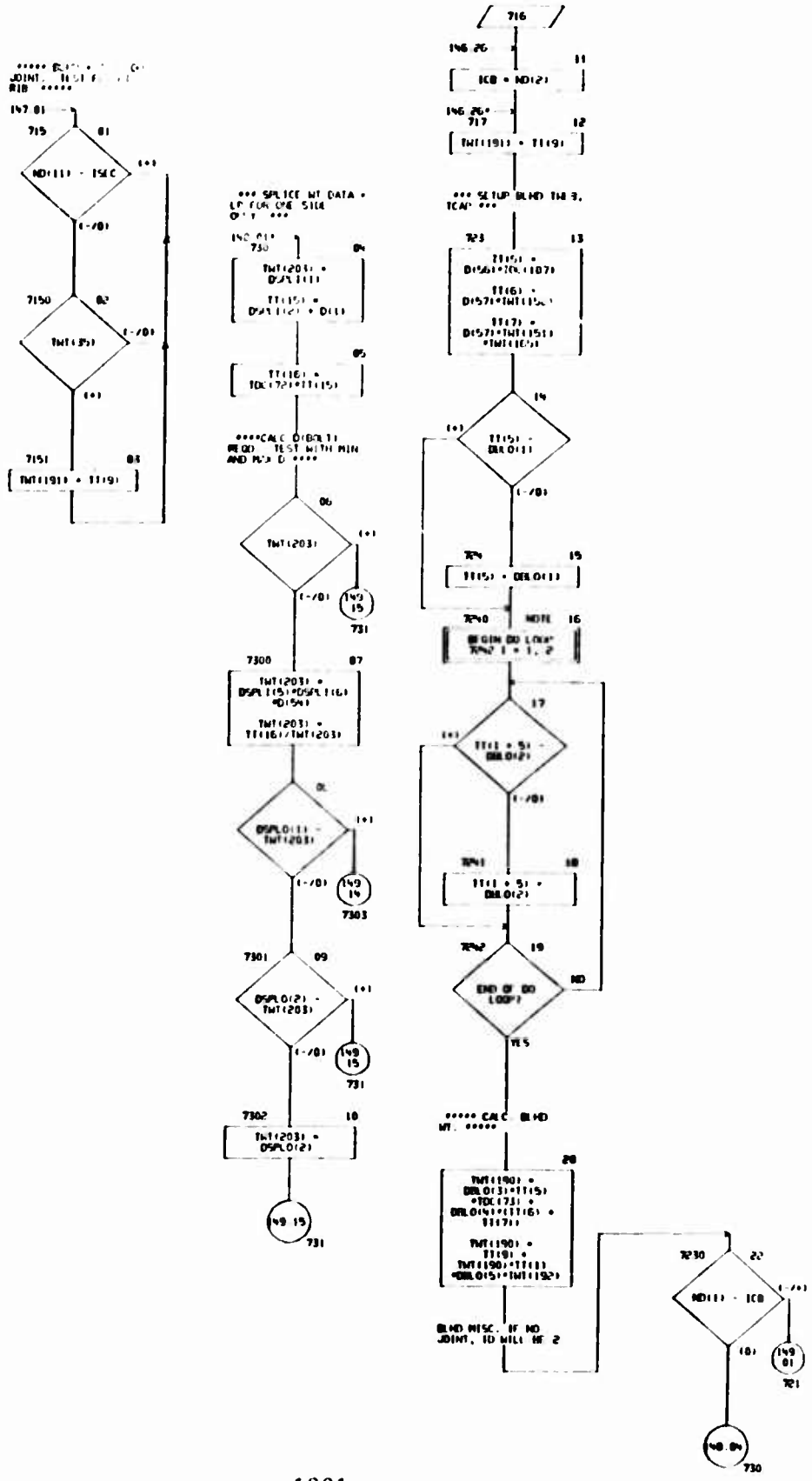

CHART TITLE - SUBROUTINE SHOJI

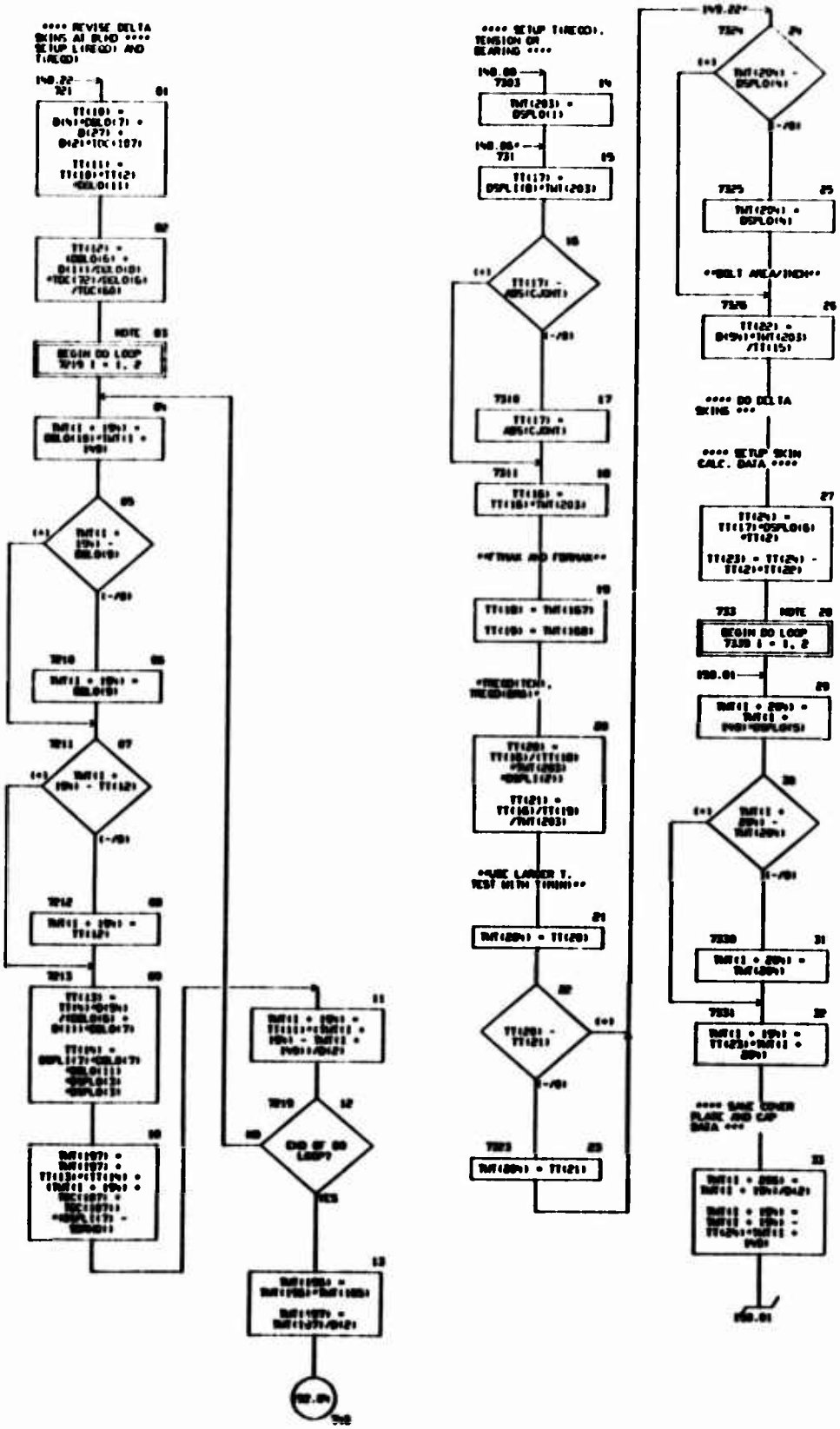

CHART TITLE - SUBROUTINE ENDJT

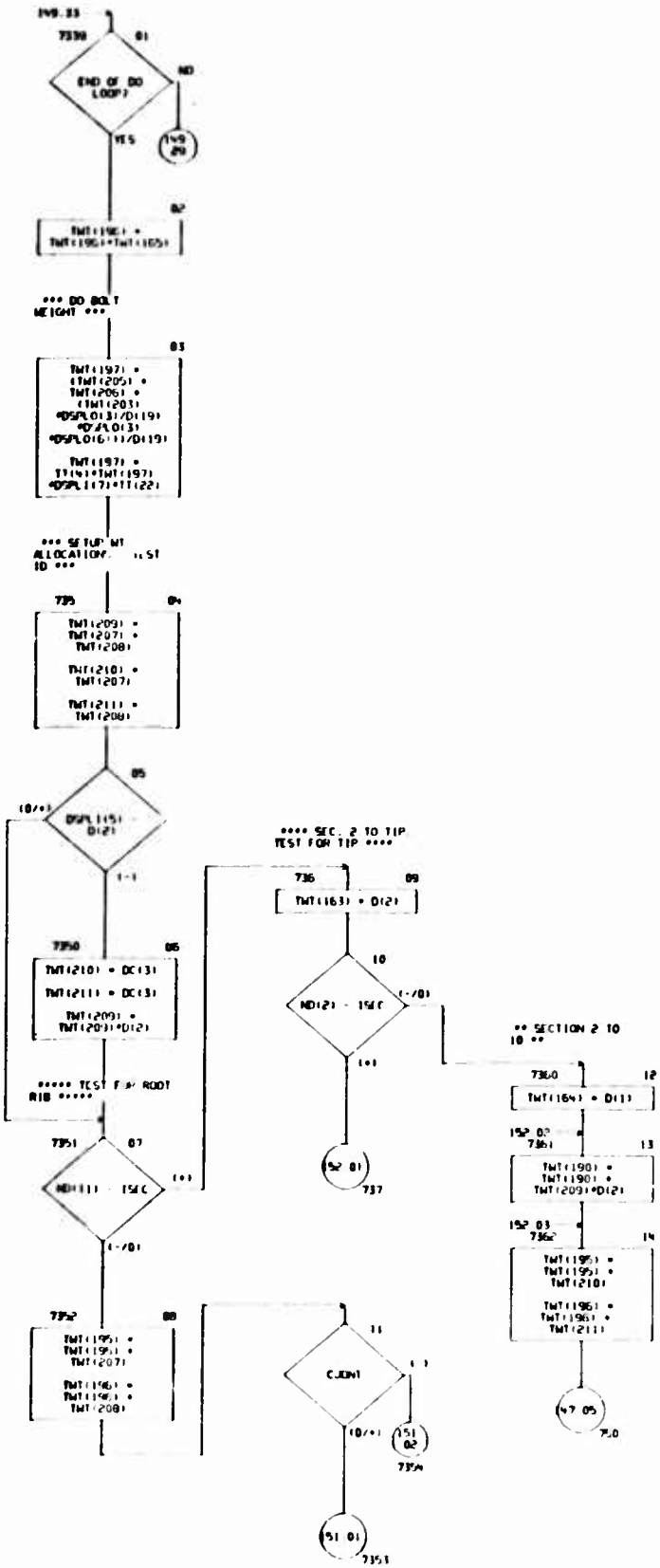

CHART TITLE - SUBROUTINE (MEJT

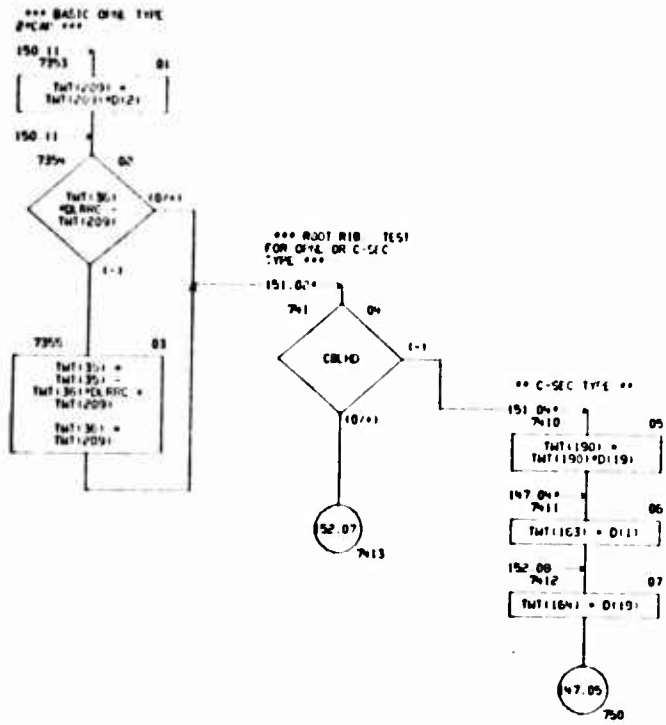

CHART TITLE - SUBROUTINE BKOUT

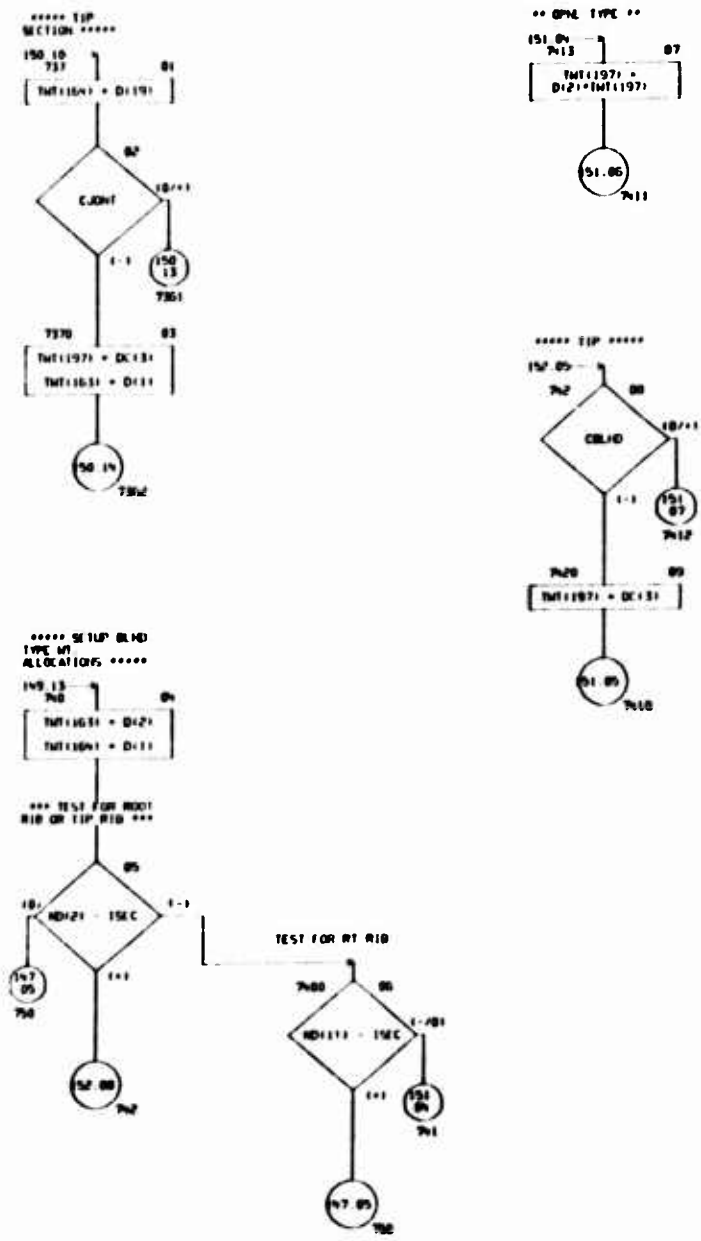

CHART TITLE - NON-PROCEDURAL STATEMENTS

```
COMMON T(2060),D(2060),CD(2000),ND(100)
DIMENSION DC(100),TDC(200),TSC(420),TSS(100),TWT(400),TSEC(300),
TT(24),DEL(30),
DSPR(9),DBLO(11),DSPL(10),
SLCFS(4),
DSPLO(7)
EQUIVALENCE (TDC(1),T(1134)),(TSC(1),T(1154)),(TSS(1),T(1196)),
(DC(1),D(140)),(TWT(1),CD(110)),(TSEC(1),CD(150)),
(TT(1),T(1317)),(DEL(1),TWT(25)),
(CJONT,T(120)),(CBLND,TWT(200)),(CNSID,D(45)),(SWN,D(370)),
(DLARC,DEL(22)),
(SDRND,TWT(17)),
(DLSKN,DEL(7)),(DELAT,DEL(12)),(DLIRD,DEL(9)),(DLIRU,DEL(10)),
(DSPLO(1),D(50)),(DSPR(1),D(47)),(SLCFS(1),D(147)),
(DBLO(1),D(179)),(DSPL(1),D(190)),
(IC,ND(6)),(ICB,ND(7)),(ISEC,ND(55))
```

CHART TITLE - INTRODUCTORY COMMENTS

```
*****************************************************************

      *****SUBROUTINE RTRIB*****
   ***ROOT RIB AND SHEAR TIE WEIGHT EVALUATION***

*****************************************************************
```

CHART TITLE - SUBROUTINE RIRIB

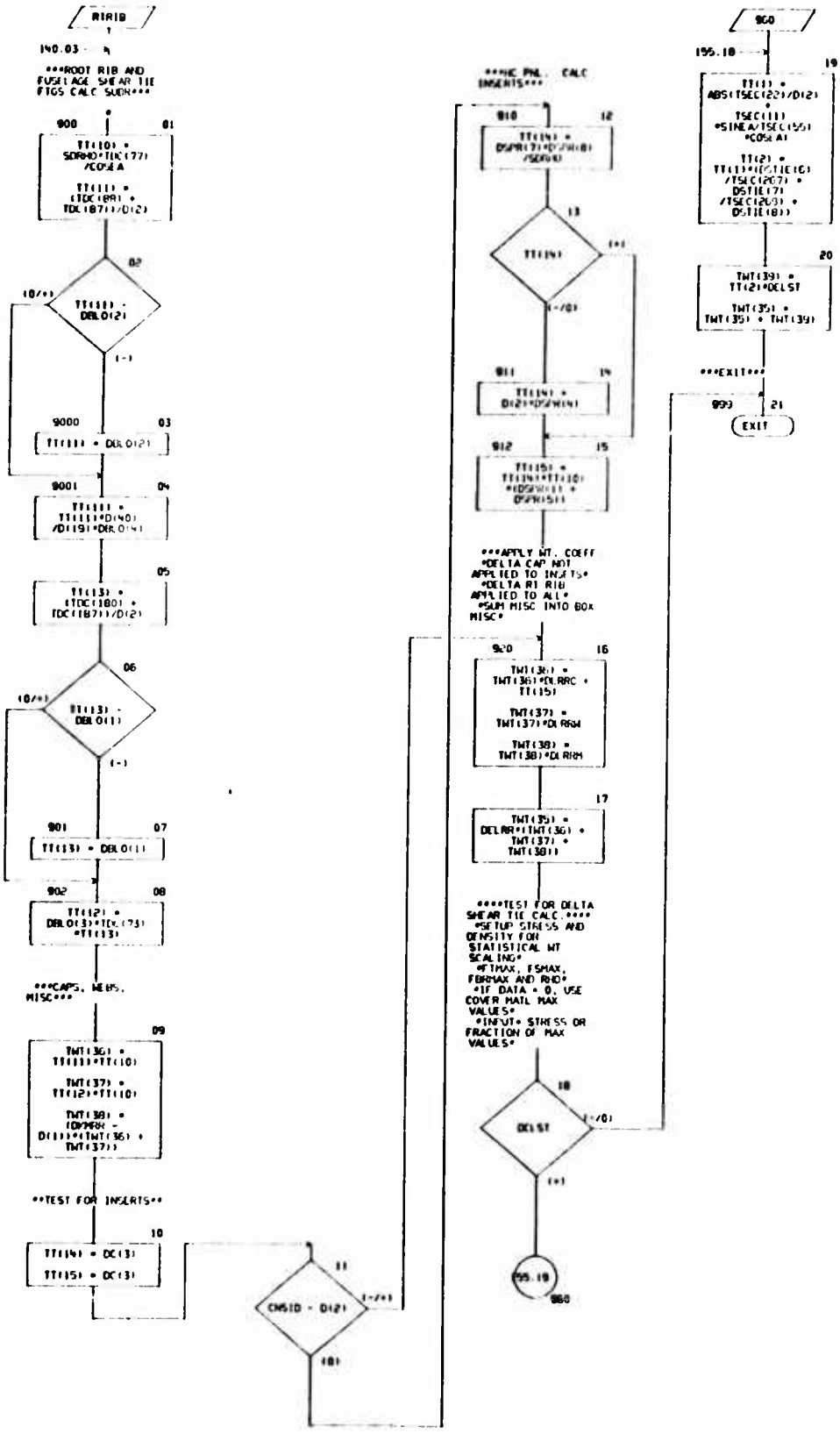

CHART TITLE - NON-PROCEDURAL STATEMENTS

```
COMMON T(2060),D(2060),CD(2000),ND(100)
DIMENSION DC(100),TDC(200),TSC(420),TSS(100),TWT(400),TSEC(300),
TT(2),
DEL(30),
DBLO(11),DSPR(9),
DSTIE(8)
EQUIVALENCE (DC(1),D(140)),(TDC(1),T(134)),(TSC(1),T(154)),
(TSS(1),T(196)),(TWT(1),CD(110)),(TSEC(1),CD(150)),
(TT(1),T(317)),(DEL(1),TWT(251)),(DELST,D(520)),
(DELRP,DEL(21)),(DLRRC,DEL(22)),(DLRRH,DEL(23)),(DLRRM,DEL(24)),
(DSTIE(1),D(521)),(DBLO(1),D(479)),(DSPR(1),D(462)),
(CNSID,D(461)),
(DKMRR,D(69)),(SDRHO,TWT(175)),
(COSEA,T(76)),(SINEA,T(75))
```

CHART TITLE - INTRODUCTORY COMMENTS

```
*****************************************************************

      *****SUBROUTINE WTPIN*****
   ***SECTION WEIGHT PER INCH EVALUATION***

*****************************************************************
```

CHART TITLE - SUBROUTINE WTPIN

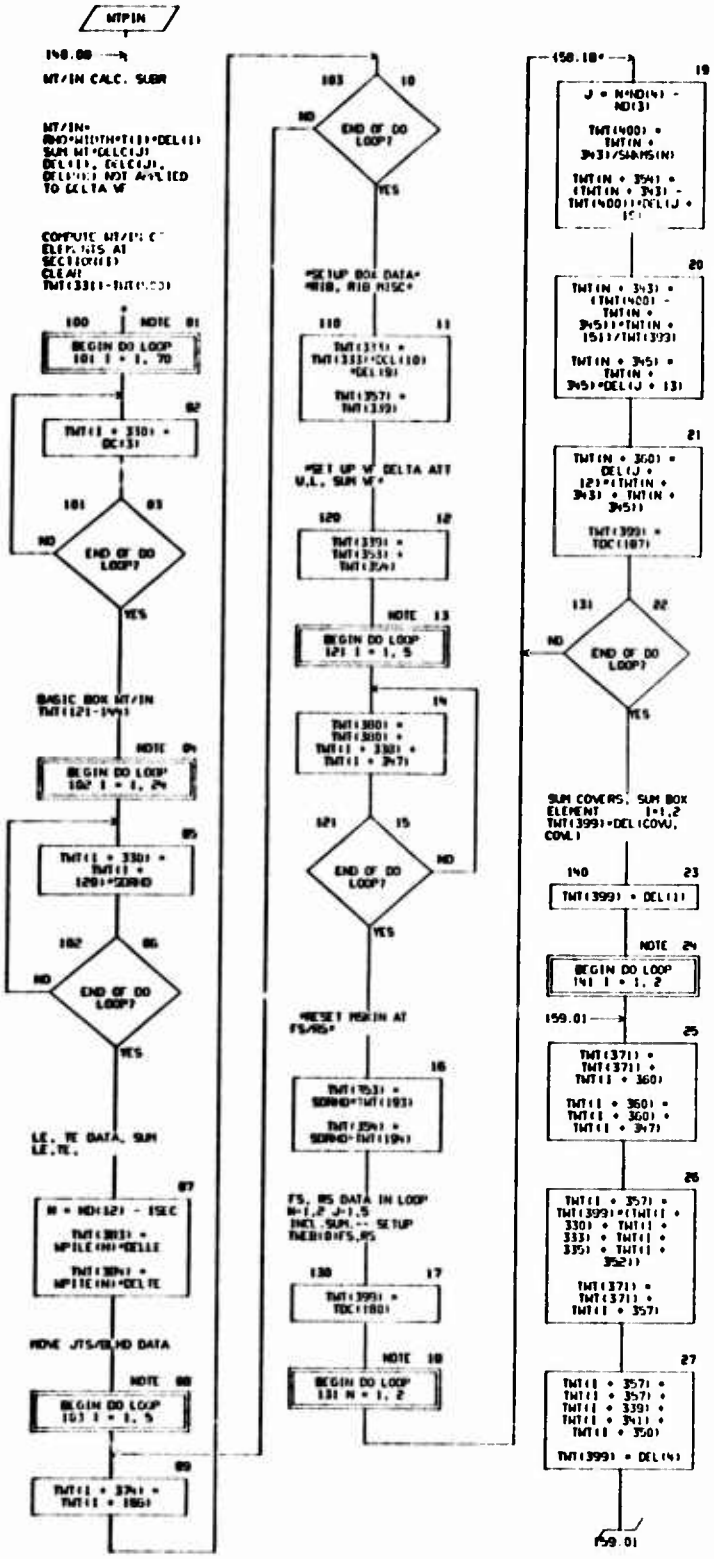

CHART TITLE - SUBROUTINE WTPIN

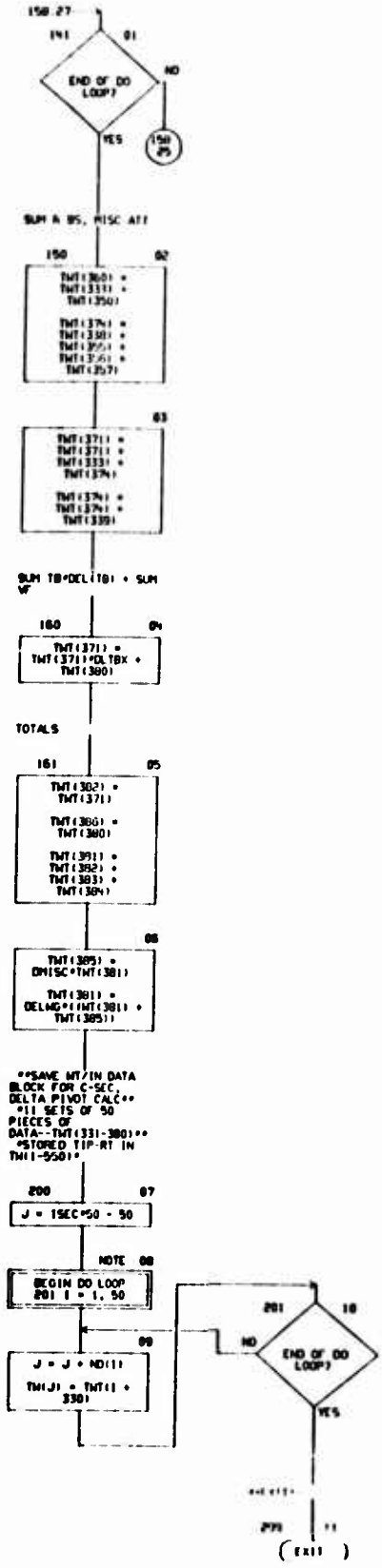

CHART TITLE - NON-PROCEDURAL STATEMENTS

```
COMMON TCOM(7120)
DIMENSION T(2000),D(2060),CD(2000),ND(100),TW(900),
DC(100),TDC(200),TSC(420),TSS(100),TWT(400),TSEC(300),
DEL(30),
SWPS(2),
NPILE(1),NPITE(1)
EQUIVALENCE (T(1),TCOM(1)),(D(1),T(1120)),(CD(1),TCOM(612)),
(ND(1),TCOM(612)),(TW(1),TCOM(622)),(DC(1),D(140)),
(TDC(1),T(134)),(TSC(1),T(154)),(TSS(1),T(190)),
(TWT(1),CD(1101)),(TSEC(1),CD(150)),
(SDRAD,TWT(175)),
(SWPS(1),D(410)),
(NPILE(1),T(263)),(NPITE(1),T(274)),
(DEL(1),TWT(251)),(DELLE,T(189)),(DELTE,T(190)),
(DELWG,T(187)),(DLTBX,T(188)),(DHISC,T(191)),
(ISEC,ND(55)),(N,ND(31)),(J,ND(30))
```

CHART TITLE - INTRODUCTORY COMMENTS

```
*****************************************************************

      *****SUBROUTINE CGSP*****
   ***PARABOLIC CURVE FIT AND EVALUATION***

*****************************************************************
```

CHART TITLE - SUBROUTINE CG3P(XX,ZZ)

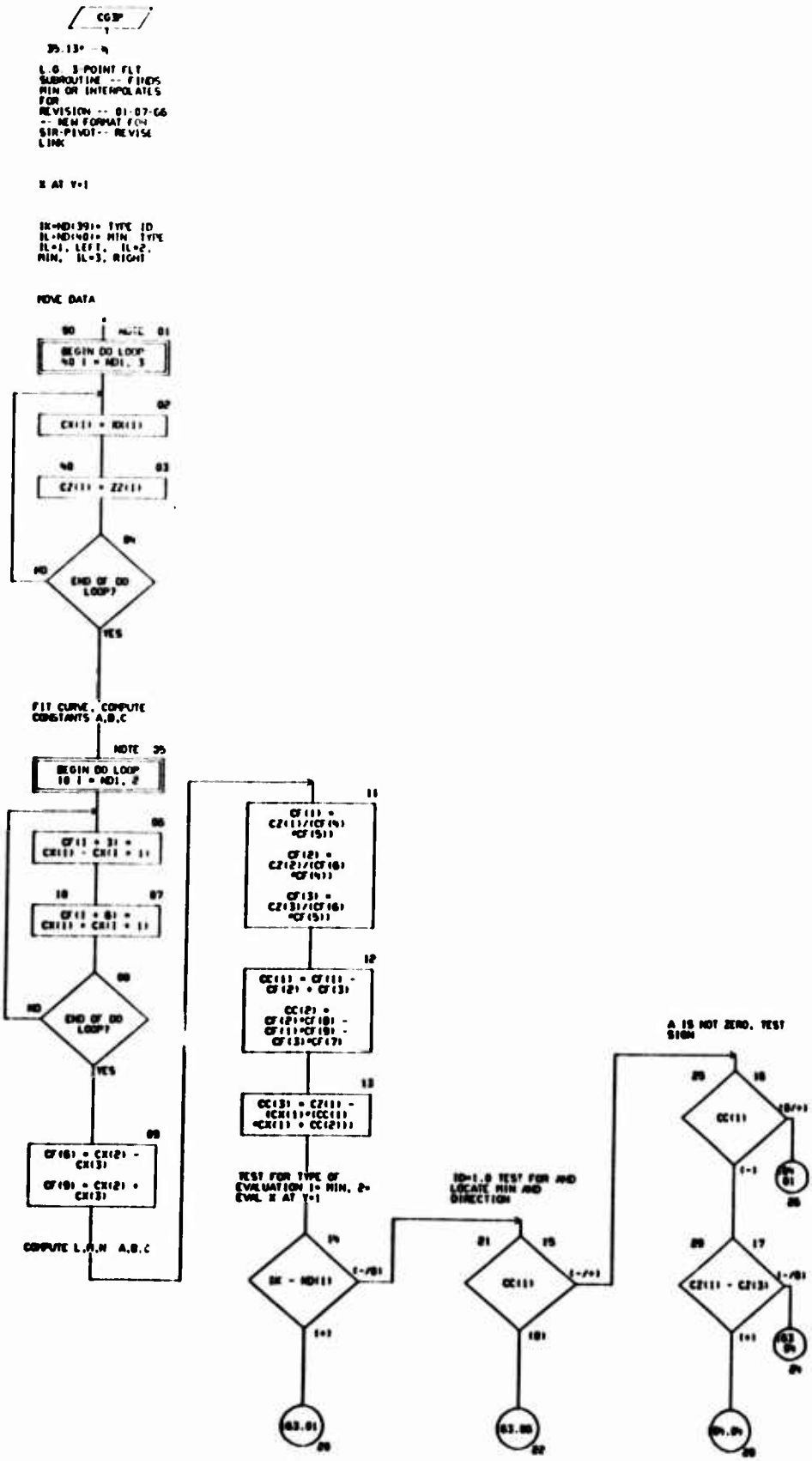

CHART TITLE - SUBROUTINE CG3P(XX,ZZ)

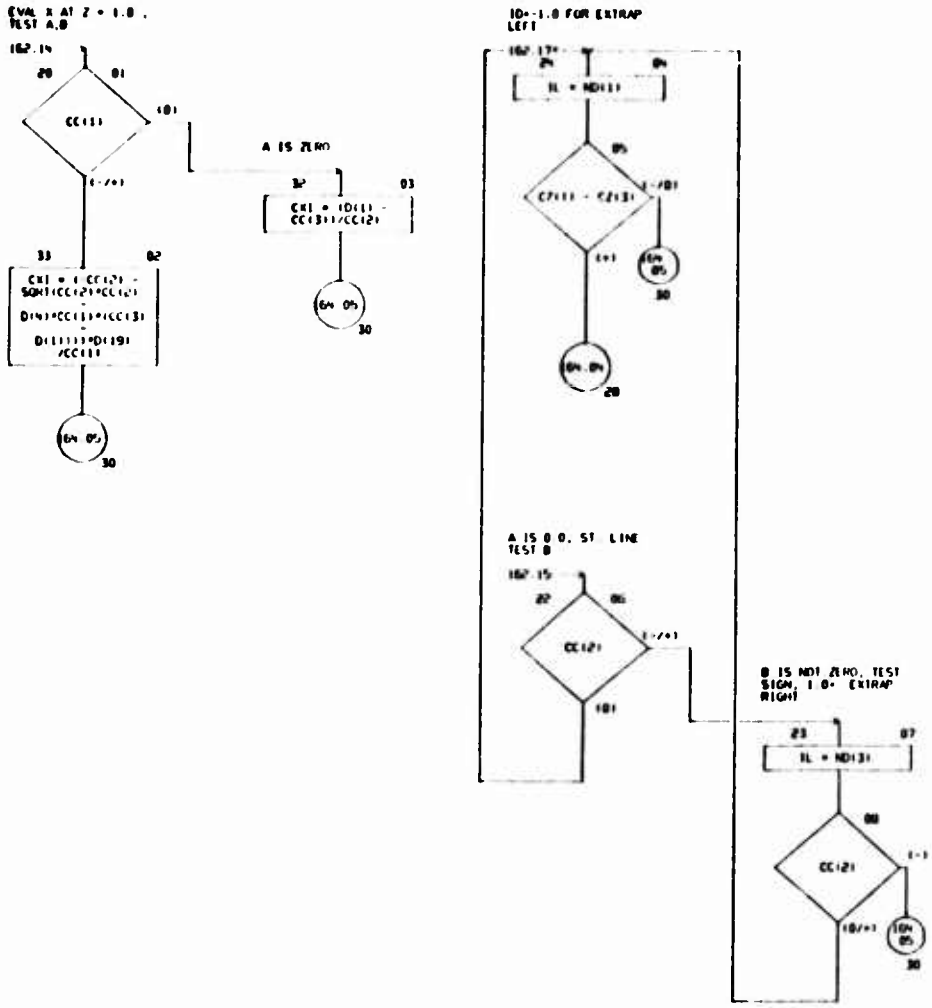

CHART TITLE - SUBROUTINE CGSP(XX,ZZ)

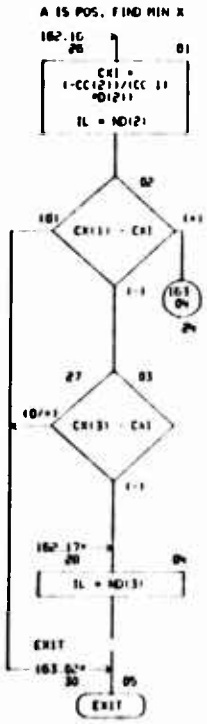

CHART TITLE - NON PROCEDURAL STATEMENTS

```
COMMON T(2000),D(2000),CD(2000),ND(100)
DIMENSION
TDC(200),TSC(420),TSS(1),
CX(3),CZ(3),DX(3),ZZ(3),CF(8),CC(3)
EQUIVALENCE (TDC(1),T(1134)),(TSC(1),T(1154)),(TSS(1),T(1951)),
(CX1,T(1387)),(CX(1),T(1323)),(CZ(1),T(1326)),(CC(1),T(1329)),
(CF(1),T(1332))
EQUIVALENCE (IL,ND(40)),(IK,ND(39)),(ND1,ND(1)),(NDCT,ND(50))
```

CHART TITLE - INTRODUCTORY COMMENTS

```
*****************************************************************

      *****SUBROUTINE SS*****
   ***STRESS STRAIN CURVE EVALUATION AT GIVEN STRESS (FC)***

*****************************************************************
```

CHART TITLE - SUBROUTINE SS(SFC)

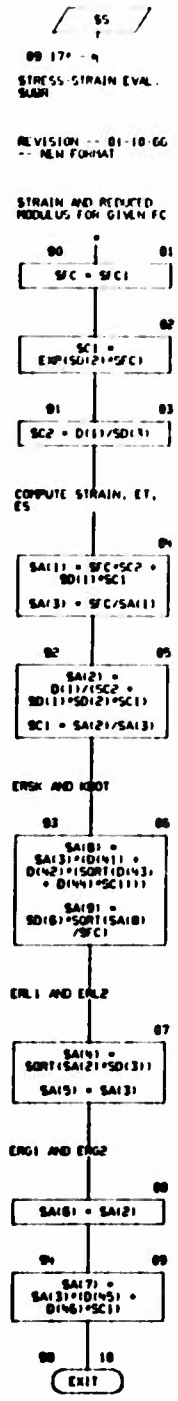

CHART TITLE - NON PROCEDURAL STATEMENTS

```
COMMON T(20000),D(20000),CD(20000),ND(100)
DIMENSION
TDC(200),TSC(4200),TSS(100),
SA(4),SD(7)
EQUIVALENCE (TDC(1),T(1134)),(TSC(1),T(1154)),(TSS(1),T(1196)),
(SA(1),T(1377)),(SD(1),T(1392)),(SFC,T(1391)),(SC2,T(1322)),
(SC1,T(1321))
```

CHART TITLE - INTRODUCTORY COMMENTS

```
*****************************  ***********************************

      *****SUBROUTINE PRTB*****
   ***DESIGN DATA PRINT - TYPE B SECTION DESIGN DETAIL SUMMARY***

*****************************************************************
```

CHART TITLE - SUBROUTINE PRIB

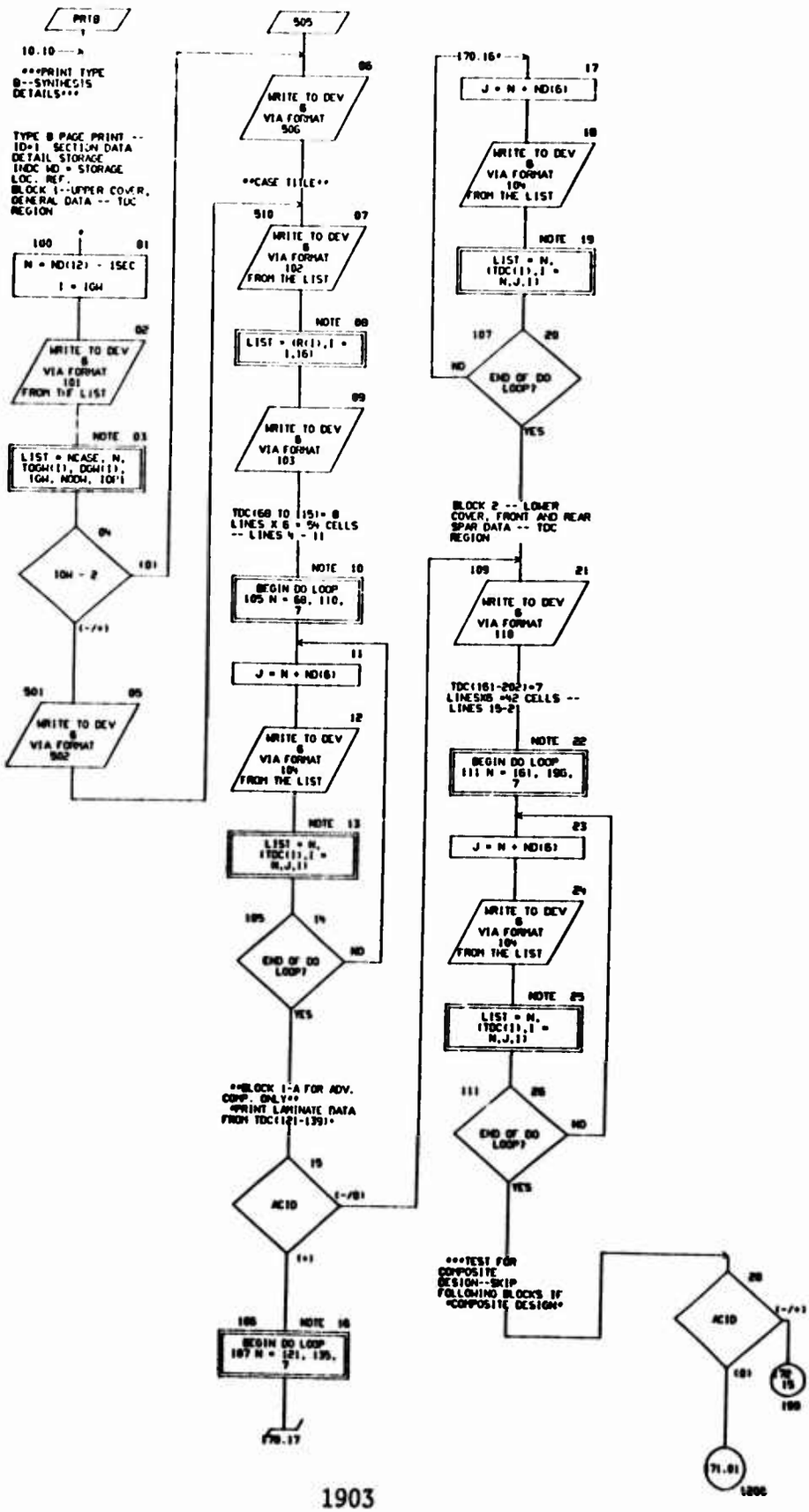

CHART TITLE - SUBROUTINE PRIB

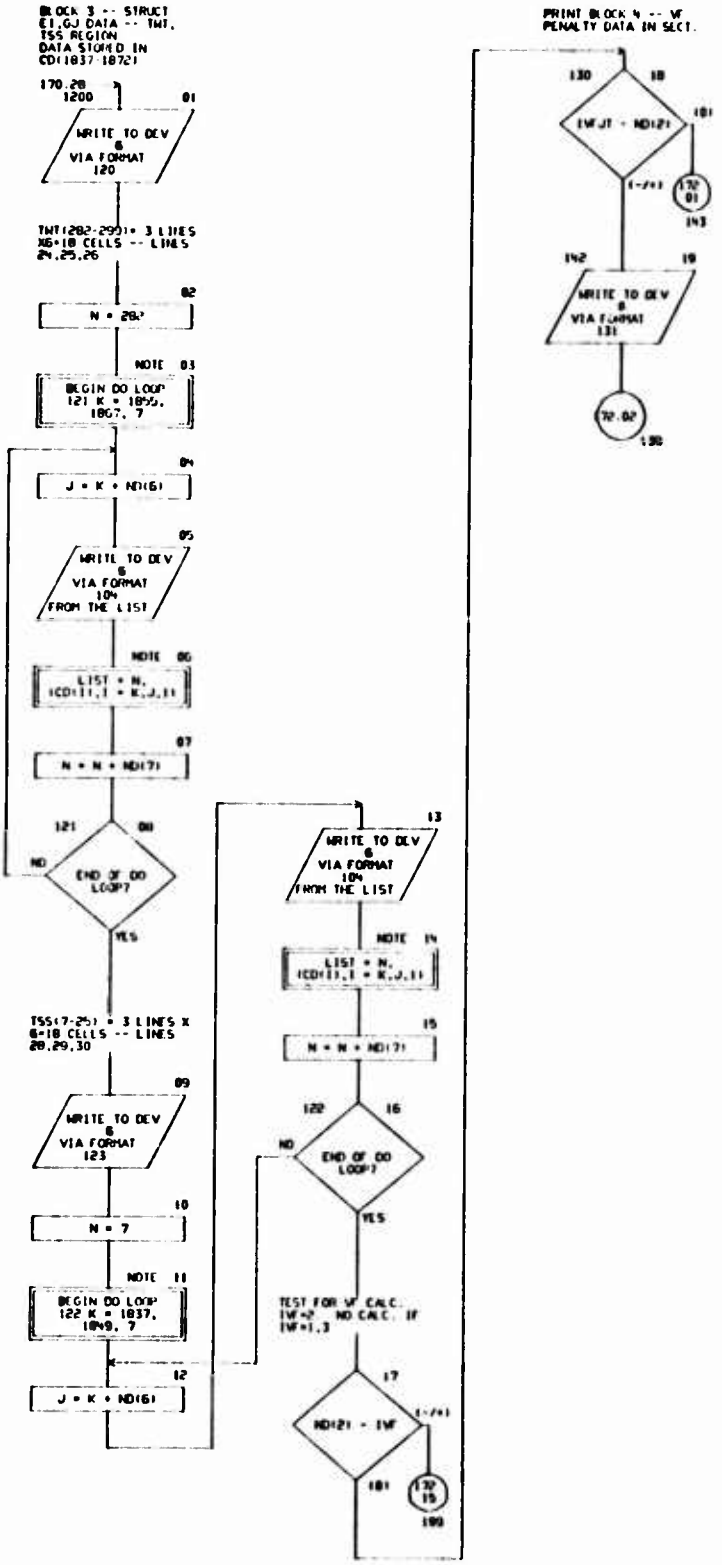

CHART TITLE - SUBROUTINE

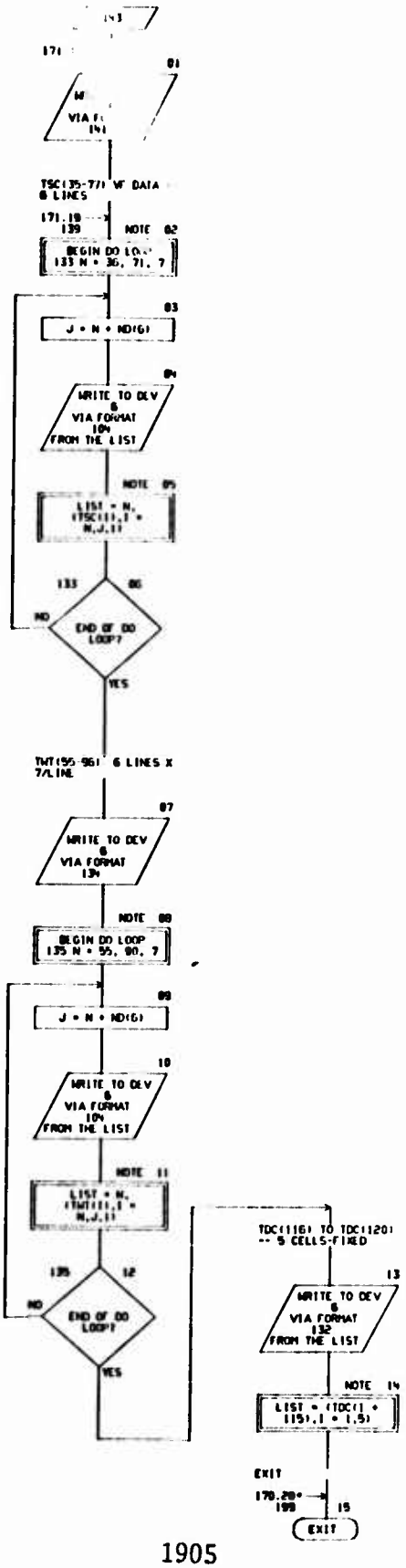

CHART TITLE - NON PROCEDURAL STATEMENTS

```
      COMMON T(2000),D(2000),CD(2000),ND(100)
      COMMON /MISC/ XMISC(100)
      DIMENSION DC(100),TDC(200),TSC(420),TSS(100),TWT(400),TSEC(300),
      TOGW(3),DGW(3),
      R(16)
      EQUIVALENCE (DC(1),D(401)),(TDC(1),T(1134)),(TSC(1),T(1541)),
      (TSS(1),T(1896)),(TWT(1),CD(1101)),(TSEC(1),CD(1501)),
      (R(1),XMISC(6)),
      (TOGW(1),D(801)),(DGW(1),D(1021)),
      (ACID,D(430)),
      (I,ND(29)),(J,ND(29)),(K,ND(30)),(N,ND(31)),
      (IVFJT,ND(53)),(IVF,ND(51)),(IOPI,ND(62)),
      (NOOM,ND(56)),(IGW,ND(57)),(ISEC,ND(55)),
      (NCASE,ND(60)),(NPAGE,ND(65))
101   FORMAT (1H1,9HCASE(I4,10H  SECTION I2,13H DATA   TOGW-F8.1,6H  DGW-
      F8.1,6H  IGW=I1,7H  NOOM=I1,7H  IOPI=I1,12X,13H** PRIB - IP(I)
502   FORMAT(1H+,103X,6H(52) **)
505   FORMAT(1H+,103X,6H(31) **)
102   FORMAT(1H0,8A10/1H ,8A10/)
103   FORMAT (46H  TDC     -**-UPPER COVER AND GENERAL DATA **-)
104   FORMAT (2X,13,7E15.7)
110   FORMAT  (54H0 TDC    -**-LOWER COVER, FRONT AND REAR SPAR DATA-**-
      )
120   FORMAT (42H0 TWT     -**-STRUCTURAL EI, GJ DATA-**-  )
123   FORMAT (6H  TSS )
131   FORMAT (46H  TSC     -**-DELTA VF DATA -- J COMPARISON **- )
141   FORMAT (45H  TSC     -**-DELTA VF DATA -- IVF COMPARISON-**-)
134   FORMAT (6H  TWT )
132   FORMAT (12H  TDC(I16)  ,5F14.8)
```

CHART TITLE - INTRODUCTORY COMMENTS

```
*****************************************************************

      *****SUBROUTINE PRTC*****
   ***DESIGN DATA PRINT - TYPE C SECTION WEIGHT DETAIL SUPP  .***

*****************************************************************
```

CHART TITLE - SUBROUTINE PRTC

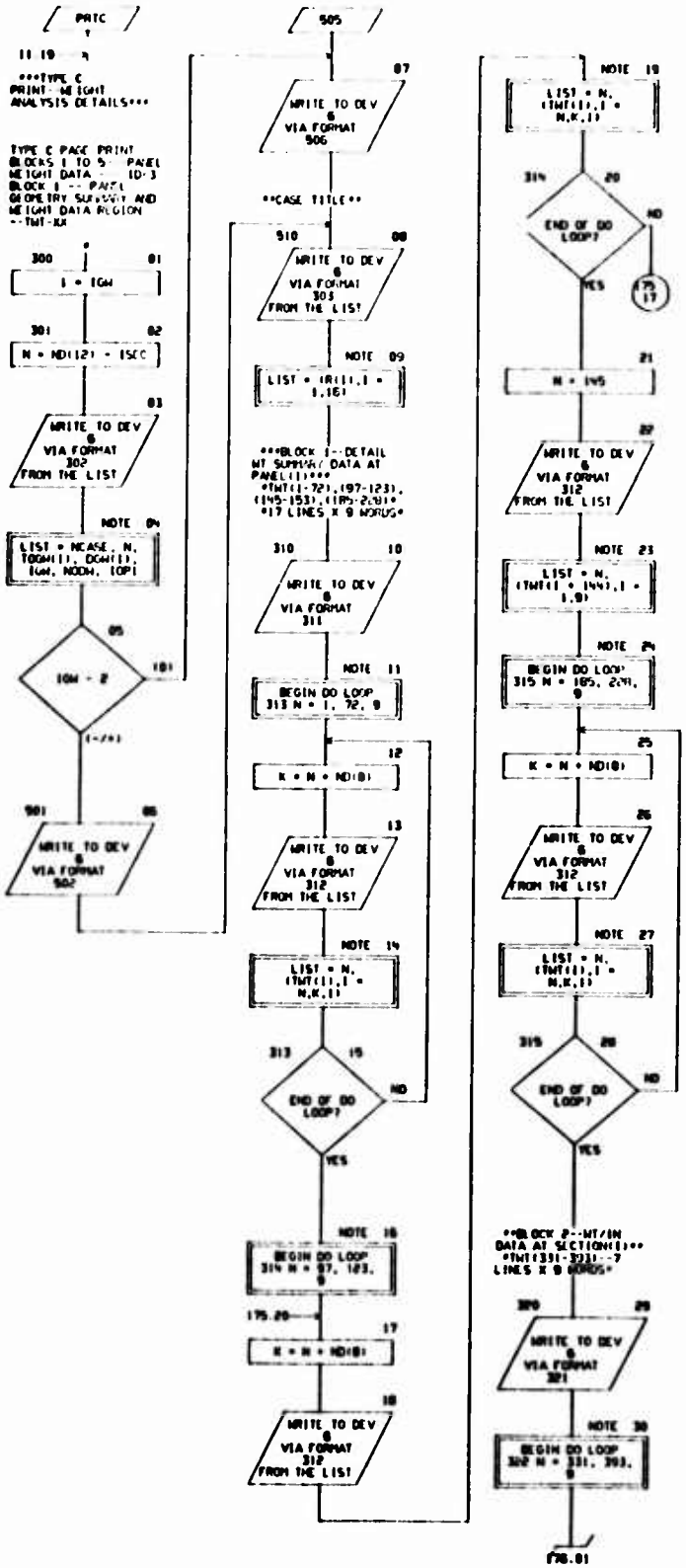

CHART TITLE - SUBROUTINE PRTC

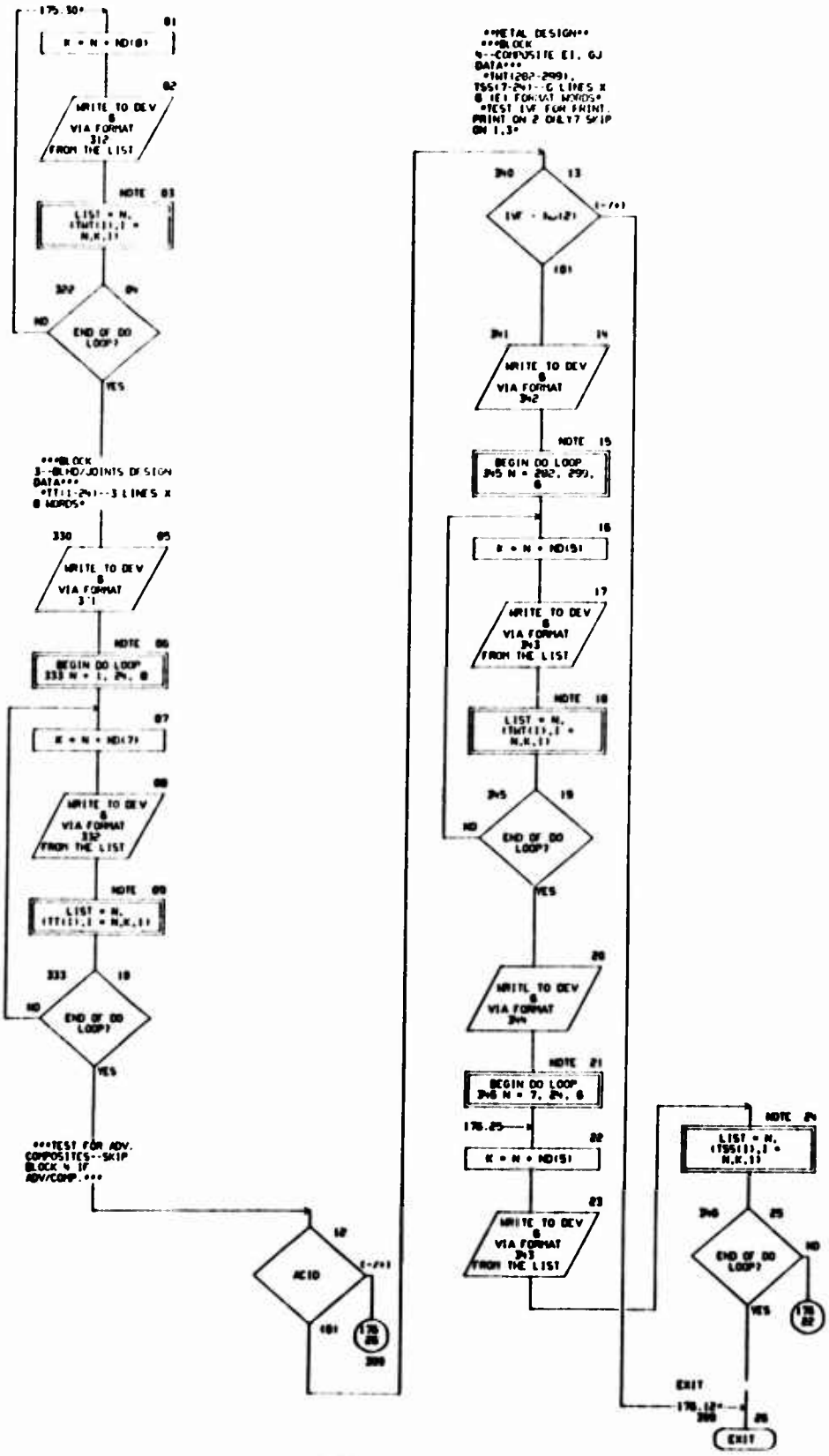

CHART TITLE - NON-PROCEDURAL STATEMENTS

```
      COMMON T(20060),D(20000),CD(20000),ND(100)
      COMMON /MISC/ XMISC(100)
      DIMENSION DC(100),TUC(200),TSC(420),TWT(400),TSEC(300),
      TT(24), TSS(100),
      TOGM(3),DGM(3),
      R(16)
      EQUIVALENCE (DC(1),D(190)),(TDC(1),T(1394)),(TSC(1),T(1594)),
      (TSS(1),T(1950)),(TWT(1),CD(1100)),(TSEC(1),CD(1500)),
      (R(1),XMISC(85)),(TT(1),T(1317)),
      (TOGM(1),D(83)),(DGM(1),D(82)),
      (ACID,D(43)),
      (I,ND(29)),(IF,ND(30)),(IN,ND(31)),
      (IOP1,ND(82)),
      (IGM,ND(57)),(NDOM,ND(56)),(IWF,ND(51)),(ISEC,ND(55)),
      (NEASE,ND(60)),(NPAGE,ND(65))
302   FORMAT (1H1,WHEASE14,8H  PANEL I2,13H DATA   TOGM-F8.1,8H  DGM-F8.
      1,8H  IGM-I1,7H  NDOM-I1,7H  IOP1-I1,14X,13H** PRIC - IP(I)
502   FORMAT(1H+,103X,6H32) **)
503   FORMAT(1H+,103X,6H31) **)
303   FORMAT(1H0,8A10/1H ,8A10/)
311   FORMAT (40H0  TWT      -**-DETAIL WEIGHT DATA-**-  )
312   FORMAT (3X,I3,9F11.4)
321   FORMAT (40H0  TWT      -**-SECTION WT/INCH DATA **-)
331   FORMAT (40H0   TT      -**- JOINTS/BLHD DATA-**-   )
332   FORMAT (3X,I3,8F11.4)
342   FORMAT (40H   TWT      -**-COMPOSITE EI-GJ DATA **-)
343   FORMAT (1H 3X,I3,5E16.8)
344   FORMAT (6H   TSS)
```

CHART TITLE - INTRODUCTORY COMMENTS

```
*****************************************************************

      *****SUBROUTINE PRTBK*****
   ***DESIGN DATA PRINT - DETAIL SYNTHESIS SEARCH DATA***

*****************************************************************
```

CHART TITLE - SUBROUTINE PRTBK

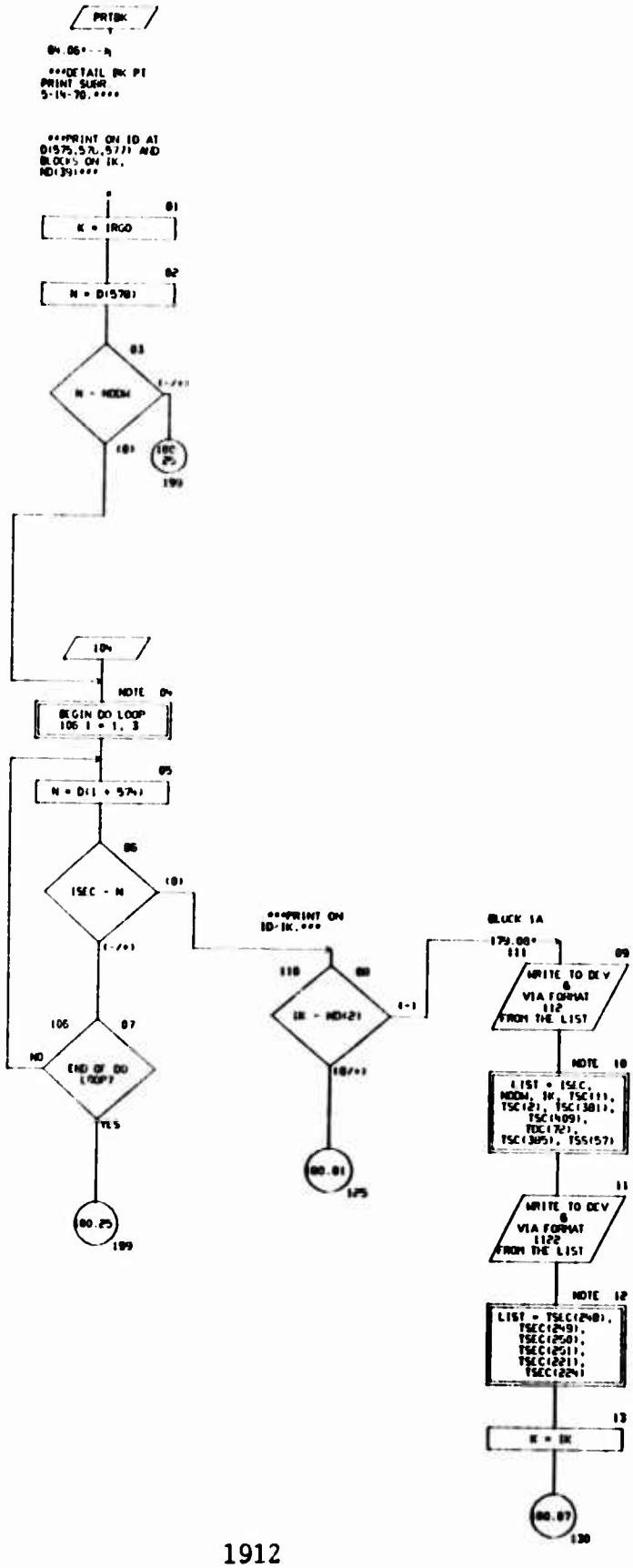

CHART TITLE - SUBROUTINE PRTD

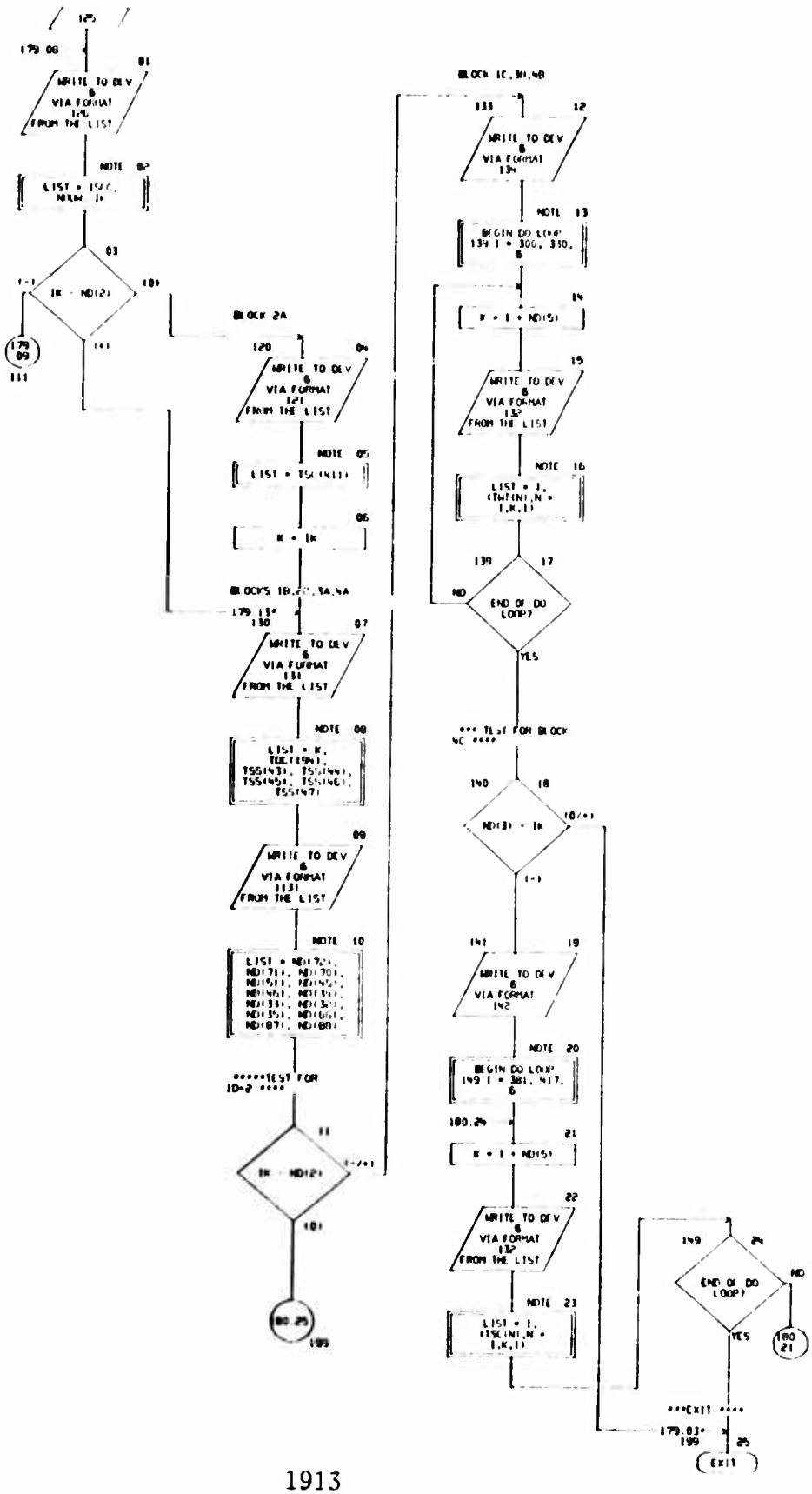

CHART TITLE - NON-PROCEDURAL STATEMENTS

```
      COMMON T(2050),D(2060),CD(2000),ND(100)
      COMMON /IPRINT/ IP(60)
      DIMENSION                                  DC(100),
      TDC(200),TSC(420),TSS(100),TWT(400),TSEC(300)
      EQUIVALENCE (TDC(1),T(139)),(TSC(1),T(154)),(TSS(1),T(156))
      EQUIVALENCE (DC(1),D(140))
      EQUIVALENCE (TWT(1),CD(110)),(TSEC(1),CD(150))
      EQUIVALENCE (IX,ND(39)),(ISEC,ND(55)),(I,ND(31)),(N,ND(30)),
       (K,ND(29)), (IRGO,ND(28)), (NODH,ND(55))
112   FORMAT(1H1,5X,6HISEC =,I3,5X,6HNODH =,I3,5X,4HIK =,I2,31X,
         39H** PRTBK (CALLED FROM TSCH) - IP(33) **//
          10X, 6HTSC(1)  ,F15.6/10X, 6HTSC(2)  ,F15.6/
          10X, 6HTSC(301),F15.6/10X, 6HTSC(409),F15.6/
          10X, 6HTDC(72) ,F15.6/10X, 6HTSC(305),F15.6/
          10X, 6HTSS(97) ,F15.6//)
1122  FORMAT ( 7H0DTHR=,1E13.5,5X, 6HDOTFR=,1E13.5, 5X, 6HDOTHC=,
       1E13.5, 5X, 6HDOTFC=,1E13.5 /15HCRATIO OF F/H =, 1E13.5, 21X,
       10H1 + NF = RATIO =, 1E13.5  )
126   FORMAT(1H1,5X,6HISEC =,I3,5X,6HNODH =,I3,5X,4HIK =,I2,31X,
         39H** PRTBK (CALLED FROM STRG) - IP(33) **//)
121   FORMAT (1H0,6HTSC(411)=,F10.6)
131   FORMAT (1H0,8X,     1HK,10H  TDC(194),   9SH   TSS(43)    TSS(44)
         TSS(45)    TSS(46)    TSS(47) /   7X,I3,F10.6,5F11.7)
1131  FORMAT (5H0IBT=, I2,2X,4HIMX=, I2,2X, 4HIRO=, I2, 3X, 4HISK=, I2,
      2X, 5HISK1=, I2, 2X, 5HISK2=, I2, 2X, 4HIL1=,I2, 2X, 4HIL2=, I2,
      2X, 4HIL3=, I2, 4HIMN=, I2 //3X,
      39HCALL TSCH FROM SFCH=, I4, 3X, 21HCALL STBAR FROM TSCH=,I4, 3X,
      19HSTRINDER SIZE CODE=, I4)
132   FORMAT (1H 3X,13,8E10.8)
134   FORMAT(8H0  TWT)
142   FORMAT (8H0  TSC)
```