UNCLASSIFIED

AD NUMBER

AD911508

NEW LIMITATION CHANGE

TO

Approved for public release, distribution unlimited

FROM

Distribution authorized to U.S. Gov't. agencies only; Test and Evaluation; 12 MAR 1973. Other requests shall be referred to Commanding General, US Army Electronics Command, Attn: AMSEL-TL-PE, Ft Monmouth, NJ 07703.

AUTHORITY

USAEC ltr, 24 Oct 1973

THIS PAGE IS UNCLASSIFIED

AD

AD911508

Research and Development Technical Report
ECOM-0209-1

RAPID CHARGER FOR MAINTENANCE-FREE BATTERIES
SEMI-ANNUAL REPORT

By
J.A. Herrmann

D D C
RECEIVED
JUL 9 1973
B

March 1973

Distribution Statement

Distribution limited to U.S. Government agencies only; Test and Evaluation; 12 March 1973. Other requests for this document must be referred to Commanding General, U.S. Army Electronics Command ATTN; AMSEL-TL-PE, Ft Monmouth, N.J. 07703

ECOM

UNITED STATES ARMY ELECTRONICS COMMAND · FORT MONMOUTH, N.J.

Contract No. DAAB07-71-C-0209
Gould Inc., Gould Laboratories
Energy Research
P.O. Box 3140, St. Paul, MN 55165

NOTICES

Disclaimers

The findings in this report are not to be construed as an official Department of the Army position, unless so designated by other authorized documents.

The citation of trade names and names of manufacturers in this report is not to be construed as official Government indorsement or approval of commercial products or services referenced herein.

Disposition

Destroy this report when it is no longer needed. Do not return it to the originator.

TR ECOM-0209-1

Reports Control Symbol
OSD-1366

RAPID CHARGER FOR MAINTENANCE-FREE BATTERIES

SEMI-ANNUAL REPORT

1 May 1971 to 31 December 1971

Contract DAAB07-71-C-0209

Distribution limited to U.S. Government agencies only; Test and Evaluation; 12 March 1973. Other requests for this document must be referred to Commanding General, U.S. Army Electronics Command.
ATTN: AMSEL-TL-PE, Ft. Monmouth, N.J. 07703

Prepared By:
J.A. Herrmann

Gould Inc., Gould Laboratories
Energy Research
1110 Highway 110
Mendota Heights, Minnesota 55118

For

U.S. Army Electronics Command
Fort Monmouth, New Jersey

ABSTRACT

The purpose of this program was to evaluate various charging approaches for rapid charging sealed nickel-cadmium, vented nickel-cadmium, and silver zinc-oxide batteries. A programmable charger was to be designed, manufactured and used as a tool during the evaluation of the various charging approaches.

To accomplish the objectives, a paper design and breadboard of the circuitry for the programmable charger was initiated at the beginning of the contract. Throughout the first nine months of the program, the charger was designed, breadboard portions were evaluated, and final hardware built. Upon the completion of initial hardware, the system was checked-out and problem areas corrected. The charger was designed to have five basic operating modes with each having necessary controls for varying charge current, discharge current, charge frequency, and mode selection.

As of the time period covered by this report, no testing of charge approaches was started; therefore, the only results which can be stated are that a working programmable charger was designed, fabricated, and tested.

TABLE OF CONTENTS

	Page No.
I. INTRODUCTION	1
II. CHARGER REQUIREMENTS	2
A. General Discussion	2
B. Charger Operating Modes	2
C. Charger Special Features	5
III. THEORY OF OPERATION	6
A. System Block Diagram	6
IV. CHARGER SYSTEM DESCRIPTION	15
A. System Configuration	15
B. System Characteristics	15
C. Control Module – Detail Description	17
D. Power Module Front Panel Description	26
V. OPERATING INSTRUCTION	27
A. Charger Operation	27
B. Installation Instructions	29
VI. SCHEMATIC AND WIRING DIAGRAM	36

I. INTRODUCTION

This report meets the requirements of ELIN A002 and covers the description of work performed under U.S. Army Electronics Command Contract Number DAAB07-71-C-0209 entitled, "Rapid Charger for Maintenance-Free Batteries" from 1 May 1971 through 31 December 1971. During this period of time, a programmable charger was designed and constructed per Paragraph 3.6 of "Technical Guidelines for Rapid Charger for Maintenance-Free Batteries" dated 28 June 1970. This report will cover: 1) the design philosophy and theory of operation of the charger, 2) physical description of the charger controls, 3) the operations instructions for the charger, and 4) circuit schematic diagrams and wiring diagrams for the charger.

II. CHARGER REQUIREMENTS

A. General Discussion

The basic requirements for the programmable charger were defined by the U.S. Army Electronics Command in Paragraph 3.6 of "Technical Guidelines for Charger for Maintenance-Free Batteries" dated 28 June 1970. These requirements define the modes of operation, the current, frequency, and pulse width ranges to be covered, the maximum average charge and discharge current levels, the sense outputs, and the special features which are to be built into the charger.

B. Charger Operating Modes

The charger was to have five basic operating modes as follows:

1) Constant Current Charging
2) Pulsed Charging at a Fixed Repetition Period
3) Pulsed Charging with Discharge Pulses at a Fixed Repetition Period
4) Pulsed Charging at a Variable Repetition Rate
5) Pulsed Charging with Discharge Pulses at a Variable Repetition Rate

Each operating mode has its own requirements and characteristics; these are described in detail in the following paragraphs.

1. Constant Current Charging

In this mode of operation, charging current is delivered to the battery in the form of a DC current which remains constant during the charge. The range of current values covered by this mode is 1.0 through 35.0 amperes.

2. Pulsed Charging at a Fixed Repetition Period

Charging in this mode is accomplished by providing pulses of current to the battery being charged; these pulses are adjustable in amplitude, width, and period (reciprocal of frequency). The ranges of each variable parameter are:

- Amplitude – 1.0 – 50.0 amperes
- Width – 10% – 90% of repetition period
- Repetition Period – 100 microsecond – 20 milliseconds

The parameters above are continuously adjustable over the ranges shown, the only limitation is that the average charge current (amplitude x % width)/100 cannot exceed 35 amperes.

3. Pulsed Charging with Discharge Pulses at a Fixed Repetition Period

When operating in this mode, current pulses are provided to the battery in a direction to charge it. After a predefined number of charging pulses, a discharge pulse is applied to the battery. Thus, the battery receives some number of coulombs of charge and then gets discharged by some lesser number of coulombs throughout the time the battery is left on the charger. In this mode, the charge pulse amplitude, charge pulse width, repetition period, discharge pulse amplitude, discharge pulse width, and ratio of charge pulses to discharge pulses are variable over the following ranges:

- Charge pulse amplitude – 1.0 - 50.0 amperes
- Charge pulse width – 10% - 90% of repetition period
- Repetition period – 100 microseconds - 20 milliseconds
- Discharge pulse amplitude – 1.0 - 100 amperes
- Discharge pulse width – 1% - 50% of repetition period
- Charge pulses per discharge pulse – 1 - 15

The charge pulse amplitude, charge pulse width, repetition period, discharge pulse amplitude, and discharge pulse width are continuously adjustable over the ranges defined above; the ratio of charge pulses to discharge pulses is adjustable in integer values over the range above. Four limitations have been imposed on this mode:

1) Average charge current $\frac{(\text{charge pulse amplitude x \% charge pulse width})}{100}$ cannot exceed 35 amperes.

2) Average discharge current $\frac{(\text{discharge pulse amplitude x \% discharge pulse width})}{100}$ cannot exceed 5 amperes.

3) The net charging current to the battery must be greater than zero.

4) The sum of charge pulse width and discharge pulse width must be less than the repetition period (% charge pulse + % discharge pulse $<$100%).

4. Pulsed Charging at a Variable Repetition Rate

Operation in this mode results in charging current to the battery in the form of pulses; the repetition rate of these pulses is dependent upon the state-of-charge of the battery. Pulses are initiated when the open-circuit battery voltage drops below a preset value. Near the beginning of charge, the battery voltage will drop below the preset voltage rapidly, thus causing the pulse repetition period to nearly equal the pulse width; then, as the battery reaches full charge, the pulses become 'spread-out' due to the slower decay of the open-circuit voltage. The average charging current then becomes nearly constant at the beginning of charge and tapers as the battery reaches full charge; the value of current at the end-of-charge is dependent upon the value of voltage set by the operator. Charge pulse amplitude, charge pulse width, and pulse trigger voltage are continuously adjustable over the ranges below:

- Charge pulse amplitude – 1.0 - 50.0 amperes
- Charge pulse width – 100 microseconds - 50 milliseconds
- Pulse trigger voltage – 0.0 - 100.0 volts

The only limitation placed on this operating mode is that the average charge current cannot exceed 35.0 amperes.

5. Pulsed Charging with Discharge Pulses at a Variable Repetition Rate

In this mode, the current through the battery consists of a discharge pulse followed immediately by a charge pulse; the repetition rate of the pulses is variable, depending upon the state-of-charge of the battery. Pulses are initiated by the decay of the open-circuit battery voltage; when the open-circuit battery voltage drops below a preset value, a discharge pulse of predefined amplitude and width is enabled; then, immediately following the discharge pulse is a charge pulse of predefined amplitude and width. Near the beginning of charge, the discharge/charge pulse repetition period is nearly equal to the sum of the charge and discharge pulse widths; as the battery reaches full charge, the discharge/charge pulses 'spread-out', thus causing a tapering of the average charge current delivered to the battery. Variable parameters in this operating mode are charge pulse amplitude, charge pulse width, and pulse trigger voltage; these are continuously adjustable over the following ranges:

- Charge pulse amplitude – 1.0 - 50.0 amperes
- Charge pulse width – 100 microseconds – 50 milliseconds
- Discharge pulse amplitude – 1.0 - 100 amperes
- Discharge pulse width – 1.0 microseconds – 8.33 milliseconds
- Pulse trigger voltage – 0.0 - 100 volts

Three limitations have been imposed on this mode:

1) The average current delivered during the charge pulse cannot exceed 35 amperes.

2) The average current taken out of the battery during discharge pulses cannot exceed 5.0 amperes.

3) The net charging current delivered to the battery must be greater than zero.

C. Charger Special Features

Built into the charger were to be several features which give the charger much versatility for laboratory testing. These features include:

- Charging of either 12 volt or 24 volt batteries
- A device for determining the 80% charge point for the battery under test
- Automatic mode transition from one operating mode to another when the battery under charge has reached the 80% charge point
- Termination of charge either by average battery voltage (adjustable over a range compatible with a 24 volt battery) or by an adjustable two-hour timer
- Sense outputs for monitoring the waveform of battery voltage and battery current
- Normalized sense outputs for monitoring the average battery voltage and average battery current (using ± 1 VDC for normalized outputs)

III. THEORY OF OPERATION

The overall charging system takes 208 VAC, single-phase, 60 Hz power and converts it to charging current which is applied to the battery in the form dictated by the program selected by the operator. A simplified block diagram of the system is shown in Figure III-1; this block diagram shows the basic building blocks of the charger.

A. System Block Diagram

Shown in Figure III-1 is a simplified block diagram of the charging system, showing the major blocks used to perform the power conversion and control functions. The overall operation and function of each block is as follows.

1. Basic System Theory

The AC power is converted to DC power in the block entitled 'Programmable DC Power Supply'; this DC power is then applied to the battery through the 'Charge Current Pass Element'. The width, repetition rate, and timing of charging pulses are controlled by the 'Pulse Generator and Control Logic'; the amplitude of the charging pulses is held constant at the preset value by a closed control loop consisting of the 'Current Sensor and Amplifiers' and the 'Charge Control Logic'.

When discharge pulses are desired, current from the battery is passed through the 'Discharge Power Supply and Discharge Pass Element'. The width, repetition rate, and timing of the discharge pulses are also controlled by the 'Pulse Generator and Control Logic'. The amplitude of the discharge pulses is held constant at the preset value by a closed control loop consisting of the 'Current Sensor and Amplifiers' and the 'Discharge Control Logic'. If the battery is not capable of delivering the desired pulse amplitude, the 'Discharge Power Supply' is 'turned-on' and acts as a driving source for current allowing the control loop to be satisfied.

The 'Battery Voltage Sensor' serves two functions: 1) to tell the 'Control Logic' to terminate charge when the average battery voltage reaches some predefined value, and 2) to initiate current pulses in the variable repetition rate modes.

The 'Charge Integrator' is the device for sensing the 80% charge point; when the 80% charge point is reached, a signal is sent to the 'Control Logic' to initiate the transfer of operation from one operating mode to another, if such a transfer is to occur. This integrator also 'tells' the operator how much capacity has been returned to the battery at any point during the charge.

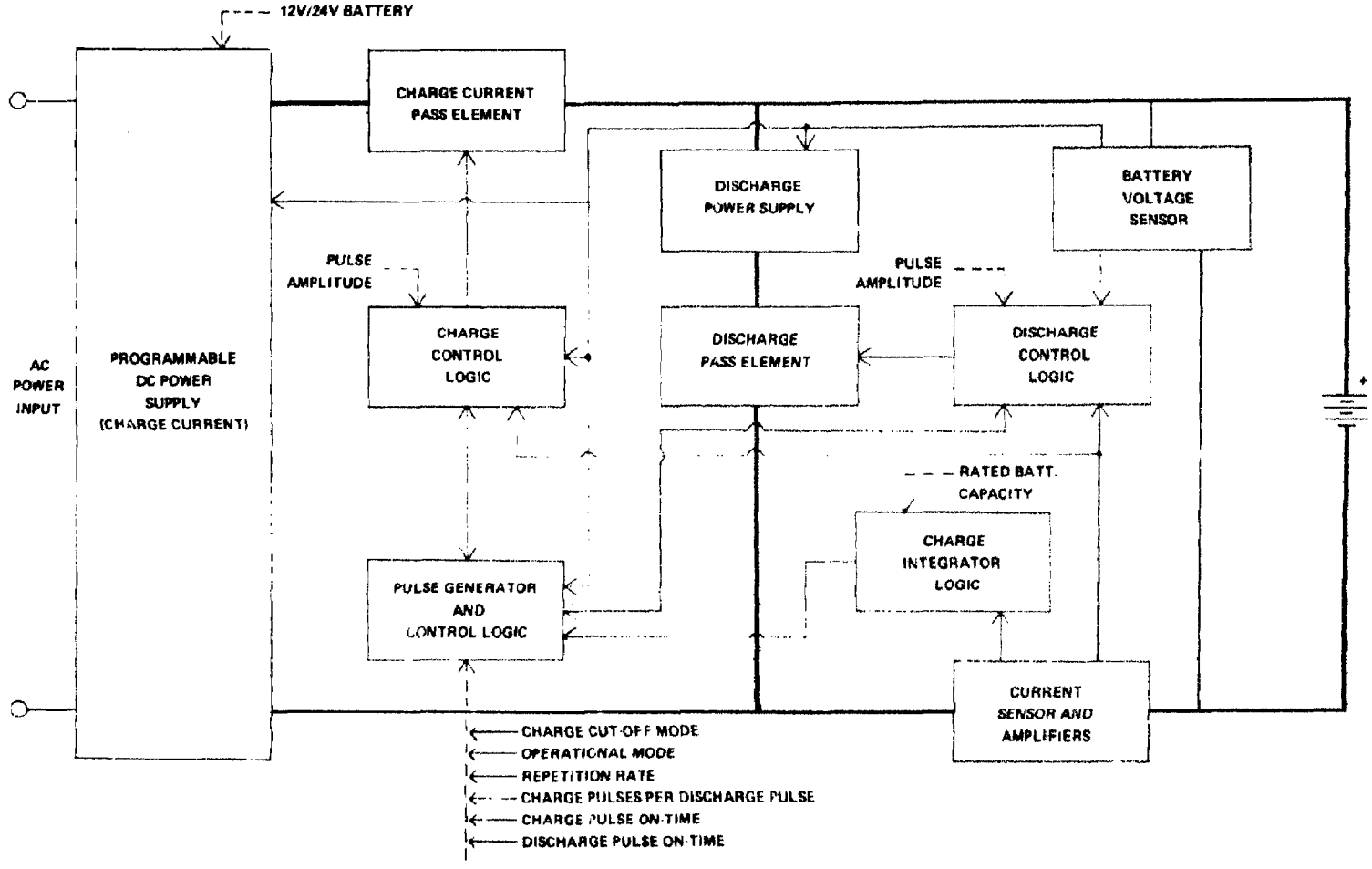

FIGURE III-1. SIMPLIFIED SYSTEM BLOCK DIAGRAM

2. Programmable DC Power Supply

This block consists of an AC to DC converter which has a programmable output voltage. The conversion is accomplished by means of a step-down transformer with a full-wave SCR bridge rectifier on its secondary. Energy from the transformer-rectifier is filtered and stored in a bank of electrolytic capacitors. The output voltage of the converter is controlled (programmed) by varying the conduction angle of the SCRs. The output voltage of this power supply is varied during charge to maintain a fixed voltage across the 'Charge Pass Element'. As the battery voltage rises, the output of the power supply rises by an equal amount. Programming of the voltage is accomplished by sensing the peak battery voltage during a charge pulse, adding a fixed ΔV to this sensed signal and comparing this sum with the output voltage of the power supply. The entire control consists of a closed loop control system, so the power supply output will be dynamic, thus compensating for loading, input line variations, and changes in battery voltage.

The power supply is limited in output voltage for either 12 volt or 24 volt operation; in the 12 volt mode, a maximum output voltage of approximately 24 volts is attainable; in the 24 volt mode, a maximum output voltage of approximately 45 volts is attainable. These limits protect the 'Charge Pass Element' from excess power dissipation if the signal from the 'Battery Voltage Sensor' should fail.

3. Charge Current Pass Element and Charge Control Logic

These two sections of the system control the charge current into the battery. The 'Charge Current Pass Element' consists of transistors which are used as current switches; the 'Charge Control Logic' consists of analog and digital logic which control the amplitude of charging current. The amplitude of charging current (in constant current mode) and charging pulses (in remainder of modes) is controlled by a closed control loop consisting of the two above-mentioned blocks and the 'Current Sensor and Amplifiers'. A voltage proportional to the current is generated in the 'Current Sensor and Amplifiers' block; this voltage is compared to the amplitude adjustment on the front control panel in the 'Charge Control Logic' block. The error signal generated by the comparison is used as the input to an integrator type control circuit which dynamically adjusts its output voltage to maintain sufficient drive current to the 'Charge Pass Element' to hold the desired charging current level. This control loop is digitally controlled in such a way as to 'remember' current amplitudes between charging pulses; the overall time constant of the control loop is long enough to minimize the possibilities of loop instability, but yet short enough to allow necessary corrections of current pulse amplitude within a few pulses.

The selection of type of charge, start of charge, termination of charge, repetition rate of pulses, pulse width, and time placement of pulses are selected by the operator and fed into the 'Pulse Generator and Control Logic' block; this block in turn then sends control signals to the 'Charge Control Logic' to set current pulse time functions. The 'Charge Control Logic' is not capable of delivering any current pulses until commanded to do so by the 'Pulse Generator and Control Logic'.

4. Pulse Generator and Control Logic

This block forms the 'brain' of the timing for the charging system; it controls the mode of charging, pulse formation circuitry, timing controls, operator interface, and charge termination circuitry. The makeup of logic and linear analog logic, both being in the form of integrated circuits. Within this block are contained several smaller blocks; an expanded block diagram of this is contained in Figure III-2. Operation of each block is as follows.

a. Mode Selection Logic – The 'Mode Selection Logic' of Figure III-2 is comprised of digital logic which allows the selection of one operating mode before the 80% charge point and one operating mode after the 80% charge point. The flip-flops used for the selection are interlocked in such a manner that only one mode before and one mode after the 80% charge point can be selected; this ensures that no error in operating mode can be made. In addition to actual selection and decoding of the selected mode, this block contains the logic associated with controlling the transition from the before 80% mode to the after 80% mode. Upon receipt of a control signal from the 'Charge Integrator', the charger is stopped, appropriate mode relays are dropped out and pulled in, and the charger is automatically started again. This sequence is required to prevent 'confusing' of the control logic during mode transition and thus ensure the prevention of a malfunction.

b. Pulse Repetition Rate Generator – This block of Figure III-2 is used in the two charging modes which operate at fixed repetition rates. The hardware which makes up this section consists of two unijunction (UJT) oscillators, one for each fixed repetition rate mode. These oscillators are slightly different than normal UJT oscillators in that: 1) the capacitor is charged from a constant current source, 2) the current from the constant current source can be varied to vary the operating frequency of the oscillator, and 3) the oscillator can be gated 'on' and 'off' by control signals from the 'Mode Selection Control'. By using a constant current source to charge the capacitor, the voltage waveform generated across the capacitor rises linearly to the point where the UJT fires; this linear voltage waveform can then be used to derive pulse widths which are a given percentage of the total period of the oscillator. The use of this will be discussed in Paragraph c. below.

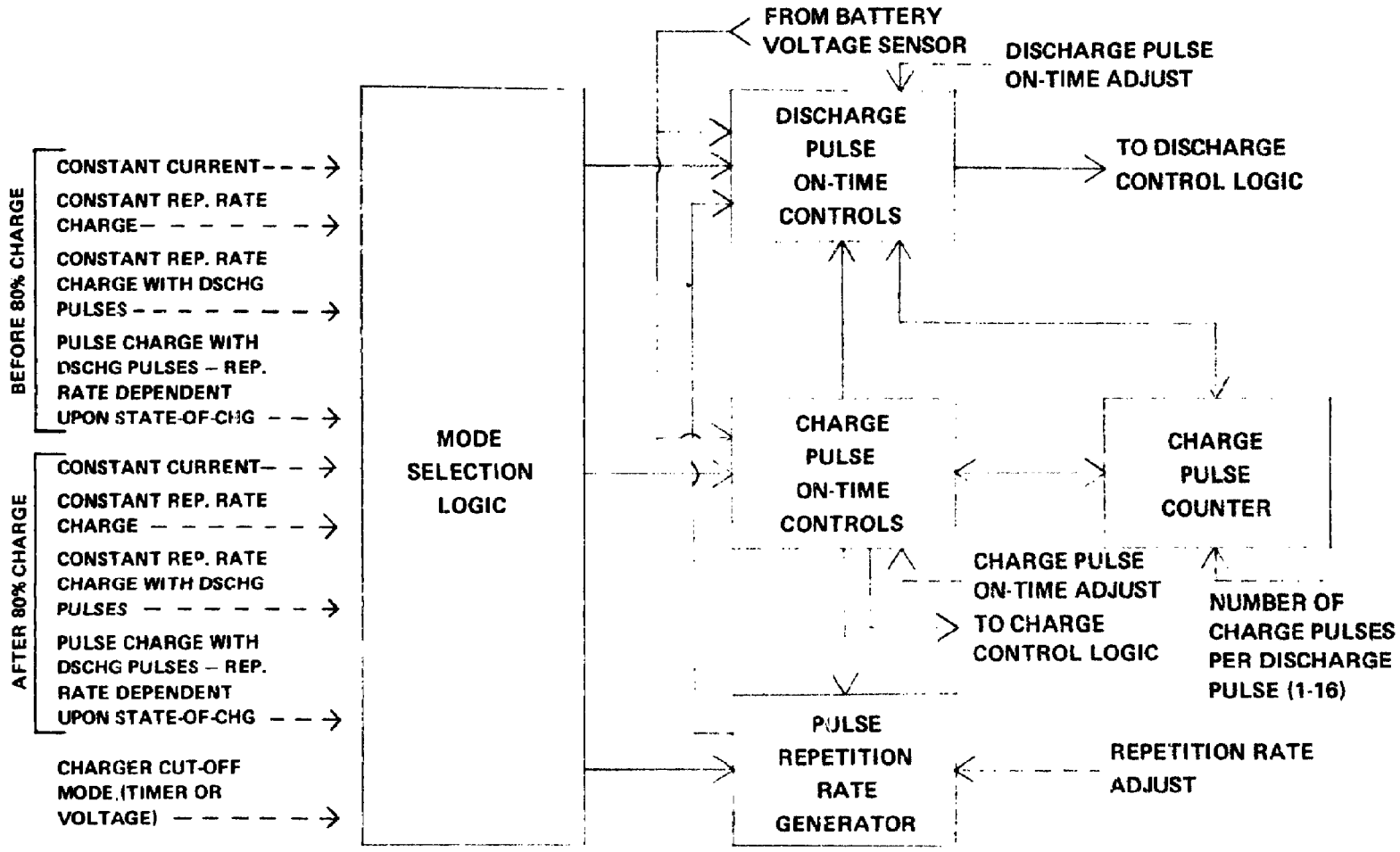

FIGURE III-2. PRELIMINARY PULSE GENERATOR AND CONTROL LOGIC EXPANDED BLOCK DIAGRAM

the battery, a control signal allows the decoding and storing of data from a switch on the charger front panel. This data is stored in the count-down register; then each time a charge pulse is applied to the battery, the register is counted down by one. When the register is zero and a charge pulse has terminated, a discharge pulse is again enabled, starting the sequence over again. When the charger is stopped, a constant decode and store signal is applied to the register to sense any change to the data applied from the front panel; this ensures proper counting the first time through the count-down cycle. During operation in modes other than the one mentioned above, the counter is disabled.

5. Discharge Power Supply

The 'Discharge Power Supply' is a programmable AC to DC converter which is used, when necessary, as a driving source for discharge pulses. When the battery is not capable of providing the desired amplitude discharge pulse, the output voltage of this power supply is increased to a value which will allow the desired amplitude to be attained. The programming is accomplished by sensing the minimum voltage drop across the 'Discharge Pass Element' and holding this voltage at a minimum value. If the voltage across the 'Discharge Pass Element' drops below this minimum value, the output of the power supply is increased; similarly, if the voltage across the 'Discharge Pass Element' increases above the minimum value, the output of the supply is decreased. The entire control of the 'Discharge Power Supply' is dynamic, thus allowing changes in output voltage to compensate for changes in AC line voltage, battery voltage, and battery state-of-charge.

6. Discharge Pass Element and Discharge Control Logic

The 'Discharge Pass Element' is a group of transistors which carry the current contained in the discharge pulses. The transistors are used as switches and are controlled by driving current from the 'Discharge Control Logic'. These two blocks, in conjunction with the 'Current Sensor and Amplifiers' form a closed control loop for regulating the amplitude of discharge pulses. A signal from the 'Current Sensor and Amplifiers', which is proportional to discharge pulse amplitude, is fed into the 'Discharge Control Logic' and then compared with a signal from the discharge pulse amplitude controls on the charger front panel. The error signal which is generated from the comparison above is used as the input signal to an integrator type control; as the error signal changes, the output of the integrator changes to correct the amplitude of the discharge pulses. Since the control loop is closed, it is dynamic and can compensate for changes in driving voltage and battery state-of-charge. To achieve tight amplitude control of discharge pulses, the control loop is digitally controlled, which allows the circuit to 'remember' current amplitudes from one pulse to another. The overall

c. Charge Pulse On-Time Controls and Discharge Pulse On-Time Controls – The controls for the on-times of charge and discharge pulses function basically the same, so they will be discussed as one item.

For operation in the fixed repetition rate modes, the resetting of the capacitor in the UJT oscillators causes an 'enable' signal to be sent to the 'Charge Control Logic' to start a charge pulse. Then, when the linear voltage developed across the capacitor of the UJT oscillator reaches the value set by the charge pulse width controls on the charger front panel, a 'disable' signal is sent to the 'Charge Control Logic' to terminate the charge pulse. If a discharge pulse is to occur at this time, an 'enable' signal is sent to the 'Discharge Control Logic' to start the discharge pulse upon termination of the charge pulse. Then, when the UJT oscillator capacitor voltage reaches a value set by the discharge pulse width control on the front panel, a 'disable' signal is sent to the 'Discharge Control Logic' to terminate the discharge pulse. This cycling is continued throughout operation of the mode of operation. The 'Charge Pulse On-Time Controls' and 'Discharge Pulse On-Time Controls' are interlocked in such a way that a charge pulse and a discharge pulse can never be 'on' at the same time.

In the variable repetition rate modes, the timing is generated in a slightly different fashion. Looking first at the variable repetition rate mode with charge pulses only, a signal is received from the 'Battery Volt Sensor' which enables the charge pulse in the 'Charge Control Logic' and 'starts' a UJT oscillator. The charge pulse is 'on' until the UJT fires and resets the capacitor; at this point, a 'disable' signal is sent to the 'Charge Control Logic' to terminate the charge pulse. At this point, the logic rests and waits for another pulse from the 'Battery Voltage Sensor'.

In the variable repetition rate mode with charge and discharge pulses, the operation described in the above paragraph would be true for the discharge pulses. However, rather than the logic resting after the discharge pulse, a charge pulse is initiated at the same time the discharge pulse is terminated. Also, at the termination of the discharge pulse, a pulse from the 'Discharge Pulse On-Time Controls' starts a UJT oscillator in the 'Charge Pulse On-Time Controls'. At the resetting of this UJT oscillator, the charge pulse is terminated. At this point, the logic rests until a signal from the 'Battery Voltage Sensor' is received to start the whole cycle again.

d. Charge Pulse Counter – This block is basically a binary count-down register which is clocked from a signal derived from the 'Charge Pulse On-Time Controls'. The only mode of operation which uses this counter is the Pulsed Charging with Discharge Pulses at a Fixed Repetition Rate mode. The functioning is as follows: When a discharge pulse is applied to

control loop has a time constant which is long enough to minimize the possibilities of oscillations, but yet, short enough to allow necessary amplitude corrections within a few pulses.

7. Current Sensor and Amplifiers

This block contains a precision shunt which acts as a sampling resistor to give a voltage signal which is proportional to battery current. The signal from this shunt is amplified by operational amplifier circuits to higher values which can be used as control signals. Contained within this section is a current polarity detector circuit; this circuit allows the separation of charge pulse signals and discharge pulse signals. The separated signals are then used in the 'Charge Control Logic' and 'Discharge Control Logic'. Also, the separated signals are necessary for limiting of charge current and discharge current.

Also contained in this section is the averaging amplifier which averages the battery current. This averaging amplifier averages the total signal received from the shunt; the output of this amplifier is then normalized and used as the signal to feed the 'Average Battery Current Output' on the front of the charger.

8. Charge Integrator Logic

This block contains the charge integrator and all the associated limit and logic controls. The charge integrator itself is a classical operational amplifier integrator circuit using a solid electrolyte capacitor to achieve linearity over long charging times. This integrator is fed from a variable gain amplifier whose output is an amplified signal of the current signal received from the 'Current Sensor and Amplifiers'. The gain of this amplifier is variable to allow the charge integrator's ampere-hour rating to be variable to handle various battery capacities.

Also contained in this block is the logic required to sense the 80% charge point. When the output of the integrator reaches a specified value, a signal is sent to the 'Mode Selection Logic' of the 'Pulse Generator and Control Logic' to initiate the transition from the before 80% charge mode to the after 80% charge mode.

Protection circuitry for data and for logic elements has been incorporated into this section. When the integrator output reaches a given value, a STOP signal is initiated to stop the charger; this step is necessary to ensure that erroneous data is not obtained from the integrator, by exceeding the linear region of the solid electrolyte capacitor being used, should the operator fail to clear out the integrator before starting a test.

9. Battery Voltage Sensor

This section consists basically of four parts: 1) a peak battery voltage detector, 2) a minimum battery voltage detector, 3) an open-circuit battery voltage detector, and 4) an average battery voltage detector. Each of these parts serves a specific function and operates as follows.

a. Peak Battery Voltage Detector – This circuitry samples the battery voltage continuously and holds the peak value seen over a given time period (milliseconds). This peak voltage is attenuated and summed with a preset voltage level; the sum of these signals is then used as an input to the programming section of the 'Programmable DC Power Supply' to adjust the power supply output voltage as described in Paragraph 2).

b. Minimum Battery Voltage Detector – This circuitry samples the battery voltage continuously and holds the minimum value seen over a given time period (tens of milliseconds). This voltage signal is then applied to the programming section of the 'Discharge Power Supply' to adjust the supply output voltage, as discussed in Paragraph 5, above.

c. Open-Circuit Battery Voltage Detector – The circuitry involved here is the source of control signals for enabling charge or discharge pulses in the variable repetition rate mode. Basically, this circuitry samples battery voltage when no current is flowing in the battery. When the sampled voltage is equal to or less than the trigger voltage set by the operator, a signal is sent to the 'Pulse Generator and Control Logic', as described in Paragraph 4, above.

d. Average Battery Voltage Detector – This section continuously monitors the battery voltage and averages the voltage using an operational amplifier type averaging circuit. This averaged voltage is used for the 'Normalized Average Battery Voltage Output' on the front panel of the charger. Also, the average battery voltage is compared with the setting of charge termination voltage; when the average battery voltage is equal to or greater than the desired termination voltage, a STOP signal is generated and stops the charger.

IV. CHARGER SYSTEM DESCRIPTION

A. System Configuration

This charging system, which has been denoted as Model PBC-001 by Gould Inc., is comprised of two modules – a Power Module and a Control Module. The Control Module, whose front panel contains push-button switches, rotary switches, dial indicators, and meters, performs the function of controlling the timing of charge and discharge pulses and contains all other controls necessary for selecting the desired charge regime. The Power Module, whose front panel houses a circuit breaker, a POWER ON indicator, and a DC power output connector, contains all the power handling electronics necessary for charging a battery. This module contains two AC-DC power supplies, one for charging and one for forced discharging, and the pass transistors which are associated with the charge and discharge power circuits. In addition to the power handling electronics, the Power Module contains the feedback control logic which is associated with the charge and discharge current control loops.

The Power Module and Control Module are interconnected via three cables; these three cables transfer AC power from the Power Module to the Control Module, DC logic power from the Control Module to the Power Module, and logic signals between the two modules. These three cables are permanently attached to the Control Module and connect to the Power Module via cable connectors. In addition to these three cables, there is one other cable associated with this charging system; this cable is the interface between the primary power source and the Power Module. This power cable is permanently attached to the Power Module.

Thus, this charging system is comprised of two modules – one for control and one for power handling. The two modules are interdependent and must be operated in conjunction with one another to ensure proper system operation.

B. System Characteristics

1. Input Power Requirements

The charging system is designed to operate from either a 115 VAC or a 230 VAC, 60 Hz source. The system is presently connected for 230 VAC operation. If 115 VAC operation is desired, the manufacturer should be contacted for detailed instructions on system reconnection. Under the present configuration, the input power requirements are as listed below.

- Input Voltage: 230 VAC (four-wire configuration)
- Input Frequency: 60 Hz
- Input Current: 30 Amps (rms)

2. *Output Characteristics*

This charger has five basic modes of operation. These modes are listed and described below.

a) Constant Current -- In this operating mode, the charging current which is supplied to the battery is in the form of a constant DC current. The constant current level is adjustable from the front panel of the Control Module over the range of 1 amp to 35 amps.

b) Pulsed Charging At A Fixed Repetition Period – In this mode, the charging current which is applied to the battery is in the form of pulses. The charging pulses are adjustable in amplitude, repetition rate, and pulse width. The pulse amplitude is adjustable from 1 amp to 50 amps. The repetition rate is adjustable from 60 pps to 10K pps, and the pulse width is adjustable from 10 percent to 90 percent of the pulse repetition period.

c) Pulsed Charging With Discharge Pulses At A Fixed Repetition Rate – This mode is similar to the operating mode discussed in *b)* above except for the addition of discharge pulses. These discharge pulses occur between the end of one charging pulse and the beginning of the next charging pulse and are adjustable in amplitude, pulse width, and repetition rate. The range of amplitude, of pulse repetition rate, and pulse width of the charging pulses is identical to that of the mode discussed in *b)* above. The amplitude of the discharge pulses is adjustable from 1 amp to 100 amps; the pulse width of the discharge pulses is adjustable from 1 percent to 50 percent of the repetition period of the charging pulses; and the repetition rate of the discharge pulses is adjustable from one discharge pulse per charge pulse to one discharge pulse per 15 charge pulses.

d) Pulsed Charging At A Variable Repetition Rate – In this mode, the charging current is provided to the battery in the form of pulses. These pulses occur at a repetition rate which is dependent upon the rate of decay of the battery voltage following a charge pulse. The charging pulses are adjustable in amplitude and pulse width. The amplitude is adjustable from 1 amp to 50 amps, and the pulse width is adjustable from 100 microseconds to 100 milliseconds. In addition to these adjustments, an adjustment of the battery voltage trigger point is available. The logic of this mode is configured in such a way that when the battery voltage decays below the voltage trigger point, a charge pulse is initiated. After the prescribed pulse width, the charge current drops to zero and the battery voltage begins to decay, starting a new cycle. With the voltage trigger point properly adjusted, a discharged battery would call for charging pulses at a high repetition rate; then, as the battery state-of-charge increased, the repetition rate would decrease.

e) Pulsed Charging With Discharge Pulses At A Variable Repetition Rate – This mode of operation is identical to that described in *d)* above except that this mode has a discharge pulse just prior to a charging pulse. When the battery voltage decays below the voltage trigger point, which was described in *d)* above, a discharge pulse of a given amplitude and pulse width is initiated. Following this discharge pulse, a charging pulse of a given pulse amplitude and pulse width is initiated. Once the charging pulse is completed, the battery voltage begins to decay and a new cycle is initiated. The amplitude and pulse width of the charging pulses are adjustable over the range described in *d)* above; the amplitude of the discharge pulse is adjustable from 1 amp to 100 amps, and the pulse width of the discharge pulse is adjustable from 1 microsecond to 10 milliseconds.

These five basic modes comprise the operation of this charging system. In addition to these basic modes, it is possible to operate in one mode before the 80 percent charge point of the battery, and then switch, automatically, to a different mode for operation after the 80 percent charge point. By using this configuration of two different operating modes, it is possible to rapid charge a battery while its charge acceptance is high and then decrease the charging rate once the battery approaches full charge.

C. Control Module – Detail Description

1. Front Panel Controls

The controls on the front panel of the Control Module are used to adjust the charger for the particular charge regime being used for a test. The function of each of these controls will be discussed in this section. Figure IV-1 shows a picture of the front panel of the Control Module with each control identified by a letter and number or a series of letters and a number. The following description will cover each control and explain its purpose and calibration for use on the charger.

BV – Battery Voltage Select

This rotary switch selects operation of the charger in either 12 volt or a 24 volt mode. If a 12 volt battery is being charged, this control should be in the 12 volt position; similarily, if a 24 volt battery is being charged, the switch should be in a 24 volt position. With the control in the 12 volt mode, only a 12 volt battery can be charged; however, if the control is in the 24 volt mode, either a 12 volt or a 24 volt battery can be charged with no damage to the charger.

BC – Battery Capacity Adjust

This control should be adjusted for the rated capacity of the battery being charged. The range covered by this control is 1.00 ampere-hours to 10.00 ampere-hours. Thus, if a 4.0 ampere-hour battery is to be charged, this control should be adjusted to read

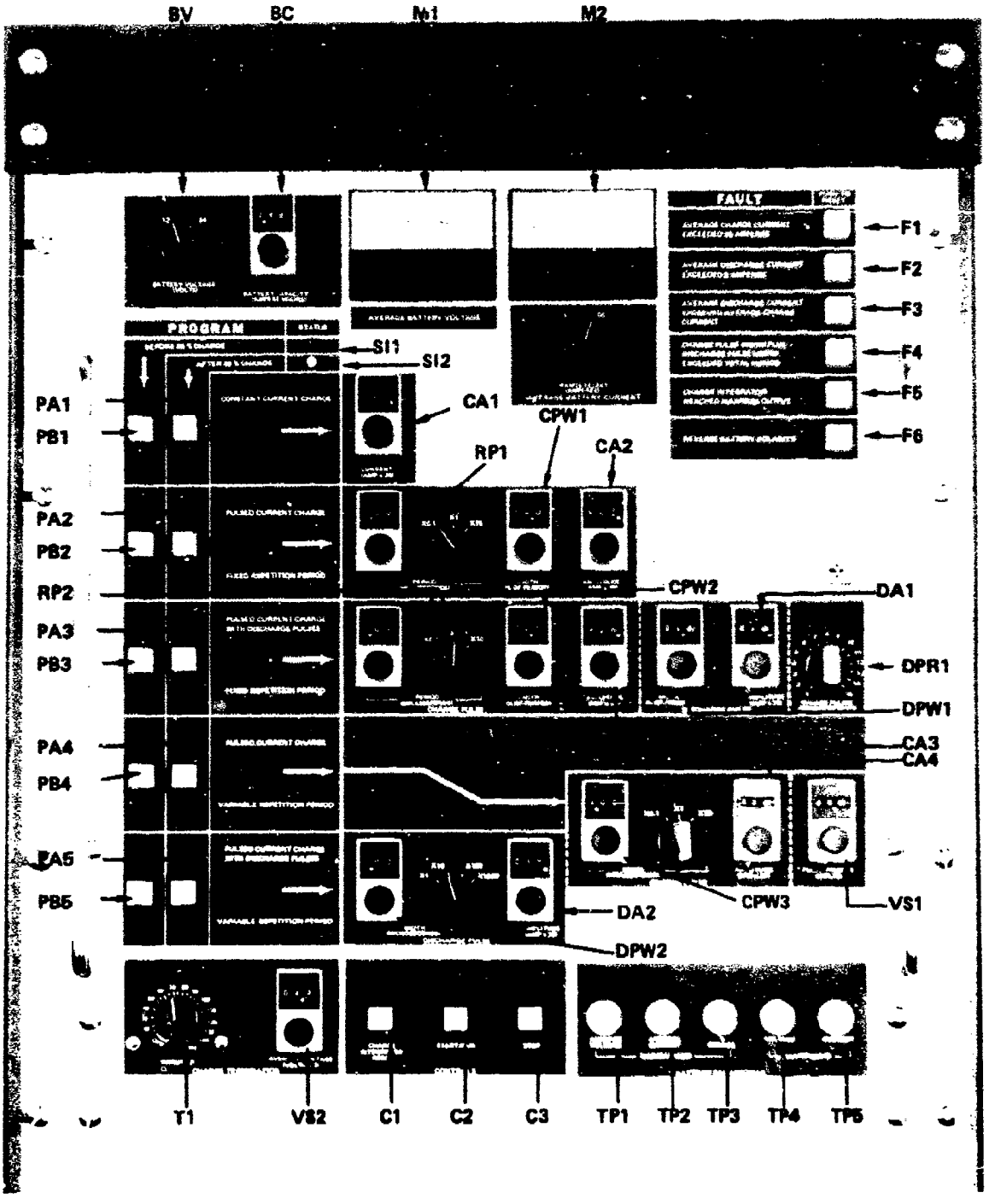

FIGURE IV-1. CONTROL MODULE – FRONT PANEL

4.00 on the three digits displayed on the front of the control. The setting of this control is used as the basis for the 80 percent charge point transition; thus, with the adjustment of 4.00 ampere-hours, the transition from one mode of operation to a different mode of operation would occur after 3.20 ampere-hours of capacity have been returned to the battery.

PB1–PB5 – Before 80 Percent Charge Program Select

These push-button switches select the mode of operation of the charger before the 80 percent charge point is reached. PB1 selects the constant current charge mode, PB2 selects the post current charge at a fixed repetition rate, PB3 selects pulsed charge current with discharge pulses at a fixed repetition rate, PB4 selects pulsed charge current at a variable repetition rate, and PB5 selects pulsed charge current with discharge pulses at a variable repetition rate. Of these push-button switches, only one mode can be selected at a time. The mode selected will be indicated by a lighted push-button switch (green in color).

PA1–PA5 – After 80 Percent Charge Mode Selector

These push-button switches are identical in function to those discussed above; however, they select the operating mode after the 80 percent charge point has been reached, and when lighted glow yellow.

SI1 – Before 80 Percent Charge Status Indicator

This green indicator light, when lighted, indicates that the battery has not reached the 80 percent charge point and that the charger is operating in the mode selected for before 80 percent operation.

SI2 – After 80 Percent Charge Status Indicator

This yellow indicator, when lighted, indicates that the battery has reached the 80 percent capacity point and that the charger is operating in the mode selected for operation after 80 percent charge.

CA1 – Constant Current Mode Charge Current Adjust

This control adjusts the constant current level which is to be used in this charge mode. The current amplitude range covered by this control is 1.0 ampere through 35.0 amperes. The numbers on the front of the control range from 20 through 1000; the usable range for this control is 20 through 700. Thus, the numbers which are indicated on the front of the control are equal to the charging current level times twenty. If a current level of 20 amperes were desired for charge current, this control should be adjusted to read 400. If this control is adjusted above the 700 point (35 amperes) a fault indicator light (F1) will turn on and the charger will stop.

CA2–CA4 – Charging Pulse Amplitude Controls

These three controls are used to adjust the amplitude of the charging pulses which are to be applied to the battery. The range covered by each control is 1 ampere through 50 amperes. The numbers which are indicated on the front of each control range from 20 through 1000; these numbers are equivalent to 1 ampere through 50 amperes. Thus, if a charge amplitude of 20 amperes was desired, these controls should be adjusted to read 400. Since it is possible to achieve a 50 amp charging pulse, each of these controls is usable over its entire range. CA2 adjusts the charging pulse in the pulse charge current at fixed repetition rate mode, CA3 adjusts the charging pulse amplitude for the pulsed charge current with discharge pulses at a fixed repetition rate mode, and CA4 adjusts the charging pulse amplitude for both variable repetition rate modes.

DA1 & DA2 – Discharge Pulse Amplitude Control

These controls adjust the amplitude of the discharge pulses which will be applied to the battery. The range covered by these controls is 1 ampere through 100 amperes. The numbers which appear on the front of the dials range from 10 through 1000 and correspond to 1 amp through 100 amps, respectively. Thus, a scale factor of 10 is used on this control. If a discharge pulse amplitude of 20 amperes is desired, the controls should be adjusted to 200. Since it is possible to have a discharge pulse amplitude of 100 amps, the entire range of 10 through 1000 on this control is usable. DA1 adjusts the amplitude of the discharge pulses for the pulse charge current with discharge pulses at a fixed repetition rate mode, and DA2 adjusts the amplitude of the discharge pulses for the pulse charge current with discharge pulses at a variable repetition rate mode.

RP1 & RP2 – Repetition Period Adjustments

These controls adjust the repetition period for the two modes of operation which have a fixed repetition rate. Each control consists of a continuous adjustment from 1.00 through 10.00 and a three-position multiplier. With the multiplier and the continuous adjust, it is possible to achieve a repetition period which ranges from 0.1 milliseconds (100 microseconds) to 100 milliseconds. If a repetition period of 2.50 milliseconds is desired, the continuous adjust should be adjusted to read 2.50 and the multiplier switch should be in the X1 position; similarily, if a repetition period of 750 microseconds is desired, the continuous adjust should be adjusted to 7.50 and the multiplier switch should be in the X0.1 position. These controls are usable over their entire range in all three multiplier positions. RP1 adjusts the period for the pulsed charge current with discharge pulses at a fixed repetition rate mode.

CPW1 & CPW2 – Charge Pulse Width Controls

These controls adjust the width of the charging pulses in the fixed repetition rate modes. The adjustment of these controls is based upon a percentage of the repetition period. The range covered by the controls is 10 percent through 90 percent of the repetition period. The numbers which are indicated on the front of the controls are direct readings of the percentage of the repetition period which has been selected; thus, if the control is adjusted to read 25.0, then the pulse width of the charging pulse is equal to 25 percent of the repetition period for that mode of operation. Since the adjustment range to be covered is 10 percent through 90 percent of the repetition period, the entire range of adjustment for the control cannot be used. Caution should be taken to ensure that these controls do not get adjusted beyond a setting of 90.0. CPW1 adjusts the charge pulse width for the pulsed charge current at a fixed repetition rate mode and CPW2 adjusts the charge pulse width for the pulsed charge current with discharge pulses at a fixed repetition rate mode.

DPW1 – Discharge Pulse Width Control

This control adjusts the discharge pulse width in the pulse charge current with discharge pulses at a fixed repetition rate mode. The range covered by this control is 1 percent through 50 percent of the charge pulse repetition period. The percentage of the charge pulse repetition period is read directly from the numbers on the front of the control. As can be seen by examining the control, it is possible to adjust this control from 1 percent through 100 percent of the charge pulse repetition period. If this control is adjusted beyond the 50 percent point, no damage will occur to the charger.

DPR1 – j Control

This 15-position rotary switch selects the number of charge pulses which occur between discharge pulses. If the operator desires to have a discharge pulse following each charge pulse, he would adjust the rotary switch to position 1; similarily, if he desires 15 charging pulses between discharge pulses, he would adjust the rotary switch to position 15.

CPW3 –

This control adjusts the width of the charging pulse which would occur in either of the variable repetition rate modes. It consists of a continuous adjust from 1.00 through 10.00 and a three-position multiplier. The combination of the continuous adjust and the multiplier allow a range of charge pulse width from 0.1 milliseconds (100 microseconds) through 100 milliseconds. Thus, if a charge pulse width of 750 microseconds is desired, the continuous adjust would be adjusted to 7.50 and the multiplier switch would be placed in the X0.1 position; similarily, if a charge pulse width of 15 milliseconds is desired, the continuous adjust should be placed in the 1.50 position and the multiplier switch should be placed in the X10 position.

DPW2 – Discharge Pulse Width Control

This control is used to adjust the width of the discharge pulse which would be applied to the battery in the pulse charge current with discharge pulses at a variable repetition rate mode. The control consists of a continuous adjust from 1.00 to 10.00 and a four-position multiplier. Since the discharge pulses are normally narrow pulses, the time calibration for this scale is microseconds as opposed to milliseconds which was used on all other time base controls. The range which is covered by this control is one microsecond through 10,000 microseconds (10 milliseconds). This control is usable over its entire range. If the operator desires a discharge pulse width of 7.5 microseconds, he would adjust the continuous adjust to 7.50 and the multiplier to the X1 position; similarily, if he desires a discharge pulse width of 500 microseconds, the continuous adjust should be placed at 5.00 and the multiplier switch in the X100 position.

VS1 – Voltage Threshold Control

This control sets the threshold level for the initiation of either a charge or a discharge pulse in either of the variable repetition rate modes. The range covered by this control is 0 volts through 100 volts, with the voltage setting read directly from the numbers on the face of the control.

F1–F6 – Fault Indicators

The six push-button switches in the upper right-hand corner of the front panel of the Control Module are lighted push-button switches. When lit, they indicate that a fault condition exists in the charger. The source of the faults will in most cases be a maladjustment of the controls on the front panel; however, if a system malfunction should occur, it will in most cases, be detected by the fault logic and displayed on one of the fault indicator lights. Whenever a fault occurs and a fault indicator light is lit, the charger will automatically go into the STOP mode. To return the system to operation, the cause of the fault must be corrected, the lighted push-button switch must be depressed (causing the switch to return to a white color), and the START/RUN push-button must be depressed. The meaning of each fault indicator is as follows.

F1 – This fault indicator indicates that the average current being delivered from the charge power supply is in excess of 35 amperes; thus, this indicator could be lighted if a charging pulse of 50 amperes and a pulse width in excess of 70 percent of the repetition period were used. This indicator will not be actuated until the charger is placed into the START/RUN mode; thus, there will be no indication of a maladjustment on the front panel prior to starting the charge. Also, since the averaging circuit utilizes a long time constant analog integrator, the system could operate for several seconds prior to the indication of a fault if the average charging current is just slightly in excess of the 35 amperes.

F2 – This fault indicator indicates that the average discharge current being taken out of the battery is in excess of 5 amperes; also, this indicator will indicate that a total charge of 62,000 micro coulombs were contained in the discharge pulse. This latter limit is being placed on the discharge pulse in order to prevent excessive localized heating in the discharge pass elements when a large amplitude discharge pulse is applied to the battery. The sensing circuitry used for this fault indicator is a short time constant analog integrator; therefore, if a maladjustment has been made on the front panel controls, the fault indicator will light within milliseconds after the system has been started.

F3 – This fault indicator indicates that the average discharge current being taken from the battery is in excess of the charge current being delivered to the battery, thus resulting in a net discharge of the battery. This condition could be met if several controls on the front panel are adjusted improperly. The indication of this maladjustment will occur within milliseconds after the START/RUN push-button has been depressed.

F4 – The purpose of this fault indicator is to indicate to the operator that a maladjustment of the pulse width controls of the pulse charge current with discharge pulses at a fixed repetition rate mode has been made. This light will light when control CPW2 and control DPW1 have been adjusted in such a way that the sum of the two controls is greater than 100 percent. This fault indicator will light only when the system is operating in the mode mentioned previously. During the use of other modes, this fault is disabled.

F5 – This indicator light deals with a fault which is connected with the charge integrator which is used for determining the 80 percent charge point. If the operator fails to depress the charge integrator RESET push-button prior to starting a test, the charge integrator could integrate beyond its upper limit, causing the generation of erroneous capacity data. Whenever the charge integrator reaches its upper limit, a sensing circuit stops the charger and lights the fault indicator light. The system cannot be restarted until the Charge Integrator Reset (C1) has been depressed and returns to a lighted condition and the fault indicator push-button has been depressed, clearing the fault.

F6 – This fault deals with the connection of a battery to the charger; if the battery is connected improperly or no battery is connected to the system, and the START/RUN push-button is depressed, this fault indicator will light. A delay of approximately 500 milliseconds occurs between the depression of the START/RUN push button and the lighting of this fault indicator. This delay gives the sensing circuitry sufficient time to detect the error. When this fault occurs, the main contactor, which connects the charger to the battery, cannot close.

P1 – Timer Control

This control adjusts time on the over-ride timer which is built into the system. On the dial for the timer is the calibration OFF through 150 minutes. The timer can be adjusted to any setting between 15 minutes and 150 minutes. For settings less than 15 minutes the timer will hold the charger in the STOP mode. The function of the timer in the system is to stop the charger after a specified length of time if the average battery voltage has not reached the level adjusted on VS2. The timer, when timed out, closes a set of contacts and places the charger in the STOP mode. Any time the charger is stopped, the timer is reset to the time adjusted on the front panel control. The timer which has been used in this system is not a clock; that is, the knob on the front panel does not move to indicate the amount of remaining time.

VS2 – Termination Voltage Control

This control is the adjustment which is used to set the average battery voltage which is to be used for terminating the charge. This control works in parallel with timer T1; that is, if the average battery voltage reaches the value adjusted on the control before the timer times out, the voltage sensor will stop the charger. The numerical range of adjustment of this control is 0.0 through 100.0; these numerical values correspond to voltage settings of 0.0 through 50.0 volts. Thus, the numerical value adjusted on the control should be equal to twice the voltage value desired for terminating the charge. If a cut-off voltage of 15.5 volts is desired, the control should be adjusted to a numerical value of 31.0. Since the average on charge voltage of batteries is generally assumed to be a function of battery temperature and battery manufacturer, care should be taken in adjusting this control properly to ensure that the setting is not too high for the battery being charged.

C1 – Charge Integrator Reset Push-Button

This control is a lighted push-button switch which is used to clear the charge integrator. This control should be used any time the charge integrator is to be reset. This control is usable only when the charger is in the STOP mode. When the charger is running, the charge integrator reset push-button is locked out – this eliminates the possibility of someone accidentally clearing the integrator during a charge. To operate this control when the unit is in the STOP mode, the push-button switch should be depressed and released. This initiates the logic for clearing the charge integrator; when the charge integrator is reset, the Charge Integrator Reset Push-Button will light (white in color) indicating that the charge integrator is reset and the system is ready for operation. While the charge integrator is resetting, the charging system cannot be started; this ensures that the charge integrator will be completely rest before a new charge can be started. The light on the charge integrator reset push-button will turn off when the system has been started for the first time after the charger integrator has been reset.

C2 – START/RUN Push-Button

This control places the charging system in an operating mode. To operate, the push-button should be depressed and released. While the charger is in operation, this push-button will be lighted (green in color). If the push-button does not light, the charging system has not started and the operator should check to make sure he has adjusted all controls properly. This control is a momentary switch and should never be held in. By holding the push-button in, damage could be caused to the overall charging system.

C3 – STOP Push-Button

This control is used to manually stop the charging system and to indicate that the charger is in the STOP mode. While the charger is stopped, the push-button switch will be lighted (yellow in color). This light will indicate to the operator that the charging system has stopped – whether the charger was stopped manually by the operator or automatically by the electronics associated with the charger system. In addition to stopping the charging system, this push-button switch also resets the timer T1; therefore, this switch should not be depressed during a charge unless that charge is to be aborted.

TP1–TP3 – Normalized Battery Parameter Test Points

These three test points indicate the normalized average battery voltage, average battery current, and percent of charge of the battery. TP1 indicates the normalized average battery voltage. This output is normalized to +1 volt at 50 volts. TP2 indicates the normalized average battery current. This test point is normalized to + 1 volt. The normalizing factor for TP2 is controlled by the selector switch on ammeter M2; with the selector switch for the ammeter in the 5 amp position, 1 volt on TP2 corresponds to 5 amps of average battery current. Similarily, with the selector switch in the 50 amp position, 1 volt at TP2 corresponds to 50 amps of average battery current. TP3 indicates the percent of charge of battery. This output is normalized to +1 volt at approximately 125 percent of the setting on control BC. A voltage of 0.80 volts on TP3 is equivalent to 100 percent of the setting on control BC; also, a voltage of 0.64 volts on TP2 is equivalent to the 80 percent transition point. These three test points are BNC type connectors which utilize a common ground; this ground is the negative terminal of the battery under charge.

TP4 & TP5 – Battery Waveform Outputs

These two outputs show the waveforms of the battery voltage and the battery current. TP4 indicates the waveform of the battery voltage. The waveform which appears at this point is taken between the + Battery Sense line and ground for the system. TP5

is the waveform of the battery current. This waveform is taken directly across the shunt, which is used as a control element in the charger. The calibration on TP5 is 50 millivolts equals 25 amps. A negative voltage on TP5 represents a charge current, and a positive voltage on TP5 represents discharge current. Thus, a charge pulse of 25 amps would appear at TP5 as a -50 millivolts; similarily, a discharge pulse of 100 amps would appear at TP5 as +200 millivolts. These test points are merely monitoring points, they should not be used for system calibration.

M1 – Average Battery Voltage Indicator

This meter indicates the average battery voltage. Full-scale deflection of the meter is equivalent to 50 volts DC. This meter is intended to be only an indicator of approximate battery voltage. The accuracy of this meter is approximately 5 percent.

M2 – Average Battery Current Indicator

This meter indicates the average battery current in two ranges, 0-5 amps and 0-50 amps. Associated with the meter movement is a selector switch which is used to select the full-scale deflection of the meter. When the switch is in the 5 amp position, full-scale deflection on the meter is 5 amps; similarily, when the selector switch is in the 50 amp position, full-scale deflection is equal to 50 amps. As mentioned previously under TP2, this selector switch also controls the scaling factor on TP2. The useful range of the meter is 0 through 4 amps when the switch is in the 5 amp position and 0 through 40 amps when the switch is in the 50 amp position.

D. Power Module Front Panel Description

The front panel of the Power Module contains the primary AC power switch/circuit breaker, a POWER ON indicator, and the DC OUTPUT connector. The switch/circuit breaker is used to apply primary AC power to the Power Module; also, this device provides over-current protection for the Power Module. The circuit breaker used is a 50 amp three-pole breaker. The POWER ON indicator is a light which glows green when AC power is applied to the circuitry in the Power Module. The DC OUTPUT connector is used to connect the battery to the charger via a cable. This connector contains seven pins; two pins are used for cables to the positive battery terminal, two pins are used for the cable to the negative battery terminal, one pin is used for the positive battery sense line, one pin is used for the negative battery sense line, and one pin is unused.

In operation, a cable is connected to the DC OUTPUT connector and the AC power switch/circuit breaker is moved to the ON position. This applies AC power to the Power Module and readies the system for operation.

V. OPERATING INSTRUCTION

A. Charger Operation

The operation of the charging system is best described by going through a sample set-up which defines a specific charge set-up to be used and then describes the adjustment of the controls on the front panel of the Control Module.

SAMPLE CHARGE

- 12 volt (10 cell) sealed nickel-cadmium battery
- 4.0 ampere-hour battery
- Pulse charge at a fixed repetition rate before 80 percent capacity with a charging period of 2.5 milliseconds, a charge pulse width of 70 percent, and a charge pulse amplitude of 30 amperes
- Pulse charge with discharge pulses at a variable repetition rate after 80 percent capacity with a discharge pulse width of 45 microseconds, a discharge pulse amplitude of 25 amps, a charge pulse width of 250 microseconds, a charge pulse amplitude of 25 amps, and a trigger voltage of 15.5 volts
- A total charge time of 20 minutes
- A termination voltage of 15.8 volts

With this defined charge regime the steps for operating and adjusting the charger are as follows.

Step 1 Connect the DC power cable between the battery and the DC OUTPUT connector on the Power Module.

Step 2 Connect the primary AC power cord to the primary AC power source.

Step 3 Move the AC power switch/circuit breaker to the ON position. At this point, some of the indicators and lighted push-button switches on the Control Module should be lighted indicating that the system is in functional order.

Step 4 Place the battery voltage switch BV in the 12-volt position.

Step 5 Rotate the battery capacity control BC until it reads 4.00.

Step 6 Depress and release push-button PB2. This selects the pulsed charge current at a fixed repetition rate mode before 80 percent charge.

Step 7 Rotate the dial indicator associated with RP1 to read 2.50, and rotate the multiplier switch associated with RP1 to the X1 position. This selects a charging period of 2.50 milliseconds.

Step 8 Rotate dial indicator CPW1 to read 70.0. This selects a pulse width of 70 percent.

Step 9 Rotate dial indicator CA2 to read 600. This selects a charge pulse amplitude of 30 amperes.

Step 10 Depress and release push-button PA5. This selects the pulse charge current with discharge pulses at a variable repetition rate mode after 80 percent charge.

Step 11 Rotate the dial indicator associated with DPW2 to read 4.50 and rotate the multiplier switch associated with DPW2 to the X10 position. This selects a discharge pulse width of 45 microseconds.

Step 12 Rotate dial indicator DA2 to read 250. This selects a discharge pulse amplitude of 25 amperes.

Step 13 Rotate the dial indicator associated with CPW3 to read 2.50 and rotate the multiplier switch associated with CPW3 to the X0.1 position. This selects a charge pulse width of 250 microseconds.

Step 14 Rotate CA4 to read 500. This selects a charge pulse amplitude of 25 amperes.

Step 15 Rotate VS1 to read 15.5. This selects a trigger voltage of 15.5 volts.

Step 16 Rotate the control knob T1 to the 20-minute position.

Step 17 Rotate VS2 to read 31.6. This selects an average battery voltage cut-off of 15.8 volts.

Step 18 Rotate the selector switch associated with M2 to the 50 amp position.

Step 19 Depress and release push-button C1. This initiates the clearing of the charge integrator.

Step 20 Depress and release any of the fault indicator push-button switches which are glowing red. These indicators may turn on during the power-up sequence due to transients on the power line and must be cleared prior to system operation.

Step 21 When the charge integrator push-button C1 is lighted (white) and all previous steps have been completed, depress and release the START/RUN push-button C2. This places the charger in operation and charge current is being delivered to the battery.

With the charger in operation, the yellow push-button switch associated with the pulsed charge current at a fixed repetition period mode light should be glowing, the green light associated with the pulsed charge current with discharge pulses at a variable repetition mode should be lighted, the START/RUN push-button should be lighted green, the average battery voltage indication on M1 should indicate the battery voltage, the average battery current meter M2 should be reading current of approximately 30 amperes, the green status light, indicating before 80 percent operation should be lighted for approximately the first 12 minutes of charge, and the yellow status light associated with the after 80 percent charge condition should be lighted for the remainder of the charge. The charge should be terminated for this particular charge via the timer which will time out after 20 minutes. When the timer has timed out, the START/RUN push-button switch should return to a white color and the STOP

push-button switch should glow yellow; this indicates that the charger has stopped. The status light for the after 80 percent charge will remain lighted along with the push-button switches which were chosen for the charge regime. Prior to the next charge, the charge integrator should be reset and any adjustments to the charge regime should be made. Care must be taken to ensure that the charge integrator is reset prior to each charge. If this is not followed, the charge integrator will yield erroneous data and if it reaches its maximum output will cause the charge to terminate and thus destroy any data which was being accumulated during the charge.

Once the charger has been connected to the AC power source and a battery for test has been connected to the charger, steps 1, 2, and 3 of the above operation can be omitted. However, whenever the battery under test is being changed, it is advisable to return the AC power switch/circuit breaker to the OFF position prior to disconnecting and reconnecting the battery.

The charger is designed for operation with test instrumentation which is isolated from AC ground. If it is necessary to connect a piece of grounded test equipment to the BNC connectors on the front of the Control Module, the following steps must be taken.

Step 1 Remove ground connection between AC ground and system ground. This connection is made in the Control Module and consists of a violet jumperbetween the middle terminal of the AC terminal block (which the Control Module AC power cable is connected) and the larger power supply board on the underside of the Control Module chassis.

Step 2 Remove the signal diode (FD100) in series with the 180Ω resistor on the PC card number 4100-28 located in position P4 in the Power Module. This diode is located adjacent to the 180Ω resistor and between the 2N5679 and 2N5681 transistors.

Step 3 Replace the diode, removed in Step 2, above, with a short jumper.

Once these changes have been made, it is important that a piece of grounded equipment always be connected to one of the BNC connectors on the front panel of the Control Module.

B. Installation Instructions

1. Installation Instructions

The installation of this charger system is relatively simple and requires only a couple of notes. The Power Module and the Control Module can be mounted in any configuration with respect to one another; that is, the two modules can sit side by side or one module on top of the other in a rack. The cables which connect the Control Module to the Power Module are sufficiently long to allow any orientation. After orienting the two modules as desired, the following steps should be taken. (All references, in the following steps, to cables and connectors are shown on Figure V-1.)

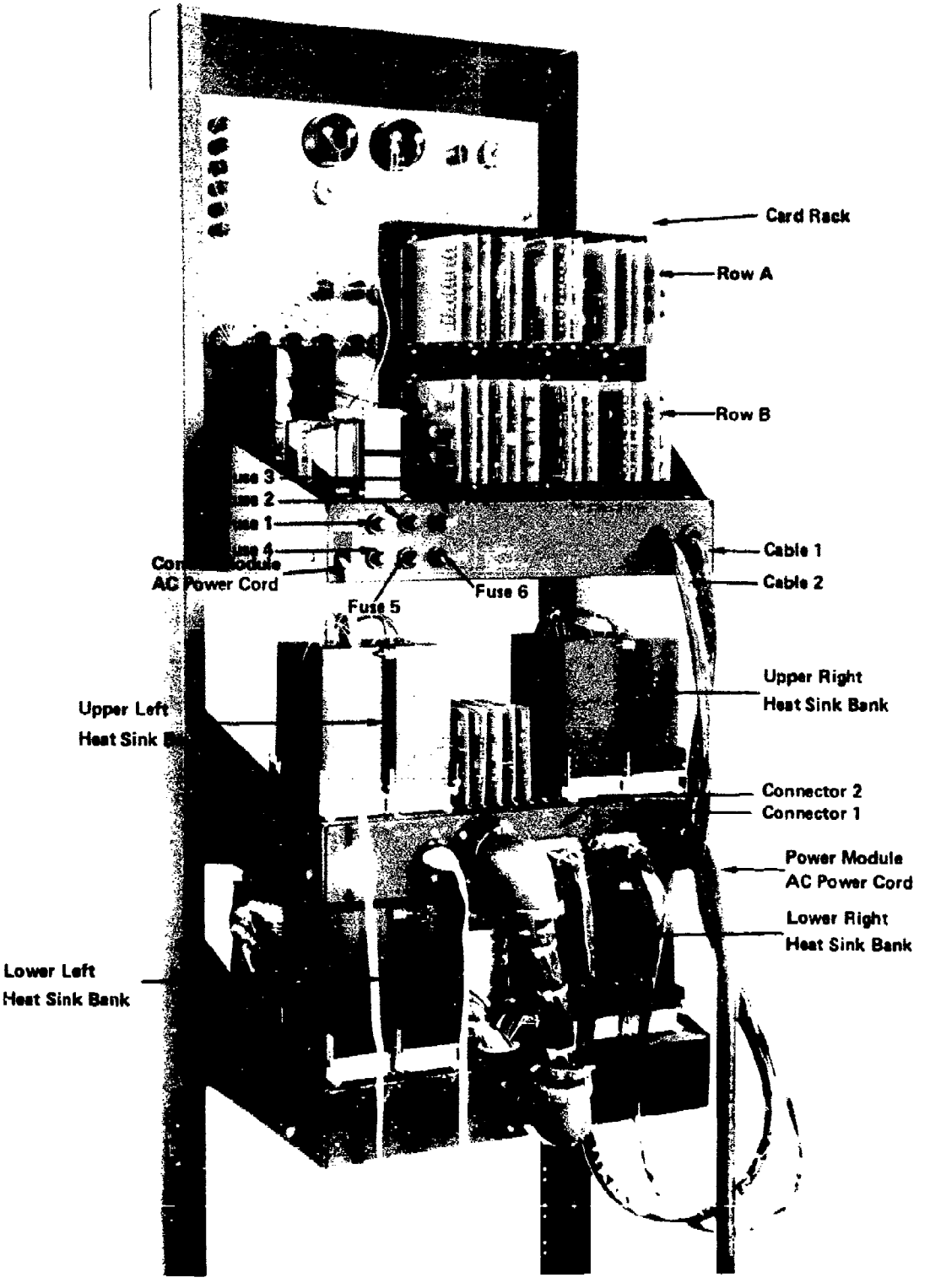

FIGURE V-1. SYSTEM – REAR VIEW

Step 1 Check the placement of logic cards in the Power Module and in the Control Module to ensure that each location contains the specified card. The card location guide for each module is located in Figure V-3 of this manual. After checking the logic cards, be sure the screen covers are in place.

Step 2 Connect Cable No. 1 of the Control Module to Connector No. 1 on the Power Module.

Step 3 Connect Cable No. 2 of the Control Module to Connector No. 2 of the Power Module.

Step 4 Connect the Control Module AC power cord to the grounded receptacle provided on the rear of the Control Module.

Step 5 Connect the cable between the upper chassis and the lower chassis of the Power Module.

Step 6 Check fuse holders 1 through 7 to ensure that each contains the proper size fuse. The value for each fuse is specified in Figure V-4 of this manual.

Step 7 Verify that the AC receptacle, which is to be used for primary AC power for the charger system, is connected in accordance with Figure V-2 of this manual. The AC power line used for primary AC power should be protected for a minimum of 30 amperes.

Once these steps have been completed and the Power Module AC power cord has been connected, the system is ready for operation as covered by Section V of this manual.

2. System Subassembly Layout

Both the Power Module and the Control Module contain subassemblies. The component configuration of some of these subassemblies must be checked during installation. This section of the manual describes the subassemblies and the component layouts associated with each subassembly. Figure V-1 shows the location of each major subassembly as viewed from the rear of the charging system. In this figure, the Control Module is near the top and the Power Module is near the bottom.

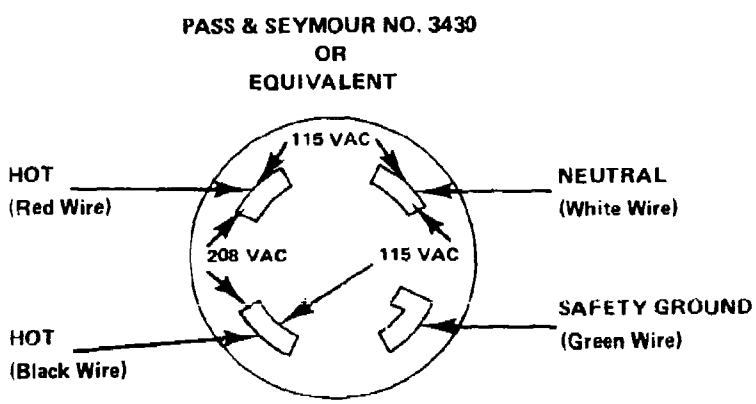

FIGURE V-2. PRIMARY AC RECEPTACLE

a) Control Module Subassemblies

1) Logic Card Rack – The logic for the Control Module is contained on 26 printed circuit boards which connect into the card rack shown in Figure V-1. Each location on the card rack has a specified logic card associated with it. For the most part these cards are not interchangeable from one location to another, so care must be taken to ensure that each location contains its specified card. The location designation on the card rack consists of a letter, which designates the row, and a number, which designates a connector in that row. The card rack is laid out with Row A on the top and Row B on the bottom. The locations within each row are numbered from 1 through 15 starting at the right and proceeding to the left (location No. 1 is on the far right and location No. 15 is on the far left). Thus, a card in location A7 would be on the top row and the seventh location from the right; similarily, a card in location B13 would be on the bottom row in the thirteenth location from the right. There are a total of 30 card connectors located on the card rack; out of these there are two spare connectors in each row. A chart showing the correct card part number for each location is shown in Figure V-3 of the manual. When the logic cards are inserted into the card rack, each card should be checked carefully to ensure that it is placed in the proper location. On the foil side of each printed circuit board is the part number for that board. These part numbers and the chart of Figure V-3 should be used when the cards are inserted into the card rack.

2) Fuse Ratings – The AC power input to the Control Module and each regulated DC voltage is protected by a fuse. The ratings of these fuses and the voltages which they are protecting are specified in Figure V-4 of this manual. If any of these fuses should fail, it should be replaced with a fuse of the same rating.

b) Power Module Subassemblies

1) Logic Cards – The logic for the Power Module is contained on six printed circuit boards which plug into edge connectors located near the middle of the upper chassis of the Power Module. These six card locations have been designated by the letter P followed by a number between 1 and 6. Location P1 is located at the left end of the card subassembly and P6 is located at the right end of the card subassembly. The cross-reference chart for card location and card part number is found in Figure V-5 of this manual. The orientation of the cards should be verified during installation to ensure that each location contains the proper logic card; if an error is made in card placement, serious damage could occur to the system.

2) Fuse Ratings – There are three fuses in the Power Module; one on the back of the upper chassis, one under the upper chassis, and one under the lower chassis. These fuses should be checked prior to system operation after installation. The values and purpose of each fuse is shown in Figure V-6 of this manual. None of these fuses is apparent on Figure V-1.

ROW	LOCATION NUMBER	PRINTED CIRCUIT CARD PART NUMBER	SPECIAL COMMENTS
A	1	4100-3	
A	2	4100-3	
A	3	4100-4	
A	4	4100-1	
A	5	4100-2	
A	6	Unused	This location should contain a version of 4100-5 which has the component values specified on the drawing for 4100-5 for location A7
A	7	4100-5	
A	8	4100-18	This location should contain a version of 4100-5 which has the component values specified on the drawing for 4100-5 for location A9
A	9	4100-5	
A	10	Unused	
A	11	4100-13	This location should contain a version of 4100-5 which has the component values specified on the drawing for 4100-5 for location A12
A	12	4100-5	
A	13	4100-5	This location should contain a version of 4100-5 which has the component values specified on the drawing for 4100-5 for location A13
A	14	4100-14	
A	15	4100-22	
B	1	4100-6	
B	2	4100-9	
B	3	4100-17	
B	4	4100-16	
B	5	Unused	
B	6	4100-19	
B	7	4100-20	
B	8	4100-21	
B	9	Unused	
B	10	4100-8	
B	11	4100-7	
B	12	4100-6	
B	13	4100-6	
B	14	4100-16	
B	15	4100-12	

FIGURE V-3. CONTROL MODULE LOGIC CARD LOCATION GUIDE

FUSE NUMBER (AS INDICATED ON FIGURE 2)	VOLTAGE PROTECTED	FUSE CURRENT RATING	FUSE STYLE
Fuse 1	+ 5 VDC (Logic)	1.0 A	3 AG
Fuse 2	+28 VDC (Logic)	0.5 A Slow Blow	3 AG
Fuse 3	+15 VDC (Logic)	1.0 A	3 AG
Fuse 4	115 VAC (Control Module Power)	1.5 A Slow Blow	3 AG
Fuse 5	+30 VDC (Logic)	1.0 A	3 AG
Fuse 6	−15 VDC (Logic)	1.0 A	3 AG

FIGURE V-4. CONTROL MODULE FUSE SPECIFICATION

LOCATION	PRINTED CIRCUIT CARD PART NUMBER
P1	4100-23
P2	4100-24
P3	4100-27
P4	4100-28
P5	4100-26
P6	4100-29

FIGURE V-5. POWER MODULE LOGIC CARD LOCATION GUIDE

FUSE NO. (NOT SHOWN ON FIGURE 2)	PURPOSE OF FUSE	FUSE CURRENT RATING	FUSE STYLE
Fuse 7	Protection of battery and Charge Pass Element	40 A	TRON KAH-40
Fuse 8	Protection of battery and Discharge Pass Element	15 A Slow Blow	3AB
Fuse 9	Protection of AC power associated with Discharge Power Supply and Logic Power Supplies in Power Module	5 A Slow Blow	3 AG

FIGURE V-6. POWER MODULE FUSE SPECIFICATION

VI. SCHEMATIC AND WIRING DIAGRAM

This portion of the report contains the schematic diagram for the logic and control circuity and the wiring diagrms for the main power circuitry of the charging system. These diagrams are sufficient to allow trouble-shooting and maintenance of the charger.

UNLESS OTHERWISE SPECIFIED
.X ± .030 .XX ± .010 .XXX ± .003 ANGULAR ± ½°

LET.	DATE	REVISION	MADE BY	CK BY

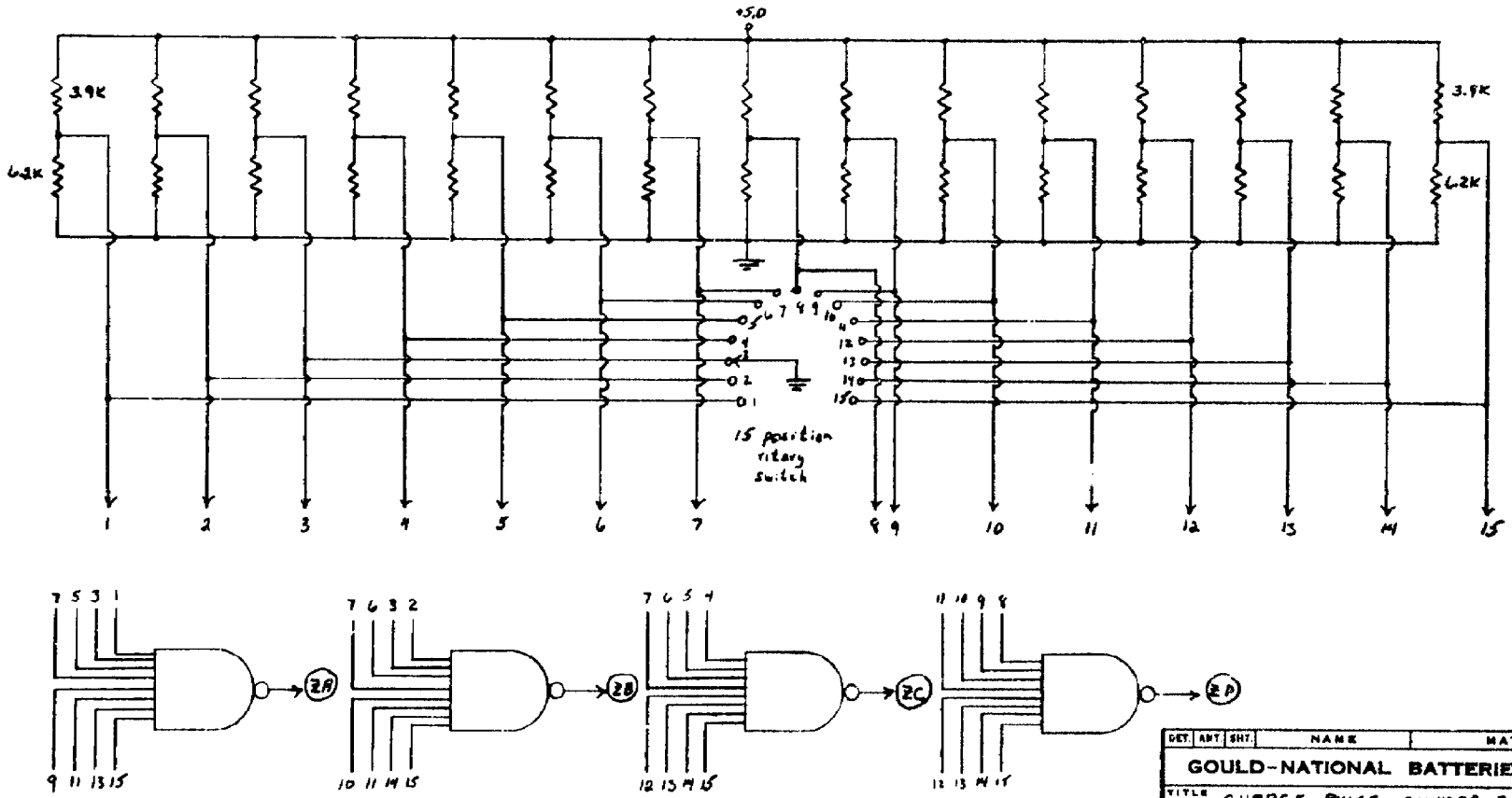

DET.	APP.	SHT.	NAME	MAT'L

GOULD-NATIONAL BATTERIES, INC.

TITLE CHARGE PULSE COUNTER SET
DIGITAL LOGIC

PART NO. 4100-1 LOCATION A4 DATE

DR. CH. APPR.

SCALE

SHT. OF

B

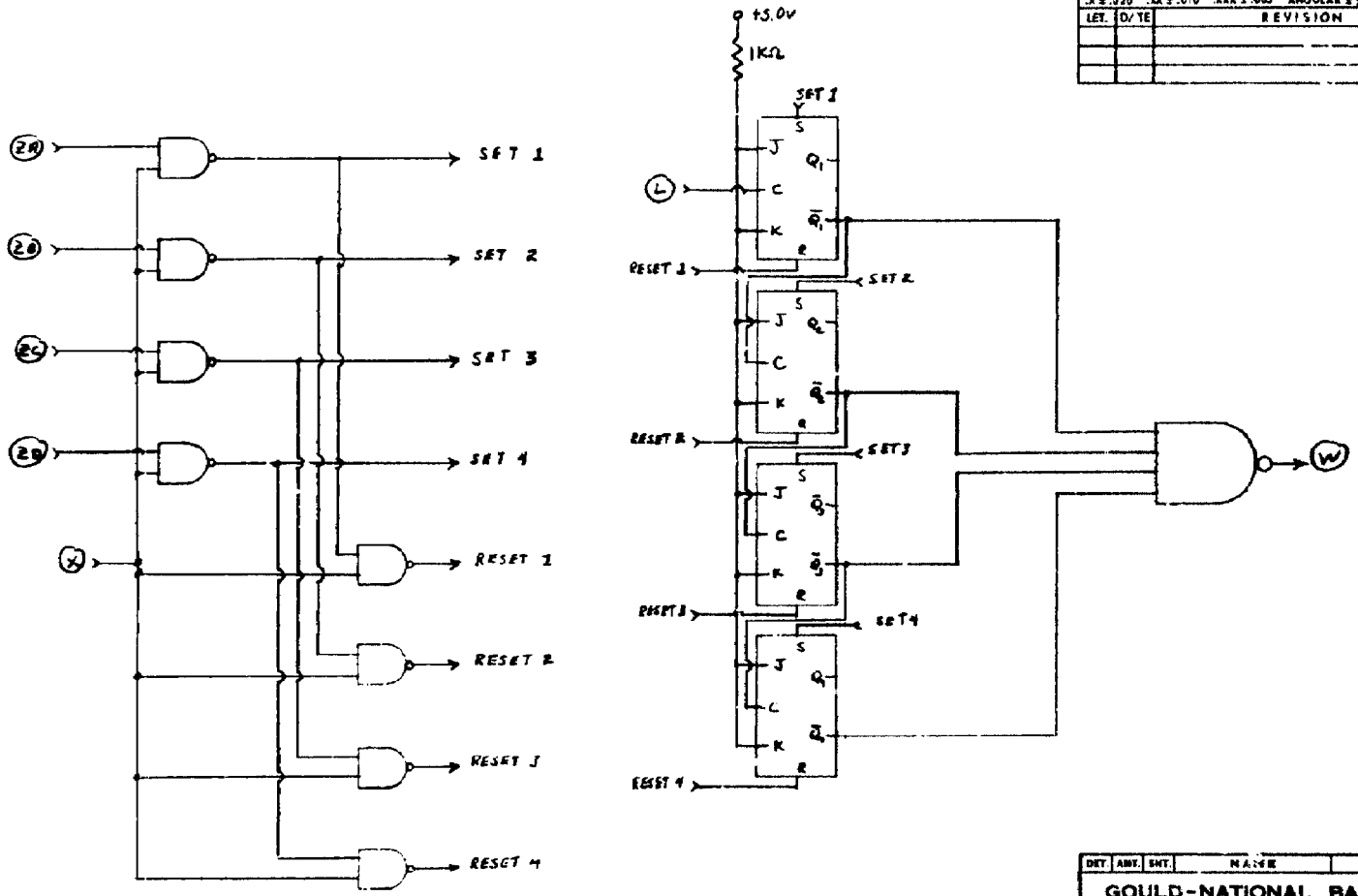

UNLESS OTHERWISE SPECIFIED
.X ± .020 .XX ± .010 .XXX ± .003 ANGULAR ± ½°

LET.	DATE	REVISION	APPR.	CK.

DET.	ADM.	SHT.	NAME	MAT'L

GOULD-NATIONAL BATTERIES, INC.

TITLE CHARGE PULSE COUNTER

PART NO. 4100-2 LOCATION A8 DATE

DR. CH. APPR.

SCALE

SHT. ___ OF ___ B

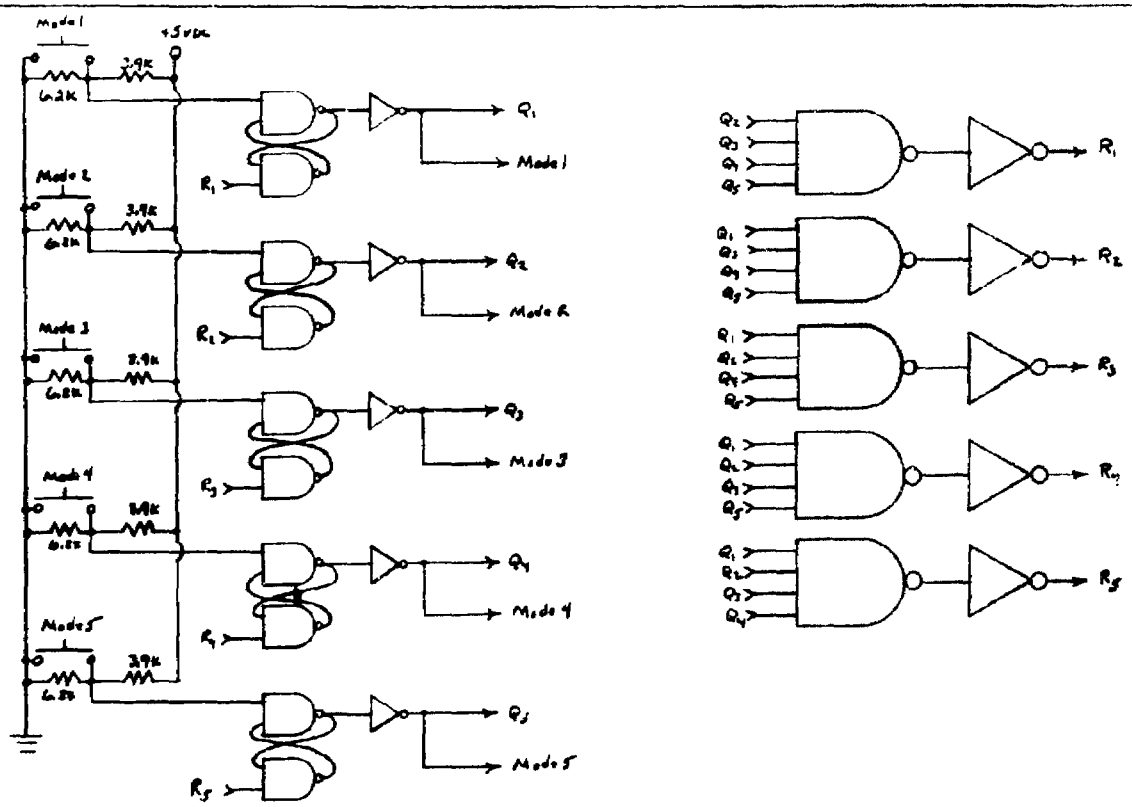

UNLESS OTHERWISE SPECIFIED
.X ± .020 .XX ± .010 .XXX ± .003 ANGULAR ± 1/2°

LET.	DATE	REVISION		

DET.	ANT.	SHT.	NAME	MAT'L

GOULD-NATIONAL BATTERIES, INC.

TITLE
MODE SELECTION CONTROL

PART NO. 4100-3 LOCATIONS A1, 2 DATE

DR. CH. APPR.

SCALE

SHT. ___ OF ___

B

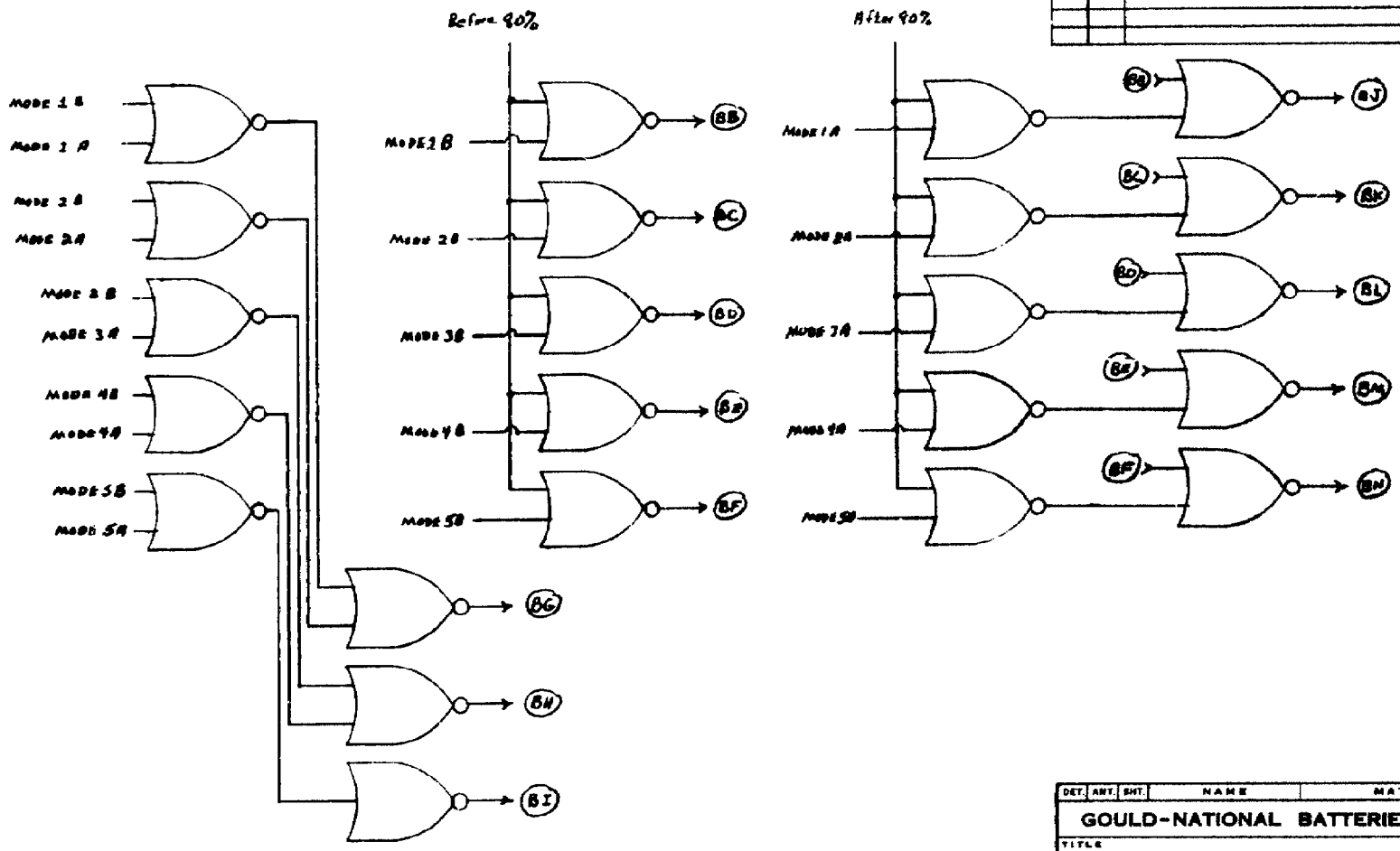

UNLESS OTHERWISE SPECIFIED
.X ± .020 .XX ± .010 .XXX ± .003 ANGULAR ± ½°

LET.	DATE	REVISION	MADE BY	CK BY

DET.	ANT.	SHT.	NAME	MAT'L

GOULD-NATIONAL BATTERIES, INC.

TITLE
MODE DECODE LOGIC

PART NO. 4100-4 LOCATION A3 DATE 7/23/71
DR. CH. APPR.
SCALE
SHT. ___ OF ___

B

LOC.	VALUE A7	A9	A12	A13
R1	100Ω trim pot	100Ω trim pot	200Ω trim pot	100Ω trim pot
R2	100Ω trim pot	100Ω trim pot	200Ω trim pot	100Ω trim pot
R3	100Ω trim pot	100Ω trim pot	100Ω trim pot	50Ω trim pot
R4	NOT USED	NOT USED	100Ω trim pot	NOT USED
R5	22Ω	22Ω	22Ω	0Ω
R6	8.2KΩ	8.2KΩ	8.2KΩ	8.2KΩ
R7	51Ω	51Ω	220Ω	51Ω
R8	10Ω	10Ω	51Ω	10Ω
C1	0.0022 mfd	0.0022 mfd	5 pf	0.0022 mfd
C2	0.022 mfd	0.022 mfd	300 pf	0.022 mfd
C3	0.22 mfd	0.22 mfd	0.0022 mfd	0.022 mfd
C4	NOT USED	NOT USED	0.022 mfd	NOT USED

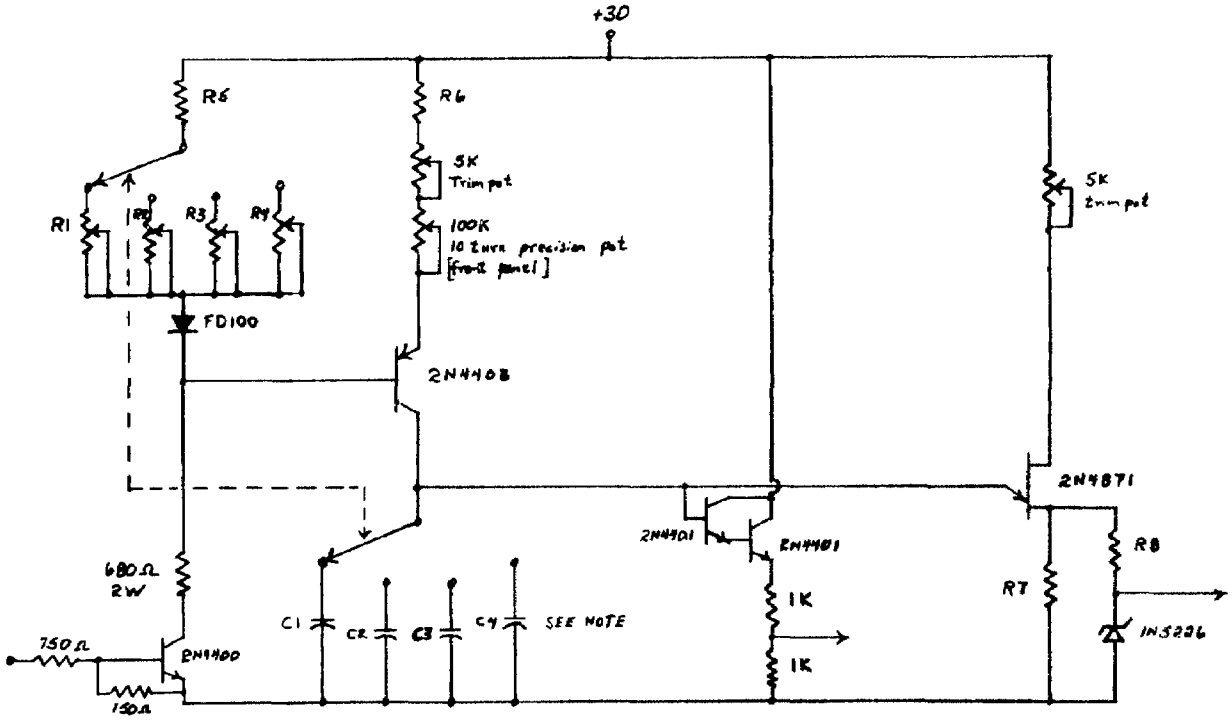

UNLESS OTHERWISE SPECIFIED
.X ± .030 .XX ± .010 .XXX ± .003 ANGULAR ± ½°

LET.	DATE	REVISION	MADE BY	CK BY

DET.	ABT.	SHT.	NAME	MAT'L
			GOULD-NATIONAL BATTERIES, INC.	

TITLE OSCILLATOR MODULE

PART NO. 4100-3 LOCATIONS A7, 9, 12, 13 DATE

DR. CK. APPR.

SCALE

SHT. ___ OF ___ B

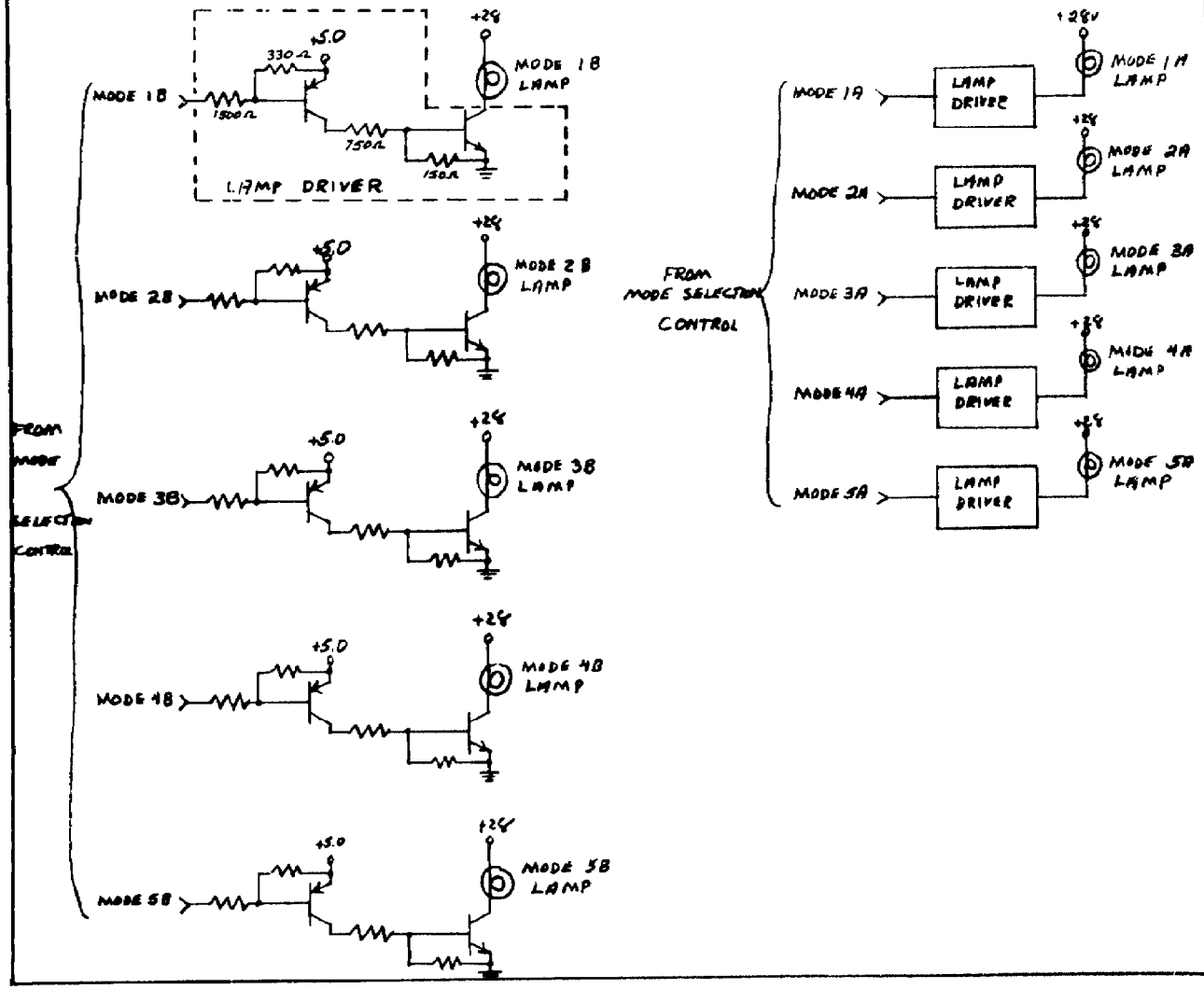

UNLESS OTHERWISE SPECIFIED
.X ± .020 .XX ± .010 .XXX ± .003 ANGULAR ± 1/2°

LET.	DATE	REVISION		

DET.	ANT.	SHT.	NAME	MAT'L

GOULD-NATIONAL BATTERIES, INC.

TITLE
MODE INDICATOR LAMP DRIVERS

PART NO. 4100-6 LOCATION B1 DATE

DR. CH. APPR.

SCALE

SHT. ___ OF ___

B

UNLESS OTHERWISE SPECIFIED
.X ± .020 .XX ± .010 .XXX ± .003 ANGULAR ± ½°

LET.	DATE	REVISION	APPR.	CH.

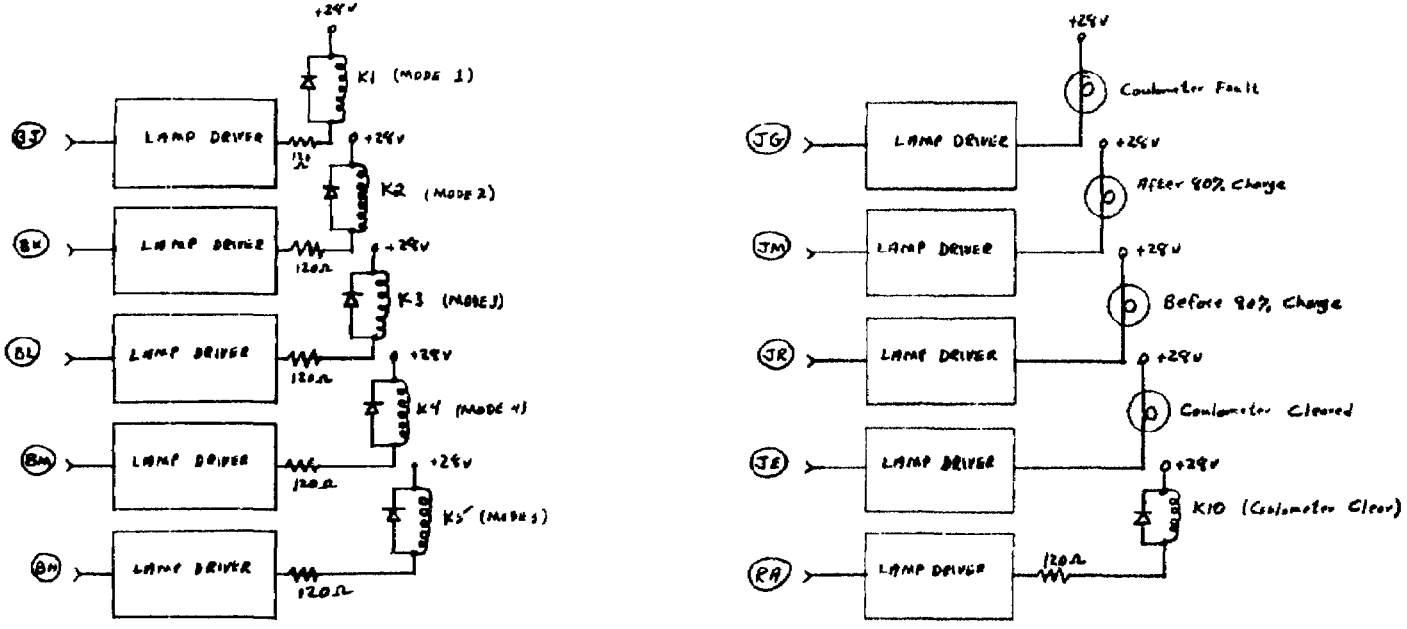

DET.	AMT.	SHT.	NAME	MAT'L

GOULD-NATIONAL BATTERIES, INC.

TITLE
LAMP & RELAY DRIVER

PART NO. 4100-6 LOCATION B12 DATE
DR. CH. APPR.
SCALE
SHT. ___ OF ___

B

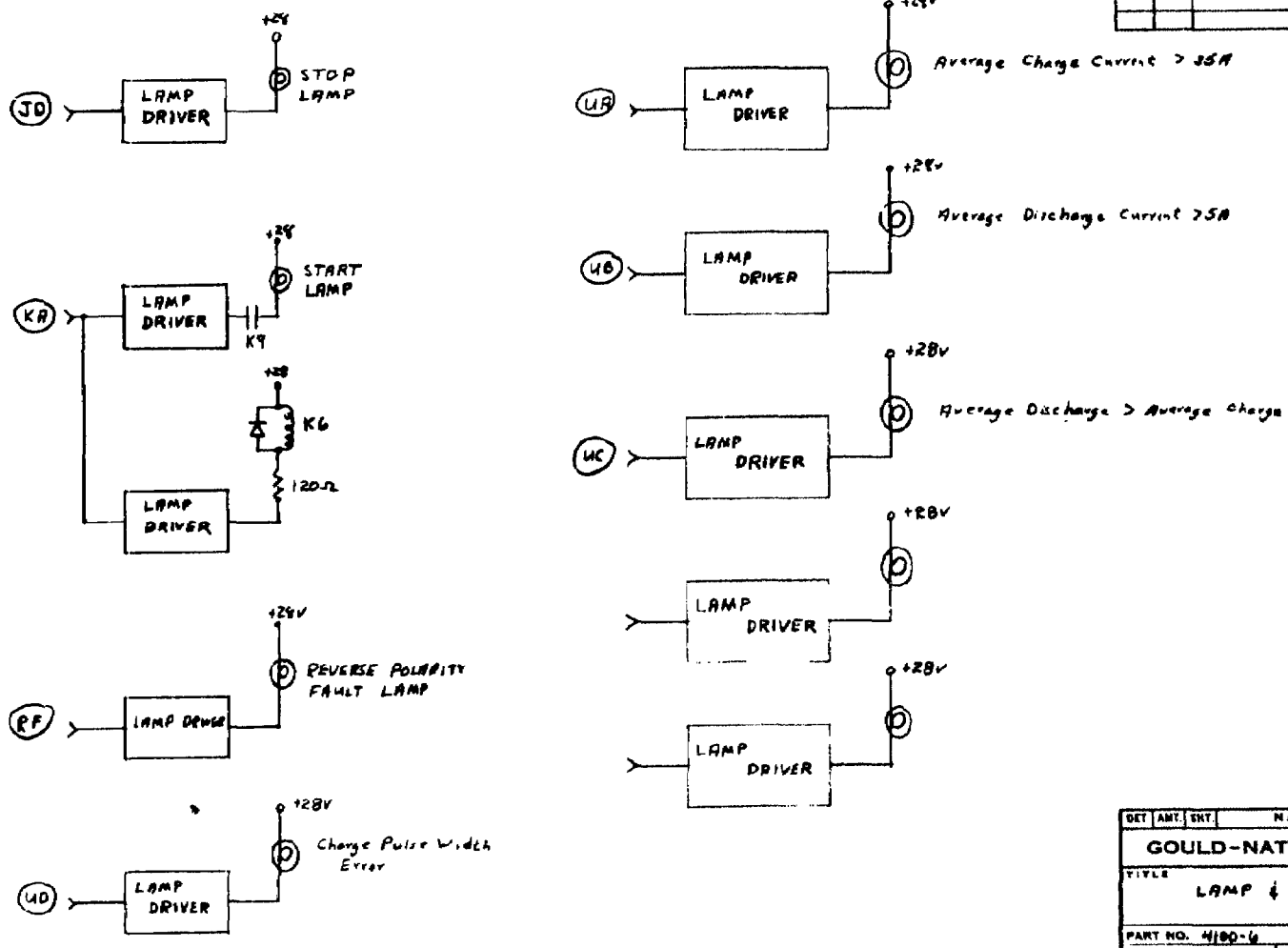

UNLESS OTHERWISE SPECIFIED
.X ± .020 .XX ± .010 .XXX ± .003 ANGULAR ± ½°

LET.	DATE	REVISION	APPR.	CK.

DET	AMT.	SHT.	NAME	MAT'L

GOULD-NATIONAL BATTERIES, INC.

TITLE
LAMP & RELAY DRIVER

PART NO. 4180-6 LOCATION B15 DATE
DR. CH. APPR.
SCALE
SHT. ___ OF ___ B

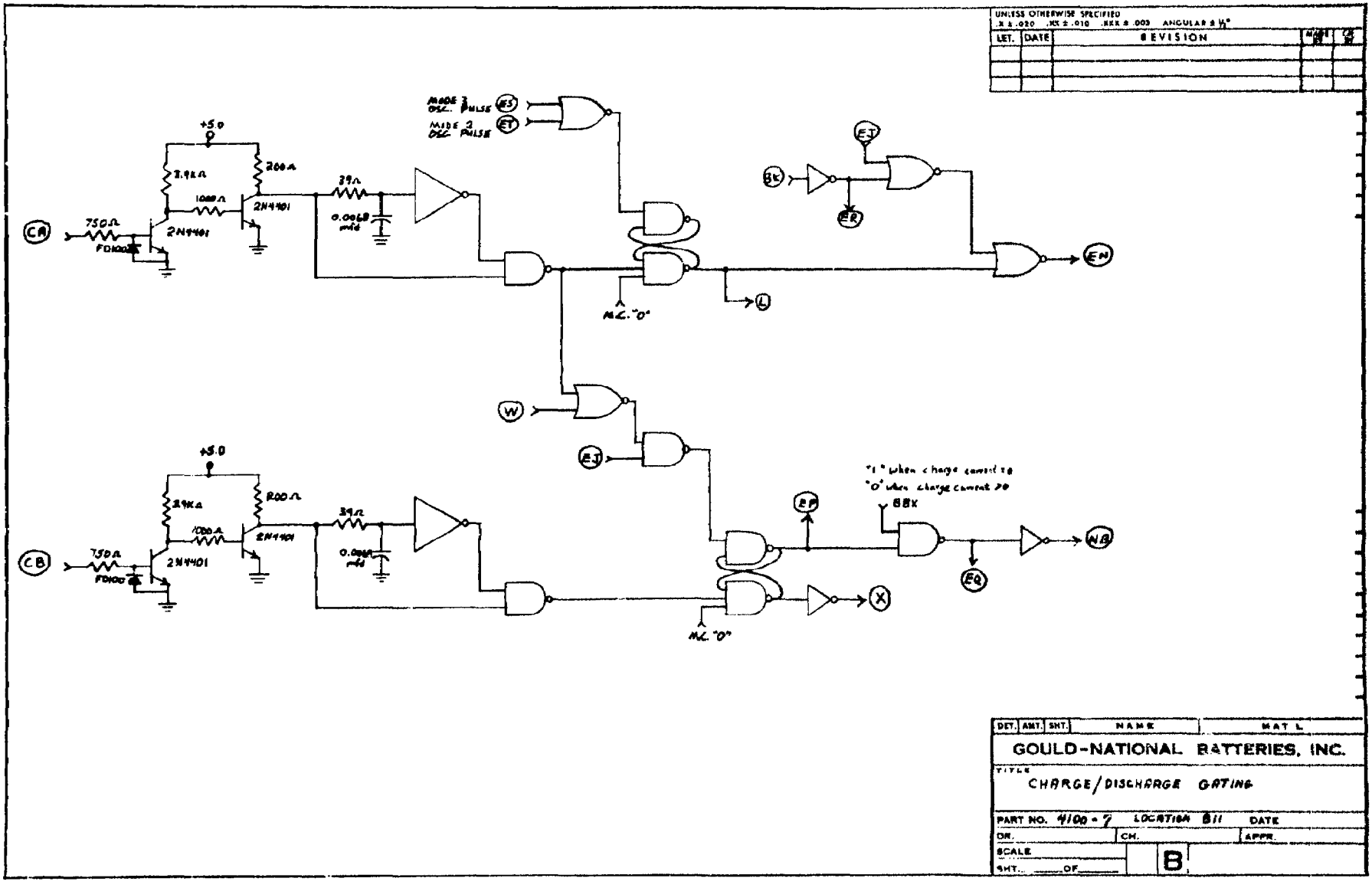
UNLESS OTHERWISE SPECIFIED
.X ± .020 .XX ± .010 .XXX ± .005 ANGULAR ± ½°
LET. DATE REVISION
MODE 3 OSC. PULSE
MODE 2 OSC. PULSE
ET
ES
+5.0
2.9KΩ
200Ω
1000Ω
2N4401
39Ω
0.0068 mfd
750Ω
FD100
CA
CB
EK
ER
EJ
EN
L
M.C. "0"
W
EP
"1" when charge current to
"0" when charge current to
88K
EQ
NB
X
DET. AMT. SHT. NAME MAT'L
GOULD-NATIONAL BATTERIES, INC.
TITLE
CHARGE/DISCHARGE GATING
PART NO. 4100-7 LOCATION B11 DATE
DR. CH. APPR.
SCALE
SHT. OF
B

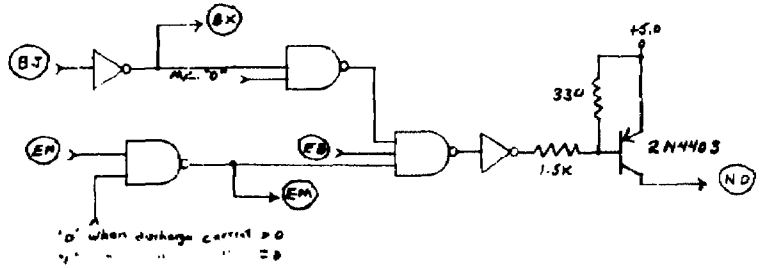

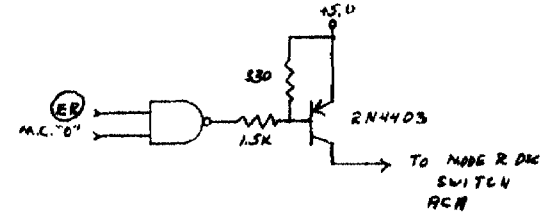

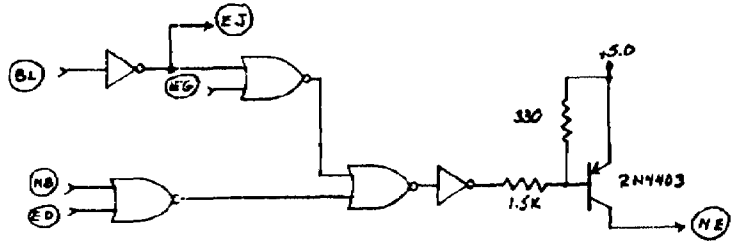

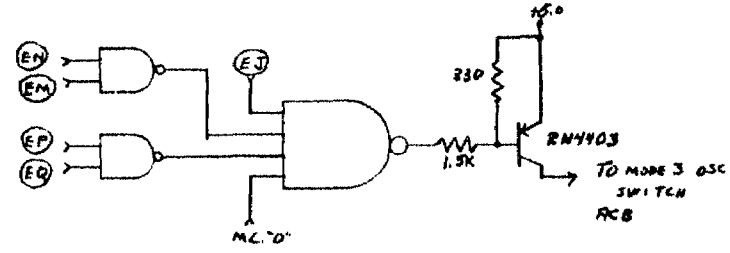

UNLESS OTHERWISE SPECIFIED
X ± .020 .XX ± .010 .XXX ± .003 ANGULAR ± ½°

LET.	DATE	REVISION	MADE BY	CH. BY

DET.	AMT.	SHT.	NAME	MAT'L

GOULD-NATIONAL BATTERIES, INC.

TITLE CHARGE/DISCHARGE ENABLE CONTROL

PART NO. 4400-[illegible] LOCATION B10 DATE

DR. CH. APPR.

SCALE

SHT. ___ OF ___ B

UNLESS OTHERWISE SPECIFIED
.X ± .020 .XX ± .010 .XXX ± .003 ANGULAR ± ½°

LET.	DATE	REVISION		

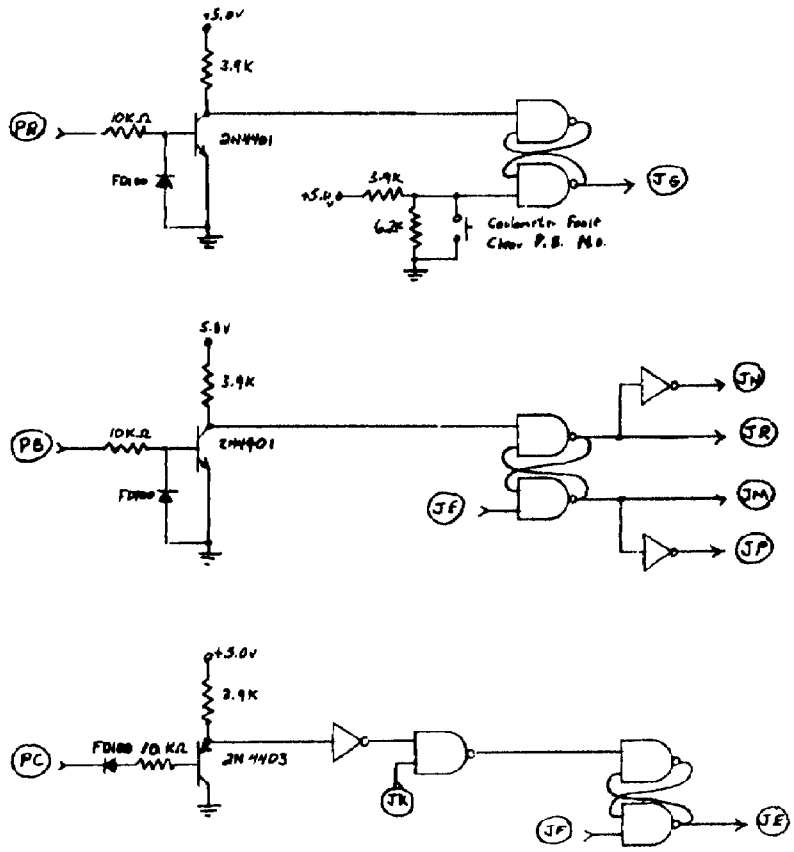

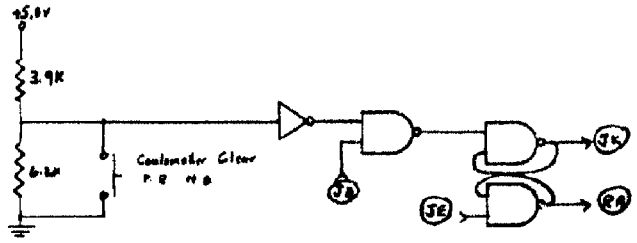

NOTES:
1. JE does not go off board
2. JK does not go off board

DET	AMT.	SHT.	NAME	MAT'L

GOULD-NATIONAL BATTERIES, INC.

TITLE CHARGE INTEGRATOR DIGITAL LOGIC

PART NO. 4100-9 LOCATION B2 DATE

DR. CH. APPR.

SCALE

SHT. ___ OF ___

B

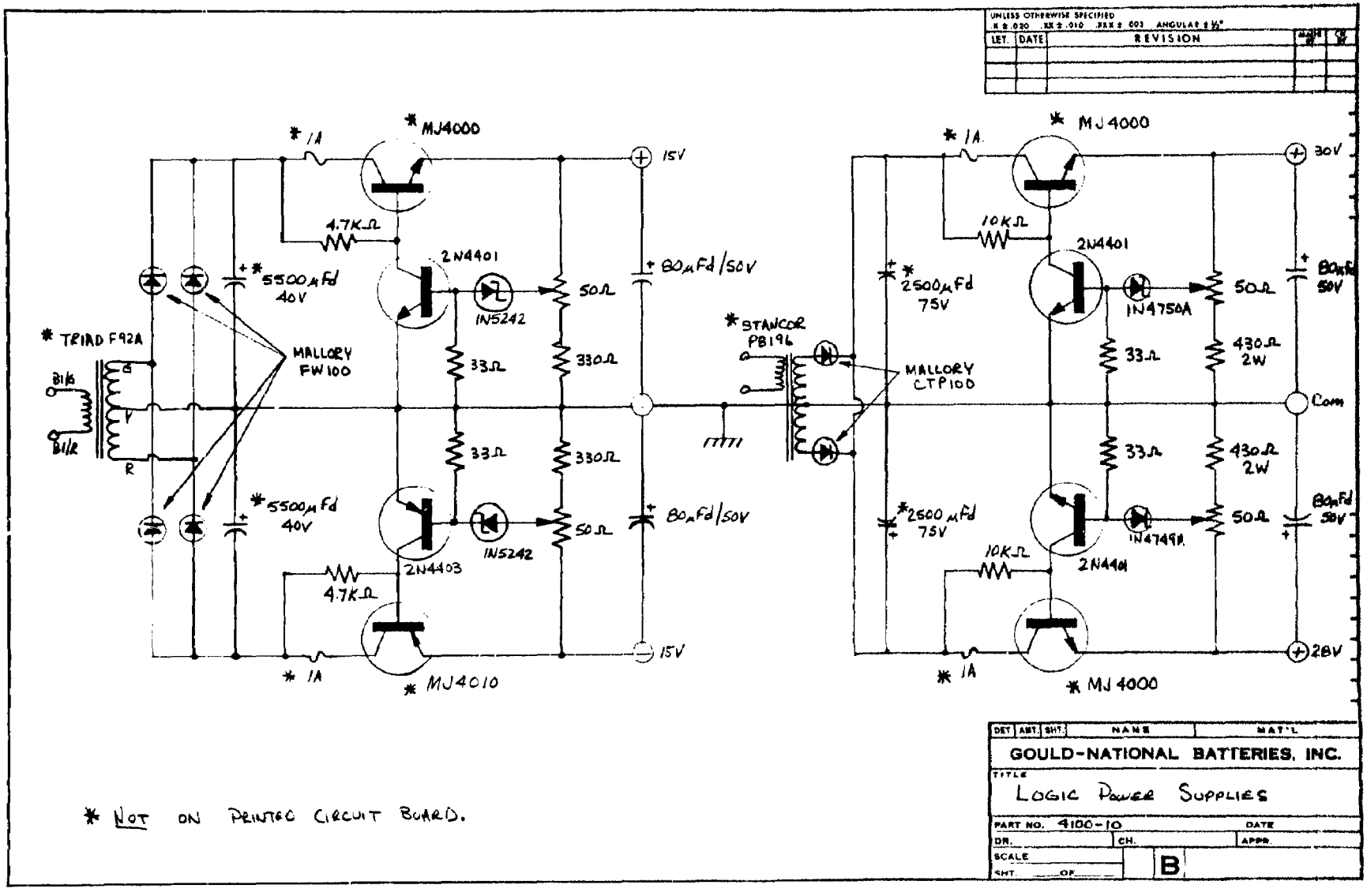
UNLESS OTHERWISE SPECIFIED
.X ± .020 .XX ± .010 .XXX ± .003 ANGULAR ± ½°
LET. DATE REVISION
* TRIAD F92A
B1/B
B1/R
G
V
R
MALLORY FW100
* 5500 μFd 40V
* 5500 μFd 40V
* 1A
* 1A
4.7KΩ
4.7KΩ
* MJ4000
2N4401
2N4403
* MJ4010
1N5242
1N5242
50Ω
330Ω
330Ω
50Ω
33Ω
33Ω
15V
15V
80μFd/50V
80μFd/50V
* STANCOR PB196
MALLORY CTP100
* 1A
* 1A
* MJ4000
* MJ4000
10KΩ
10KΩ
2N4401
2N4401
* 2500 μFd 75V
* 2500 μFd 75V
1N4750A
1N4749A
50Ω
50Ω
33Ω
33Ω
430Ω 2W
430Ω 2W
30V
Com
28V
80μFd 50V
80μFd 50V
* NOT ON PRINTED CIRCUIT BOARD.
DET ABT SHT NAME MAT'L
GOULD-NATIONAL BATTERIES, INC.
TITLE
LOGIC POWER SUPPLIES
PART NO. 4100-10
DATE
DR.
CH.
APPR.
SCALE
SHT. OF
B

UNLESS OTHERWISE SPECIFIED
.X ± .030 .XX ± .010 .XXX ± .003 ANGULAR ± ½°

LET.	DATE	REVISION	MADE BY	CK BY

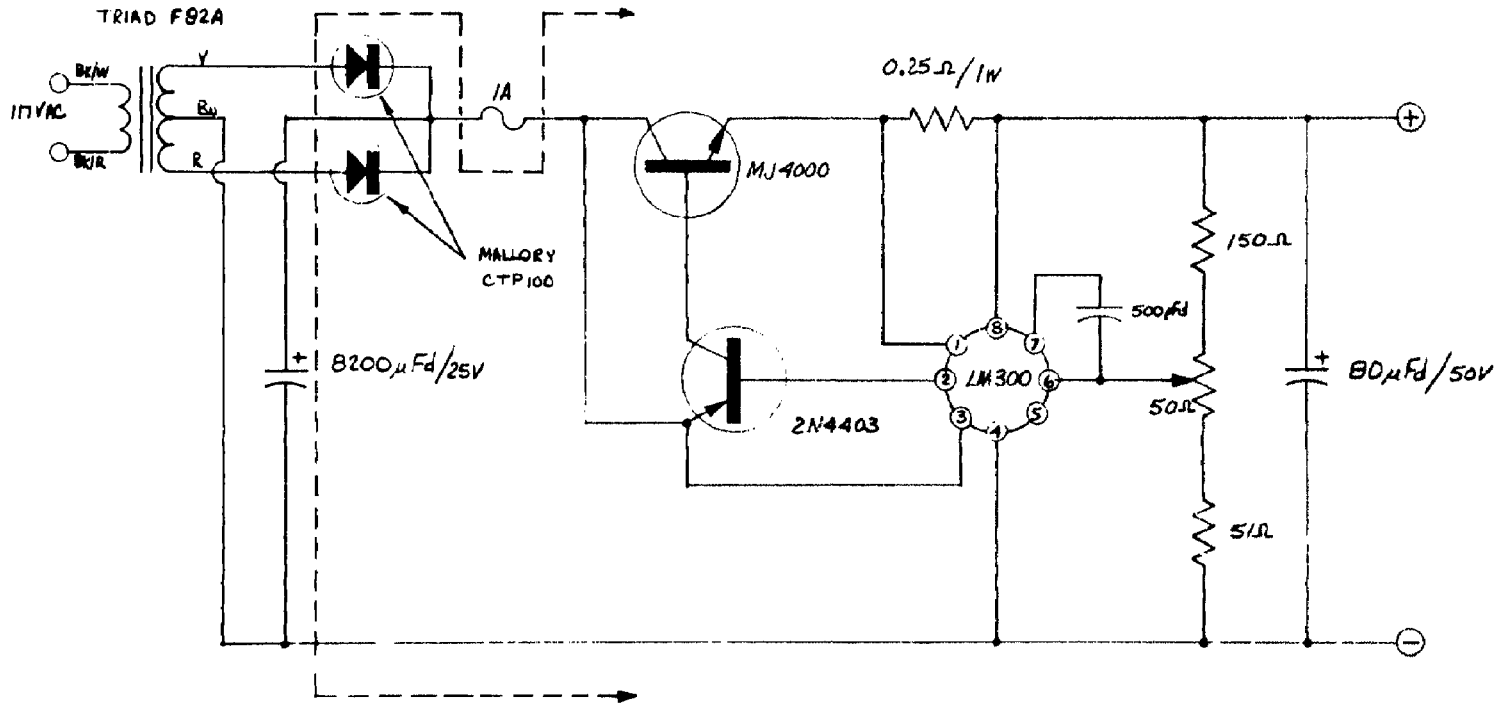

NOTE: COMPONENTS OUTSIDE DOTTED LINE NOT ON P.C. BOARD.

DET	ASST	SH	NAME	MAT'L
GOULD-NATIONAL BATTERIES, INC.				
TITLE + 5V SUPPLY [CONTROL MODULE]				
PART NO. 4100-11			DATE	
DR.		CK.	APPR.	
SCALE			B	
SHT. ___ OF ___				

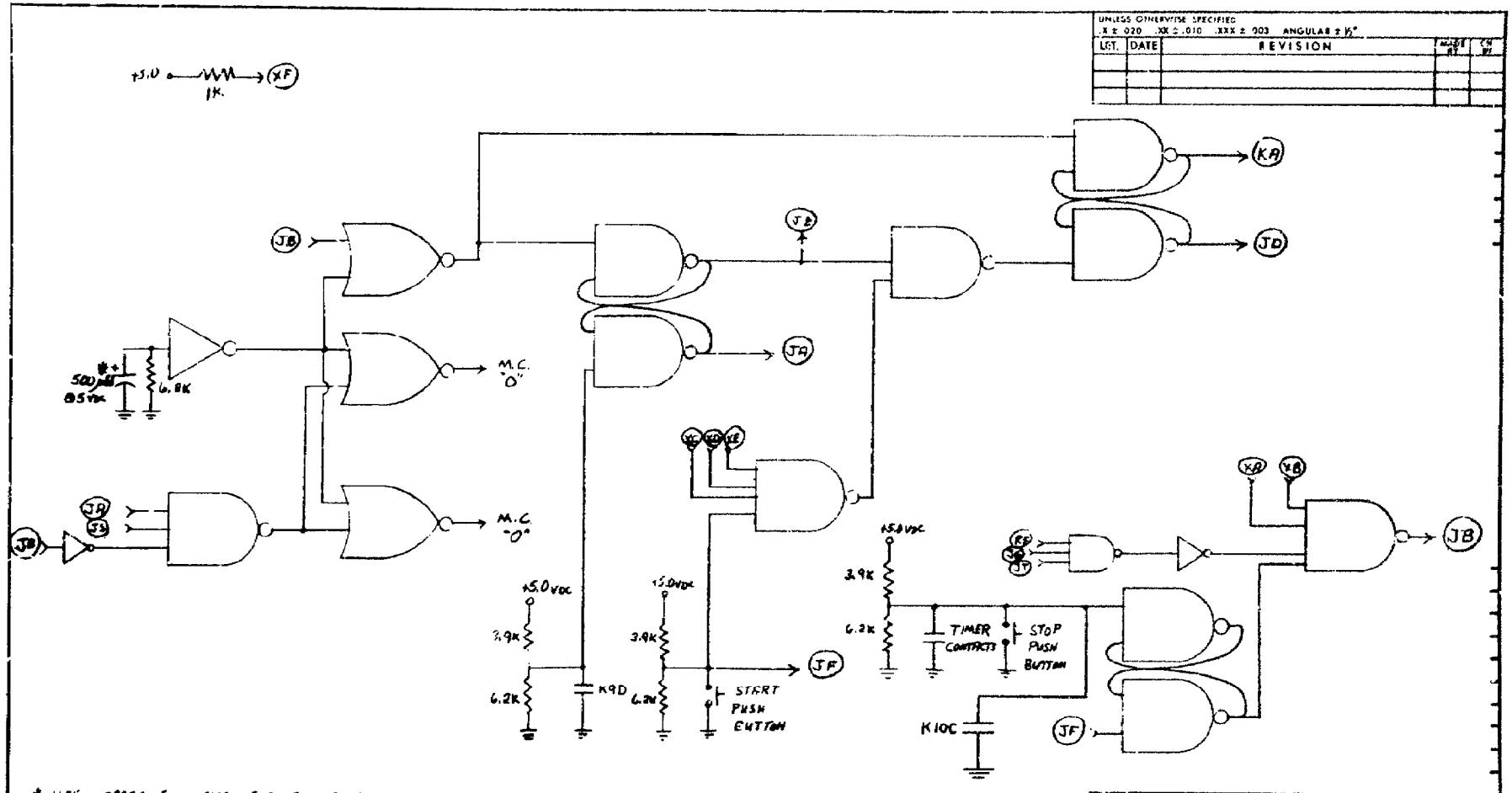

# USE SPRAGUE 500D 503G006 LH7
Diam = 0.345"
Body Length = 1.536"

UNLESS OTHERWISE SPECIFIED
.X ± .020 .XX ± .010 .XXX ± .003 ANGULAR ± ½°

LET.	DATE	REVISION	MADE BY	CK BY

QTY	ART.	SHT.	NAME	MAT'L

GOULD-NATIONAL BATTERIES, INC.

TITLE
START / STOP CONTROL

PART NO. 4400-12 LOCATION B13 DATE
DR. CH. APPR.
SCALE
SHT. ___ OF ___ B

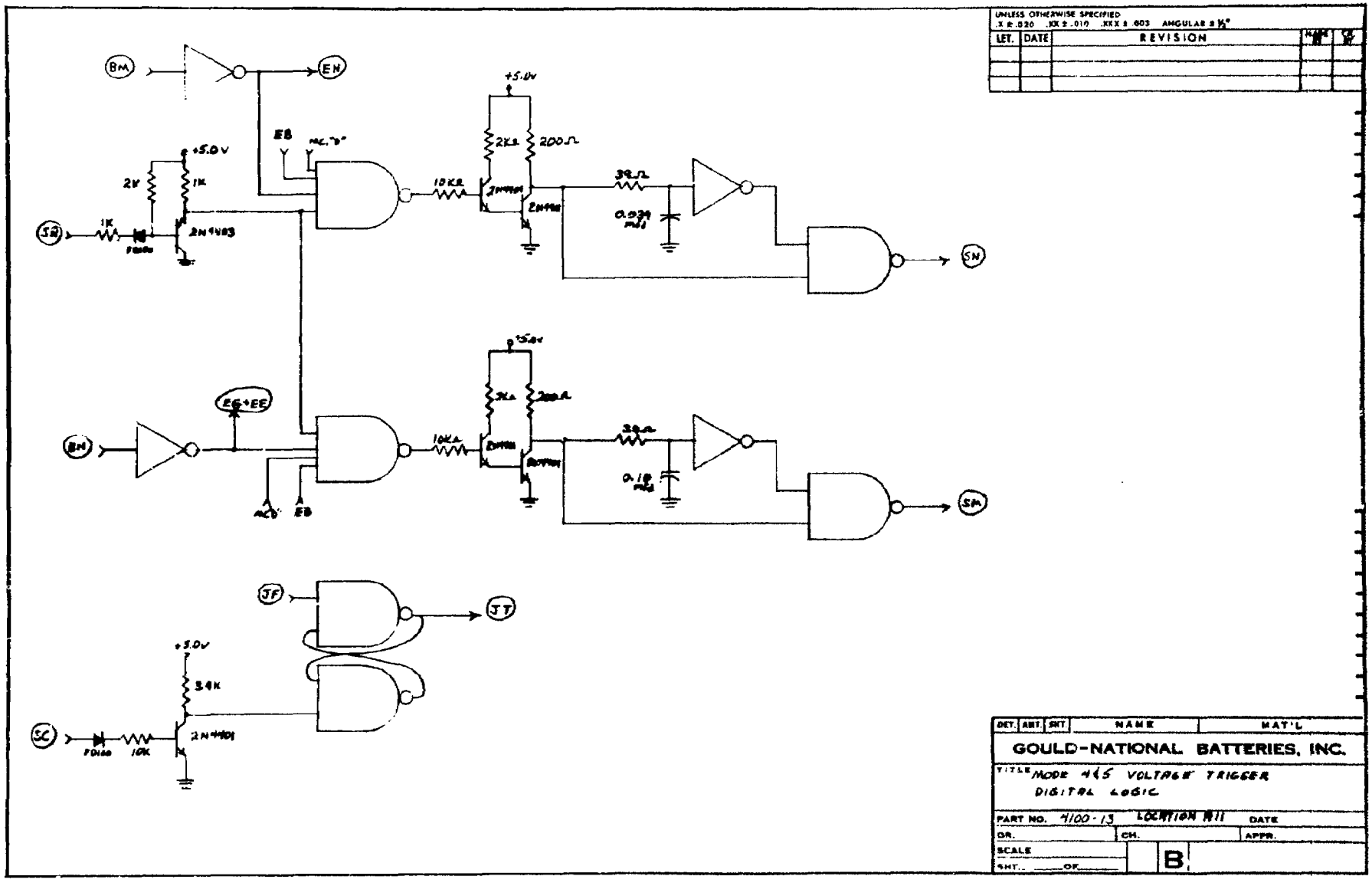
UNLESS OTHERWISE SPECIFIED
.X ± .020 .XX ± .010 .XXX ± .003 ANGULAR ± ½°
LET. DATE REVISION
BM
EN
+5.0V
EB
MC "B"
2K
200Ω
2V
1K
10KΩ
39Ω
0.039 mfd
SR
1K
2N4403
SN
EG+EE
BH
10KΩ
0.18 mfd
MC "B"
EB
SH
JF
JT
+5.0V
3.9K
SC
2N4401
10K
DET. ABT. SRT. NAME MAT'L
GOULD-NATIONAL BATTERIES, INC.
TITLE MODE 4 & 5 VOLTAGE TRIGGER
DIGITAL LOGIC
PART NO. 4100-13 LOCATION A11 DATE
DR. CH. APPR.
SCALE
SHT. OF
B

UNLESS OTHERWISE SPECIFIED
.X ± .020 .XX ± .010 .XXX ± .003 ANGULAR ± ½°

LET.	DATE	REVISION	MADE BY	CK. BY

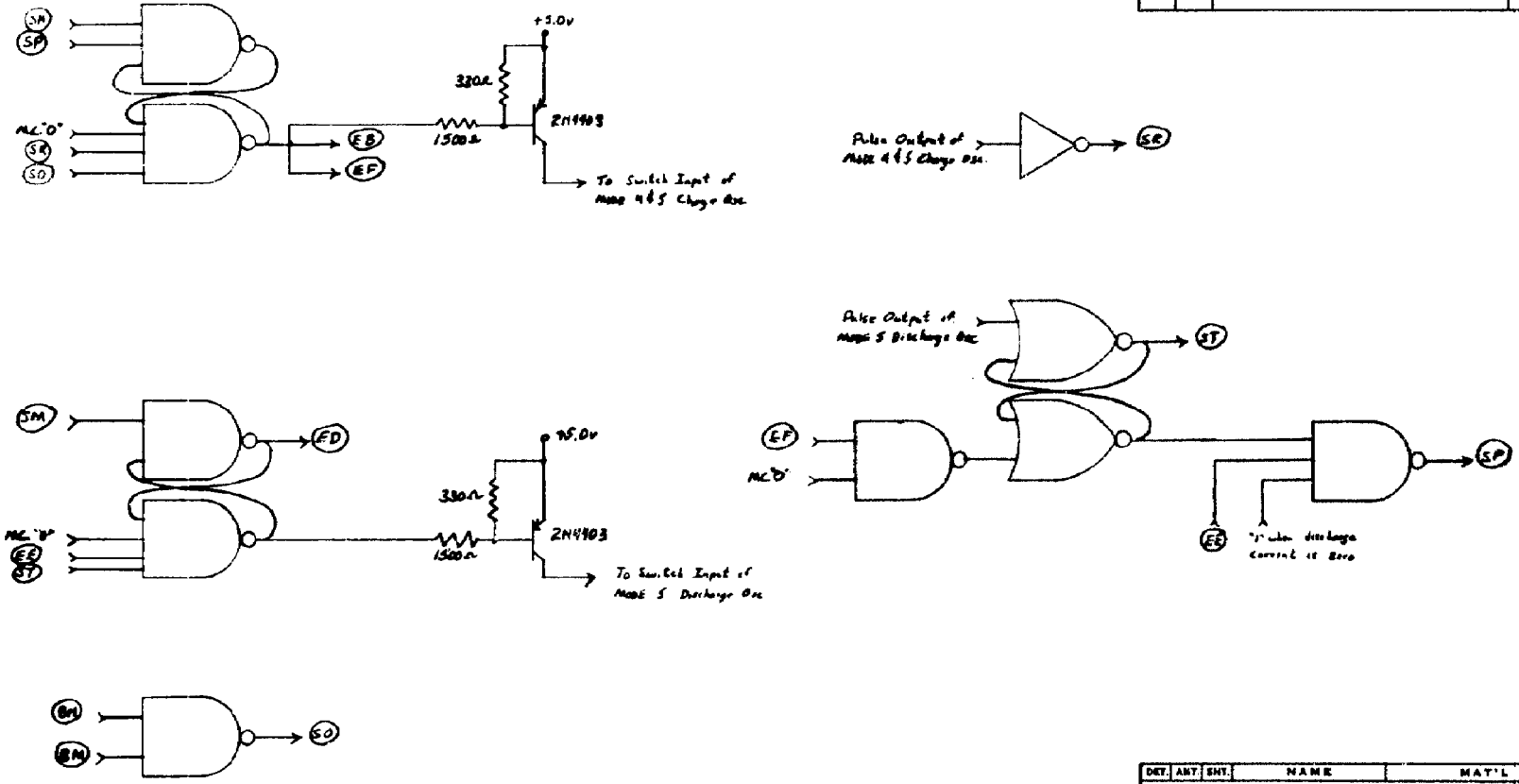

DET.	ANT.	SHT.	NAME	MAT'L

GOULD-NATIONAL BATTERIES, INC.

TITLE MODE 4 & 5 CHARGE/DISCHARGE PULSE GATE & OSCILLATOR CONTROL

PART NO. 4100-14 LOCATION A14 DATE

DR. CH. APPR.

SCALE

SHT. ___ OF ___ B

UNLESS OTHERWISE SPECIFIED
.X ± .020 .XX ± .010 .XXX ± .003 ANGULAR ± ½°

LET.	DATE	REVISION	APPR.	CK.

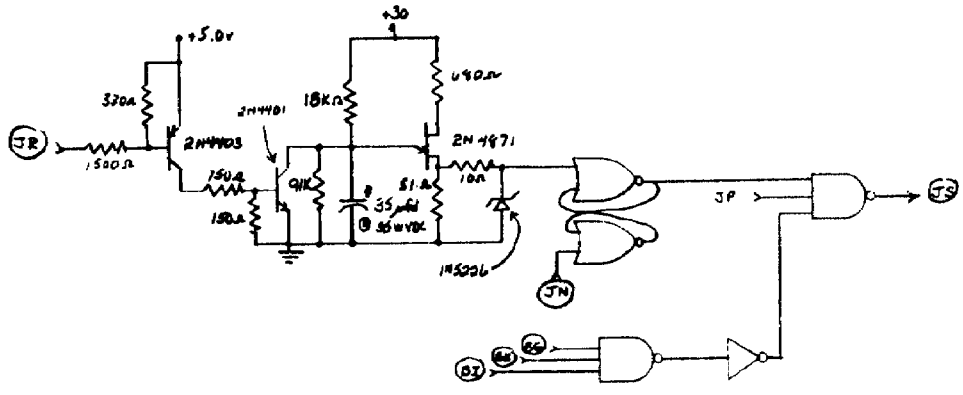

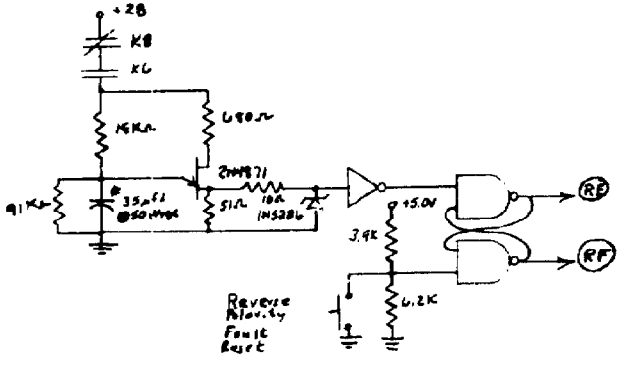

* USE SPRAGUE 500D 356G050 DC7
Diam: 0.385"
Body Length: 0.848"

DET.	ASST	SHT.	NAME	MAT'L

GOULD-NATIONAL BATTERIES, INC.

TITLE
MODE TRANSITION & REVERSE POLARITY TIME DELAYS

PART NO. 4100-15 LOCATION B14 DATE

DR. CH. APPR.

SCALE

SHT. ___ OF ___

B

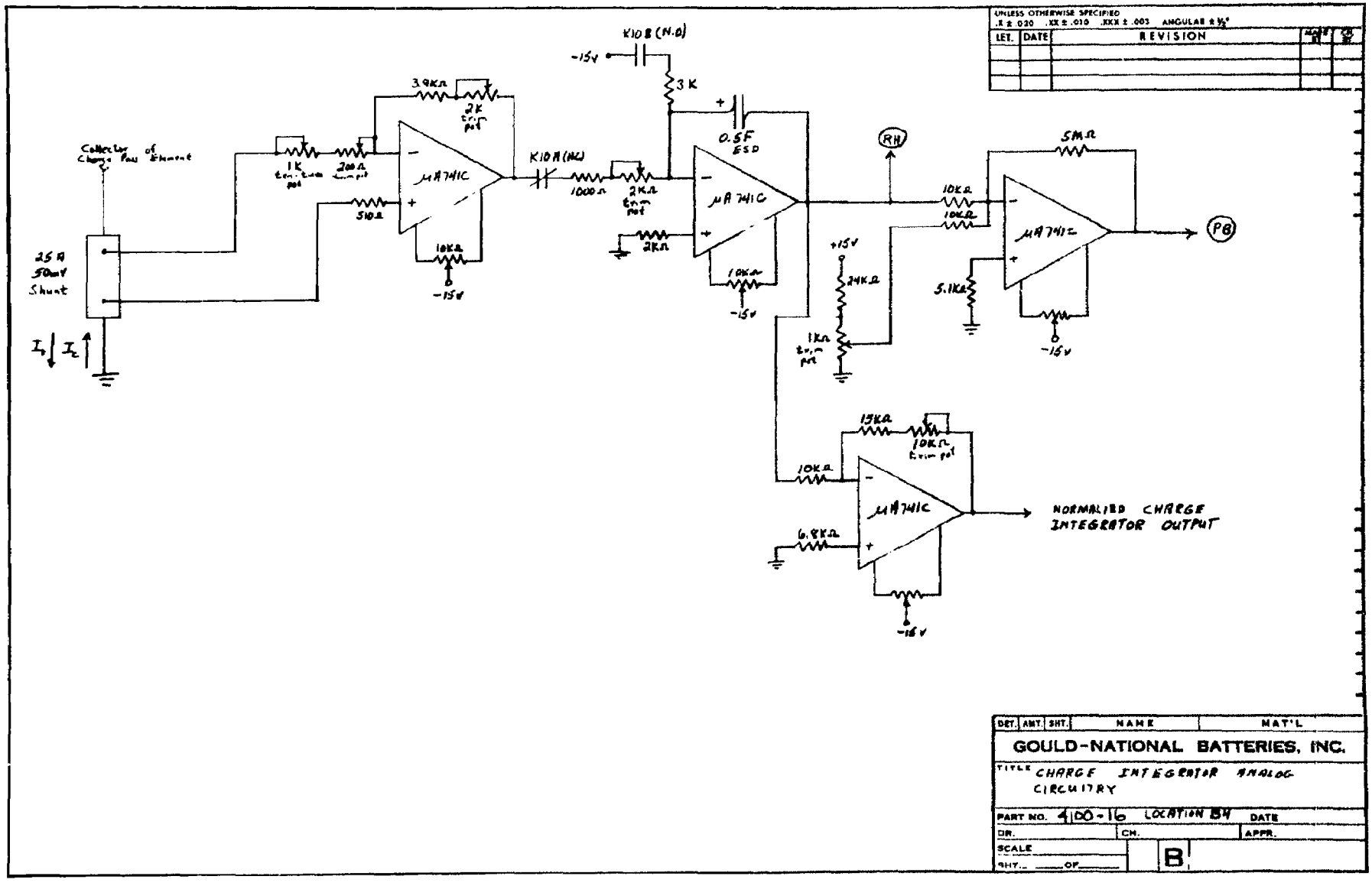
UNLESS OTHERWISE SPECIFIED
.X ± .020 .XX ± .010 .XXX ± .003 ANGULAR ± ½°
LET. DATE REVISION
Collector Charge Pins of Element
25 A 50mV Shunt
I_1 I_2
1K trim pot
200Ω trim pot
510Ω
3.9KΩ
2K trim pot
10KΩ
-15V
μA741C
K10B (N.O)
K10A (NC)
1000Ω
2KΩ trim pot
2KΩ
-15V
3K
0.5F ESD
10KΩ
-15V
RH
+15V
24KΩ
1KΩ trim pot
10KΩ
10KΩ
5MΩ
5.1KΩ
-15V
P8
15KΩ
10KΩ trim pot
10KΩ
6.8KΩ
-15V
NORMALIZED CHARGE INTEGRATOR OUTPUT
DET. AMT. SHT. NAME MAT'L
GOULD-NATIONAL BATTERIES, INC.
TITLE CHARGE INTEGRATOR ANALOG CIRCUITRY
PART NO. 4100-16 LOCATION B4 DATE
DR. CH. APPR.
SCALE
SHT. OF
B

UNLESS OTHERWISE SPECIFIED
.X ± .020 .XX ± .010 .XXX ± .003 ANGULAR ± ½°

LET.	DATE	REVISION	MADE	CK

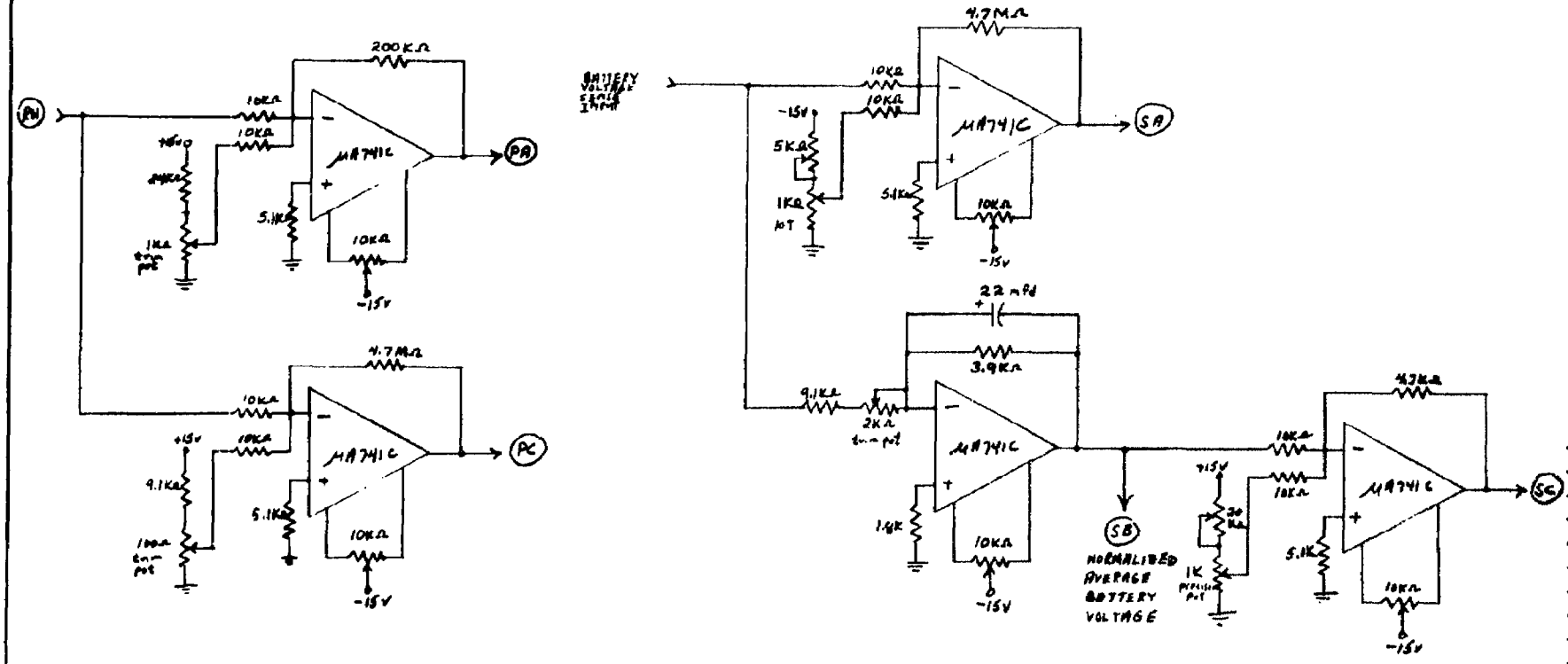

DET.	ANT.	SHT.	NAME	MAT'L

GOULD-NATIONAL BATTERIES, INC.

TITLE ANALOG CIRCUITRY - CHARGE INTEGRATOR LIMITS & VOLTAGE SENSOR OUTPUT

PART NO. 4100-17 LOCATION B3 DATE

DR. CH. APPR.

SCALE

SHT. ___ OF ___

B

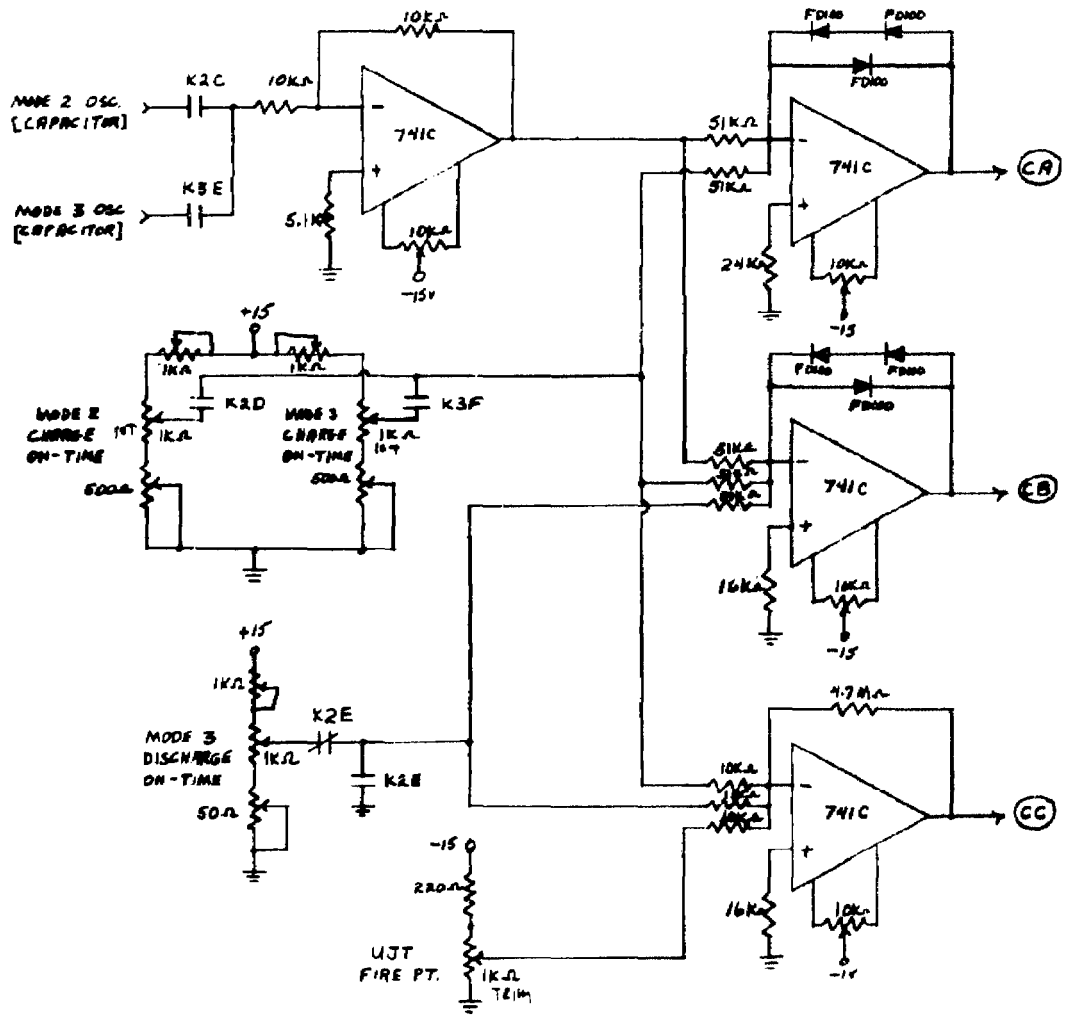

UNLESS OTHERWISE SPECIFIED
.X ± .030 .XX ± .010 .XXX ± .003 ANGULAR ± ½°

LET.	DATE	REVISION		

DET. | ANT. | SHT. | NAME | MAT'L

GOULD-NATIONAL BATTERIES, INC.

TITLE MODES 2 & 3 TIMING CONTROLS

PART NO. 4100-18 LOCATION B8 DATE

DR. CH. APPR.

SCALE

SHT. ___ OF ___

B

UNLESS OTHERWISE SPECIFIED
.X ± .020 .XX ± .010 .XXX ± .003 ANGULAR ± ½°

LET.	DATE	REVISION	LTR	CK

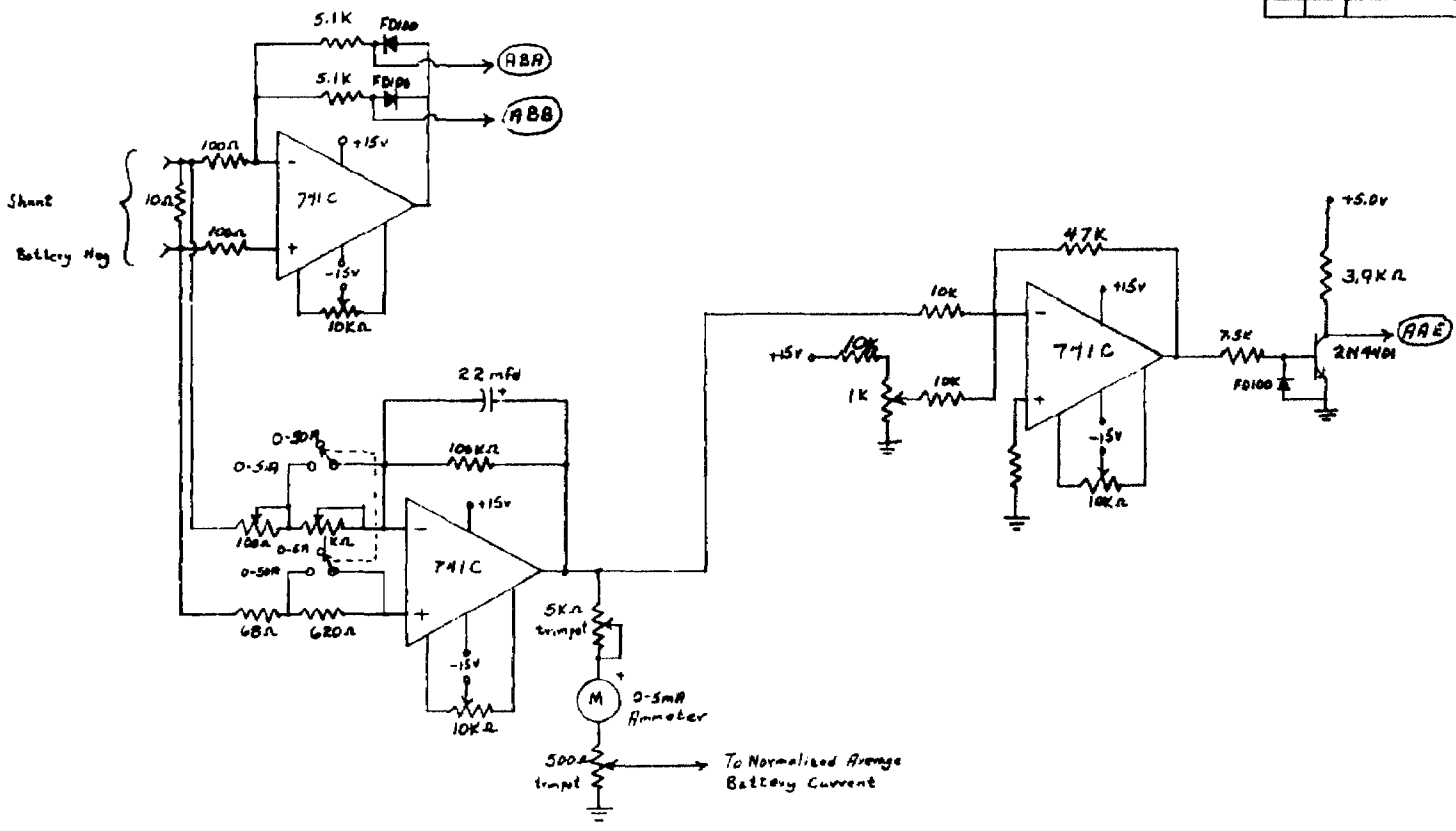

DET	AMT.	SHT.	NAME	MAT'L

GOULD-NATIONAL BATTERIES, INC.

TITLE
CURRENT SENSOR ANALOG AMPLIFIERS – SECTION 1

PART NO. 4100-19 LOCATION B6 DATE

DR. CH. APPR.

SCALE

SHT. ___ OF ___

B

UNLESS OTHERWISE SPECIFIED
.X ± .020 .XX ± .010 .XXX ± .003 ANGULAR ± ½°

LET.	DATE	REVISION		

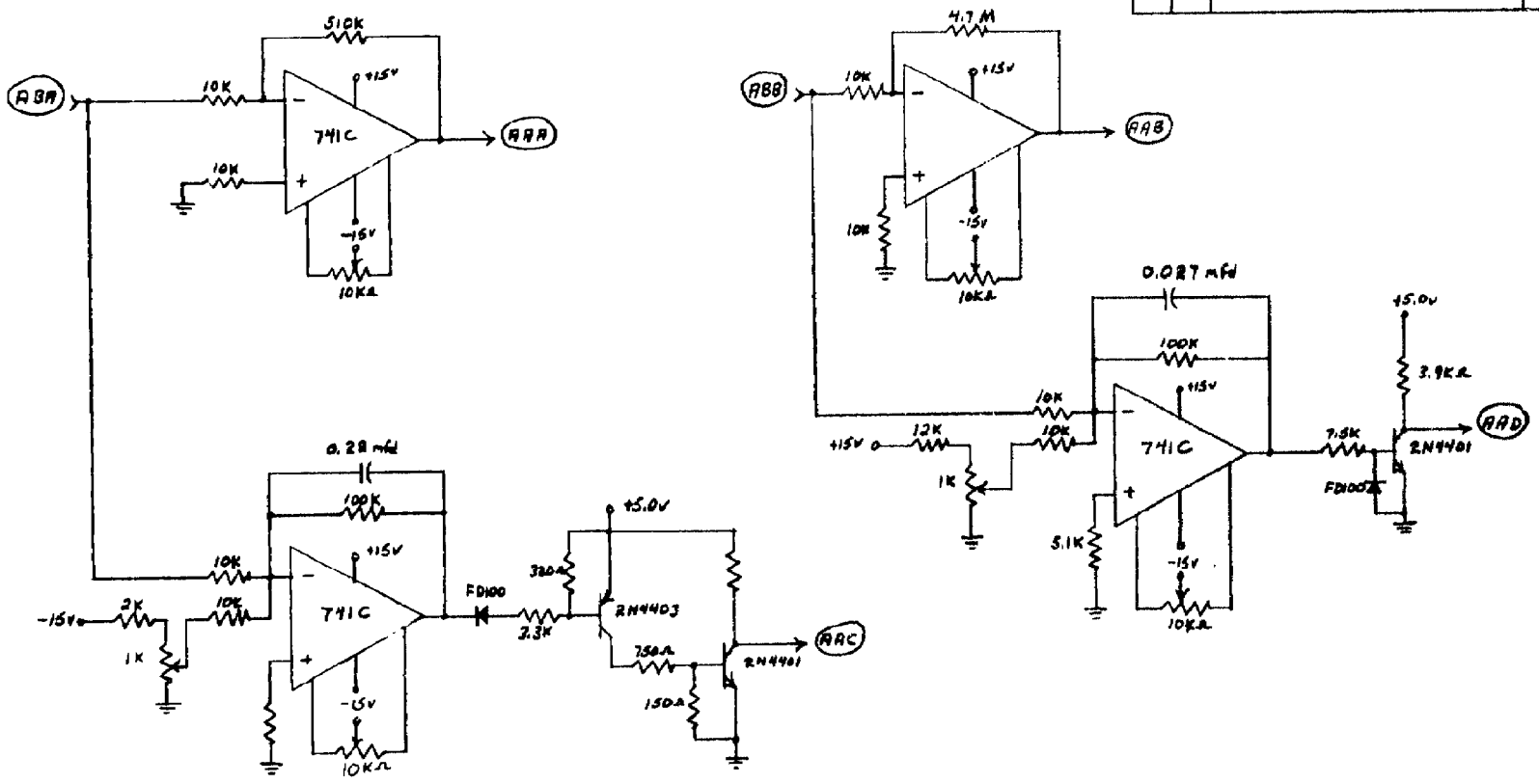

DET.	ART.	SHT.	NAME	MAT'L

GOULD-NATIONAL BATTERIES, INC.

TITLE CURRENT SENSOR ANALOG AMPLIFIER — SECTION 2

PART NO. 4100-20 LOCATION B7 DATE

DR. CH. APPR.

SCALE

SHT. ___ OF ___

B

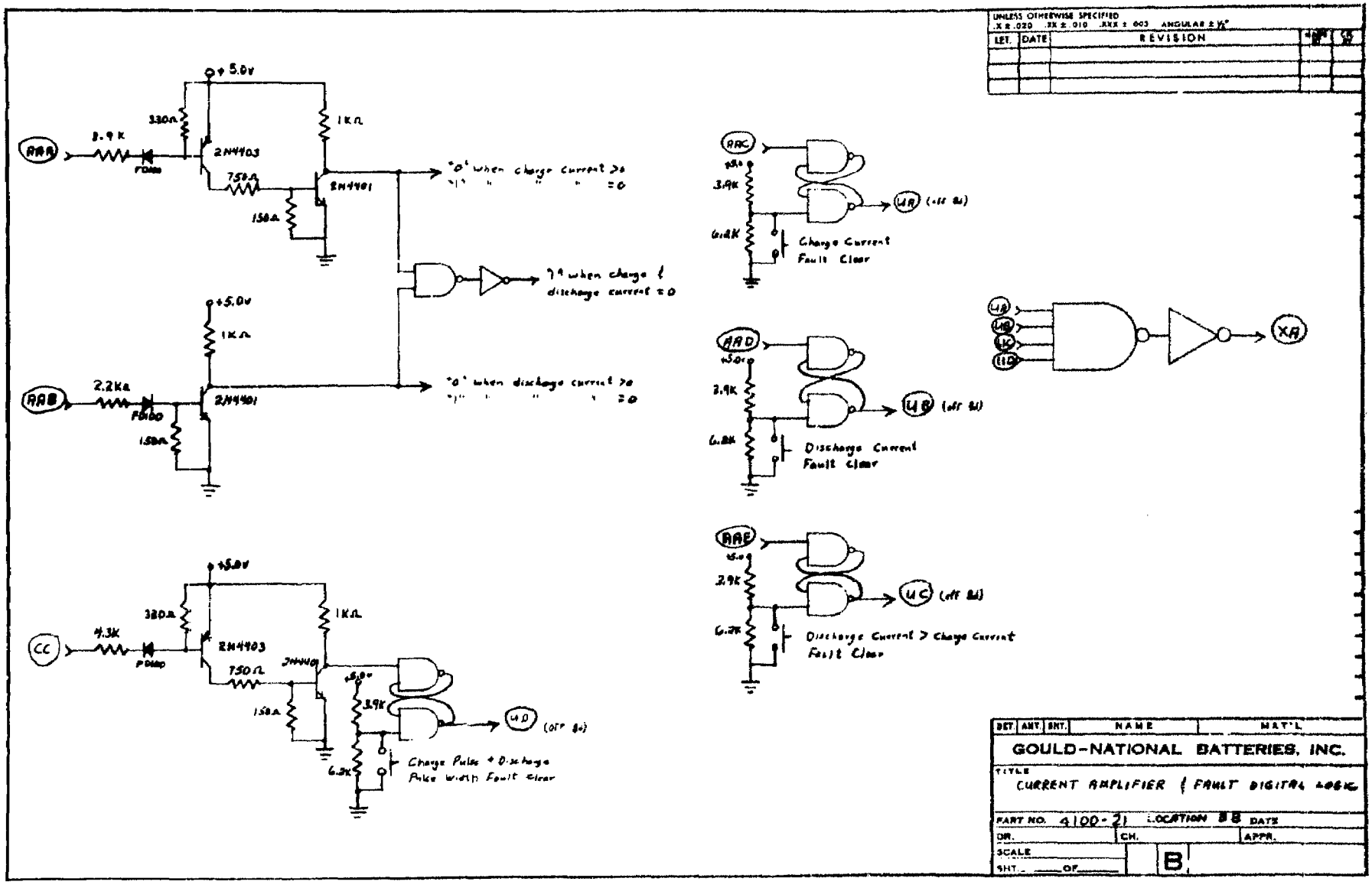
UNLESS OTHERWISE SPECIFIED
.X ± .020 .XX ± .010 .XXX ± .003 ANGULAR ± ½°
LET. DATE REVISION
+5.0V
330Ω
1KΩ
AAA
3.9K
FD100
2N4403
750Ω
2N4401
150Ω
"0" when charge current > 0
"1" " " " = 0
"1" when charge & discharge current = 0
+5.0V
1KΩ
AAB
2.2KΩ
FD100
2N4401
150Ω
"0" when discharge current > 0
"1" " " " = 0
+5.0V
330Ω
1KΩ
CC
4.3K
FD100
2N4403
750Ω
2N4401
150Ω
+5.0V
3.9K
6.2K
UD (off 8a)
Charge Pulse + Discharge Pulse width Fault Clear
AAC
+5.0
3.9K
6.2K
UA (off 8a)
Charge Current Fault Clear
AAD
+5.0V
3.9K
6.2K
UB (off 8a)
Discharge Current Fault Clear
AAE
+5.0
3.9K
6.2K
UC (off 8a)
Discharge Current > Charge Current Fault Clear
UA
UB
UC
UD
XA
DET. ANT. SHT. NAME MAT'L
GOULD-NATIONAL BATTERIES, INC.
TITLE
CURRENT AMPLIFIER & FAULT DIGITAL LOGIC
PART NO. 4100-21 LOCATION 8B DATE
DR. CH. APPR.
SCALE
SHT. OF
B

UNLESS OTHERWISE SPECIFIED
.X ± .030 .XX ± .010 .XXX ± .003 ANGULAR ± ½°

LET.	DATE	REVISION	MADE BY	CK BY

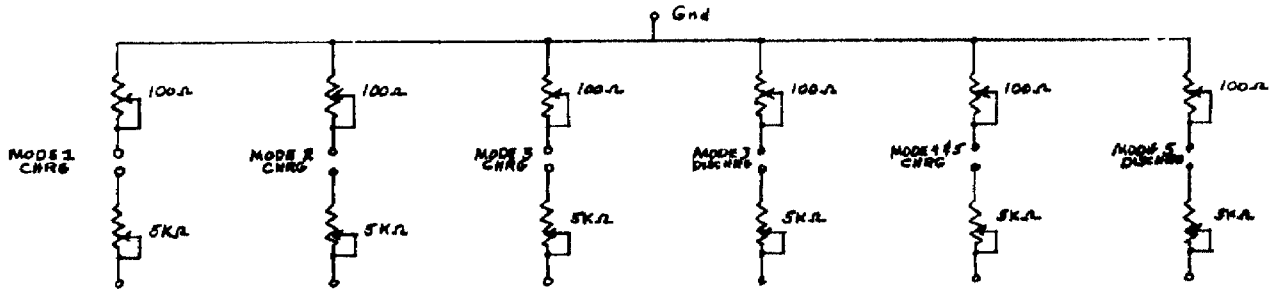

DET.	ASST.	SHT.	NAME	MAT'L.

GOULD-NATIONAL BATTERIES, INC.

TITLE
PULSE AMPLITUDE CONTROL ADJUSTS

PART NO. 4100-2B LOCATION A 16 DATE

DR. CH. APPR.

SCALE

SHT. ___ OF ___ B

UNLESS OTHERWISE SPECIFIED
.X ± .020 .XX ± .010 .XXX ± .003 ANGULAR ± ½°

LET.	DATE	REVISION		

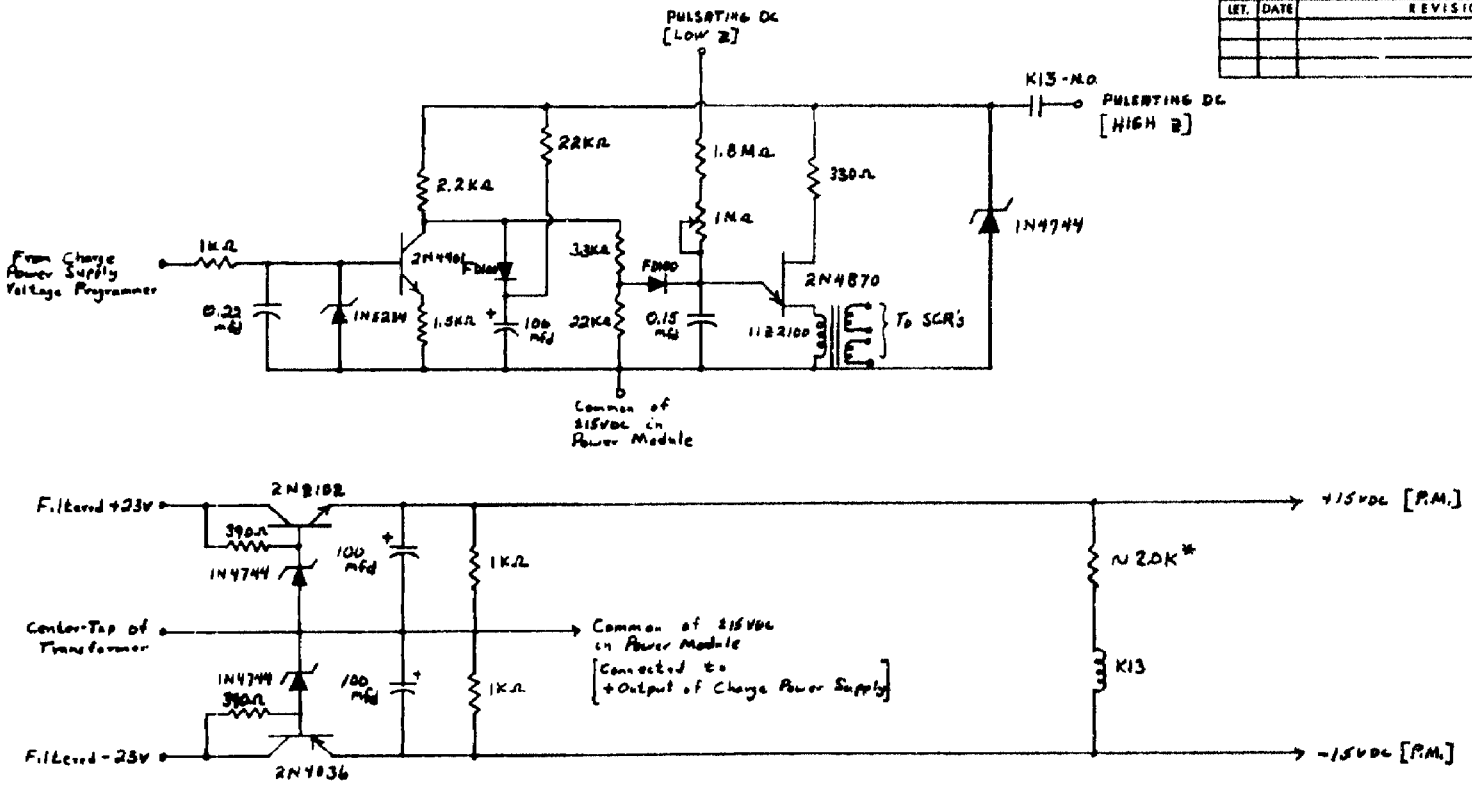

*ADJ. FOR 17V DROP-OUT OF K13

DET.	ANT.	SHT.	NAME	MAT'L

GOULD-NATIONAL BATTERIES, INC.

TITLE ±15VDC [P.M.] REGULATORS and SCR TRIGGER CIRCUITRY

PART NO. 4100-23 LOCATION P1 DATE

DR. CK. APPR.

SCALE

SHT. ___ OF ___

B

UNLESS OTHERWISE SPECIFIED
.X ± .030 .XX ± .010 .XXX ± .003 ANGULAR ± ½°

LET.	DATE	REVISION	APP'D	CK'D

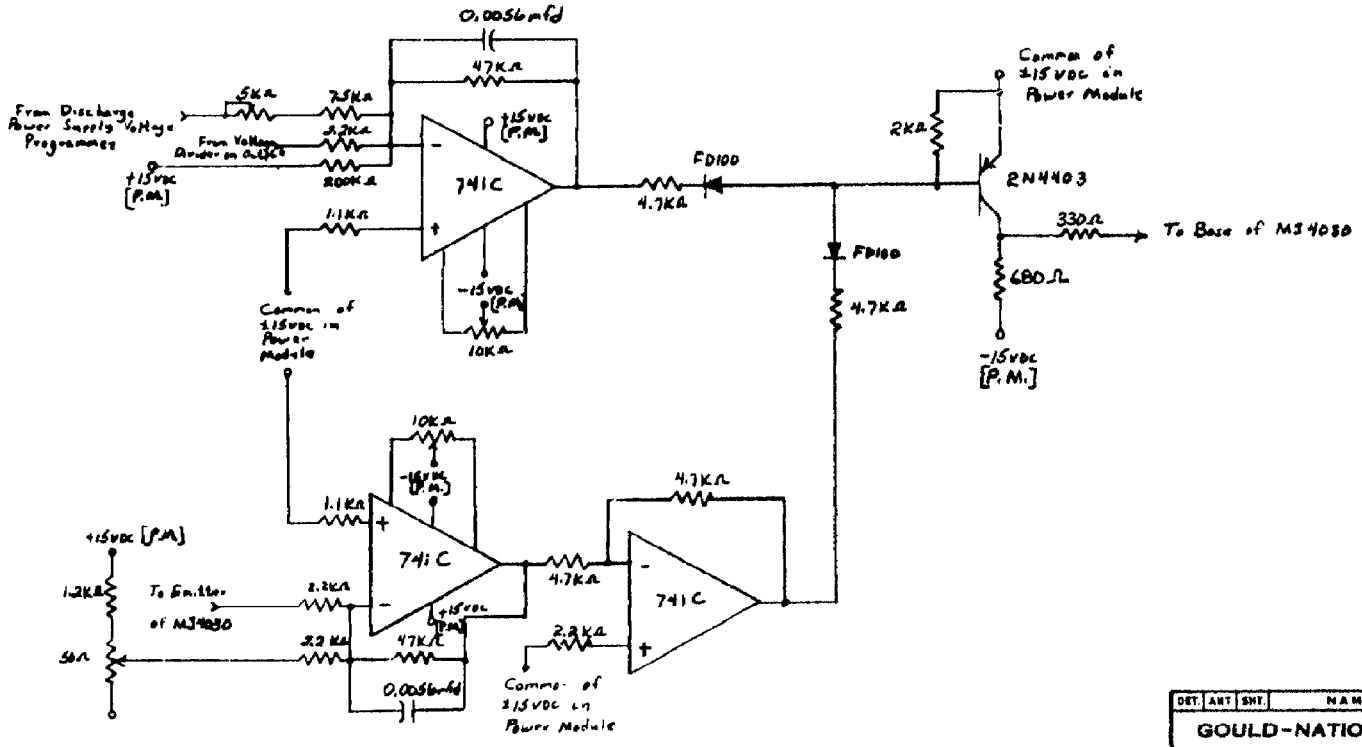

DET.	ART.	SHT.	NAME	MAT'L

GOULD-NATIONAL BATTERIES, INC.

TITLE
DISCHARGE POWER SUPPLY LOGIC and REGULATOR DRIVER

PART NO. 4100-26 LOCATION P5 DATE

DR. CH. APPR.

SCALE

SHT. ___ OF ___

B

UNLESS OTHERWISE SPECIFIED
.X ± .020 .XX ± .010 .XXX ± .005 ANGULAR ± ½°

LET.	DATE	REVISION	APPR.	CK. BY

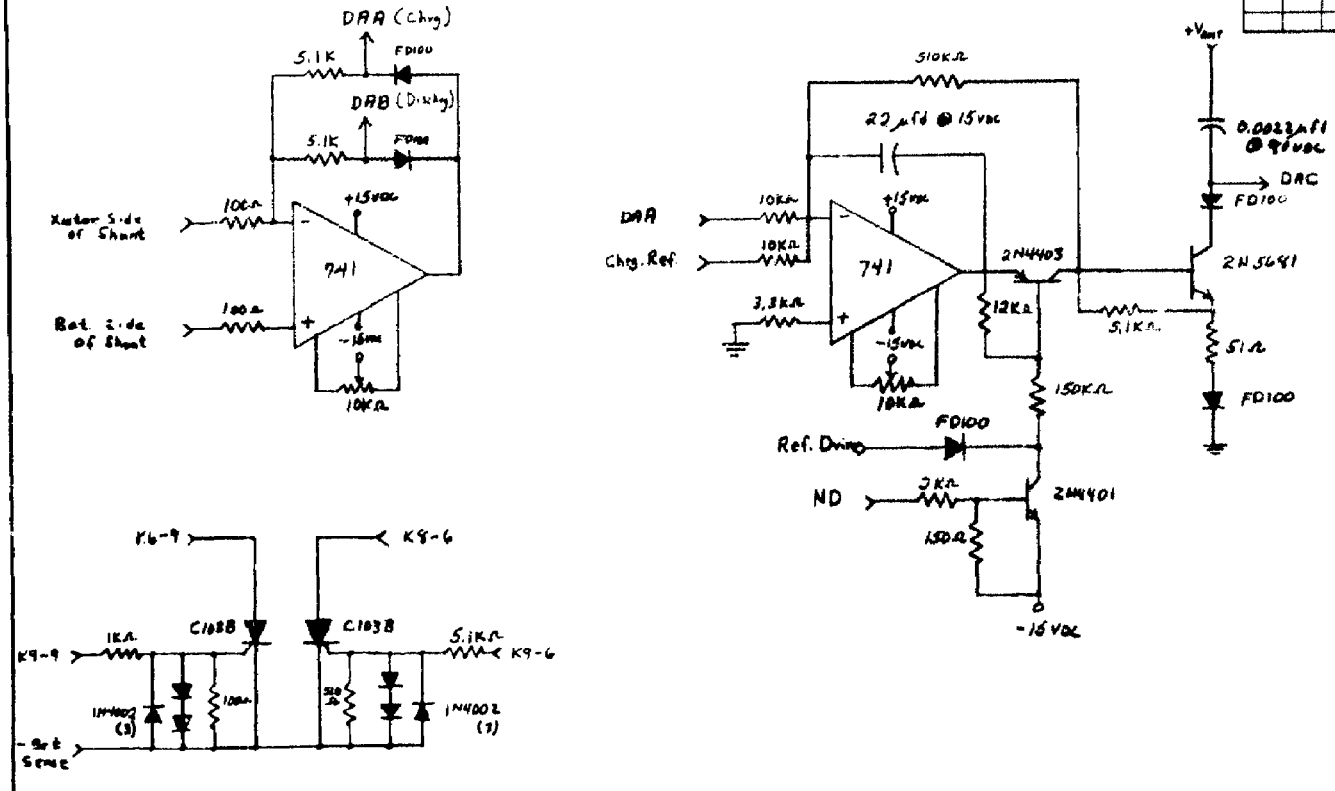

DET.	ANT	SHT	NAME	MAT'L

GOULD-NATIONAL BATTERIES, INC.

TITLE CHARGE PULSE AMPLITUDE CONTROL LOOP & START RELAY LOGIC

PART NO. 4100-27 LOCATION P3 DATE

DR. CH. APPR.

SCALE

SHT. OF B

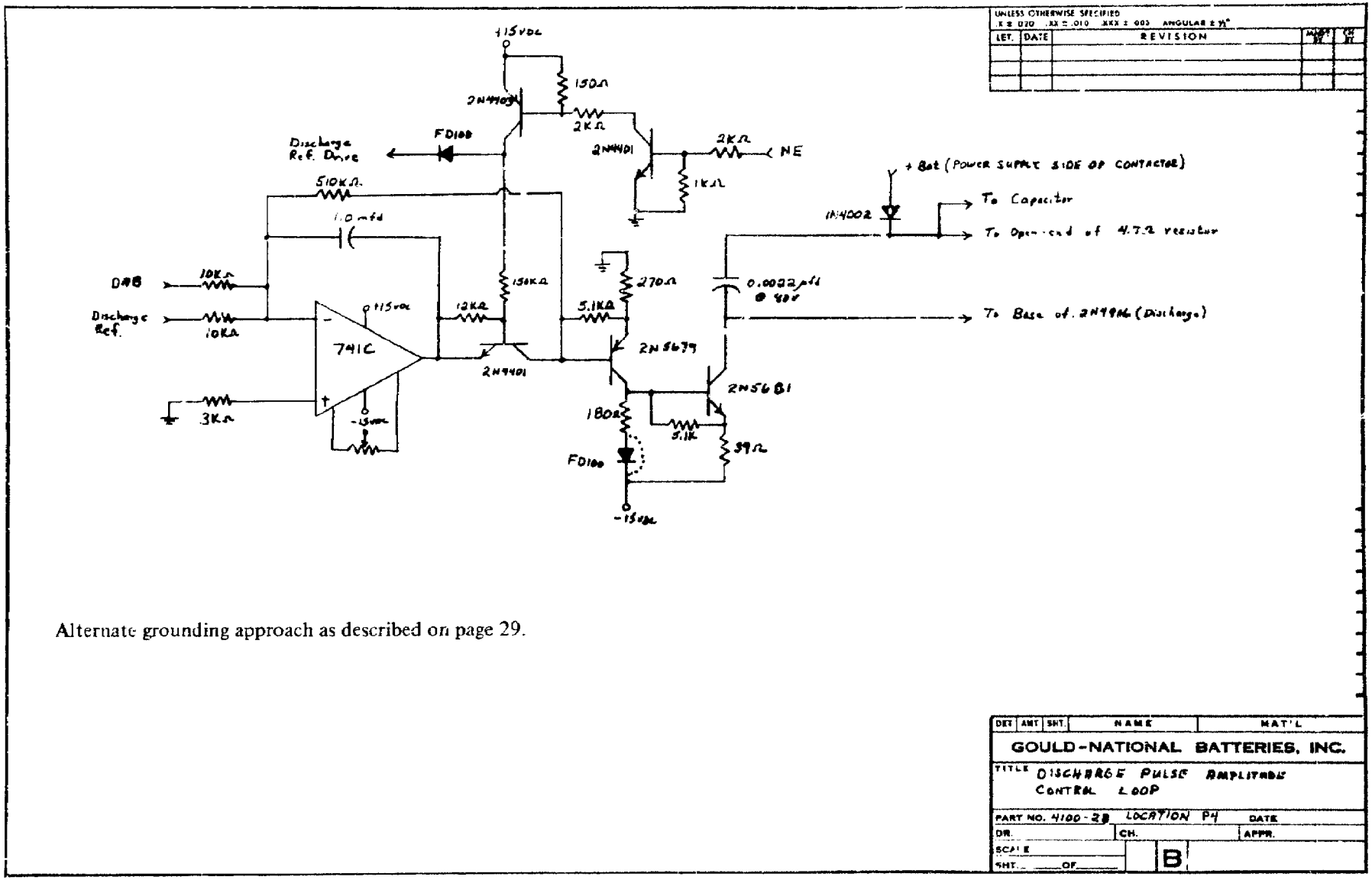

Alternate grounding approach as described on page 29.

UNLESS OTHERWISE SPECIFIED
.X ± .020 .XX ± .010 .XXX ± .003 ANGULAR ± ½°

LET.	DATE	REVISION		

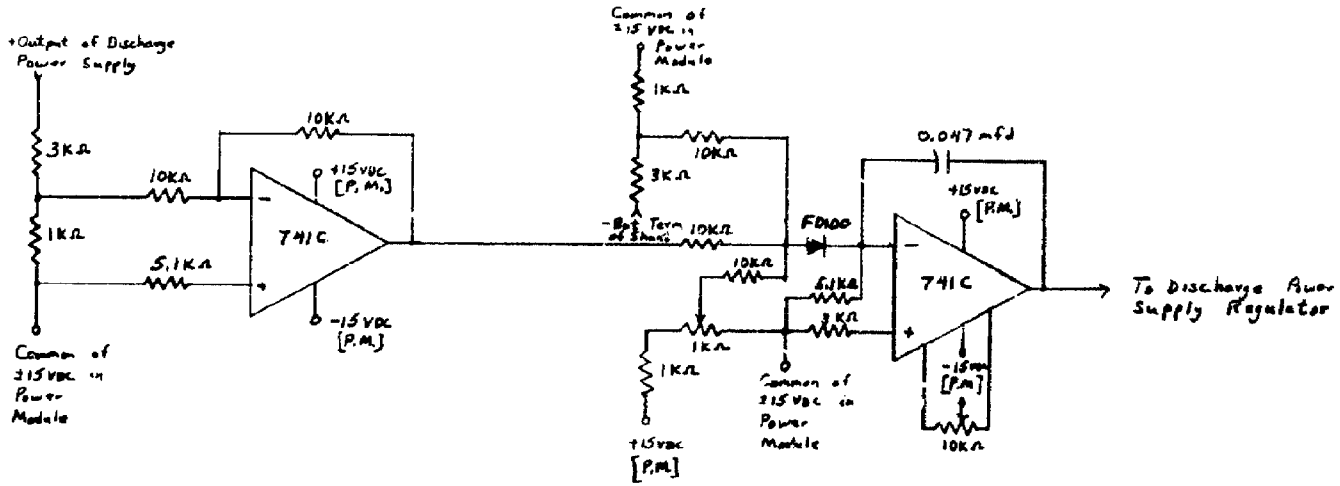

DET.	AMT.	SHT.	NAME	MAT'L

GOULD-NATIONAL BATTERIES, INC.

TITLE
DISCHARGE POWER SUPPLY
VOLTAGE PROGRAMMER

PART NO. 4100-29 LOCATION P6 DATE

DR. CH. APPR.

SCALE

SHT. ___ OF ___

B

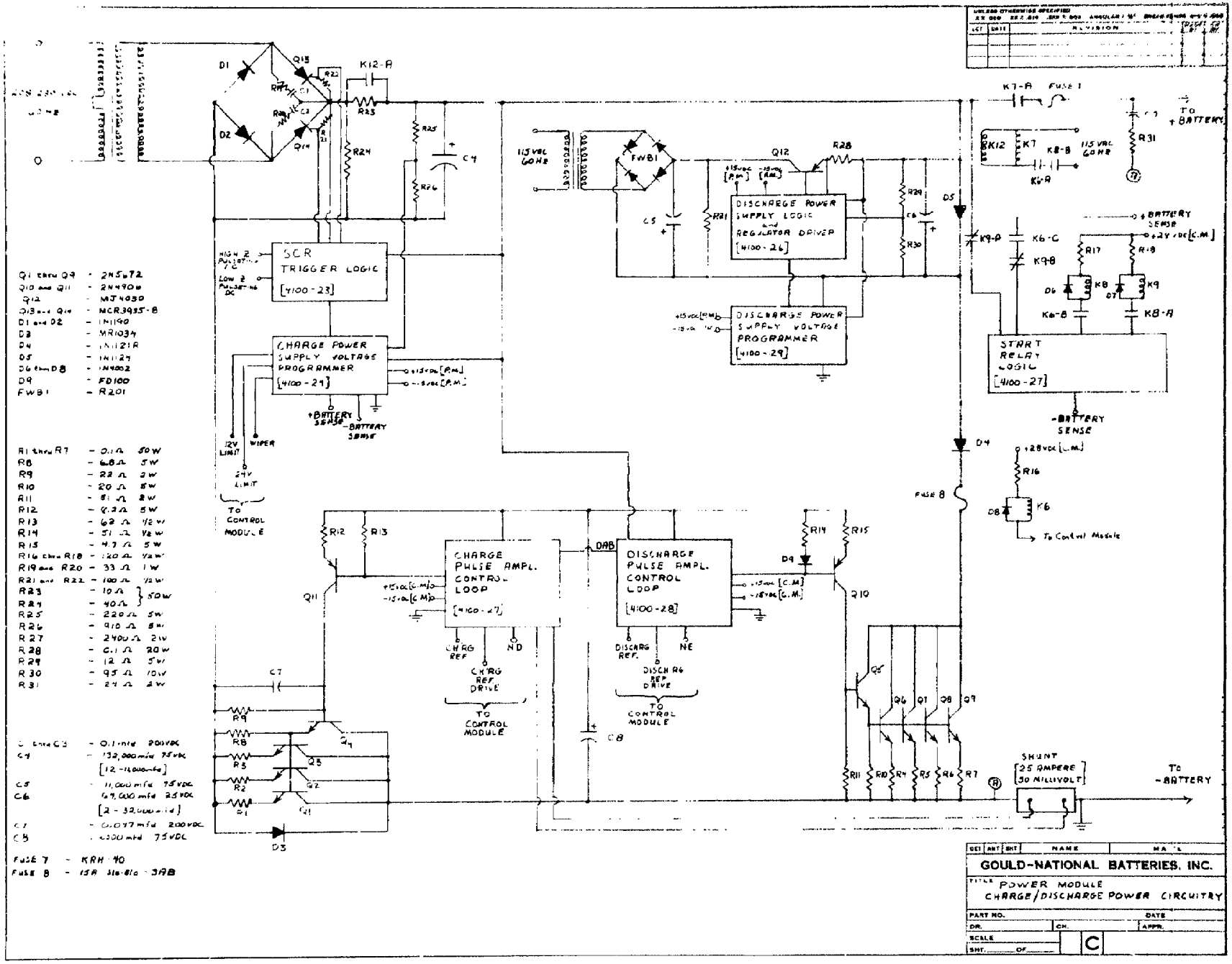
SCR TRIGGER LOGIC [4100-23]
CHARGE POWER SUPPLY VOLTAGE PROGRAMMER [4100-24]
DISCHARGE POWER SUPPLY LOGIC and REGULATOR DRIVER [4100-26]
DISCHARGE POWER SUPPLY VOLTAGE PROGRAMMER [4100-29]
START RELAY LOGIC [4100-27]
CHARGE PULSE AMPL. CONTROL LOOP [4100-27]
DISCHARGE PULSE AMPL. CONTROL LOOP [4100-28]
TO CONTROL MODULE
SHUNT 25 AMPERE 50 MILLIVOLT
TO + BATTERY
TO - BATTERY
GOULD-NATIONAL BATTERIES, INC.
POWER MODULE
CHARGE/DISCHARGE POWER CIRCUITRY

UNLESS OTHERWISE SPECIFIED
.X ± .030 .XX ± .010 .XXX ± .003 ANGULAR ± ½°

LET.	DATE	REVISION	APPR.	CK.

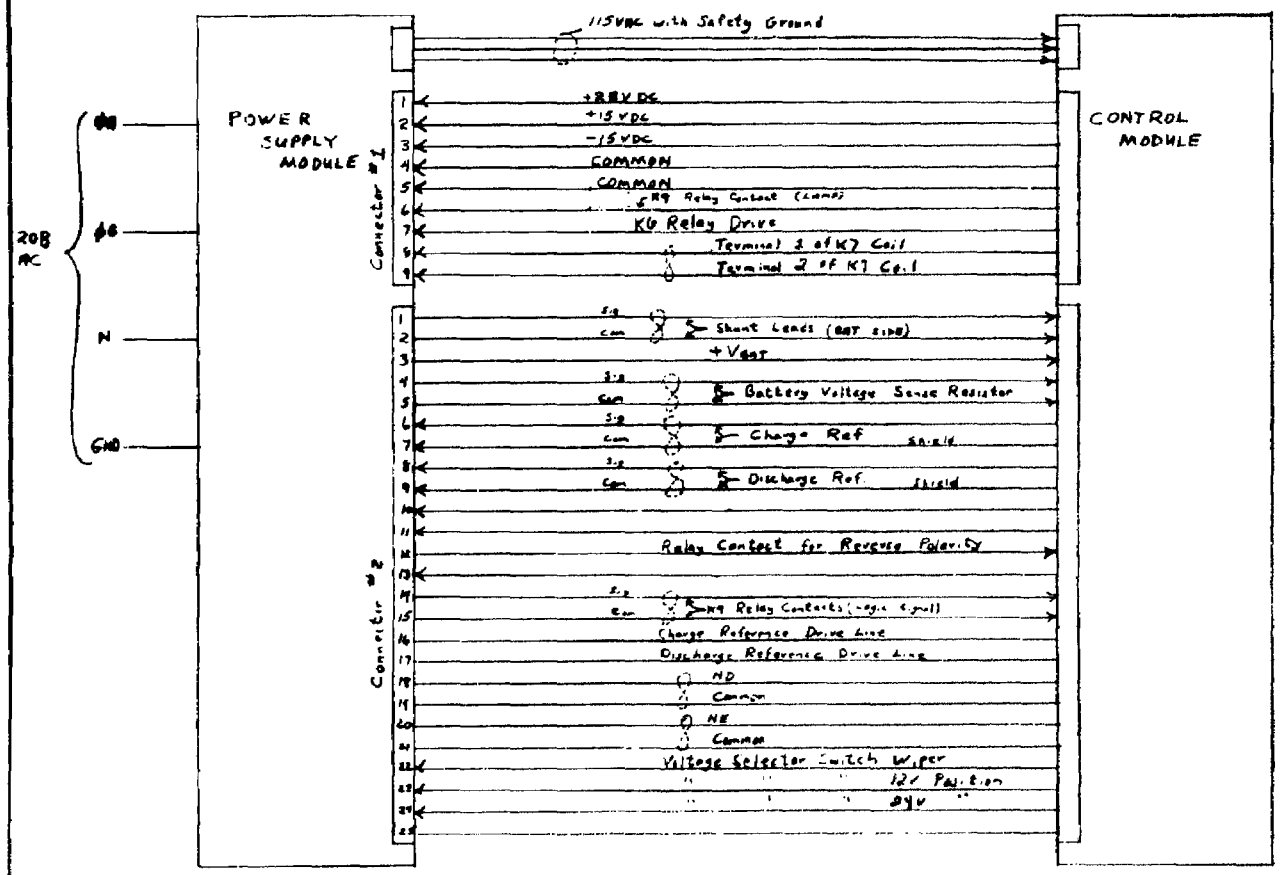

DET.	ART.	SHT.	NAME	MAT'L

GOULD-NATIONAL BATTERIES, INC.

TITLE CABLING DIAGRAM

PART NO. DATE

DR. CH. APPR.

SCALE

SHT. ___ OF ___

B

Unclassified

Security Classification

DOCUMENT CONTROL DATA - R & D

(Security classification of title, body of abstract and indexing annotation must be entered when the overall report is classified)

1. ORIGINATING ACTIVITY *(Corporate author)* Gould Inc., Gould Laboratories Energy Research 1110 Hwy 110, Mendota Heights, MN 55118	2a. REPORT SECURITY CLASSIFICATION Unclassified 2b. GROUP

3. REPORT TITLE

Rapid Charger For Maintenance-Free Batteries

4. DESCRIPTIVE NOTES *(Type of report and inclusive dates)*

Semi-Annual (1 May 1971 – 31 December 1971)

5. AUTHOR(S) *(First name, middle initial, last name)*

John A. Herrmann

6. REPORT DATE March 1973	7a. TOTAL NO. OF PAGES 71	7b. NO. OF REFS None
8a. CONTRACT OR GRANT NO. DAAB07-71-C-0209 b. PROJECT NO. 1TO 62119 A 053 c. Task No. –05 d. Subtask No. –27	9a. ORIGINATOR'S REPORT NUMBER(S) ECOM-0209-1 9b. OTHER REPORT NO(S) *(Any other numbers that may be assigned this report)*	

10. DISTRIBUTION STATEMENT

Distribution limited to U.S. Government agencies only; Test and Evaluation; 12 March 1973. Other requests for this document must be referred to Commanding General, U.S. Army Electronics Command, ATTN: AMSEL-TL-PE, Fort Monmouth, New Jersey 07703

11. SUPPLEMENTARY NOTES	12. SPONSORING MILITARY ACTIVITY U.S. Army Electronics Command Fort Monmouth, New Jersey 07703 (AMSEL-TL-PE)

13. ABSTRACT

The purpose of this program was to evaluate various charging approaches for rapid charging sealed nickel-cadmium, vented nickel-cadmium, and silver zinc-oxide batteries. A programmable charger was to be designed, manufactured and used as a tool during the evaluation of the various charging approaches.

To accomplish the objectives, a paper design and breadboard of the circuitry for the programmable charger was initiated at the beginning of the contract. Throughout the first nine months of the program, the charger was designed, breadboard portions were evaluated, and final hardware built. Upon the completion of initial hardware, the system was checked out and problem areas corrected. The charger was designed to have five basic operating modes with each having necessary controls for varying charge current, discharge current, charge frequency, and mode selection.

As of the time period covered by this report, no testing of charge approaches has started; therefore, the only results which can be stated are that a working programmable charger was designed, fabricated, and tested.

DD FORM 1473

Security Classification

Unclassified
Security Classification

KEY WORDS	LINK A		LINK B		LINK C	
	ROLE	WT	ROLE	WT	ROLE	WT
Programmable Rapid Charger						
Battery Charging						
Pulse Charging						
Pulse Charging with Discharge Pulser						
Reflex charging						

Security Classification