AD-785 241

DEVELOPMENT OF INSTRUMENTATION TO MONITOR THE RADIAL DEFORMATION OF THE MEDIUM AROUND AN UNDERGROUND OPENING. PART II. LASER SYSTEM

W. J. Coleman

Battelle-Pacific Northwest Laboratories

Prepared for:

Bureau of Mines
Advanced Research Projects Agency

15 November 1973

DISTRIBUTED BY:

NTIS

National Technical Information Service
U. S. DEPARTMENT OF COMMERCE
5285 Port Royal Road, Springfield Va. 22151

AD785241

Development of Instrumentation to Monitor the Radial Deformation of the Medium Around an Underground Opening

Part II: Laser System

Final Technical Report
November 15, 1973

U.S. Bureau of Mines
Contract Number H0220028, Amendment 6

Sponsored by
Advanced Research Projects Agency
ARPA Order No. 1579, Amendment 3
Program Code 2F10

The views and conclusions contained in this document are those of the author and should not be interpreted as necessarily representing the official policies, either expressed or implied, of the Advance Research Projects Agency or the U.S. Government.

Battelle
Pacific Northwest Laboratories
Richland, Washington 99352

DISTRIBUTION STATEMENT A
Approved for public release;
Distribution Unlimited

Reproduced by
NATIONAL TECHNICAL
INFORMATION SERVICE
U.S. Department of Commerce
Springfield, VA 22151

FINAL TECHNICAL REPORT

SEPTEMBER 29, 1972 - NOVEMBER 15, 1973

ARPA Order Number: 1579,
Amendment 3

Program Code Number: 2F10

Contract Number: H0220028
Amendment 6

Principal Investigator:
W. J. Coleman

Telephone Number: (509) 946-2178

Program Manager:
D. E. Rasmussen

Telephone Number: (509) 946-2497

Name of Contractor:

Pacific Northwest Laboratories
a Division of Battelle Memorial
Institute

Short Title of Work:

Development of Instrumentation to Monitor Radial Deformation of the Medium Around an Underground Opening Part II: Laser System

Effective Date of Contract:

March 3, 1972

Contract Expiration Date:

November 15, 1973

Amount of Contract:

$77,000

This research was supported by the Advanced Research Projects Agency of the Department of Defense and was monitored by Bureau of Mines under Contract Number H0220028

CONTENTS

INTRODUCTION 1
SUMMARY. 2
DISCUSSION 5
PROTOTYPE DESIGN. 6
Prototype Description - Mechanical. 6
Stepping Motors 7
Horizontal Raster Scan 7
Vertical Raster Scan 7
Fine Resolution Scanner 8
Beam Expander and Mask. 8
Signal Reception 9
Component Mounting 9
Enclosure 9
Prototype Description - Electronics 10
Functional Description 10
Circuit Description 13
SETUP AND OPERATION. 15
Operating Instructions 15
Preliminary Setup and Calibration 17
PROTOTYPE ANALYSIS 17
FIELD DEMONSTRATION. 22
RECOMMENDED MODIFICATIONS AND UPDATING OF THE SYSTEM. 23
Possible Modifications to the Original Concept. 24
APPENDIX A - List of Illustrations for Part II - Laser System. . . . A-1
APPENDIX B - Detail Description of the Conceptual Design B-1

LIST OF FIGURES

A-1	Mechanical Design Drawing of Laser System	A-1
A-2	Mechanical Design Drawing of Laser System	A-2
A-3	Mechanical Design Drawing of Laser System	A-3
A-3a	Field Demonstration of Laser System	A-3a
A-4	Scanning Mirror Assembly.	A-4
A-5	Laser System Instrument Assembly	A-5
A-6	View of Instrument Showing Beam Expander and Chopper Assembly	A-6
A-7	End View of the Assembly.	A-7
A-8	View Showing Parts Mounted Internally in the Frame	A-8
A-9	Overall Top View	A-9
A-10	Instrument Assembly (without cover) and Electronic Control Console.	A-10
A-11	Electronic Subsystem Block Diagram	A-11
A-12	Electronic Control Console with Top Cover Removed	A-12
A-13	Electronic Control Console, Front View	A-13
A-14	Data Acquisition Waveforms for USBM Laser System.	A-14
A-15	Logic Flow Diagram for Raster Scan and Target Stop	A-15
A-16	Circuit Diagram of the Electronic Subsystem, Page 1.	A-16
A-17	Circuit Diagram of the Electronic Subsystem, Page 2.	A-17
A-18	Intensity Profile of the Image of an Edge	A-18
A-19	Diffraction Pattern from an Edge	A-19
A-20	Transition from a Fresnel to Fraunhofer Diffraction Pattern	A-19
A-21	Plot of Horizontal Step Sizes	A-20
A-22	Schematic Representation of the Theoretical Reduction and Subsequent Expansion of the Projected Beam.	A-21
B-1	Laser Beam on Target	B-3
B-2	Laser Beam on Target Being Blocked Out Vertically	B-3
B-3	Horizontal Chopping Action	B-5
B-4	Vertically Chopped Beam	B-7
B-5	The Combined, Alternating, Horizontally and Vertically Chopped Beam.	B-8
B-6	Schematic Diagram of Laser System.	B-9

DEVELOPMENT OF INSTRUMENTATION TO MONITOR RADIAL DEFORMATION
OF THE MEDIUM AROUND AN UNDERGROUND OPENING
FINAL TECHNICAL REPORT - PART II - LASER SYSTEM
SEPTEMBER 29, 1972 - NOVEMBER 15, 1973

INTRODUCTION

The objectives of this research and development program were to develop two unique types of instrumentation suitable for measuring deflection of the medium surrounding an underground opening. These two instrument systems are referred to as the "Self-Contained System" and the "Laser System."

We are at the end of the second year of a planned 3-year research and development effort. Work performed during the first year is described in the semiannual and annual reports dated August 30, 1971 and March 9, 1972, (No. AD-752072) respectively. Work performed during the first half of the second year is reported in the semiannual report dated September 29, 1972 (No. AD-753274).

This report concentrates on the work performed during the last half of the second contract year and includes a summary of work accomplished followed by detailed technical discussions presented in Part One entitled "Self-Contained System" and Part Two "Laser System."

Work performed under the contract and directed toward self-contained system development resulted in two prototypes. The first prototype, which used a punched paper tape recorder to store measurement data, was developed during the first contract year and evaluated in the laboratory and underground during the first part of the second contract year. Because of advancing technology related to programmable, read-only solid-state memories, the planned development work was modified about midyear and a self-contained system, using this new technology was developed during the last half of the contract year. This work is described in detail in Part One of the report.

Work performed under the contract and directed toward Laser System development results in design and fabrication of a prototype instrument system and evaluation of the system in the laboratory and at an underground site near Spokane, Washington. Laser System concept definition was completed during the first contract year and is discussed in the first annual report. Fabrication and evaluation of a prototype was performed during the second year and is covered in Part Two of this report.

The instrumentation developed provides unique tools for the study of stability of underground openings particularly where deformation measurements are required very close to a drilled or blasted opening and where extended periods of automatic data recording are needed.

SUMMARY

During the first contract year, we completed selection and evaluation of the concept to be used in the Laser System. During the current contract year we designed and fabricated a first prototype, then evaluated this prototype in the laboratory, and demonstrated it in an underground location near Spokane, Washington. The following summarizes work described in Part Two (Laser System) of this report; summary of the Self-Contained System work is contained in Part One.

The Laser System employs a coarse and fine raster scanning concept to measure relative motion of passive targets. The course scan locates a target within a 1-in. square (approximate) field of view; the fine scan locates the target's position within the 1-in. square. The concept, in theory, should have very good accuracy and repeatability but depends upon the capabilities of the instrument components. Details of the concept are contained in Appendix B.

During the current year, we designed and fabricated an initial prototype of the Laser System. Since capabilities of the total system depend upon the repeatability of the coarse raster scan, we spent considerable effort in providing highly repeatable scanning mechanisms. The ball screw type vertical scan drive, which has been evaluated during the first year's concept evaluation work, was retained since it appeared to come close to the requirements (this conclusion was later shown to be erroneous; see text). A worm-gear drive was used for the horizontal scan drive.

The fine raster scan is provided by chopping (interrupting) the light beam, first by passing a vane vertically through the beam, then horizontally through the beam, and repeating this sequence rapidly and continuously. Originally, we thought both horizontal and vertical fine scanning could occur simultaneously, but at different rates, with the reflected light signal being converted to an electrical signal, and then horizontal and vertical signals separated by filters. This proved impractical due to harmonics of one signal appearing in the other.

Mounts for the various optical components were designed, fabricated and installed on the aluminum box section main frame. Each mount was provided with a means of adjustment so that optical alignment could be accomplished. After gaining experience with the prototype, most of the mounts could be beneficially redesigned.

The electronic portions of the prototype were designed, breadboarded, and assembled into the prototype system. Incorporated into the electronic sub-system was the capability to control the horizontal and vertical course scan stepping motors and to receive, process, and display the light signal from the targets. The capability of storing target data on tape for subsequent computer processing, however, was to be incorporated later.

Laboratory evaluation of the prototype revealed several deficiencies in the system involving, primarily, the mechanical components and to a lesser

extent the electronic sub-system. The concept, however, is workable and was demonstrated by the prototype. Redesign of parts of the system, considering problems discovered in the first prototype, would result in a much more effective second generation prototype. This should be done before any extensive use underground is contemplated.

DISCUSSION

The objective of this effort was to design an electro-optical system that could monitor the displacement of up to 50 targets attached to the wall, roof, or back of underground openings. The targets could be placed behind an advancing face or entry (either tunnel or shaft boring machine or conventional drill and blast) to provide closure or radial deflection data of the opening and permit timely decisions on opening stability and support requirements. The design goals for the system were:

- Develop an electro-optics system to monitor target positions to an accuracy of 0.015 in. at a distance of 300 ft.
- Total time to resolve the displacement of 50 targets should be less than 5 min. Cycle could then be repeated.
- Locate targets 50 to 300 ft in front of and behind the electro-optical scanner.
- Locate the targets in an 8- by 10- degree field of view as seen from the scanner.
- Use passive targets requiring no power and that are relatively cheap and maintenance-free.
- The output of the scanner which indicates the location of the targets to be computer-compatible.

The program was divided into three phases. The first phase was to develop the concept of a system that would satisfy the above requirements and demonstrate its feasibility. The first-year final report describes the results of that phase. The second phase was to fabricate, evaluate, and demonstrate a prototype of the system as conceived in the first phase. This phase was performed in the second year and this report describes the results of that work. For continuity, all illustrations referred to in the text are listed in Appendix A. A detailed description of the conceptual design with associated illustrations is included in Appendix B.

PROTOTYPE DESIGN

The design of the prototype, (shown schematically in Figure B-6) was based on the feasibility study performed in the first contract year. The system consists of a coarse and fine resolution scanner. The first scanner is a raster scanner which scans a 1-in. square beam over a field of view about 10 degrees wide and 8 degrees high. The raster scan is produced by two stepping motors which rotate a mirror in two orthogonal directions. One motor (Figure A-5, part C) produces a vertical scan and the other motor (Figure A-5, part A) produces a horizontal scan. By knowing the size of each step and the number of steps scanned in both directions it is possible to determine the location of the 1-in. square beam by counting steps on each stepping motor. When the square beam strikes a target such as a retro-reflector with a 1/4-in. square mask, the reflected beam is received and processed by the instrument and interrupts the raster scan. The step numbers are displayed on the display panel. Two things are now determined: (1) the location of the 1-in. square beam and (2) that there is a target somewhere in the 1-in. square.

To determine the accurate location of the target within the 1-in. square, a chopper type scanner (Figure A-6, part G) was devised; a detailed description of this concept is given in Appendix B. By measuring electronic delays of the projected chopper blades at the location of the targets, ±0.005 in. displacements (with respect to the beam position) were detected in both the horizontal and vertical directions.

PROTOTYPE DESCRIPTION - MECHANICAL

Appendix A contains three mechanical drawings (Figures A-1 through A-3) which present, with minimum detail, the scanner system. These drawings differ from the prototype in some aspects which are noted by "not as built." A complete set of corrected and detailed drawings are not available for the prototype since we normally produce such drawings only when prototype development is complete.

The mechanical description is most easily presented by referring to the photographs (Figures A-4 through A-10) and to the schematic (Figure B-6). In the photos each part is always referred to by the same letter; in other words the horizontal stepping motor will always be referred to as Part A in whatever photo it is identified. In the written material we may, however, refer to only one drawing or photo rather than to each one in which the component appears.

Stepping Motors

Two stepping motors are used in the prototype, one to drive the horizontal scan and one to drive the vertical scan. The motors used are United Shoe Machinery Type HDM-150-800-4. These motors have 800 steps per revolution (equivalent to 0.45 degrees per step) and have a maximum instantaneous start/stop rate of 1500 pulses per second.

Horizontal Raster Scan

The horizontal scan stepping motor (Figure A-5, Part A) is connected to a worm gear which drives a worm wheel directly connected to the scanning mirror assembly (Figure A-5, Part B). The worm - wormwheel gear ratio is 44 to 1, thus the scanning mirror assembly rotates about a vertical axis 36.8 arc seconds for each step of the motor. At 300 ft from the mirror the motion of the light beam produced by one step on the motor is 0.68 in. Accuracy and repeatability of the drive (directly related to the capabilities of the instrument) are discussed later.

Vertical Raster Scan

The vertical scan stepping motor (Figure A-5, Part C) is direct coupled to a ball screw (Figure A-4, Part D). The screw, which is 0.630 in. nominal diameter, has a thread pitch of 0.200 in. (or 5 threads/in.). The screw selected is a common rolled thread screw since we were not concerned about overall accuracy of the screw but only the repeatability (change in target location rather than absolute position). The accuracy of the overall vertical scan system is discussed later. The ball screw nut is attached to the mirror (Figure A-4, Part E) by thin metal strips (Figure A-4, Part F) connected to two arms extending from the back side of the mirror mount. Linear motion of the ball screw nut is thereby converted to angular motion of the

mirror about a horizontal axis. Each step of the vertical scanning motor is equivalent to a 0.900-in. movement of the light beam at 300 ft. (Each step produces 0.200/800-in. movement of the ball nut; the mirror arms are 2 in. long; angular movement of the mirror causes twice the movement in the reflected beam). All the vertical scanning components are attached to and move with the scanning mirror assembly.

Fine Resolution Scanner

The fine resolution scanner consists of a cylindrical chopper, a driving motor, mirrors and beam splitters, and mounts. How these components work together to produce the fine resolution scan is described in Appendix B.

The cylindrical chopper (Figure A-6, Part G) is shown schematically in Figure B-6. It is mounted inside the chopper assembly (Figure A-6, Part H) and direct-coupled to the drive motor (Figure A-8, Part I). The motor is a synchronous type, operating at 3600 rpm. The chopper has two rows of slots around its circumference; each row consisting of six, 1/4 in. wide slots. One row produces the horizontal scan and the other row the vertical scan. The chopper interrupts the light beam 360 times each second $(\frac{3600}{60} \times 6)$.

A beam splitter and mirror are mounted on a non-rotating fixture inside the chopper cylinder. The beam splitter divides the beam into two equal parts sending one part horizontally through the first row of slots and the other part to the mirror which reflects it vertically through the second row of slots. The two beams are reflected by mirrors mounted in Part J, Figure A-6, and Part K, Figure A-8, and are recombined into a single beam in Figure A-6, Part L. How this combination of mirrors and beam splitters work to produce a beam consisting sequentially of a horizontal scan and then a vertical scan is described in detail in Appendix B.

Beam Expander and Mask

After the light beam is recombined it enters a beam expander Part M, Figure A-5, which enlarges it to about 1.5-in. diameter. A mask is placed over the exit of the beam expander to restrict the size and shape of the beam

to a 1-in. square. Since the light beam is collimated, it retains the 1-in. square cross section (approximately) for the 300 ft range of the instrument.

The beam, after leaving the expander-mask combination strikes another beam splitter (incidental to beam projection but necessary for receiving the signal) and part of it is reflected to the scanning mirror.

Signal Reception

When the projected light strikes a target (retro reflector), it travels directly back along the projected light path to the scanning mirror where it is reflected to the beam splitter discussed above. The beam splitter transmits part of the returning light through a filter and then to a photo multiplier tube Figure A-5, Part N. The photo multiplier tube is needed since the light reaching it at best, is less than 0.25% of the light produced by the laser (ignoring attenuation and scattering due to dust, water vapor, and air movement in the light path and efficiency of optical components).

Component Mounting

All of the components were attached to an aluminum box shaped extrusion, Figure A-9, Part O. Special mounting fixtures were fabricated to accommodate the critical alignment required for all optical components. In some cases, screw adjustments (of mirror angle and position, for example) were provided; in others, adjustment was accomplished by using shims between the mount and aluminum box frame. In almost all cases, the job of alignment could be made easier by modification or redesign of the mounting hardware. Other comments on component mounts and frame are included in the recommendations section of the report.

Enclosure

To accommodate demonstration of the instrument underground, we fabricated a temporary enclosure for the instrument. This enclosure was not designed to fullfill all the requirements since funds remaining at the time were very limited, but was designed to protect the instrument during the controlled conditions existing during the demonstration. No provision was made for special cooling, for compartmentizing (which would help stability), or for adjustments needed after final assembly. The enclosure caused problems during final lab evaluation and demonstration (discussed later).

PROTOTYPE DESCRIPTION - ELECTRONICS

This section of the report describes the electronics subsystem from a functional and circuit analysis viewpoint. The electronics subsystem encompasses power supplies, target signal detector, target position detection circuitry, stepping motors (discussed earlier), and controllers for these motors which establish the raster scan for the beam. Except for packaging, the electronics subsystem is essentially a completed and functional system for underground operation.

Functional Description

A block diagram of the electronics subsystem is shown in Figure A-11 and illustrations of the electronic chassis and cabinet are shown in Figures A-12 and A-13. Functionally, the system has two modes of operation: MANUAL and AUTOSCAN. The MANUAL MODE provides operator control of the coarse beam position in two dimensions. The beam may be jogged one step at a time or traversed rapidly. The controls are located at the left side of the chassis front panel as shown in Figure A-12.

In the AUTOSCAN MODE, the beam is traversed in a raster pattern defined by preset limits in X and Y directions. When a target is detected within the beam, the scan is stopped and a measurement of target position within the beam is taken. This information is displayed in the three-decade displays (fine target position) on the front panel.

The fine target position is generated by measuring the time interval started when the chopper aperture uncovers the edge of the beam and ended when the target signal is detected. To provide greater accuracy, the trailing-edge phenomenon (time between fall of the target signal and total covering of the beam by the chopper) is also measured. These measurements are performed in both X and Y directions and averaged over a 3.5-sec period for every target stop; results are then displayed on the front panel and remain displayed until the autoscan is started again by activating the front panel pushbutton.

Total target position data is displayed digitally in 14 decades of front panel display while the coarse target position is displayed in four decades each for X and Y directions. These displays merely keep track of pulses applied to the beam position stepping motors.

Data acquisition waveforms present during a target stop are shown in Figure A-14. The reference pulses shown in lines 1 and 3 are derived from reference sensors mounted adjacent to the chopper drum. These sensors which are FPS 103 reflectance transducers consisting of an LED and a phototransistor, generate outputs that are synchronized with light and dark areas placed on the chopper drum. Their outputs are differentiated as shown in lines 2 and 4 to produce leading- and trailing-edge time-reference pulses. An amplified target signal is shown in line 5 and after differentiation in line 6. This signal is made up of alternate vertical and horizontal target reflections when a target is situated within the beam. Lines 7 and 8 show output counter commands for both X and Y data generators. Note that each target pulse produces a pair of command pulses; one whose width equals the leading-edge time difference between reference and target, and one for the trailing-edge time differences. The width of these pulses is a linear function of target position within the beam. When on, these command pulses gate a high frequency clock onto digital divide 256 counters. The counter outputs are displayed as fine target position on the front panel. The counters are organized so as to display an average accumulated from 1280 samples each of horizontal and vertical position after a target stop. This accumulation period requires 3.55 sec.

The repetition rate of the high-frequency clock used to drive the fine position counters establishes the calibration of the display with respect to fine target position. This repetition rate is adjustable around a center frequency of 150 kHz. Assuming a square beam 1 in. on a side at the target area, a repetition rate of 144 kHz would produce a calibration of one count per 0.001 in.

A flow diagram for the raster scan control and target stop logic is shown in Figure A-15. Referring to the figure, a raster scan is initiated by activating the START AUTOSCAN button. The raster pattern consists of plus and minus vertical sweeps followed by a plus horizontal index each time the

zero or maximum vertical limits are reached. When the maximum horizontal and vertical limits are reached, a retrace is initiated which returns the beam to its zero position. The limits are detected by hardwire decoding from the coarse position counters but could be made adjustable by installing front panel thumbwheel switches and digital comparators into the system.

A target stop and data acquisition cycle will be initiated when a target signal is detected if the leading edge of the target signal occurs inside prepositioned time gates (referred to herein as target gates) for both vertical and horizontal, and if the raster is moving upward. The target gates can be adjusted so that the scan will not stop unless the target is located in the center portion of the beam. The directional provision is such that target stops are always made with the beam coming in from the same direction, thereby nulling the effects of backlash in the mirror scanning linkage.

If a target is detected inside the target gates, while the beam is moving downward, the next horizontal index is inhibited so that the beam will retrace its path vertically to come in on the target from below.

Upon achieving a target stop, a 0.5-sec delay (ϕ) is initiated, after which data acquisition from the target is begun. The delay permits any mechanical vibrations to decay. The data acquisition cycle has been previously described on page 11. Upon completion of the cycle, the fine target position is displayed beside the coarse position. Additional data acquisition cycles may be initiated by activating the RECOUNT FINE POSITION BUTTON on the front panel.

An invalid data alarm function is provided for occasions when a weak target signal is returned or the beam is interrupted during the acquisition cycle. Both vertical and horizontal target signals must fall within the

target gate for each of the 1280 data samples that occur. If one or more target signals is missed, the front panel INVALID DATA lamp is lit.

Circuit Description

Circuit diagrams of the electronic subsystem are contained in Figures A-16 and A-17; A circuit analysis follows.

The reference signals in Figure A-16 are applied to comparators A1 and A6, where they are converted to sharp rise and fall pulses. These pulses are differentiated in A2 and A7 to provide negative and positive spikes. The spikes are applied to diode steering networks SD1, SD2, SD5 and SD6, processed through TTL logic, and used to trigger bistables FFO-H and FFO-V, and monostables D1-H and D1-V. The bistables generate fine position counter commands during a target stop. Their outputs are shown in lines 7 and 8 of Figure A-14. The monostables constitute target gate position timing. At the end of their cycles they trigger monostables D2-H and D2-V, which are the target gates. As mentioned previously, both target signals must rise during the target gate intervals to initiate a data acquisition stop.

Target signals from the phototube are amplified in current amplifier A3 and applied to voltage comparator A4. The resultant waveform is applied to diode steering network SD3 and SD4, processed with TTL and applied to bistables FFO-V and FFO-H, generating the fine position counter commands as previously described. The undifferentiated target signals are also applied to the clock inputs of bistables FF1-H and FF1-V. The rising target signal will clock the $\overline{Q}$ outputs of these devices low if the target gates are high. If both $\overline{Q}$ outputs are low, the Raster Scan Latch bistable (FF-3) will be clocked. This initiates a data acquisition cycle provided the beam is moving upward (D input is high).

Delay D-3 is initiated when the beam has been stopped on a target. Fine position counters are cleared during this interval. Upon completion of the D-3 cycle, Counter Latch Control (FF-4) is clocked. This bistable opens the D input to FF-5 (Counter Latch). The next vertical reference

pulse will then clock the $\overline{Q}$ output of FF-5 low, beginning a data accumulation cycle in the fine position counters. Accumulation is continued until 1280 reference pulses are counted in Counter A, which then applies a logical one to System Reset bistable FF-6. The next vertical reference pulse clocks FF-6 into its other stable state, stopping further accumulation in the fine position counters. Fine position data are now displayed.

Target Validation delay D-4 is a retriggerable monostable having a delay time that is set to approximately 80 Msec. Its $\overline{Q}$ output will be continuously low if both target signals are present during every cycle of the 360 Hz chopper frequency. If one or more target signals are missed, the $\overline{Q}$ output will rise, setting FF-2 if a data acquisition cycle is in progress (FF-4 set). Bistable FF-2 will energize the DATA INVALID lamp.

Figure A-17 shows the scan controller, mirror motor drivers and coarse position counters and displays. Stepping motor controllers are not shown. Amplifier A8 is a triangle wave oscillator which develops the motor drive pulses. Monostable D-5 can be triggered from this oscillator or from a manual jog button. Device D-5 applies stepping pulses directly to the motor controller and position counters in the manual mode. Bistable FF-12 provides synchronous START and STOP commands to D-5 in the MANUAL-CONTINUOUS MODE.

In the AUTOSCAN mode, delay D-6 provides the stepping pulses so that proper timing relationships exist between scan limits coming true and motor stepping pulses. The automatic raster scan is controlled by bistables FF-7, 8, 9, 10, and 11. As described previously, maximum and minimum limits for vertical and horizontal are decoded off the coarse position counters. The five bistables serve to keep the raster contained within these limits. It should be mentioned that no control exists outside these limits and whichever drive motor is being pulsed will continue if the START AUTOSCAN control is activated after the beam is manually moved outside the raster limits.

The Vertical Direction bistable FF-7 establishes which line of the vertical motor receives stepping pulses. When a maximum vertical limit is

reached, the Horizontal Index bistable (FF-9) is clocked. The next stepping pulse will be applied to the plus horizontal line and the Horizontal Index Reset bistable (FF-10) will reset FF-9 and change the state of FF-7. The next stepping pulse will be placed on the minus vertical line and will reset FF-10 after which the scan proceeds downward. When the minimum vertical limit is reached a similar reversal is performed to begin an upward vertical scan. When the maximum horizontal limit is reached, the Horizontal Retrace bistable is triggered (FF-11), which causes all stepping pulses to be applied to the minus horizontal line until both minimum limits are reached. Device FF-11 is then reset and a new raster is begun.

If a target is detected during a downward scan, Index Disable device FF-8 is preset and will inhibit a horizontal index at the bottom of the scan line. The vertical detection is reversed and the scan homes in on the target from below so as to minimize backlash error from the mirror linkage.

SETUP AND OPERATION

Following is a summary of the steps and procedures for operating, setting up and calibrating the laser system. Caution should be taken in observing the limits on the step numbers before pressing the autoscan button. Pressing the autoscan button when the step numbers are above the programmed limits causes the scanners to jam against their mechanical stops which could result in damaging the system.

OPERATING INSTRUCTIONS

The instructions given below pertain to routine activation and use of the system. Instructions for setup and calibration are given in the following section. Operating procedure is as follows:

1. Set the scan selector to MANUAL.
2. Turn the POWER switch on.
3. Move the beam to desired zero-zero position with manual jog or continuous controls.

4. Depress the MASTER RESET button.

5. Set the scan selector to AUTOSCAN.

6. Depress the START AUTOSCAN button.

7. After a target stop, the RECOUNT FINE POSITION button can be depressed to acquire additional data sets.

8. To restart autoscan after a target stop, push the START AUTOSCAN button.

PRELIMINARY SETUP AND CALIBRATION

The following procedure should be conducted when initially setting the system up in the lab.

1. Set the scan selector to MANUAL.
2. Turn the POWER switch on.
3. Move the beam to the desired zero-zero position with manual jog or continuous controls.
4. Using manual jog or continuous controls, move the beam until it is centered over a target.
5. Connect Channel 1 of a dual trace oscilloscope to target signal (Test point TS). Connect Channel 2 to the horizontal target gate (Test point HTG).
6. Have the target manipulated for maximum signal amplitude in Channel 1.
7. Adjust the horizontal target gate width and position to produce the desired limits within the beam under which a target stop can be made. (The rising edge of the target signal must lie in the gate to achieve a target stop.)
8. Connect Channel 2 to the vertical target gate (Test point VTG) and repeat Step 7, except adjust vertical gate position and width.
9. Set the fine position clock frequency (P-6) to produce desired fine position calibration.
10. Remove oscilloscope probes and close the front panel for system operation.

PROTOTYPE ANALYSIS

The prototype worked well and design goals of the system were demonstrated, in principle. However, the completed prototype fell short of its design goals in fact due to inadequacies of available components and shortcomings in the design. Since undertaking this contract, there have been

significant developments in electronics and optics. Most of the new products, now commercially available in this area owe their development to space efforts, military requirements and the revolution still going on in the field of optics. Commercially available components pertinent to this system are described in the next section.

An analysis of each part of the present prototype follows:

- Main Frame - The box shape of the main frame is a rectangular aluminum extrusion. The idea of the box shape was good, but the dimensions and material were not adequate for it to be self-supporting and compatible with the geometry of underground openings. This means that the system alignment changes with respect to orientation of the system due to the torques produced by the weight of the mounted components. This is also partially true for any system in which 1 arc sec of accuracy is sought. In calibration laboratories, equipment of this accuracy is usually placed in environmentally controlled rooms on massive vibration tables. The systems are well balanced and leveled. Recently, more rugged equipment claiming this accuracy has appeared on the market for application in tracking telescopes, theodolites, machine shops and many other areas in which accuracy is required.

- Laser - The present laser was designed to be operated on a laboratory bench. In the initial testing no difficulties were experienced. In the prototype system it was noticed that the laser tube seemed to shift slightly inside the housing when oriented in different positions. At the time of purchase of this laser, alignment lasers were not very common and they were relatively expensive. Recently, several manufacturers are producing reasonably priced alignment lasers.

- Optical Mounts - The stability of the mounts supporting the optical elements are marginal and very small amounts of pressure would deviate the alignment substantially. Adjustment was difficult, but possible by proper shimming. For good intensity and uniformity in the beam, it will be necessary to place the laser on an adjustable mount or modify the other mounts.

- Chopper - The present location of the chopper produces undesirable diffraction effects. The projected image of the chopper blade is not a straight edge, but a diffraction pattern. Figure A-18 shows the intensity profile of the image of an edge and Figure A-19 shows a photograph of the diffraction pattern from an edge. This effect seems to be minimized when the chopper is placed in a diverging beam of light. It is presently located in a parallel beam of light.

- Square Mask - The square mask produced a plaid type of intensity distribution across the beam that changed as a function of distance from the aperture. The near field (near the lens) diffraction pattern has dark areas in the middle and the far field (far from the lens or at the image position of the lens) has dark areas at the corners of the beam. The near field is referred to as a Fresnel diffraction pattern and the far field is referred to as a Fraunhofer diffraction pattern. Figure A-20 shows the transition of Fresnel diffraction to Fraunhofer diffraction.

- Diffraction - The combination of the diffraction patterns from the square aperture and the traveling chopper blade causes noise on the receiving detector, which affects the electronics. It turns out that the prototype is amplitude dependent and, thus, bad data can result from the uneven intensity pattern. If the size of the laser beam were reduced and the beam was not vignetted (shaded), then the diffraction pattern from the aperture would be constant as a function of distance. This is due to the Gaussian intensity profile of the laser beam. The Fraunhofer diffraction pattern of an aperture is the Fourier transform of the pupil function (the amplitude across the aperture). The Fourier transform of a Gaussian is a Gaussian, thus there are never fringes at the edges or center of the beam. Shading the aperture in this fashion is common in optical data processing and is called apodization. In a similar fashion, the chopper slots could be made by a photographic process on a glass cylinder in order to shape (apodize) the transmission across the slot to a Gaussian or cosine type curve. This would reduce the fringe effect of the chopper slots.

- Atmospheric Effects - The refractive index of air varies as the temperature and gas content vary. Thus, moving air currents of different temperature and gas content will cause the beam to shift around and the beam intensity will vary across the beam. Under random conditions this should average out over about 3 sec. If there are thermal gradients or gas gradients in the tunnel, the target locations could be in error.

- Stepping Motors - The stepping motors chosen were the most accurate on the market at the time of purchase. It is expected that stepping motors like other related components have improved since then and the application of stepping motors is rapidly increasing. The current state-of-the-art has not been investigated. The present stepping motors produce an average step size of 36.2 arc sec of the beam in the horizontal direction and 40.8 arc sec in the vertical. The maximum variation in step size is about ±10 arc sec. This is a little more than 1/8 in. at 300 ft (0.1746 in.). Thus, in order to use these motors it would be necessary to identify each of the 800 steps and then make sure that the steps repeated over each complete revolution. Figure A-21 shows a plot of the horizontal step sizes.

- Horizontal Scanner - The horizontal scan is produced with a worm gear having a 2-in. radius. A requirement to measure 0.017 in. at 300 ft equals a 1 arc sec total accuracy. This implies a ±1/2 arc sec repeatability at the worm and gear interface. This means that the mechanical position of the outside radius of the worm gear must be repeatable to ±5 micro in. This is not impossible to accomplish mechanically, but it is very difficult and precautions must be taken. The present worm gear assembly was tested and proved to have an average total repeatability of 1.2 arc sec. This is about 0.020 in. at 300 ft and 12 micro in. at the outside radius of the worm gear. Thus, the repeatability of the horizontal scanner came very close to the design goal.

- Vertical Scanner - Vertical scanning is performed by tilting a mirror with a 2-in. tangent arm. The mirror tilted in this fashion produces optical doubling and the mirror effectively has a 1-in. tangent arm. Hence, the mechanical positioning of this tangent arm needs to be twice as good as the worm gear radius. Instead, it was 5 times worse which produced repeatability errors 10 times worse due to optical doubling. The average scanning repeatability was 10.8 arc sec, which is about 0.175 in. at 300 ft and about 48 micro in. at the end of the tangent arm. This is compared to a design goal of ±2.5 micro in. The tangent arm is positioned with a ball screw and nut, where the screw is rotated by the stepping motor and the nut travels along the screw pushing or pulling the tangent arm. In order to improve on the repeatability, the ball screw manufacturer was contacted. They stated that the best repeatability they could obtain was 50 micro in. with their best polished ball screws. Their errors were attributed to the nut wobbling and the balls in the nut not being perfectly spherical. Hence, the repeatability for the vertical direction was as good as could be expected. This was not detected earlier because the scanner was tested over small angles and the balls were returning to their original positions making repeatability much better.

- Electronics - Some variations in the readings of the small area scanner were attributed to the high voltage supply for the photomultiplier target signal detector. This supply provides a positive output with respect to ground and should be altered to produce a negative output. This alteration would permit operation of the PMT anode at ground potential, resulting in a much greater signal-to-noise ratio and substantially increased accuracy for target position detection. Such alteration was beyond the scope of the present program.

- Backlash - Mechanical backlash was not a problem because the scanner was preloaded and data were taken only while scanning in one direction.

- Calibration with Distance - The raster scanner is strictly an angular scanner and the positional displacement is linearly proportional to

the distance from the scanner. Hence, dimensional errors are a function of the distance from the scanner. Neglecting atmospheric and diffraction effects, the chopper scanner also varies somewhat with distance. One would assume that the 1-in. square remains a 1-in. square from the scanner to 300 ft away. Thus, the calibration of the chopper scanner should be independent of distance. In theory, this is not the case and Figure A-22 shows schematically how the laser beam reduces to a "waist" and then spreads again. The equation for the diameter of the laser beam as a function of distance is hyperbolic. The waist can be located at almost any distance from the lens by focusing the last beam expander. When the beam expander is focused at infinity, the waist is located at the aperture of the expander. By changing the focus the waist can be located at 150 ft so that the beam is 1 in. at 300 ft. Hence, the beam will be slightly smaller at all other distances less than 300 ft and larger for all distances greater than 300 ft. The graphic illustration in Figure 20 is applicable for a Gaussian beam; the curve for a truncated (produced by the mask) Gaussian beam would be different. The same type of effect was observed with the masked beam.

FIELD DEMONSTRATION

At the conclusion of the second year's effort a field demonstration was conducted at an underground site near Spokane, Washington (Figure A-3a). Prior to the demonstration the system operated satisfactorily in the laboratory with a few minor exceptions. The system accuracy was poorer than originally designed due to some problems in the mechanical hardware and the high-voltage power supply. Even with these shortcomings, it was felt that a field demonstration would be instructive and would provide useful information to the sponsor.

As often happens during transit, the system was damaged. The damage disabled the vertical scanner. Thus, during the field demonstration the vertical scanner did not work and the information displayed on this channel was meaningless.

Additional technical difficulties were also experienced, part of which were associated with the positive polarity on the high voltage supply which caused a 60-cycle ripple on the target signal. The net results of this ripple on the target signal are evident by variation in the output of ±5 mils. Occasionally, as happens with any system which is slightly unstable, larger variations as high as ±25 mils were experienced.

The field demonstration did meet some of its objectives. However, it fell short of its goals in resolution and the demonstration of only one channel.

RECOMMENDED MODIFICATIONS AND UPDATING OF THE SYSTEM

The present system fell short of its original design objectives due to several problems. In general, the mechanical design needs to be re-evaluated and updated with refinement of the scanner drive assemblies. In addition, the stepper motors which were originally purchased had uneven steps and appeared to go in sequences of four. This is only partially true in that after several revolutions this sequence becomes somewhat random, thus additional efforts need to be made to upgrade the stepping motors. At the time these motors were procured they were the best available. At this point in time, which is now some 3 years after the original motors were procured, it is our belief that there are better units available.

In effect, then, we would recommend that the mechanical hardware for the actual drive assemblies be redesigned and that worm gear assemblies be utilized throughout. By using antibacklash techniques and very carefully choosing the worm gear assemblies and by careful mechanical design, it is believed that the precision originally projected can be achieved. The position of the chopper mechanism should also be relocated so it chops a diverging beam of light. This will help improve the overall accuracy of the system.

There is a problem in the electronics because of the high-voltage power supply. Initially, a high-voltage power supply was ordered with a positive ground. Upon receipt of the power supply it was found to have a negative ground system. It was not anticipated that this would present a significant problem and it appeared there would be a large time delay to exchange the power supply, but in practice this has proved to be a troublesome problem and needs to be corrected. This is not an extremely difficult or expensive change but does require some rework in the electronics.

Utilizing the information achieved from this design it is recommended that redesign of the electro-optics layout be done to optimize the performance of the overall system.

It is still our opinion that the original concept of the system is valid and that this system will perform as originally scoped. There are systems which can be fabricated which are more expensive and complex than the system described in this report. In essence this system is economical and with additional design can be made to operate satisfactorily even in mining environments.

POSSIBLE MODIFICATIONS TO THE ORIGINAL CONCEPT

It is possible to update the present concept utilizing new developments that have recently been introduced on the market. Very recently an induction angle measuring transducer with a resolution of 1 arc sec has been introduced. This high resolution shaft encoder could be placed onto the mirror systems providing position readout to the desired absolute accuracy projected for the system. The one disadvantage of this system is that the induction angle measuring transducer is an expensive item on the order of $10,000. One possibility that has not been investigated is potential significant cost reduction resulting from mass production of the encoder. Use of the encoder would provide the desired accuracy and resolutions originally projected for the system because mechanical accuracy and drift would be circumvented.

We would recommend using the present chopper scheme to identify the absolute position of the target within the 1 in. diameter beam. This system has proved to be adequate, having the required resolution as presently designed.

The present system was not completed as originally projected. Due to time and fund limitations, portions of the electronics were not completed. It will be necessary to debug part of the electronics allowing the system to be put into an automatic operation mode. In addition to this, as has been projected for third year funding, the system would be field tested and data acquisition capability would be added. The data acquisition for inline operation would basically involve adaptation of a tape recorder which could be taken above ground periodically and the tapes processed in a digital computer. The present system does have the necessary digital inputs to make it compatible with data recording requirements.

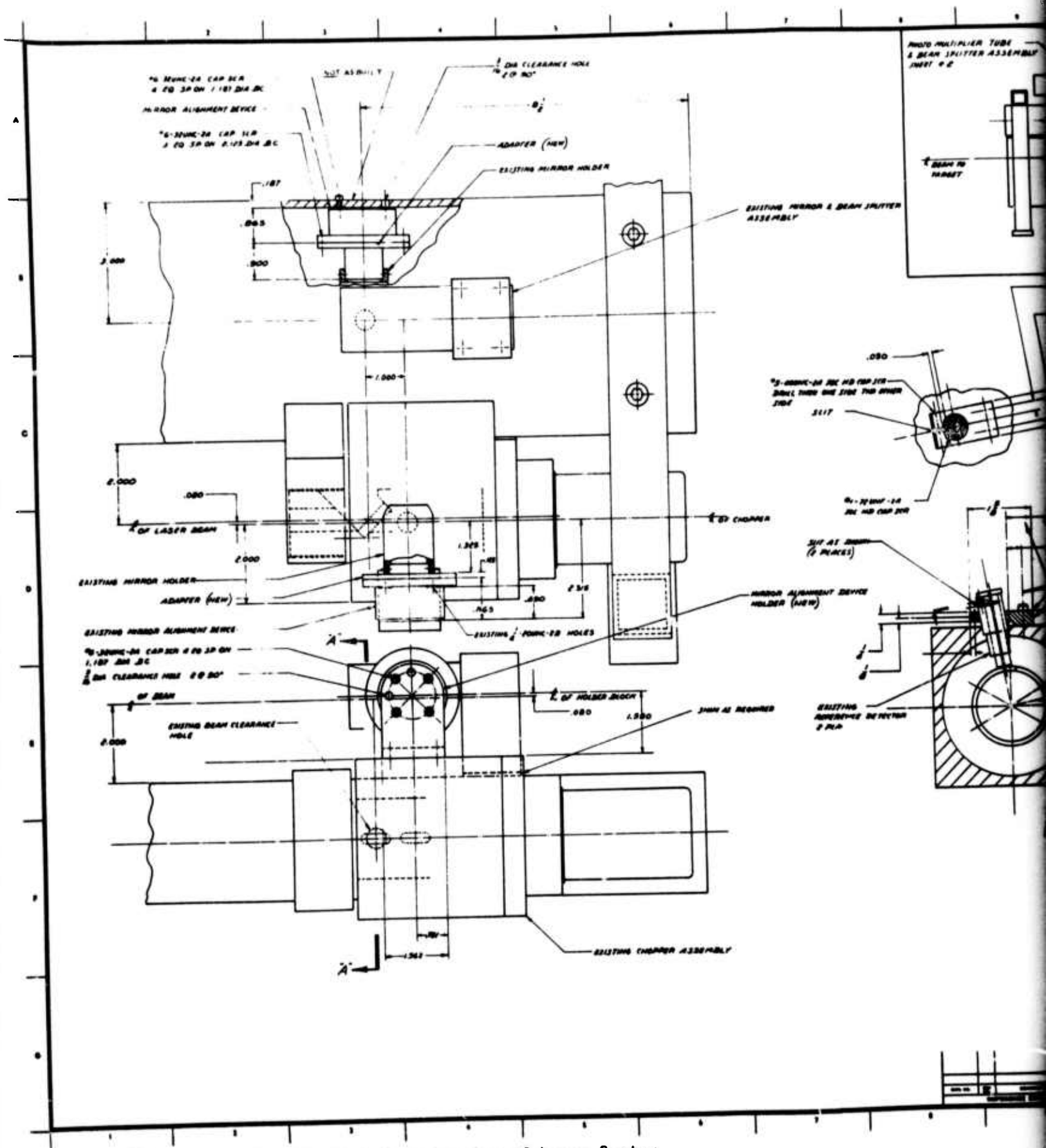

FIGURE A-1. Mechanical Design Drawing of Laser System

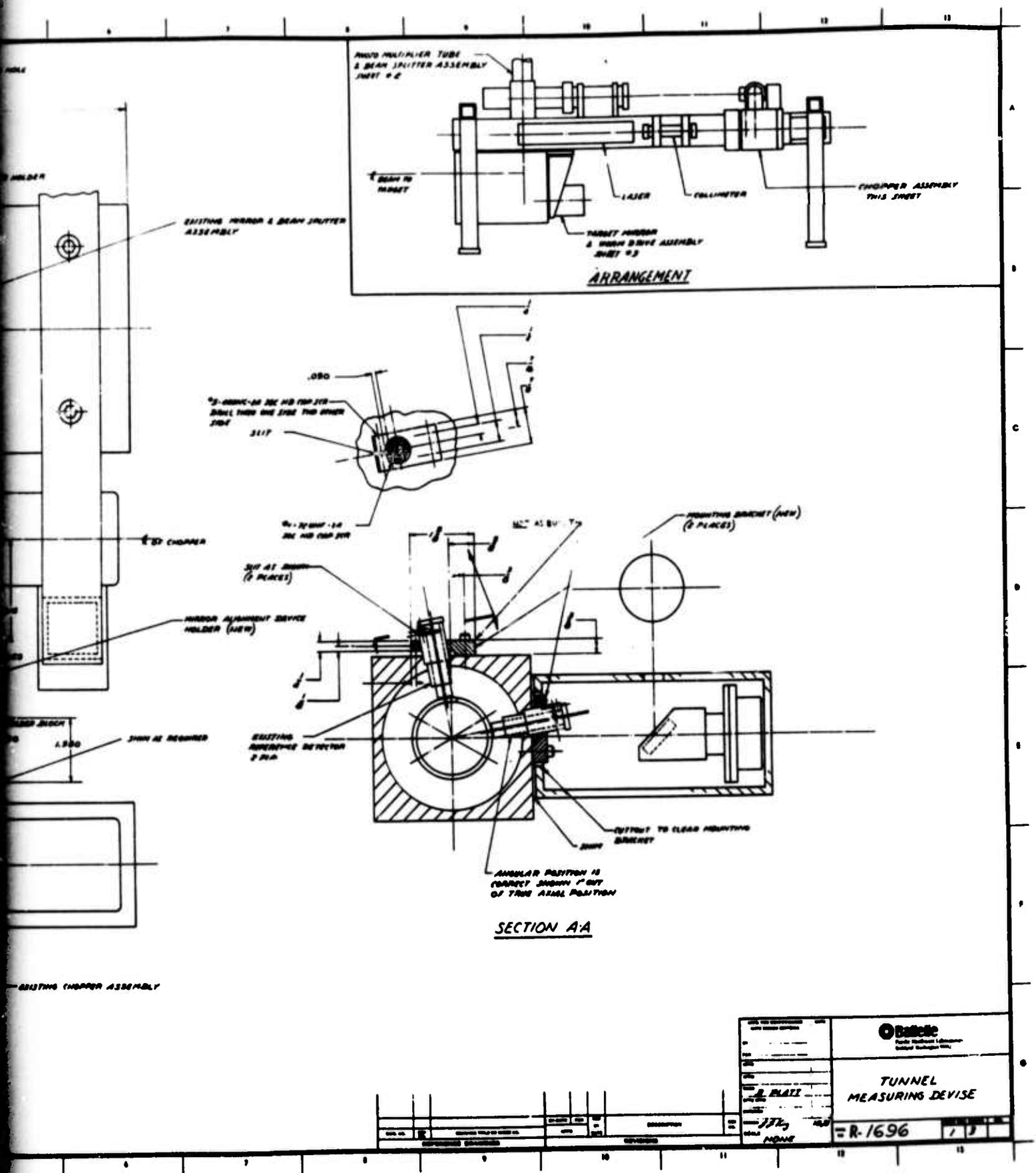

Battelle

TUNNEL MEASURING DEVISE

R-1696

System

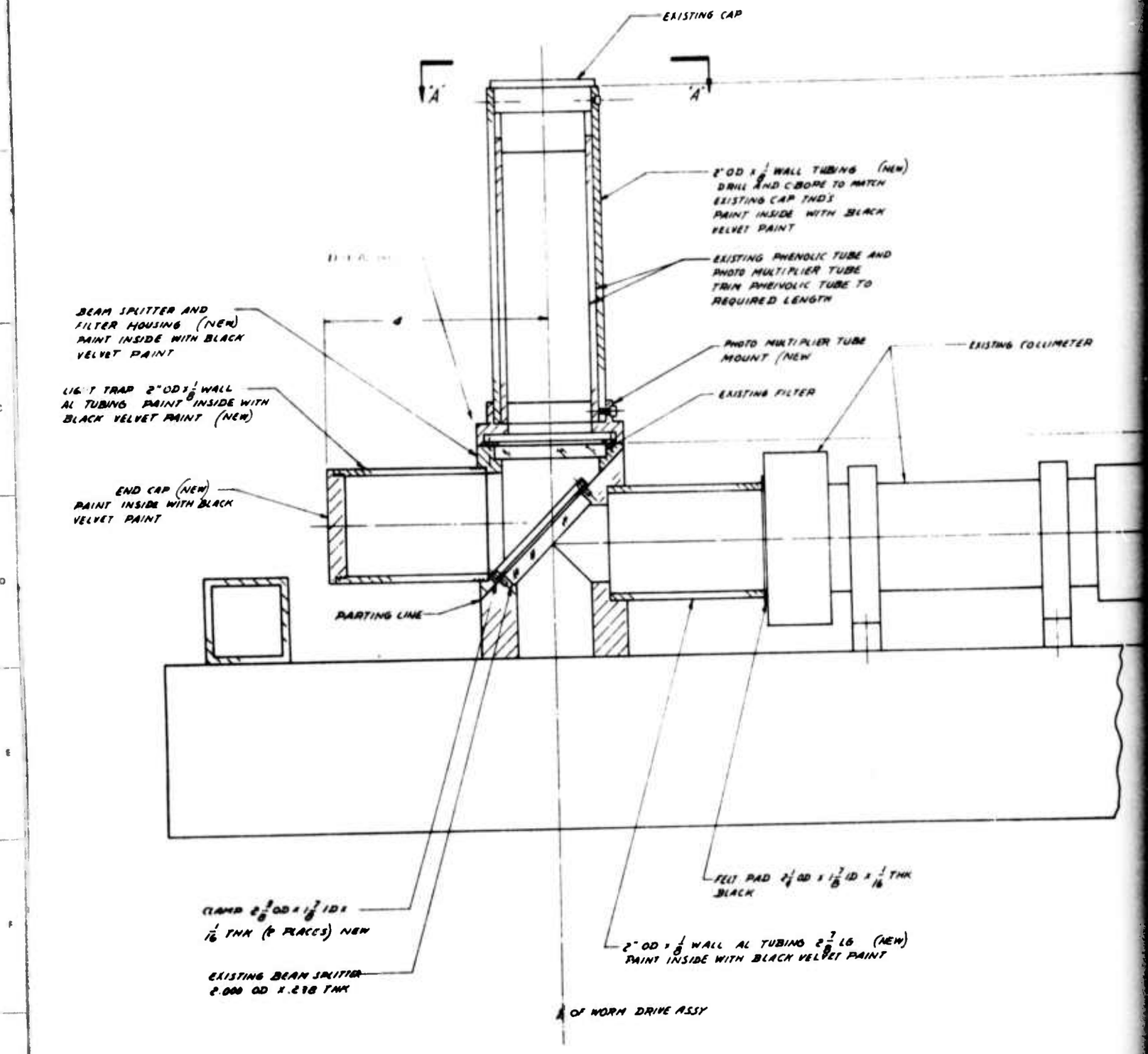

FIGURE A-2. Mechanical Design Drawing of Laser System

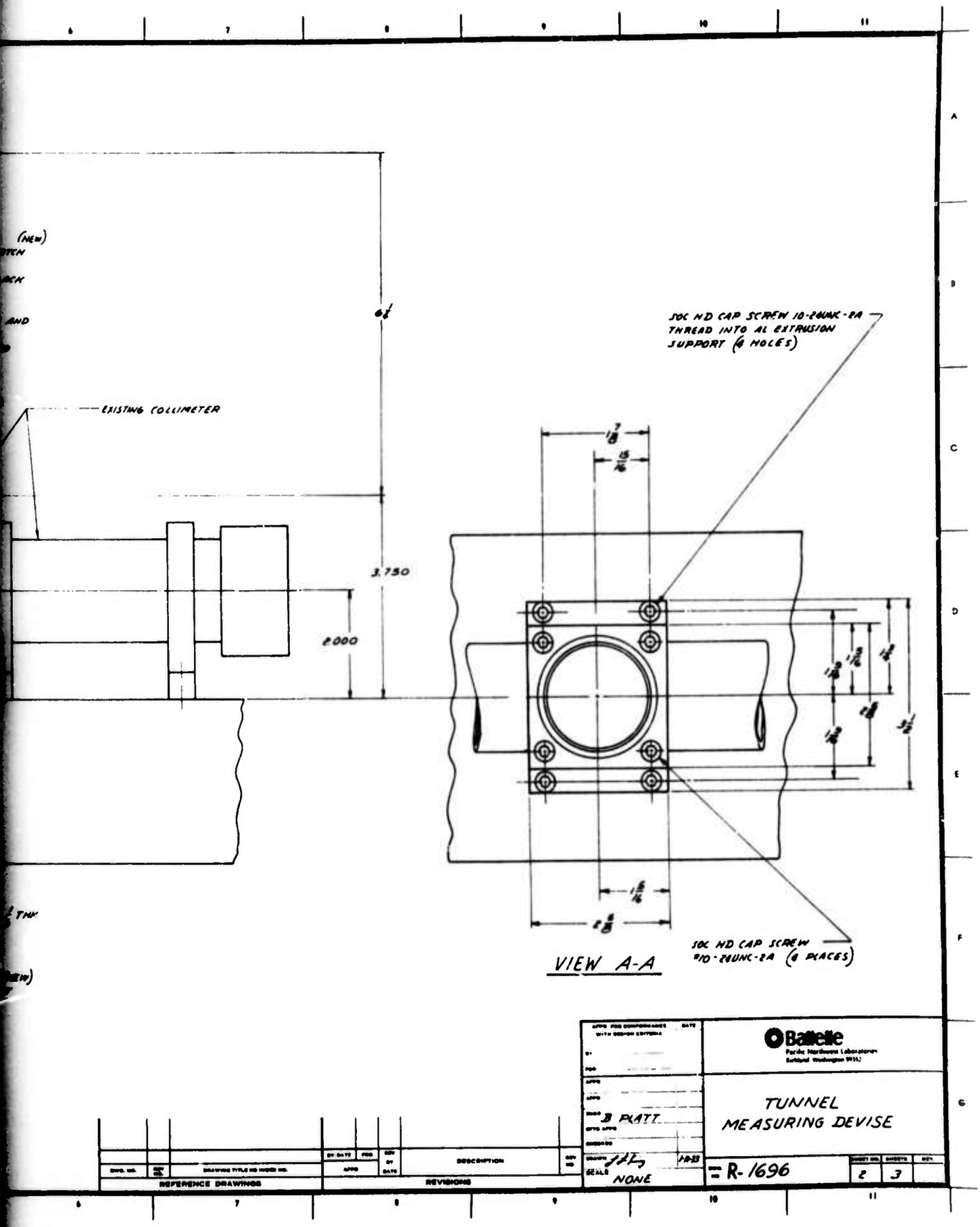

(NEW)
EXISTING COLLIMETER
6 1/4
3.750
2.000
SOC HD CAP SCREW 10-24UNC-2A
THREAD INTO AL EXTRUSION
SUPPORT (4 HOLES)
1 7/8
15/16
1 5/16
1 3/4
2 5/8
3 1/2
1 5/16
2 5/8
SOC HD CAP SCREW
#10-24UNC-2A (4 PLACES)
VIEW A-A
Battelle
Pacific Northwest Laboratories
Richland Washington 99352
TUNNEL
MEASURING DEVISE
B PLATT
SCALE NONE
R-1696
2
3
REFERENCE DRAWINGS
REVISIONS
DESCRIPTION

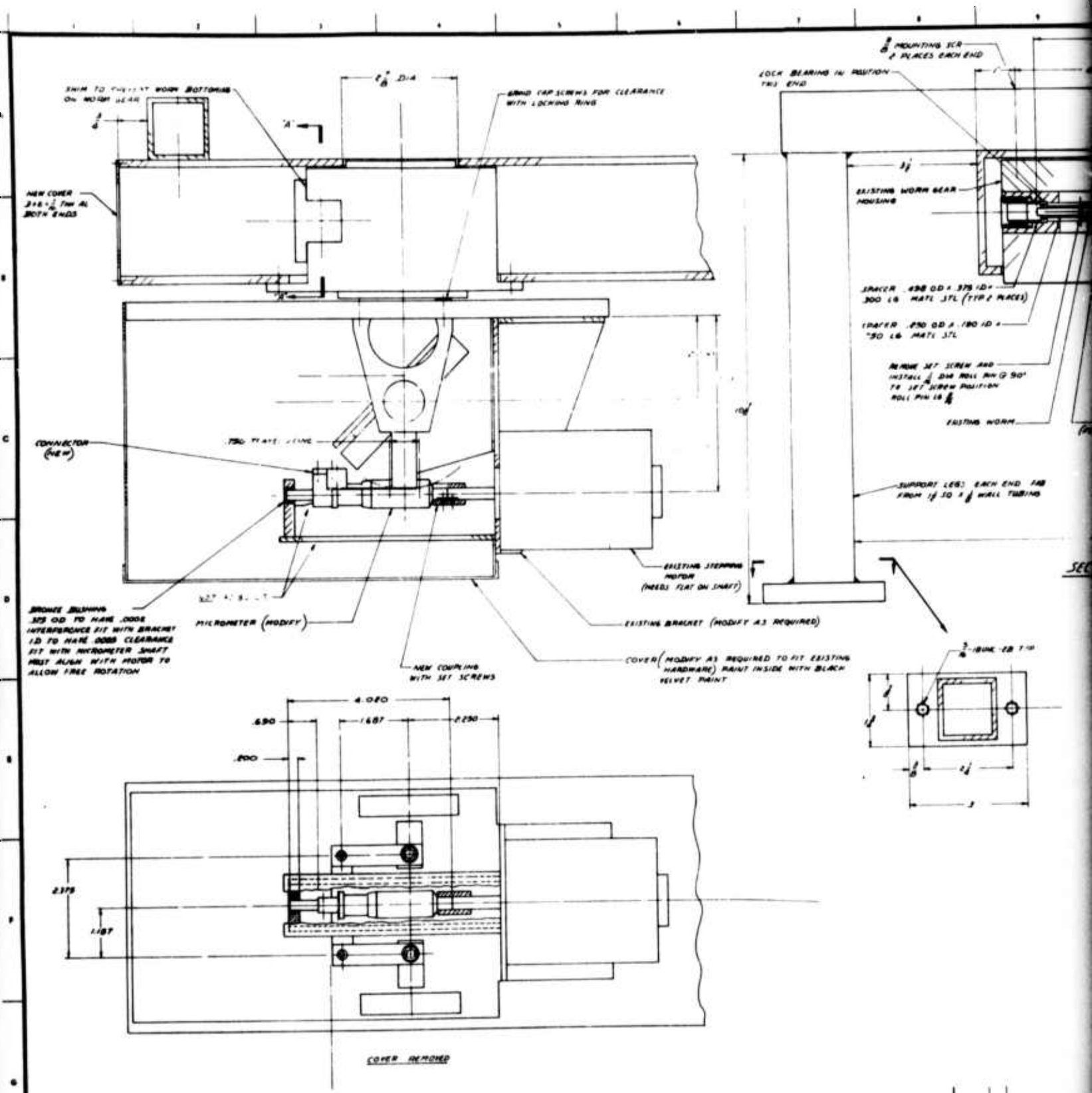

FIGURE A-3. Mechanical Design Drawing of Laser System

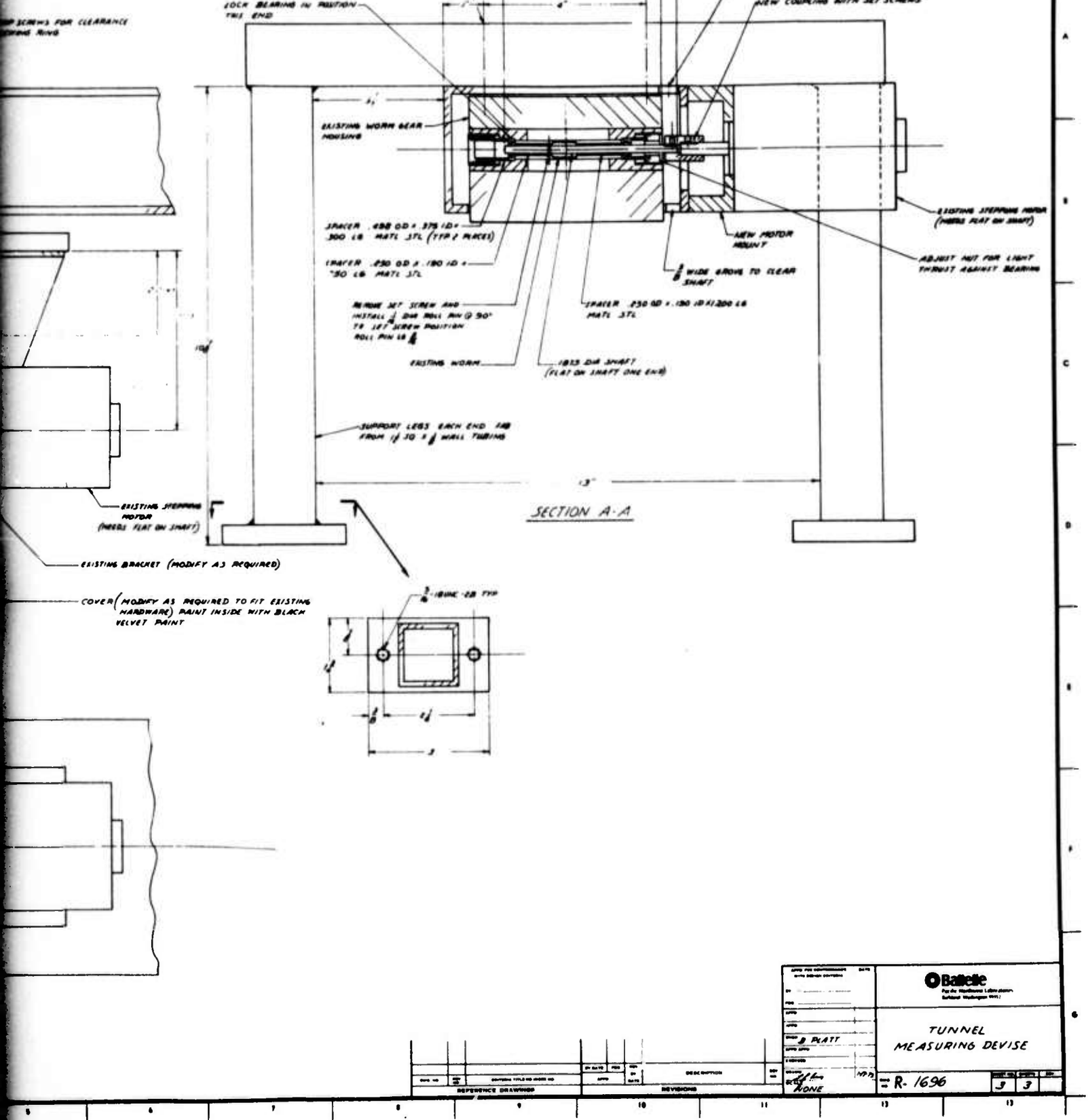

Battelle

TUNNEL
MEASURING DEVISE

R-1696

3 3

Laser System

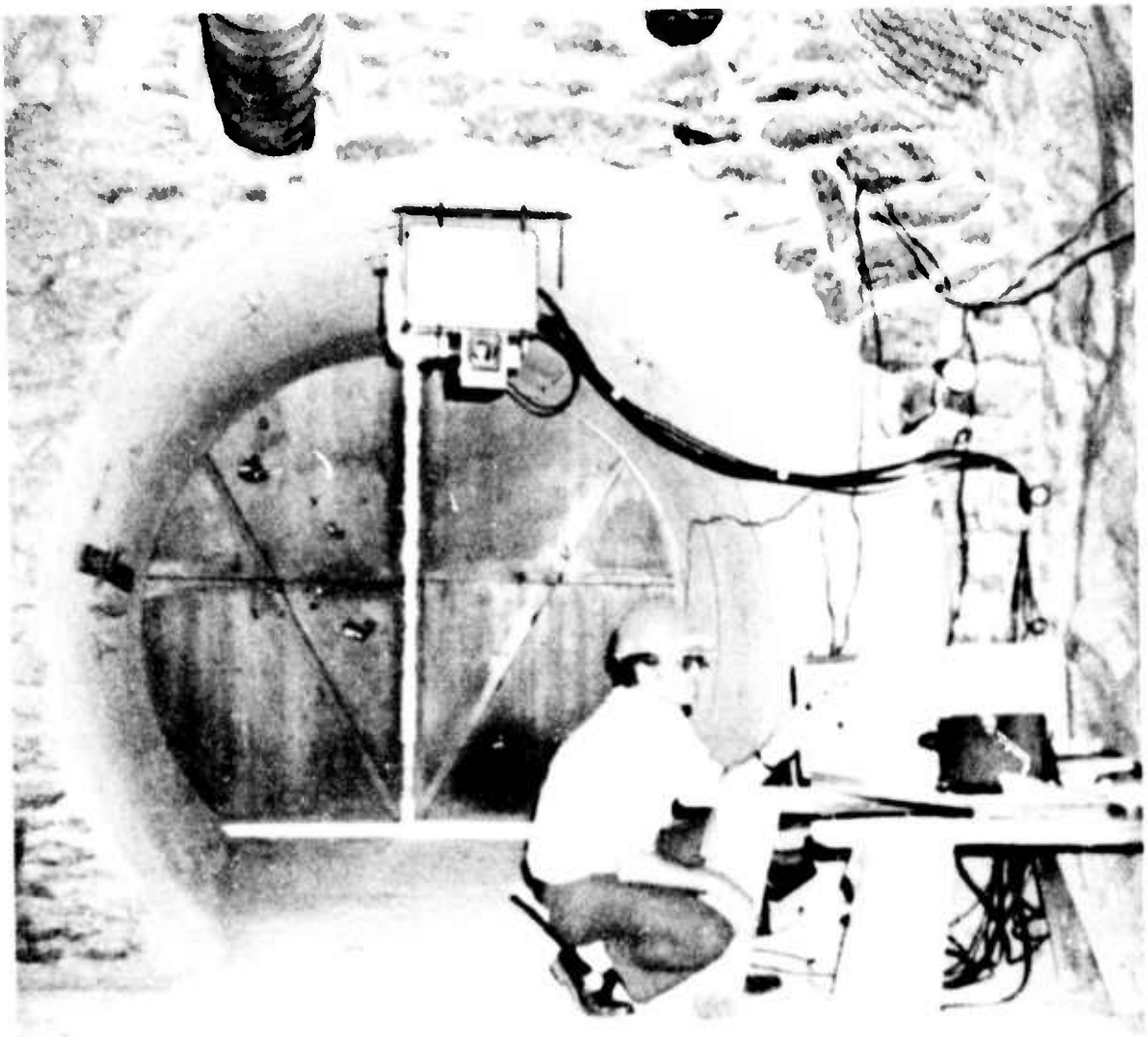

FIGURE A-3a. Field Demonstration of Laser System

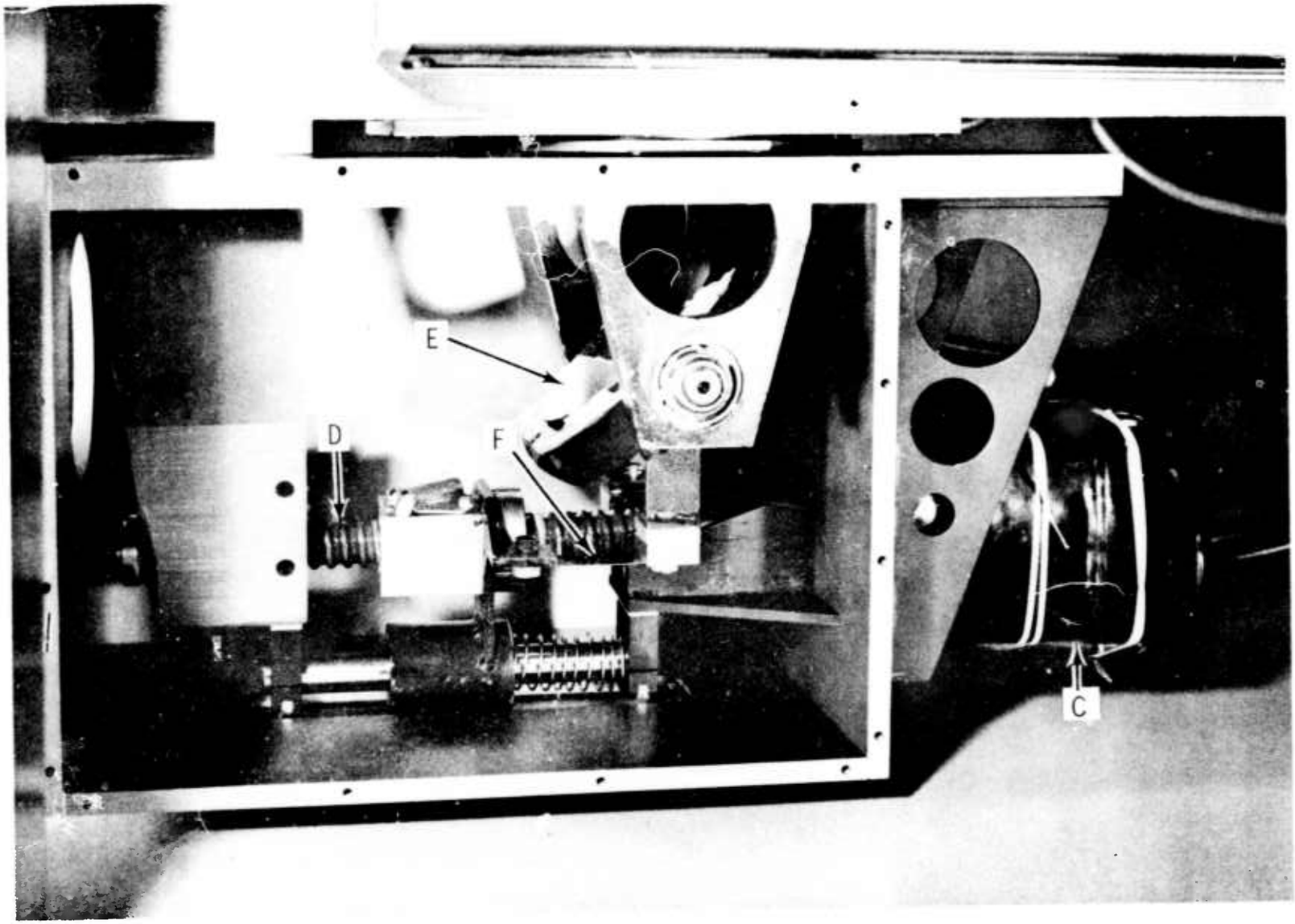

FIGURE A-4. Scanning Mirror Assembly

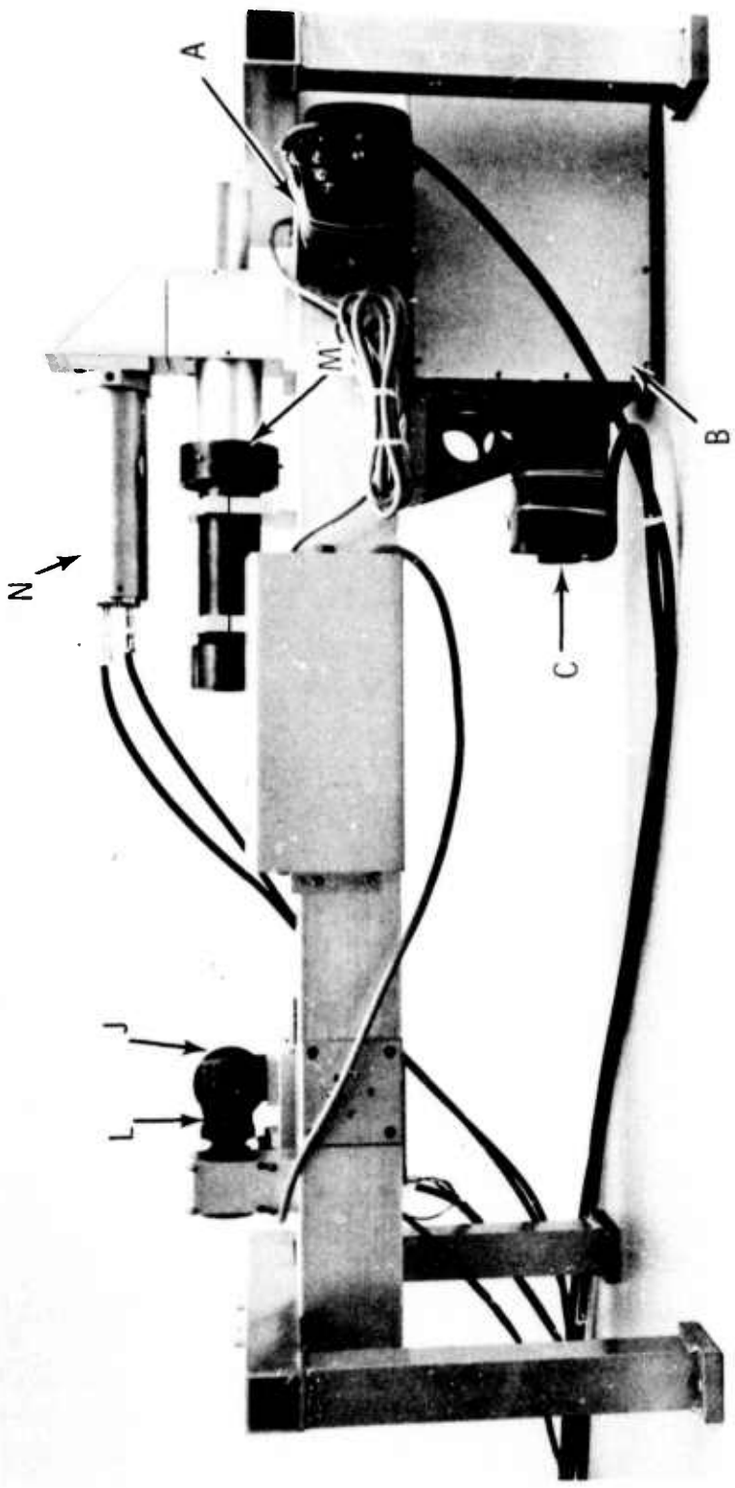

FIGURE A-5. Laser System Instrument Assembly

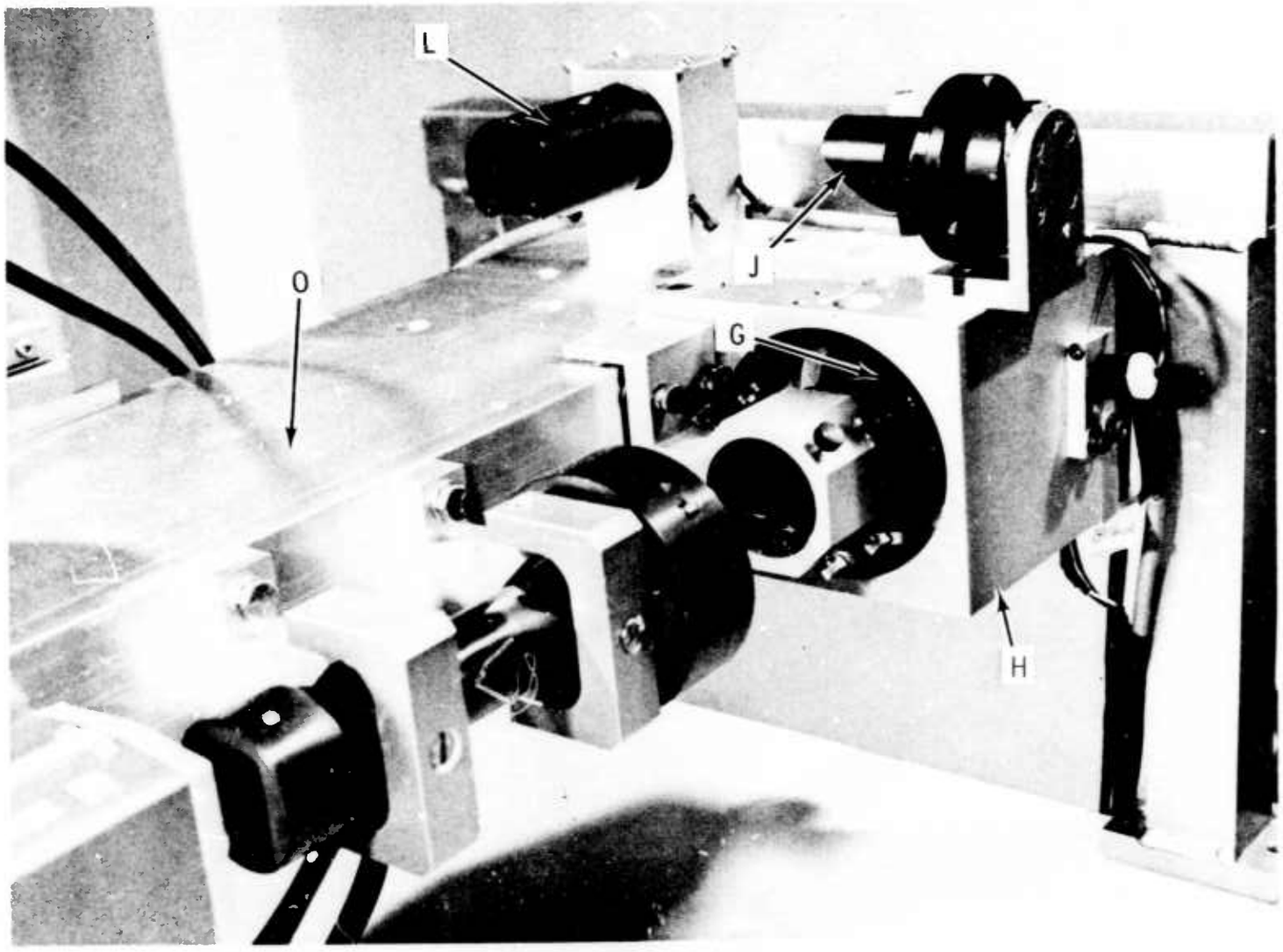

FIGURE A-6. View of Instrument Showing Beam Expander and Chopper Assembly

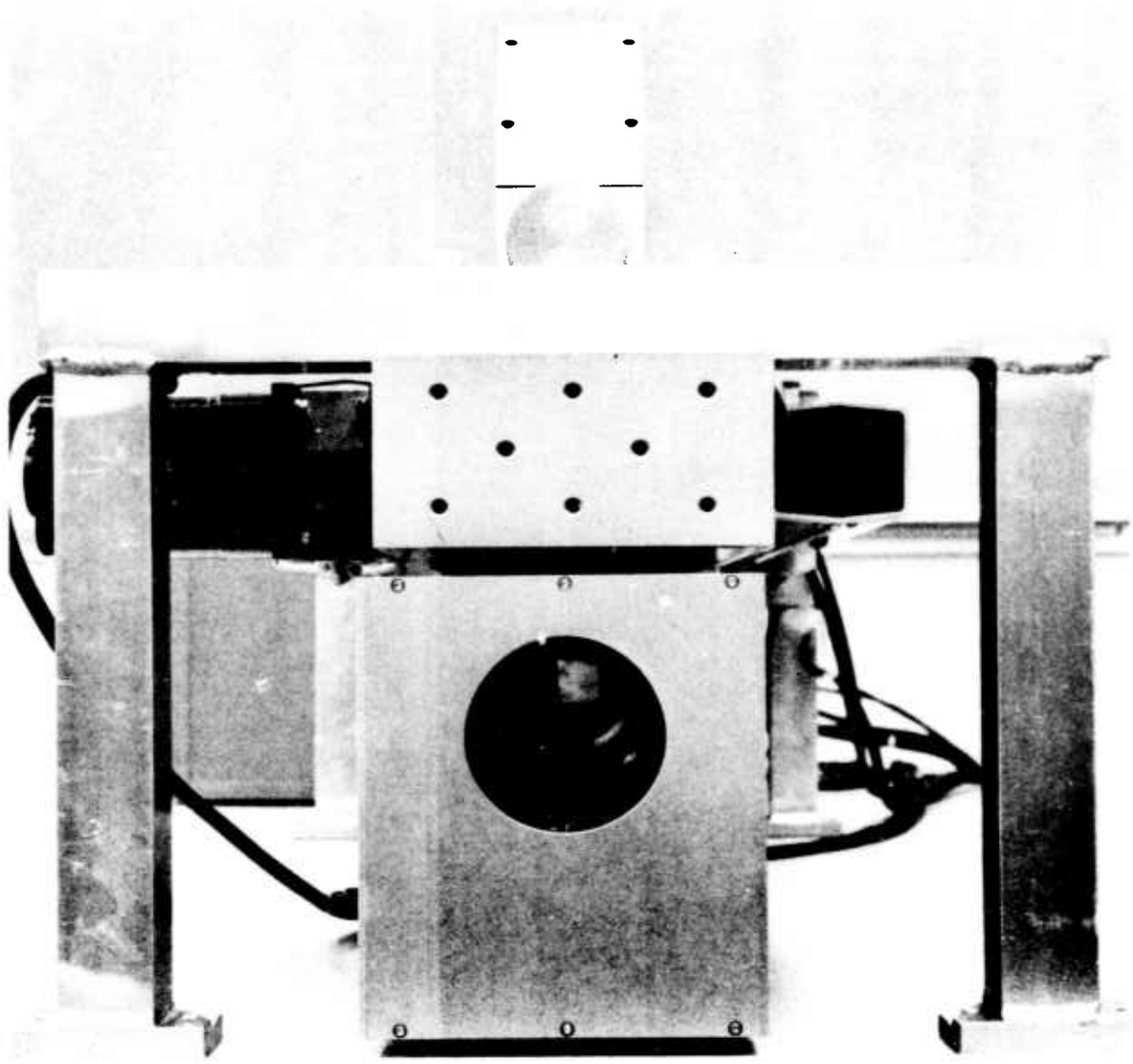

FIGURE A-7. End View of the Assembly

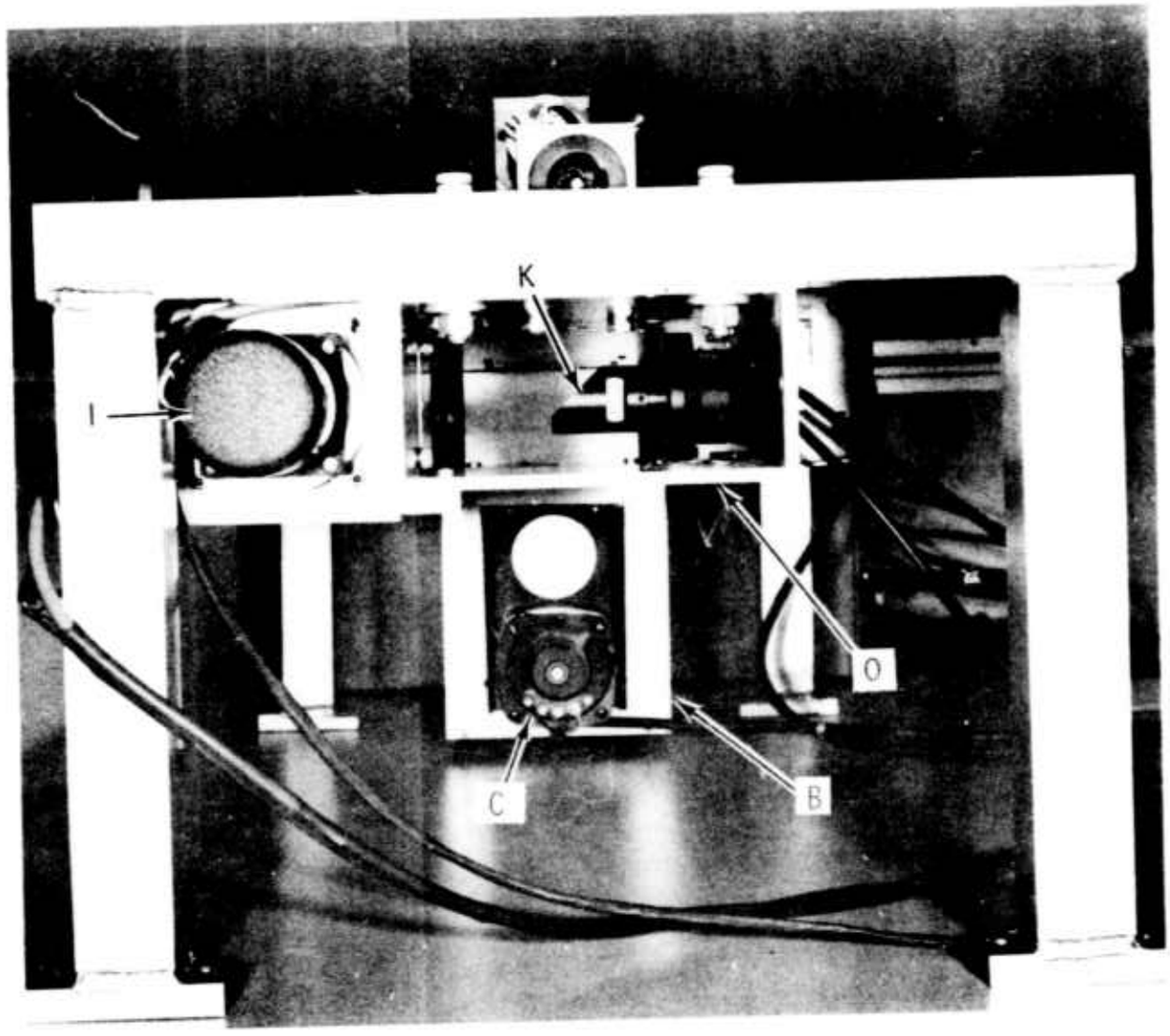

FIGURE A-8. View Showing Parts Mounted Internally in the Frame

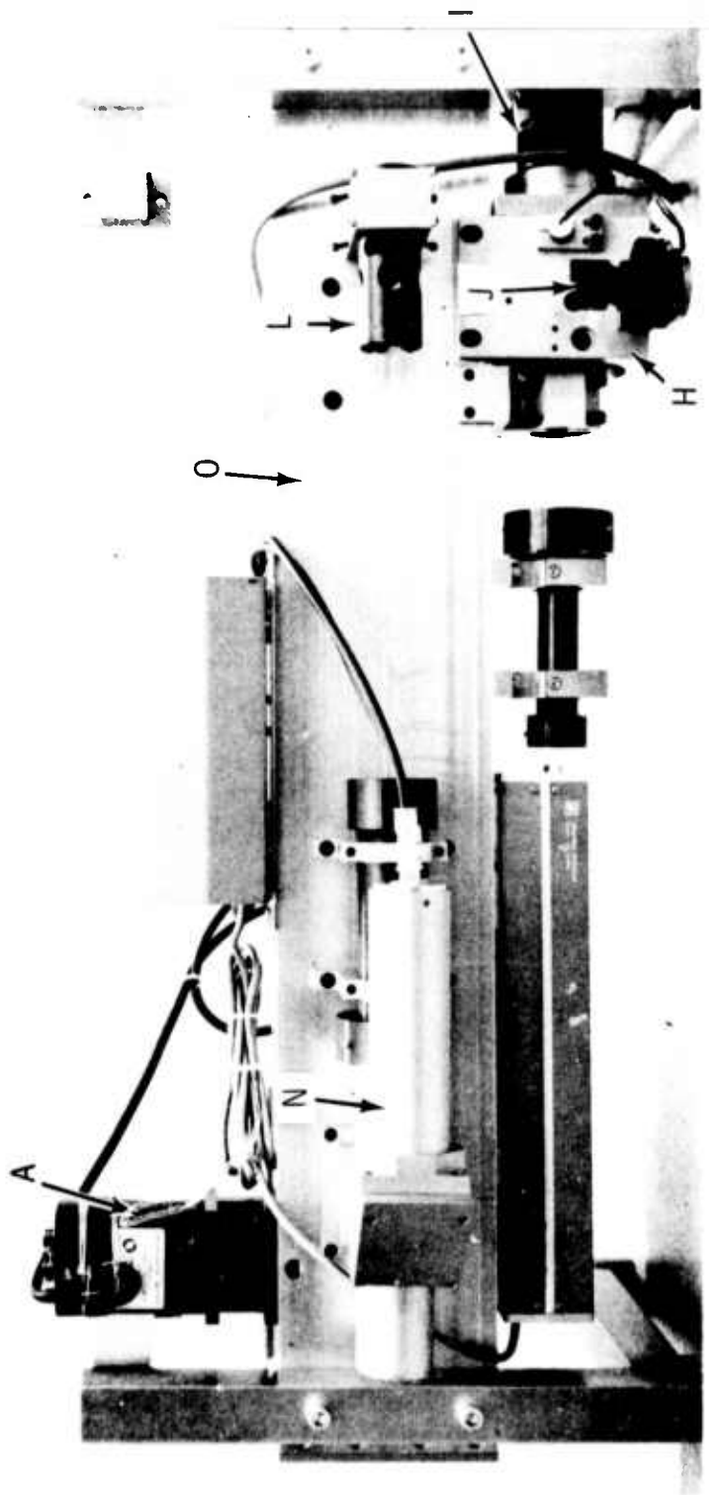

FIGURE A-9. Overall Top View

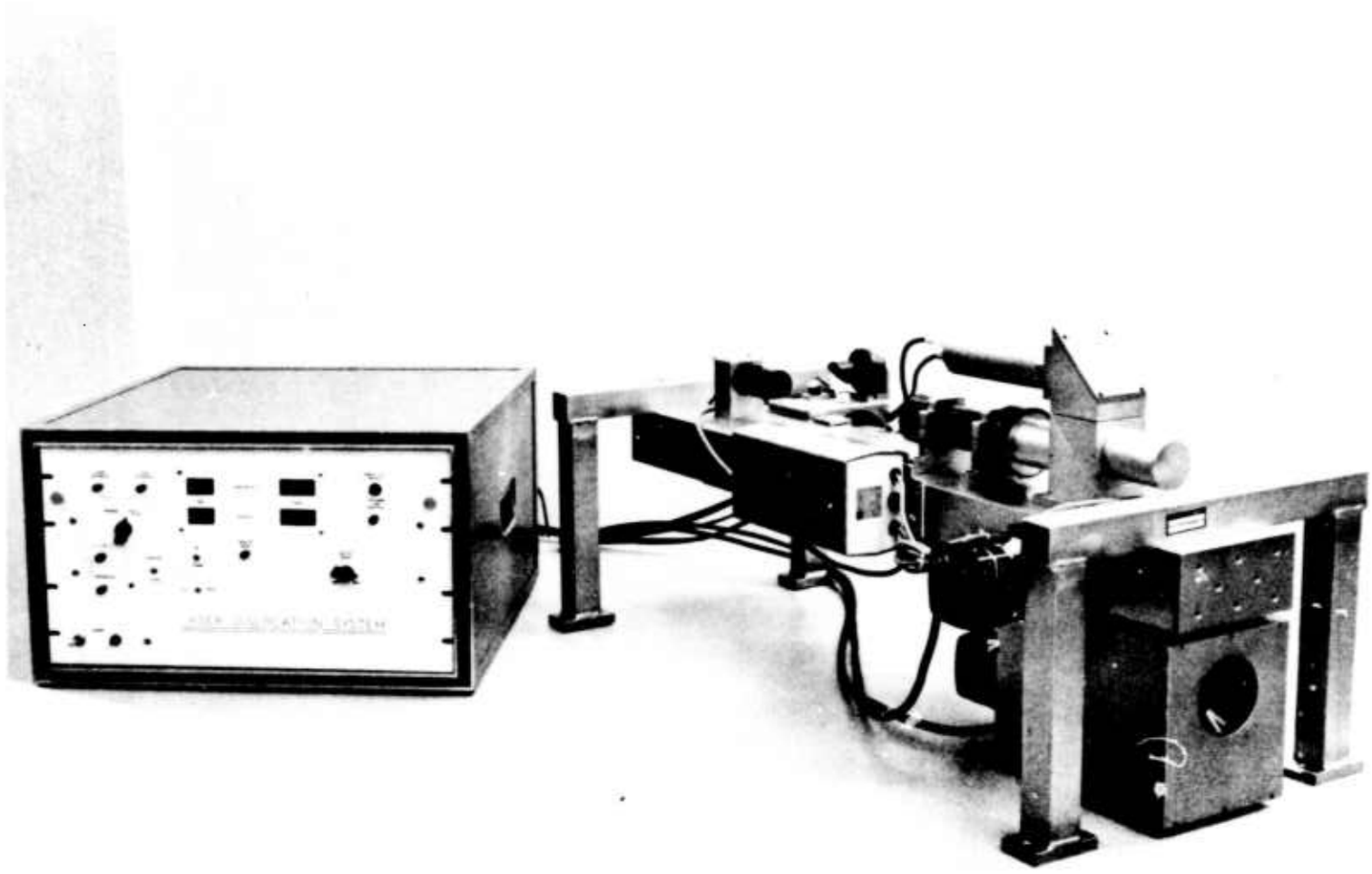

FIGURE A-10. Instrument Assembly (without cover) and Electronic Control Console

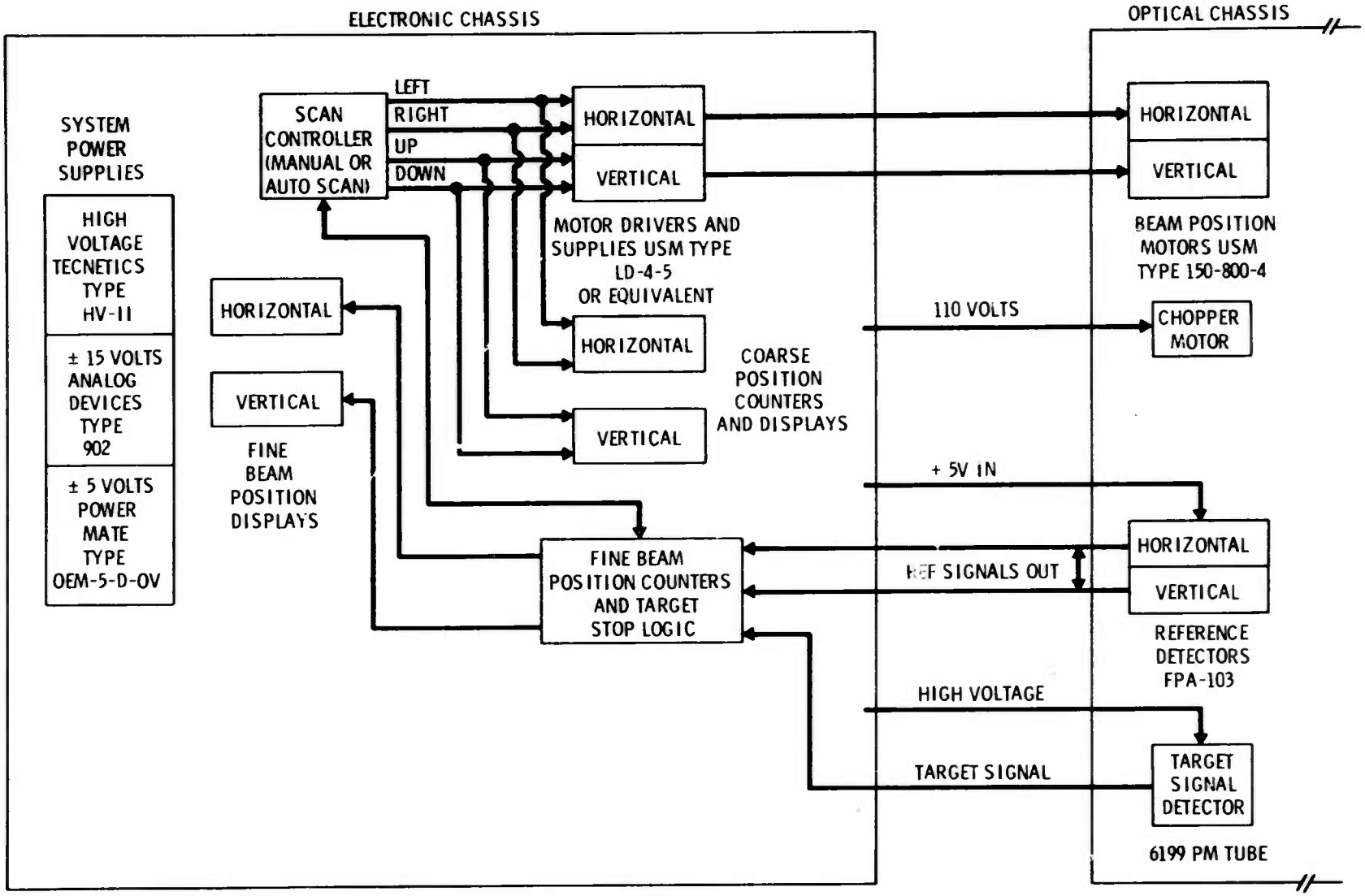

FIGURE A-11. Electronic Subsystem Block Diagram

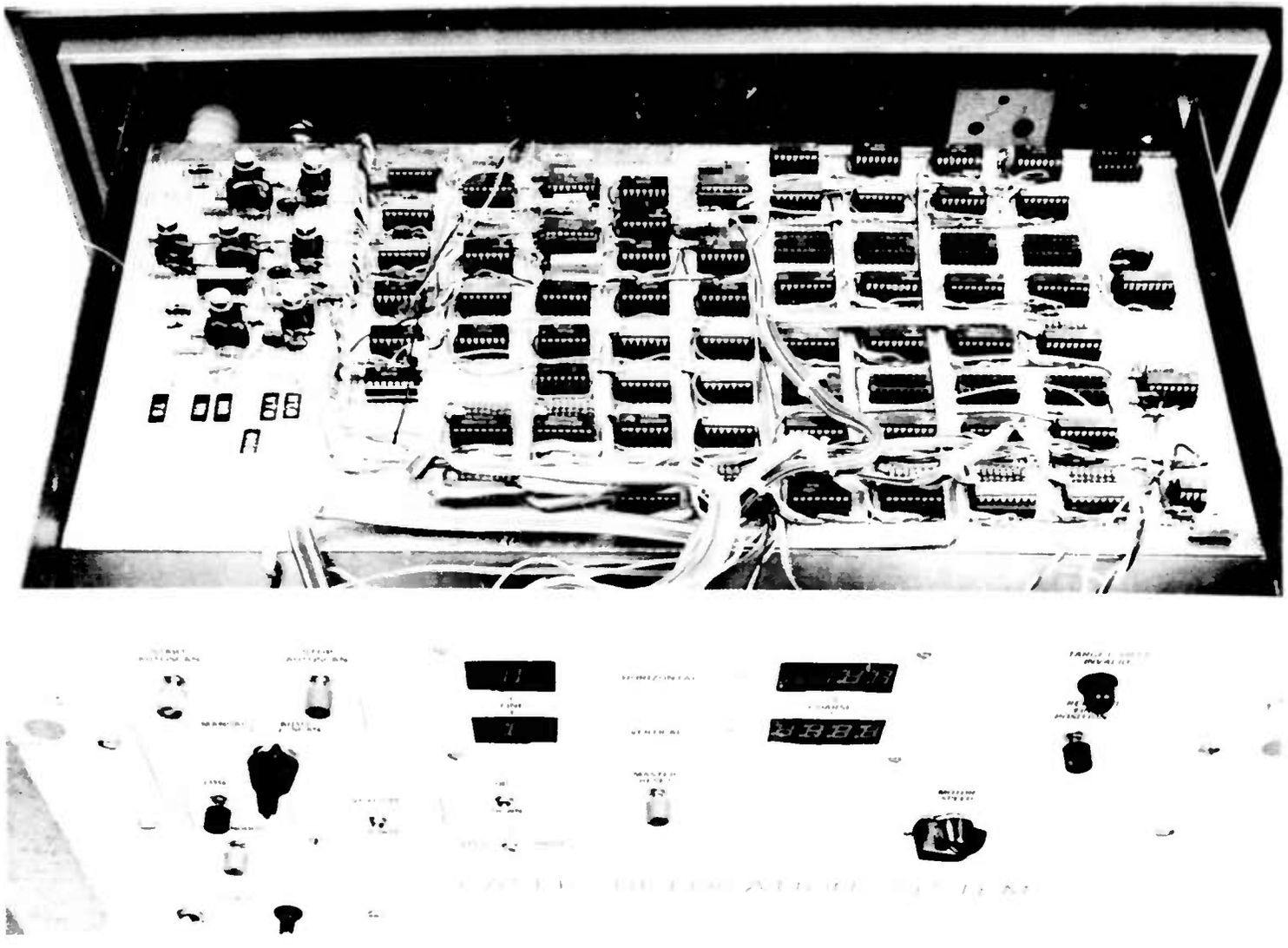

FIGURE A-12. Electronic Control Console with Top Cover Removed

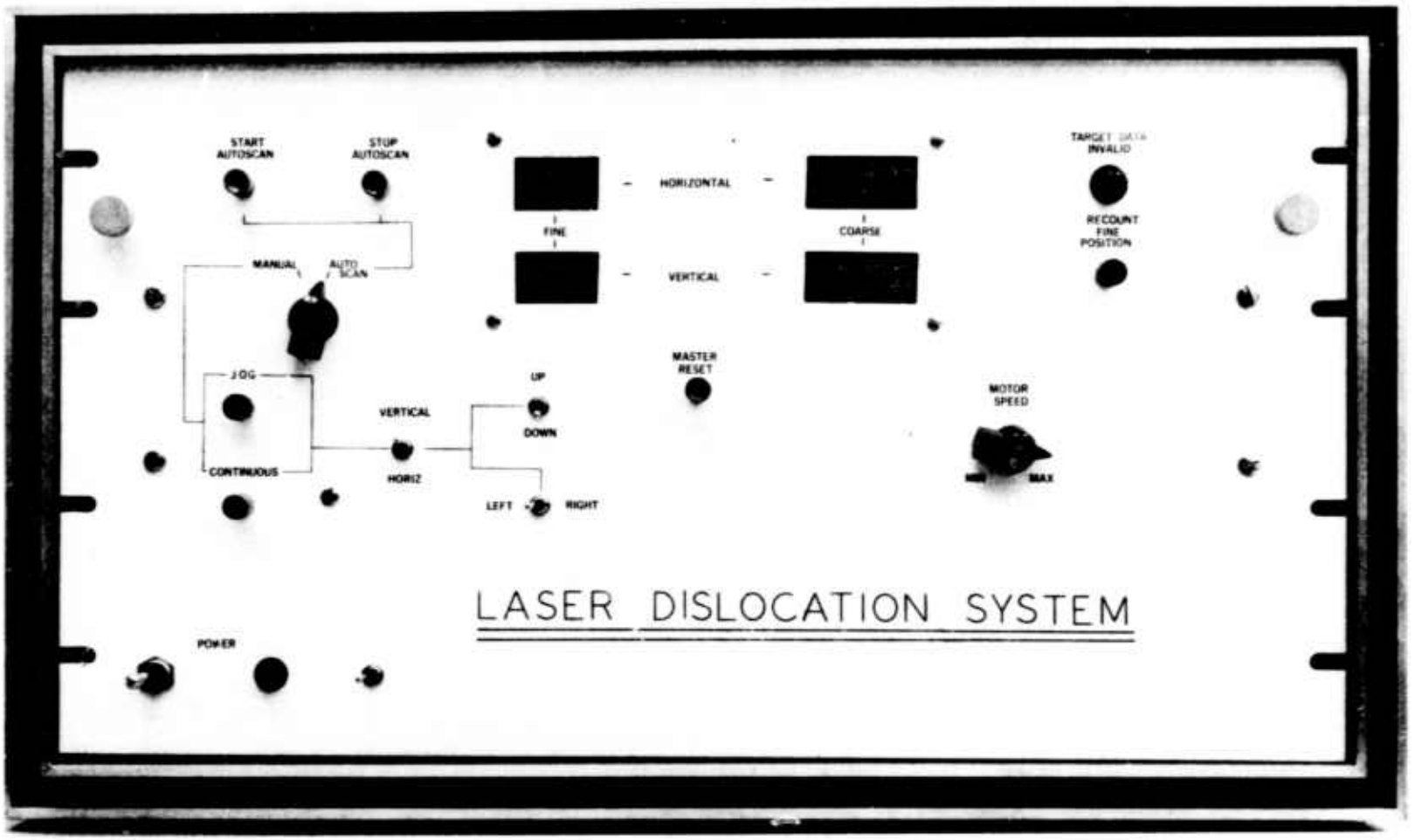

FIGURE A-13. Electronic Control Console, Front View

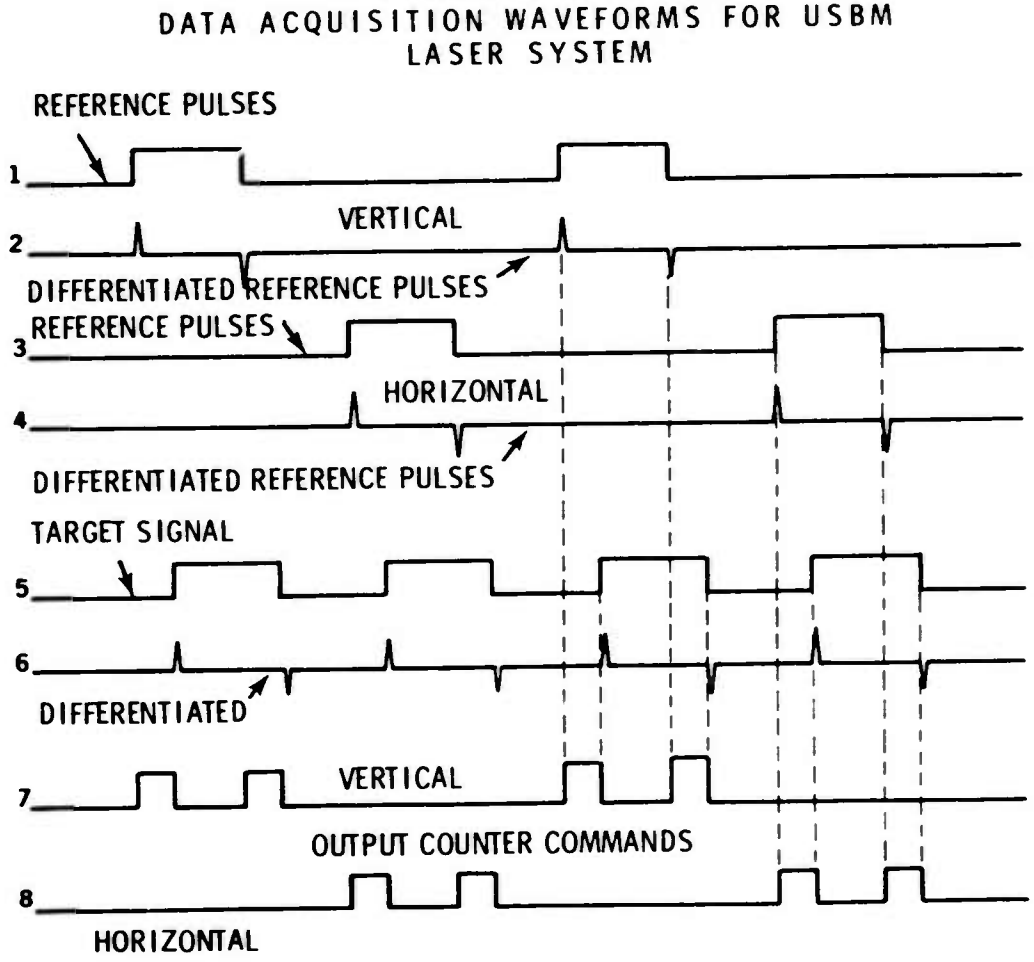

FIGURE A-14. Data Acquisition Waveforms for USBM Laser System

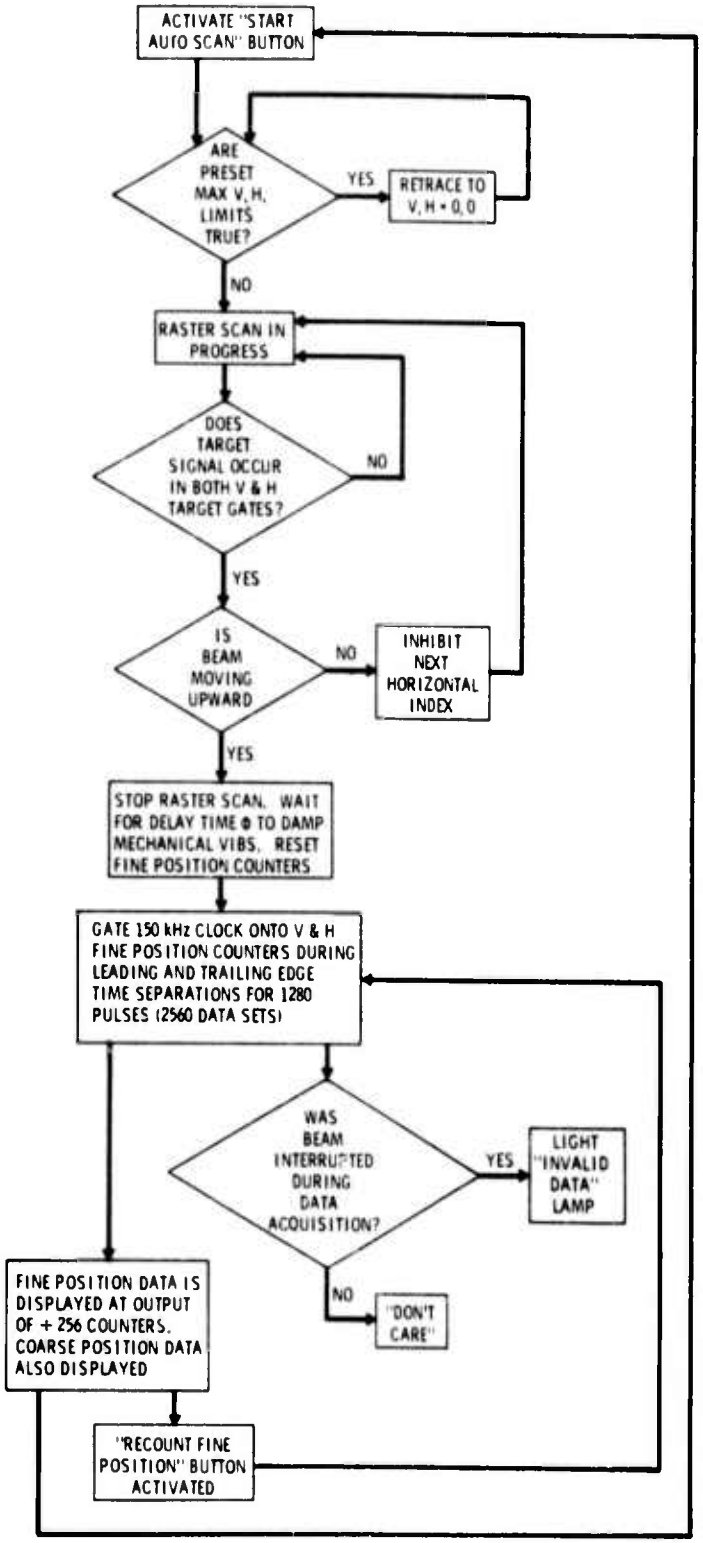

FIGURE A-15. Logic Flow Diagram for Raster Scan and Target Stop

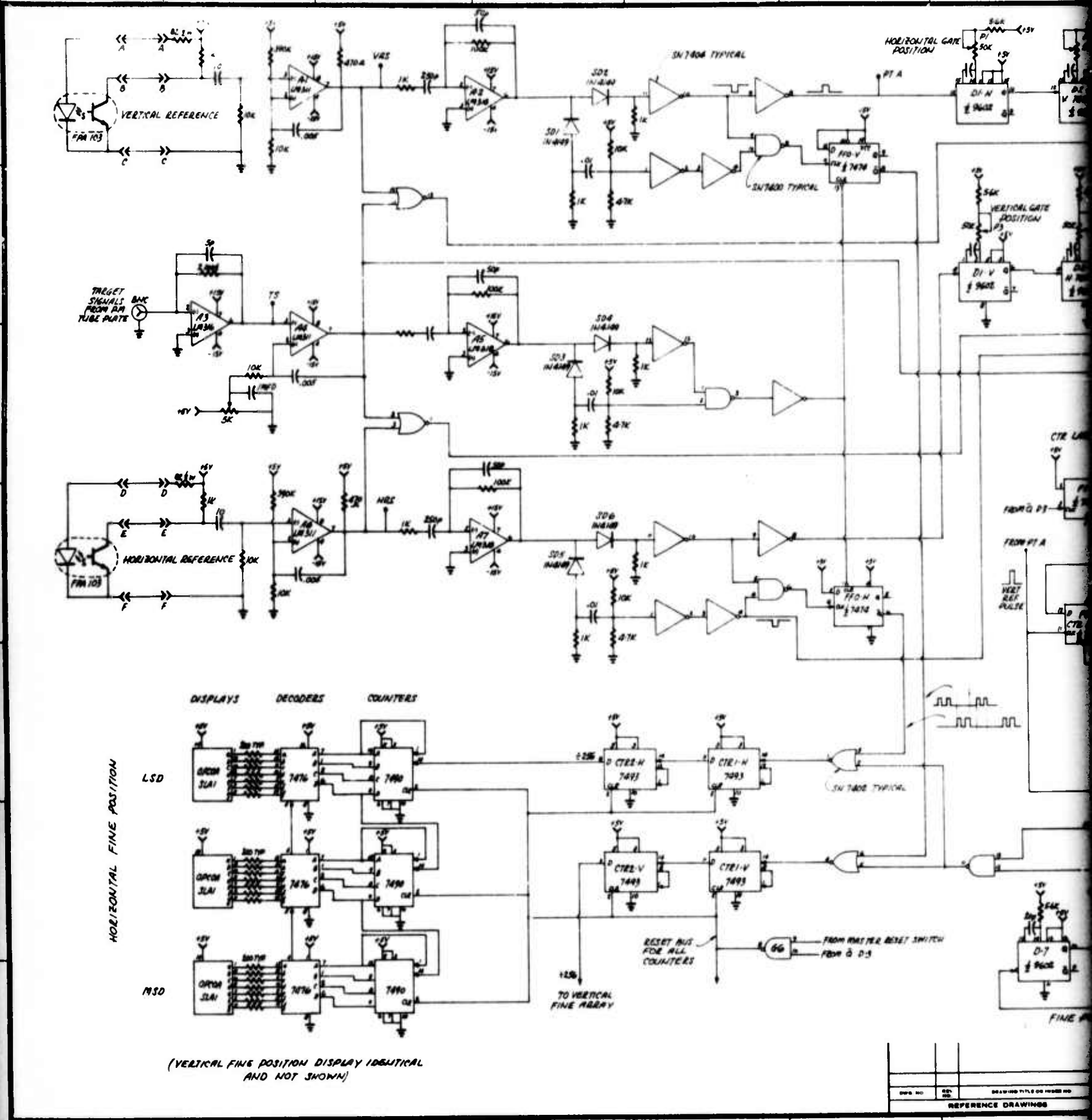

FIGURE A-16. Circuit Diagram of the Electronic Subsystem, Page 1

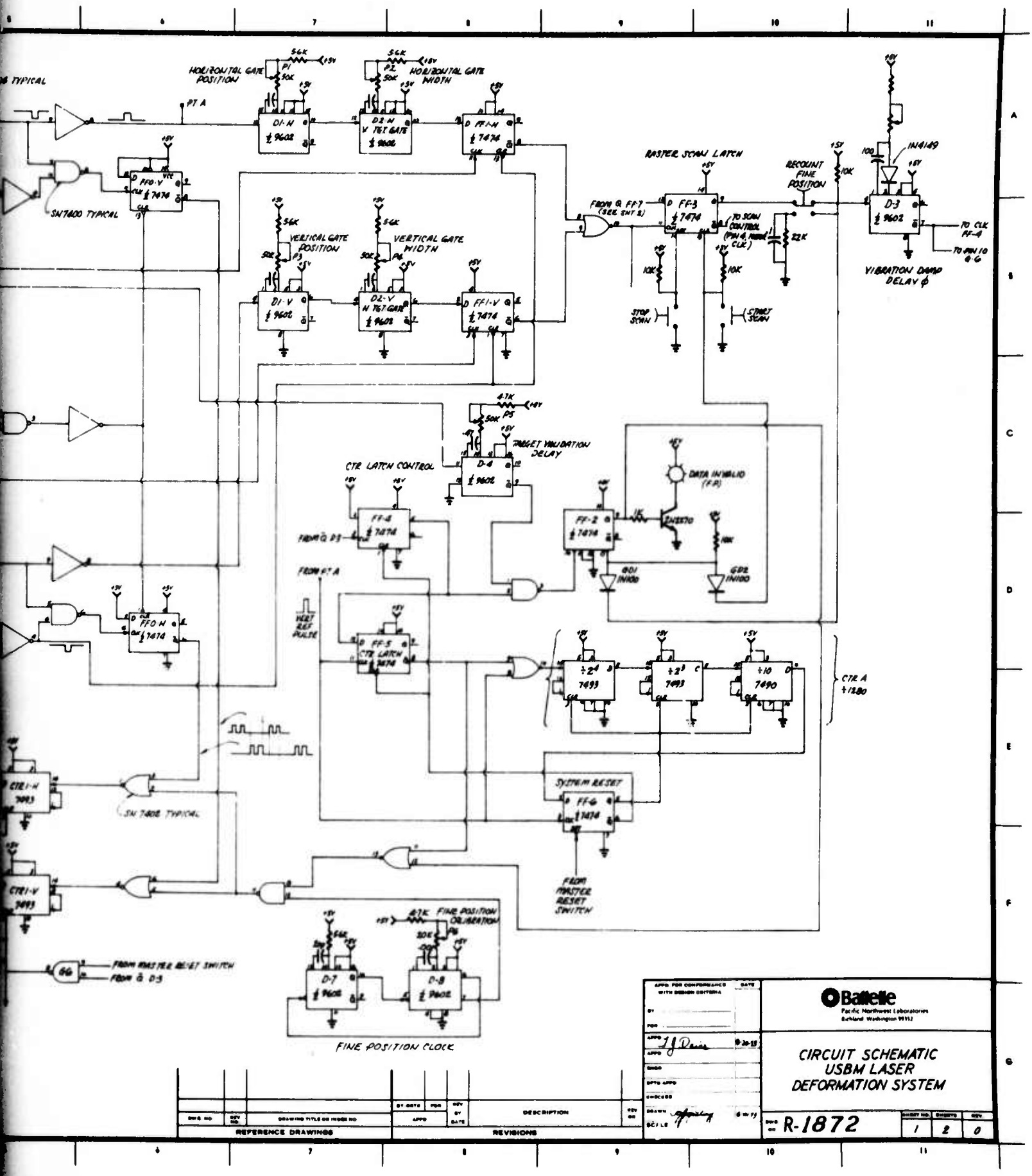
HORIZONTAL GATE POSITION
HORIZONTAL GATE WIDTH
VERTICAL GATE POSITION
VERTICAL GATE WIDTH
RASTER SCAN LATCH
RECOUNT FINE POSITION
VIBRATION DAMP DELAY
TARGET VALIDATION DELAY
CTR LATCH CONTROL
DATA INVALID (F.F.)
SYSTEM RESET
FROM MASTER RESET SWITCH
FINE POSITION CALIBRATION
FINE POSITION CLOCK
CTR A ÷1280
STOP SCAN
START SCAN
SN7400 TYPICAL
Battelle
Pacific Northwest Laboratories
Richland Washington 99352
CIRCUIT SCHEMATIC
USBM LASER
DEFORMATION SYSTEM
DWG NO R-1872
REFERENCE DRAWINGS
REVISIONS

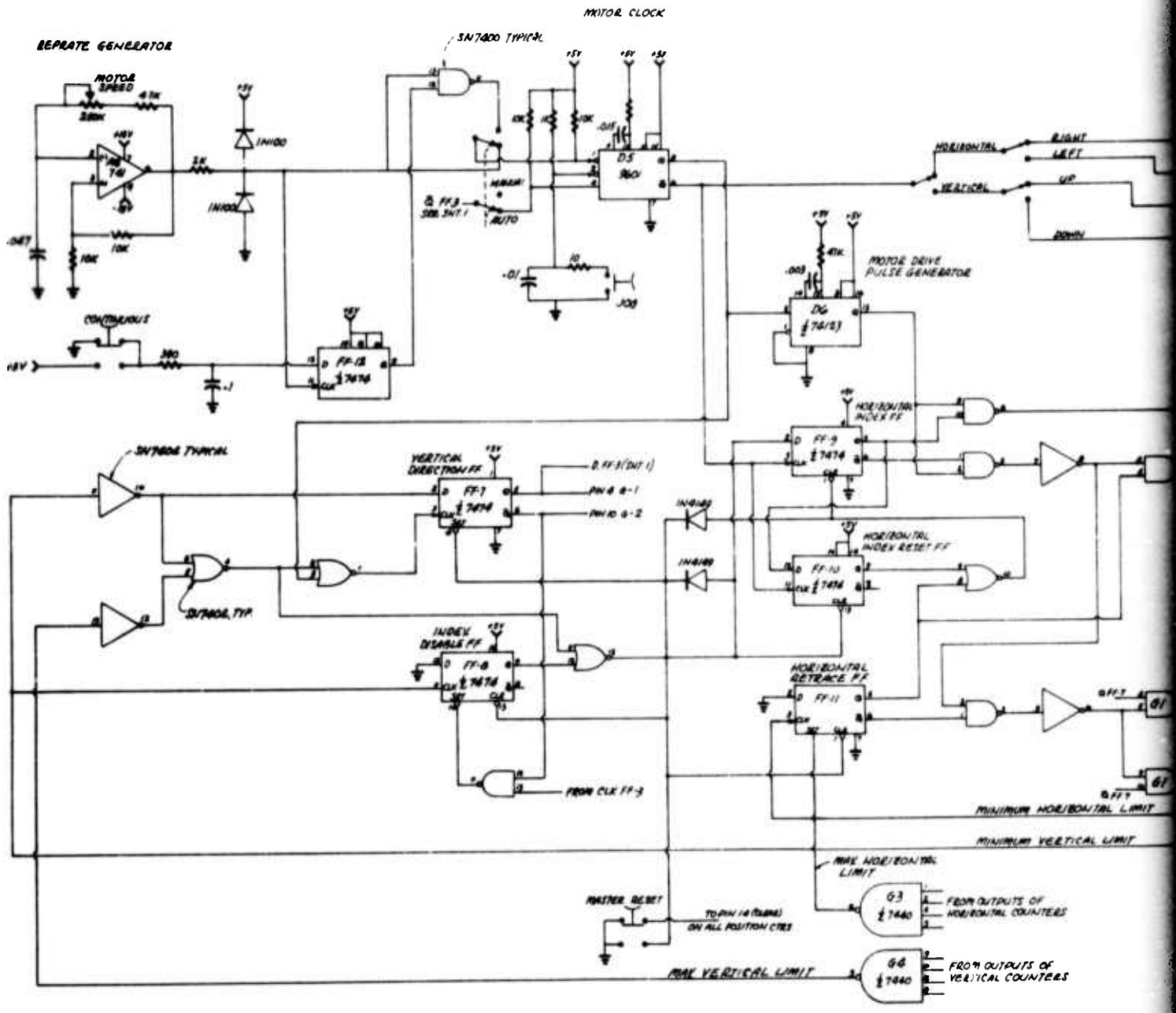

FIGURE A-17. Circuit Diagram of the Electronic Subsystem, Page 2

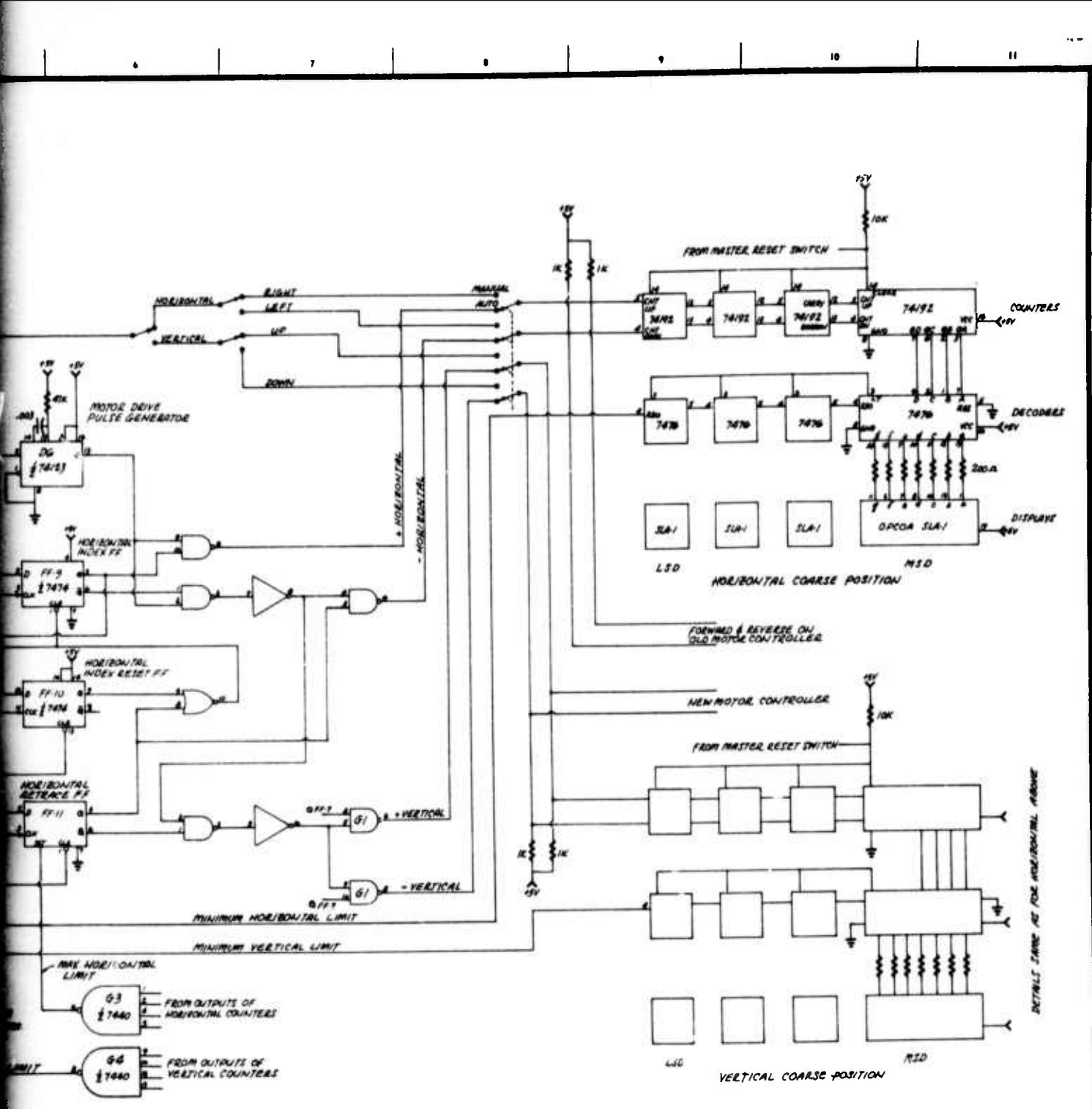

Battelle
Pacific Northwest Laboratories
Richland, Washington 99352

CIRCUIT SCHEMATIC USBM LASER DEFORMATION SYSTEM

DWG NO R-1872 | SHEET NO 2 | SHEETS 2 | REV 0

REFERENCE DRAWINGS

REVISIONS

DWG NO	REV NO	DRAWING TITLE OR MODEL NO

BY DATE	PDA	REV BY DATE	DESCRIPTION	REV NO
APPD				

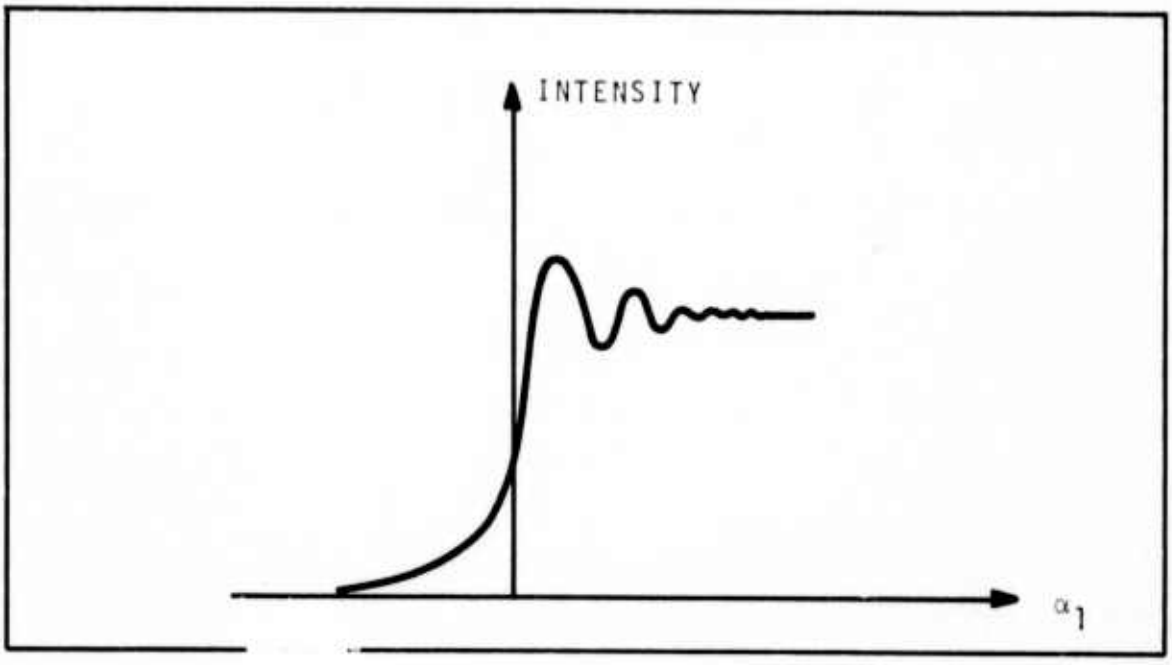

FIGURE A-18. Intensity Profile of the Image of an Edge

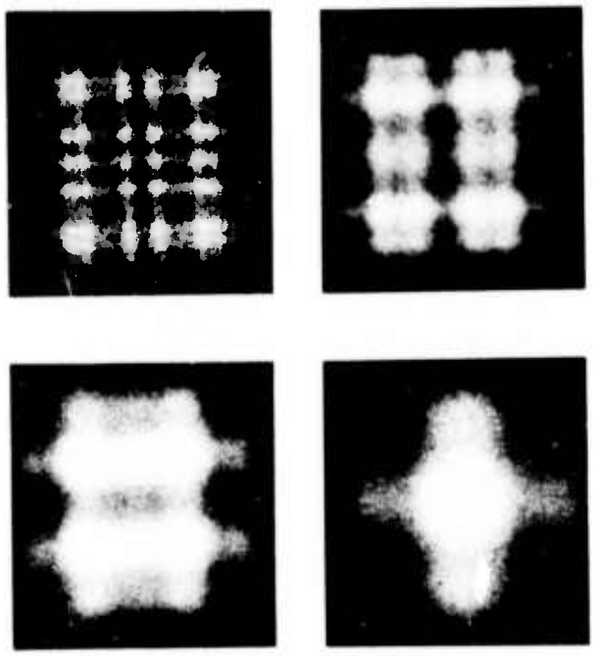

FIGURE A-19. Diffraction Pattern from an Edge

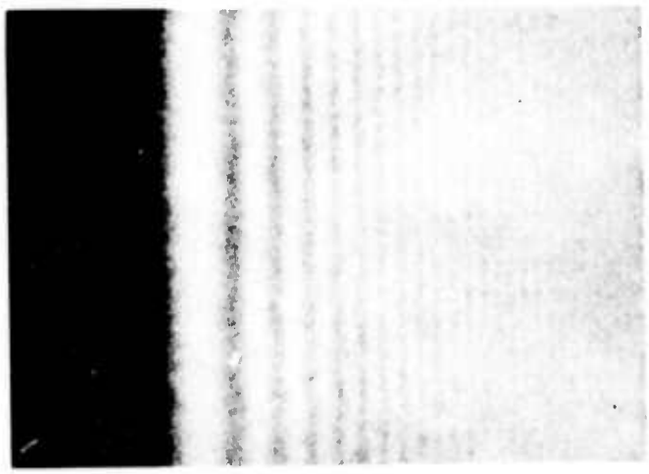

FIGURE A-20. Transition from a Fresnel to Fraunhofer Diffraction Pattern

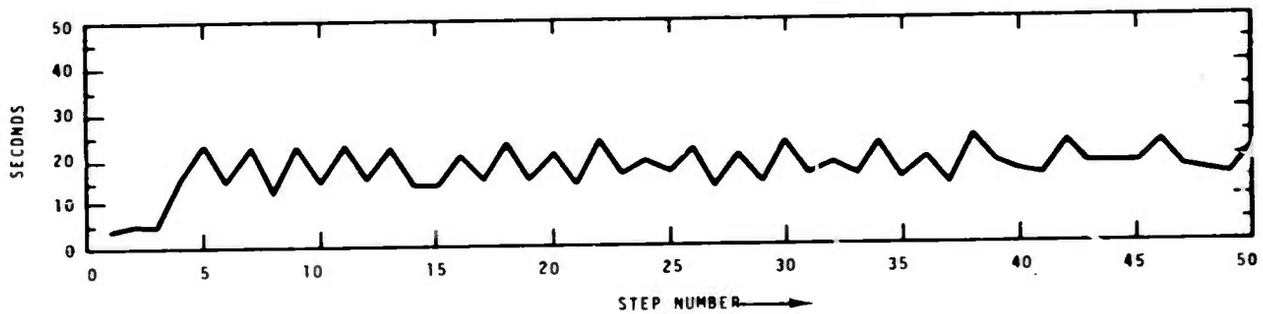

FIGURE A-21. Plot of Horizontal Step Sizes

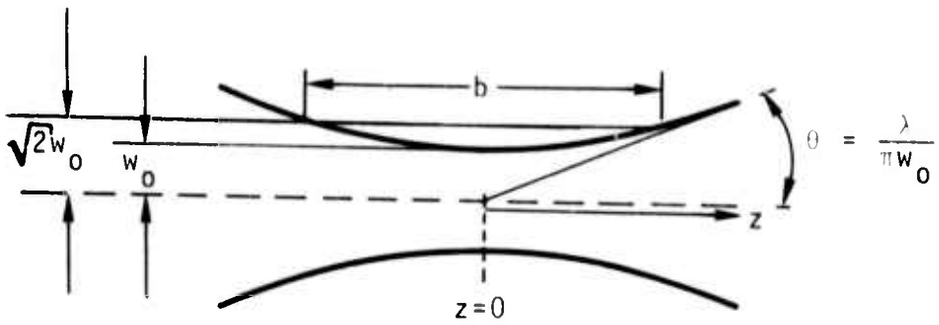

w_o THE MINIMUM BEAM RADIUS OR WAIST;

$w(Z)$ THE BEAM RADIUS AT ANY POINT;

$b = \frac{2\pi w_o^2}{\lambda}$ THE CONFOCAL PARAMETER

$$w^2(Z) = \frac{\lambda}{\pi} \frac{b}{2} \left[1 + \left(\frac{2Z}{b} \right)^2 \right],$$

$$R(Z) = Z \left[1 + \left(\frac{b}{2Z} \right)^2 \right].$$

FIGURE A-22. Schematic Representation of the Theoretical Reduction and Subsequent Expansion of the Projected Beam

APPENDIX B

DETAIL DESCRIPTION OF THE CONCEPTUAL DESIGN

This section explains the basic concept of the design and describes the functional performance of the system.

SYSTEM DESCRIPTION

Primary consideration for the system requirements were resolution, dynamic range and time response.

Since the targets could be located anywhere within an 8- by 10-degree field this meant that the whole field had to be scanned in a raster type scan mode. It was also necessary for the scanner to project a light source since the targets could not require power.

The 0.015 in. resolution at 300 ft set other requirements. At 300 ft the 8- by 10-degree feed is 41.9561 by 52.4932 ft or 503.473 by 629.918 in. If each number is divided by 0.015, there are 33,564.9 by 41,994.5 resolution elements in the whole raster for a total of 1,409,312 resolution elements. This is approximately equal to 1.4×10^{9}. There are 300 sec in the 5 min required to scan the raster. This means that each resolution element must be scanned in $\sim 2 \times 10^{-7}$ sec. This is beyond the time response of most electronic systems by about two orders of magnitude. This problem also gives rise to other fundamental considerations, such as the size of the light source at 300 ft, the size of the target, the resolution of the optics, diffraction effects and the effects of the atmosphere.

The following shows how these problems are reduced by using two scanners. One scanner scans a 1-in. beam over the field of targets. When a target is located with the 1-in. beam, the first scanner stops. The second scanner now has to scan the 1-in. beam to accurately locate the target within the 1-in. area.

The first problem is the time response. Since one scanner cannot scan the 8- by 10-degree field in 5 min with a resolution of 0.015 in. at 300 ft, then use two scanners. Let the raster scanner have a coarse

resolution governed by the capabilities of the scanning mechanisms and the electronic time responses. Once the target has been located with the scanner that has coarse resolution, it is then necessary to have another scanner which has finer resolution in order to determine the target location to within 0.015 in. Time response of the second scanner is still a problem so it will be necessary for the coarse resolution scanner to stop while the fine resolution scanner scans. In order for the second scanner to have high resolution and moderate time responses it must have a small field of view. It also must have some sort of x-y scanning action to determine the deflection of the target in the direction normal to the mounting surface. Thus, it was concluded that two scanners would satisfy the requirements--a fine resolution scanner contained in or coupled to a coarse resolution scanner.

A laser was chosen for the source. The primary characteristic of the laser that is used in the application is the ability to project the source great distances without any significant spreading. A HeNe laser of about 5 mW seemed adequate. The target should be an efficient reflector such as a retroreflector. One of the best type of retroreflectors is the corner cube prism which looks like the corner of a cube or a three sided pyramid. These will send the light back in the same direction at which it entered with very little degradation or spreading. Because of the small amount of light available in the laser beam, it is necessary to keep the size of the beam as small as the coarse resolution scanner will allow and to make the target as large as the fine resolution scanner will allow. Thus far, the descisions have been logical and easy to justify. The hard part is to design the two scanners.

For the coarse resolution raster scanner it seemed that two very accurate stepping motors could be made to rotate a mirror in two orthogonal directions to produce the raster. The right combination of gearing, stepping size and stepping speed could be chosen to make the scanner function according to the requirements.

The fine resolution scanner is an innovation and as far as we know it is a completely different concept that was developed by Battelle-Northwest for the USBM. It is partly an object space scanner and partly a reticle type scanner and has not been categorized as yet.

The scanner can best be described as follows: Let the laser pass through a beam expander such that the beam is about 1.5 in. in diameter. Since we are working with rectangular coordinates, place a square aperture over the beam expander. The beam is now about 1 in. on a side. Focus the expander so that the beam is as near 1 in. as possible at 300 ft. Place the beam on the target as shown in Figure B-1.

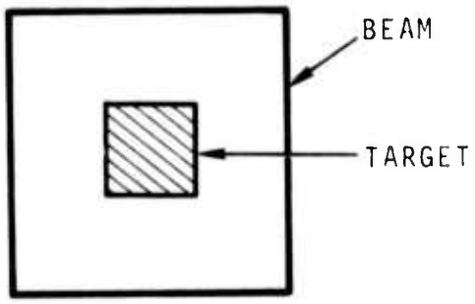

FIGURE B-1. Laser Beam on Target

The target also has a square aperture and it is about 1/4 in. on a side. As long as light is striking the target, the detector is receiving light from the target by retroreflection. We know where the beam is from the output of the raster scanner but now we do not know where the target is in the beam. Suppose we now take a 1-in. blade and place it above the aperture of the beam expander. As the blade is lowered into the beam, the beam at the target location also gets blocked as in Figure B-2.

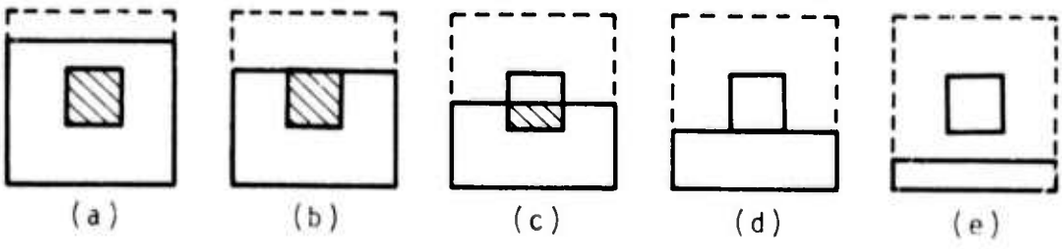

FIGURE B-2. Laser Beam on Target Being Blocked Out Vertically

If we measure how far we moved the blade into the beam when the signal from the target dropped by 50%, then we can obtain the vertical position of the target with respect to the beam. If the blade is exactly 1 in. wide, then we can keep moving the blade past the aperture until the signal from the target reaches the previous 50% level again. This gives a check on our position reading one allows for better averaging. Now, if the blade is rotated 90° to a vertical direction and placed along side the beam expander aperture we can move the blade across the beam in a horizontal direction to find the horizontal position of the target in the beam. If we are looking for 0.015 in. accuracy out of a 1 in. aperture, this is only 1 part of the 67, or 1.5% of the total dynamic range. This seems to be well within the accuracies attainable with present day electronics.

FINE RESOLUTION SCANNER

The above describes what is performed in the system functionally. The following describes the method we used in the prototype to produce the desired effect of the horizontally and vertically moving blades.

To reduce the problems associated with synchronizing two choppers, a system was needed which used one chopper to perform both chopping actions. The size of the chopper and the width of the blades were chosen to make it convenient to machine. The size of the beam at the chopper can be controlled by the appropriate use of beam expanders. Figure B-3 shows one way of performing the chopping action. Slots are machined in the sides of a cylinder. A beam splitter is used to separate the laser beam into two equal parts. One part of the beam is reflected out the side of the cylinder through the first set of slots and the other beam passing through the beam splitter strikes a mirror and is reflected up through the second set of slots. The open-to-close ratio of the slots is 1 to 3 and there are an even number of slots around the cylinder (6). Thus, when the side beam is passing through the slot the top beam is blocked and only one beam is illuminating the target at a time.

When light strikes a reflecting surface the image is inverted. By orienting the mirrors in certain directions it is possible to rotate an image to any desired direction (similar to the use of poro prisms in a pair

of binoculars). In Figure B-3 the orientation of a character, F, is shown after each reflection along the path of the reflected beam at the first beam splitter. The chopping action is also shown by the arrow. By tracing the arrow through each reflection, we see that the chopping action of this beam is in the horizontal direction.

Similarly in Figure B-4, we see the orientation of the character F as it follows the beam that is transmitted through the first beam splitter. The chopping action of this beam is also shown by the arrow. By following the orientation of this arrow, we see that the chopping action of this beam is in the vertical direction.

Figure B-5 shows the combined action of separating the beams at the first beam splitter and then recombining the beams at the second beam splitter. Fifty percent of each beam is lost when combining the two beams at the second beam splitter.

RASTER SCANNER

Figure B-6 shows how the output of the fine resolution scanner is expanded and shaped by the aperture mask then folded down to the raster scanning mirror. The mirror is located in a box-type assembly. The box is attached to a hub which passes through a worm gear assembly. A stepping motor is attached to the worm and rotates the box assembly about a vertical axis. This causes the beam to be scanned in the horizontal direction, 360° if necessary.

Vertical scanning is produced by having the mirror attached to a horizontal axis of rotation. A tangent arm is attached to the mirror mount and the nut on a linear screw. A stepping motor attached to the screw will rotate the screw and drive the nut in a linear motion tangent to circle of rotation of the mirror. This tilting action of the mirror causes the beam to be scanned in the vertical direction. Thus, by the combined action of the horizontal and vertical scanner a rectangular raster pattern can be easily generated. The resolution of the raster scanner is roughly 1 in. or the size of the laser beam being projected out to the target.

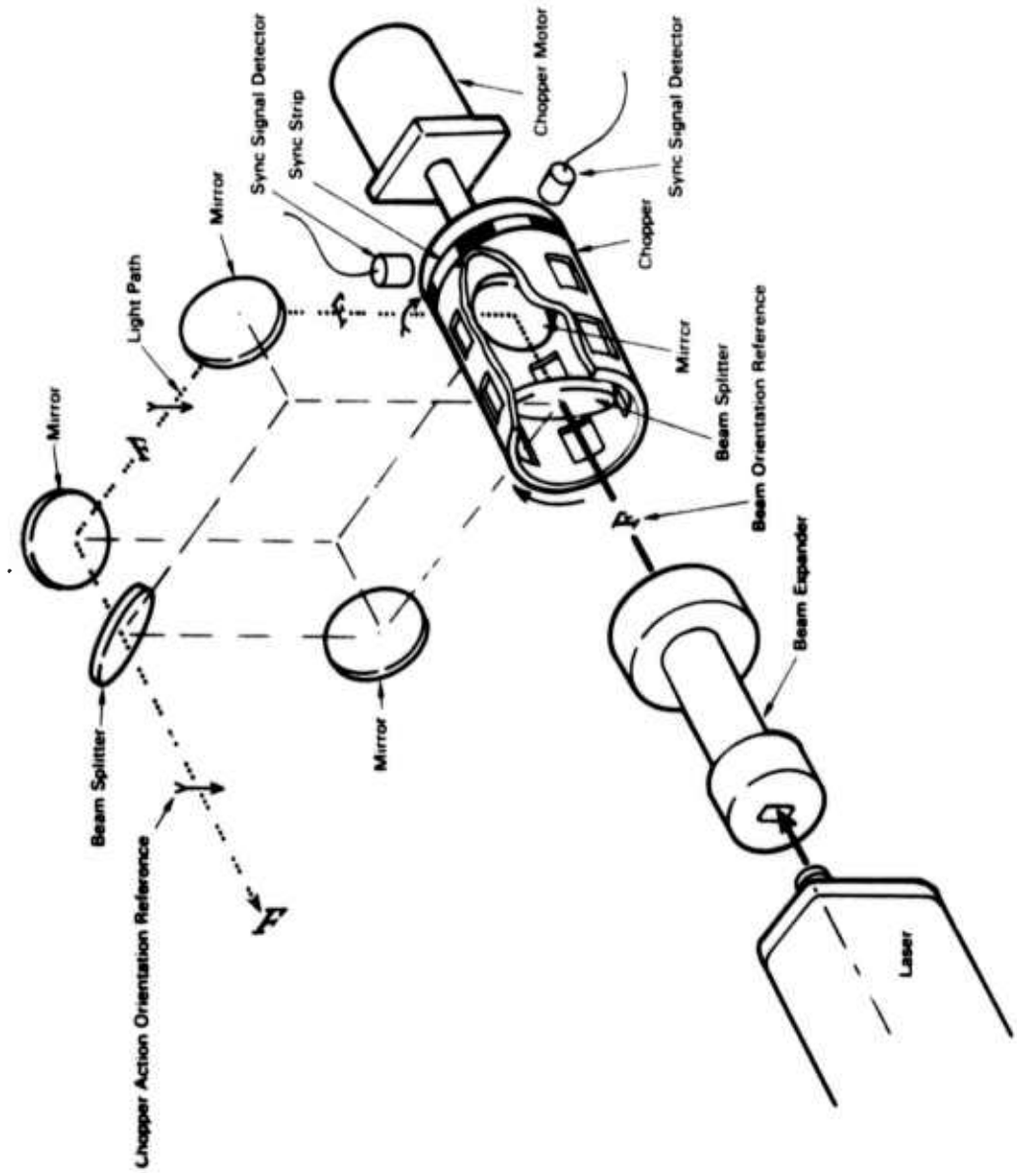

FIGURE B-4. Vertically Chopped Beam

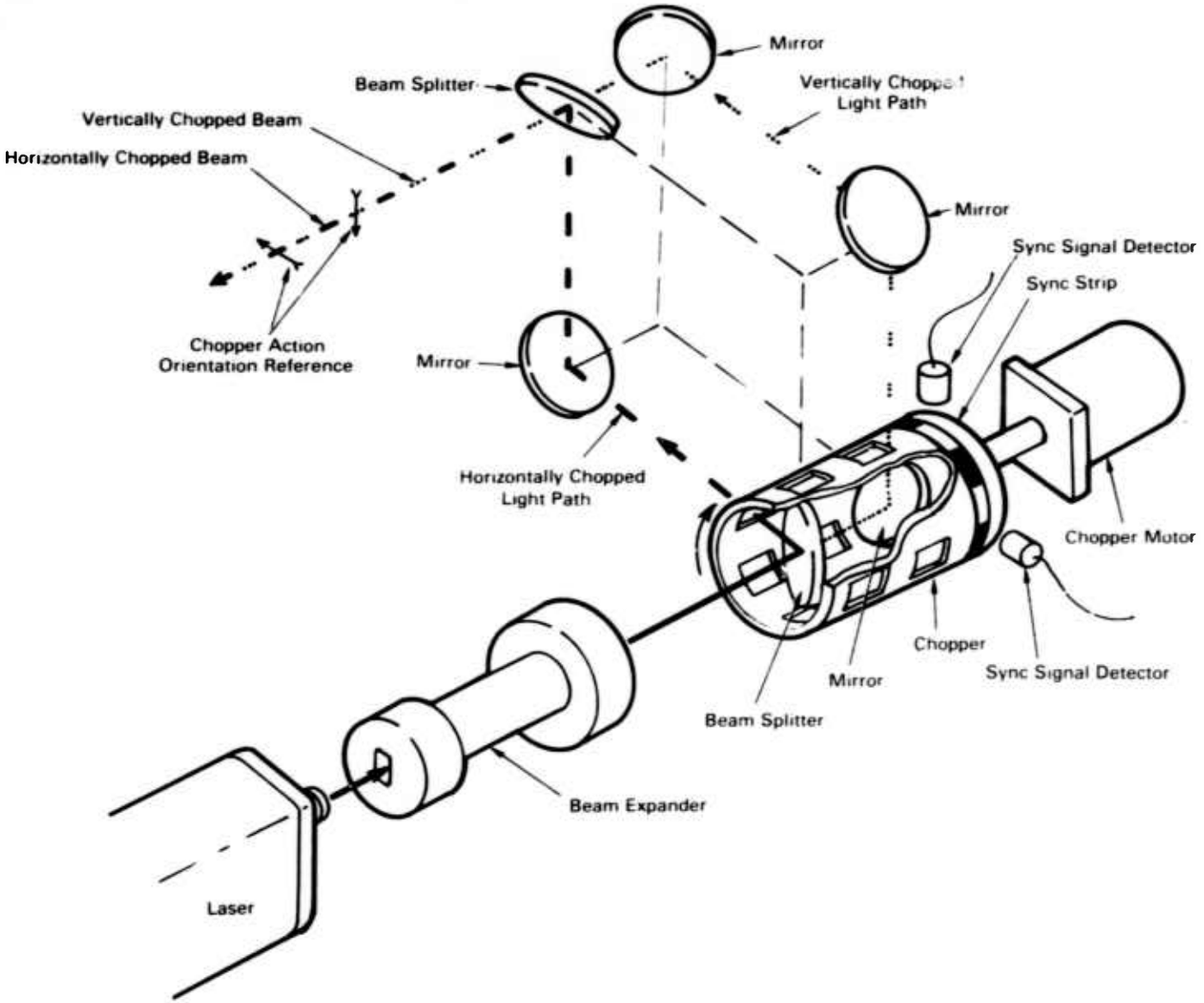

FIGURE B-5. The Combined, Alternating, Horizontally and Vertically Chopped Beam

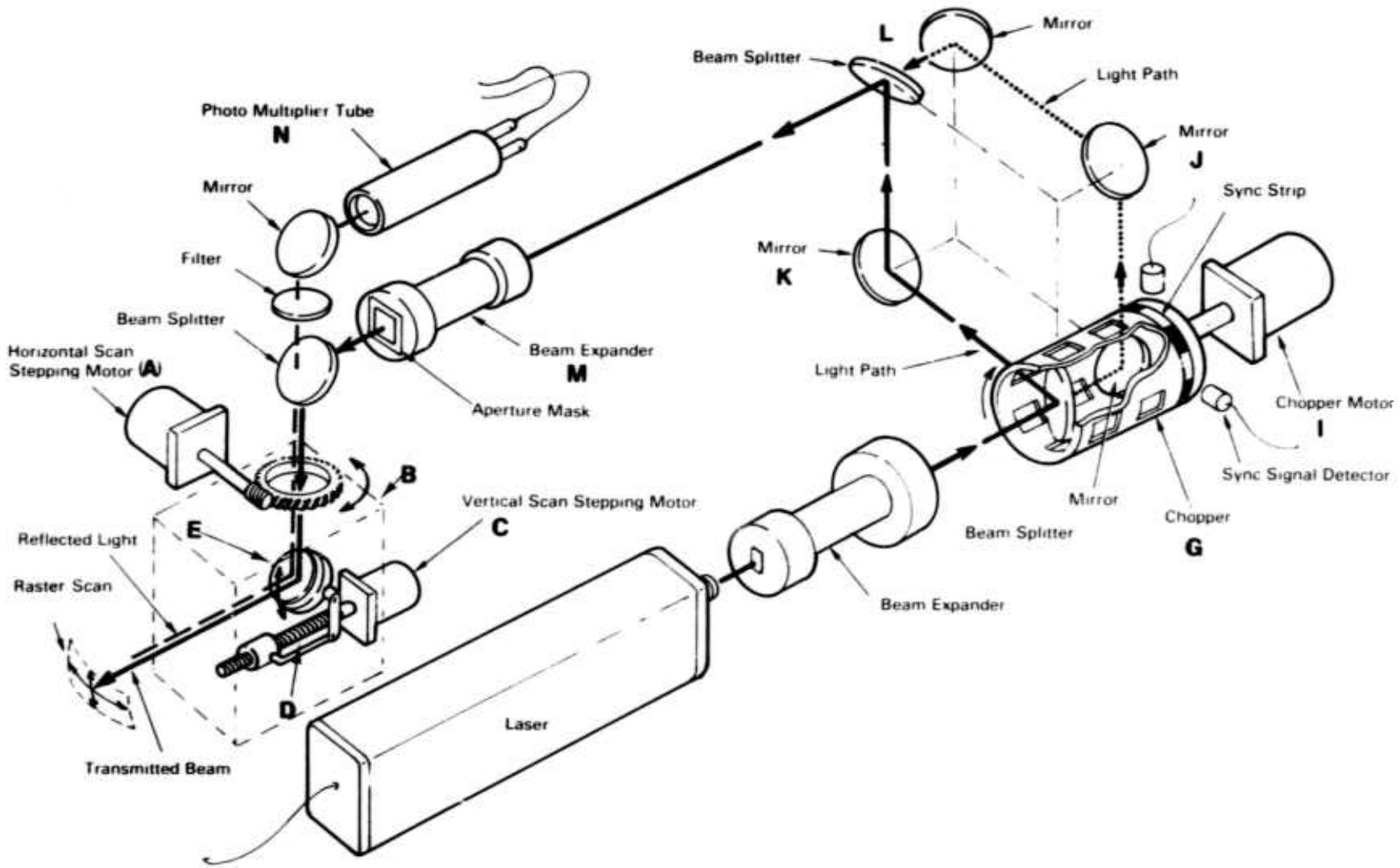

FIGURE B-6. Schematic Diagram of Laser System

Figure B-6 shows the path of the reflected light passing back through the system transmitting through the beam splitter, the narrow-band-pass filter reflecting off the folding mirror and striking the photomultiplier tube.

The electronics (the logic used for control and the synchronizing singals on the chopper) are described in the section on the electronics.

ACKNOWLEDGMENTS

We would like to express our appreciation to the U.S. Bureau of Mines, especially Mike Beus, for assistance in planning, organizing, and completing the Laser System demonstration at their Test Audit near Spokane, WA.

Laser System Project Organization

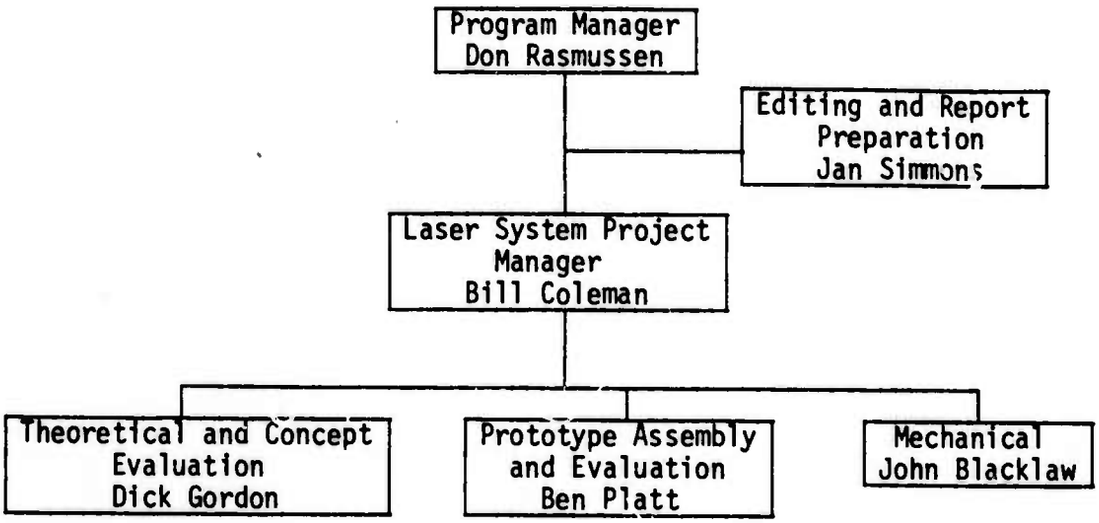

The following invention disclosures were transmitted to the sponsor under the subject contract:

OSIR-74 (MIN-1913) A Modulated Displacement Indicator
J. T. Russell

OSIR-75 (MIN-1914) An Internal Displacement Reference
J. T. Russell

A U.S. patent application was filed on the subject matter of OSIR-74, and we have been advised that a patent will issue for this invention, identified as "Measuring Apparatus for Spatially Modulated Reflected Beams".

A U.S. patent application was also filed on the subject matter of OSIR-75, identified as "Angular Deviation Measuring Device and its Method of Use". Prosecution of the patent application is continuing.

PUBLIC DISPLAYS AND PUBLICATIONS

- Contract review meeting and demonstration, Spokane Mining Research Center Test Audit, July 12, 1973