AD-773 832

AN INTERFACE TO THE ARPA NETWORK FOR THE CP/CMS TIME-SHARING SYSTEM. VOLUME II. FLOW CHARTS

Joel M. Winett, et al

Massachusetts Institute of Technology

Prepared for:

Electronic Systems Division
Advanced Research Projects Agency

28 November 1973

DISTRIBUTED BY:

NTIS

National Technical Information Service
U. S. DEPARTMENT OF COMMERCE
5285 Port Royal Road, Springfield Va. 22151

DISCLAIMER NOTICE

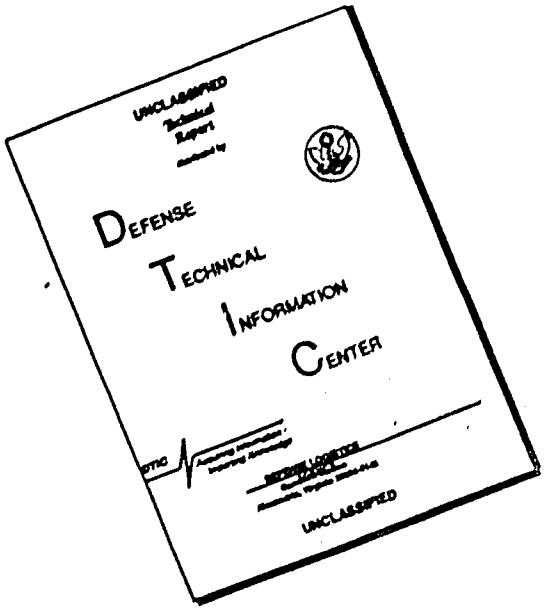

THIS DOCUMENT IS BEST QUALITY AVAILABLE. THE COPY FURNISHED TO DTIC CONTAINED A SIGNIFICANT NUMBER OF PAGES WHICH DO NOT REPRODUCE LEGIBLY.

UNCLASSIFIED
Security Classification

AD 773 832

DOCUMENT CONTROL DATA - R&D

(Security classification of title, body of abstract and indexing annotation must be entered when the overall report is classified)

1. ORIGINATING ACTIVITY *(Corporate author)* Lincoln Laboratory, M.I.T.	2a. REPORT SECURITY CLASSIFICATION Unclassified 2b. GROUP

3. REPORT TITLE

An Interface to the ARPA Network for the CP/CMS Time-Sharing System – Volume II: Flow Charts

4. DESCRIPTIVE NOTES *(Type of report and inclusive dates)*

Technical Note

5. AUTHOR(S) *(Last name, first name, initial)*

Winett, Joel M. and Sammes, Anthony J.

6. REPORT DATE 28 November 1973	7a. TOTAL NO. OF PAGES 174	7b. NO. OF REFS 0
8a. CONTRACT OR GRANT NO. F19628-73-C-0002 b. PROJECT NO. ARPA Order 600 c. d.	9a. ORIGINATOR'S REPORT NUMBER(S) Technical Note 1973-50 – Vol. II 9b. OTHER REPORT NO(S) *(Any other numbers that may be assigned this report)* ESD-TR-73-337	

10. AVAILABILITY/LIMITATION NOTICES

Approved for public release; distribution unlimited.

11. SUPPLEMENTARY NOTES Supplement to ESD-TR-73-336	12. SPONSORING MILITARY ACTIVITY Advanced Research Projects Agency, Department of Defense

13. ABSTRACT

The interface to the ARPA network consists of a Network Control Program (NCP) which handles Host to Host communications, a LOGGER/SERVER for providing access to a CP virtual machine from the network, and a user subroutine package for communicating with other Hosts on the network from a logged on CP virtual machine operating in the CMS environment. The NCP and the LOGGER each run in separate virtual machines; the NCP handling the I/O operations with the IMP and the LOGGER handling pseudo I/O operations with CP through a software supported virtual terminal device. CMS virtual machines communicate with the NCP virtual machine through a special virtual machine to virtual machine communications facility.

Volume I describes the routines which make up the NCP and the LOGGER. Volume II includes flow charts on the logic for each of these routines.

Reproduced by
NATIONAL TECHNICAL
INFORMATION SERVICE
U S Department of Commerce
Springfield VA 22151

14. KEY WORDS

ARPA network
time-sharing system
IBM 360/67
virtual machines

UNCLASSIFIED
Security Classification

MASSACHUSETTS INSTITUTE OF TECHNOLOGY

LINCOLN LABORATORY

AN INTERFACE TO THE ARPA NETWORK FOR THE CP/CMS TIME-SHARING SYSTEM VOLUME II: FLOW CHARTS

J. M. WINETT
A. J. SAMMES
Group 28

TECHNICAL NOTE 1973-50

28 NOVEMBER 1973

DDC
FEB 4 1974
B

Approved for public release; distribution unlimited.

LEXINGTON MASSACHUSETTS

A

The work reported in this document was performed at Lincoln Laboratory, a center for research operated by Massachusetts Institute of Technology. This work was sponsored by the Advanced Research Projects Agency of the Department of Defense under Air Force Contract F19628-70-C-0230 (ARPA Order 600).

This report may be reproduced to satisfy needs of U.S. Government agencies.

Table of Contents

Volume II: Flowcharts

A. NCPINIT Flowchart

B. NCPMAIN Flowchart

C. NCPXFER Flowchart

D. NCPIMPI Flowchart

E. NCPIMPC Flowchart

F. NCPMONIT Flowchart

G. LOGMAIN Flowchart

H. LOGDEV Flowchart

I. LOGST Flowchart

These flowcharts have been produced from the source code using the AUTOFLOW Computer Documentation System written by Applied Data Research, Inc. and run on the IBM 360/67 computer at Lincoln Laboratory.

CHART TITLE - 'INITIALISING ROUTINES'

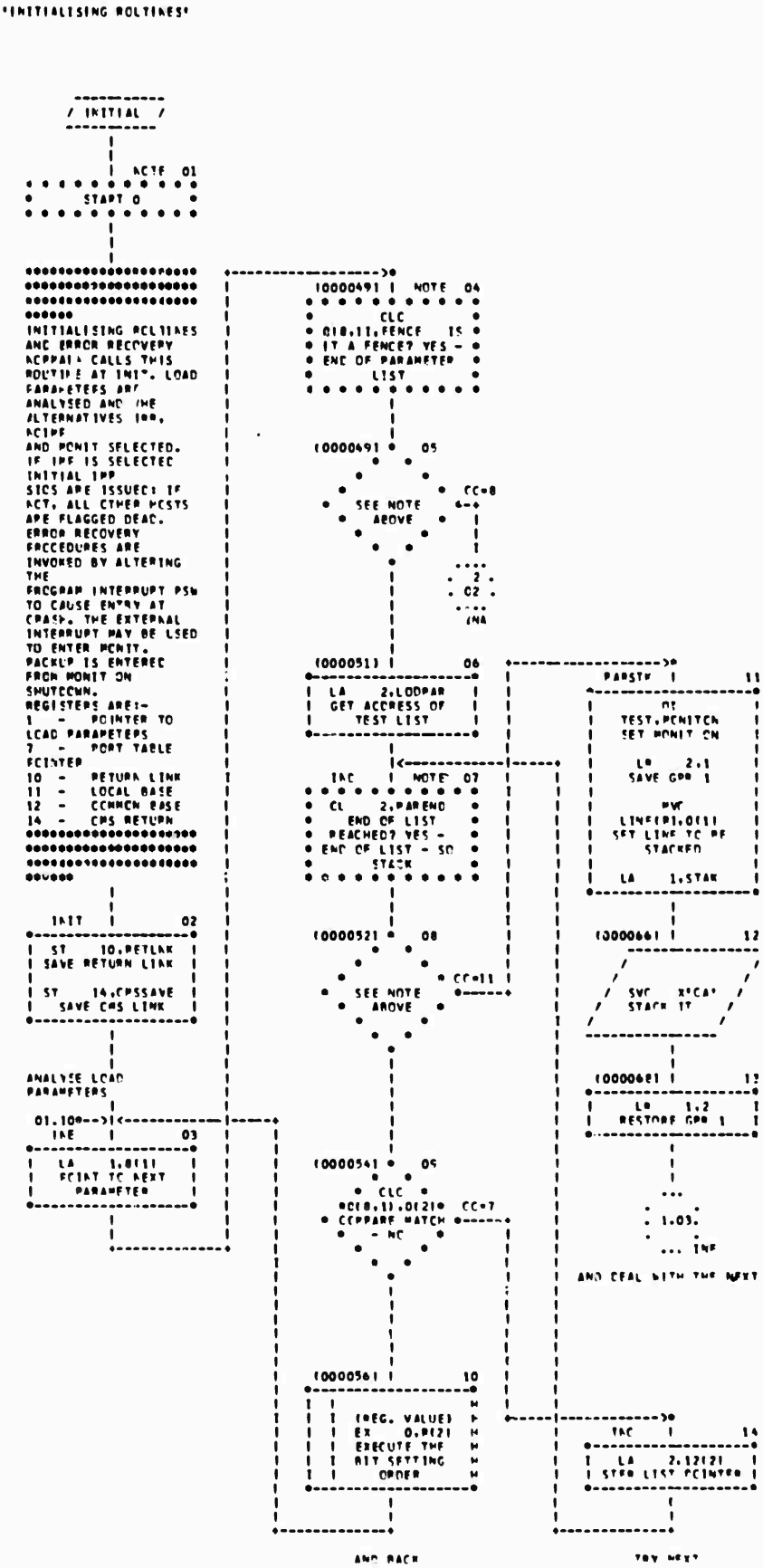

CHART TITLE - 'INITIALISING ROUTINES'

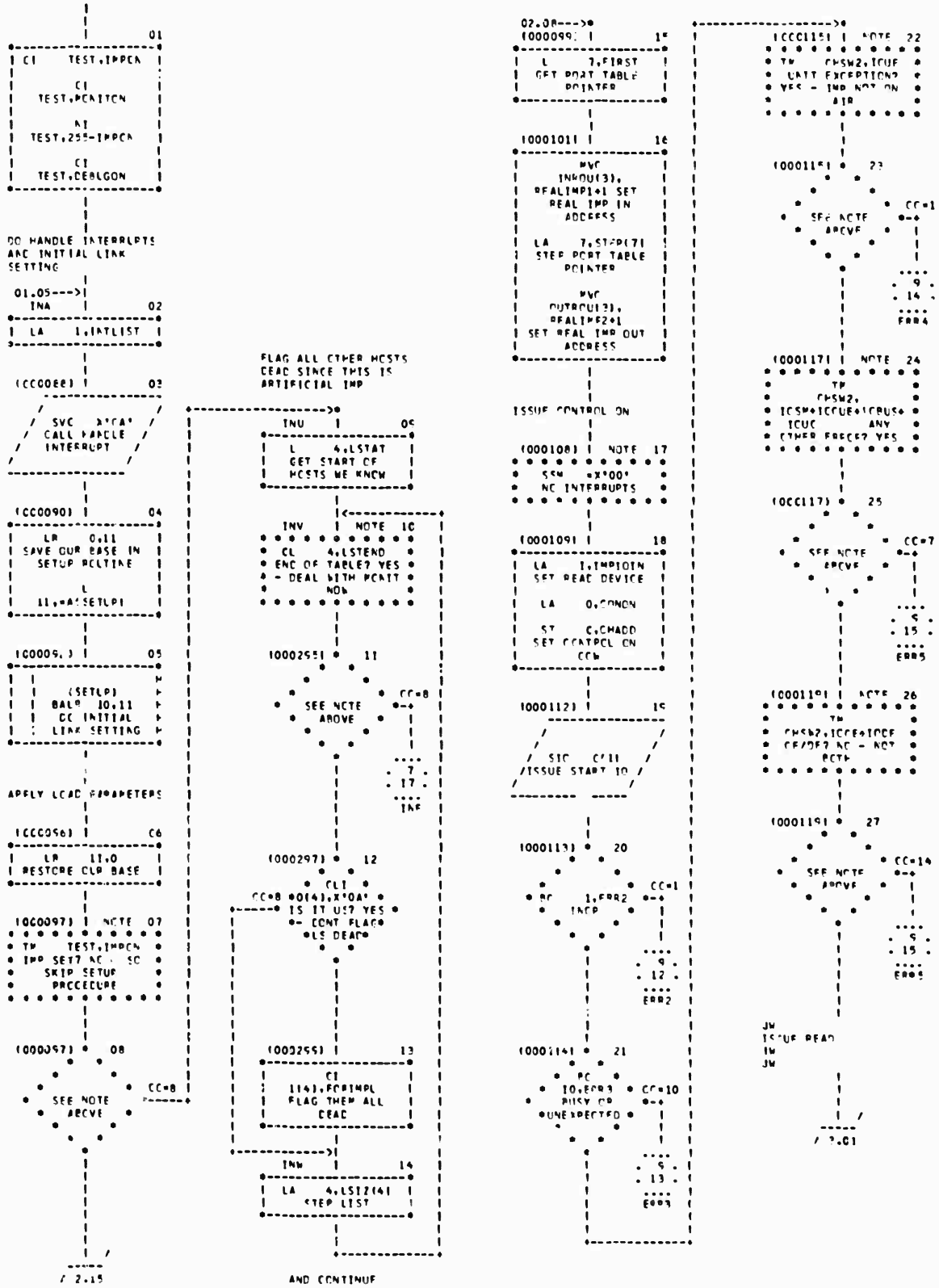

CHART TITLE - 'INITIALISING ROUTINES'

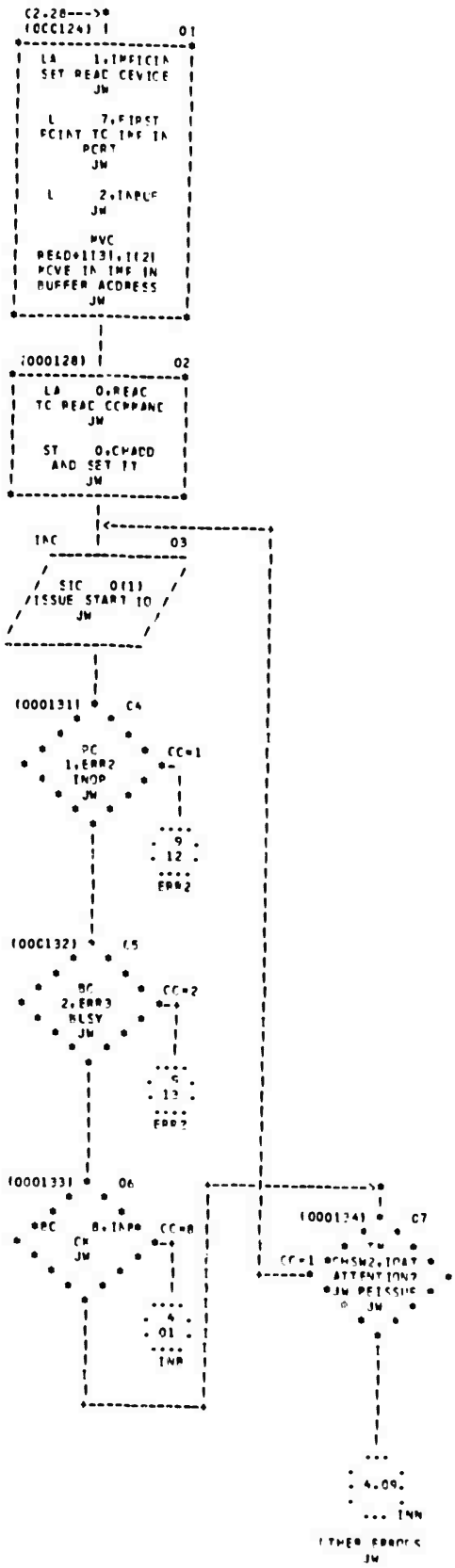

CHART TITLE - 'INITIALISING ROUTINES'

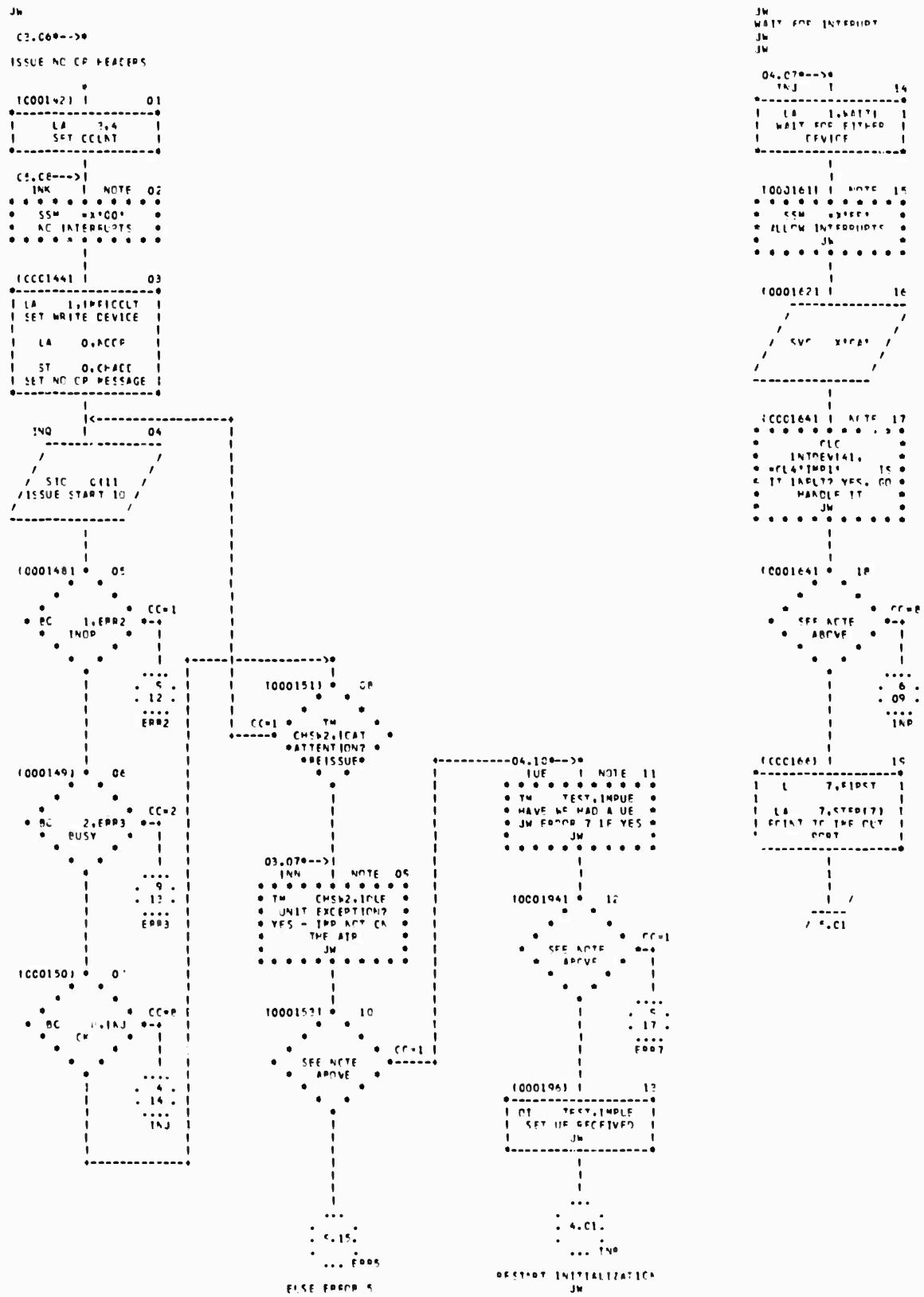

CHART TITLE - *INITIALISING ROUTINES*

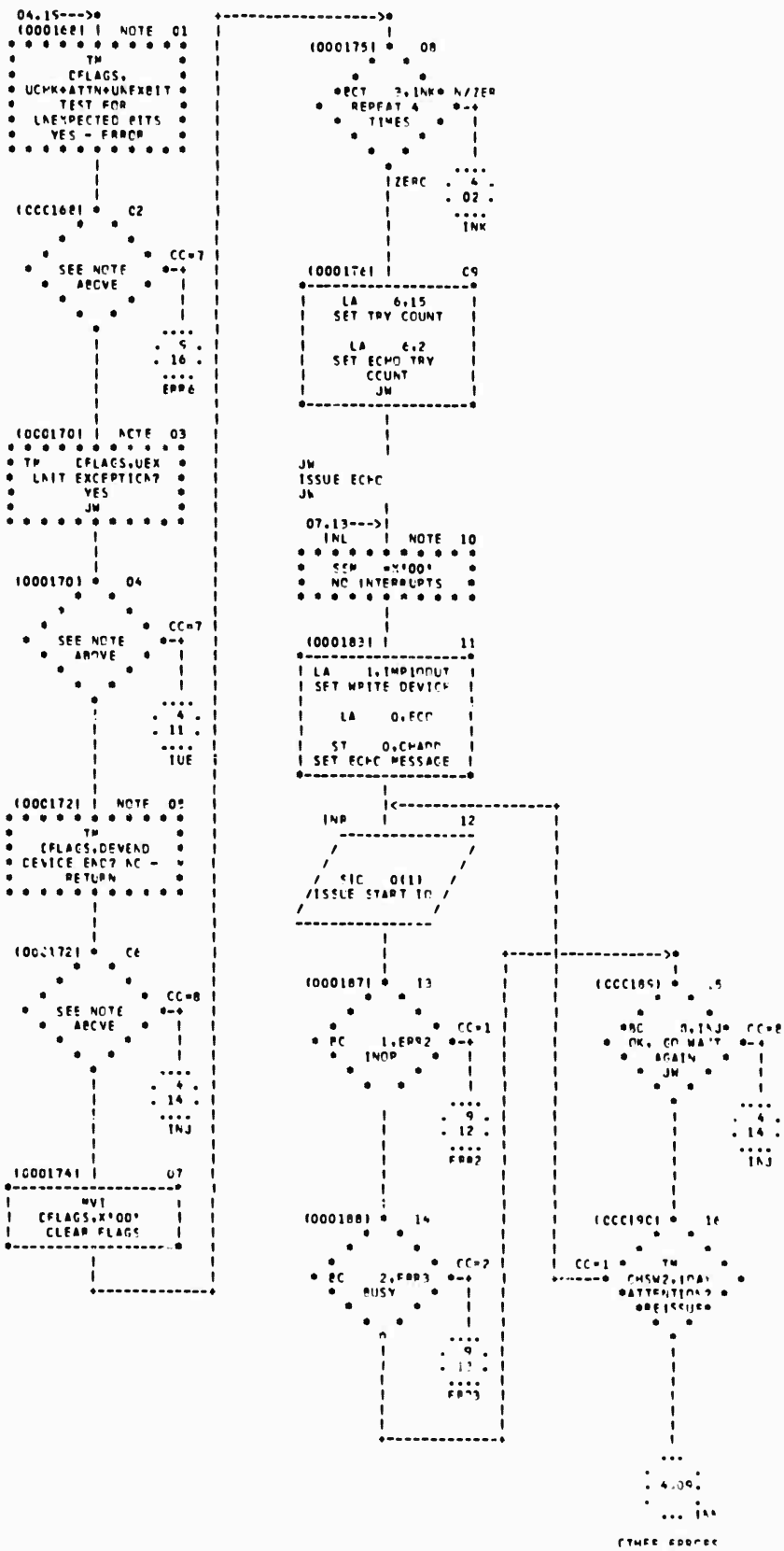

CHART TITLE - 'INITIALISING ROUTINES'

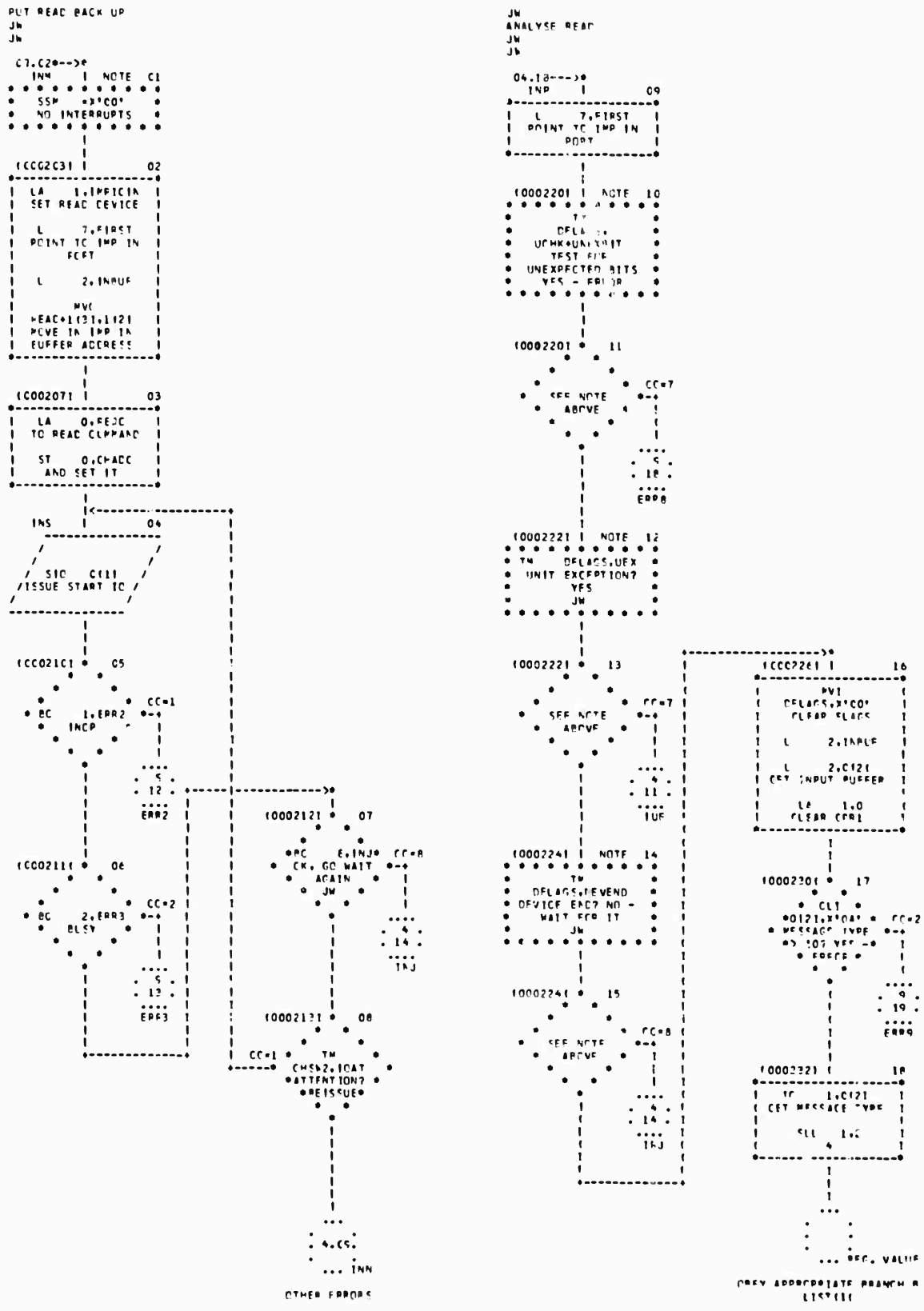

CHART TITLE - 'INITIALISING ROUTINES'

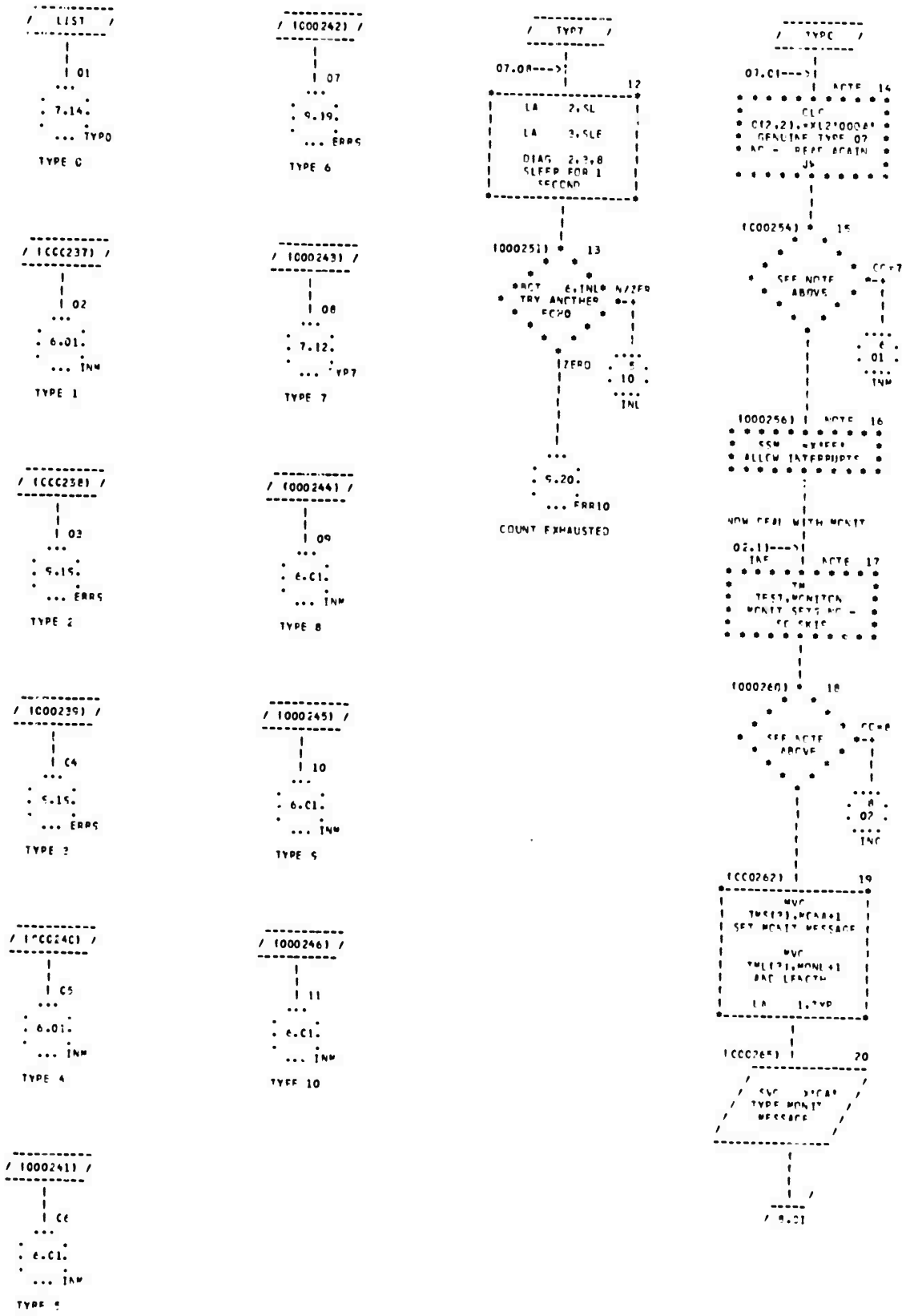

CHART TITLE - 'INITIALIZING ROUTINES'

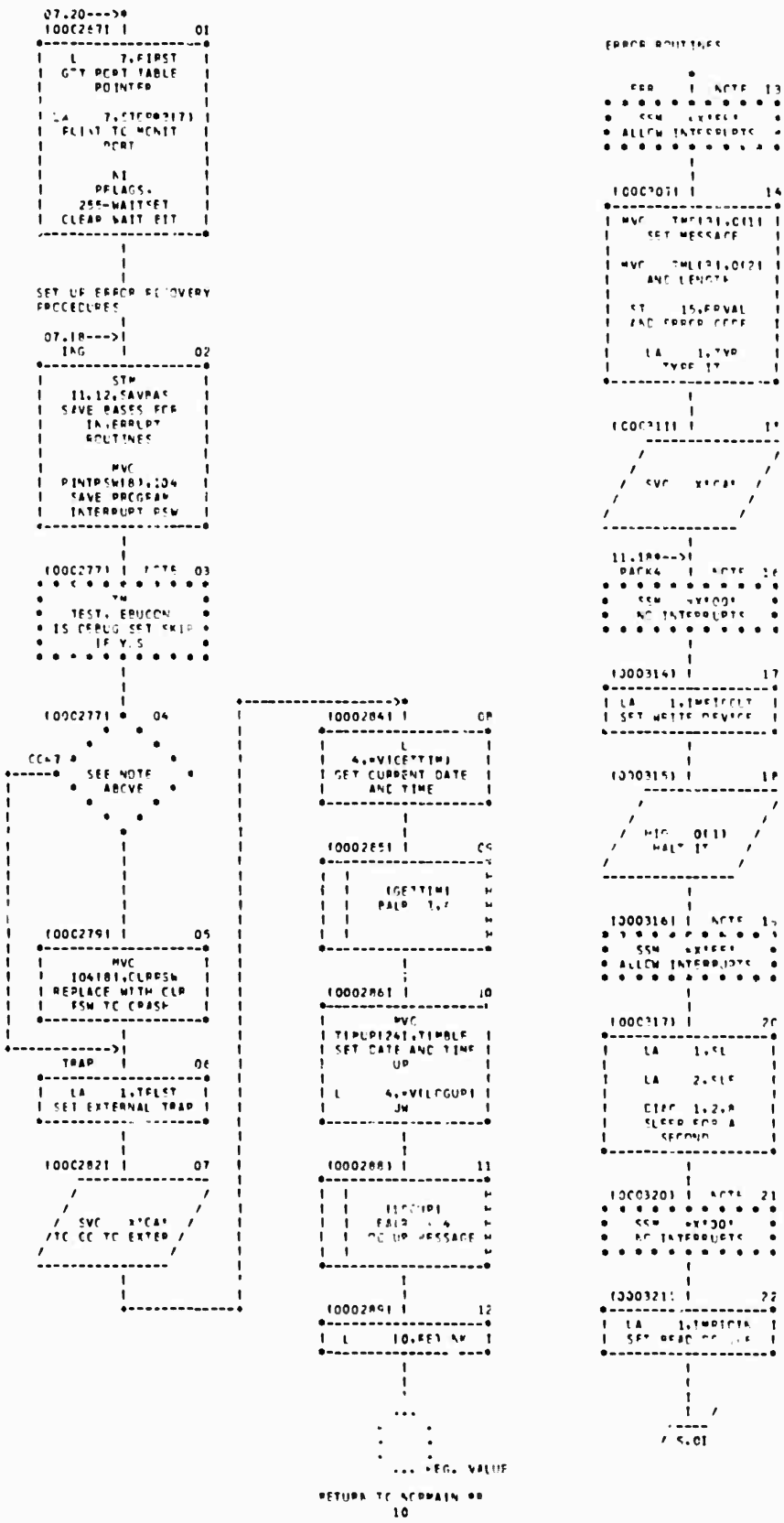

CHART TITLE - 'INITIALISING ROUTINES'

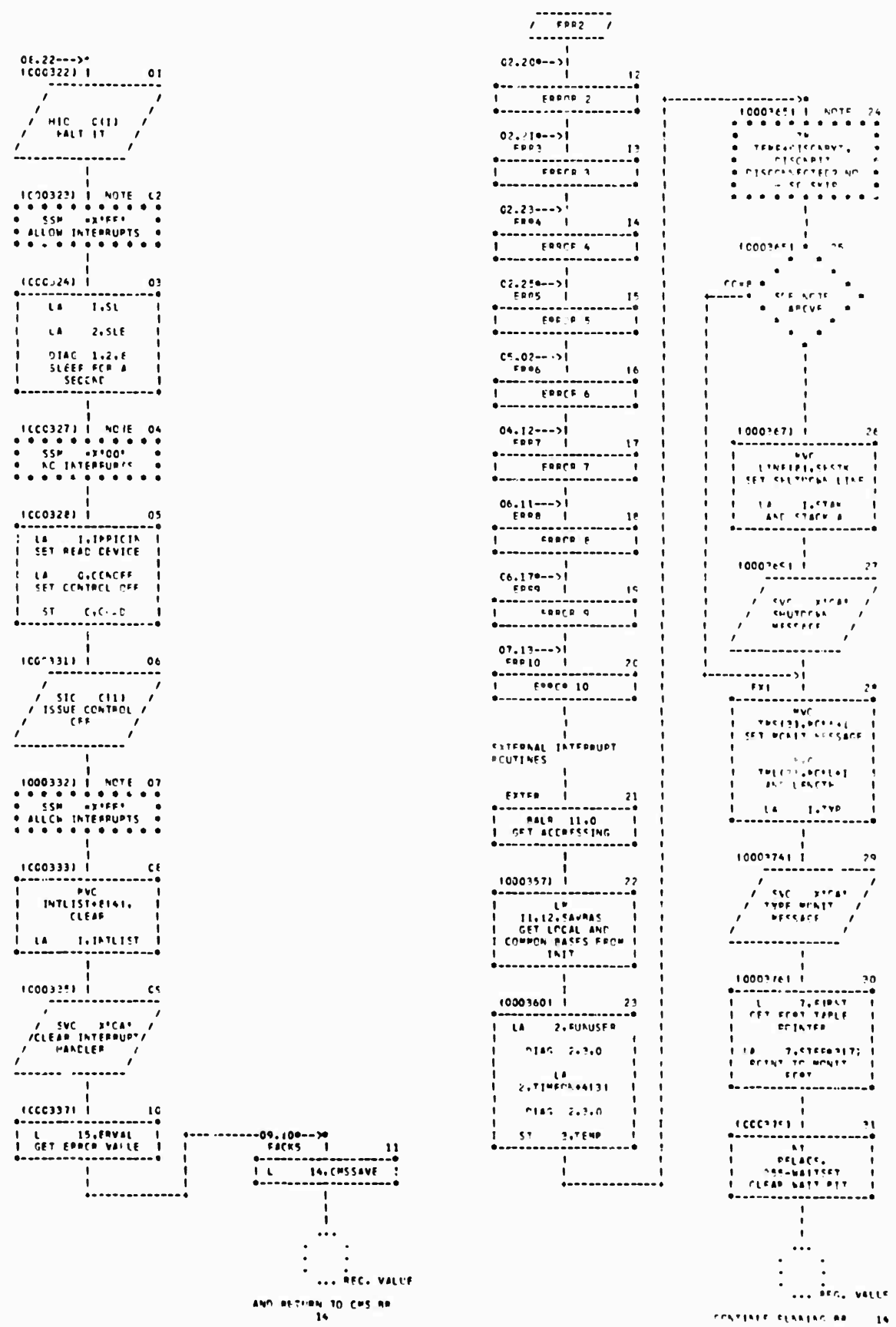

CHART TITLE - 'INITIALISING ROUTINES'

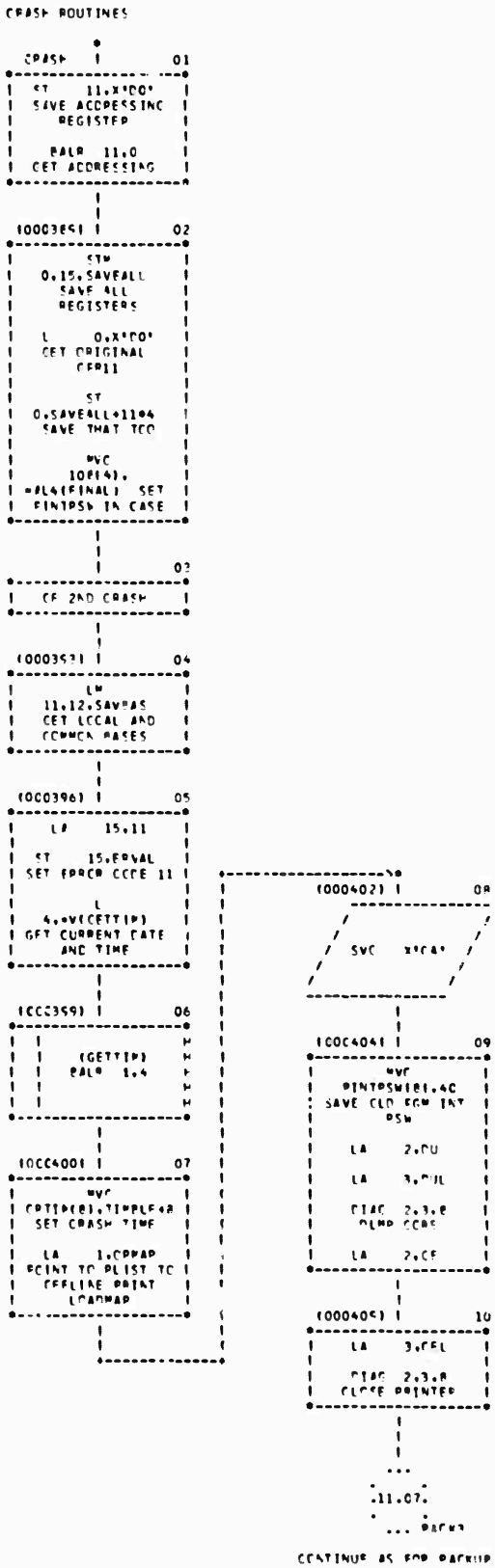

CHART TITLE - 'INITIALISING ROUTINES'

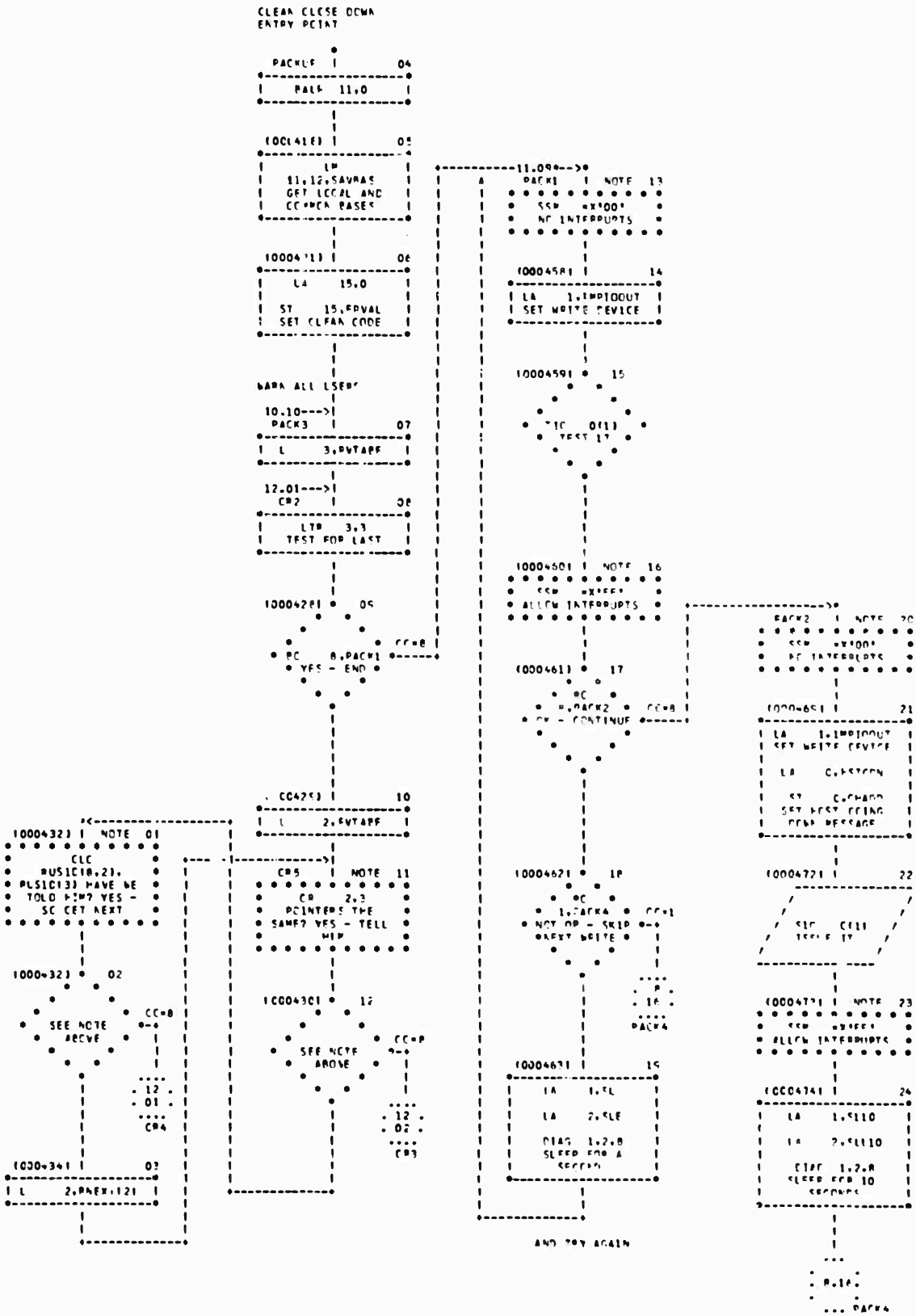

CHART TITLE - *INITIALIZING ROUTINES*

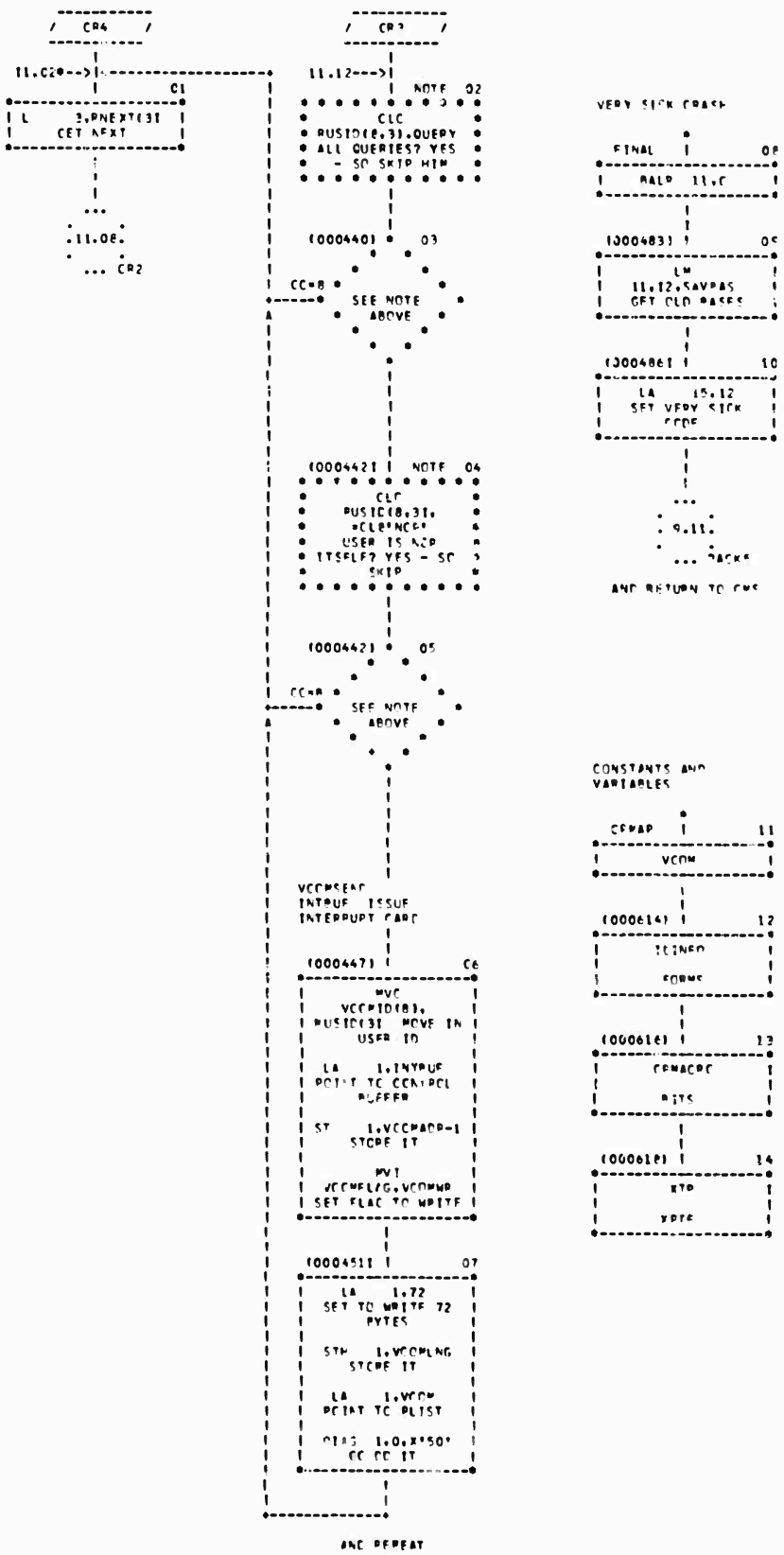

CHART TITLE - EQU STATEMENTS

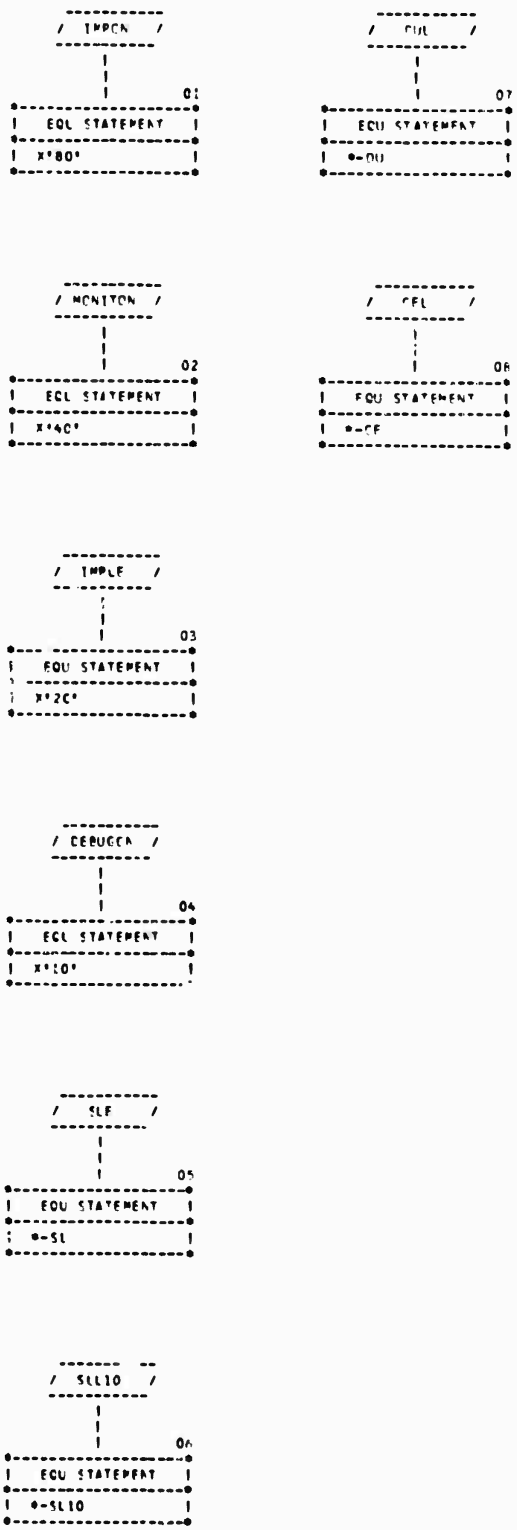

CHART TITLE - CONSTANTS AND STORAGE AREAS

```
(000067)          DC    AL4(*+4)
(000072) LOOPAR   DC    CL8')MP'
(000074)          DC    CL8'PCA)T'
(000076)          DC    CL8'NC)MP'
(000078)          DC    CL8'CEPEG'
(000081) FATEAT   DC    AL4(0)
(000085)          DC    AL4(*+4)
(000163)          DC    AL4(*+4)
(000266)          DC    AL4(*+4)
(000283)          DC    AL4(*+4)
(000312)          DC    AL4(*+4)
(000336)          DC    AL4(*+4)
(000370)          DC    AL4(*+4)
(000375)          DC    AL4(*+4)
(000403)          DC    AL4(*+4)
(000452) REAL)MP1 DC    AL4(R)MPIN)
(000453) REAL)MP2 DC    AL4(R)MPOUT)
(000454)          DS    1C
(000455) CURPSW   DC    XL4'C1C4C000'
(000456)          DC    AL4(CRASH)
(000457) SAVEAS   DC    2F'0'
(000458) RETLAB   DC    1F'0'
(000459) TEST     DC    1F'0'
(000512) ACCECMD  DC    X'04040000'     MESSAGE TYPE 4
(000514) HOICMD   DC    X'02040000'     MESSAGE TYPE 2
(000515) ECCCMD   DC    X'0000C000'     HEADER MESSAGE TYPE 0
(000516)          DC    X'00080002'     BYTE SIZE, LENGTH
(000517)          DC    X'00005F00'     TYPE, DATA
(000518) QUERY    DC    CL8'????????'
(000520) MONA     DC    A(4(PCAMS)
(000522) MONAS    DC    CL8'MONIT...'
(000523) MONL     DC    AL4(0-MONAS)
(000525) TEMP     DC    1F'0'
(000526) SAVEALL  DS    16F
(000527) CRT)M    DC    2F'0'           CRASH TIME
(000531) CLEAR    DC    C(4'CLR'
(000532) )NTL)ST  DC    CLR'MNCINT'     INTERRUPT
(000533)          DC    C(4'SST'        MANTEER
(000534)          DC    C(4'MP1',A(4()ATER),XL2(IMP)INT),CL2'AK'
(000535)          DC    C(4'MP2',A(4()ATER),A(2(IMP)OUT),CL2'AK'
(000536)          DC    C(4'VCOM',A(4()ATER),XL2'00FC',CL2'AK'
(000537)          DC    1F'-1'
(000540) TPLST    DC    CLR'TRAP'
(000541)          DC    A(E)TER)
(000542) TYP      DC    CLR'TYPL)N'
(000543)          DC    AL1(1)
(000544) TMS      DC    AL3(0-0)
```

CHART TITLE - CONSTANTS AND STORAGE AREAS

```
(000548)          DC    C'B'
(000549)  TML     DC    AL3(0-0)
(000550)  STAR    DC    CL8'ATTN'
(000553)          DC    CL4'FIFO'
(000554)          DC    AL1(8)
(000555)          DC    AL3(LINE)
(000557)  LINE    DC    CL8'        '
(000559)  SHSTK   DC    CL8'SHLTCCBA'
(000561)  WAIT1   DC    CL8'WAIT'
(000562)          DC    CL4'IMP1'
(000563)          DC    CL4'IMP2'
(000564)          DC    XF'0'
(000565)  INTCEV  DC    XF'0'
(000566)          DC    CL8'CFFLINE'
(000569)          DC    CL8'PRINT'
(000570)          DC    CL8'NCP'
(000571)          DC    CL8'LOADMAP'
(000572)  FENCE   DC    2F'-1'
(000574)  P1      DC    C'BAD PARAMETER LIST'
(000575)  PL1     DC    AL3(0-P1)
(000576)  P2      DC    C'IMP INOPERABLE - CONDITION CODE 3'
(000577)  PL2     DC    AL3(0-P2)
(000578)  P3      DC    C'IMP BUSY - CONDITION CODE 2'
(000579)  PL3     DC    AL3(0-P3)
(000580)  P4      DC    C'IMP NOT ON AIR - INITIAL STATUS'
(000581)  PL4     DC    AL3(0-P4)
(000582)  P5      DC    C'IMP INITIAL STATUS ERROR'
(000583)  PL5     DC    AL3(0-P5)
(000584)  P6      DC    C'IMP WRITE ERROR'
(000585)  PL6     DC    AL3(0-P6)
(000586)  P7      DC    C'IMP BECAME NOT READY'
(000587)  PL7     DC    AL3(0-P7)
(000588)  P8      DC    C'IMP READ ERROR'
(000589)  PL8     DC    AL3(0-P8)
(000590)  P9      DC    C'UNEXPECTED MESSAGE FROM IMP - ERROR'
(000591)  PL9     DC    AL3(0-P9)
(000592)  P10     DC    C'ECHO COUNT EXHAUSTED'
(000593)  PL10    DC    AL3(0-P10)
(000595)  SL      DC    C'SL 1'
(000598)  SL10    DC    C'SL 10'
(000601)  CL      DC    C'CU 12000-30000'
(000604)  CE      DC    C'C '
(000605)  INTBUF  DC    XL1'08'
(000610)          DC    16X'00'
(000611)          DC    XL4'00000000'
(000612)          DC    8X'00'
```

CHART TITLE - 'NETWORK CONTROL PROGRAM'

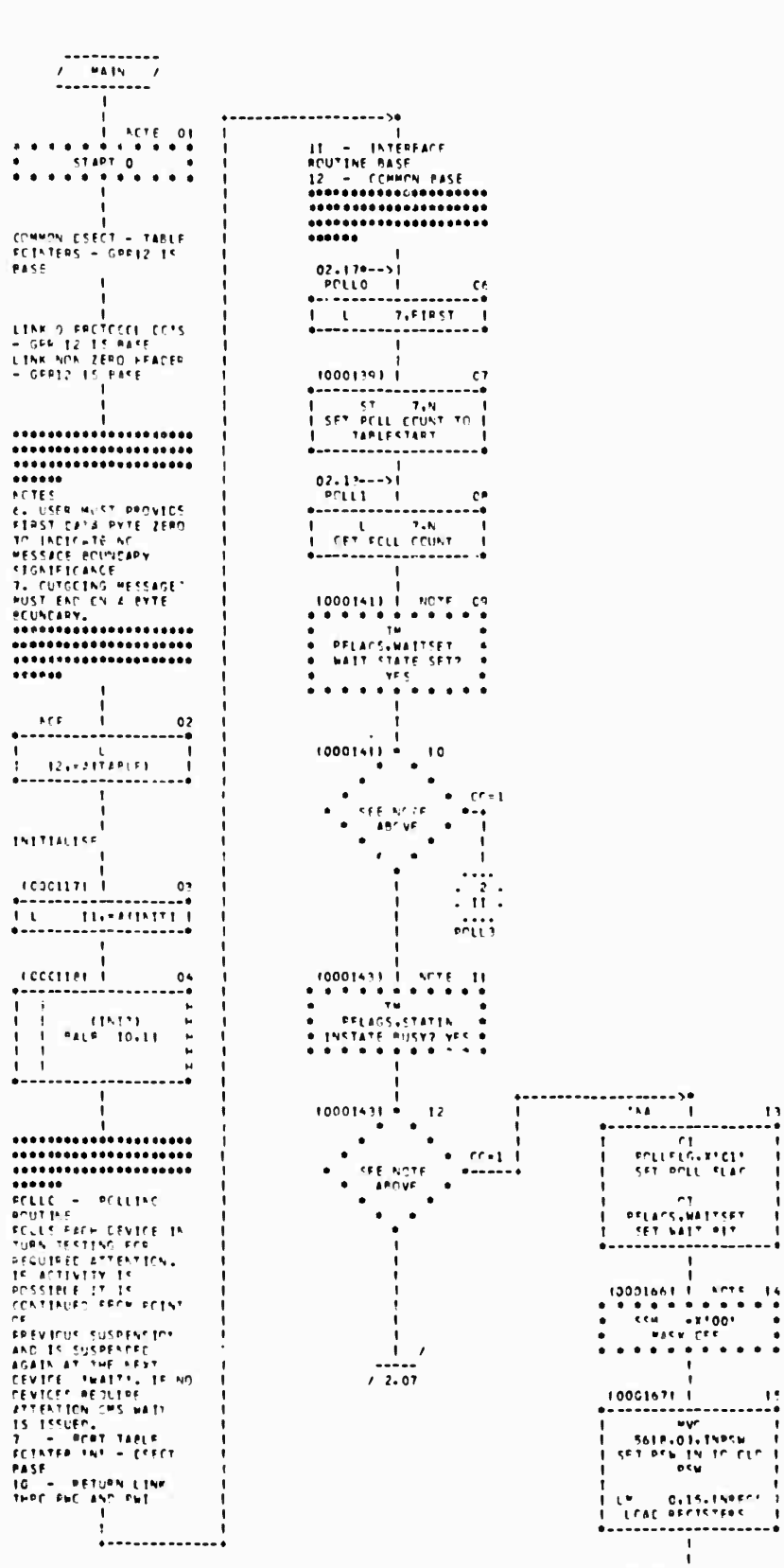

CHART TITLE - 'NETWORK CONTROL PROGRAM'

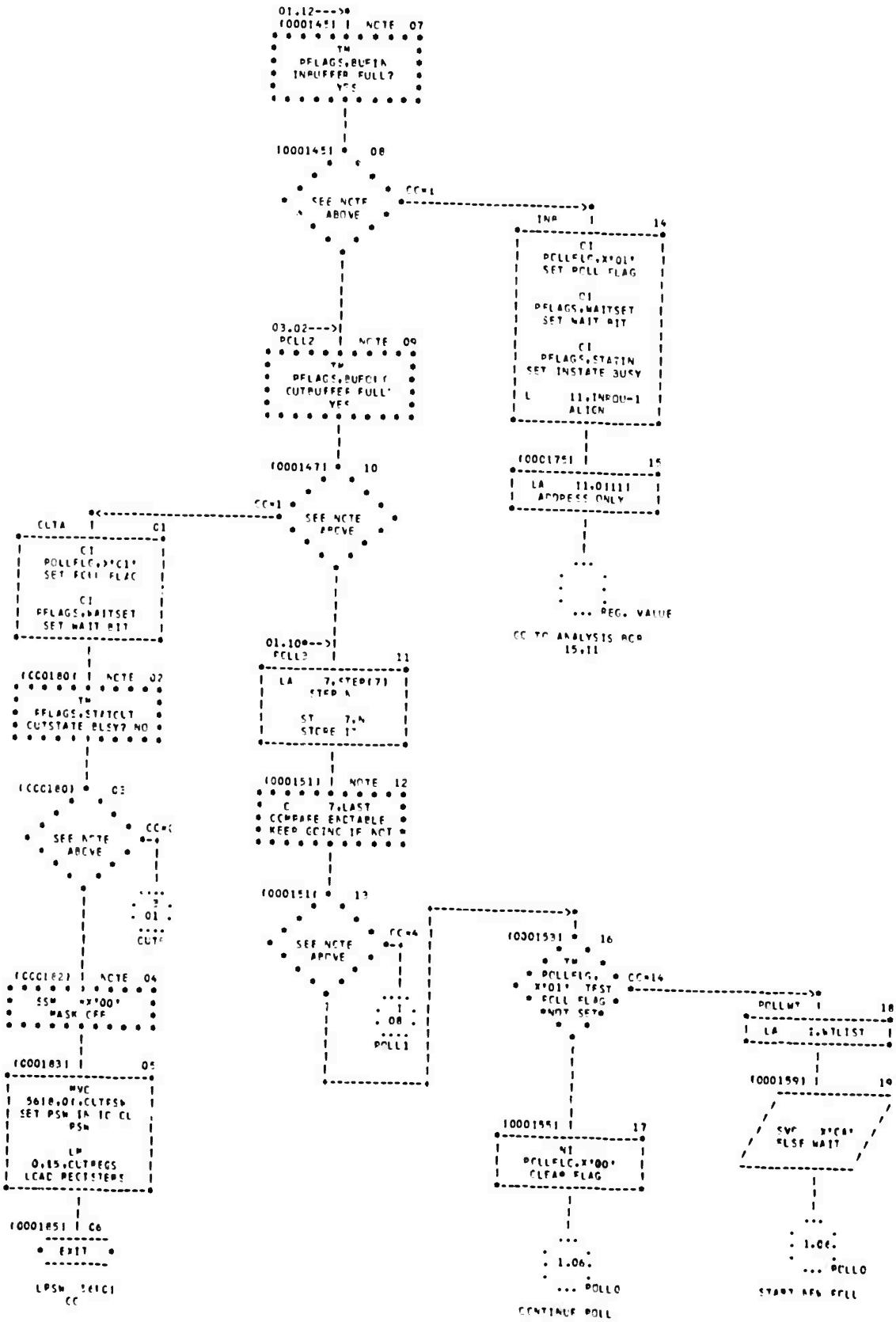

CHART TITLE - 'NETWORK CONTROL PROGRAM'

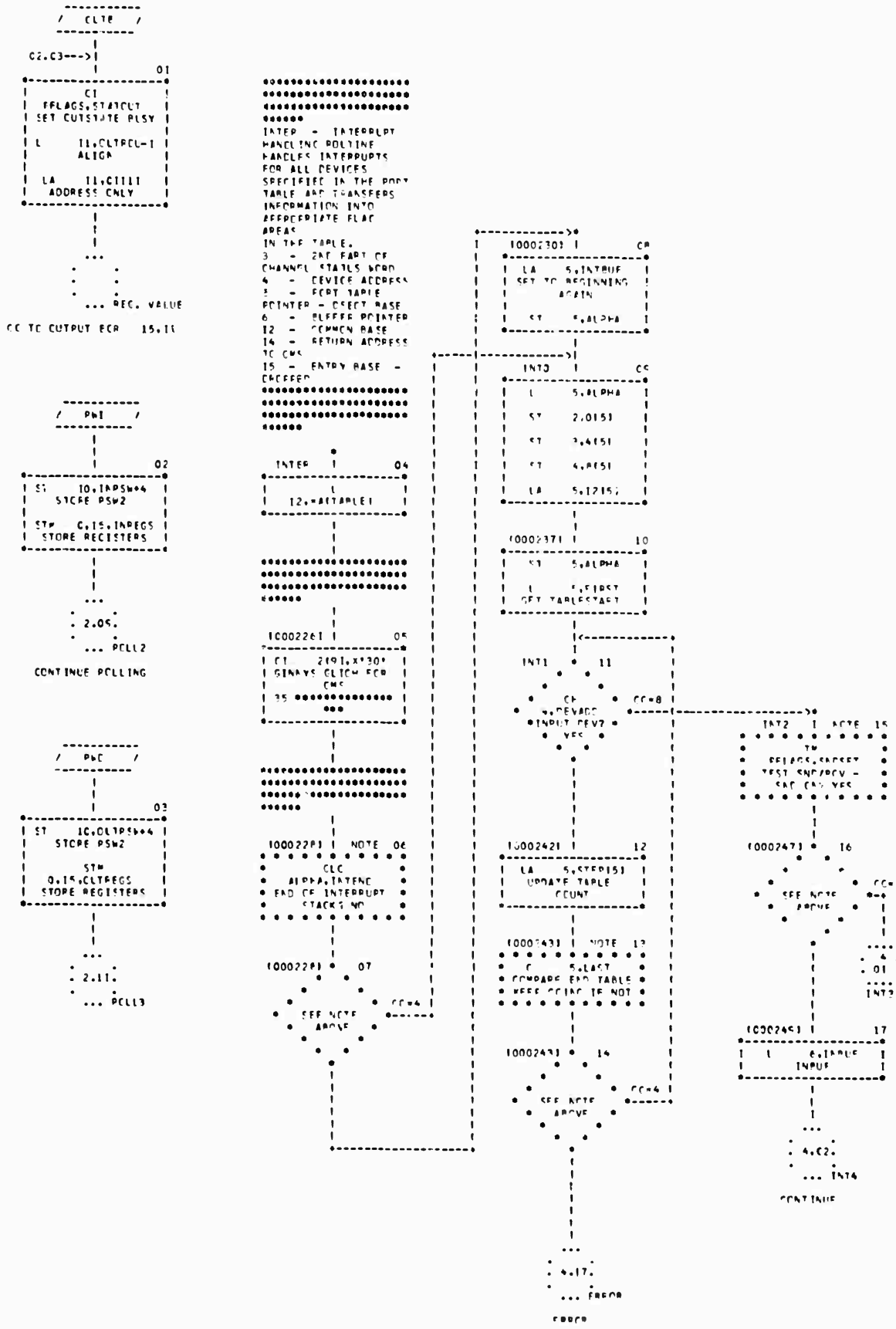

CHART TITLE - 'NETWORK CONTROL PROGRAM'

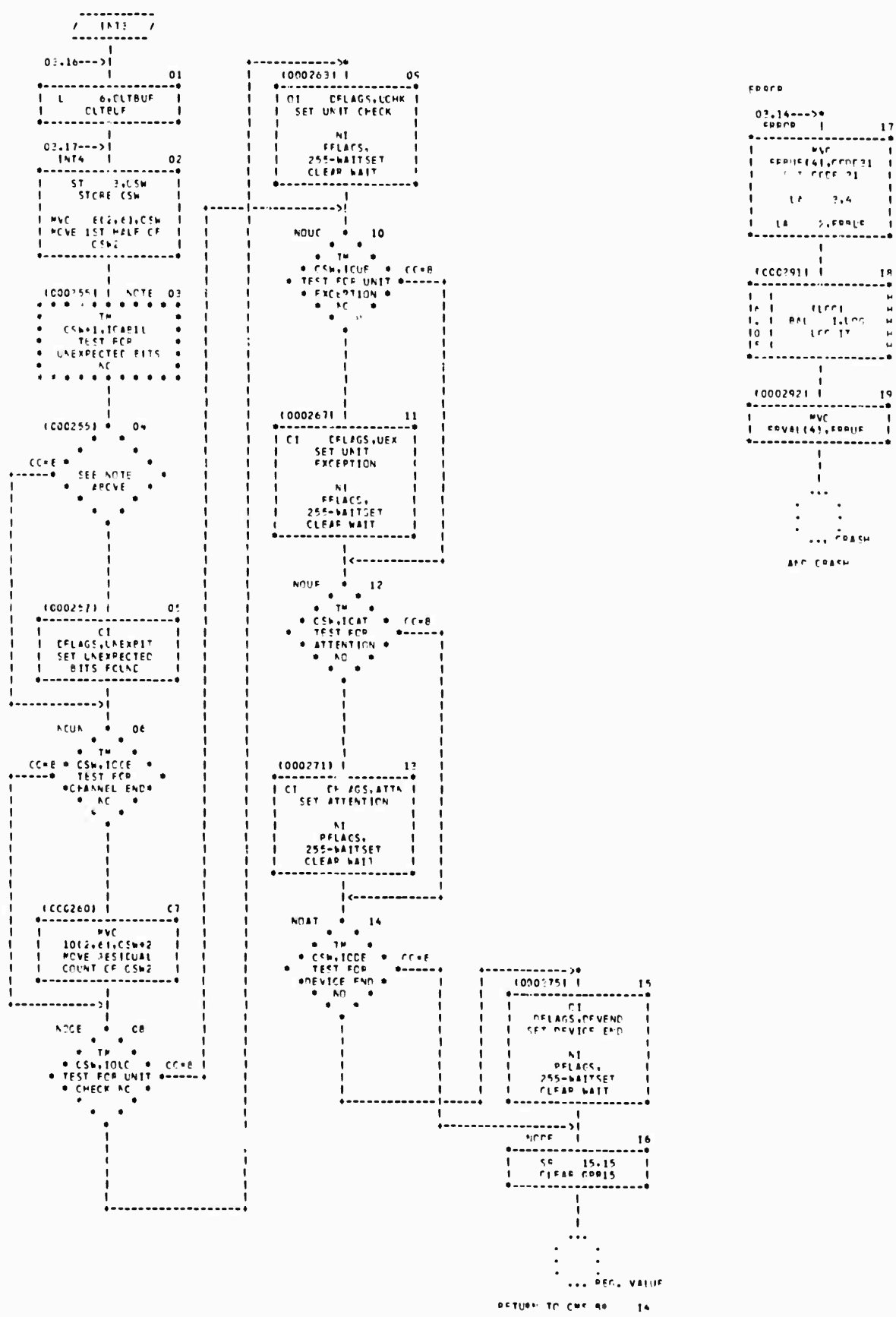

CHART TITLE - 'NETWORK CONTROL PROGRAM'

```
CET DATE AND TIME
ROUTINE
SAVES GPRS 1 TO 3,
LINK IS GPR1, RESULTS
IN TIMBUF

05,CS0 ->
 CETTIM  |          01
STM   1,3,SAVE13
SAVE - ADDRESSING
     IS GPR12

(0000305) |  NOTE  02
   SSM    =X'00'
   SET MASK OFF

(0000301) |          03
  LA     1,TIMCCW
     LOAD CCW
   L      2,X'4E'
      SAVE 48
   ST     1,X'4E'
     SET NEW

(0000309) |          04
   SIO    X'FF'

(0000310) |          05
   ST     2,X'48'
     RESET 48

(0000311) |  NOTE  06
   SSM    =X'FF'
    SET MASK ON

(0000312) |          07
LM     1,3,SAVE13
     RESTORE

...
TIMCCW

BR     1
```

```
(0000351) |          08
MVC
FILCTTIME(8),NULL
ZERO LIS/CON TIME

MVC
  FILCTTIME(16),
  RTIME(3)     SET
  OPEN AND CLOSE1
      TIMES

(0000411) |          09
|  |                 H
15 |     (CETTIME)   H
1. | BAL   1,GETTIM  H
10 |  GET CURRENT    H
11 |      TIME       H

(0000421) |          10
MVC
  FILC2TIME(8),
 TIMBUF+8      SET
  CLOSE 2 TIME

05,24--->
  WRR    |          11
LA     1,FILLIST

(0000441) |          12
   SVC    X'CA'
   WRITE THE
    RECORD

(0000461) |          13
LA     1,FILCLT

(0000471) |          14
   SVC    X'CA'
 LOG THE DISC

(0000451) |          15
LM
  15,1,SAVE151
   RESTORE THE
    REGISTERS

...
FILOUT

RETURN BR    1
```

```
WRITE   |          16
STM
  15,1,SAVE151
SAVE - ADDRESSING
     IS GPR12

MVC
FILIDE(8),RUSID(3)
   SET USER ID

MVC
FILDAT(8),RDAT(3)
    SET DATE

MVC
  FILLSOC(4),
  RLHOM(3) SET
  LOCAL SOCKET

(0000331) |          17
MVC
  FILFSOC(4),
  RFHOM(3) SET
 FOREIGN SOCKET

MVC
  FILFHOST(11),
 RFHOST(3)     SET
  FOREIGN HOST

MVC
  FILLINK(3),
 RLINK(3) SET LINK
   AND STATUS

MVC
  FILMESS(8),

|                 18
RMESS(3) SET
 MESSAGE AND BIT
     COUNTS

(0000351) |  NOTE  19
CLC
 RTIM214 31,NULL
  IS CLOSE TIME
SET? NO - SO SKIP
     THIS

(0000371) *    20
   SEE NOTE
    APPVE

CC=8
```

```
WRR     |          21
MVC
  FILCTTIME(8),
 RTIME(3)     SET
   LIS/CON TIME

(0000521) |          22
|  |                 H
15 |     (CETTIME)   H
1. | BAL   1,GETTIM  H
10 |    GET THE      H
11 |  CURRENT TIME   H

(0000531) |          23
MVC
  FILOPTIME(8),
 TIMBUF+8      SET
    OPEN TIME

MVC
  RTIME(8,3),
 TIMBUF+8 SET OPEN
   TIME IN RV

MVC
FILC1TIME(8),NULL
SET CLOSE TIME =0

MVC
FILC2TIME(8),NULL
SET CLOSE TIME =

|                 24
0

...
5,11,
WRR

AND TO THE REST
```

CHART TITLE - 'NETWORK CONTROL PROGRAM'

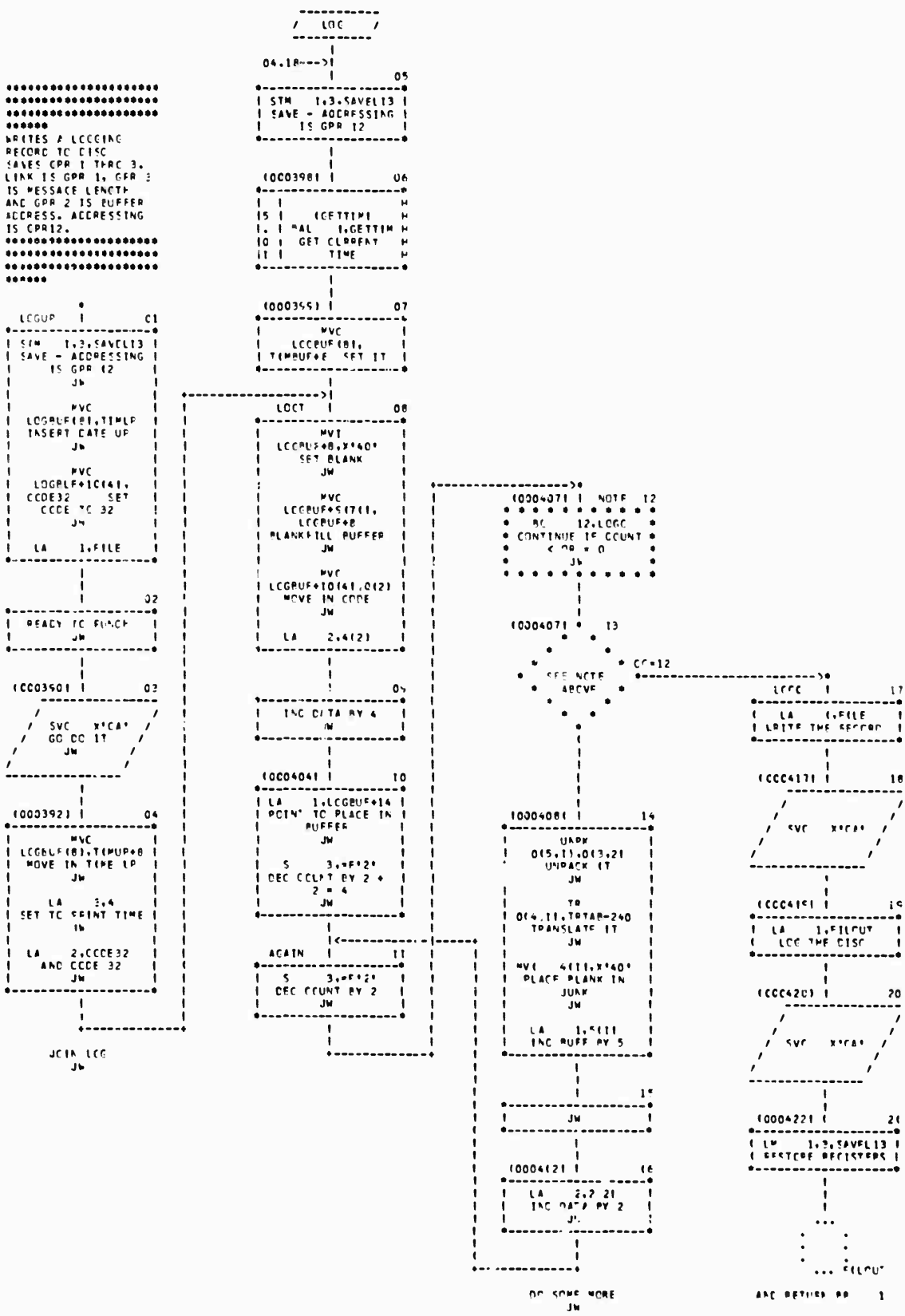

CHART TITLE - *NETWORK CONTROL PROGRAM*

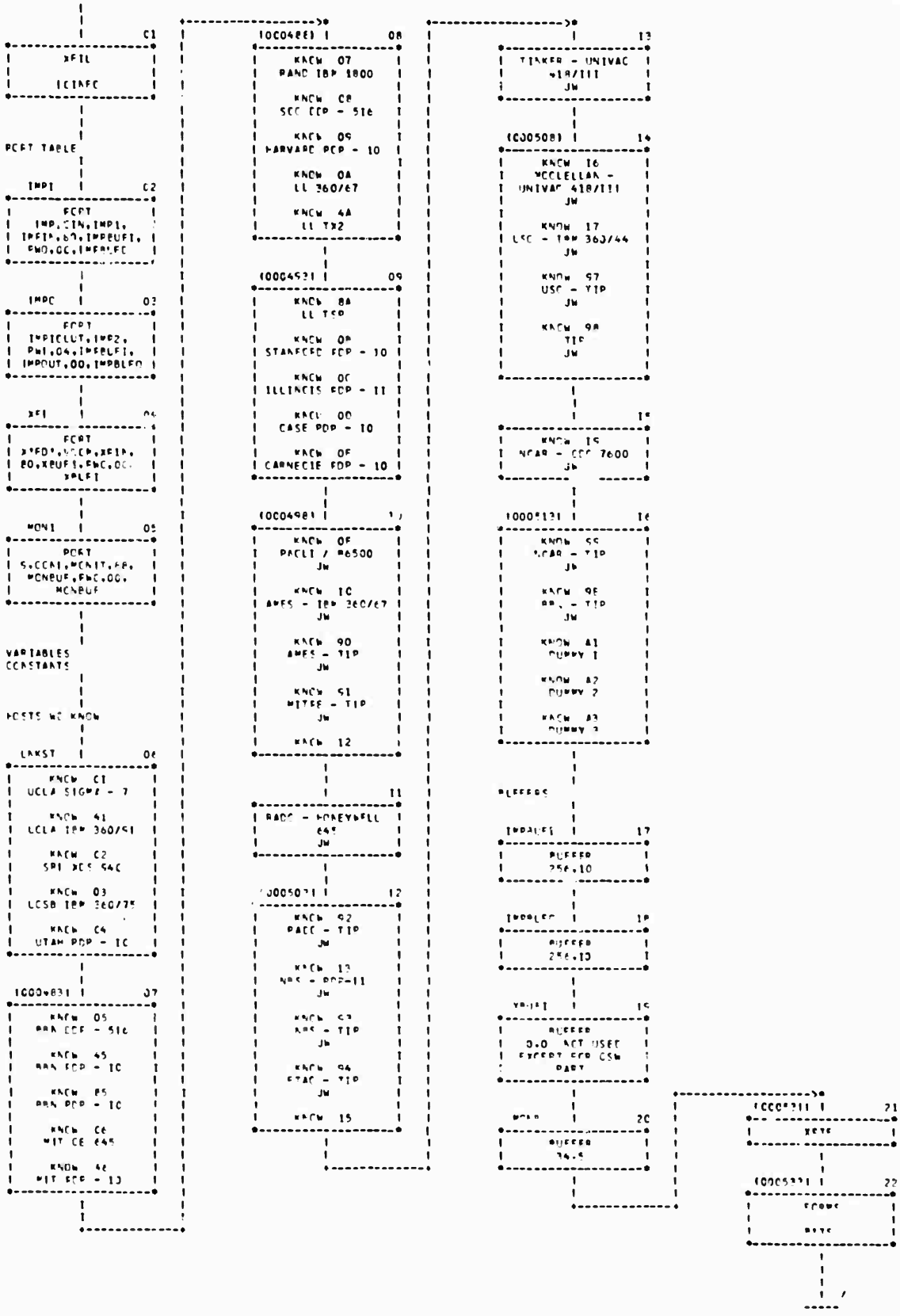

CHART TITLE - CONSTANTS AND STORAGE AREAS

```
(000028)  FVTABF   DC    1F'0'          FIRST ENTRY OF RV TABLE
(000029)  FVTABL   DC    1F'0'          LAST ENTRY OF RV TABLE
(000030)  IMOC     DC    2F'0'          HEAD AND TAIL OF IPPS ACTIVE C
(000031)  SYSTAT   DC    1F'0'          SYSTEM STATUS WORD
(000032)  FIRST    DC    AL4(IMPI)      FIRST ENTRY OF PORT TABLE
(000033)  LAST     DC    AL4(PORL)      FIRST ITEM AFTER PORT TABLE
(000034)  A         C    1F'0'          PORT TABLE POINTER
(000035)  LSTAT    DC    AL4(LNKST)     HOSTS WE KNOW
(000036)  LSTEND   DC    AL4(HEND)      FIRST ITEM AFTER HOSTS WE KNOW
(000037)  TIMPLF   DC    3D'0'          DATE - TIME BUFFERS
(000038)  RVNC     DC    1F'0'          TOTAL NUMBER OF RV ENTRIES
(000039)  MESSNC   DC    1F'0'          TOTAL NUMBER OF MESSAGES TRANSFERRED
(000040)  BITNC    DC    1F'0'          TOTAL NUMBER OF BITS TRANSFERRED
(000041)  TIMUP    DC    6F'0'          DATE - TIME UP
(000042)  CMSSAVE  DC    1F'0'          CMS RETURN
(000043)  FINTPSW  DC    2F'0'          PROGRAM INTERRUPT PSW
(000044)  ERVAL    DC    F'0'           ERROR CODE ON RETURN
(000045)  NCPFCB   DC    H'24',H'80'
(000050)           DC    5X'C0',X'08',H'1',X'00'
(000051)           DC    X'00',5X'00'
(000052)  FTSFC-   DC    H'32',H'152'
(000053)           DC    9X'00',X'08',H'10',X'00'
(000054)           DC    X'01',14X'C0'
(000055)  STRFCB   DC    H'32',H'152'
(000056)           DC    5X'C0',X'08',H'10',X'00'
(000057)           DC    X'02',14X'0C'
(000058)  CLSFCB   DC    H'32',H'144'
(000059)           DC    5X'C0',X'08',H'9',X'00'
(000060)           DC    X'03',14X'00'
(000061)  ALLFCB   DC    H'32',H'136'
(000062)           DC    5X'C0',X'08',H'8',X'00'
(000063)           DC    X'04',14X'C0'
(000064)  CVBFCB   DC    H'24',H'104'
(000065)           DC    5X'C0',X'08',H'4',X'00'
(000066)           DC    X'05',6X'00'
(000067)  RETFCB   DC    H'32',H'136'
(000068)           DC    5X'C0',X'08',H'8',X'00'
(000069)           DC    X'06',14X'0C'
(000070)  INPFCB   DC    H'24',H'88'
(000071)           DC    5X'C0',X'08',H'2',X'00'
(000072)           DC    X'07',6X'00'
(000073)  INSFCB   DC    H'24',H'88'
(000074)           DC    5X'C0',X'08',H'2',X'00'
(000075)           DC    X'08',6X'00'
(000076)  FLCFCB   DC    H'24',H'88'
(000077)           DC    5X'C0',X'08',H'2',X'00'
(000078)           DC    X'09',6X'00'
```

CHART TITLE - CONSTANTS AND STORAGE AREAS

```
(000078)  ERRFCB   DC    H'24',H'88'
(000080)           DC    5X'CC',X'0E',H'2',X'00'
(000081)           DC    X'0A',6X'00'
(000082)  ERRFCB   DC    H'32',H'168'
(000083)           DC    5X'00',X'0E',H'12',X'00'
(000084)           DC    X'08',14X'CC'
(000085)  ESTFCB   DC    H'24',H'80'
(000086)           DC    5X'00',X'0E',H'1',X'00'
(000087)           DC    X'CC',6X'00'
(000088)  BRPFCB   DC    H'24',H'80'
(000089)           DC    5X'00',X'0E',H'1',X'00'
(00008C)           DC    X'CC',6X'00'
(000094)  TXFCB    DC    H'24',H'72'     BYTE AND BIT SIZES
(00016C)           DC    AL4(*+4)
(000281)  ALPHA    DC    AL4(IATBUF)
(000282)  INTBLF   DC    20XL12'00'      INTERRUPT BUFFER
(000283)  INTEND   DC    AL4(*)          END OF STACK
(000310)  TIMCCW   DC    AL4(TIMBUF),AL4(24)
(000313)  SAVE13   DC    3F'0'
(000345)           DC    AL4(*+4)
(000348)           DC    AL4(*+4)
(000355)  SAVE15   DC    3F'0'
(000360)  NULL     DC    2F'0'
(000363)  FILLIST  DC    CL8'BRBLF'
(000364)           DC    CL8'NCP'
(000365)           DC    CL8'DATA'
(000368)           DC    CL2'PT'
(000369)           DC    H'0'
(00036B)           DC    A(FILIO)
(00036E)           DC    F'80'
(000370)           DC    CL2'F'
(000371)           DC    H'0'
(000374)  FILCLT   DC    CL8'LOGDISK'
(000375)           DC    AL4(*+4)                                    JW
(000418)           DC    AL4(*+4)
(000421)           DC    AL4(*+4)
(000426)  FILE     DC    CL8'WRBUF'
(000427)           DC    CL8'NCP'
(000428)           DC    CL8'LOG'
(000429)           DC    CL2'F1'
(00042C)           DC    H'0'
(000431)           DC    A(LOGBUF)
(000432)           DC    F'80'
(000433)           DC    CL2'F'
(000434)           DC    H'0'
(000436)  LOGBUF   DC    80C' '          LOGBUF INITIALIZED TO BLANKS   JW
(000487)  TRTAB    DC    C'0123456789ABCDEF'                            JW
```

CHART TITLE - CONSTANTS AND STORAGE AREAS

```
(000438)  SAVEL13  DC    3F'0'
(000451)  PORL     DC    AL4(*)
(000457)  CSW      DS    1F
(000458)  POLLFLG  DC    1F'0'          POLL FLAG
(000463)  WTLIST   DC    CL8'WAIT'      WAITLIST
(000464)           DC    CL4'VCCM',CL4'IMP1',CL4'IMP2'
(000465)           DC    CL4'CON1'
(000466)           DC    1F'0'
(000467)  INTCEV   DC    1F'0'
(000470)  EREUF    DC    1F'0'
(000471)  CODE31   DC    CL4' 31 '
(000472)  CODE32   DC    CL4' 32 '                                    JW
(000473)  CRASH    DC    F'-1'
(000515)  HENC     DC    AL4(*)         END OF LIST
```

CHART TITLE - 'XFER INTERFACE'

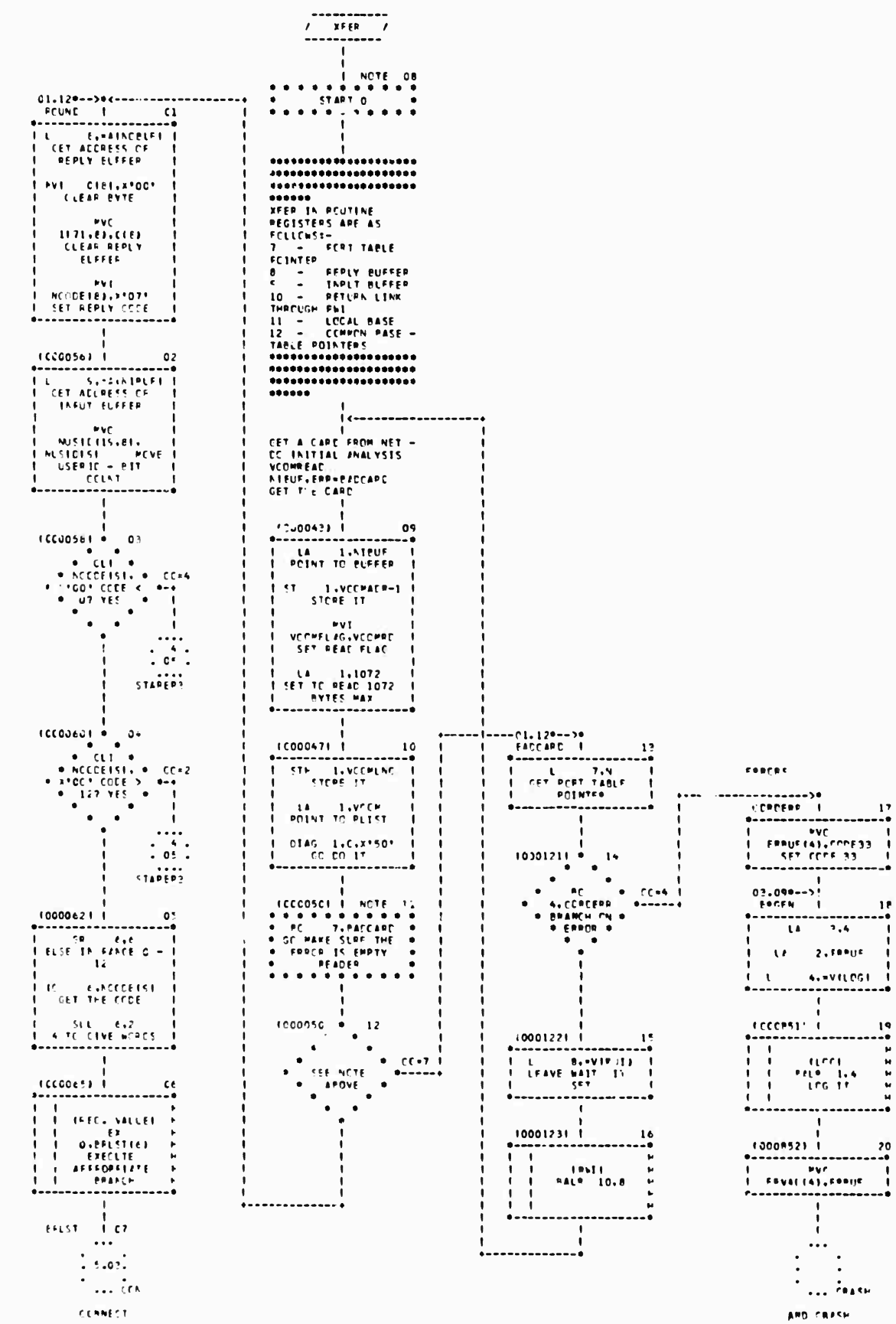

CHART TITLE - 'XFER INTERFACE'

```
 -----------
/ (0000671) /
-----------
     |
     |
     | C1
    ...
   .      .
   . 5.02.
   .      .
    ... LIS

  LISTEN
```

```
 -----------
/ (0000731) /
-----------
     |
     |
     | 07
    ...
   .      .
   . 4.05.
   .      .
    ... STARFP3

REPLY - ??????
```

```
 -----------
/ (0000681) /
-----------
     |
     |
     | C2
    ...
   .      .
   .14.01.
   .      .
    ... SND

  SEND
```

```
 -----------
/ (0000741) /
-----------
     |
     |
     | 08
    ...
   .      .
   . 4.05.
   .      .
    ... STARFP3

INTERRUPT TO NET - ??????
```

```
 -----------
/ (0000651) /
-----------
     |
     |
     | C3
    ...
   .      .
   .17.11.
   .      .
    ... RCV

  RECEIVE
```

```
 -----------
/ (0000751) /
-----------
     |
     |
     | 09
    ...
   .      .
   .13.01.
   .      .
    ... ENC

ENABLE CONNECT
```

```
 -----------
/ (0000701) /
-----------
     |
     |
     | C4
    ...
   .      .
   .20.05.
   .      .
    ... CLS

  CLOSE
```

```
 -----------
/ (0000761) /
-----------
     |
     |
     | 10
    ...
   .      .
   .13.12.
   .      .
    ... ENL

ENABLE LISTEN
```

```
 -----------
/ (0000711) /
-----------
     |
     |
     | C5
    ...
   .      .
   .23.01.
   .      .
    ... STA

  STATUS
```

```
 -----------
/ (0000771) /
-----------
     |
     |
     | 11
    ...
   .      .
   .13.14.
   .      .
    ... DSP

DISABLE
```

```
 -----------
/ (0000721) /
-----------
     |
     |
     | C6
    ...
   .      .
   .14.03.
   .      .
    ... SACA

INTERRUPT - CONT CHECK
LOCAL TAG
```

```
 -----------
/ (0000781) /
-----------
     |
     |
     | 12
    ...
   .      .
   .20.01.
   .      .
    ... PUR

PURGE
```

CHART TITLE - 'XFER INTERFACE'

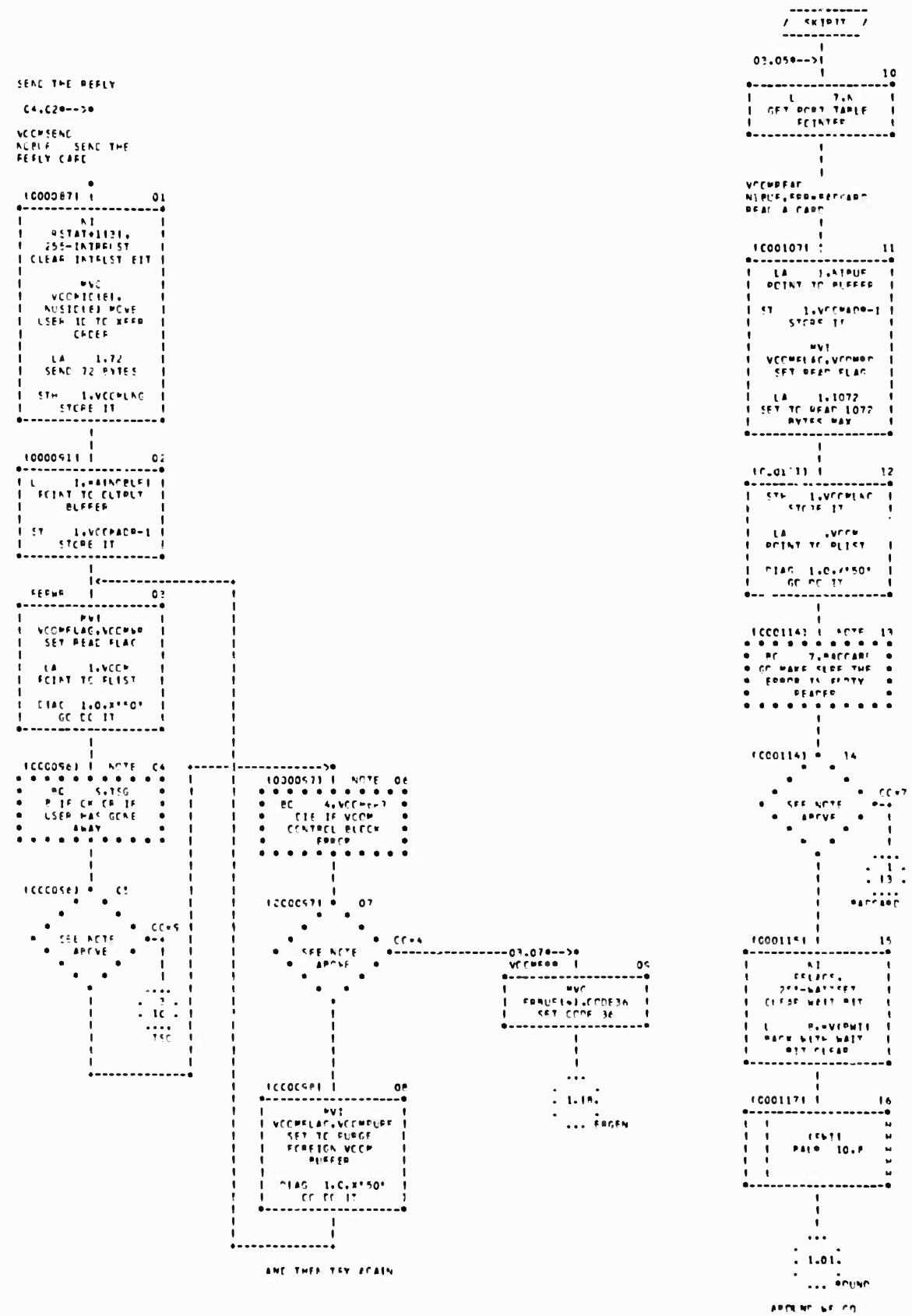

CHART TITLE - 'XFER INTERFACE'

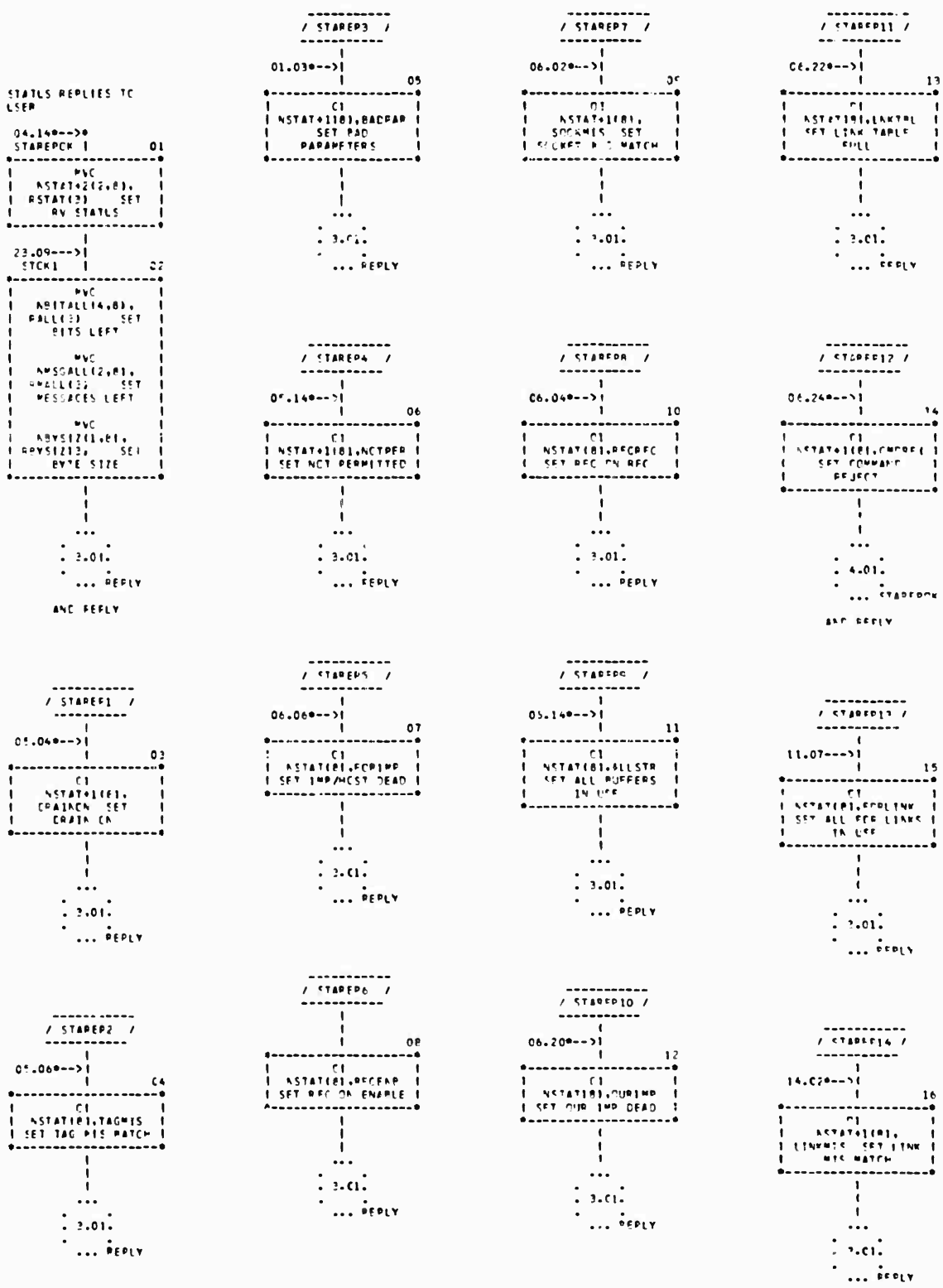

CHART TITLE - 'XFER INTERFACE'

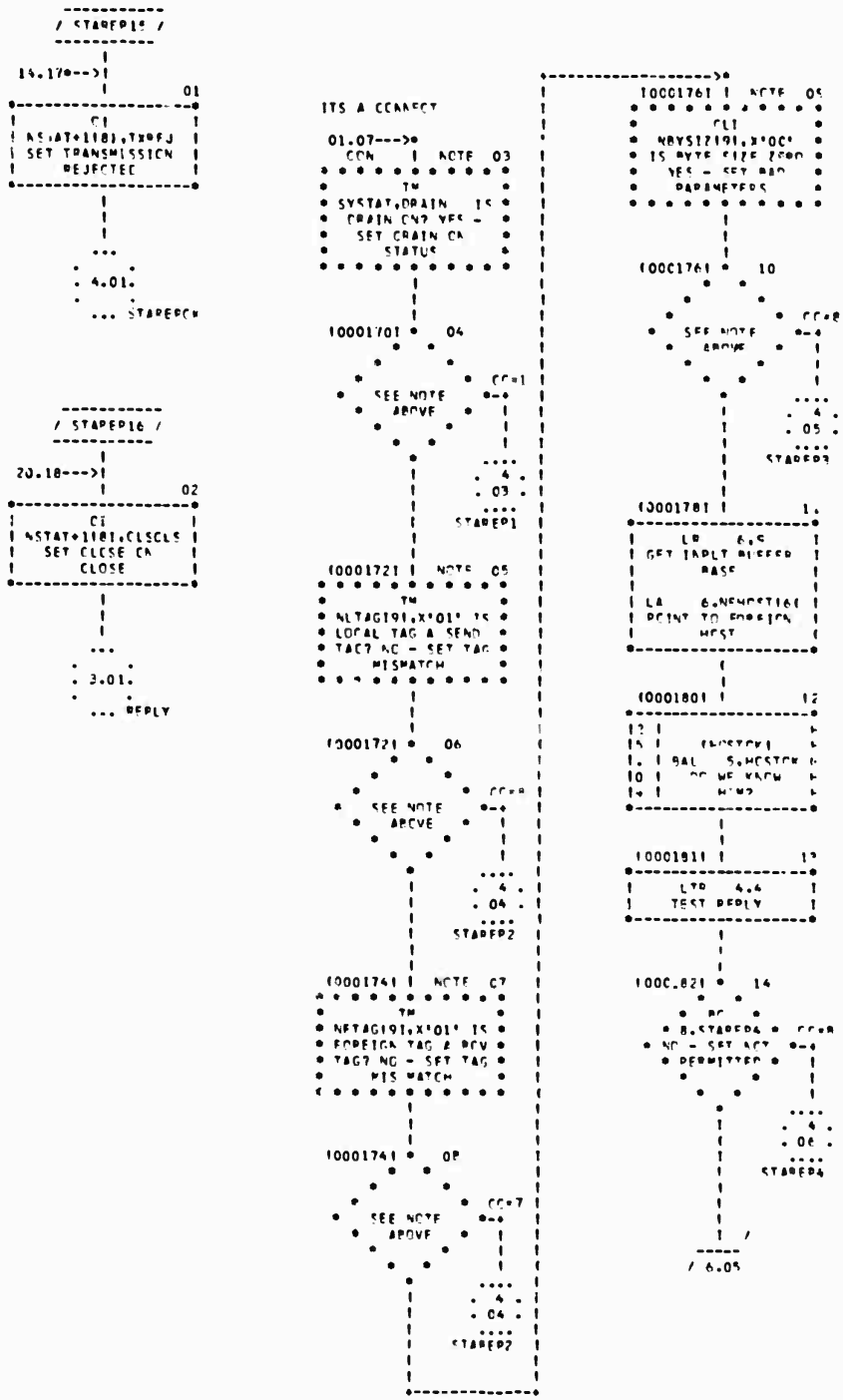

CHART TITLE - 'XFER INTERFACE'

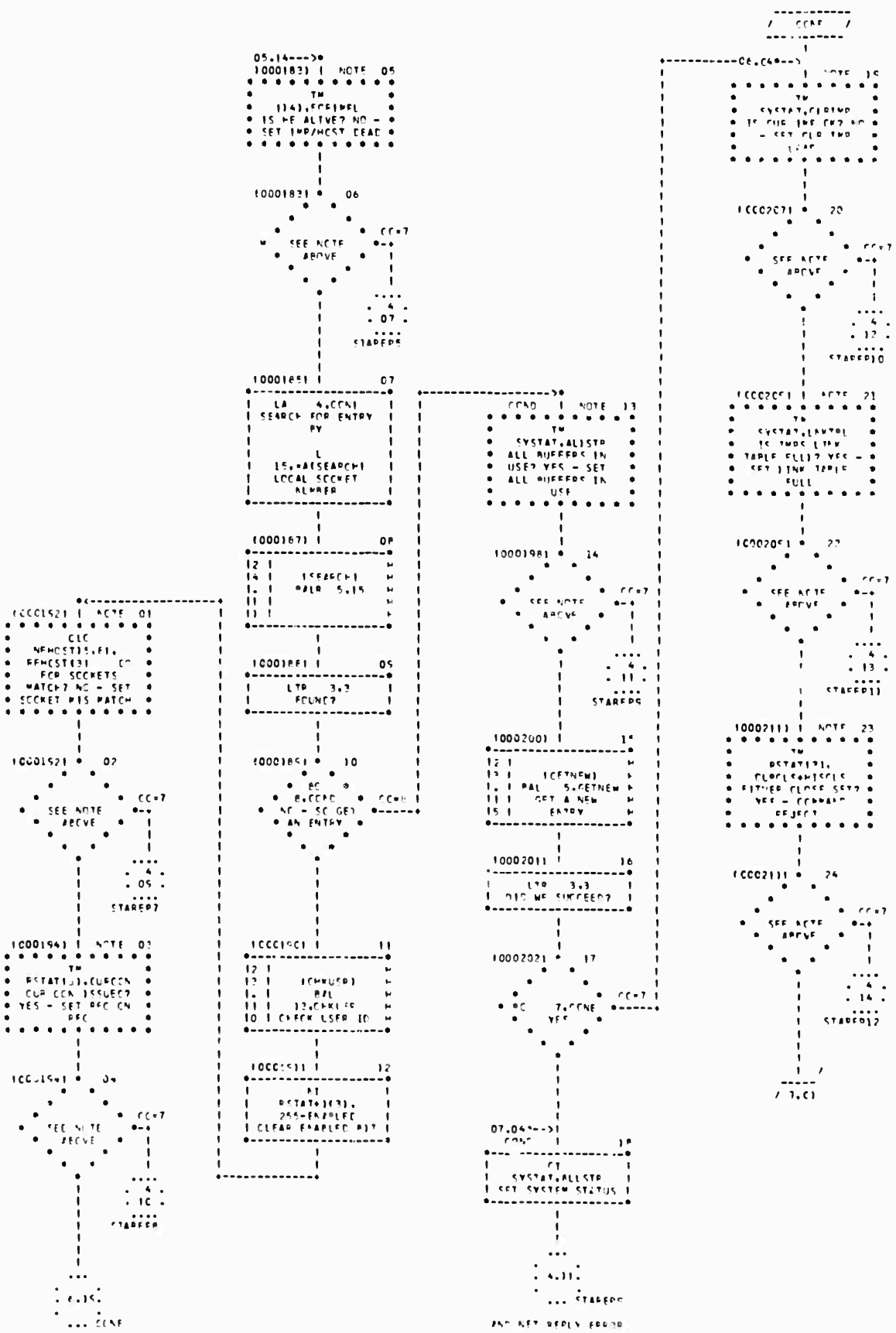

CHART TITLE - *XFER INTERFACE*

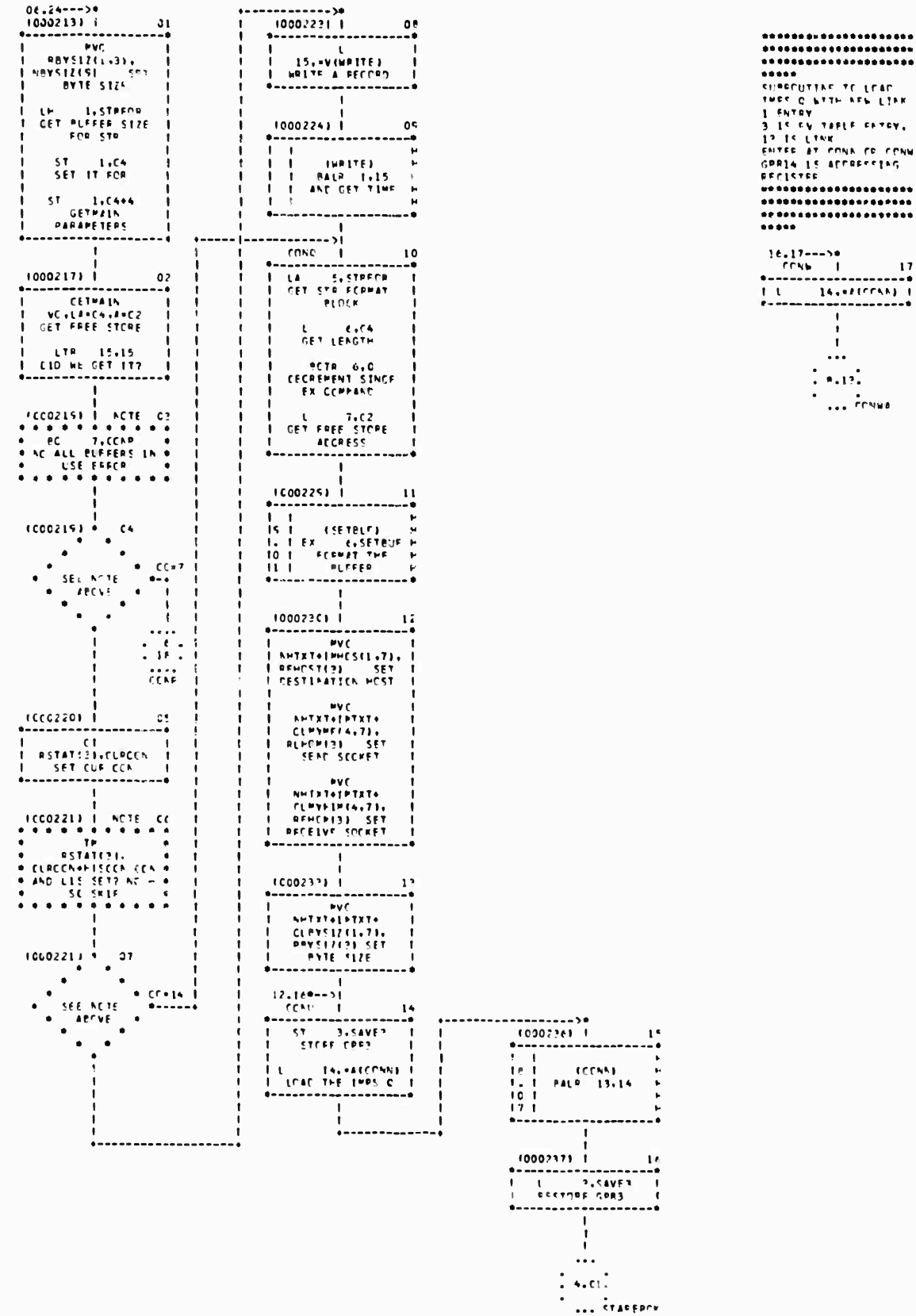

CHART TITLE - 'XFER INTERFACE'

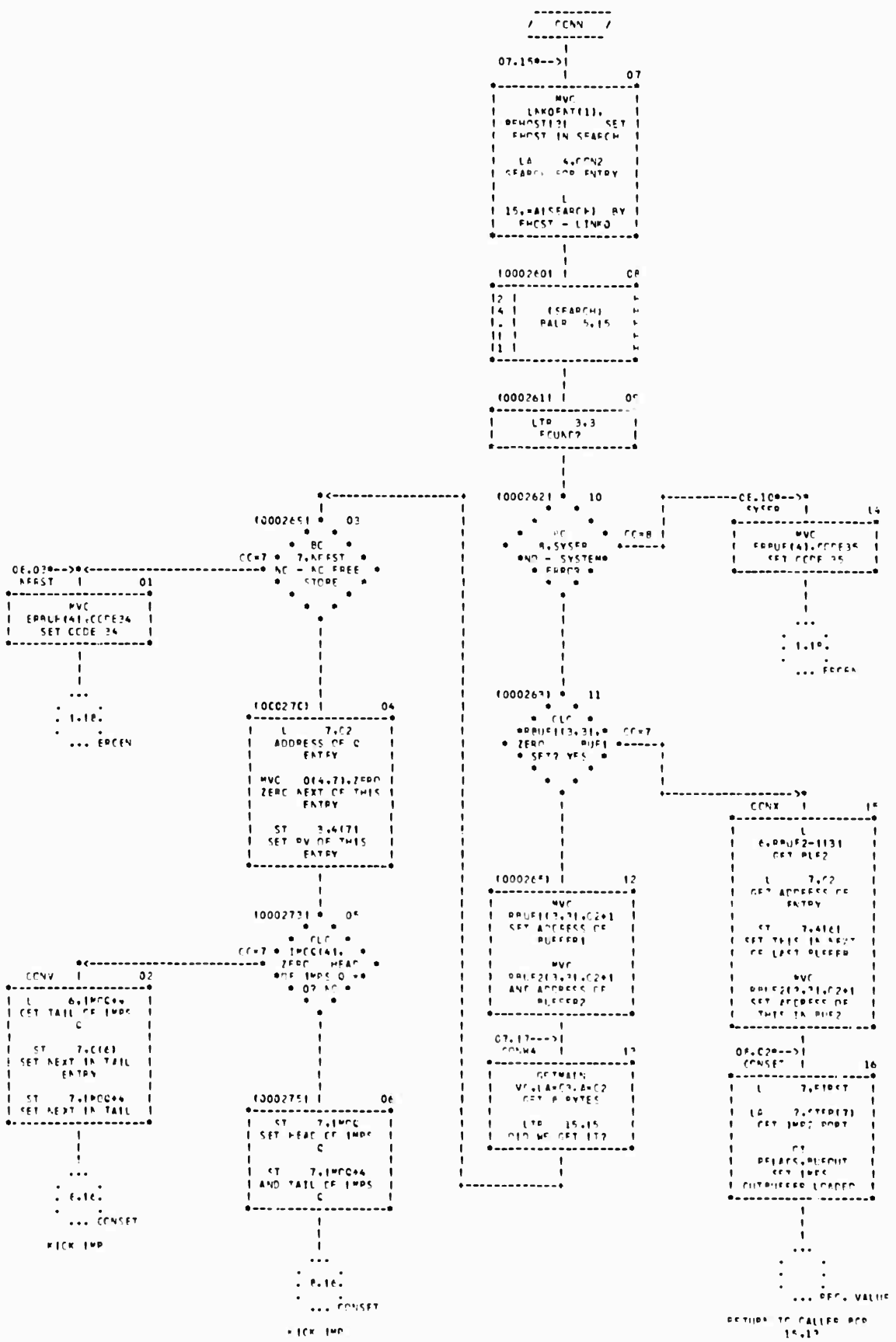

CHART TITLE - 'XFER INTERFACE'

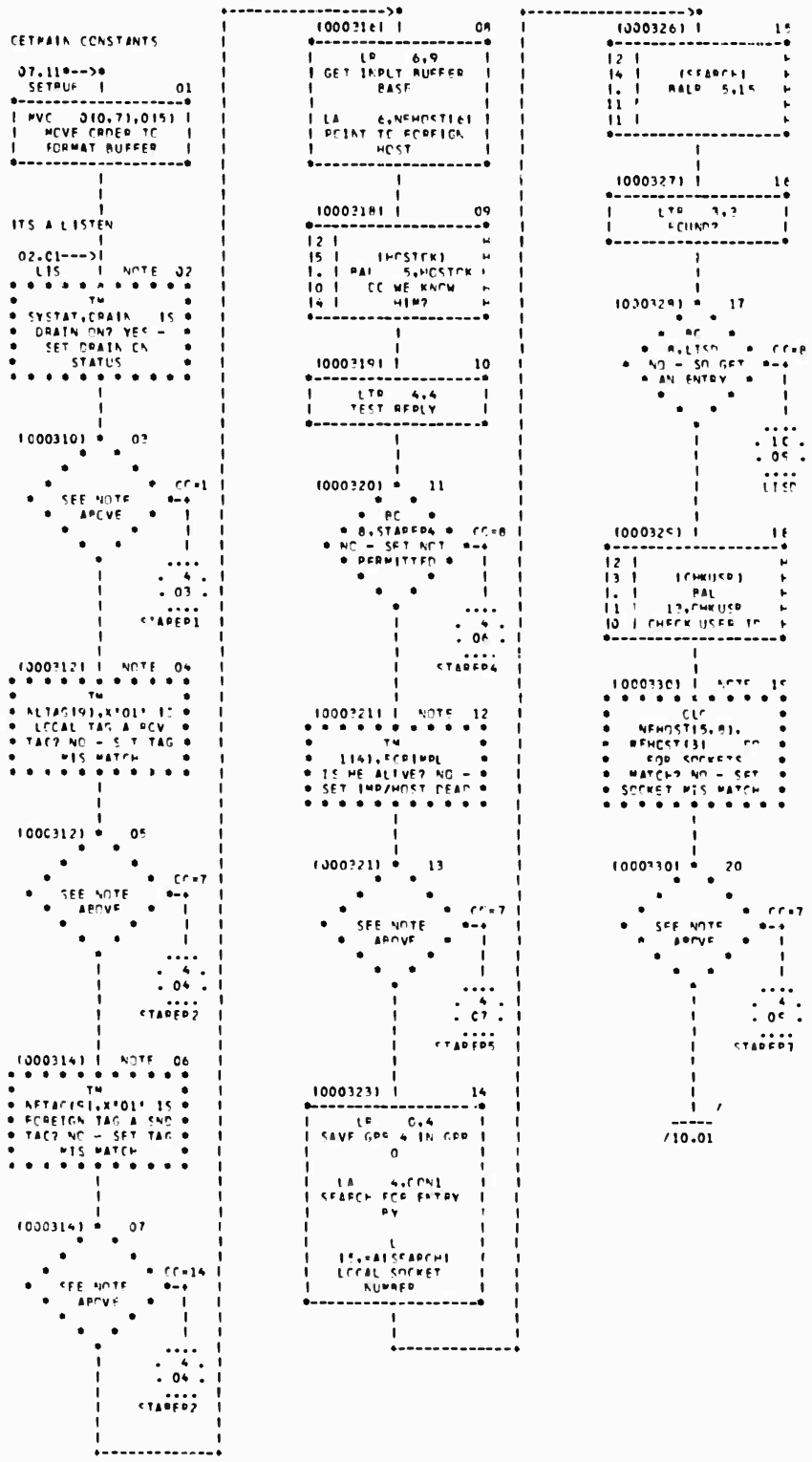

CHART TITLE - 'XFER INTERFACE'

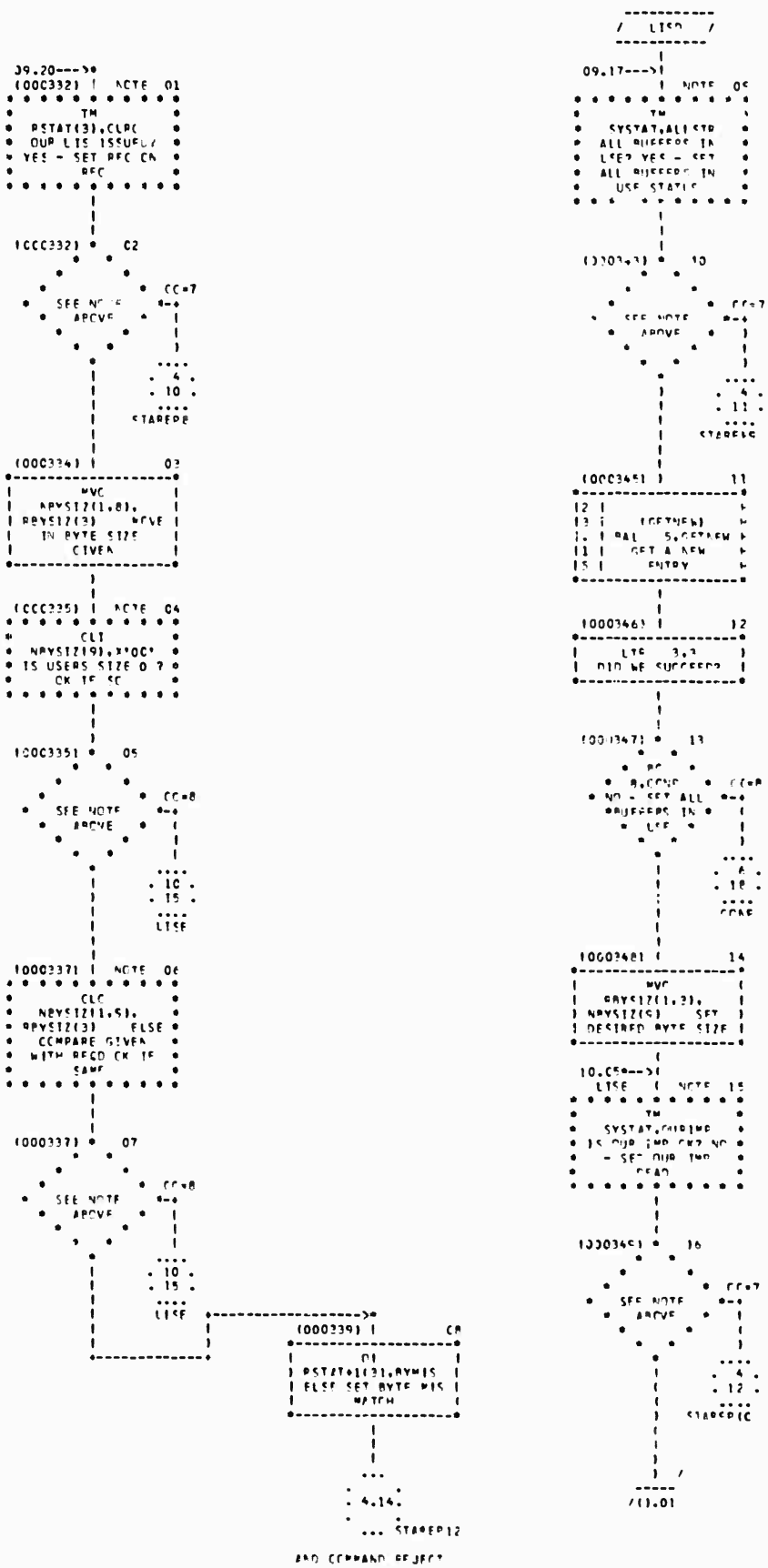

CHART TITLE - 'XFER INTERFACE'

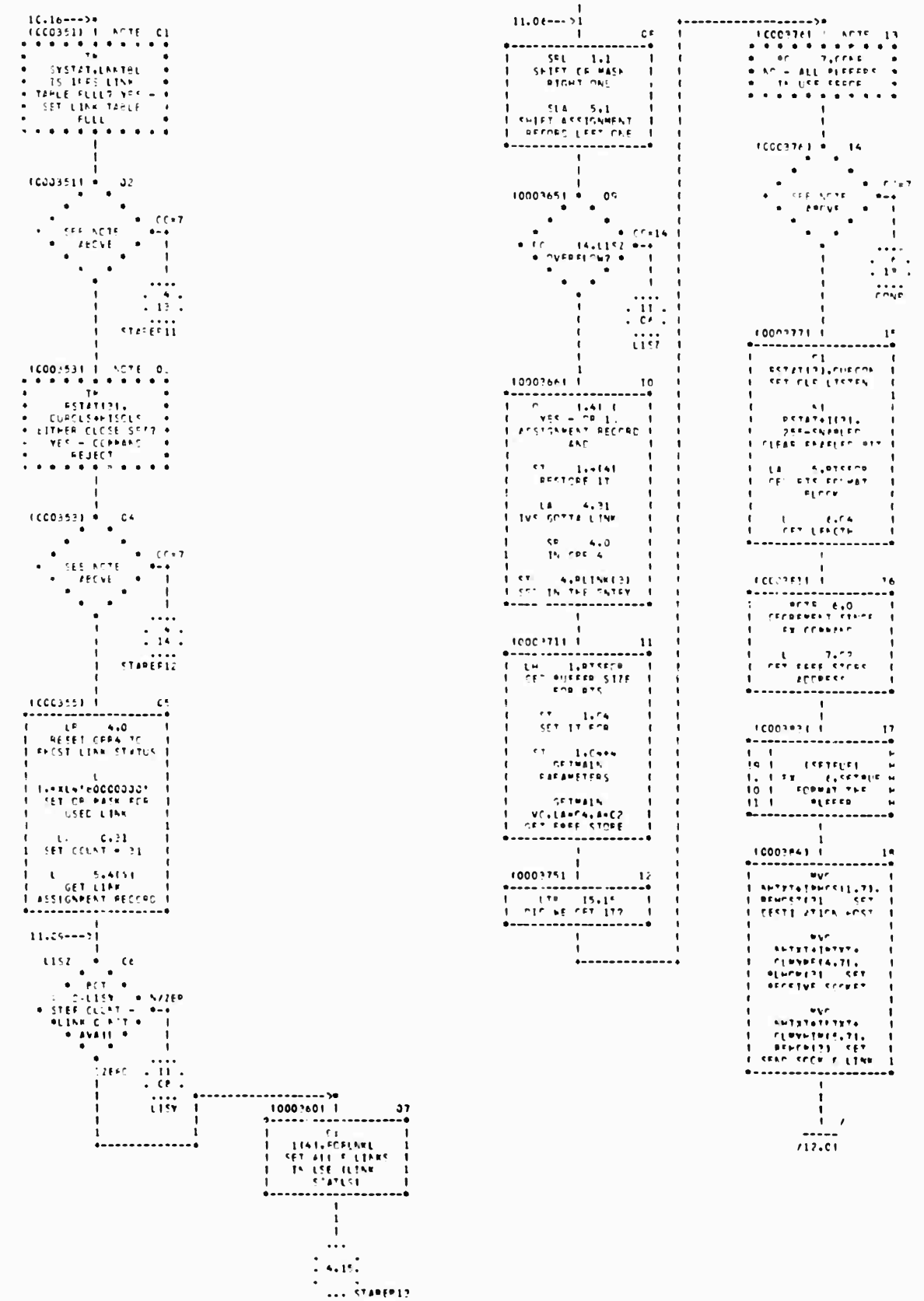

CHART TITLE - 'XFER INTERFACE'

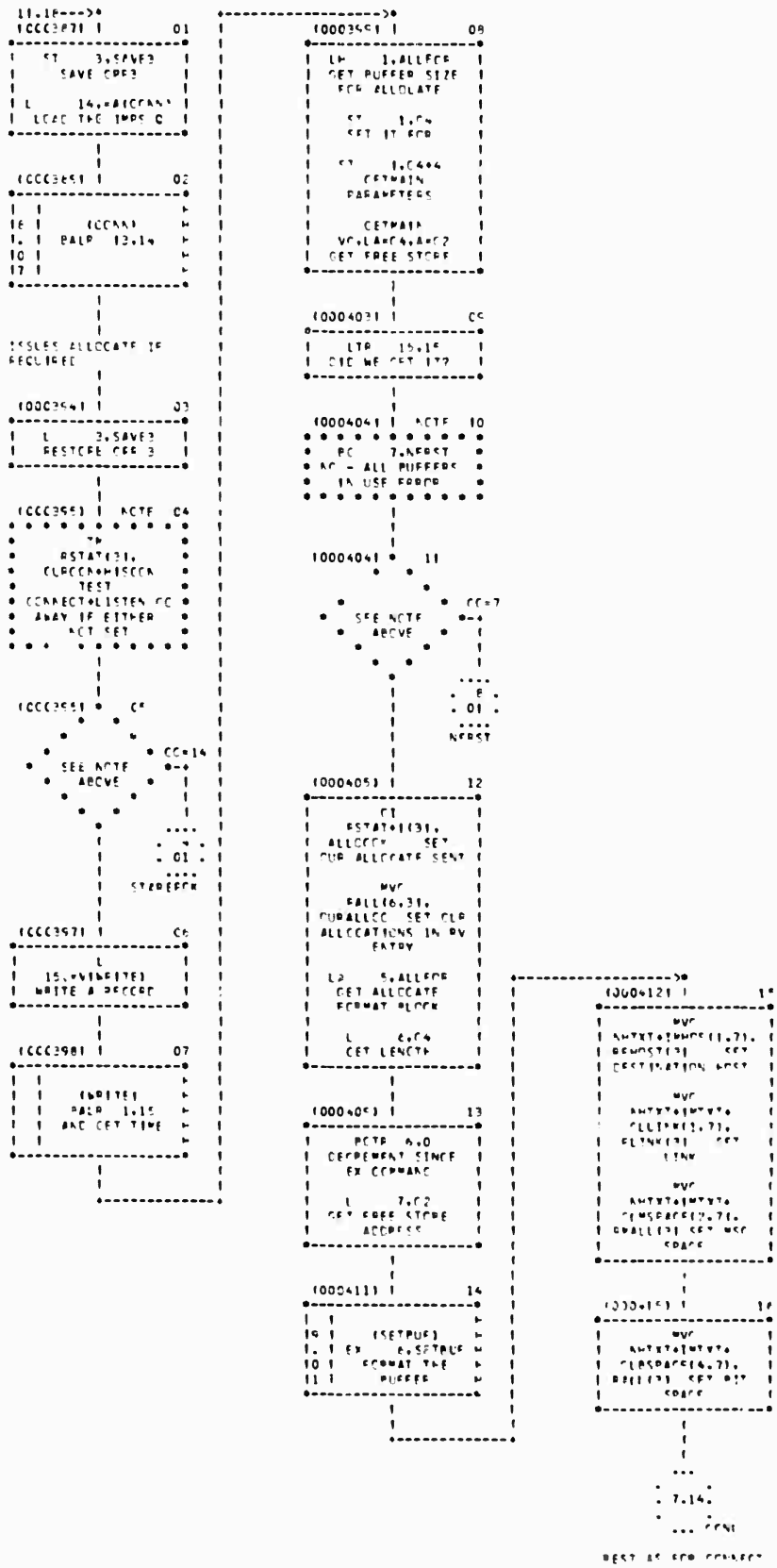

CHART TITLE - *XFER INTERFACE*

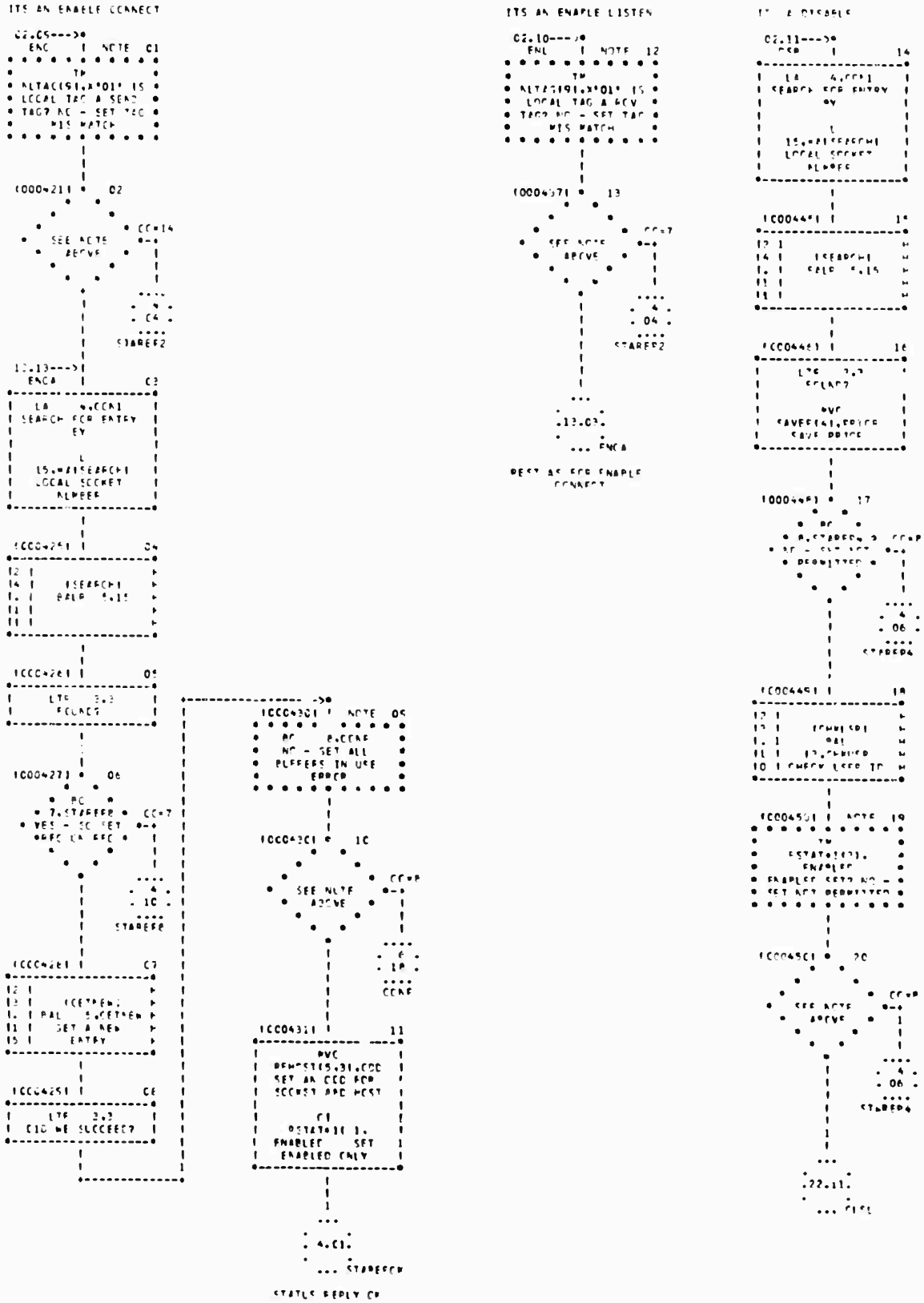

CHART TITLE - 'XFER INTERFACE'

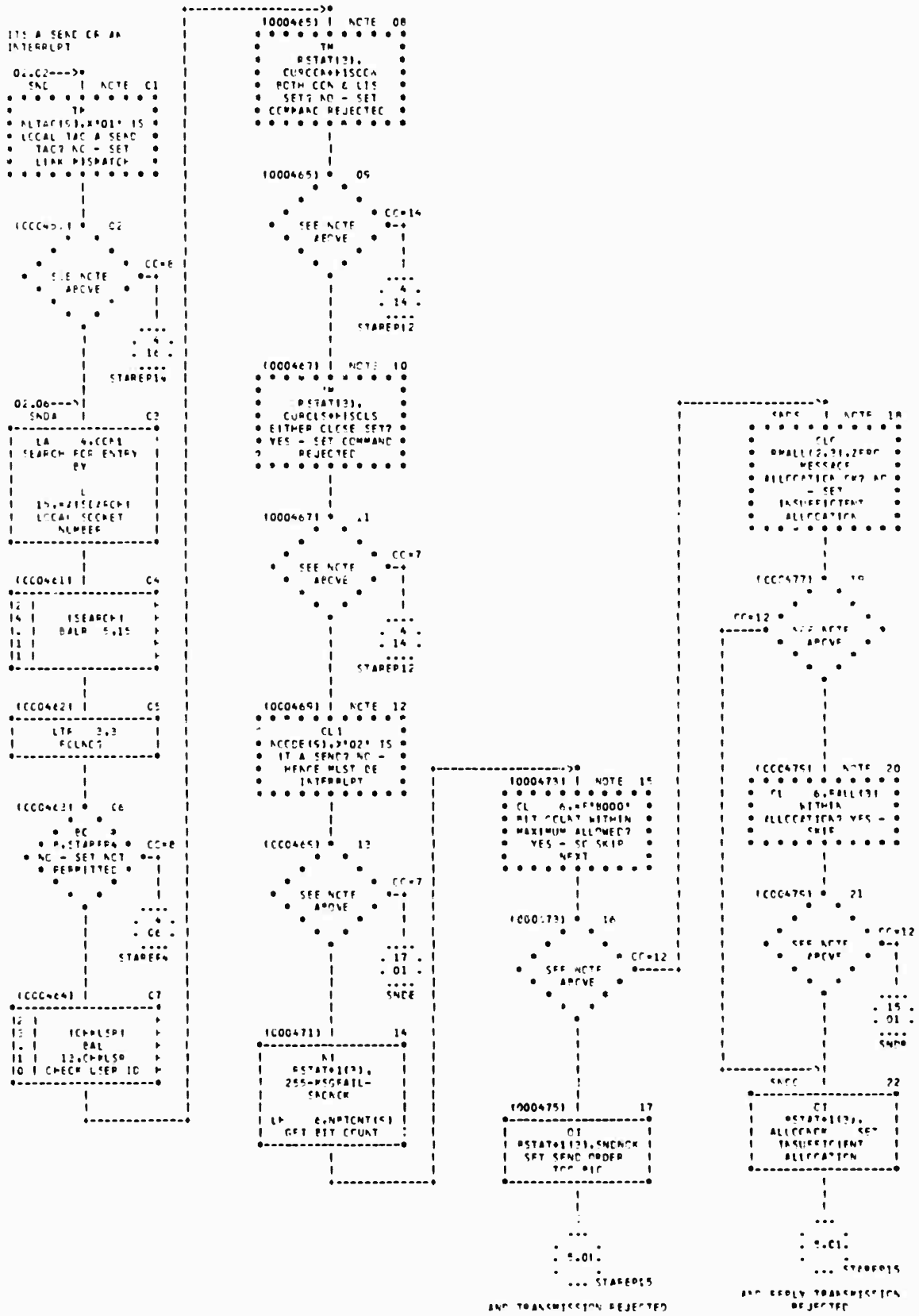

CHART TITLE - 'XFER INTERFACE'

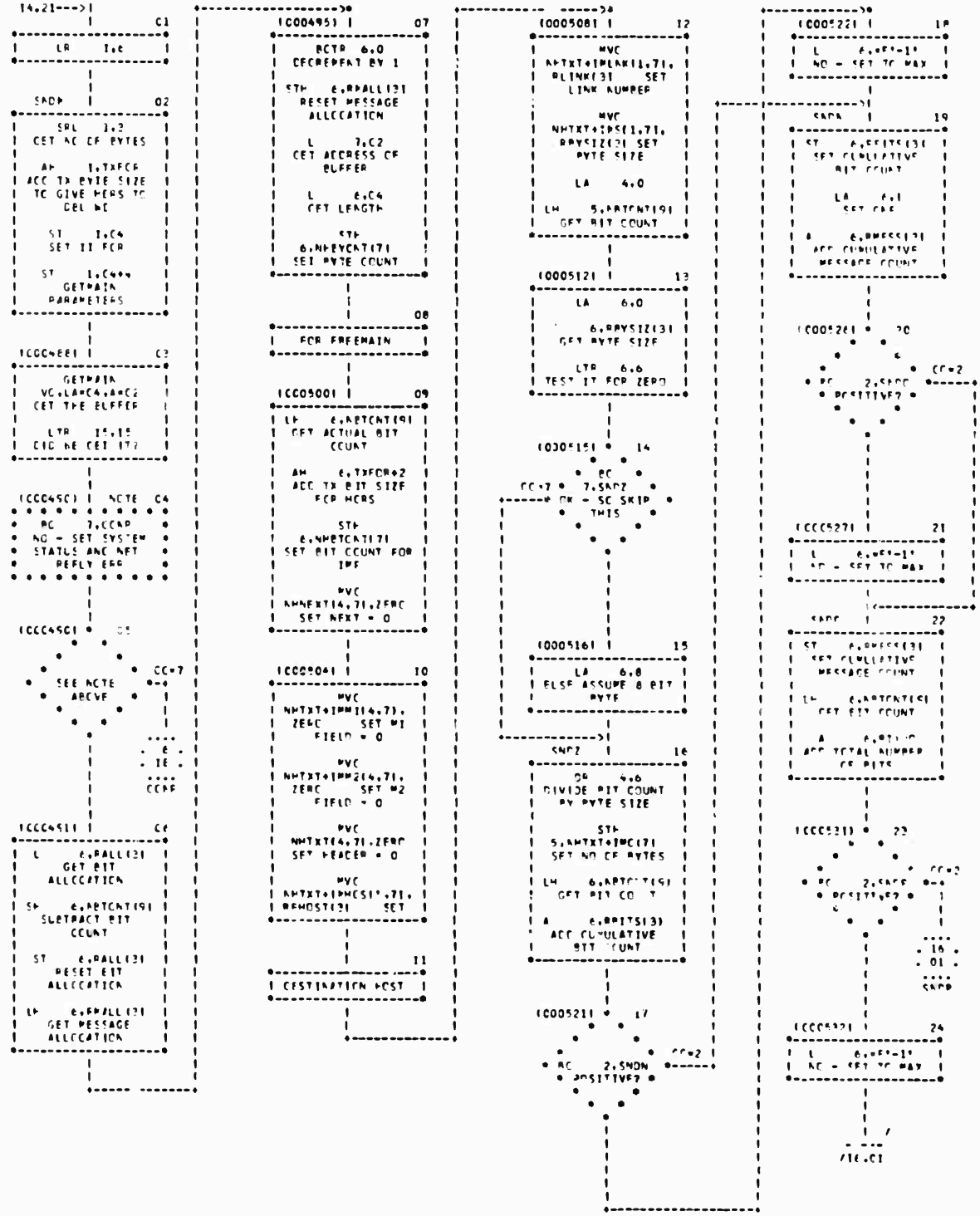

CHART TITLE - 'XFER INTERFACE'

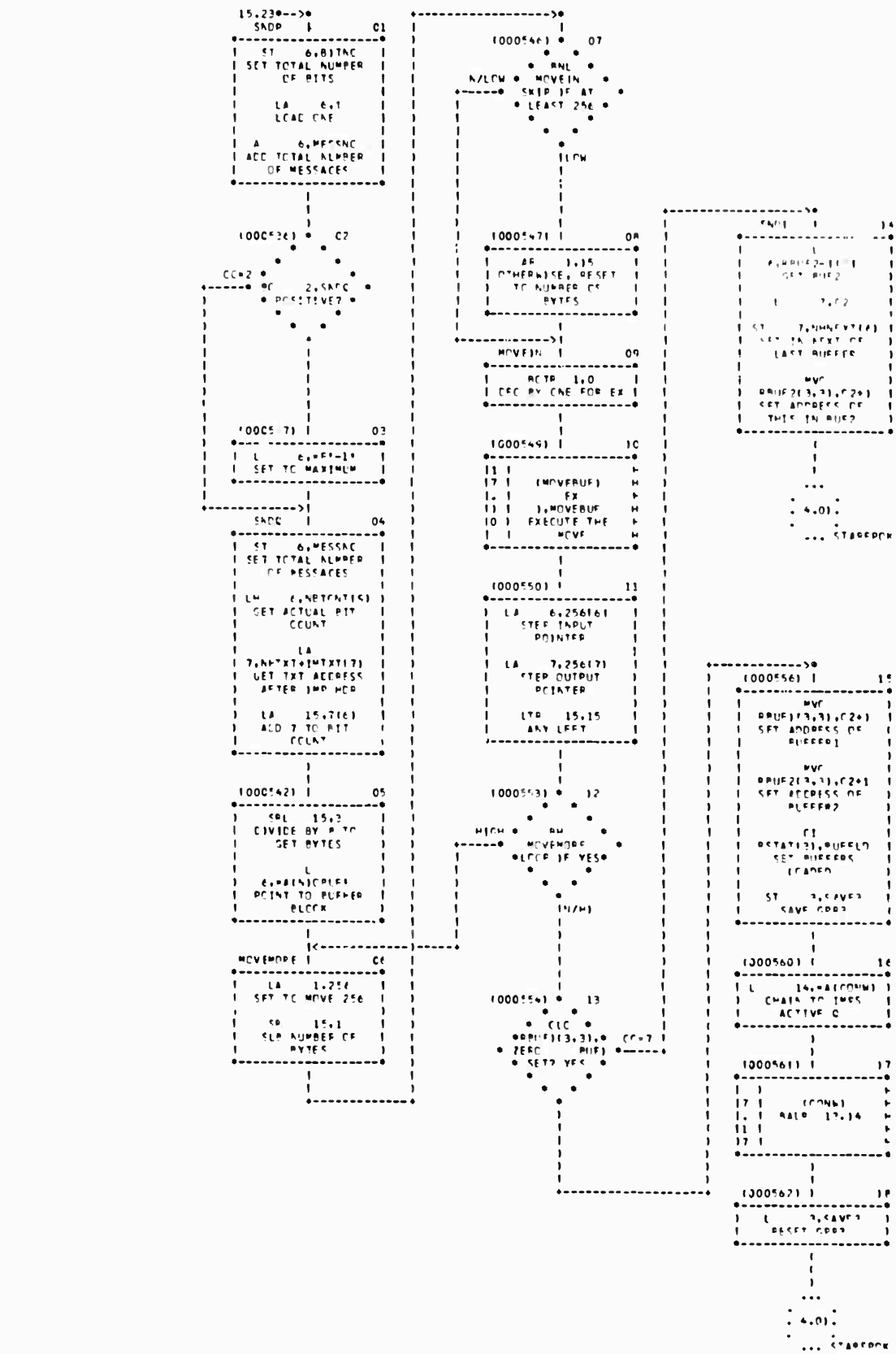

CHART TITLE - 'XFER INTERFACE'

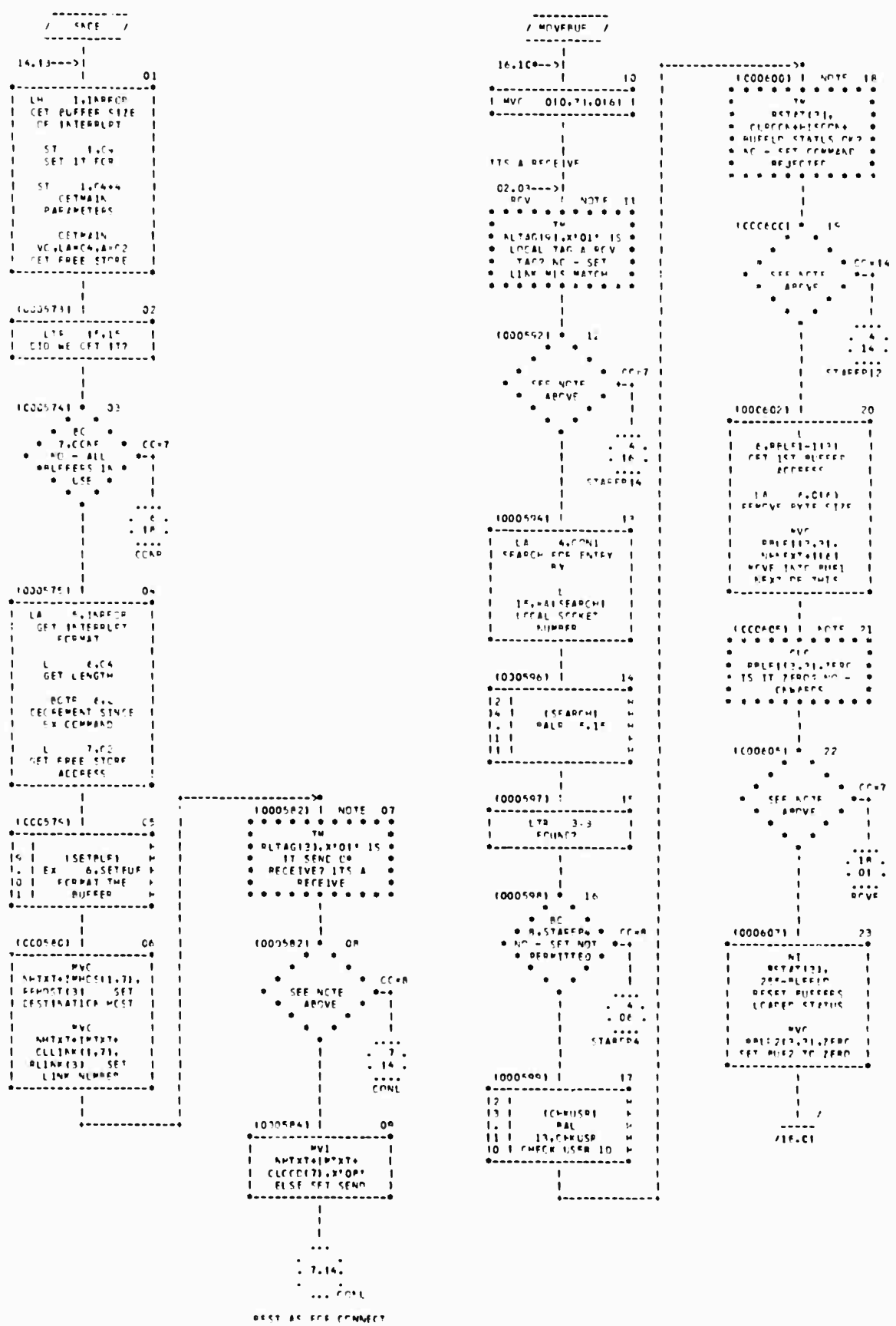

CHART TITLE - 'XFER INTERFACE'

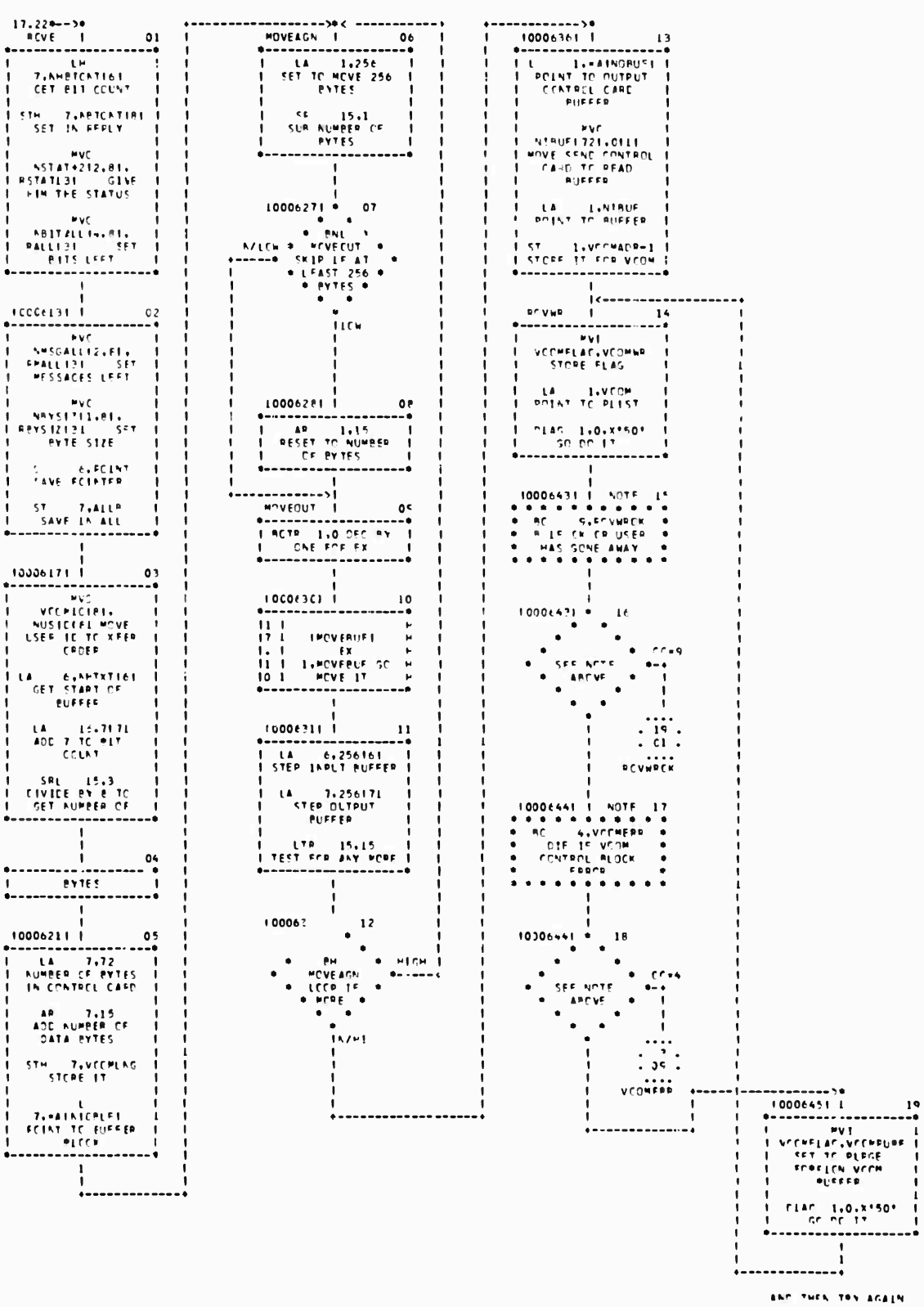

CHART TITLE - 'XFER INTERFACE'

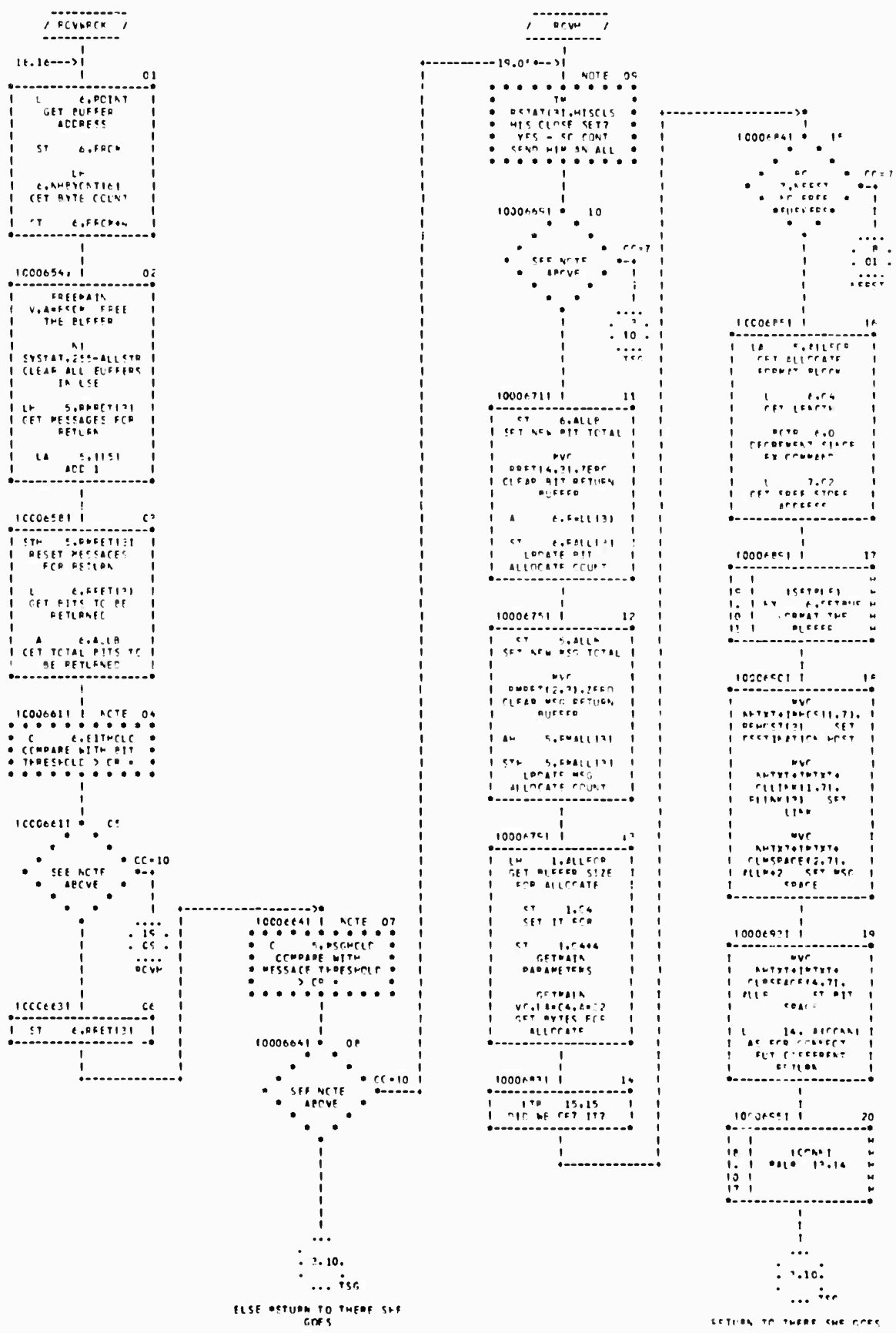

CHART TITLE - 'XFER INTERFACE'

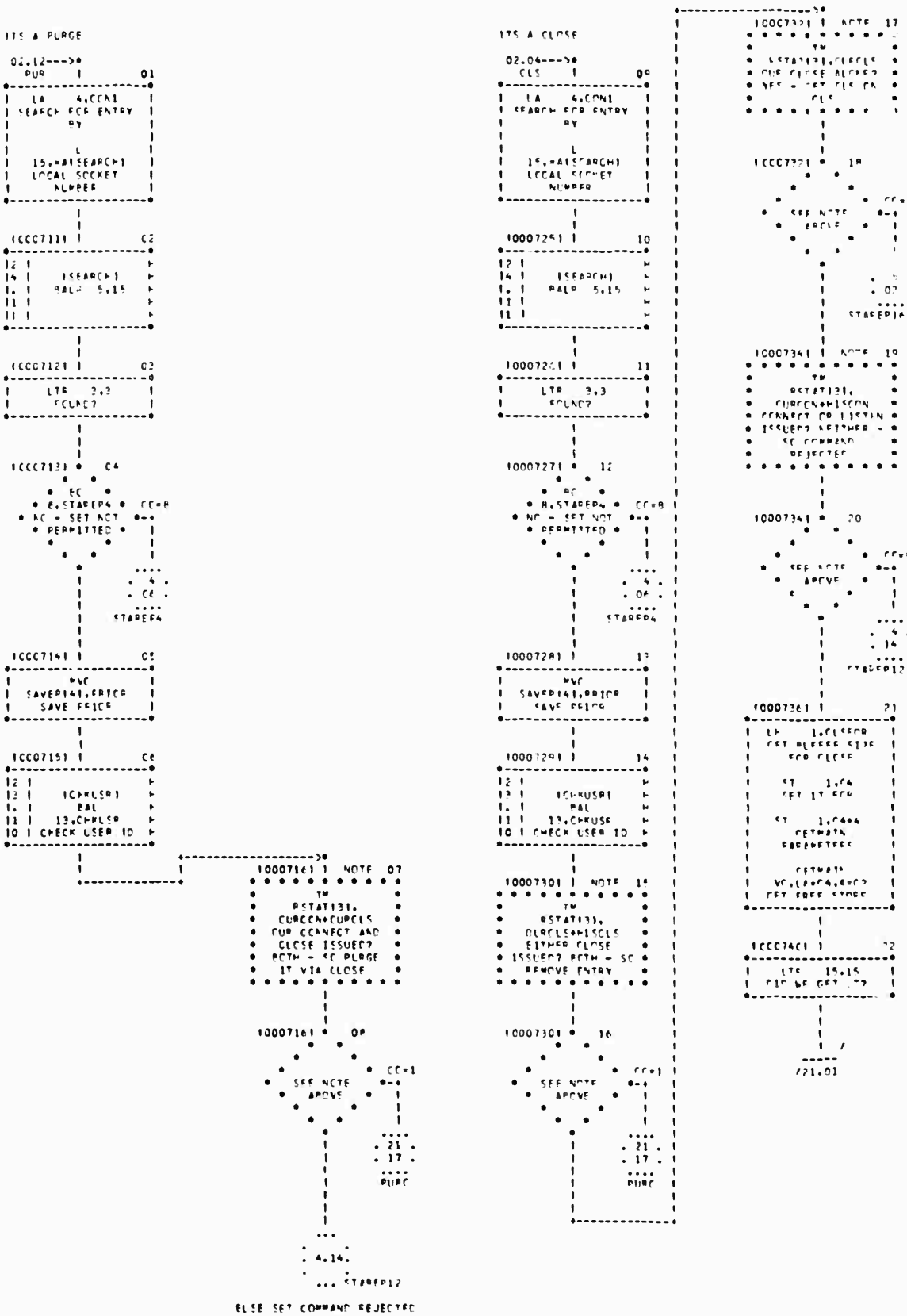

CHART TITLE - 'XFER INTERFACE'

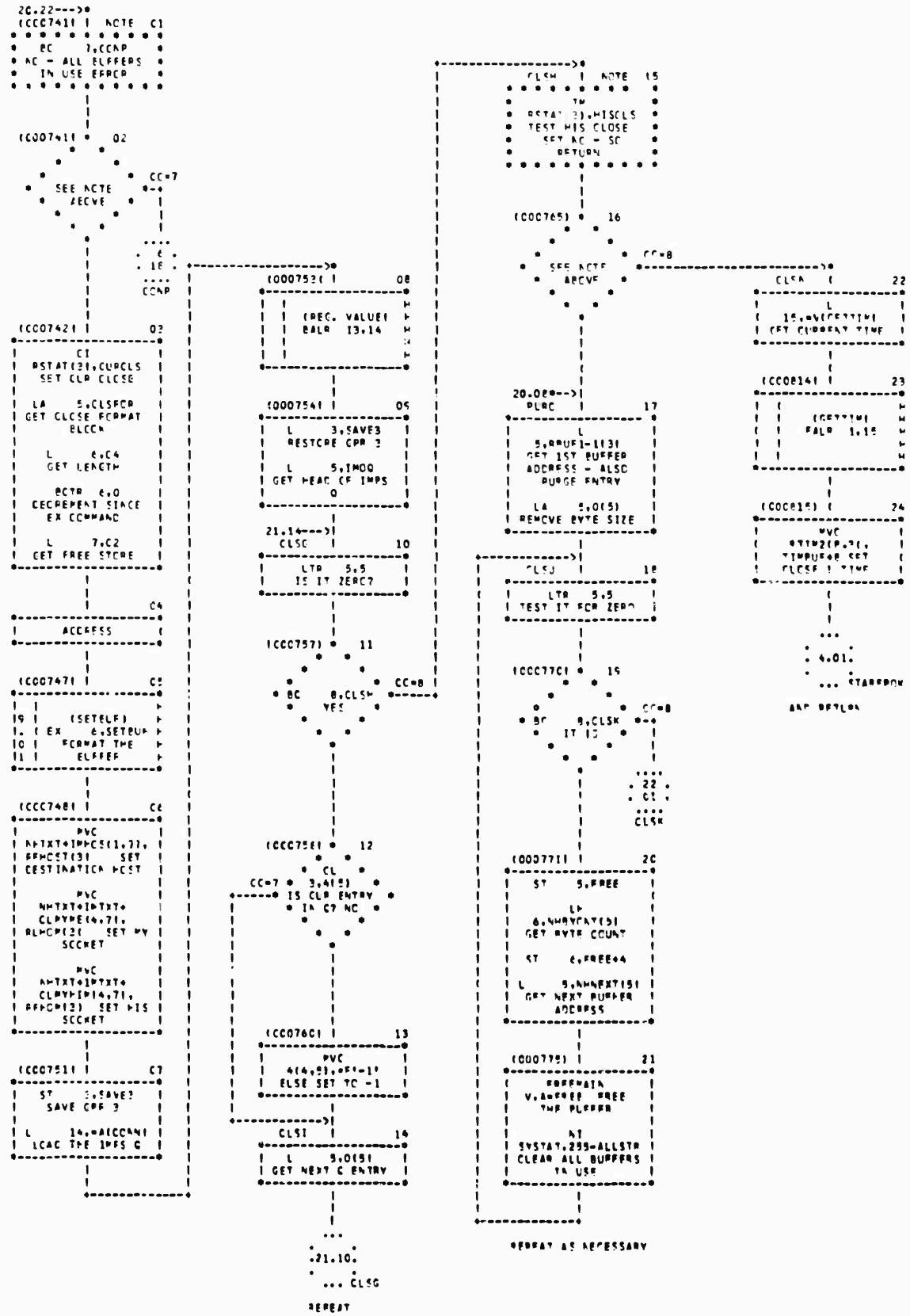

CHART TITLE - 'XFER INTERFACE'

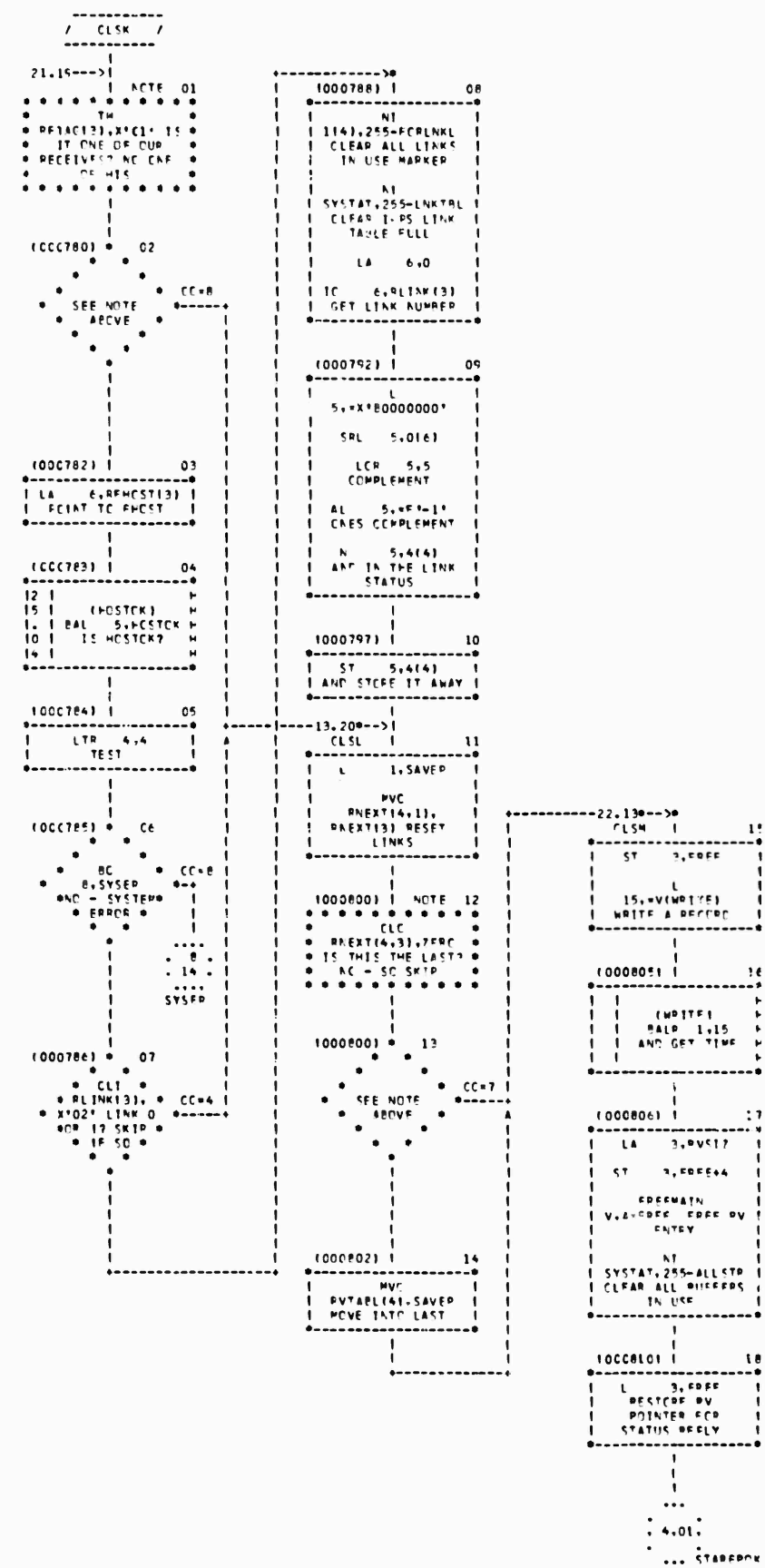

CHART TITLE - 'XFER INTERFACE'

```
ITS A STATUS

 C2.C5--->*
   STA    |          01
*--------------------*
|   LA     4,CCN1    |
| SEARCH FOR ENTRY   |
|        BY          |
|                    |
|          L         |
|   15,=A(SEARCH)    |
|   LOCAL SOCKET     |
|      NUMBER        |
*--------------------*
          |
          |
 (CCC8251 |          02
*--------------------*
|2 |                 |
|4 |     (SEARCH)    |
|. |   BALR  5,15    |
|1 |                 |
|1 |                 |
*--------------------*
          |
          |
 (CCC8261 |          C3
*--------------------*
|     LTR   3,3      |
|      FOUND?        |
*--------------------*
          |
          |
          |
 (CCC8271 *   C4
        *   *
      *  BC   *
    * 8,STAREF4 *  CC=8
  * NO - SET NOT  *-+
    * PERMITTED *  |
      *        *   |
        *    *     |
          *        ....
          |      .  4  .
          |      . C8  .
          |        ....
          |     STAREF4
          |
          |
 (CCC8281 |          C5
*--------------------*
|2 |                 |
|3 |     (CHKLSR)    |
|. |       BAL       |
|1 |   13,CHKLSR     |
|0 | CHECK USER ID   |
*--------------------*
          |
          |
 (CCC8291 |          C6
*--------------------*
|        MVC         |
| NSTAT(1,8),SYSTAT  |
|   GIVE HIM THE     |
|   SYSTEM STATUS    |
|                    |
|        NI          |
|     NSTAT(8),      |
|  255-GRAIN  DCNT   |
|   PASS GRAIN CN    |
|                    |
|     LR    6,3      |
|  GET ENTRY BASE    |
|                    |
| LA    6,REMCST(3)  |
| POINT TO FOREIGN   |
|       HOST         |
*--------------------*
          |
          |
 (CCC8331 |          C7
*--------------------*
|2 |                 |
|5 |     (HOSTCK)    |
|. | BAL   5,HOSTCK  |
|0 |   OC WE WACK    |
|4 |       HIM?      |
*--------------------*
          |
          |
          *--------------*
```

```
*********************
*********************
*********************
******
ROUTINE TO CHECK THE
USERS ID
REGISTERS ARE AS
FOLLOWS:-
R   -  REPLY BUFFER
S   -  INPUT BUFFER
11  -  LOCAL BASE AS
REFORE
12  -  COMMON BASE
13  -  LINK REGISTER
*********************
*********************
*********************
******

 C6.110-->*
  CHKUSR  |  NOTE  12
* * * * * * * * * * *
*        CLC        *
*    RUSTCIR,31,    *
* NUSTCIS1 USER IDS *
* AGREES? BCR   8,13 *
*   YES - RETURN    *
* * * * * * * * * * *
          |
          |
          |
 (0000781 *   11
        *   *
      *       *
    *          *  CC=9
  *   SEE NOTE    *-+
    *   ABOVE     *  |
      *       *    |
        *   *      |
          *        ....
          |      .    .
          |      .    .
          |        ....
          | REG. VALUE
          |
          |
 (0000801 |  NOTE  12
* * * * * * * * * * *
*        CLC        *
*    RUSTCIR,31,    *
* CONTROL UNKNOWN? *
*   NO - SET NOT    *
*     PERMITTED     *
* * * * * * * * * * *
          |
          |
          |
 (0000801 *   13
        *   *
      *       *
    *          *  CC=7
  *   SEE NOTE    *-+
    *   ABOVE     *  |
      *       *    |
        *   *      |
          *        ....
          |      .  4  .
          |      . C8  .
          |        ....
          |     STAREF4
          |
          |
 (0000821 |          14
*--------------------*
|        MVC         |
|    RUSTCIR,31,     |
|   NUSTCIS1 SET     |
|     KNOWN ID       |
*--------------------*
          |
          |
          |
          ...
        .     .
        .     .
        .     .
          ... REG. VALUE

   RETURN RC     13
```

```
CONSTANTS

*********************
*********************
*********************
******
GET A NEW ENTRY FOR
XFER
REGISTERS ARE AS
FOLLOWS:-
3   -   ADDRESS OF
NEW ENTRY
5   -   LINK
6   -   INPUT BUFFER
FROM NET
*********************
*********************
*********************
******

 06.150-->*
  GETNEW  |          15
*--------------------*
|      GETDATA       |
|  WC,LA=TC,A=FROM   |
| GET FREE STORAGE   |
|                    |
|    LTR   15,15     |
|  GTO WE GET IT?    |
|                    |
|     LR    3,0      |
*--------------------*
          |
          |
          |
 (CCC5041 *   16
        *   *
      *       *
    *          *  CC=7
  *   BCR   7,5    *-+
    * NO RETURN *    |
      *       *      |
        *   *        |
          *          ....
          |        .    .
          |        .    .
          |          ....
          | REG. VALUE
          |
          |
 (CCC5051 |          17
*--------------------*
|   L      3,FROM    |
|    FREE STORE      |
|      ADDRESS       |
|                    |
|        MVC         |
|   RSTCR(17,3),     |
| NUSTCIS1      MOVE |
| IN USERID - STAR   |
|                    |
|        MVI         |
|   RLINK(3),X'00'   |
|    CLEAR LINK      |
|                    |
|        MVC         |
| RSTATERVS(7-18,3)  |
|     ,RLINK(3)      |
|   CLEAR REST OF    |
*--------------------*
          |
          |
          |        18
*--------------------*
|       ENTRY        |
*--------------------*
          |
          |
 (CCC5CC1 |          19
*--------------------*
|          L         |
|   4,=V(GETTIME)    |
*--------------------*
          |
          |
          |
          |  /
        -----
       /24.C1
```

```
 (0000841 |          08
*--------------------*
|        MVC         |
|   NSTAT+2(2,8),    |
|  RSTAT(3)     SET  |
|   CLC BY STATUS    |
|                    |
|        NI          |
|      RSTAT(3),     |
| 255-INTRPST CLEAR  |
|  STATUS FLAGS IN   |
|       ENTRY        |
|                    |
|        MVC         |
|   NEWCST(5,8),     |
| REMOST(3)     SET  |
|    THE FOR SKT     |
*--------------------*
          |
          |
          |
        ...
      .     .
      . 4.C2.
      .     .
        ... STCK1

  THATS ALL FOLKS
```

CHART TITLE - 'XFER INTERFACE'

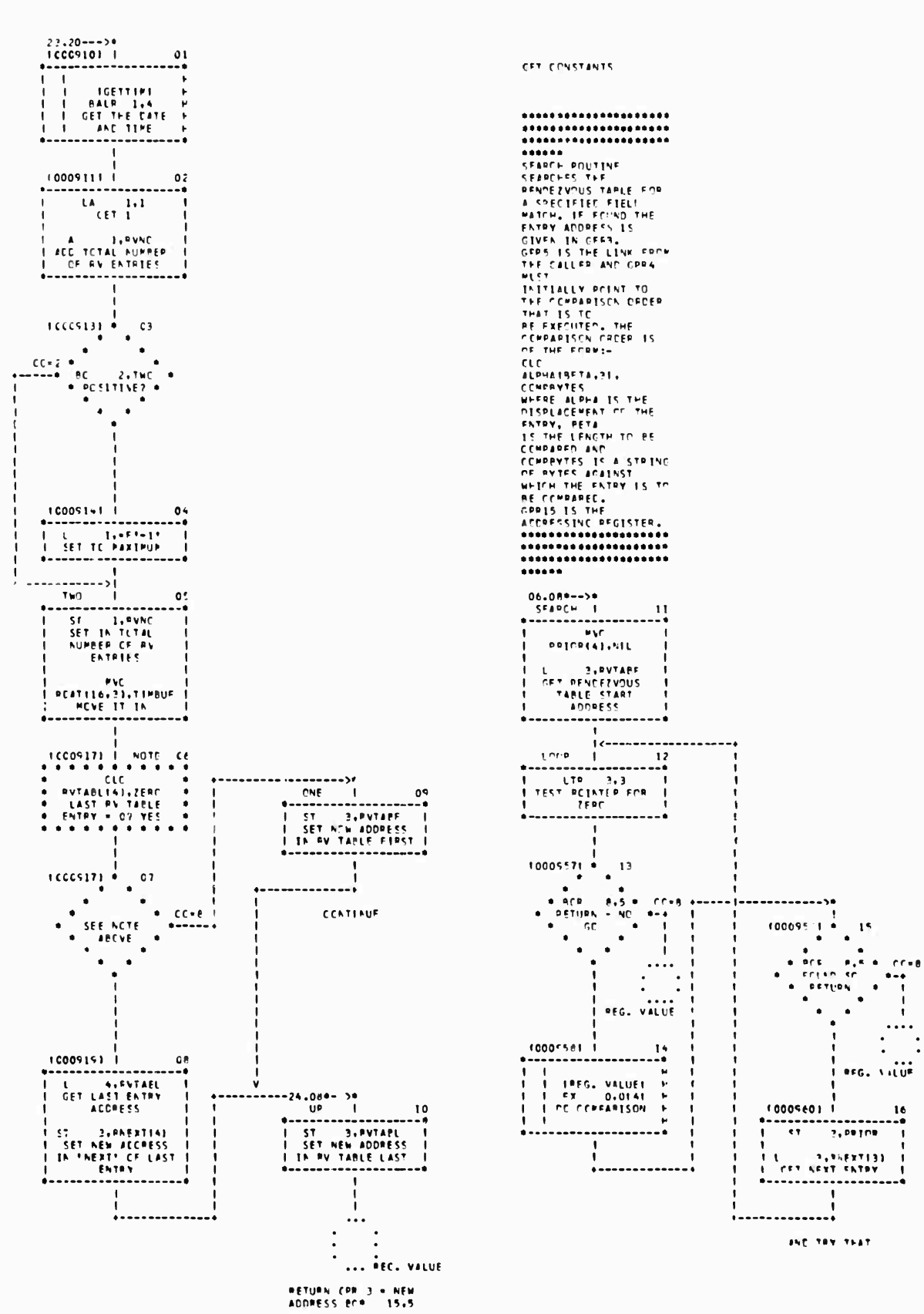

CHART TITLE - 'XFER INTERFACE'

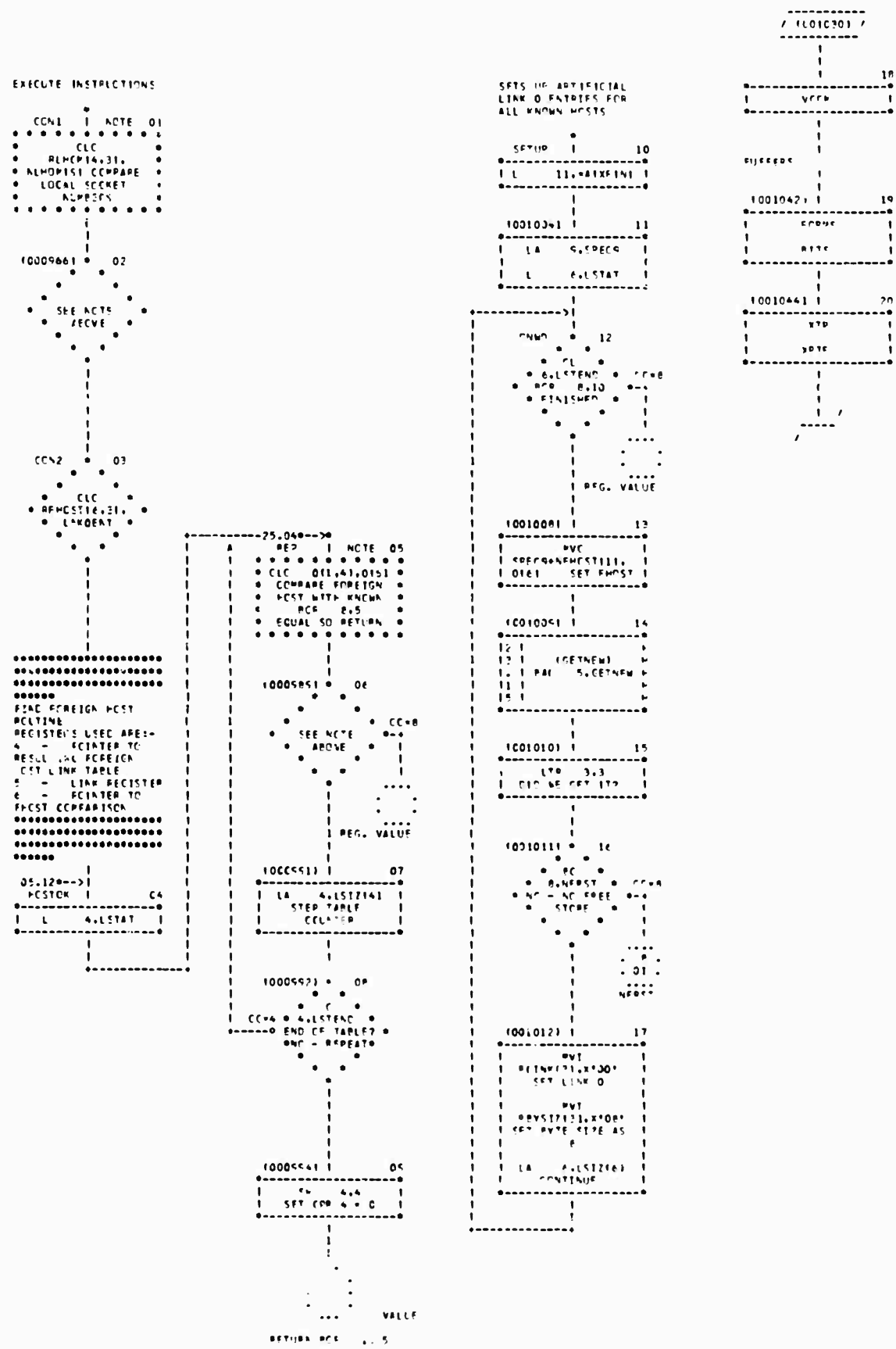

CHART TITLE - CONSTANTS AND STORAGE AREAS

```
(0000255)  C2        DC    1F'0'
(0000300)  C3        DC    2F'8'
(0000301)  C4        DC    2F'C'
(0000    2)  SAVE3   DC    1F'0'
         3)  CHRALLOC DC   1F'32000',H'100'
.0       :)  ALLH    DC    1F'C'
(0000700)  ALLR      DC    1F'0'
(0000701)  POINT     DC    1F'C'
(0000702)  FRCP      DC    2F'C'
(0000703)  BITHCLD   DC    1F'1000'        BIT THRESHOLD
(0000704)  MSGHCLD   DC    1F'100'         MESSAGE THRESHOLD
(0000181)  FREE      DC    1D'C'
(0000E07)  CONTHRCH  DC    CL8'????????'
(0000525)  TC        DC    2AL4(RV512)     SIZE OF ENTRY
(0000520)  ZERC      DC    1F'0'           ZERC SOURCE
(0000568)  LANDEAT   DC    1F'0'
(0000565)            DC    1F'C'
(0000570)  FRICP     DC    1F'0'
(0000571)  NIL       DC    1F'C'
(0001017)  SPECS     DC    XL1'00'         CODE
(0001018)            DC    CL8'NCP'        USER ID
(0001019)            DC    21X'00'         REST
(0001020)            DC    X'CE'           BYTE SIZE
(0001021)  SAVEF     DC    1F'C'
(0001022)  CCC       DC    XL8'FFFFFFFFFFFFFFFF'
(0001023)  CRASH     DC    1F'-1'
(0001024)  ERBLF     DC    1F'C'
(0001025)  CODE33    DC    CL4' 33 '
(0001026)  CODE34    DC    CL4' 34 '
(0001027)  CODE35    DC    CL4' 35 '
(0001028)  CODE36    DC    CL4' 36 '
(0001038)  NOBUF     DC    18F'0'          NET OUTPUT BUFFER
(0001039)  NIBUF     DC    18F'0'          NET INPUT BUFFER
(0001040)  NICBUF    DC    256F'C'         SPACE FOR I/O BUFFER
```

CHART TITLE - 'IMP INPUT INTERFACE'

```
 -----------
/   IMPI   /
-----------
     |
     |
     | NOTE  01
* * * * * * * * * *
*     START C     *
* * * * * * * * * *
     |
     |
**********************
**********************
**********************
******
IMP IN ROUTINE
ENTRY IS EITHER AT
IMPIA (DEFAULT) OR
RIMPIN.
INITIAL ENTRY DECIDES
WHETHER SICS ARE USED
OR NOT.
REGISTERS ARE AS
FOLLOWS:-
7   -  RCRT TABLE
POINTER
8   -  LOCAL BASE 2
10  -  RETURN LINK
THROUGH RN1
11  -  LOCAL BASE 1
12  -  COMMON BASE
**********************
**********************
**********************
******
     |
     |
  RIMPIN  |        02
*--------------------*
|        MVC         |
|   NEXT141,REFL     |
|      REPLACE       |
|  ARTIFICIAL WITH   |
|       REAL         |
*--------------------*
     |
     |
  IMPIN   |        03
*--------------------*
|    BALR  11,0      |
|  ARTIFICIAL IMP    |
|       ENTRY        |
*--------------------*
     |
     |
 (CC00401 |        04
*--------------------*
| L      11,BASE1    |
| NOW GET START AS   |
|       BASE         |
|                    |
|        LA          |
|   8,X'FFF'(11)     |
|                    |
|   LA     8,IIPI    |
|  GET SECOND BASE   |
*--------------------*
     |
     |
     |
ALL RETURNS FROM
NCRIMPI ROUTINES COME
HERE
     |
 05,060-->|
  ENDIMP  |        05
*--------------------*
|      L     7,A     |
|  GET RCRT TABLE    |
|      POINTER       |
*--------------------*
     |
     |
     |
```

```
 -----------
/   REFL   /
-----------
     |
     |
     | IO
    ...
   . . .
   . 3.CO.
   . . .
    ... REAL

REPLACED BY THIS - REAL
IMP BRANCH
```

```
 (CC00461 |  NOTE  06
* * * * * * * * * * *
*        CLC       *
*   BYSAV(2),NLLL  *
*  ANY BYTES LEFT?? *
* NO - GO GET SCME  *
*       MORE       *
* * * * * * * * * * *
          |
          |
          |
 (CC00462) *   07
          *   *
        *       *
      *           *  CC+8
    *   SEE NOTE    *------------------------>*
      *   ABOVE   *                    NEXT   | 09
        *       *                              ...
          *   *                              . . .
            *                                . 2.01.
            |                                . . .
            |                                  ... ADVIS
            |
            |                      DEFAULT IS ARTIFICIAL IMP
            |                            - MAY BE
            |
 (0000481 |        08
*--------------------*
|   L      2,POINT   |
|   ELSE GET THE     |
|  PROPER POINTER    |
*--------------------*
          |
          |
          |
         ...
        . . .
        . 4.IC.
        . . .
         ... NX

AND GO ANALYSE SOME MORE
```

CHART TITLE - 'IMP INPUT INTERFACE'

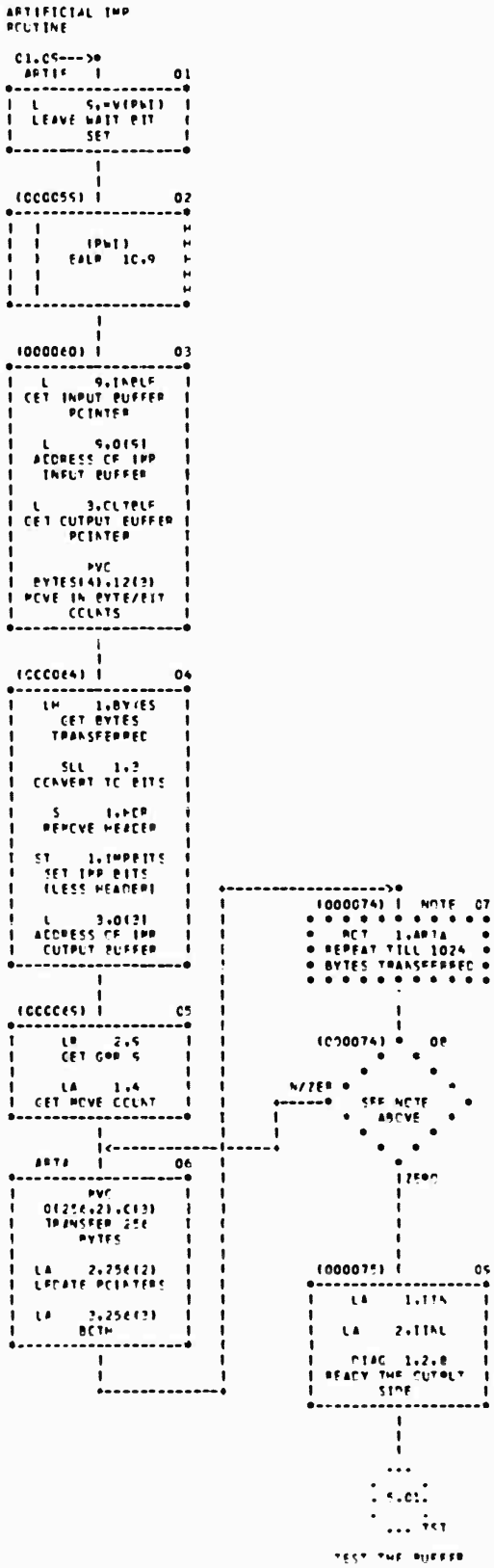

CHART TITLE - 'IMP INPUT INTERFACE'

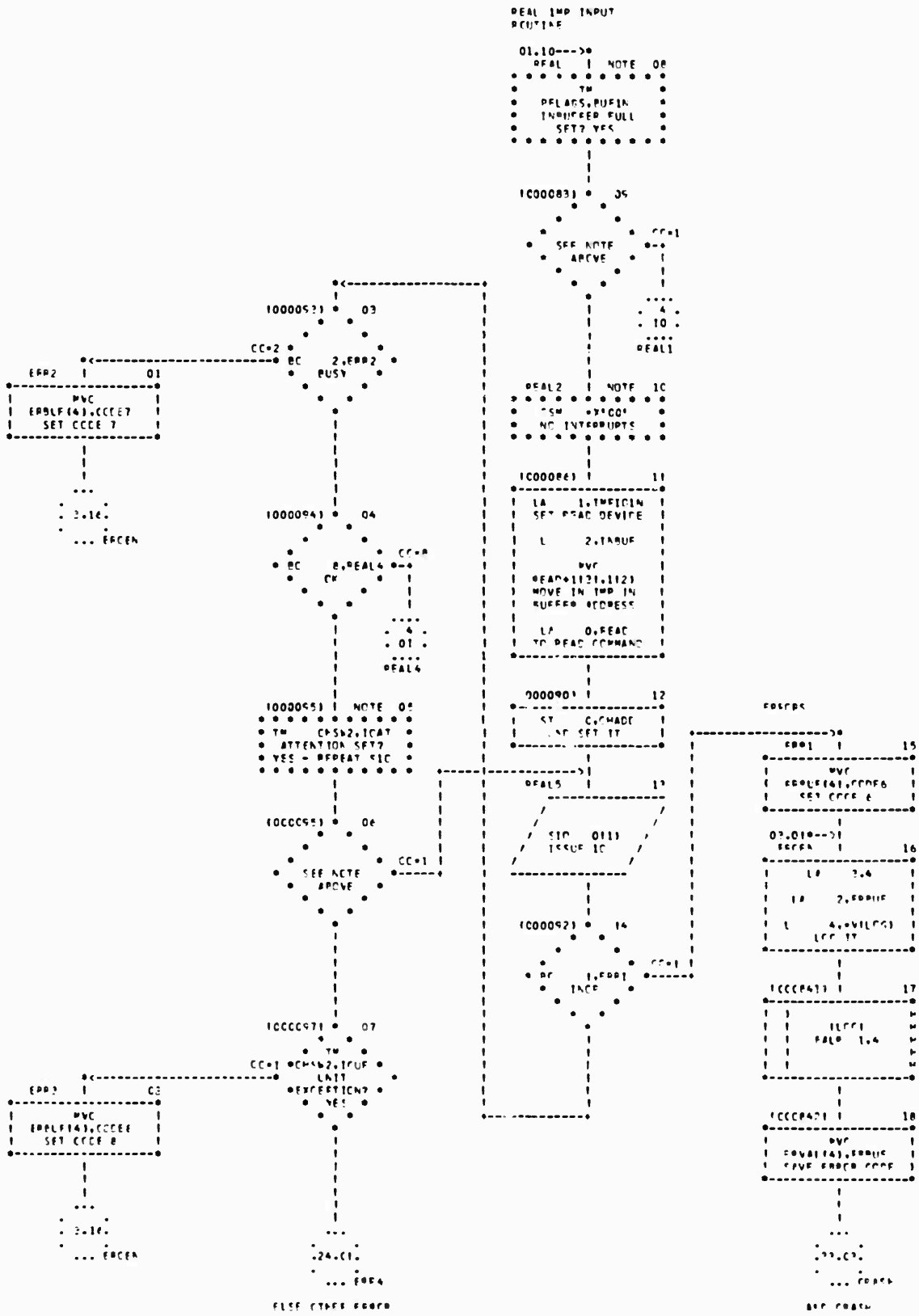

CHART TITLE - 'IMP INPUT INTERFACE'

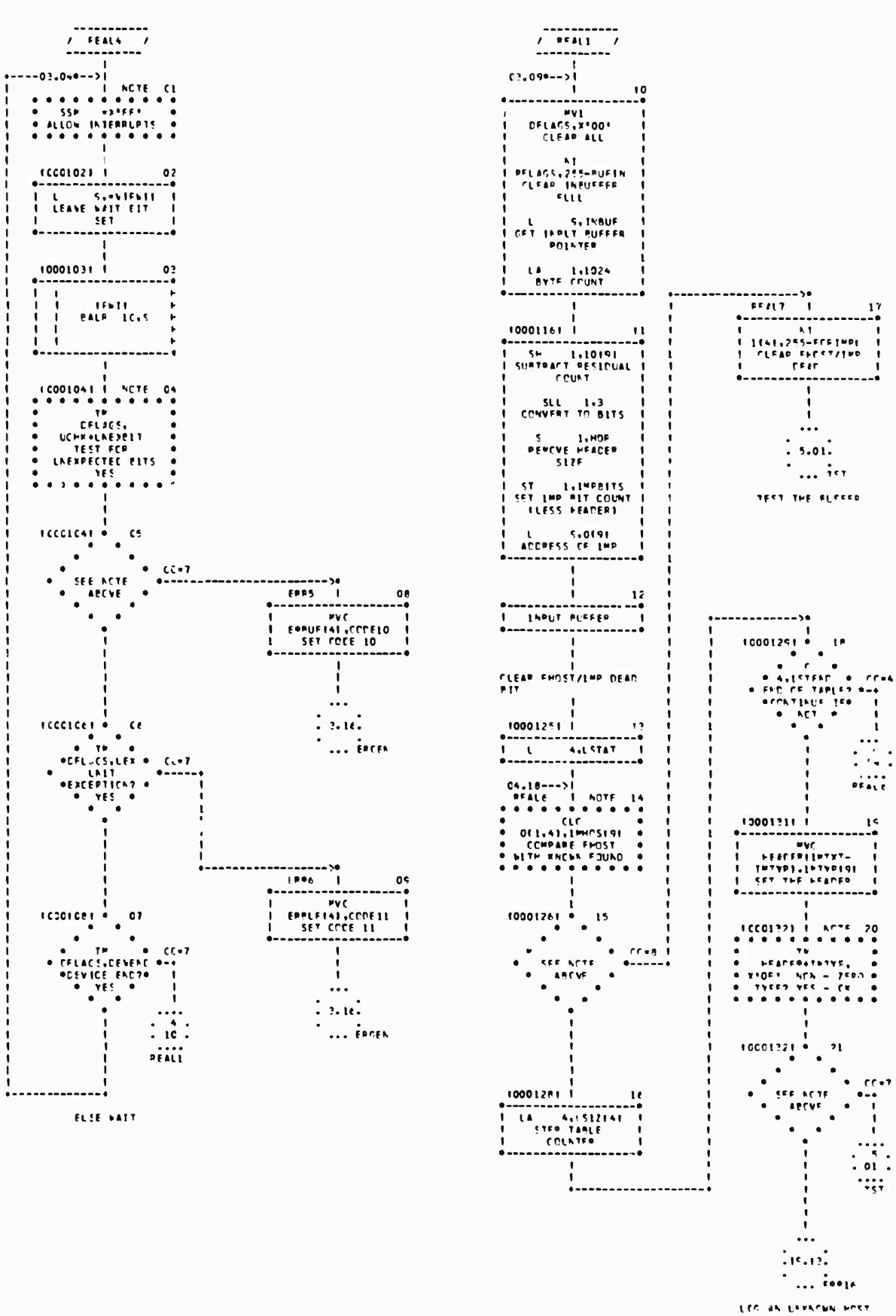

CHART TITLE - 'IMP INPUT INTERFACE'

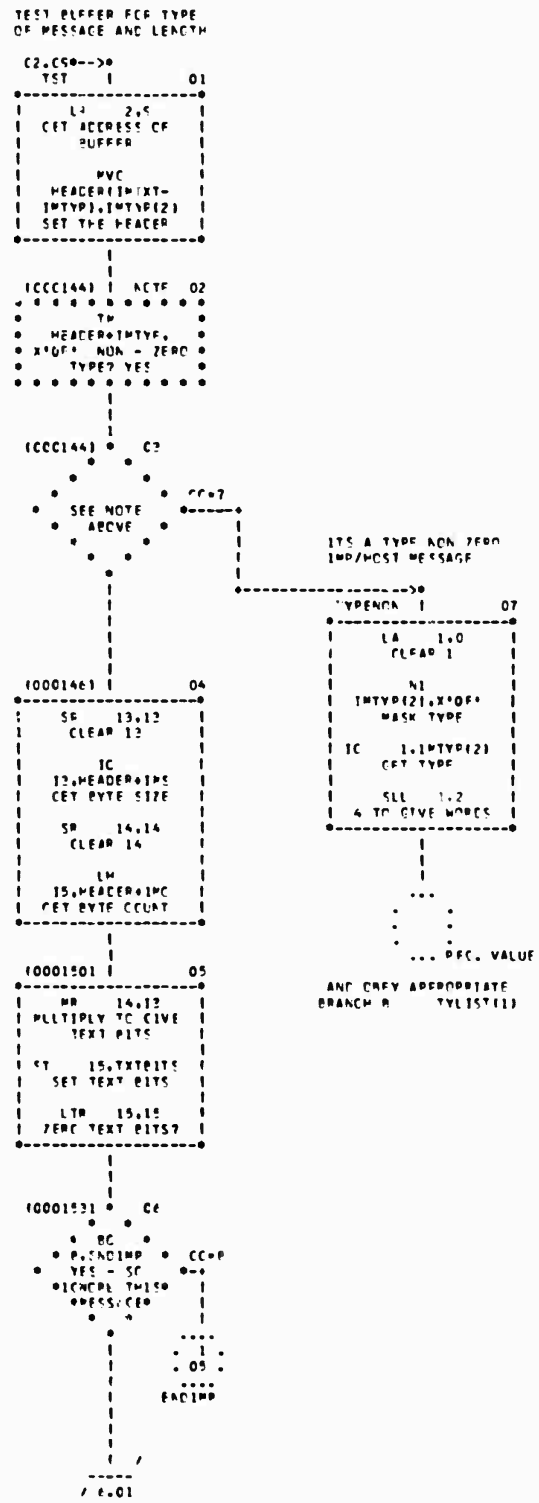

CHART TITLE - 'IMP INPUT INTERFACE'

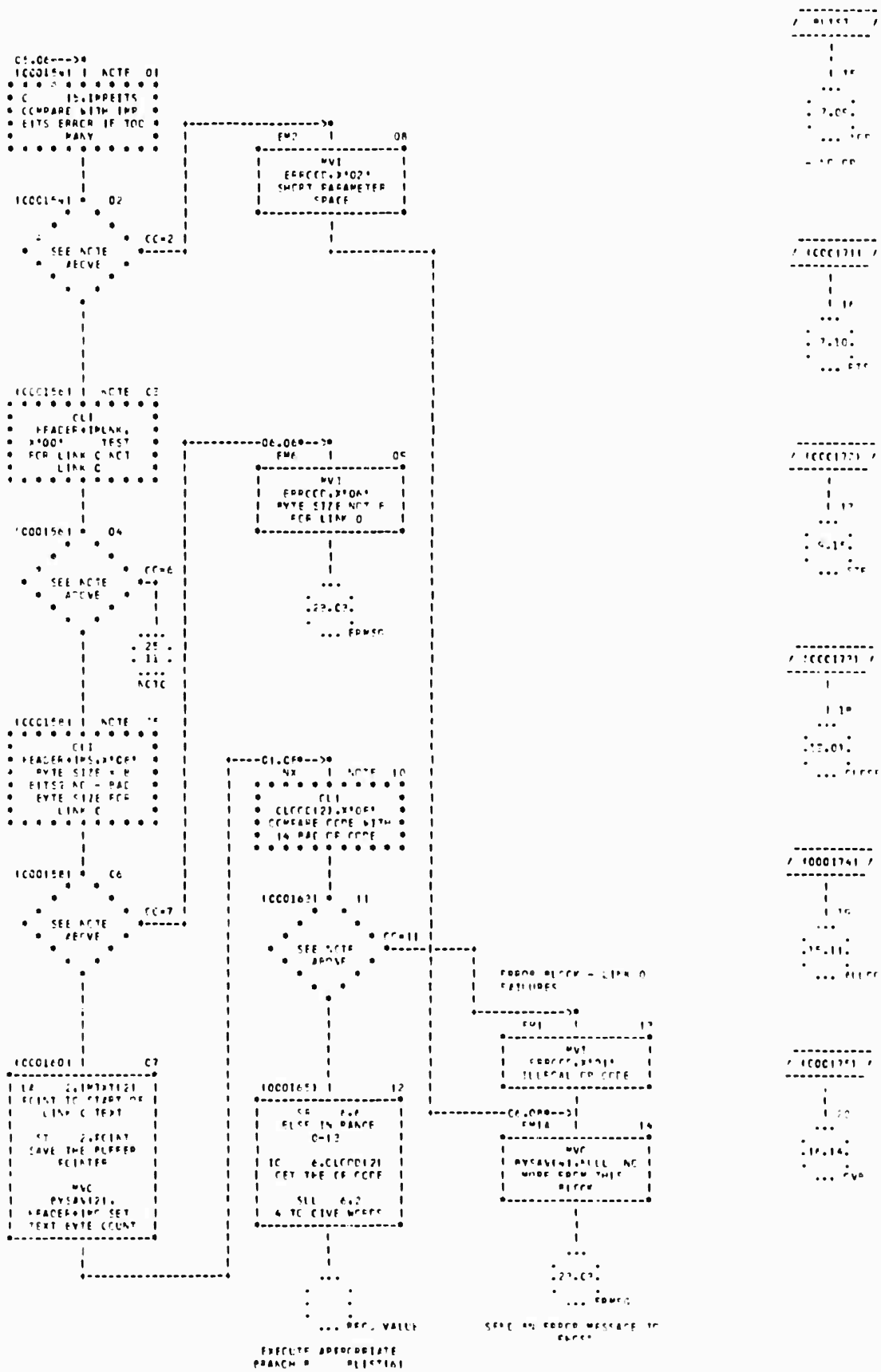

CHART TITLE - 'IMP INPUT INTERFACE'

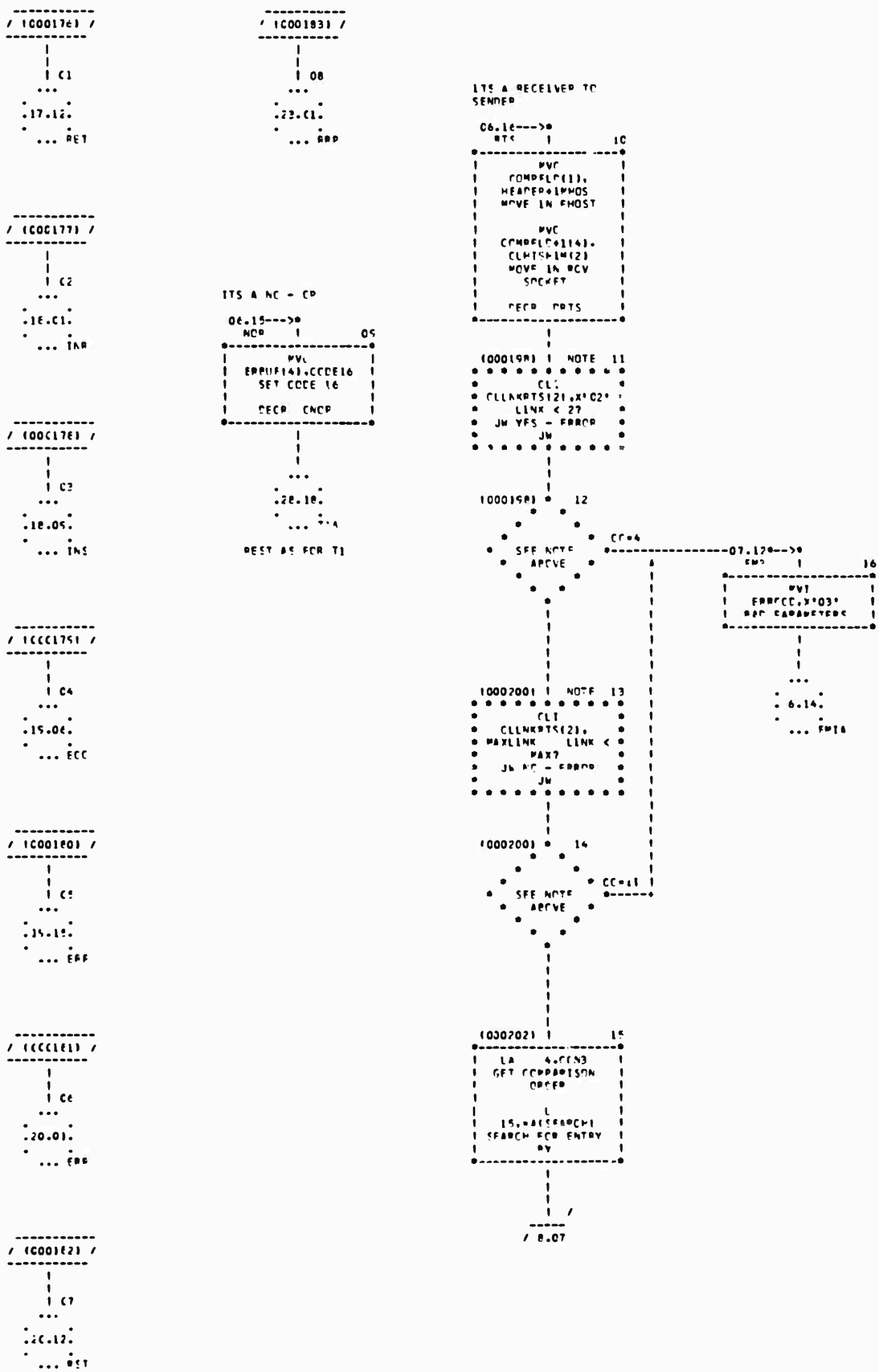

CHART TITLE - 'IMF INPUT INTERFACE'

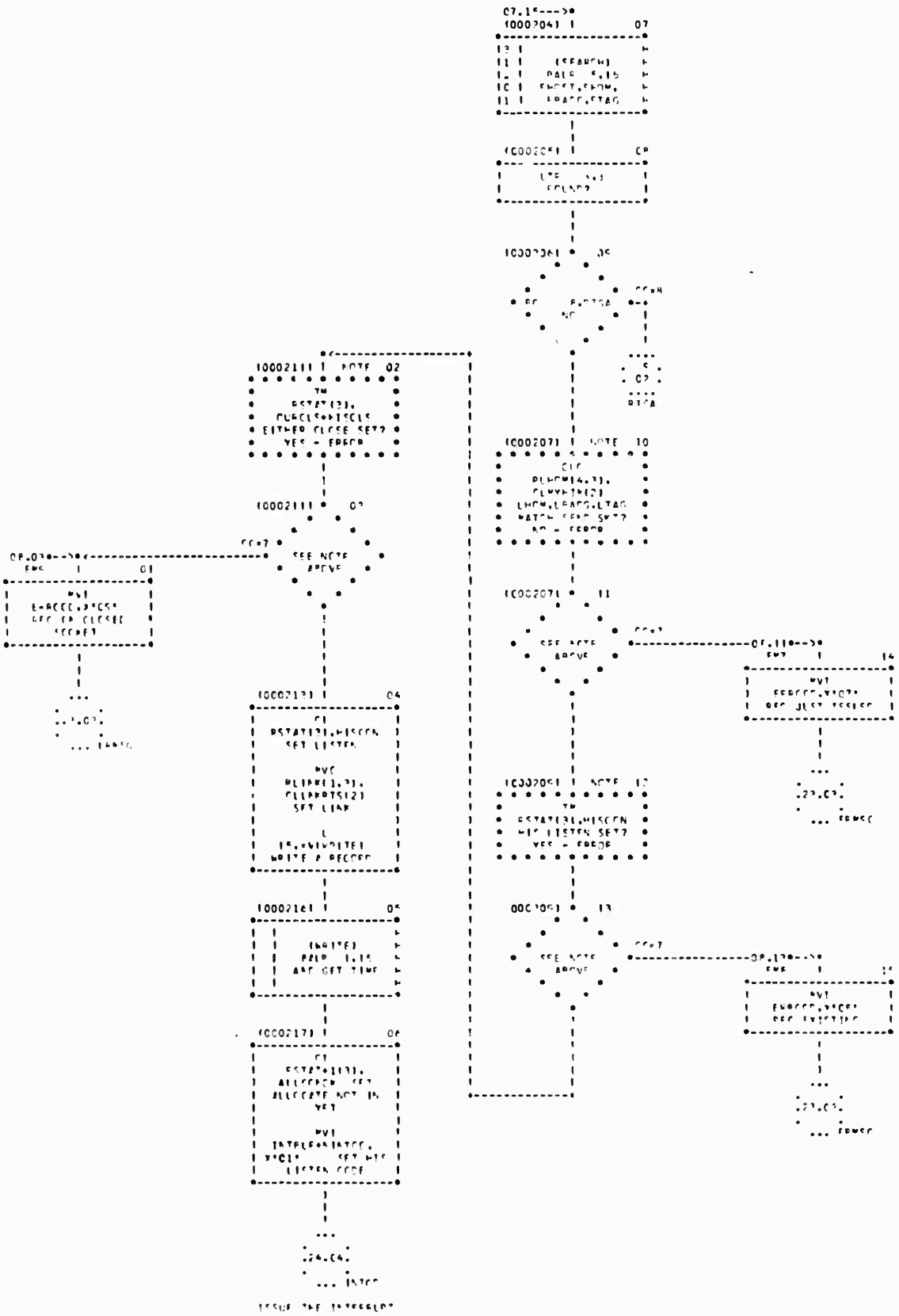

CHART TITLE - 'IMP IMPLT INTERFACE'

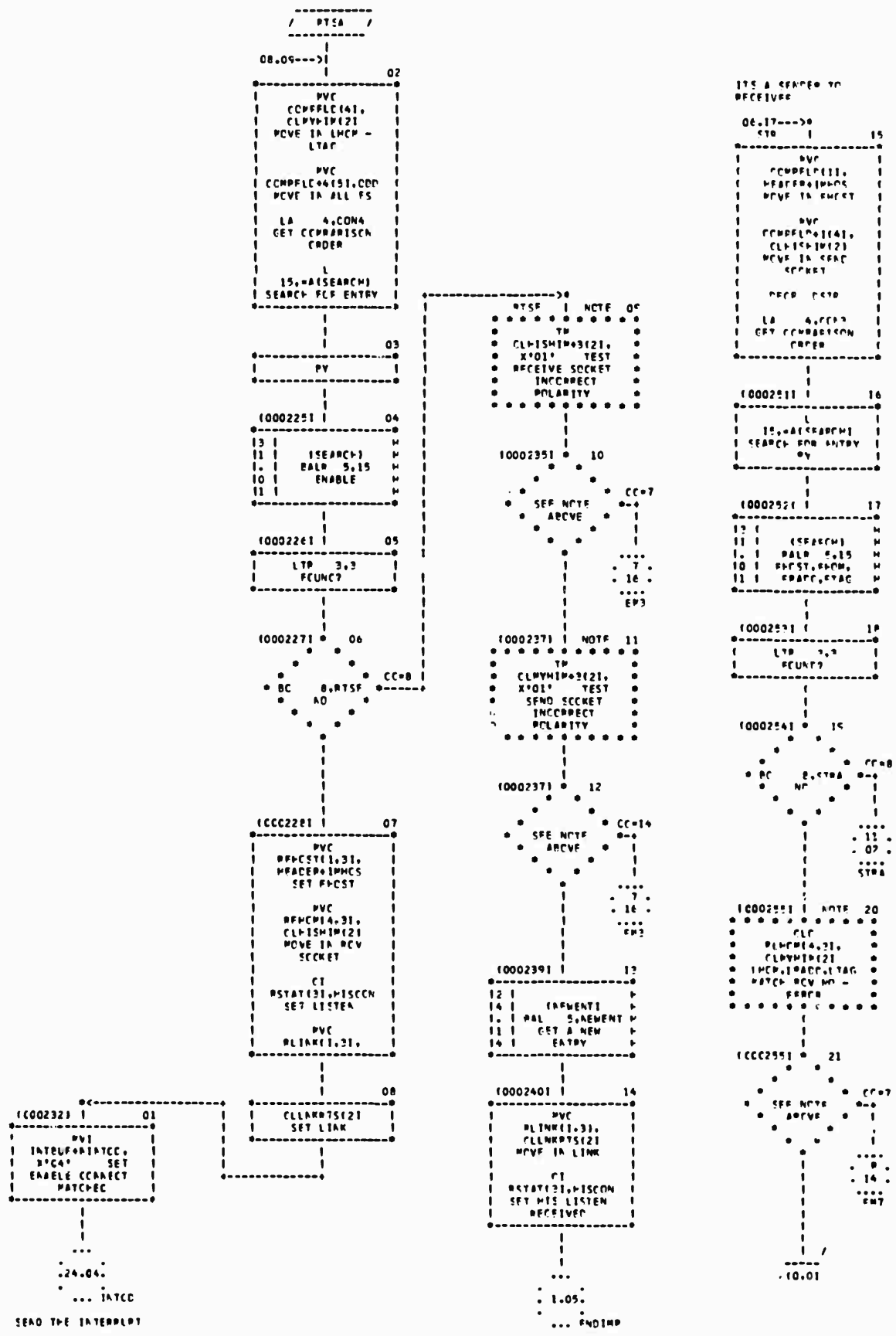

CHART TITLE - 'IMP INPUT INTERFACE'

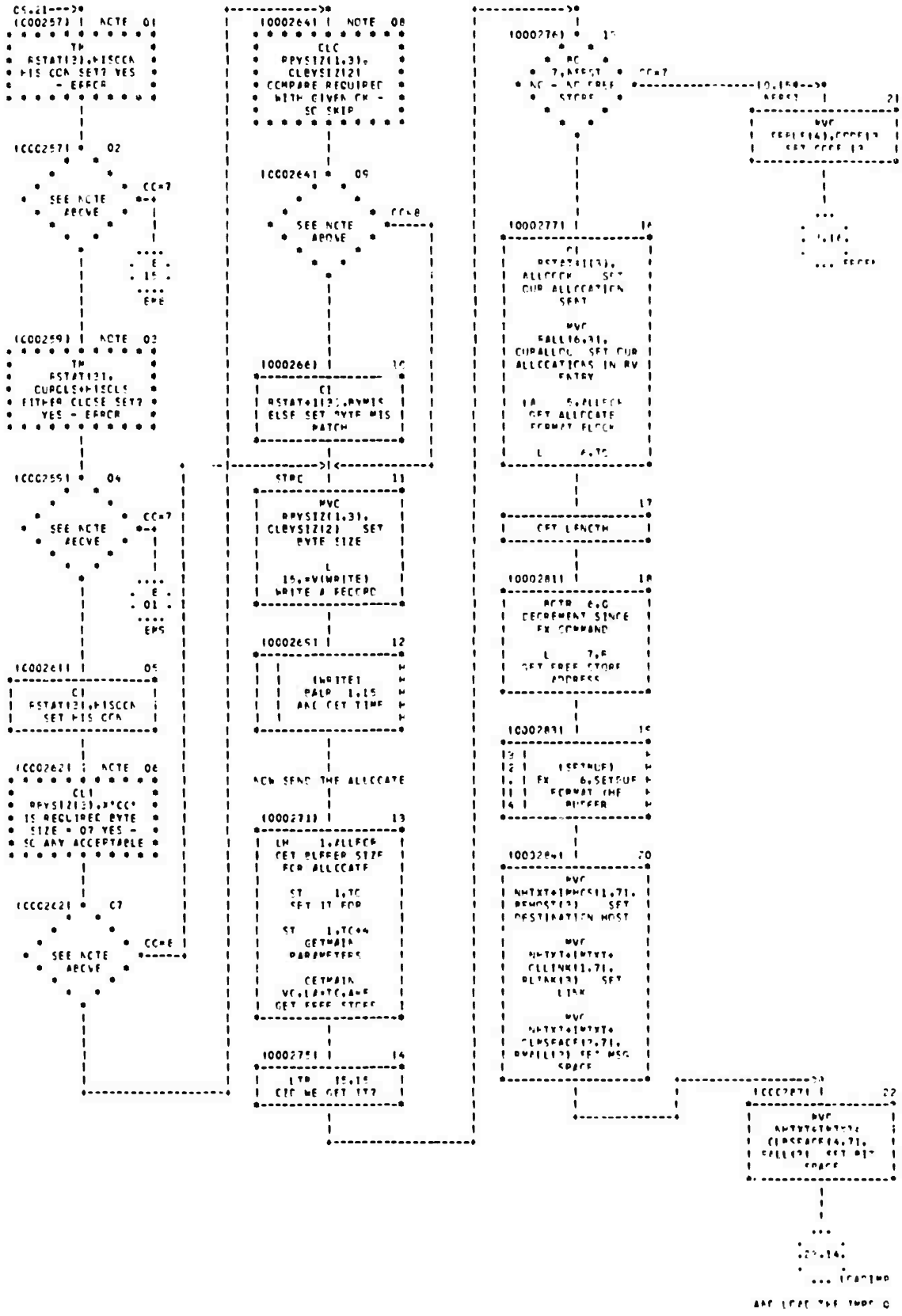

CHART TITLE - 'IMP INPUT INTERFACE'

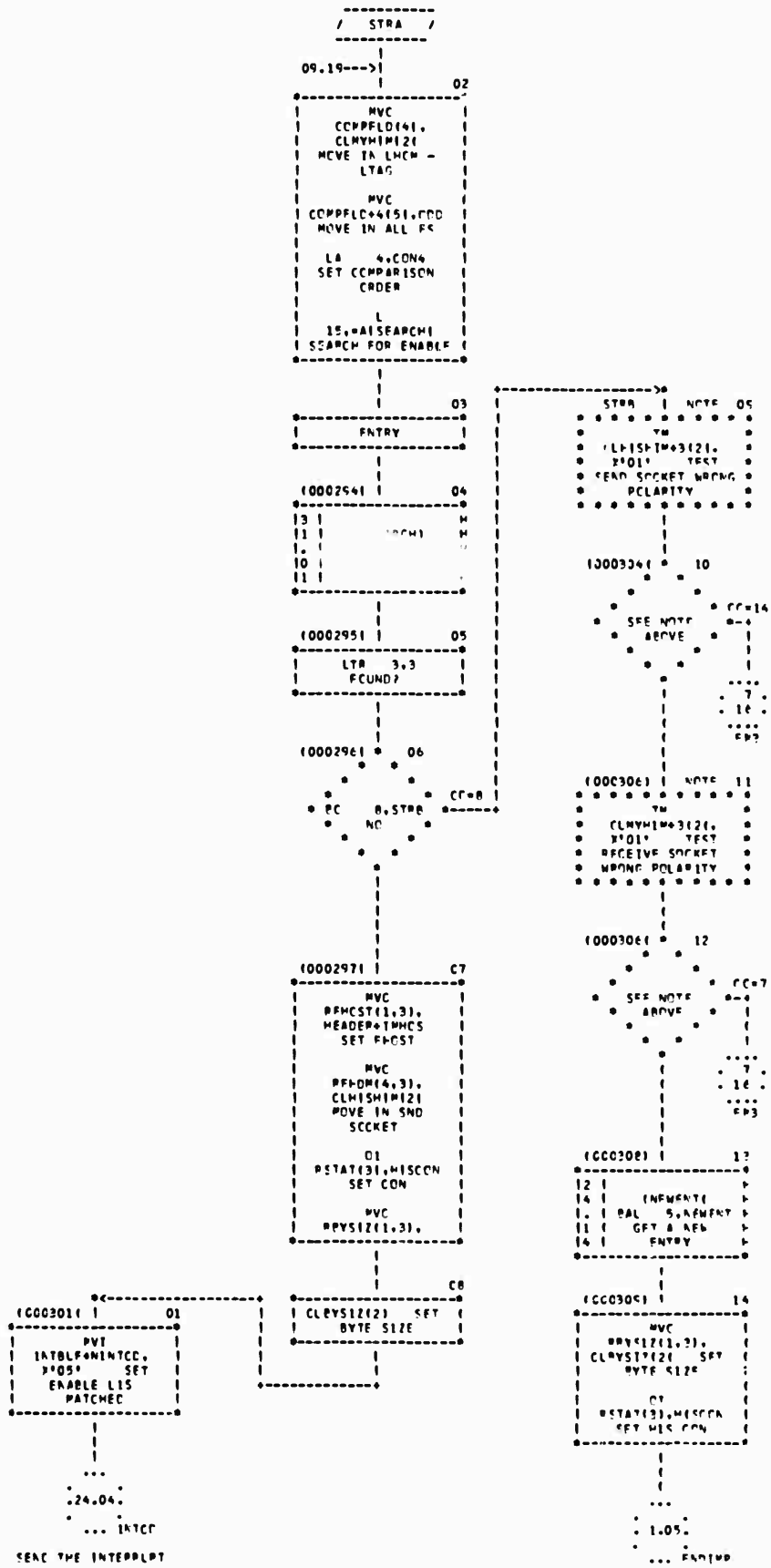

CHART TITLE - 'IPF INPUT INTERFACE'

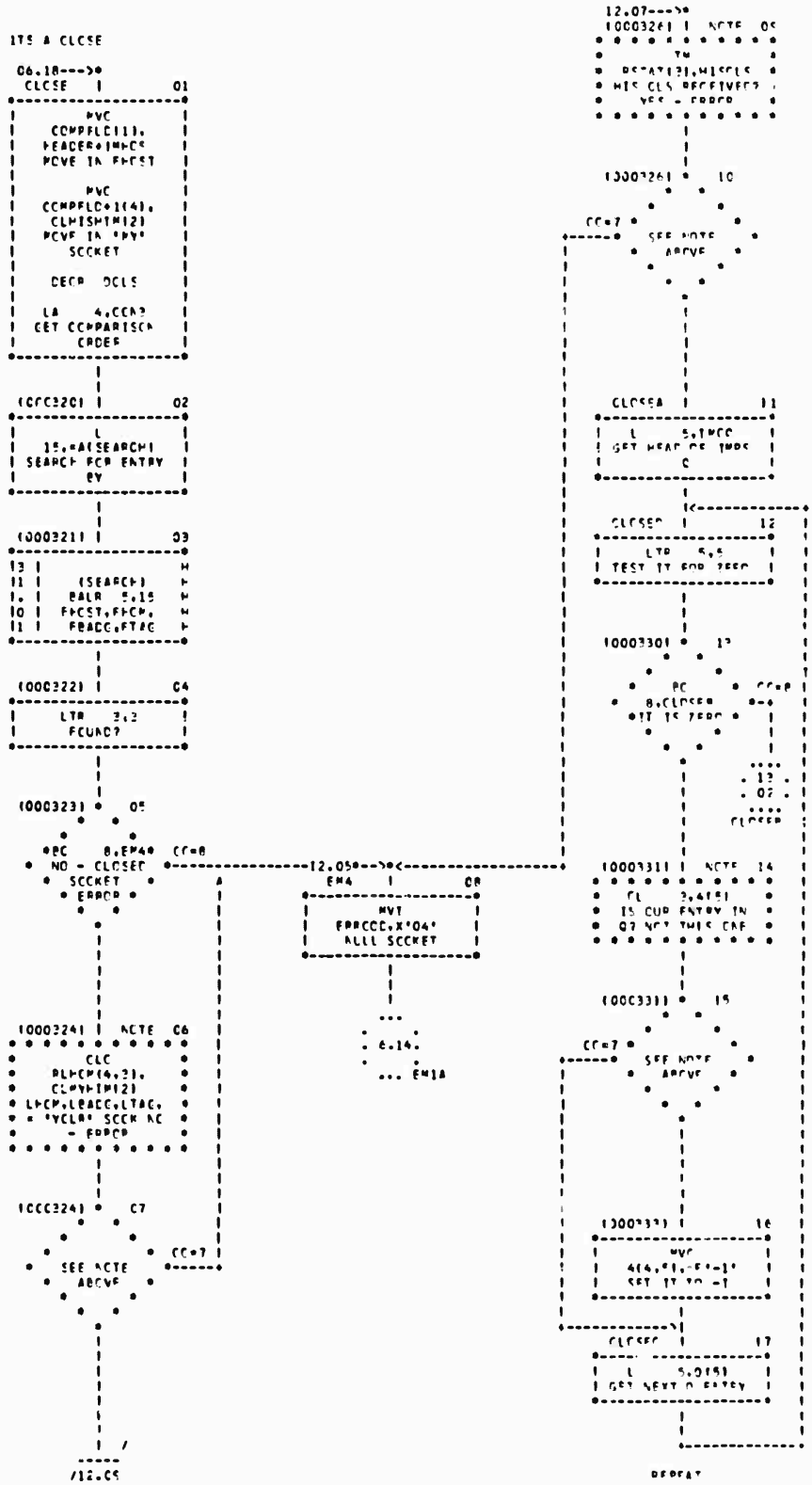

CHART TITLE - 'IPP INPUT INTERFACE'

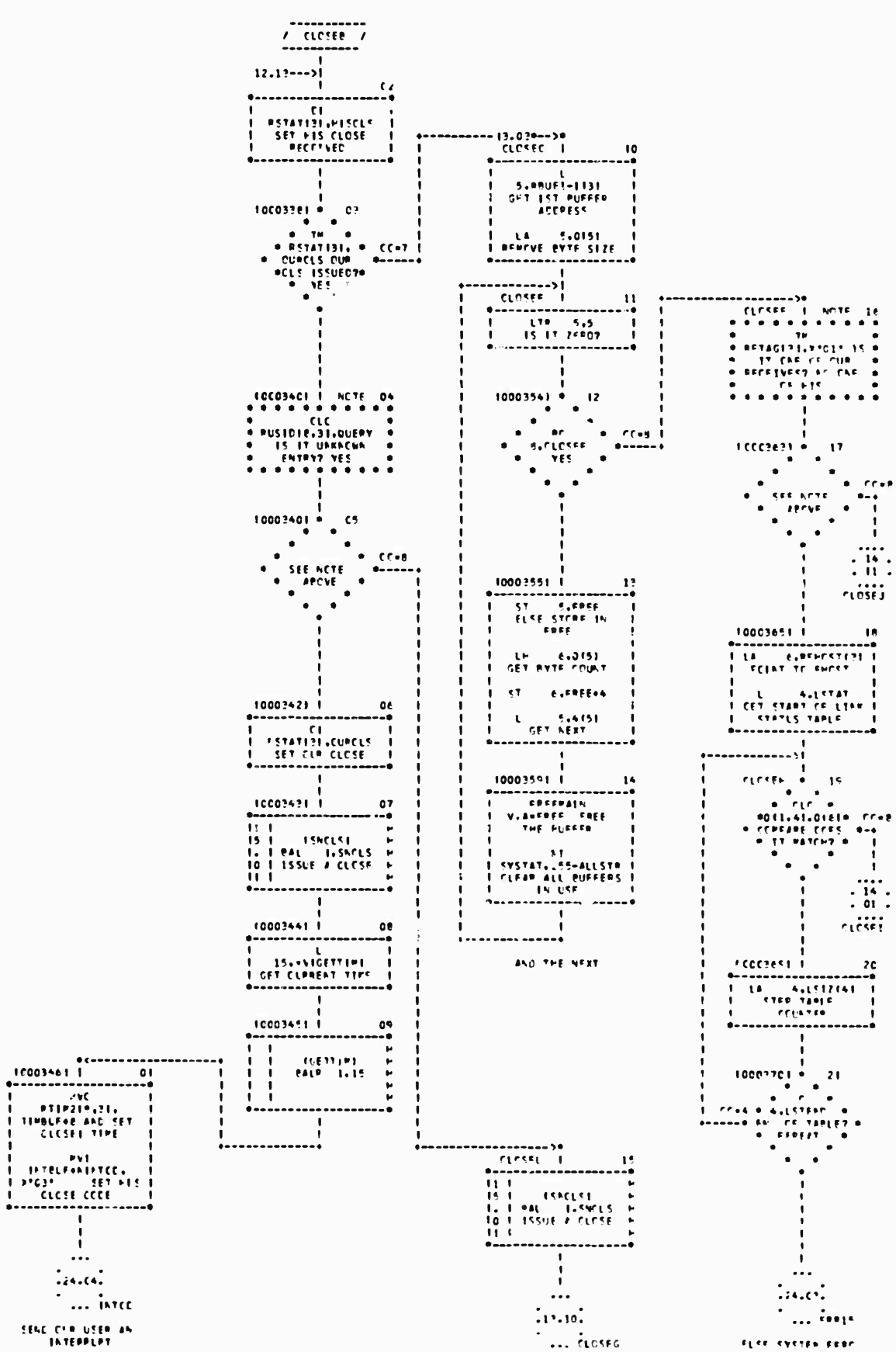

CHART TITLE - 'IMP INPUT INTERFACE'

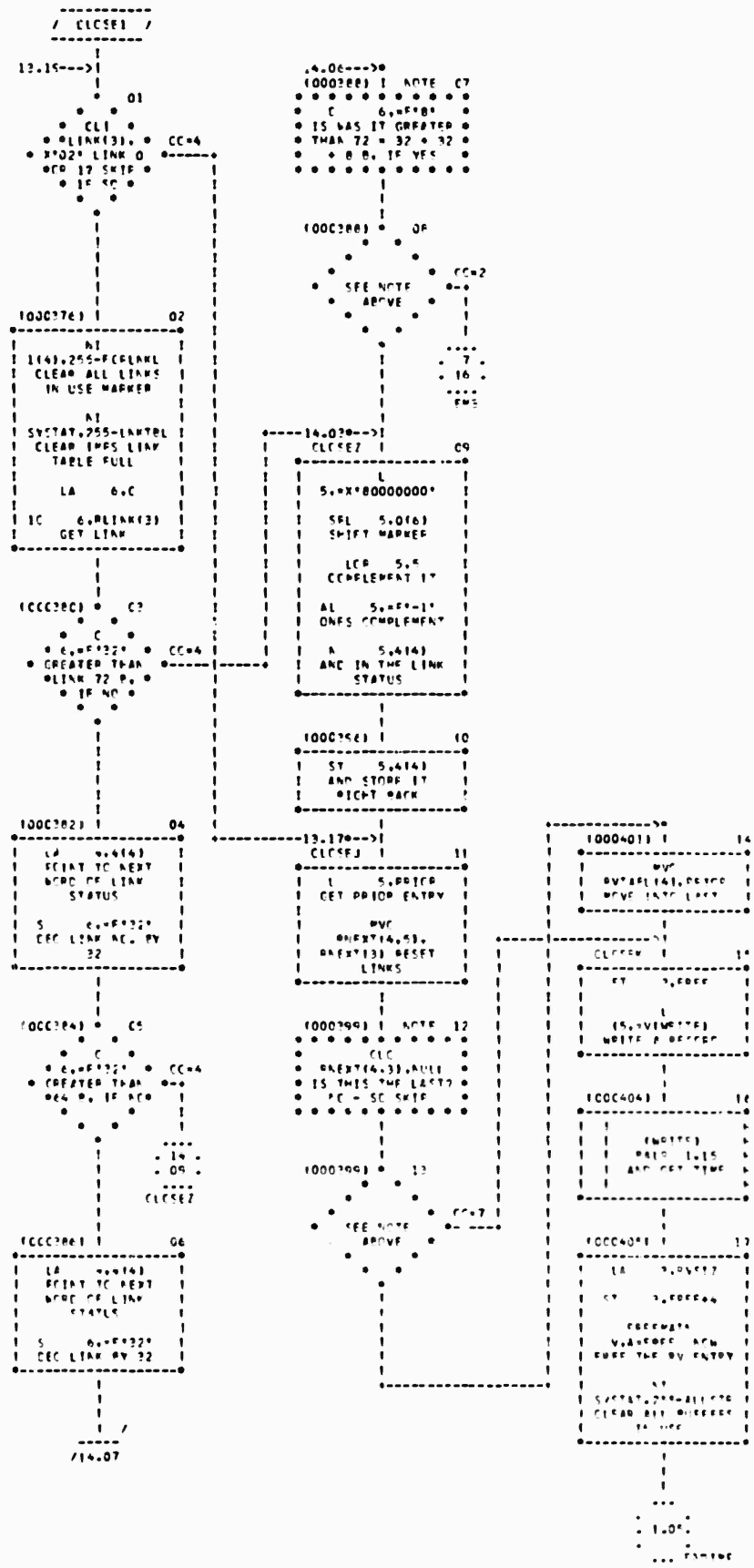

CHART TITLE - 'IMP INPUT INTERFACE'

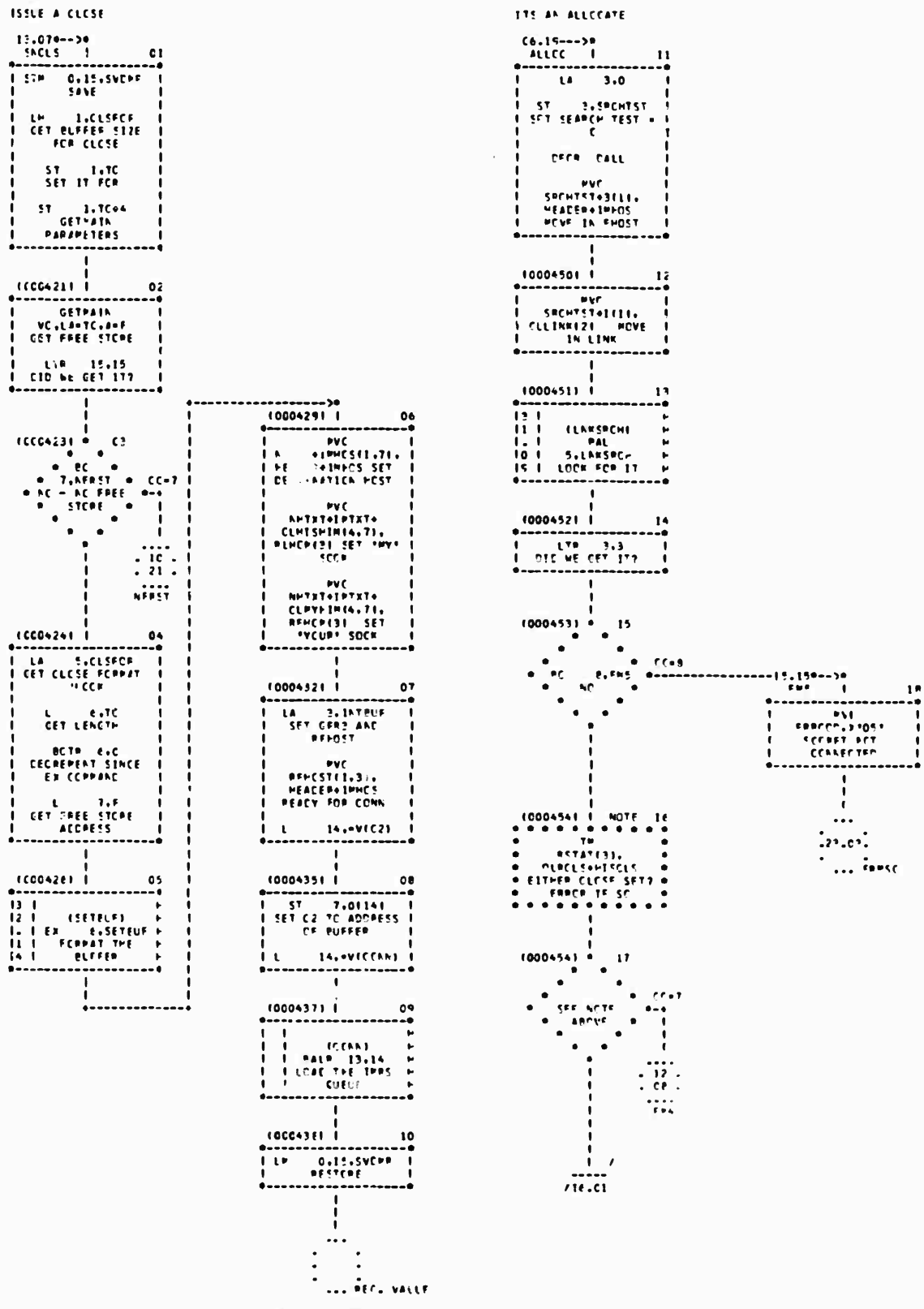

CHART TITLE - *IMP INPUT INTERFACE*

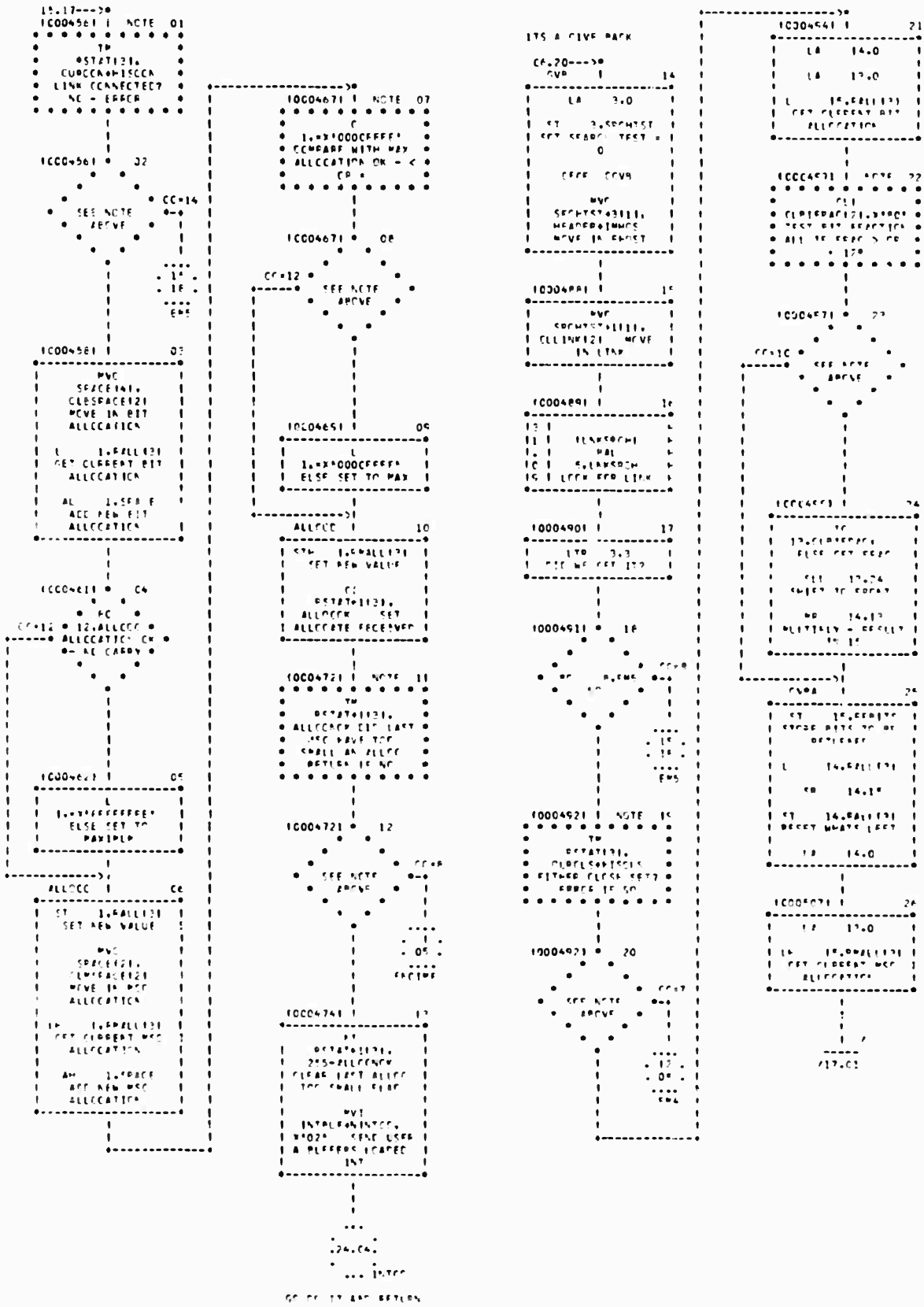

CHART TITLE - 'IMP INPUT INTERFACE'

```
 16.26--->*
 (CCC509) |  NOTE  01
* * * * * * * * * *
*        CL1       *
* CLMSFRAC(2),X'80' *
* TEST MSG FRAC ALL *
*  IF FRAC > CR =   *
*       128         *
* * * * * * * * * *
          |
          |
          |
 (CCC509) *   02
        *   *
      *       *
 CC=1C *       *
 ---*   SEE NOTE   *
|     *   ABOVE    *
|       *       *
|         *   *
|           *
|           |
|           |
|           |
```

CHART TITLE - IPP INPUT INTERFACE*

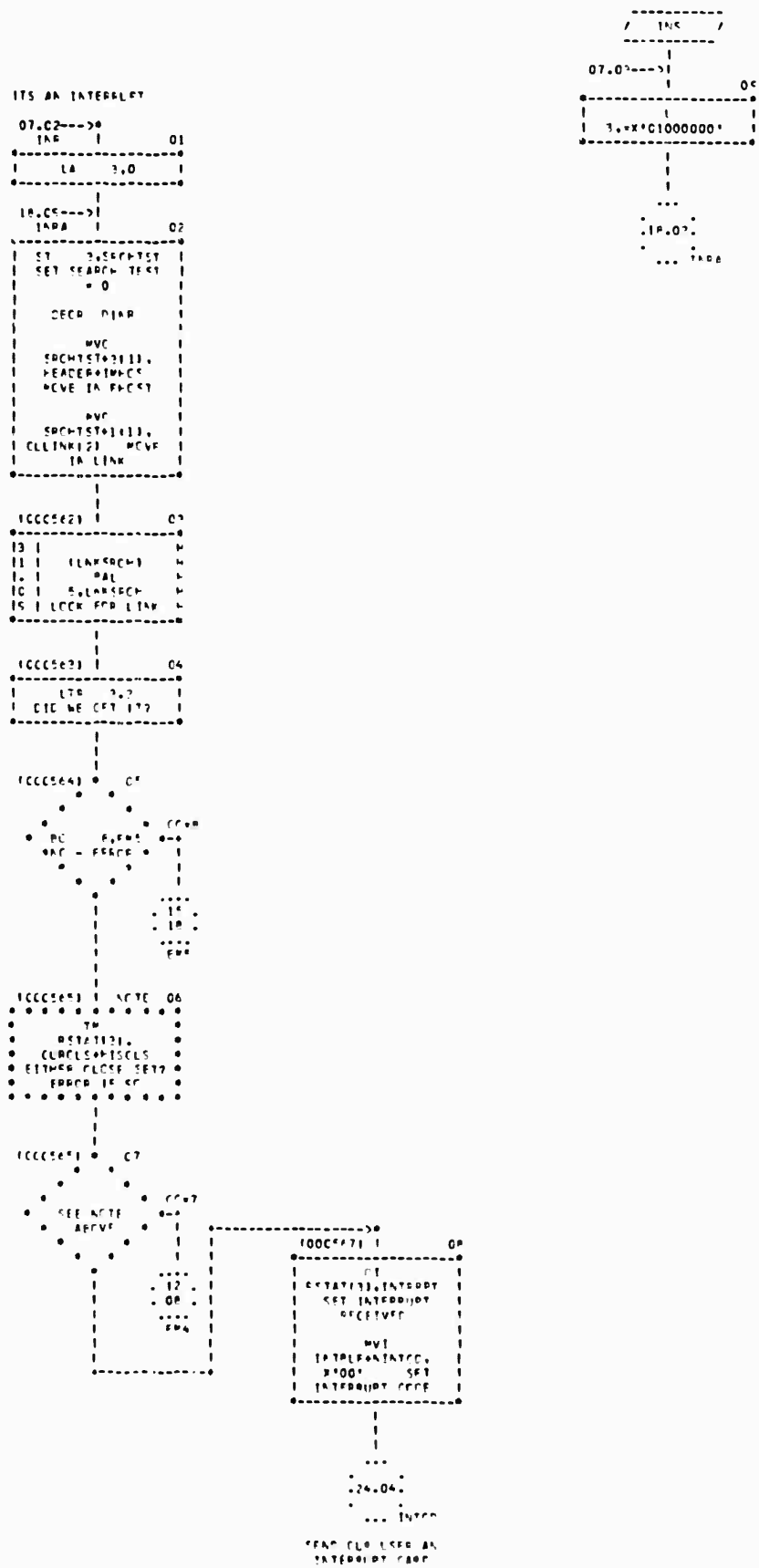

CHART TITLE - 'IPF INPUT INTERFACE'

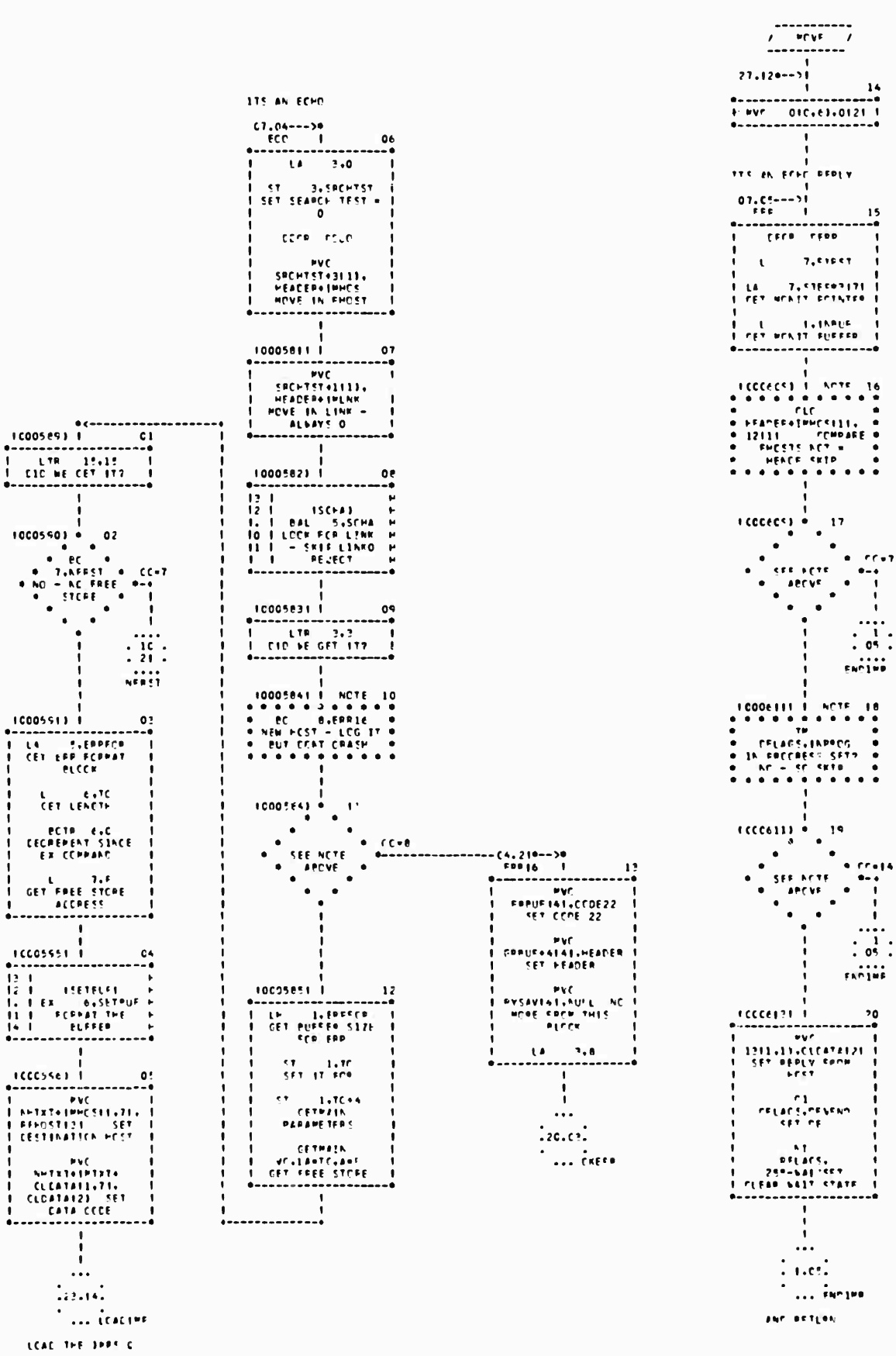

CHART TITLE - 'IMP INPUT INTERFACE'

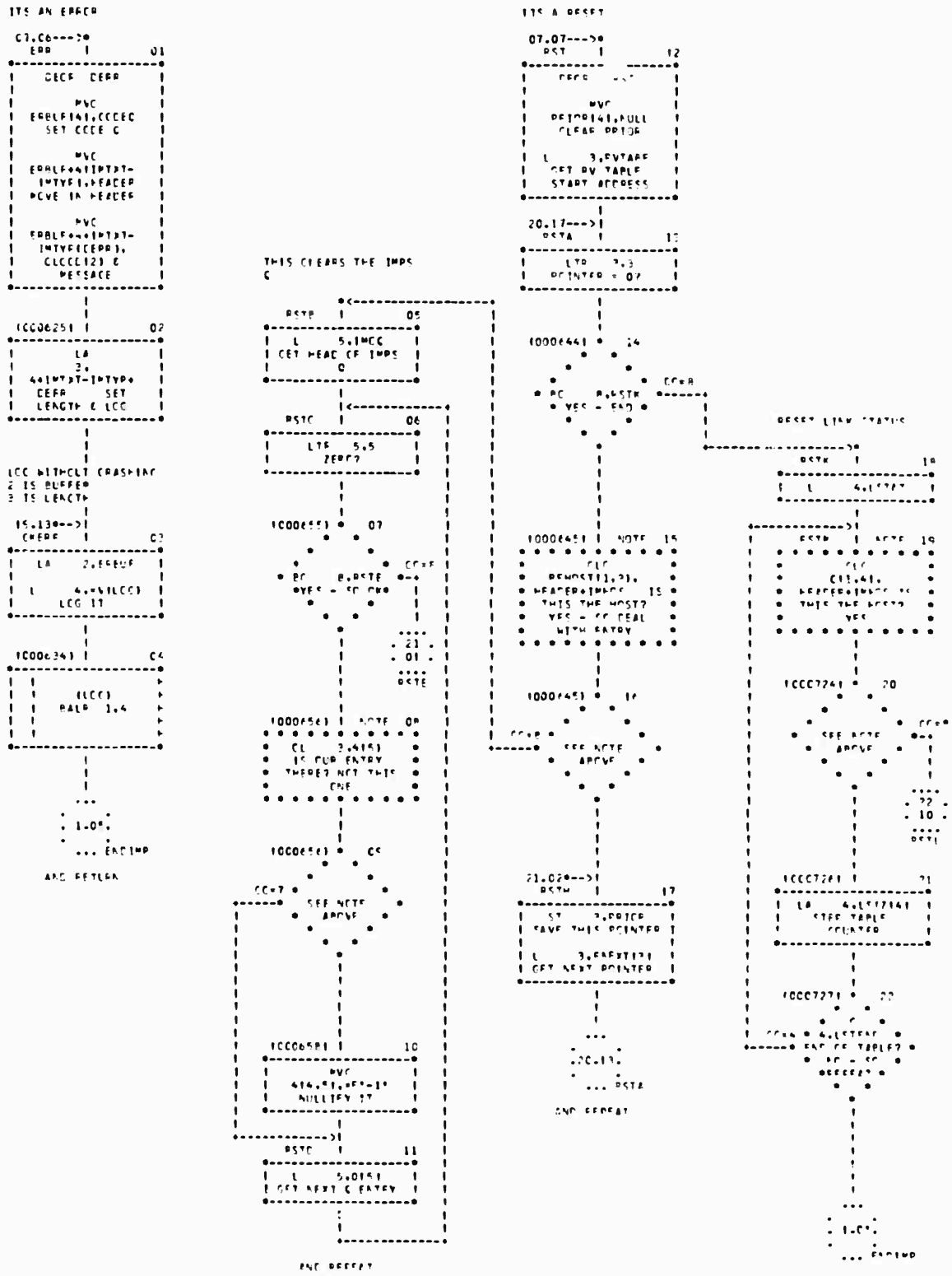

CHART TITLE - 'IMP INPUT INTERFACE'

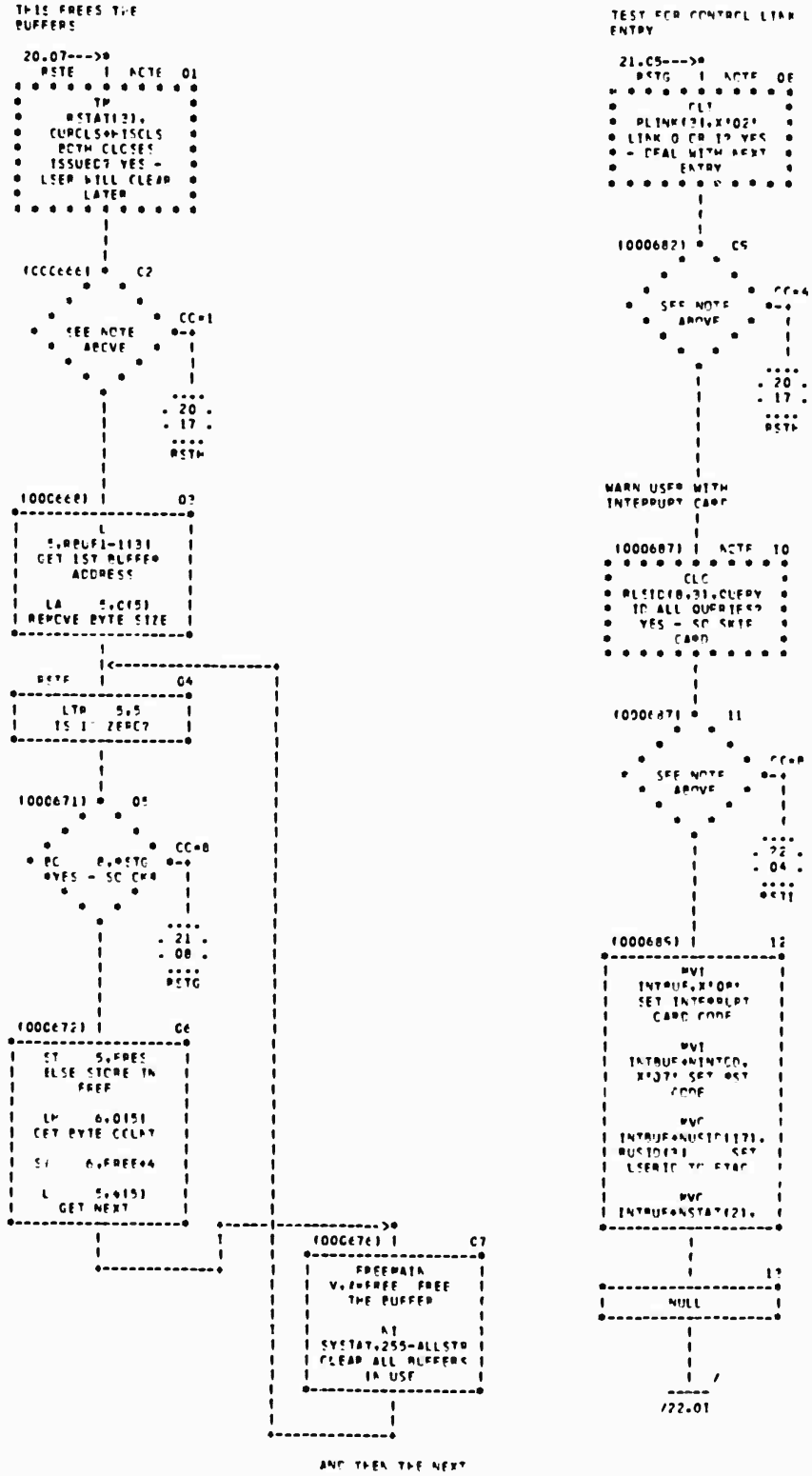

CHART TITLE - 'IPF INPUT INTERFACE'

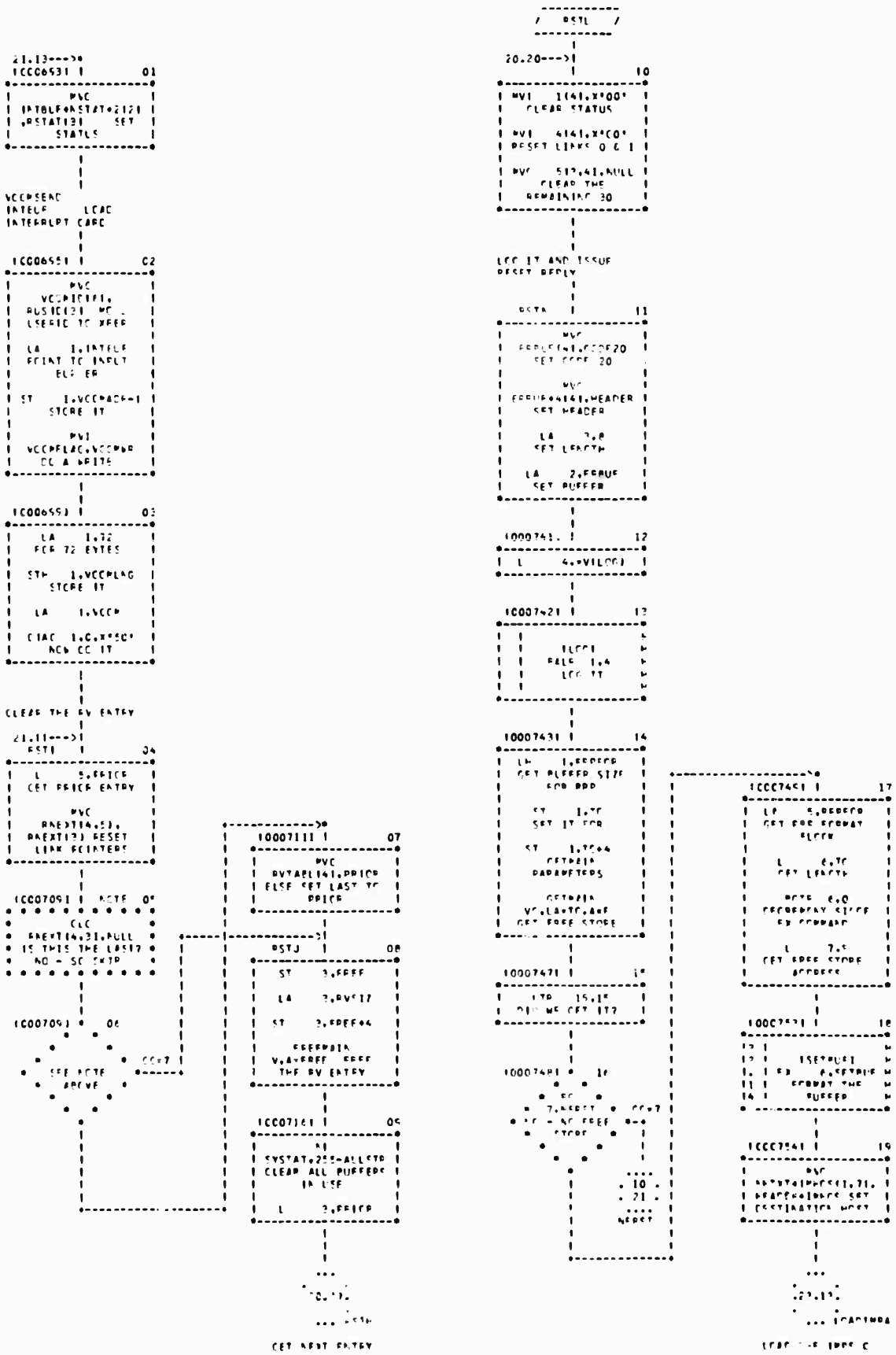

CHART TITLE - 'IMP INPUT INTERFACE'

```
ITS A RESET REPLY

 07.08--->*
   RRP    |          01
*--------------------*
|    DECR  CRRP      |
|                    |
|        PVC         |
|  ERBUF(4),CCCE5    |
|    SET CCCE 5      |
|                    |
|        PVC         |
| ERBUF+4(4),HEADER  |
|    SET HEADER      |
|                    |
|     LA    3,8      |
|    SET LENGTH      |
*--------------------*
          |
          |
          |
         ...
        .   .
        .2C.C2.
        .   .
         ... CHERR

LCC IT AND RETURN TC IMP


      -----------
     /   EPIC   /
      -----------
          |
 25.22*-->|
          |          02
*--------------------*
|        PVI         |
|  ERRCCC,H'CA'      |
| ALLOCATION TCC     |
|       SPALL        |
*--------------------*
          |
          |
          *--------------*

SEND AN ERROR  ESSAGE
TC HIS NCP

 06.09*-->*
   ERMSG   |          03
*--------------------*
|  LH    1,ERRFCR    |
|  GET BUFFER SIZE   |
|     FCR ERRCR      |
|     MESSAGES       |
|                    |
|    ST    1,TC      |
|    SET IT FCR      |
|                    |
|    ST    1,TC+4    |
|      CETMAIN       |
|    PARAMETERS      |
|                    |
|      CETMAIN       |
|   VC,LA=TC,A=F     |
|  GET FREE STORE    |
*--------------------*
          |
          |
 (0C0756) |          04
*--------------------*
|    LTR   15,15     |
|  CID WE GET ITP    |
*--------------------*
          |
          |
          |
 (0C0755) *   05
          *   *
        *  PC   *
      *  7,AFRST  *  CC=7
    * AC - AC FREE  *--*
      *   STORE   *    |
        *       *      |
          *   *        |
            *        ....
              |      . 10 .
              |      . 21 .
              |       ....
              |      AFRST
              |
 (0C0800) |          06
*--------------------*
|  LA    5,ERRFCR    |
| GET ERRCR FCRMAT   |
|       PLCCK        |
|                    |
|    L     6,TC      |
|    GET LENGTH      |
|                    |
|    PCTR  6,0       |
|  DECREMENT SINCE   |
|    EX COMMAND      |
|                    |
|    L     7,F       |
|  GET FREE STORE    |
|     ACCRESS        |
*--------------------*
          |
          |
 (0C0804) |          07
*--------------------*
|3 |                 H
|2 |    (SETBUF)     H
|. | EX     6,SETBUF H
|1 |   FCRMAT THE    H
|4 |     BUFFER      H
*--------------------*
          |
          |
          *--------------*

*------------------>*
 (0008051 |          08
*--------------------*
|        PVC         |
| NHT?'(+IMMCS(1,71, |
| HEACER+IMMOS SET   |
|       FMCST        |
|                    |
|        PVC         |
|   NHTXT+IMTXT+     |
| CLERRCCP(1,71,     |
|  ERRCCC   SET      |
|   ERROR CODE       |
|                    |
|        PVC         |
|   NHTXT+IMTXT+     |
|  CLTEXT(10,71,     |
| CLCCD(2)   SET     |
| MESSAGE IN ERROR   |
*--------------------*
          |
          |
 (0008081 |          09
*--------------------*
|  STM   1,4,SAV14   |
|    SAVE 1 - 4      |
|                    |
|        PVC         |
|  ERBUF(4),CODE19   |
|    SET CCCE 19     |
|                    |
|        PVC         |
| ERBUF+4)IMTXT-     |
|  IMTYP(,HEADER     |
| RCVF IN HEADER     |
*--------------------*
          |
          |
 (0008?1) |          10
*--------------------*
|        PVC         |
| ERBUF+4+IMTXT-     |
|  IMTYP(DERR),      |
| NHTXT+IMTXT(7)     |
|                    |
|        LA          |
|        3,          |
| 4+IMTXT-IMTYP+     |
|  DERR      SET     |
|  LENGTH E LCG      |
|                    |
|   LA     2,ERBUF   |
|                    |
|  L      4,=VILOG)  |
|      LLC IT        |
*--------------------*
          |
          |
 (0008?51 |          11
*--------------------*
|  |                 H
|  |  (REG. VALUE)   H
|  |   BALR  1,4     H
|  |                 H
|  |                 H
*--------------------*
          |
          |
 (0008?6) |          12
*--------------------*
|  LM    1,4,SAV14   |
|   RESTORE 1 - 4    |
*--------------------*
          |
          |
          |
ARTIFICIAL HEADER FCR
LINK C
          |
 22.19--->|
 LCAD1MPA |          13
*--------------------*
|  LA    3,INTBUF    |
|   SET CFR3 AND     |
|                    |
|        PVC         |
|  RFMCST(1),3),     |
|   HEADER+IMMOS     |
| RFMCST READY FCR   |
|       CCAN         |
*--------------------*
          |
          |
          *--------------*

*------------------>*
          |
     LCAC THE IMPS O
     3 PLST RCTAT TC
     LCCATICN CCNTAINING
     FMCST, RFMCST PYTES
     TN
     7 PUST CCNTAIN FREE
     STCRE ARRRESS
          |
 1C.22*-->|
 LCAC1PE  |          14
*--------------------*
|  L     14,=V(C2)   |
*--------------------*
          |
          |
 (0008?5) |          15
*--------------------*
|    ST     7,C(14)  |
| SET C2 TC ARCRESS  |
|     CF BUFFER      |
|                    |
| L      14,=VICCAN) |
*--------------------*
          |
          |
 (CCCP?1) |          16
*--------------------*
|  |                 H
|  |     (CCAN)      H
|  |  BALR  13,14    H
|  | LCAC THE IMPS   H
|  |       C         H
*--------------------*
          |
          |
          |
         ...
        .   .
        . 1.09.
        .   .
         ... ENCIMP
```

CHART TITLE - 'IMPF INPLT INTERFACE'

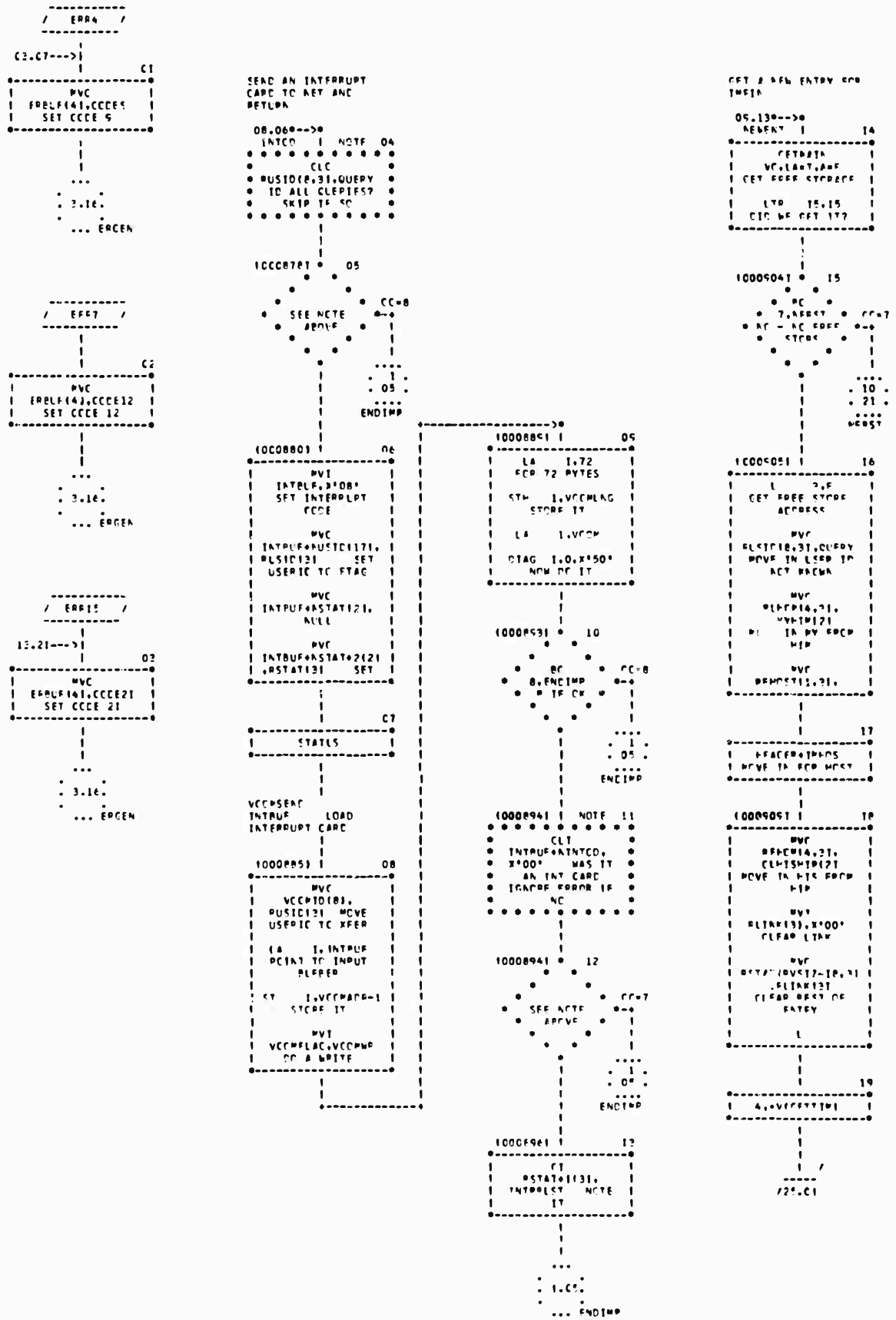

CHART TITLE - 'IMF INPUT INTERFACE'

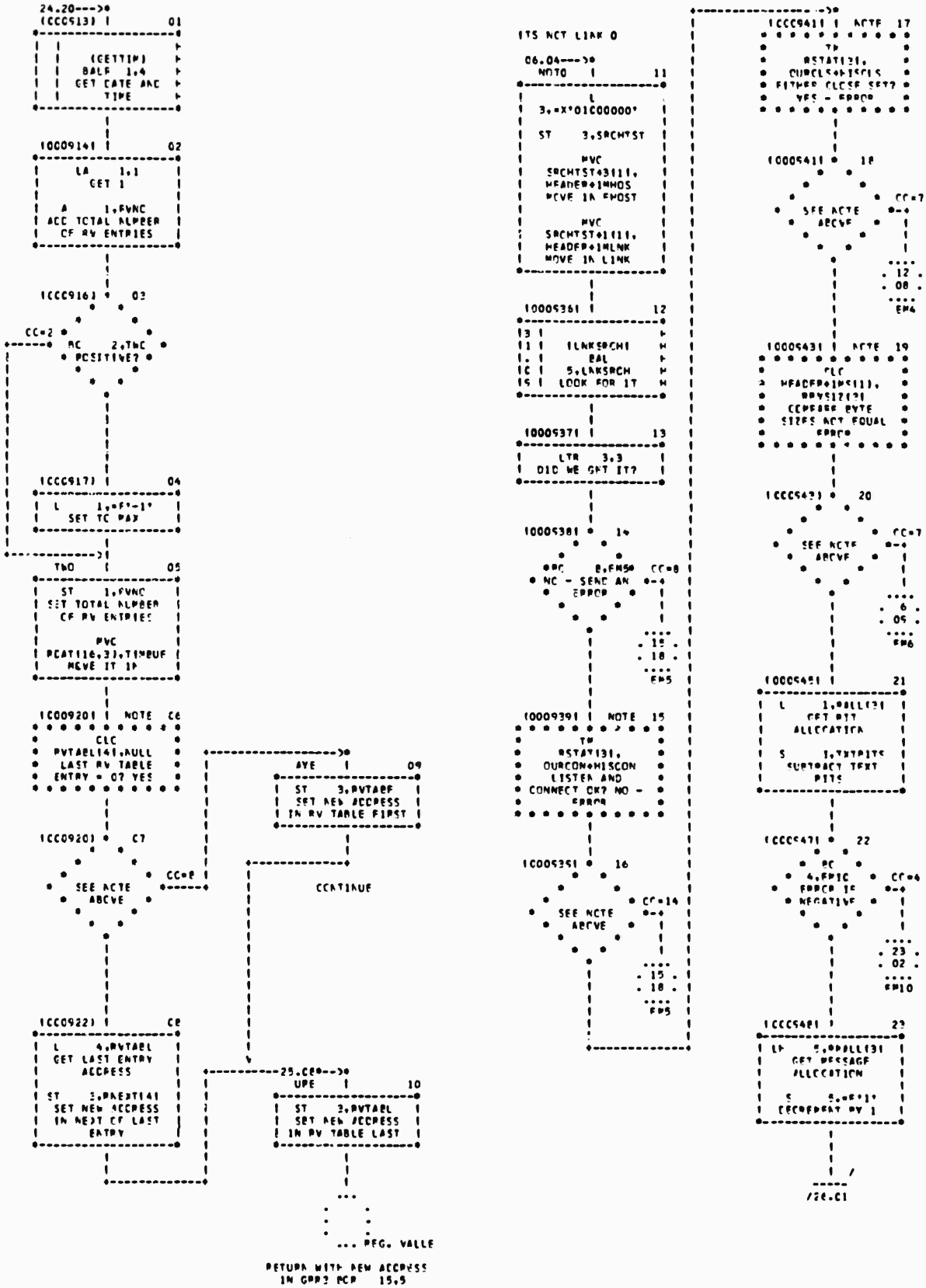

CHART TITLE - 'IMP INPUT INTERFACE'

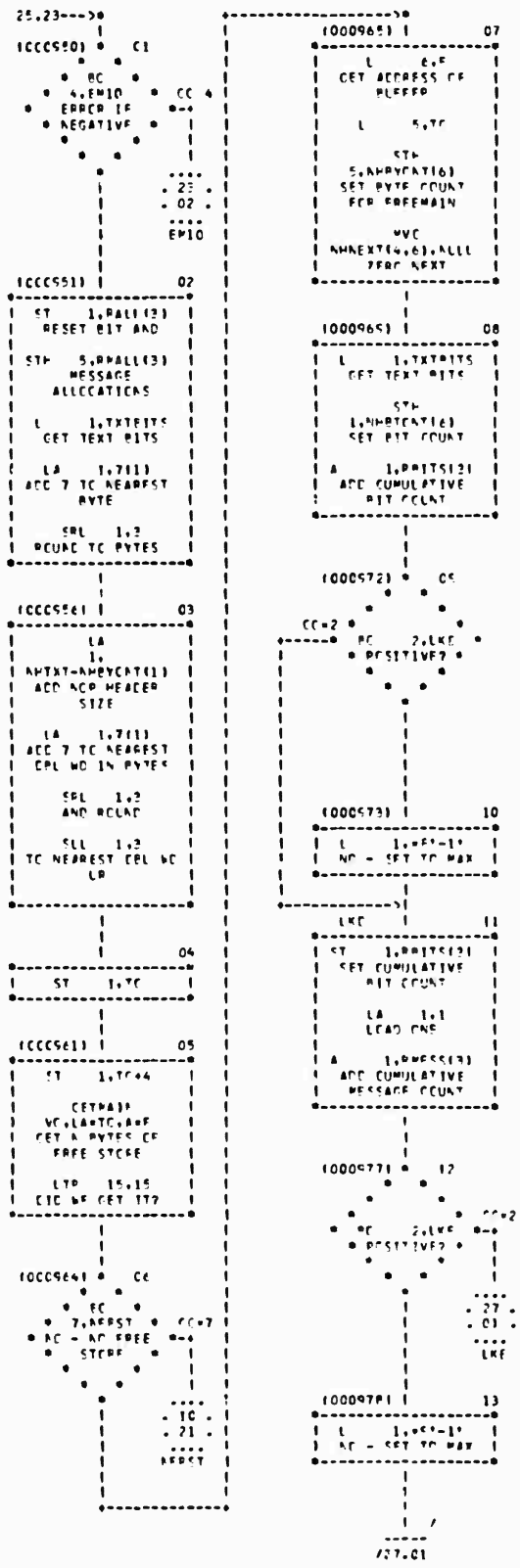

CHART TITLE - 'IPF INPUT INTERFACE'

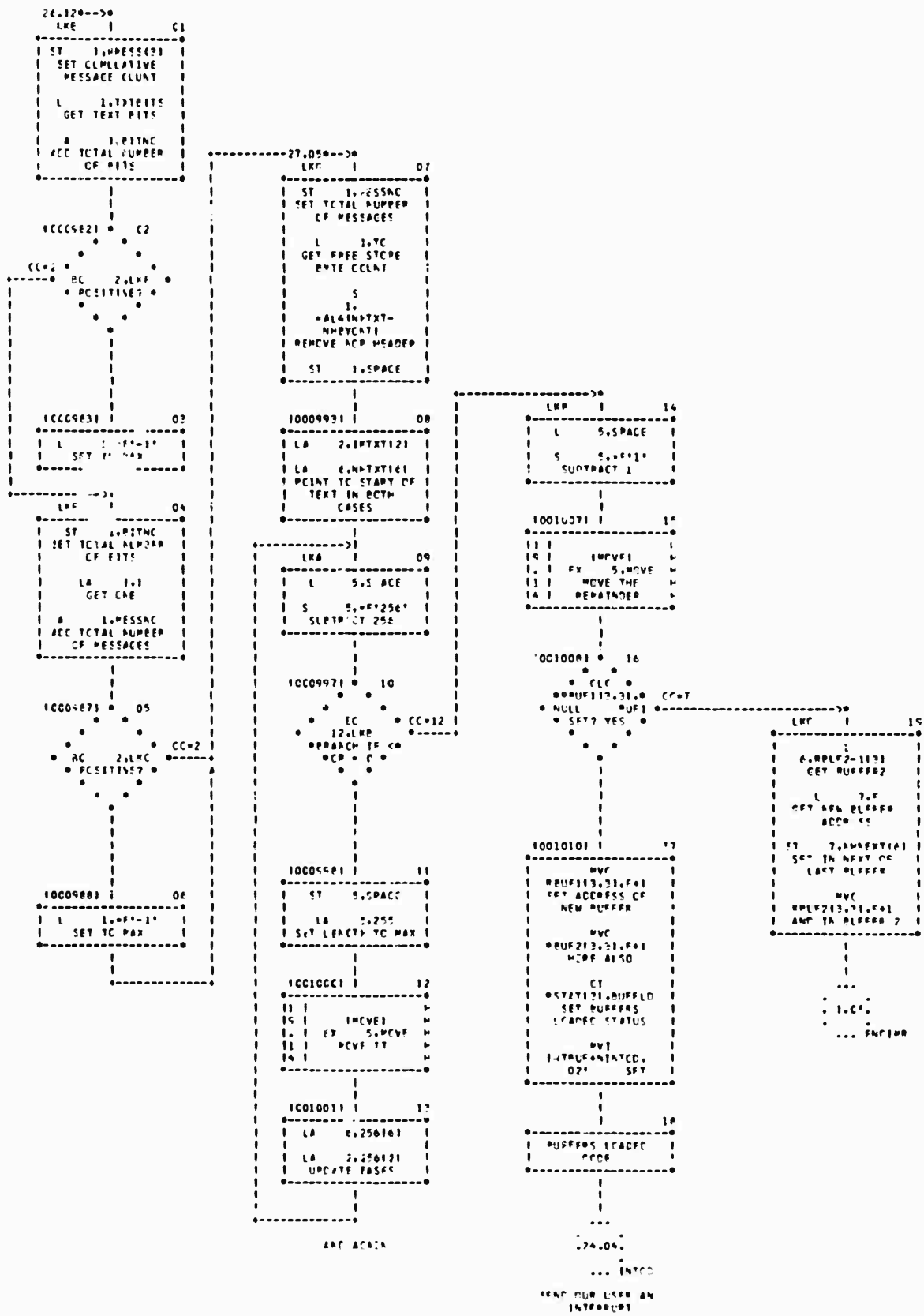

CHART TITLE - 'IMP INPUT INTERFACE'

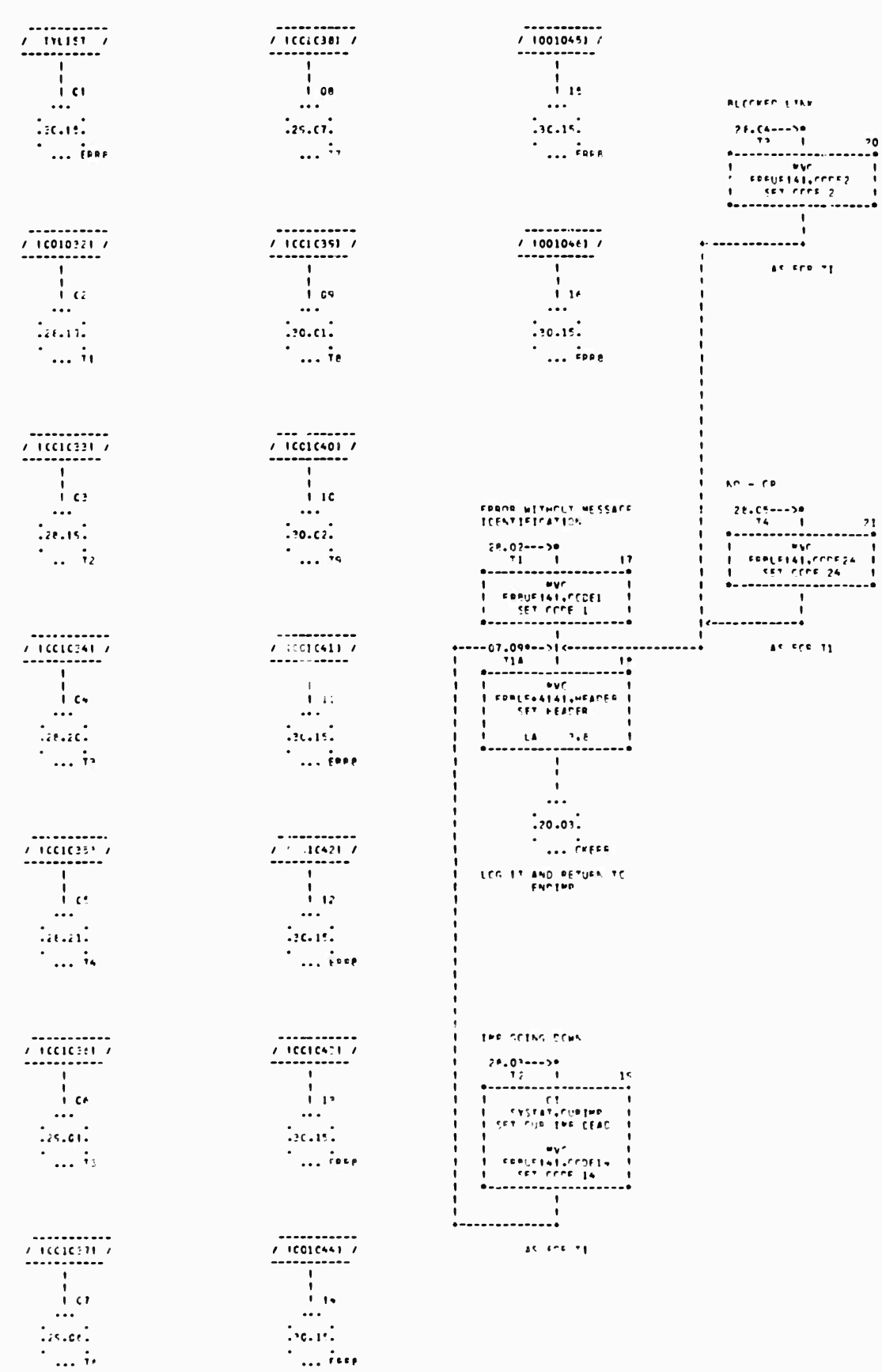

CHART TITLE - 'IPP INPUT INTERFACE'

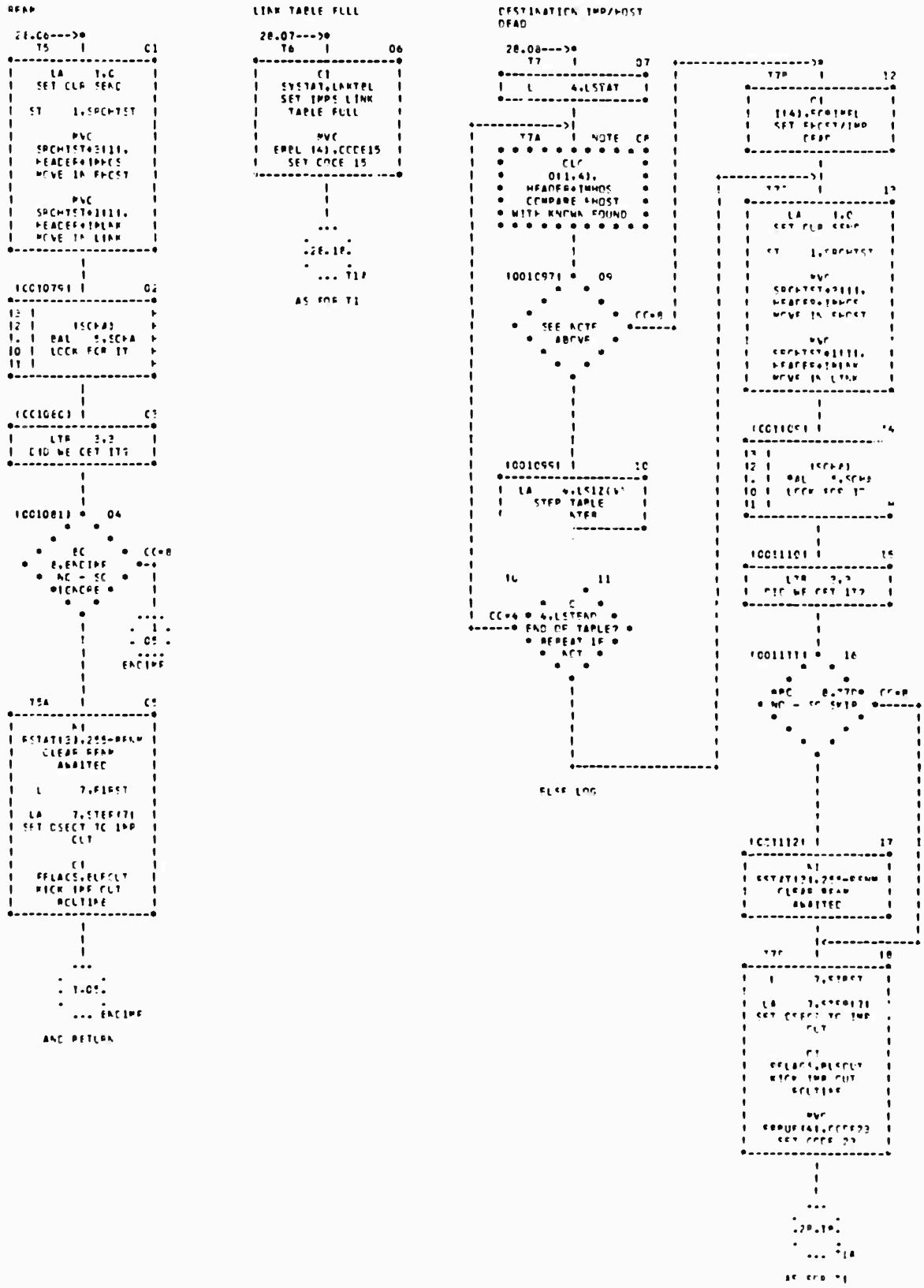

CHA TLE - 'TPF INPL. INTERFACE'

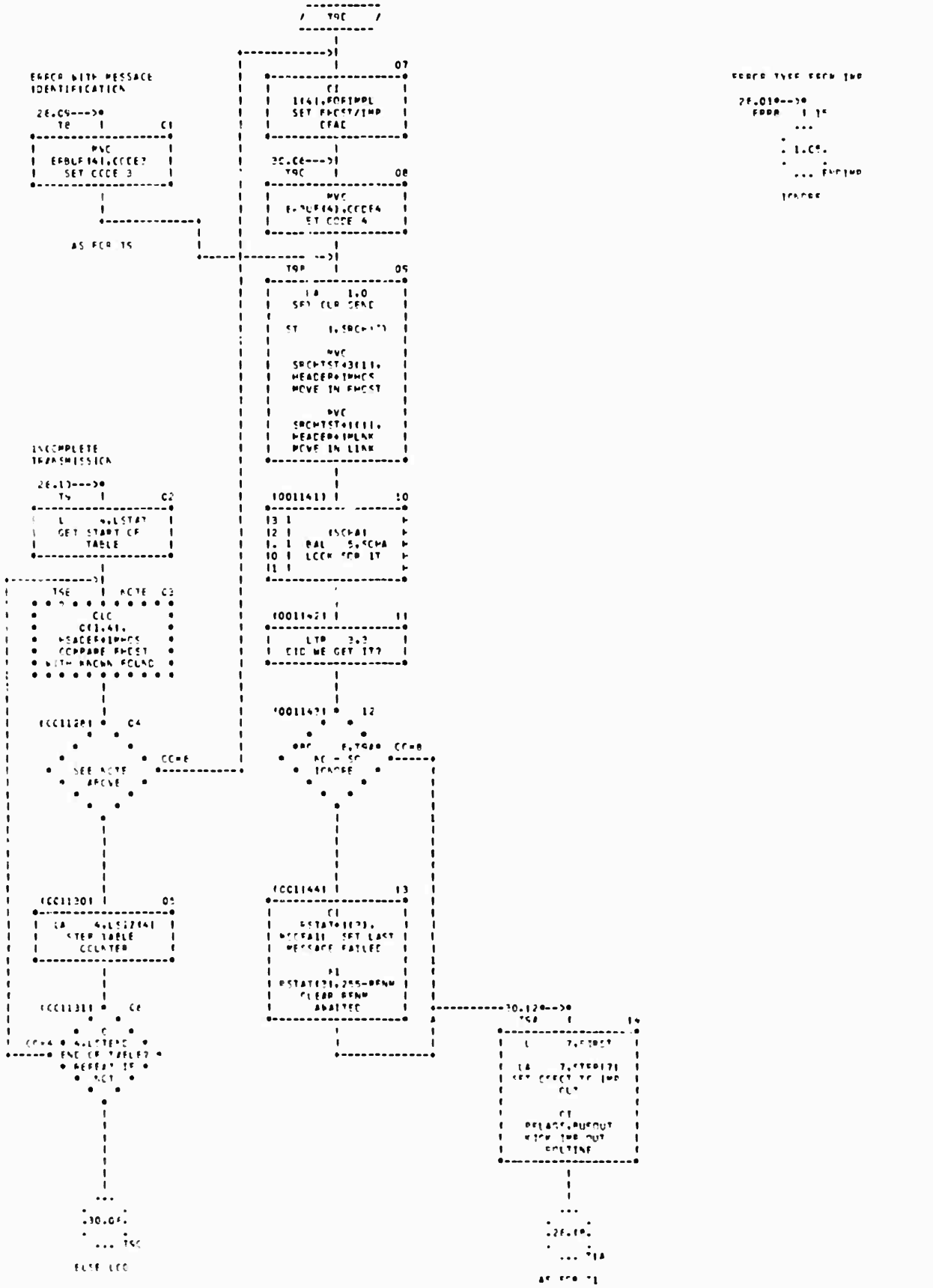

CHART TITLE - 'THE INPUT INTERFACE'

```
**********************
**********************
**********************
******
SEARCH ROUTINE
SEARCHES THE
RENDEZVOUS TABLE FOR
A SPECIFIED FIELD
MATCH. IF FOUND THE
ENTRY ADDRESS IS
GIVEN IN GPR3.
GPR5 IS THE LINK FROM
THE CALLER AND GPR4
MUST
INITIALLY POINT TO
THE COMPARISON ORDER
THAT IS TO
BE EXECUTED. THE
COMPARISON ORDER IS
OF THE FORM:-
CLC
ALPHA(BETA,31),
COMPBYTES
WHERE ALPHA IS THE
DISPLACEMENT OF THE
ENTRY, BETA
IS THE LENGTH TO BE
COMPARED AND
COMPBYTES IS A STRING
OF BYTES AGAINST
WHICH THE ENTRY IS TO
BE COMPARED.
GPR15 IS THE
ACCESSING REGISTER.
ENTRIES WITH BOTH
MISCLS
AND OURCLS SET ARE
SKIPPED.
**********************
**********************
**********************
******

 CE.(70-->*
  SEARCH  !        01
*--------------------*
!        MVC         !
!   FRTCB(4),ALL     !
!   SET PRTCB = 0    !
!                    !
! L     3,RVTABP     !
!  GET RENDEZVOUS    !
!    TABLE START     !
!      ADDRESS       !
*--------------------*
          !
 31.CE--->!
  LOOP    !        02
*--------------------*
!     LTR   3,3      !
! TEST POINTER FOR   !
!       ZERO         !
*--------------------*
          !
          !
          !
 (00110) *   03
       *   *
     *       *
   * BCR   8,5 *  CC=8
 *  RETURN - NC  *-*
   *    CC      *  !
     *       *    !
       *   *      !
          *       !
          *      ....
          !     .    .
          !     .    .
          !      ....
          ! REG. VALUE
          !
          !
 (00110F1) !        04
*--------------------*
!  !                 !
!  ! (REG. VALUE)    !
!  ! EX     0,0(4)   !
!  ! CC COMPARISON   !
!  !                 !
*--------------------*
          !
          !
          *--------------*
```

```
*------------------>*
!                   !
!          (0011821 *   05
!                 *   *
!               *       *
!     CC=7 *     RC     *
!   *-----*    7,LOOP1   *
!   !       *SKIP IF NOT*
!   !         * FOUND *
!   !           *   *
!   !             *
!   !             !
!   !             !
!   !             !
```

CHART TITLE - 'IMF INPUT INTERFACE'

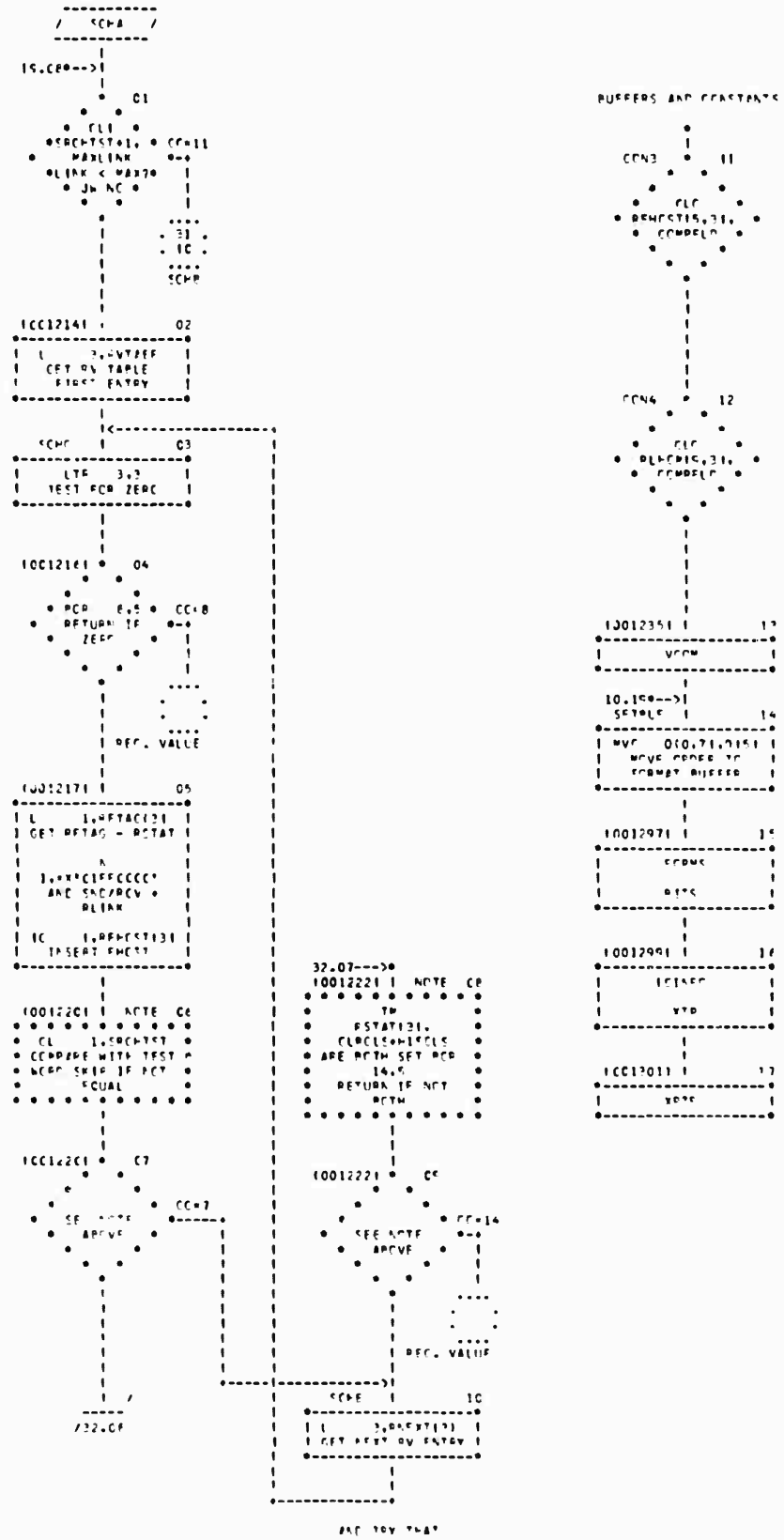

CHART TITLE - ECL STATEMENTS

```
      ___________
     / MAXLINK  /
     -----------
          |
          |
          |        01
 *--------------------*
 |  ECL STATEMENT     |
 *--------------------*
 | 72                 |
 *--------------------*
```

```
      ___________
     /   TINL   /
     -----------
          |
          |
          |        02
 *--------------------*
 |  ECL STATEMENT     |
 *--------------------*
 | 0-TIN              |
 *--------------------*
```

```
      ___________
     /  CRASH   /
     -----------
          |
 03.16--->|
          |        03
 *--------------------*
 |  ECL STATEMENT     |
 *--------------------*
 | ODC                |
 *--------------------*
```

CHART TITLE - CONSTANTS AND STORAGE AREAS

```
(000052) BASE1    DC    AL4(INF1)       START BASE
(000441) SVCHF    DS    1F
(000478) SRCHTST  DC    1F'0'
(000475) SPACE    DC    1F'0'
(000540) REMSCS   DC    1F'0'
(000541) REBITS   DC    1F'0'
(001231) CORFFLD  DC    3F'0'
(001271) TTN      DC    CL8'READY 75'  ********
(001241) HDR      DC    AL4(((MTXT-MTYPIMB)     PROTOCOL HEADER BITS
(001242) TXTBITS  DC    1F'0'
(001243) IMFBITS  DC    1F'0'
(001244) INTBLF   DC    20F'0'          INTERRUPT BUFFER
(001245) T        DC    2AL4(RVSIZ)     RV TABLE SIZE
(001246) TA       DC    2F'28'
(001247) TB       DC    2F'24'
(001248) TC       DC    2F'0'
(001249) TD       DC    2F'18'
(001250) F        DC    1D'0'
(001251) FREE     DC    1D'0'
(001252) QUERY    DC    CL8'????????'
(001254) CCC      DC    XL8'FFFFFFFFFFFFFFFF'
(001257) NULL     DC    1F'0'
(001258) HEADER   DC    3F'0'
(001259) FCINT    DC    1F'0'
(001260) BYTES    DC    1F'0'
(001261) RYSAV    DC    1F'0'
(001262) ERRCOD   DC    1F'0'
(001263) CURALLOC DC    1F'32000',F'100'
(001266) FRTCB    DC    1F'0'
(001267) HCBAD    DC    1F'0'
(001268) HCFREEIT DC    1F'0'
(001269) SAVE4    DC    4F'0'
(001270) ERPLF    DC    10F'0'
(001272) CODEC    DC    CL4' 0 '
(001273) CODE1    DC    CL4' 1 '
(001274) CODE2    DC    CL4' 2 '
(001275) CODE3    DC    CL4' 3 '
(001276) CODE4    DC    CL4' 4 '
(001277) CODE5    DC    CL4' 5 '
(001278) CODE6    DC    CL4' 6 '
(001279) CODE7    DC    CL4' 7 '
(001280) CODE8    DC    CL4' 8 '
(001281) CODE9    DC    CL4' 9 '
(001282) CODE10   DC    CL4' 10 '
(001283) CODE11   DC    CL4' 11 '
(001284) CODE12   DC    CL4' 12 '
(001285) CODE13   DC    CL4' 13 '
```

CHART TITLE - CONSTANTS AND STORAGE AREAS

```
(0001286)  CODE14   DC    CL4' 14 '
(0001287)  CCCE15   CC    CL4' 15 '
(0001288)  CCCE16   CC    CL4' 16 '
(0001289)  CCCE19   CC    CL4' 19 '
(0001290)  CCCE20   CC    CL4' 20 '
(0001291)  CCCE21   CC    CL4' 21 '
(0001292)  CCCE22   CC    CL4' 22 '
(0001293)  CCCE23   CC    CL4' 23 '
(0001294)  CCCE24   CC    CL4' 24 '
```

CHART TITLE - 'IMP OUTPUT INTERFACE'

```
      -----------
     /   IMPC   /
     -----------
          |
          |
          |  NOTE  01
* * * * * * * * * *
*     START C     *
* * * * * * * * * *
          |
          |
          |
**********************
**********************
**********************
*******
IMP CLT ROUTINE
OUTBUFFERS MUST BE
SET BY USING
ROUTINES. EG LOAD
IMPS C,RFNP
RECEIVED ETC.
ENTRY IS EITHER AT
IMPOUT (DEFAULT) OR
RIMPCLT.
INITIAL ENTRY DECIDES
WHETHER SICS ARE USED
OR NOT.
REGISTERS ARE AS
FOLLOWS:-
3   -  BUFFER
4   -  PREVIOUS
5   -  CURRENT
6   -  RV ENTRY
7   -  FORT TABLE
POINTER
10  -  RETURN LINK
THROUGH PWO
11  -  LOCAL BASE
12  -  COMMON BASE
**********************
**********************
**********************
*******
          |
          |
 RIMPCLT  |        02
*--------------------*
|        PVC         |
|   NEXT141,REFL     |
|      REPLACE       |
|  ARTIFICIAL WITH   |
|       REAL         |
*--------------------*
          |
          |
  IMPCLT  |        03
*--------------------*
|    BALR  11,0      |
| ARTIFICIAL ENTRY   |
*--------------------*
          |
          |
 (0000381 |        04
*--------------------*
| L      11,=A(IMPC) |
| ACW GET START AS   |
|        BASE        |
*--------------------*
          |
          |
          |
IMP OUTPUT ROUTINE
          |
 C1.CE*--->|<-----------|------*
  IMPST   |        C5  |      |
*--------------------*  |      |
|   LA    4,IPCC     |  |      |
|  SET PREVIOUS TO   |  |      |
| ADDRESS OF IMPS C  |  |      |
|                    |  |      |
|   L     5,0(4)     |  |      |
| GET 1ST ENTRY IN   |  |      |
|         0          |  |      |
|                    |  |      |
|  PVI   SWT,X'C0'   |  |      |
|   CLEAR SWITCH     |  |      |
|                    |  |      |
|     LTR   5,5      |  |      |
|      TEST IT       |  |      |
*--------------------*  |      |
          |             |      |
          |             |      |
          *-------------*      |
```

```
*-------------------->*
|                     |
|          (0000481 *   04
|                 *   *
|               *       *
|             *    BC     *  CC=7
|           *     7,IMPA     *-*
|             *NOP - ZERO *     |
|               * GO ON *       |
|                 *   *         |
|                   *         ----
|                   |       . 2 .
|                   |       . 03 .
|                   |       ----
|                   |        IMPA
|                   |
|                   |
|                   |
```

CHART TITLE - 'IMP OUTPUT INTERFACE'

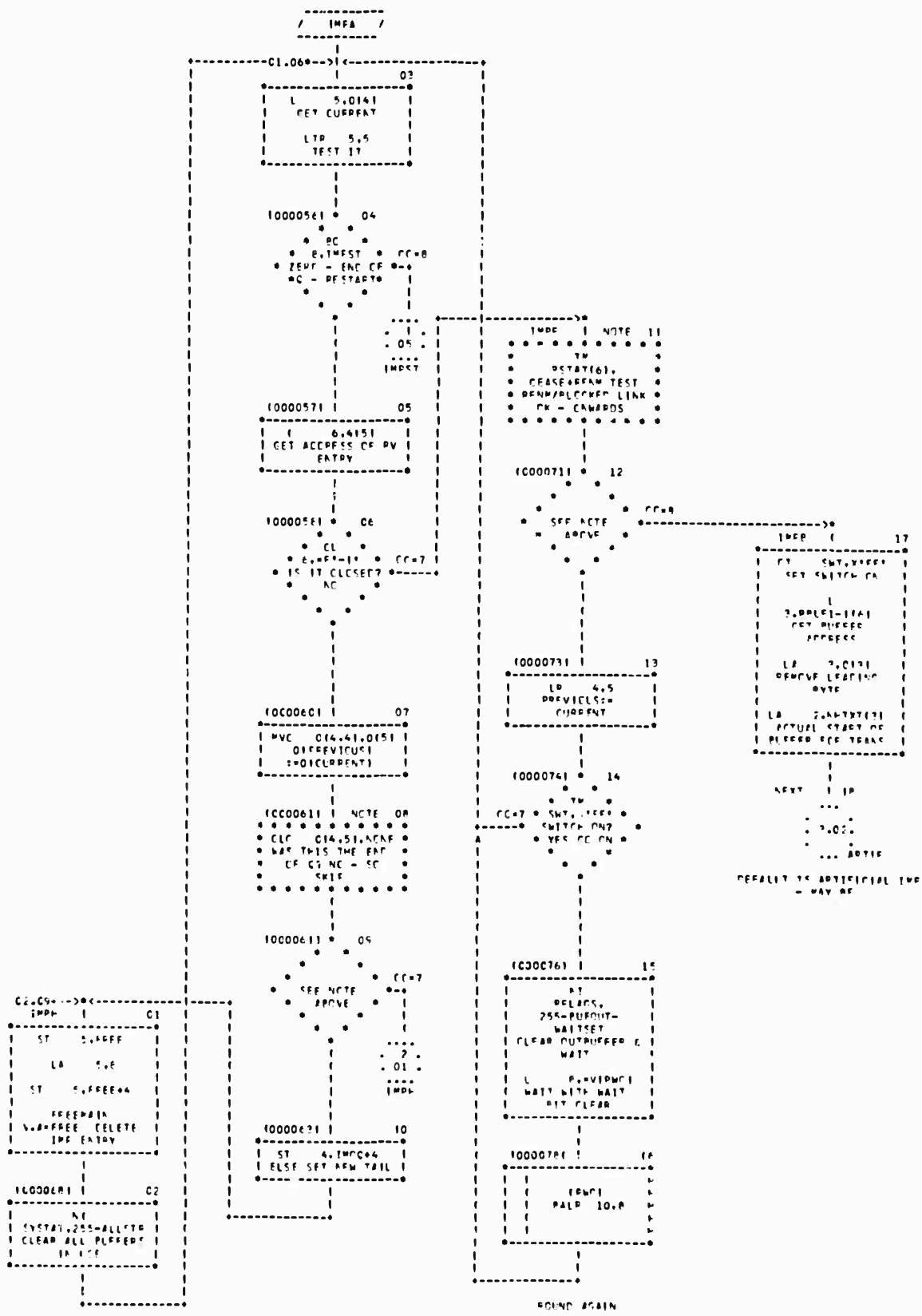

CHART TITLE - 'IMP OUTPUT INTERFACE'

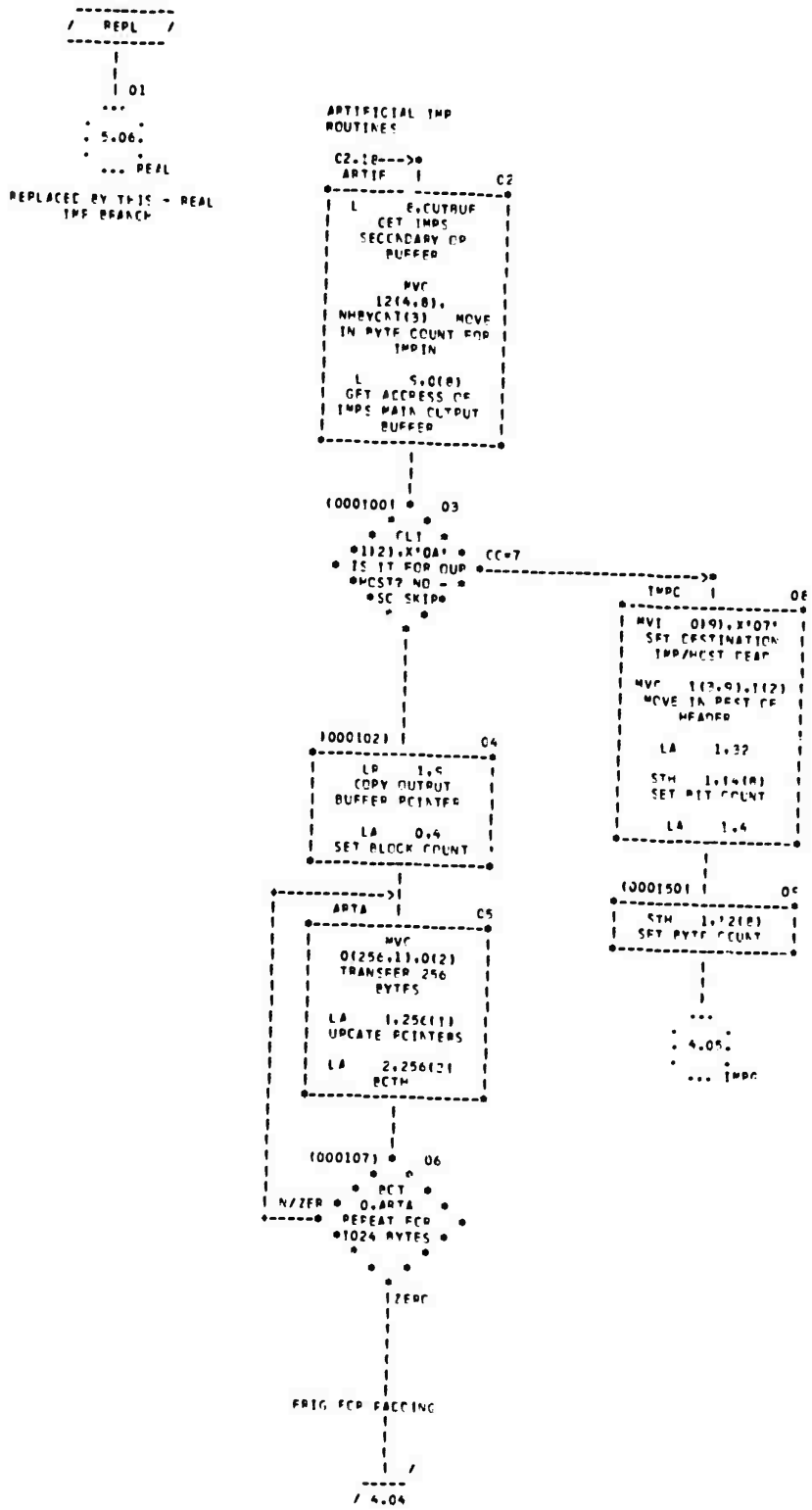

CHART TITLE - 'IMP OUTPUT INTERFACE'

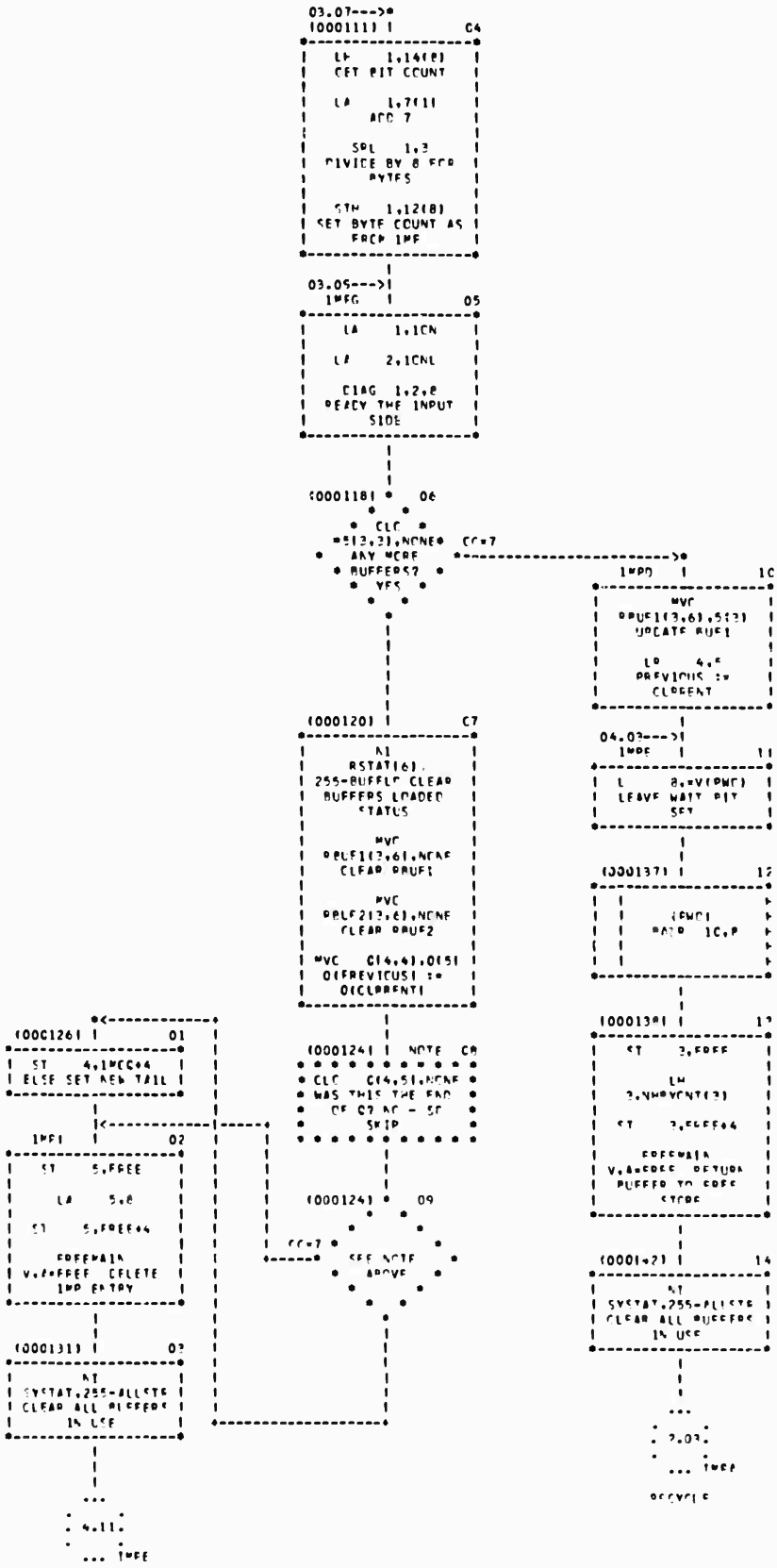

CHART TITLE - 'IPF CLTPLT INTERFACE'

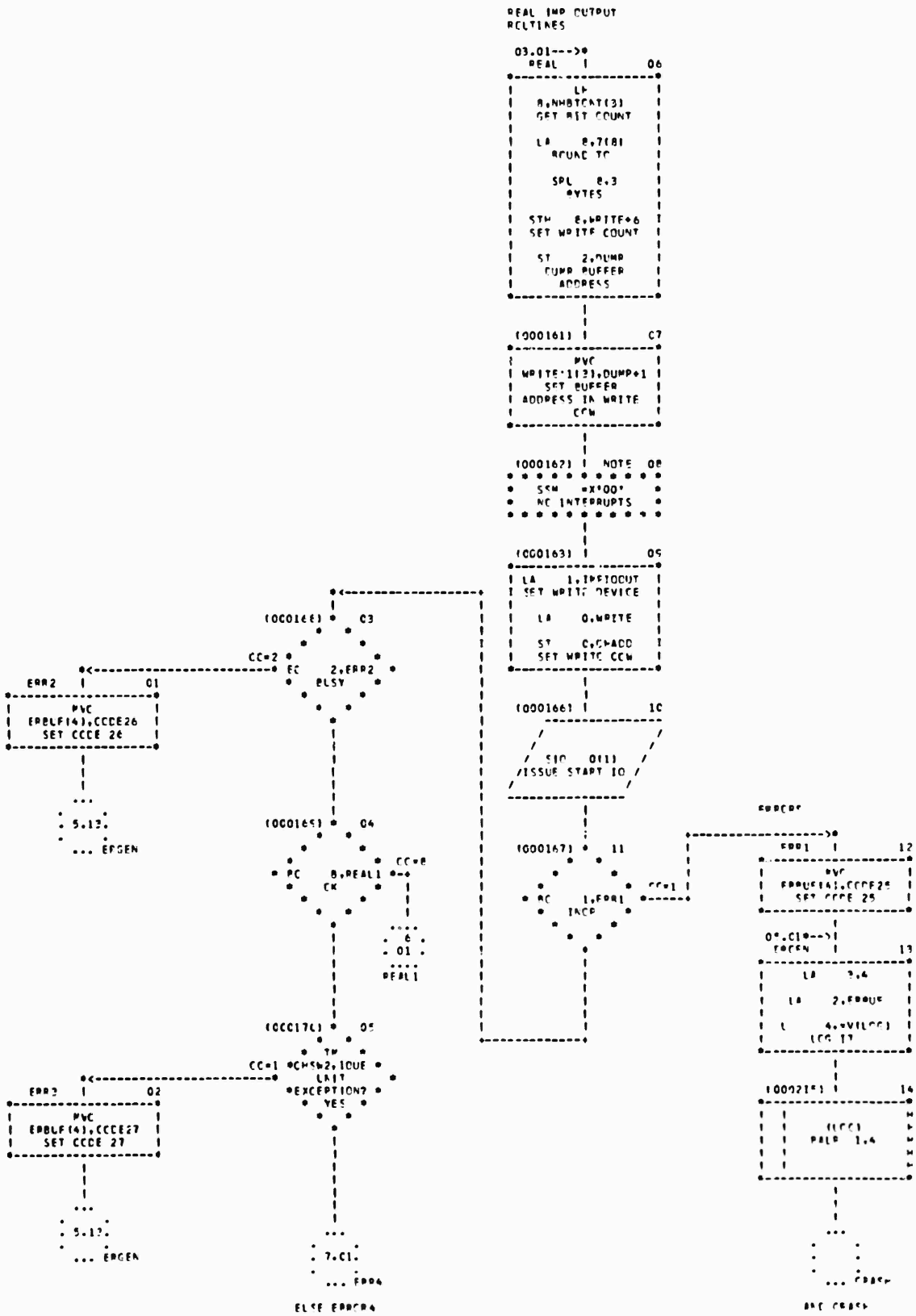

CHART TITLE - 'IMP OUTPUT INTERFACE'

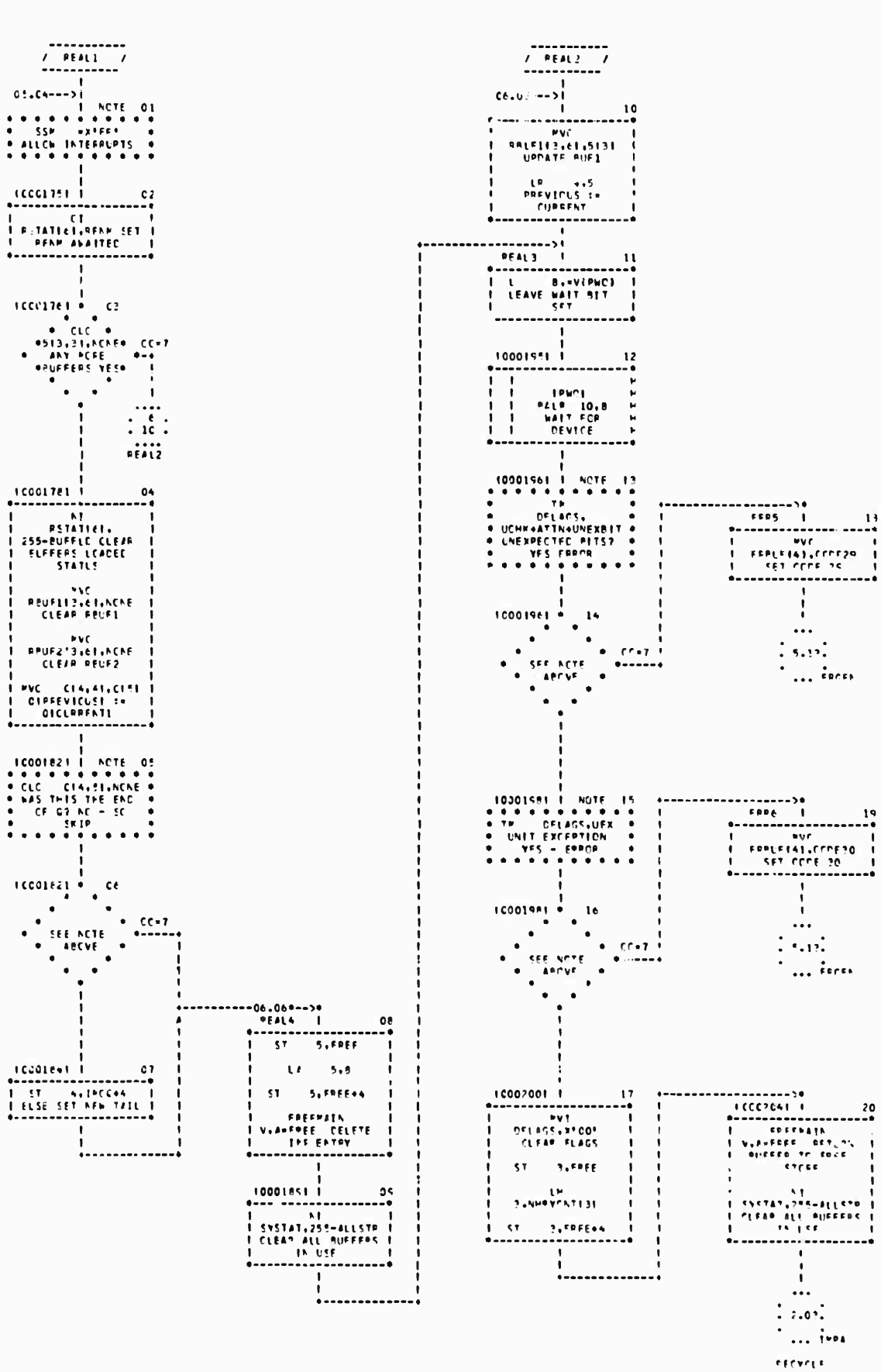

CHART TITLE - 'IPF OUTPUT INTERFACE'

```
      -----------
     /   ERR4   /
     -----------
          |
 05.05--->|
          |          01
*--------------------*
|        MVC         |
| EPBUF(4),CCDE28    |
|    SET CODE 28     |
*--------------------*
          |
          |
          |
         ...
       .     .
       . 5.13.
       .     .
         ... ERGEN
```

CONSTANTS

```
          *
 (000252) |          02
*--------------------*
|       FORMS        |
|                    |
|       BITS         |
*--------------------*
          |
          |
 (000254) |          03
*--------------------*
|      ICINFO        |
|                    |
|        XTP         |
*--------------------*
          |
          |
 (000256) |          04
*--------------------*
|       XPTF         |
*--------------------*
```

CHART TITLE - EQU STATEMENTS

```
      -----------
     /   ICNL   /
     -----------
          |
          |
          |        01
*--------------------*
|   EQU STATEMENT    |
*--------------------*
|  *-ICN             |
*--------------------*
```

CHART TITLE - CONSTANTS AND STORAGE AREAS

```
(0000230)  SWT      DC    1F'0'
(0000238)  CLMP     DC    1F'0'
(0000250)  ACNE     DC    1F'0'
(0000260)  ION      DC    CL2'READY 64'  ********
(0000268)  FREE     DC    2F'0'
(0000270)  CRASH    DC    1F'-1'
(0000244)  ERBUF    DC    1F'0'
(0000250)  CODE25   DC    CL4' 25 '
(0000260)  CODE26   DC    CL4' 26 '
(0000270)  CODE27   DC    CL4' 27 '
(0000280)  CODE28   DC    CL4' 28 '
(0000290)  CODE29   DC    CL4' 29 '
(00002C0)  CODE30   DC    CL4' 30 '
```

CHART TITLE - *MONITOR ROUTINE*

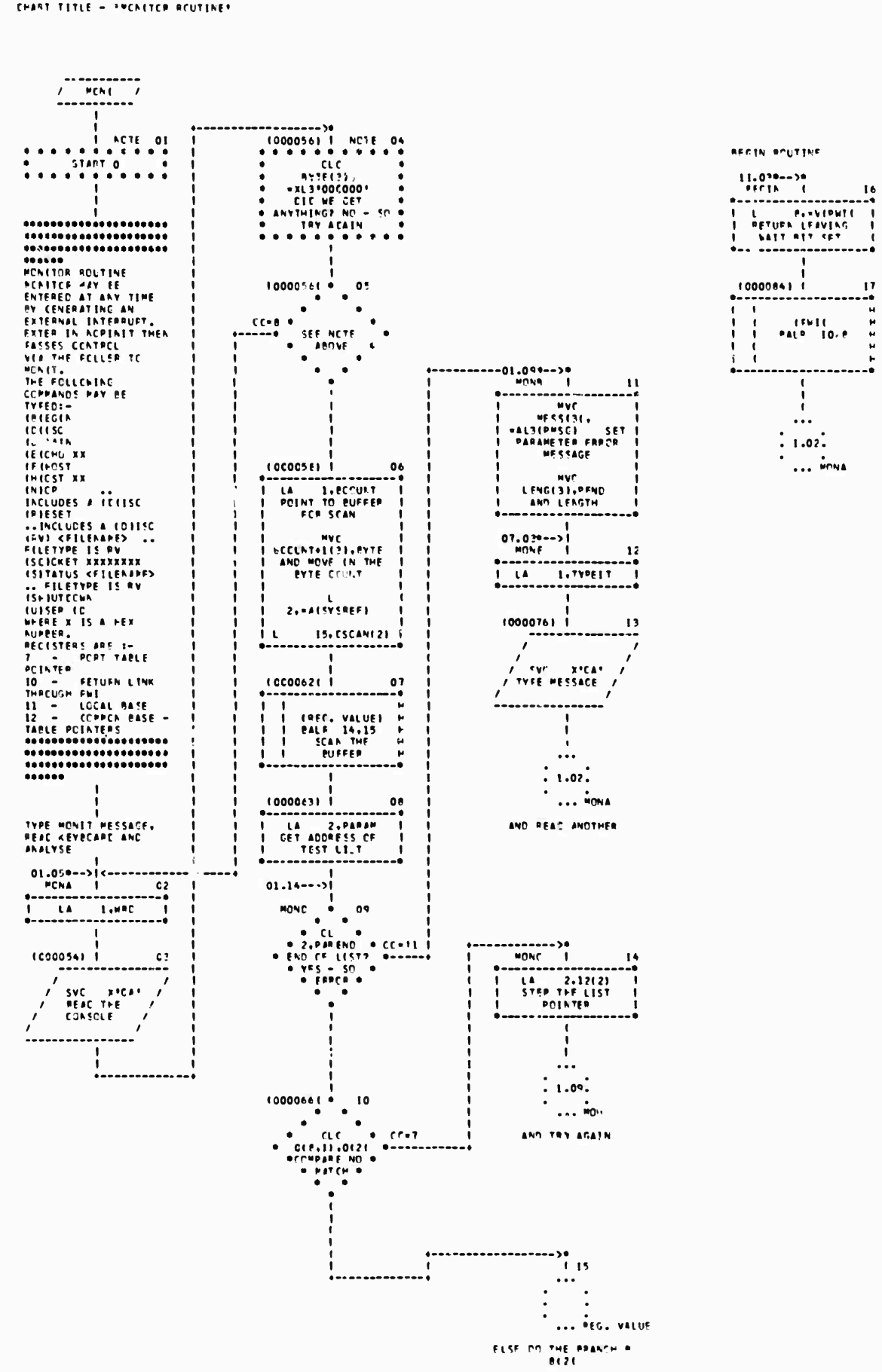

CHART TITLE - *MCATTCR ROUTINE*

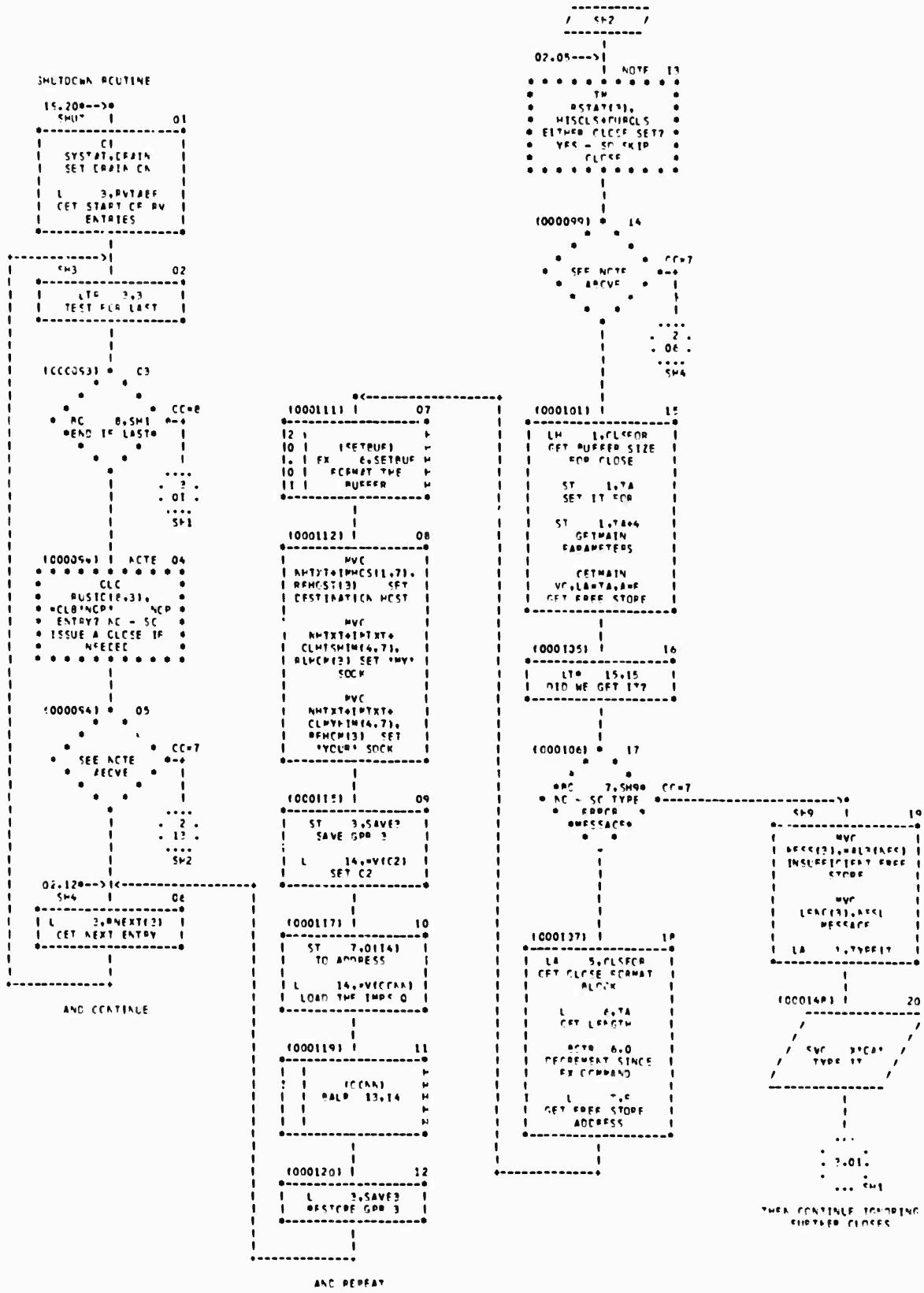

CHART TITLE - 'MONITOR ROUTINE'

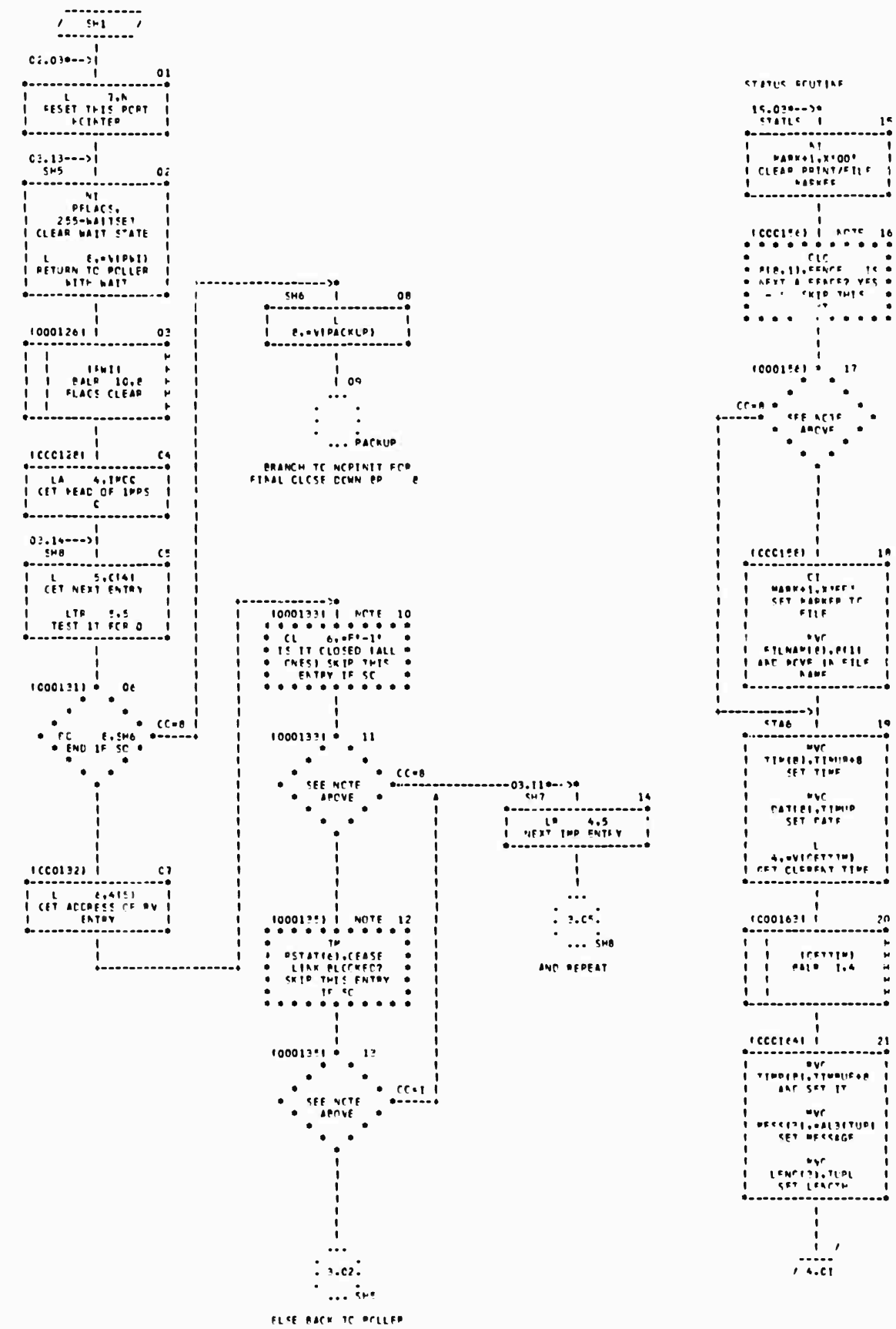

CHART TITLE - 'MCNITOR ROUTINE'

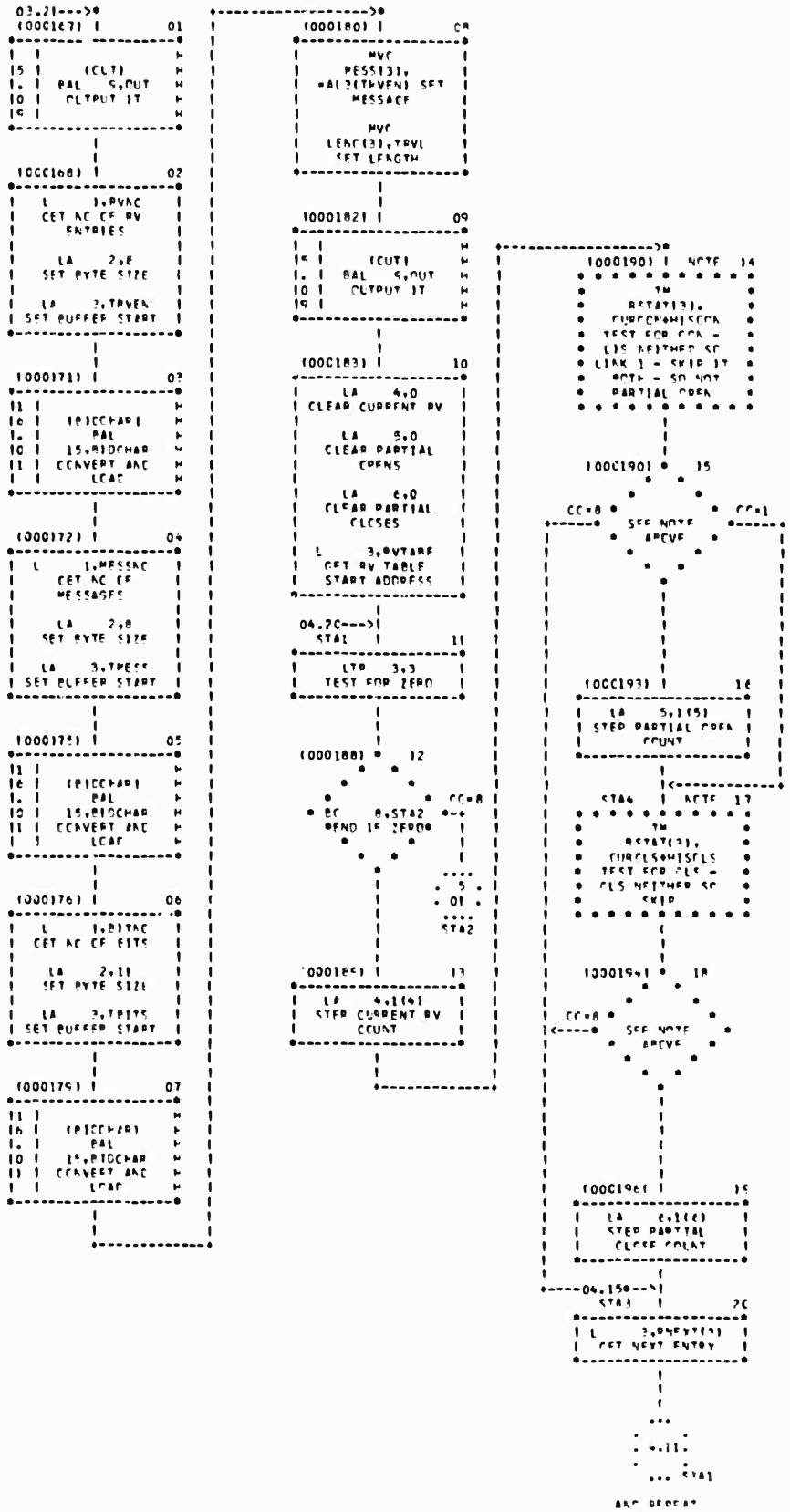

CHART TITLE - 'MONITOR ROUTINE'

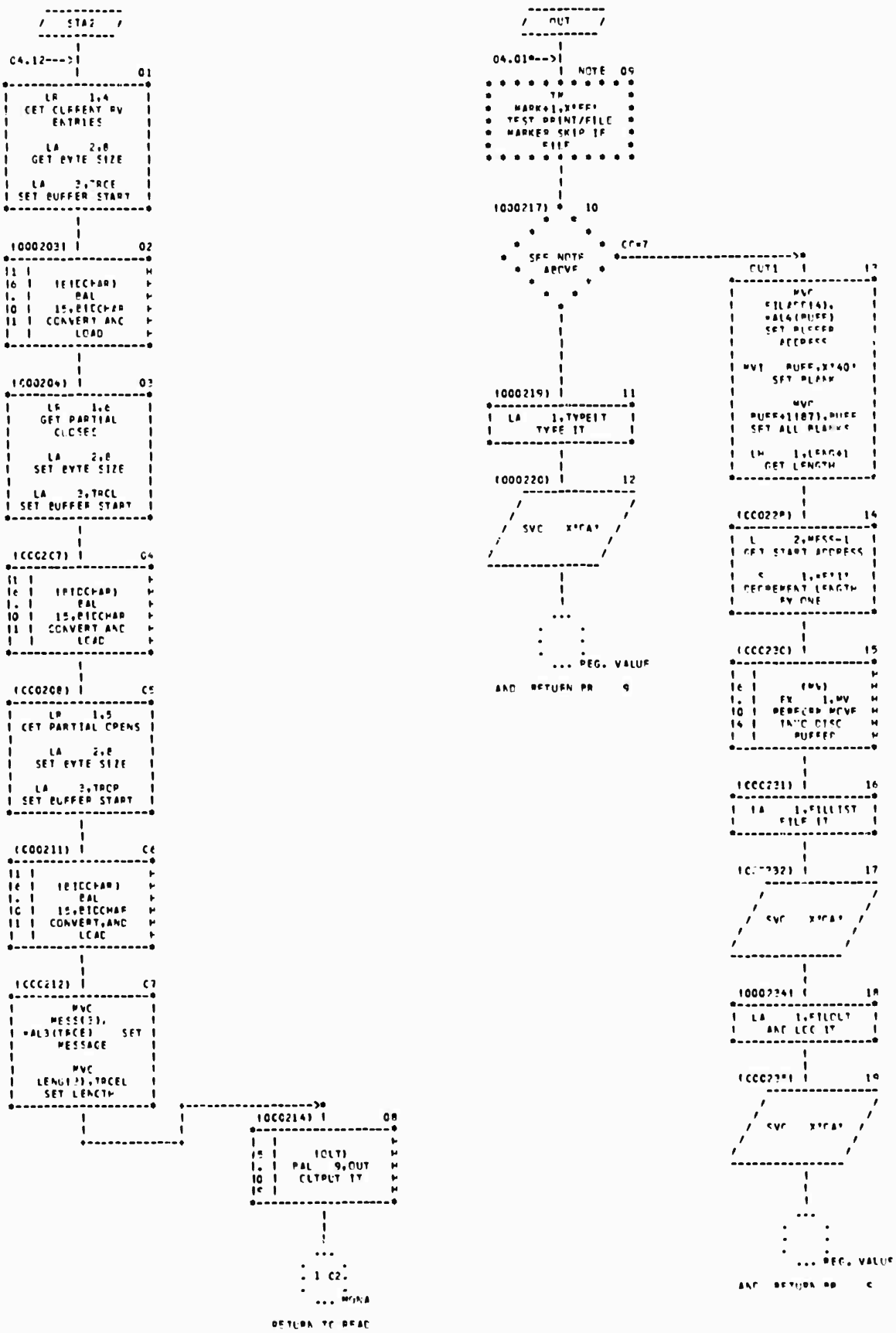

CHART TITLE - 'MCNITOR ROUTINE'

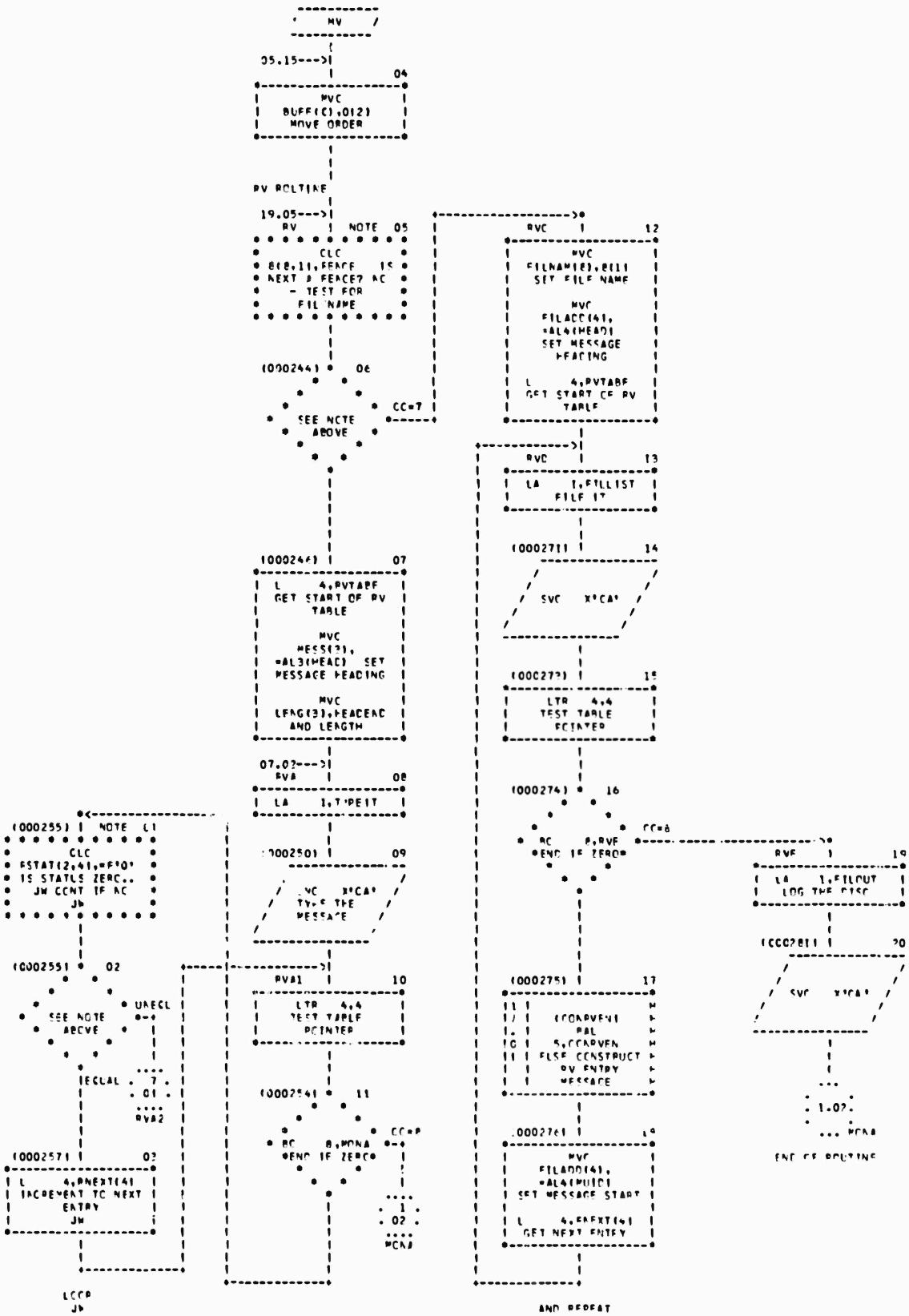

CHART TITLE - 'MONITOR ROUTINE'

```
 -----------
/   RVA2   /
-----------
     |
06.02--->|
         |        01
*-------------------*
|1 |                |
|7 |   (CONRVEA)    |
|. |      BAL       |
|0 |   5,CONRVEA    |
|1 | ELSE CONSTRUCT |
| |    RV ENTRY    |
| |    MESSAGE     |
*-------------------*
         |
         |
(000262) |        02
*-------------------*
|       MVC         |
|     MESS(31,      |
| =AL3(MUID)  SET   |
|     MESSAGE       |
|                   |
|       MVC         |
|   LENG(3),MENRV   |
|    AND LENGTH     |
|                   |
| L     4,MNEXT(4)  |
| GET NEXT ENTRY    |
*-------------------*
         |
         |
         |
        ...
       .   .
       . 6.08.
       .   .
        ... RVA

AND REPEAT


 -----------
/  FILERR  /
-----------
     |
     |
     |        03
*-------------------*
|       MVC         |
|     MESS(31,      |
| =AL3(FILMSG)      |
| SET ERROR MESSAGE |
|                   |
|       MVC         |
|   LENG(3),FILPL   |
|    AND LENGTH     |
*-------------------*
         |
         |
         |
        ...
       .   .
       . 1.12.
       .   .
        ... MONE

GO TYPE IT
```

```
USER ROUTINE

 19.12*-->*
   USER   |        04
*-------------------*
|        MVC        |
|   USER1(8),8(1)   |
|    GET USER ID    |
|                   |
|   LA    8,COMP1   |
|    GET USERID     |
| COMPARISON ORDER  |
*-------------------*
         |
         |
(000294) |        05
*-------------------*
|:|                 |
|5|     (USERE)     |
|.| BAL   9,USERE   |
|0|   SEARCH AND    |
|1|      PRINT      |
*-------------------*
         |
         |
(000295) |        06
*-------------------*
|      LTR   8,8    |
|       CK?         |
*-------------------*
         |
         |
(000296) |  NOTE  07
* * * * * * * * * * *
*   BC    8,MONE    *
*    YES - PRINT    *
* UNSUCCESSFUL MSG  *
*    AND RETURN     *
* * * * * * * * * * *
         |
         |
         |
(000296) *    08
        *   *
       *     *
      *       *  CC=8
     *  SEE NOTE   *-+
    *   ABOVE    *  |
     *         *   |
      *       *    |
        *   *      |
          *       ....
          |      . 1 .
          |      . 12 .
          |       ....
          |       MONE
          |
          |
         ...
       .   .
       . 1.02.
       .   .
        ... MONA

ELSE GO READ AGAIN
```

```
 -----------
/  COMP1   /
-----------
     |
     |
     |
     *    09
    *   *
   *  CLC  *
  * USER1(8), *
 *   RUSID(4)   *
  *COMPARISON *
   * ORDER *
    *   *
     *
     |
     |
     |
     |
     |
     |
     |
HOST ROUTINE
     |
 19.L69*-->|
   HOST    |        10
*-------------------*
|    LA    1,8(1)   |
|   STEP POINTER    |
*-------------------*
         |
         |
(000334) |        11
*-------------------*
|1 |                |
|6 |    (HEXRTA)    |
|. | BAL   3,HEXBIN |
|0 |    CONVERT     |
|6 |                |
*-------------------*
         |
         |
(000305) |        12
*-------------------*
|       MVC         |
| USER1(1),HEXRES   |
|     GET HOST      |
|                   |
|    LA    8,COMP2  |
|     GET HOST      |
| COMPARISON ORDER  |
*-------------------*
         |
         |
(000307) |        13
*-------------------*
|1 |                |
|5 |    (USERE)     |
|. | BAL   9,USERE  |
|0 |   SEARCH AND   |
|1 |      PRINT     |
*-------------------*
         |
         |
(000308) |        14
*-------------------*
|      LTR   8,8    |
|       CK?         |
*-------------------*
         |
         |
(000339) *    15
        *   *
       *     *
      *  BC    *
     *  8,MONE   *  CC=8
    *  YES - PRINT  *-+
    *UNSUCCESSFUL*   |
     *   |   *       |
      *  |  *        |
        *   *        |
          *         ....
          |        . 1 .
          |        . 12 .
          |         ....
          |         MONE
          |
          |
          |
         ...
       .   .
       . 1.02.
       .   .
        ... MONA

OR GO READ AGAIN
```

CHART TITLE - 'PCMITOR ROUTINE'

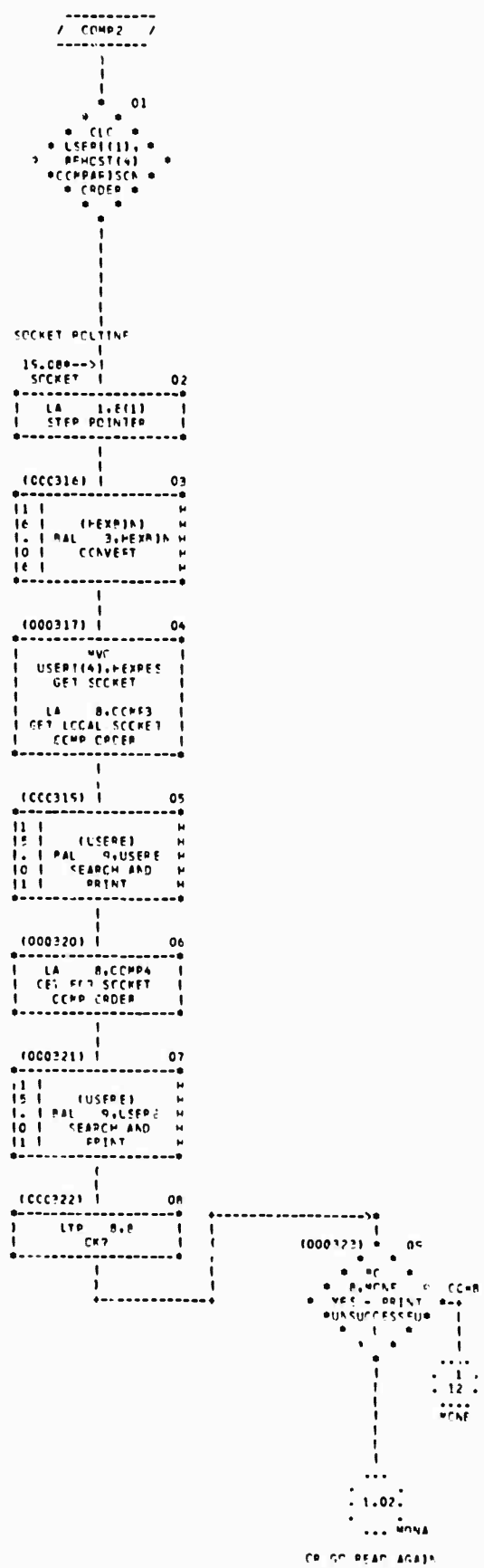

CHART TITLE - 'MONITOR ROUTINE'

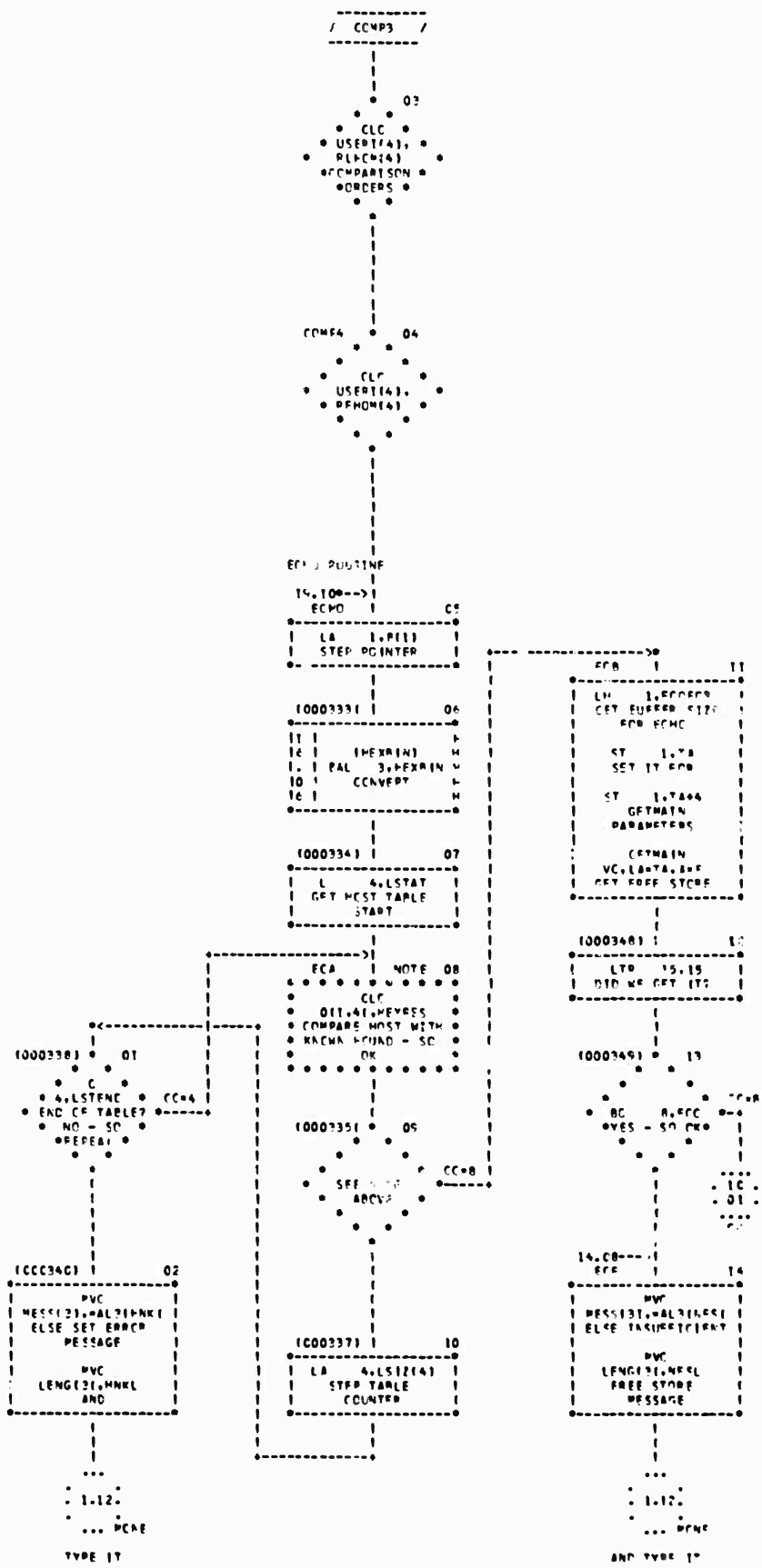

CHART TITLE - "MONITOR ROUTINE"

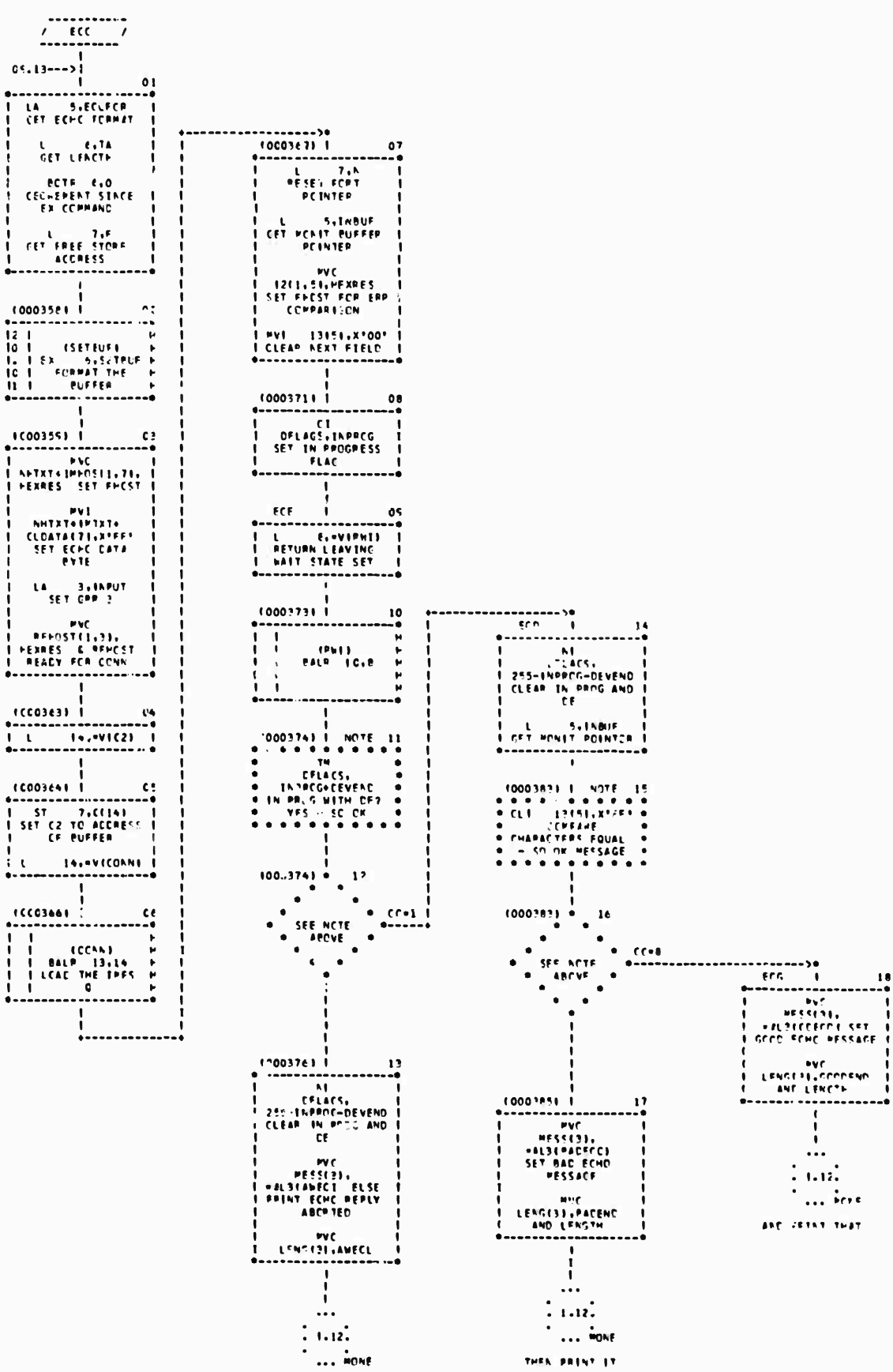

CHART TITLE - 'MONITOR ROUTINE'

DISCONNECT

```
 14.059-->*
   DISC   I          01
*--------------------*
I  LA     2,RUNUSER  I
I                    I
I    DIAG  2,3,0     I
I                    I
I        LA          I
I   2,TIMEON+4(3)    I
I                    I
I    DIAG  2,3,0     I
I                    I
I   ST     3,TEMP    I
*--------------------*
          I
          I
 (0004C4) I  ACTE  02
* * * * * * * * * * *
*        TM         *
*  TEMP+DISCNRYT,   *
*     DISCNRIT      *
*   DISCONNECTED    *
* ALREADY? YES - SC *
*       RECIN       *
* * * * * * * * * * *
          I
          I
          I
 (0004C4) *   03
        *   *
      *       *
    *           *  CC=1
  *   SEE NOTE    *--*
    *   ABOVE   *    I
      *       *      I
        *   *        I
          *        ....
          I       . 1 .
          I       . 16 .
          I        ....
          I       RECIN
          I
          I
 (0004C6) I         04
*--------------------*
I    LA    2,DIS     I
I                    I
I   LA     3,DISL    I
I                    I
I    DIAG  2,3,8     I
I    DISCONNECT      I
*--------------------*
          I
          I
          I
         ...
       .     .
       . 1.16.
       .     .
         ... RECIN
```

DRAIN ROUTINE

```
 19.229-->*
   DRA    I          05
*--------------------*
I        CI          I
I   SYSTAT,DRAIN     I
I   SET DRAIN ON     I
*--------------------*
          I
          I
          I
          .
       .     .
       . 1.02.
       .     .
         ... MONA
```

RETURN TO MONIT

CHART TITLE - 'MONITOR ROUTINE'

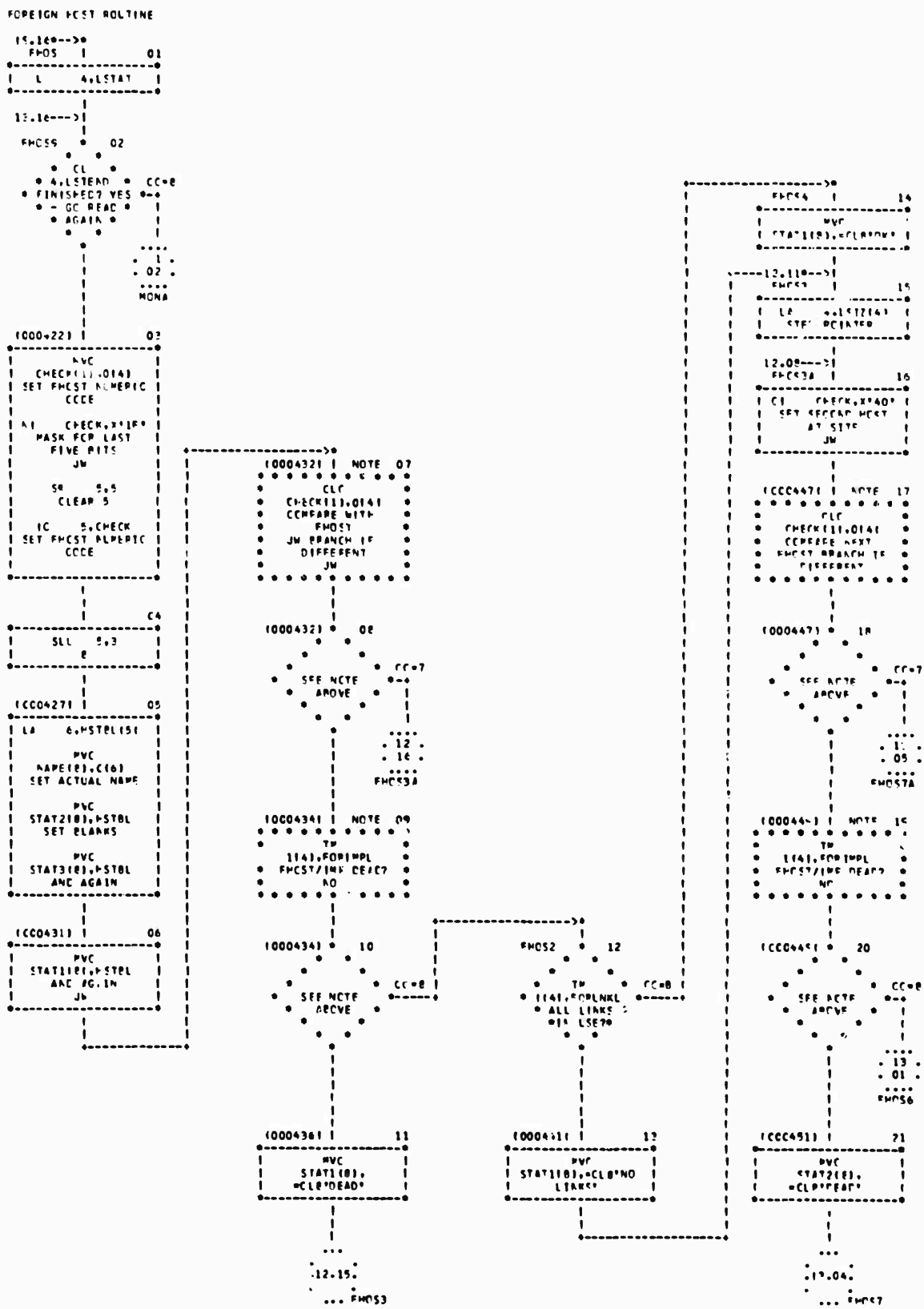

CHART TITLE - 'MONITOR ROUTINE'

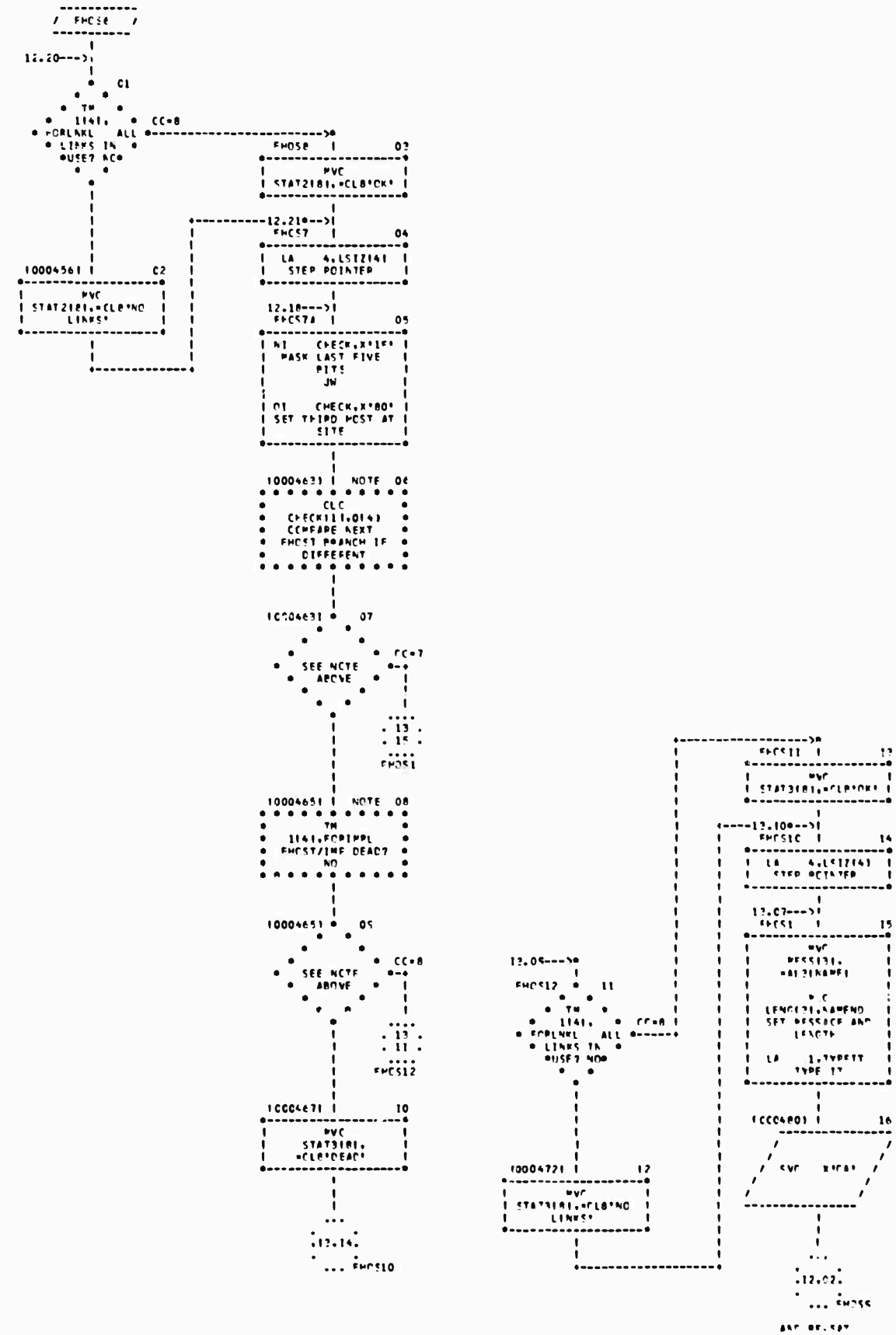

CHART TITLE - 'MONITOR ROUTINE'

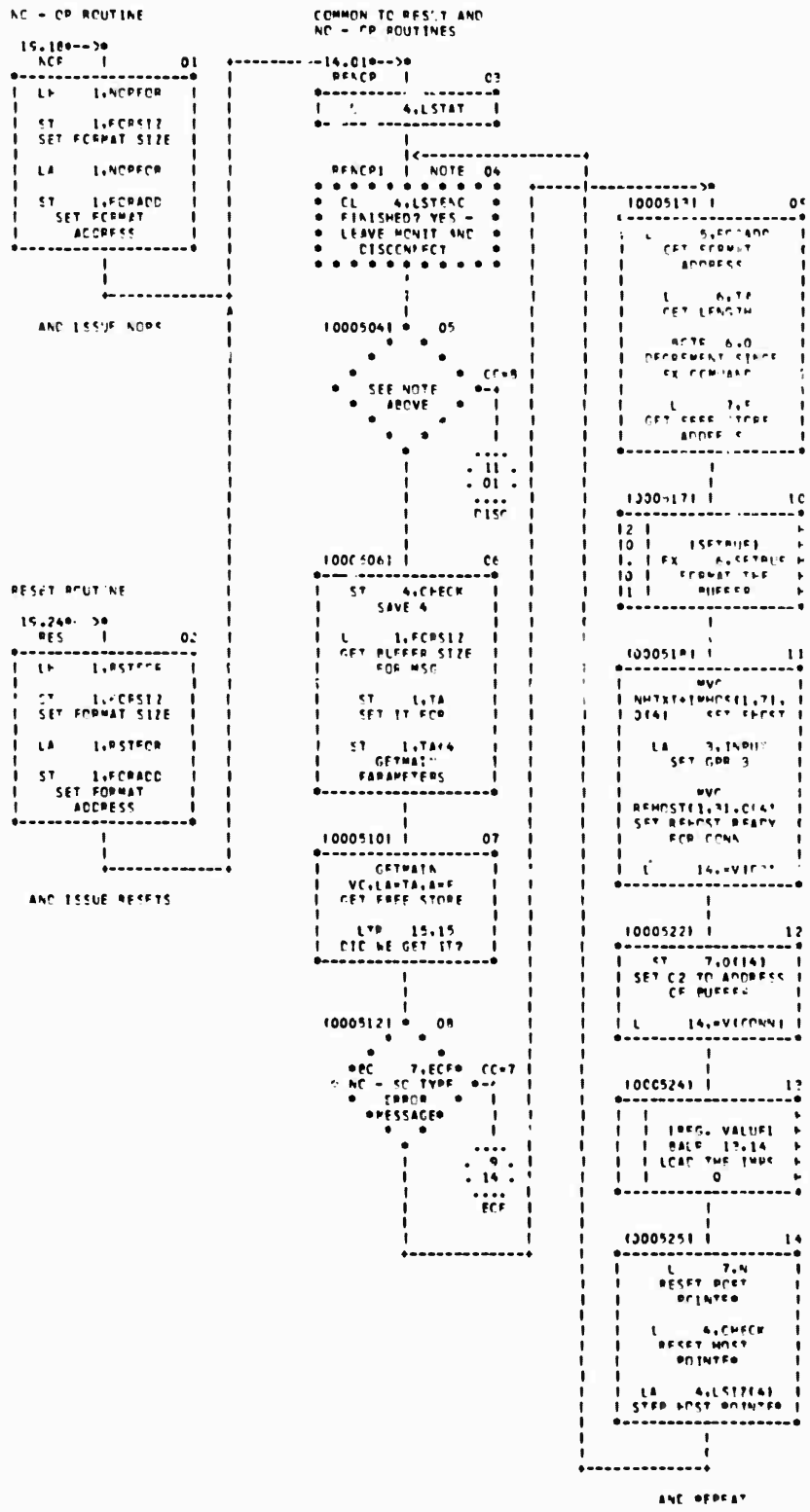

CHART TITLE - 'MONITOR ROUTINE'

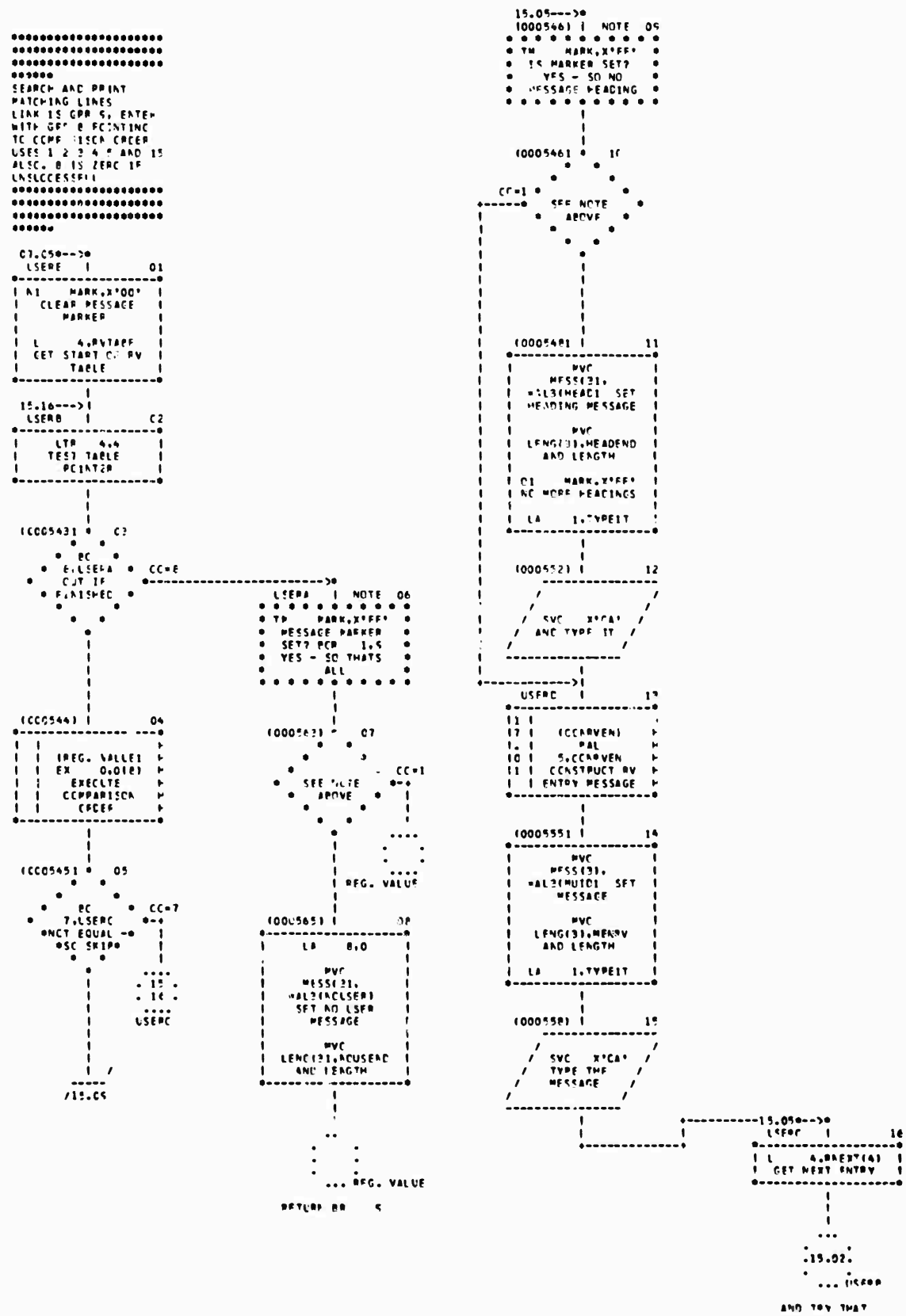

CHART TITLE - 'MONITOR ROUTINE'

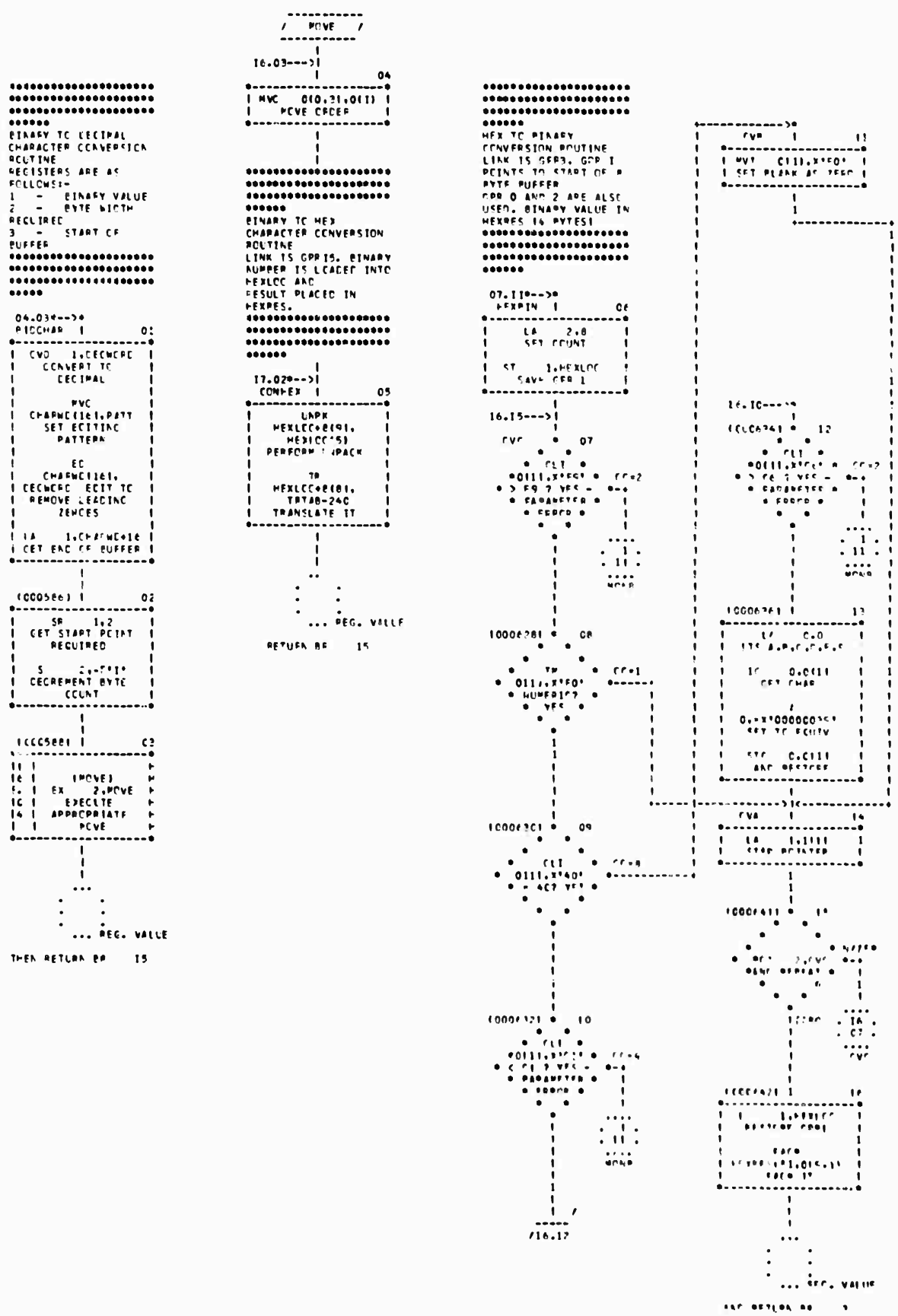

CHART TITLE - 'MCAITCR RCLTINE'

```
                                  *------------------->*
                                  |        (000670) |        06
**********************            |        *--------------------*
**********************            |        |1 |                H
**********************            |        |6 |    (CONHEX)    H
******                            |        |. |      BAL       H
CONSTRUCT AN RV ENTRY             |        |0 |   15,CONHEX    H
RCLTINE                           |        |5 | CONVERT TO HEX H
REGISTERS 1,2,3 & 15              |        *--------------------*
ARE USED BY BIOCHAR               |                 |
AND CONHEX. GPR 4                 |                 |
MUST POIT TO THE                  |        (000671) |        07
START OF THE RV ENTRY             |        *--------------------*
CONCERNED. GPR 15 THE             |        |        MVC        |
LINK. RESULT IS                   |        | MESG1(2),HEXRES   |
LOADED INTO MLIC                  |        |     SET ERCM      |
BUFFER.                           |        |                   |
**********************            |        |        MVC        |
**********************            |        | MESG2(4),HEXRES+2 |
**********************            |        |     SET ERADG     |
******                            |        |                   |
                                  |        |        MVC        |
 06.170-->*                       |        | MESG3(2),HEXRES+6 |
 CONRVEA  |        01             |        |     SET ERAG      |
*--------------------*             |        |                   |
|        MVC         |            |        |     LA    1,0     |
| MLID(8),RUSID(4)   |            |        *--------------------*
|   SET USERS ID     |            |                 |
|                    |            |                 |
|        MVC         |            |        (000675) |        08
|    HEXLCC(4),      |            |        *--------------------*
| RLHCP(4)  MOVE IN  |            |        | IC    1,RLINK(4)  |
|   LOCAL SOCKET     |            |        |     SET LINK      |
*--------------------*             |        |                   |
          |                        |        |     LA    2,4     |
          |                        |        |   SET BYTE SIZE   |
 (000662) |        02              |        |                   |
*--------------------*             |        |   LA    3,MLIN    |
|1 |                H             |        | SET BUFFER START  |
|6 |    (CONHEX)    H             |        *--------------------*
|. |      BAL       H             |                 |
|0 |   15,CONHEX    H             |                 |
|5 | CONVERT TO HEX H             |        (000676) |        09
*--------------------*             |        *--------------------*
          |                        |        |1 |                H
          |                        |        |6 |   (BIOCHAR)    H
 (000663) |        03              |        |. |      BAL       H
*--------------------*             |        |0 |   15,BIOCHAR   H
|        MVC         |            |        |1 |  CONVERT AND   H
|  MLSC1(2),HEXRES   |            |        | |       LOAD      H
|     SET LHOM       |            |        *--------------------*
|                    |            |                 |
|        MVC         |            |                 |
| MLSC2(4),HEXRES+2  |            |        (000679) |        10
|     SET LPADG      |            |        *--------------------*
|                    |            |        |        MVC        |
|        MVC         |            |        |    HEXLCC(2 ,     |
| MLSD3(2),HEXRES+6  |            |        | RSTAT(4)  MOVE IN |
|     SET LTAG       |            |        |       STATUS      |
|                    |            |        *--------------------*
|        MVC         |            |                 |
|    HEXLCC(1,,      |            |                 |
| RHOST(4) MOVE IN   |            |        (000680) |        11
|       HOST         |            |        *--------------------*
*--------------------*             |        |1 |                H
          |                        |        |6 |    (CONHEX)    H
          |                        |        |. |      BAL       H
 (000667) |        04              |        |0 |   15,CONHEX    H
*--------------------*             |        |5 | CONVERT TO HEX H
|1 |                H             |        *- ----------------*
|6 |    (CONHEX)    H             |                 |
|. |      BAL       H             |                 |
|0 |   15,CONHEX    H             |        (000681) |        12
|5 | CONVERT TO HEX H             |        *--------------------*
*--------------------*             |        |        MVC        |
          |                        |        |  MSTAT(4),HEXRES  |
          |                        |        |    SET STATUS     |
 (000668) |        05              |        |                   |
*--------------------*             |        | LH    1,RBALL(4)  |
|        MVC         |            |        |     GET MSG       |
|  RHEC(2),HEXRES    |            |        |    ALLOCATION     |
|     SET RHOST      |            |        |                   |
|                    |            |        |     LA    2,8     |
|        MVC         |            |        |   SET BYTE SIZE   |
|    HEXLCC(4),      |            |        |                   |
| RHCH(4)  MOVE IN   |            |        |   LA    3,MBALL   |
|     R SOCKET       |            |        | SET BLOCK START   |
*--------------------*             |        *--------------------*
          |                        |                 |
          |                        |                 |
          *--------------*         |                 |
                                                     |  /
                                                    -----
                                                   /1R.01
```

CHART TITLE - 'MONITOR ROUTINE'

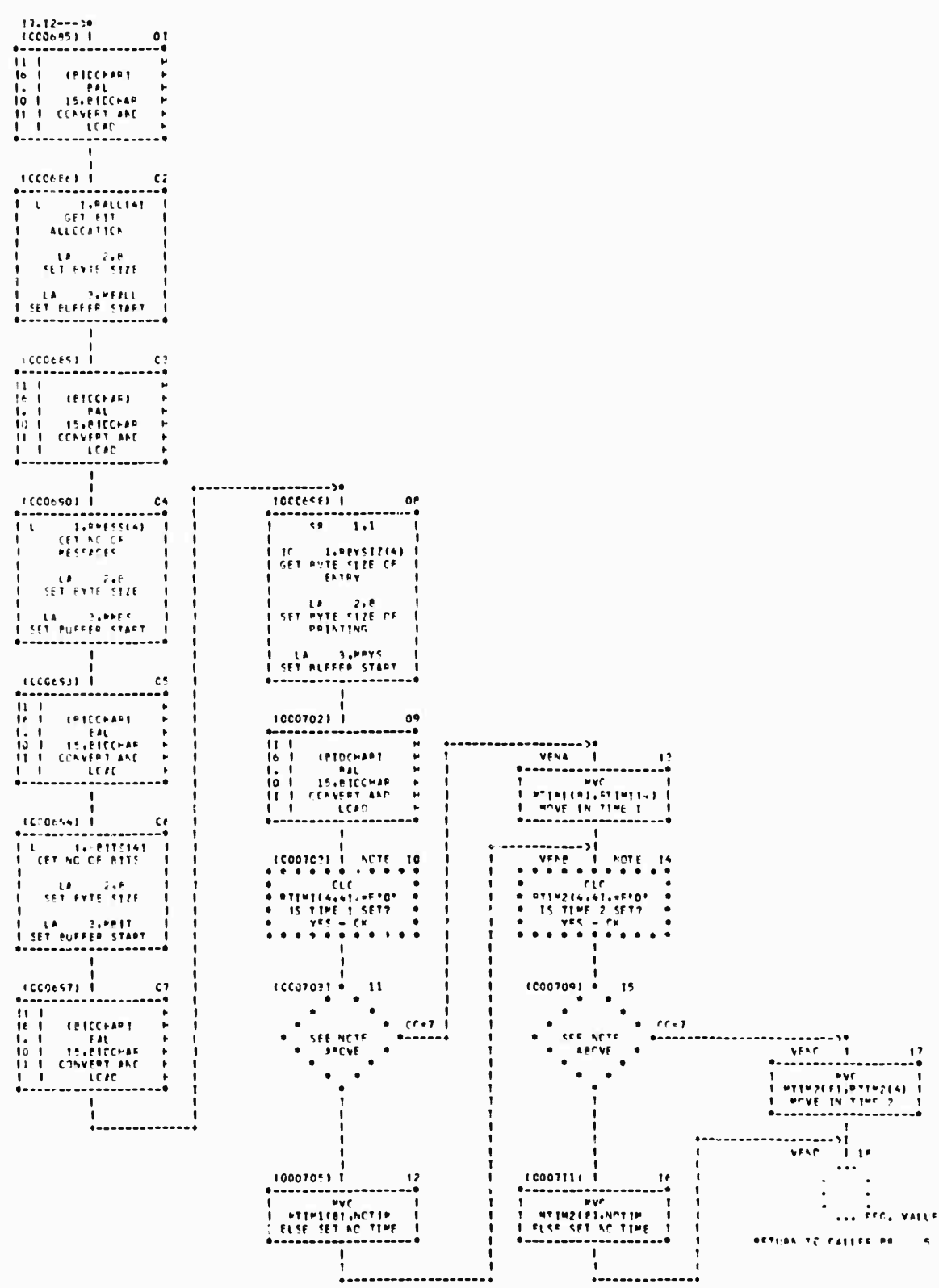

CHART TITLE - 'MCNITCR RCUTINE'

CCNSTANTS ANC
VARIABLES

C1
1.1E.
... BEGIN

(0007234) / 07 7.1C. ... HCST

(CCC7481) / 14 .11.01. ... DISC

(C007621) / 21 2.C1. ... SHUT

(0007261) / 08 8.02. ... SCCKET

(0007501) / 15 .11.C1. ... DISC

(C007641) / 22 .11.C5. ... FCB

(CCC7261) / C2 1.1E. ... BEGIN

(CCC7381) / 09 8.C2. ... SOCKET

(0007521) / 16 .12.C1. ... FHCS

(CCC7661) / 23 .11.05. ... FCB

(CCCC72E) / C3 3.15. ... STATUS

(C007401) / 10 9.C5. ... ECHC

(0007541) / 17 .12.C1. ... FHCS

(CCC7681) / 24 .14.C2. ... BFS

(CCCC72E) / C4 3.15. ... STATUS

(C0073C) / C5 6.05. ... RV

(C007421) / 11 9.C5. ... ECHC

(0007561) / 18 .14.01. ... NOP

(CCC7701) / 25 .14.C2. ... BFS

(0007321) / C6 7.1C. ... HCST

(0007441) / 12 7.C4. ... USER

(0007581) / 19 .14.01. ... NOP

(CCC7461) / 13 7.C4. ... USER

(0007601) / 20 2.C1. ... SHUT

CHART TITLE - 'MONITOR ROUTINE'

```
      -----------
     /  SETBUF  /
     -----------
          |
 02.070-->|
          |          01
*--------------------*
| MVC   0(0,7),0(5)  |
|   MOVE ORDER TO    |
|   FORMAT BUFFER    |
*--------------------*
          |
          |
 (000542) |          02
*--------------------*
|       FORMS        |
|                    |
|      OPMACRO       |
*--------------------*
          |
          |
 (000944) |          03
*--------------------*
|       BITS         |
|                    |
|        XTB         |
*--------------------*
          |
          |
 (000546) |          04
*--------------------*
|       XDTF         |
*--------------------*
```

CHART TITLE - EQU STATEMENTS

```
      -----------
     /   CISL   /
     -----------
          |
          |
          |        01
*--------------------*
|   EQU STATEMENT    |
*--------------------*
|  *-CIS             |
*--------------------*
```

```
      -----------
     /  DSCAN   /
     -----------
          |
          |
          |        02
*--------------------*
|   EQU STATEMENT    |
*--------------------*
|  56                |
*--------------------*
```

CHART TITLE - CONSTANTS AND STORAGE AREAS

```
(0000055)          DC    AL4(*-*)
(0000077)          DC    AL4(*-*)
(0000145)          DC    AL4(*-*)
(0000221)          DC    AL4(*-*)
(0000233)          DC    AL4(FILERR)
(0000236)          DC    AL4(*-*)
(0000251)          DC    AL4(*-*)
(0000272)          DC    AL4(FILERR)    FILE ERROR
(0000282)          DC    AL4(*-*)
(0000353)  TA      DC    10*0*
(0000354)  F       DC    10*0*
(0000481)          DC    AL4(*-*)
(0000553)          DC    AL4(*-*)
(0000555)          DC    AL4(*-*)
(0000560)  DECWORD DC    10*C*
(0000593)  CHARWC  DC    4F*0*
(0000594)  PATT    DC    XL16*40202020202020202020202020212C*
(0000611)  HEXLCC  DC    2F*0*
(0000612)  HEXRES  DC    4F*0*
(0000721)  PARAM   DC    CL8*BEGIN*
(0000723)          DC    CL8*B*
(0000725)          DC    CL8*STATUS*
(0000727)          DC    CL8*S*
(0000729)          DC    CL8*RV*
(0000731)          DC    CL8*HOST*
(0000733)          DC    CL8*H*
(0000735)          DC    CL8*SOCKET*
(0000737)          DC    CL8*SC*
(0000739)          DC    CL8*ECHO*
(0000741)          DC    CL8*E*
(0000743)          DC    CL8*USER*
(0000745)          DC    CL8*U*
(0000747)          DC    CL8*DISC*
(0000749)          DC    CL8*D*
(0000751)          DC    CL8*HDS*
(0000753)          DC    CL8*F*
(0000755)          DC    CL8*ACK*
(0000757)          DC    CL8*N*
(0000759)          DC    CL8*SHUTDOWN*
(0000761)          DC    CL8*SH*
(0000763)          DC    CL8*DRAIN*
(0000765)          DC    CL8*DR*
(0000767)          DC    CL8*RESET*
(0000769)          DC    CL8*R*
(0000771)  PARERC  DC    AL4(0)
(0000773)  EMSG    DC    CL16*PARAMETER ERROR *
(0000774)  EERC    DC    AL3(0-EMSG)
```

CHART TITLE - CONSTANTS AND STORAGE AREAS

```
(0000776)  CIS      DC    C'CISC HOLD'
(0000785)  TUP      DC    C'TIME UP '
(0000786)  TIM      DC    8X'00'
(0000787)           DC    C' CN '
(0000788)  CAT      DC    8X'C0'
(0000789)           DC    C', TIME PRINTED '
(0000790)  TIMP     DC    8X'00'
(0000791)  TUPL     DC    AL2(*-TUP)
(0000792)  TRVCS    DC    8X'00'
(0000794)  TRV      DC    C' TOTAL RV ENTRIES, '
(0000795)  TMESS    DC    6X'00'
(0000796)           DC    C' TOTAL MESSAGES, '
(0000797)  TBITS    DC    11X'C0'
(0000798)           DC    C' TOTAL BITS.'
(0000799)  TRVL     DC    AL3(*-TRVER)
(0000801)  TRCE     DC    8X'00'
(0000802)  TRC      DC    C' CURRENT  ENTRIES, '
(0000803)  TRCL     DC    8X'00'
(0000804)           DC    C' PARTIAL CLOSES,    '
(0000805)  TROP     DC    8X'00'
(0000806)           DC    C' PARTIAL OPENS,'
(0000807)  TRCEL    DC    AL3(*-TRCE)
(0000810)  MUIP     DC    8X'C0',C' '
(0000811)  MLSC1    DC    2X'00',C'-'
(0000812)  MLSC2    DC    4X'00',C'-'
(0000813)  MLSC3    DC    2X'C0',C' '
(0000814)  MHFD     DC    2X'C0',C' '
(0000815)  MFSC1    DC    2X'C0',C'-'
(0000816)  MFSC2    DC    4X'00',C'-'
(0000817)  MFSC3    DC    2X'C0',C' '
(0000818)  MLIN     DC    4X'00',C' '
(0000819)  MSTAT    DC    4X'00',C' '
(0000820)  MMALL    DC    8X'C0',C' '
(0000821)  MRALL    DC    8X'00',C' '
(0000822)  MMES     DC    8X'00',C' '
(0000823)  MBIT     DC    8X'C0',C' '
(0000824)  MRYS     DC    8X'C0',C' '
(0000825)  MTIM1    DC    8X'00',C' '
(0000826)  MTIM2    DC    8X'00'
(0000827)  MEARV    DC    AL3(*-MUIP)
(0000829)  ACTIP    DC    C'00:00:00'
(0000830)  MHAC     DC    C'USER-ID   L-SOCKET HOST F-SOCKET  LINK STAT'
(0000831)           DC    C' MSGALLOC BITALLOC MSGTOTAL BITTOTAL BYTESIZE'
(0000832)           DC    C'   TIME1    TIME2 '
(0000833)  MHEADEND DC    AL3(*-MHEAD)
(0000834)  ACUSER   DC    C'AC BY ENTRY ECUAC'
(0000835)  ACLSEAD  DC    AL3(*-ACUSER)
```

CHART TITLE - CONSTANTS AND STORAGE AREAS

```
(000836)  FILMSG   DC    C'DISK FILE ERROR'
(000837)  FILML    DC    AL3(*-FILMSG)
(000838)  HNK      DC    C'HOST NOT KNOWN'
(000839)  HNKL     DC    AL3(*-HNK)
(000840)  NFS      DC    C'INSUFFICIENT FREE STORE'
(000841)  NFSL     DC    AL3(*-NFS)
(000842)  AWEC     DC    C'ECHO REPLY ACCEPTED'
(000843)  AWECL    DC       (*-AWEC)
(000844)  BADECO   DC    C'ECHO FAILED'
(000845)  BADECL   DC    AL3(*-BADECO)
(000846)  GOECO    DC    C'ECHO CORRECT'
(000847)  GOECEND  DC    AL3(*-GOECO)
(000848)  NAME     DC    CL8'NAME'      NAME OF HOST
(000850)           DC    CL2'  '
(000851)  STAT1    DC    CL8'STATE'     STATE OF FIRST HOST
(000852)           DC    CL2'  '
(000853)  STAT2    DC    CL8'STATE'     STATE OF SECOND HOST
(000854)           DC    CL2'  '
(000855)  STAT3    DC    CL8'STATE'     STATE OF THIRD HOST
(000856)  NAMEND   DC    AL2(*-NAME)
(000857)  TYPEIT   DC    CL8'TYPEIT'
(000858)           DC    AL1(1)
(000860)  MESS     DC    AL3(*-*)
(000861)           DC    C'K'
(000862)  LENG     DC    AL3(*-*)
(000864)  WRE      DC    CL8'WAITRD'
(000865)           DC    AL1(1)
(000866)           DC    AL3(INPUT)
(000867)           DC    C'U'
(000868)  BYTE     DC    AL3(*-*)
(000871)  FILLIST  DC    CL8'WRRUE'
(000872)  FILNAM   DC    CL8'DEFALT'
(000873)  FILTYP   DC    CL8'RV'
(000874)           DC    CL2'PI'
(000875)           DC    H'0'
(000876)  FILADD   DC    AL4(*-*)
(000877)           DC    F'106'
(000878)           DC    CL2'F'
(000879)           DC    H'0'
(000880)  FILFLT   DC    CL8'LOCDISK'
(000881)  FENCE    DC    2F'-1'
(000884)  LSERI    DC    2F'0'
(000887)  ALLL     DC    1F'0'
(000888)  SAVE     DC    1F'0'
(000889)  MESSAV   DC    34F'0'
(000890)  LENSAV   DC    1F'0'
(000891)  WRRW     DC    1F'0'
```

CHART TITLE - CONSTANTS AND STORAGE AREAS

```
(000852)  BUFF     DC    CL106' '
(000854)  CHECK    DC    1F'0'
(000857)  BCCLAT   DC    1F'0'
(000858)  INPUT    DC    24F'0'
(000855)  TEMP     DC    1F'0'
(000500)  FCRBEG   DC    1F'0'
(000501)  FCRSIZ   DC    1F'0'
(000505)  TRTAB    DC    C'0123456789ABCDEF'
(000509)  HSTEL    DC    CL8' '                                    JW
(000510)           DC    CL8'UCLA'                                 JW
(000511)           DC    CL8'SRI'                                  JW
(000512)           DC    CL8'UCSB'                                 JW
(000513)           DC    CL8'UTAH'                                 JW
(000514)           DC    CL8'BRN'                                  JW
(000515)           DC    CL8'PIT'                                  JW
(000516)           DC    CL8'RAND'                                 JW
(000517)           DC    CL8'SDC'                                  JW
(000518)           DC    CL8'HARVARD'                              JW
(000519)           DC    CL8'LINCOLN'                              JW
(000520)           DC    CL8'STANFORD'                             JW
(000521)           DC    CL8'ILLIAC'                               JW
(000522)           DC    CL8'CASE'                                 JW
(000523)           DC    CL8'CARNEGIE'                             JW
(000524)           DC    CL8'PACLT'                                JW
(000525)           DC    CL8'APES'                                 JW
(000526)           DC    CL8'MITRE'                                JW
(000527)           DC    CL8'RADC'                                 JW
(000528)           DC    CL8'ABS'                                  JW
(000529)           DC    CL8'ETAC'                                 JW
(000530)           DC    CL8'TINKER'                               JW
(000531)           DC    CL8'MCLELLAN'                             JW
(000532)           DC    CL8'USC'                                  JW
(000533)           DC    CL8'GWC'                                  JW
(000534)           DC    CL8'ACAR'                                 JW
(000535)           DC    CL8' '          DUMMY                     JW
(000536)           DC    CL8' '          DUMMY                     JW
(000537)           DC    CL8' '          DUMMY                     JW
(000538)           DC    CL8' '          DUMMY                     JW
(000539)           DC    CL8'RAN/TIE'                              JW
(000540)           DC    CL8' '          DUMMY                     JW
```

CHART TITLE - 'LCGGER CCNTRCL RCUTINE'

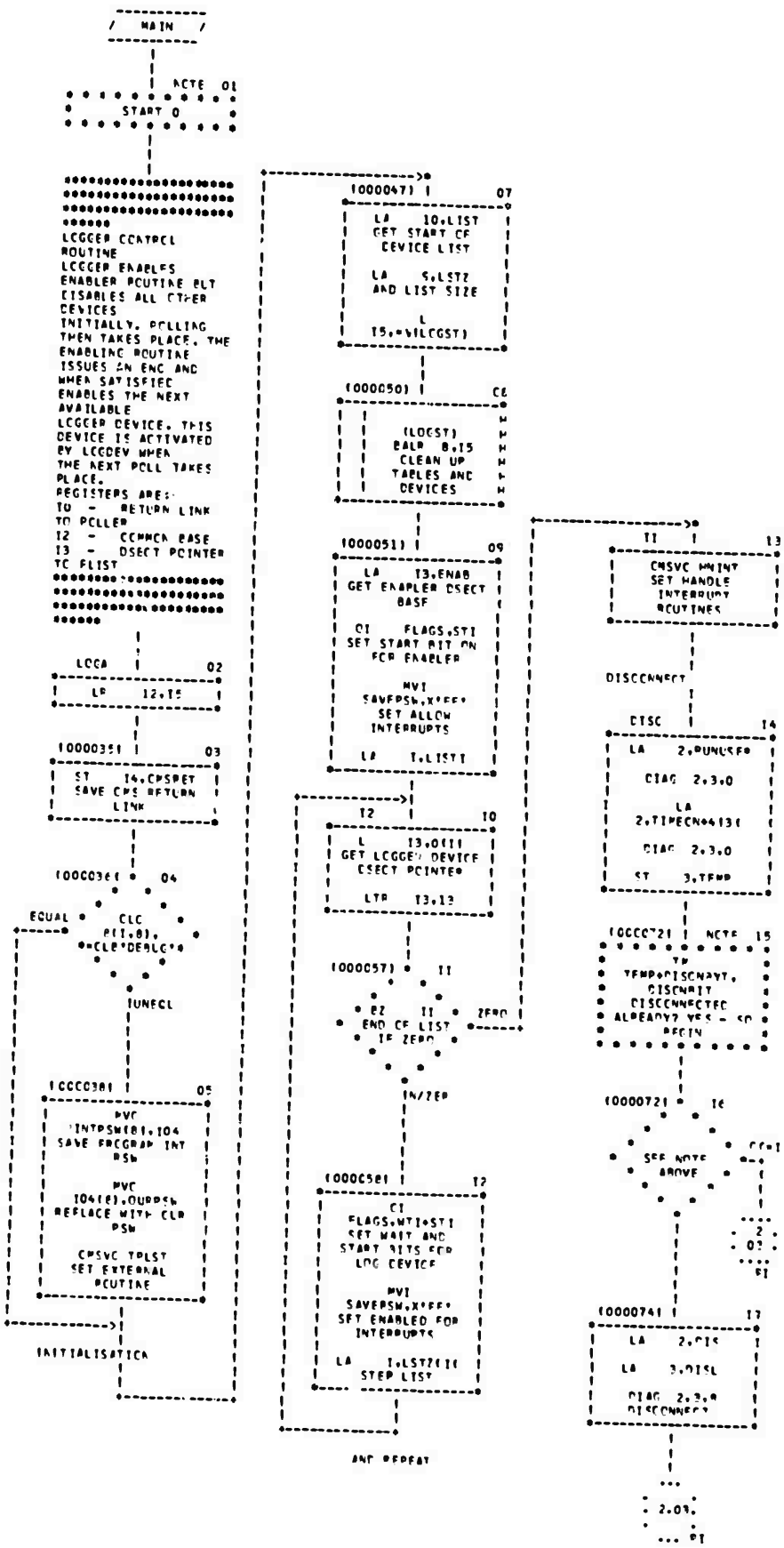

CHART TITLE - 'LOGGER CONTROL ROUTINE'

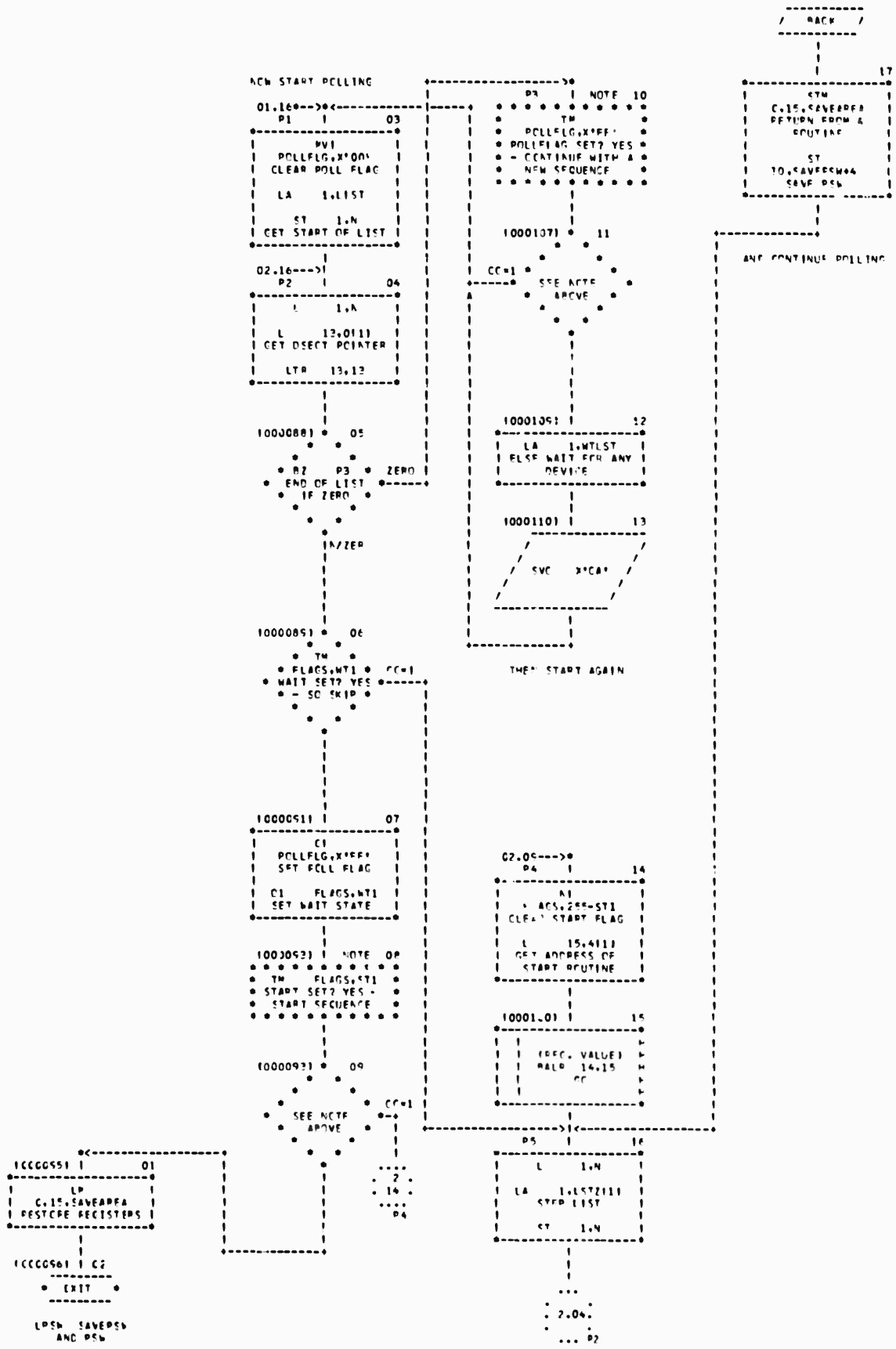

CHART TITLE - 'LCGGER CONTROL ROUTINE'

ENABLING ROUTINE

```
 05.109-->*
   ENA     |          01
*---------------------*
|        MVC          |
| FLAGS+1(3),FZERCS   |
| CLEAR MOST OF THE   |
|       FLAGS         |
|                     |
|        MVC          |
| RETRY(4),RETRYCNT   |
|  SET RETRY COUNT    |
|                     |
|        NI           |
|   FLAGS,255-TM1     |
| CLEAR STACK FLAG    |
|                     |
|        MVC          |
|  MHCM(4),LIST+8     |
|   SET MY SOCKET     |
*---------------------*
          |
          |
 (000125) |          02
*---------------------*
| CI    MTAG,X'01'    |
|  SET AS OUR SEND    |
|                     |
|     ISSUE ENC       |
|   ISSUE ENABLE      |
|      COMMFCT        |
*---------------------*
          |
          |
 (000127) |  NOTE  03
* * * * * * * * * * *
* TEST  1,ENP,ERRA   *
* * * * * * * * * * *
          |
          |
 (000128) |          04
*---------------------*
|     INTSTACK        |
|   GET THE STACK     |
*---------------------*
          |
 04.059-->|
   ENC    |          05
*---------------------*
|      ANALYSE        |
| AND ANALYSE IT      |
*---------------------*
          |
          |
 (000130) |  NOTE  06
* * * * * * * * * * *
*        TM         *
*     FLAGS+2,      *
*  LISS+RLES+CLSS+  *
*     ENLS+NCPS     *
*    UNEXPECTED     *
*    INTERRUPTS     *
* * * * * * * * * * *
          |
          |
          |
 (000130) *   07
        *   *
      *       *
    *           *  CC=7
  *   SEE NOTE    *--*
    *   ABOVE   *    |
      *       *      |
        *   *        |
          *          |
          |        ....
          |        . 18 .
          |        . 07 .
          |        ....
          |        ERRA
          |
          |
          |  /
        -----
       / 4.06
```

CHART TITLE - 'LOGGER CONTROL ROUTINE'

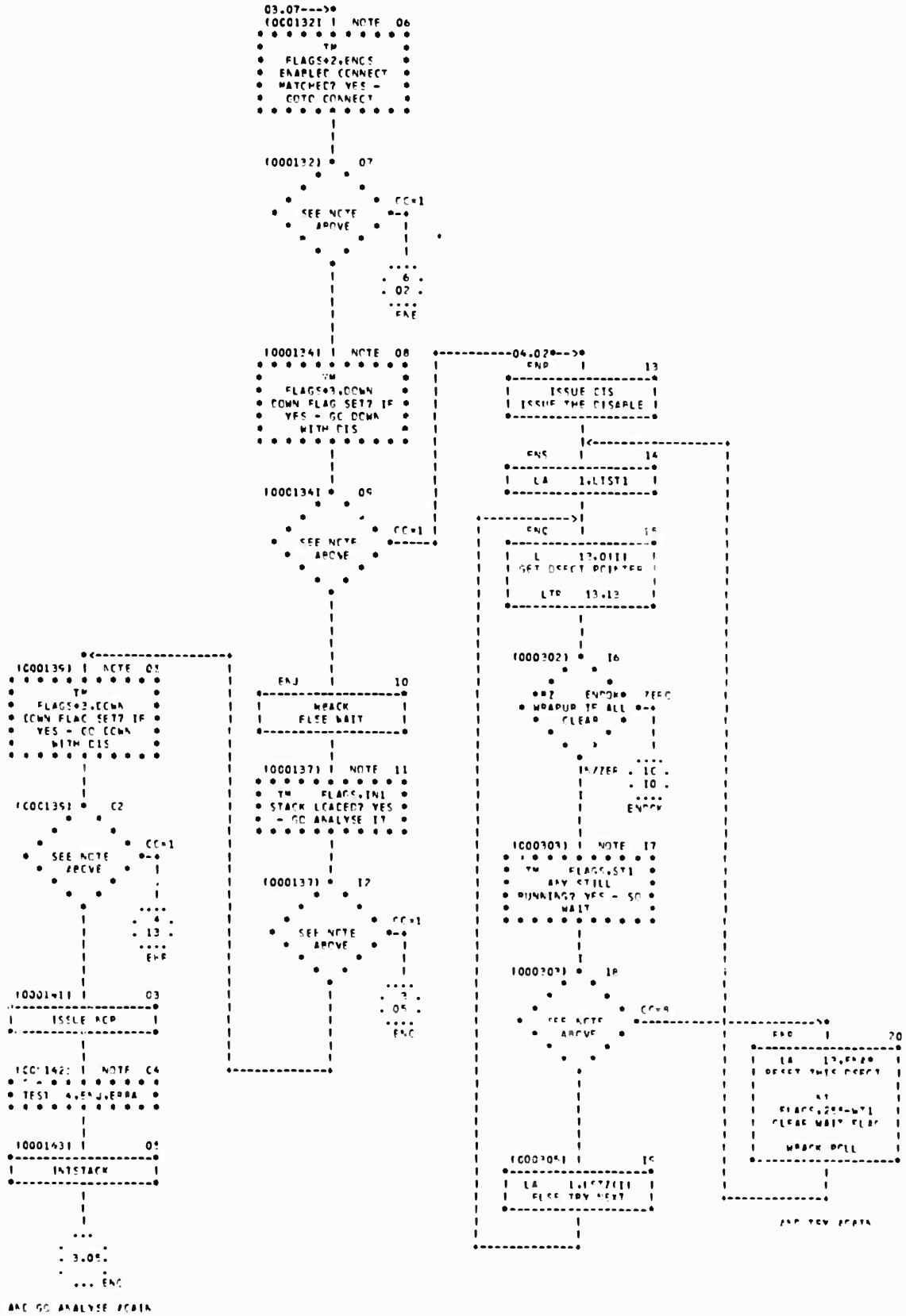

CHART TITLE - 'LOGGER CONTROL ROUTINE'

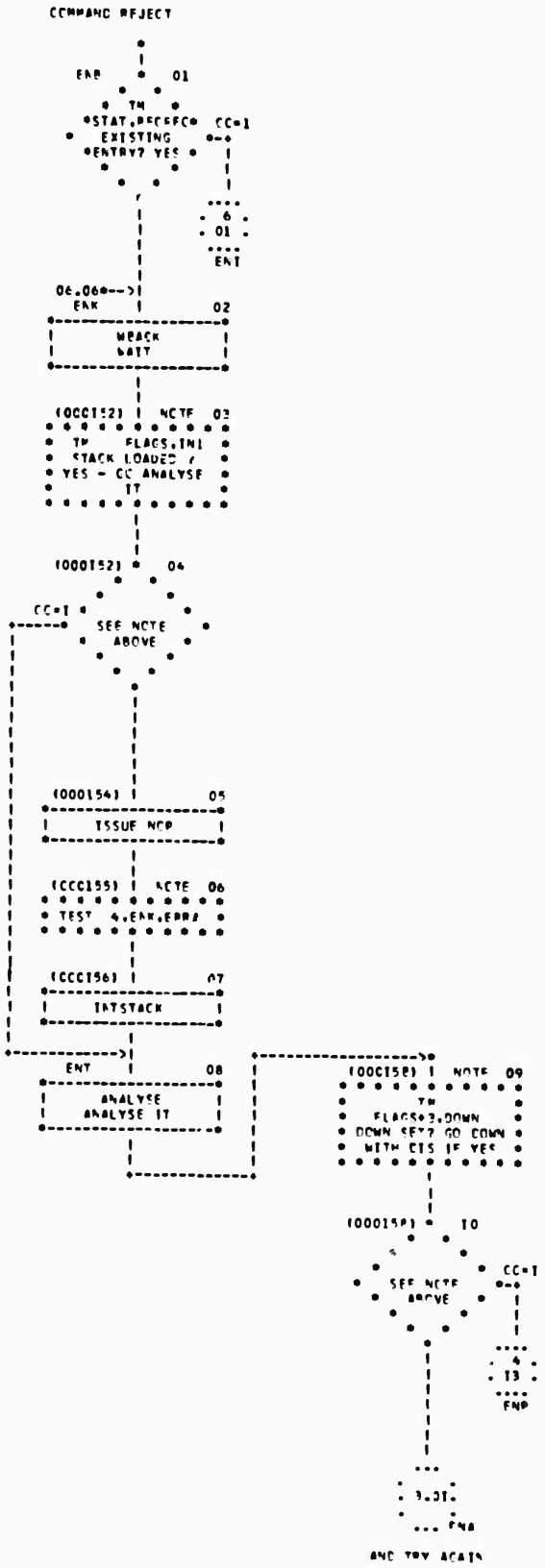

CHART TITLE - 'LCCGER CONTROL ROUTINE'

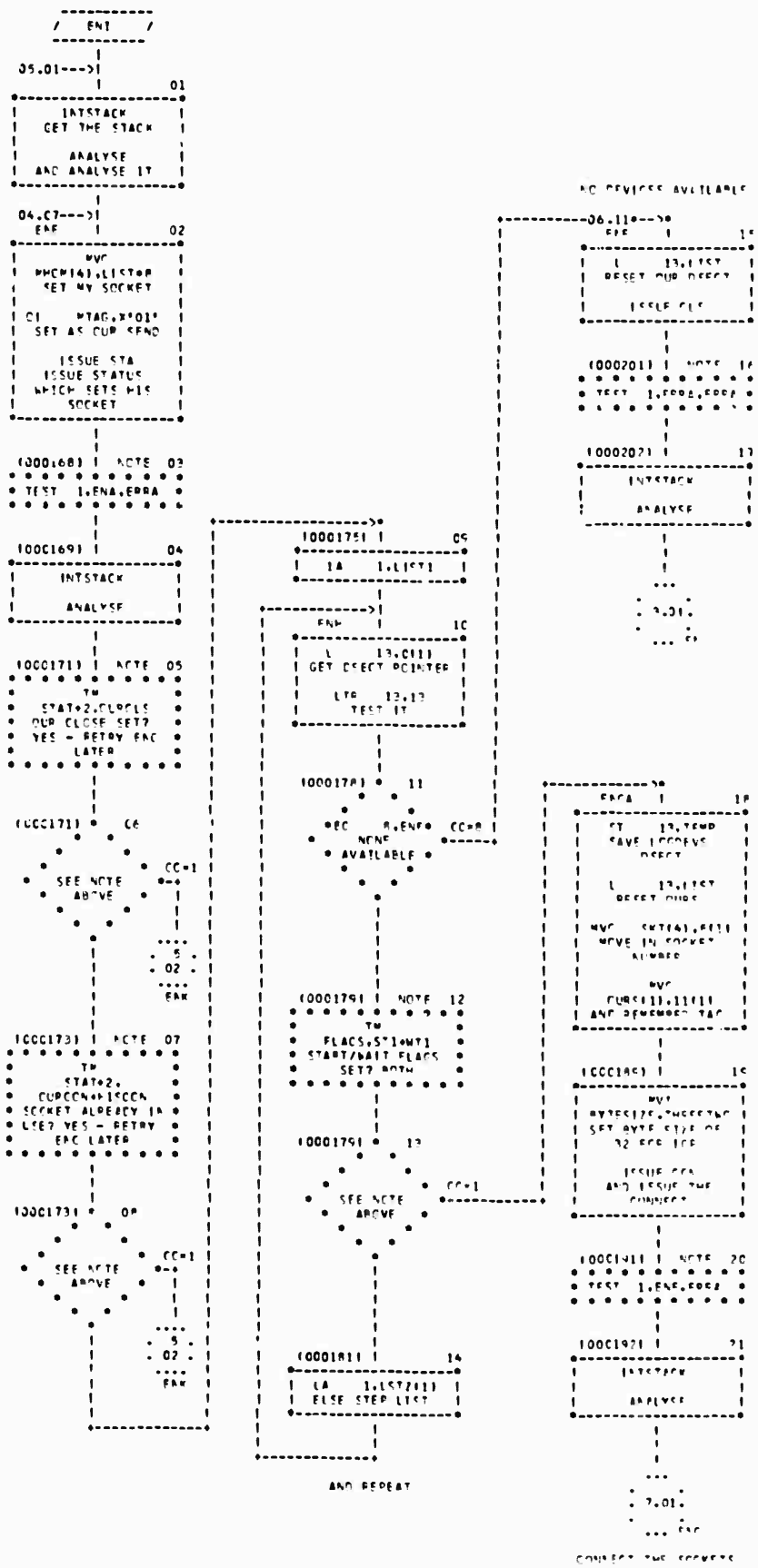

CHART TITLE - 'LOGGER CONTROL ROUTINE'

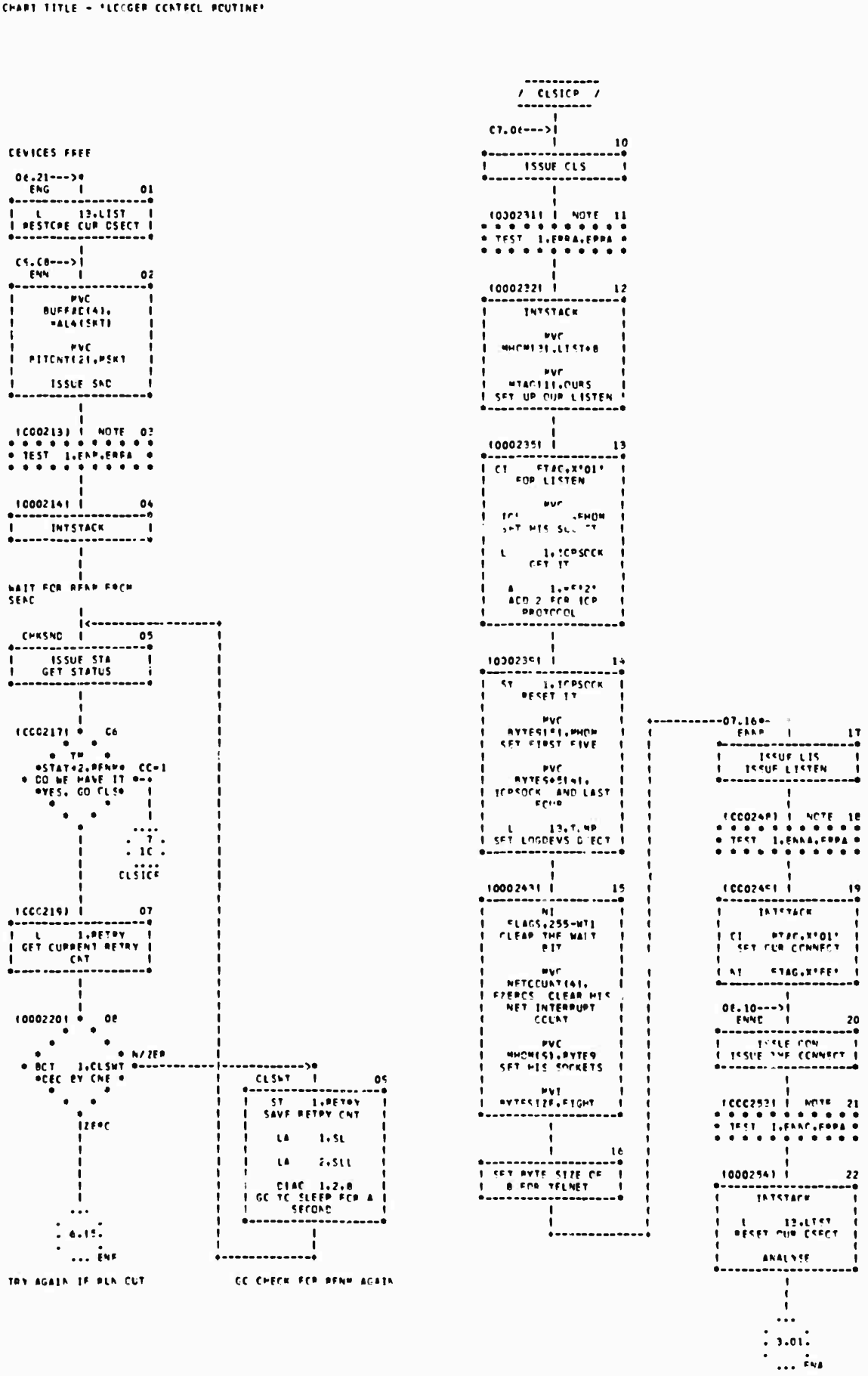

CHART TITLE - 'LCCGER CCNTRCL RCUTINE'

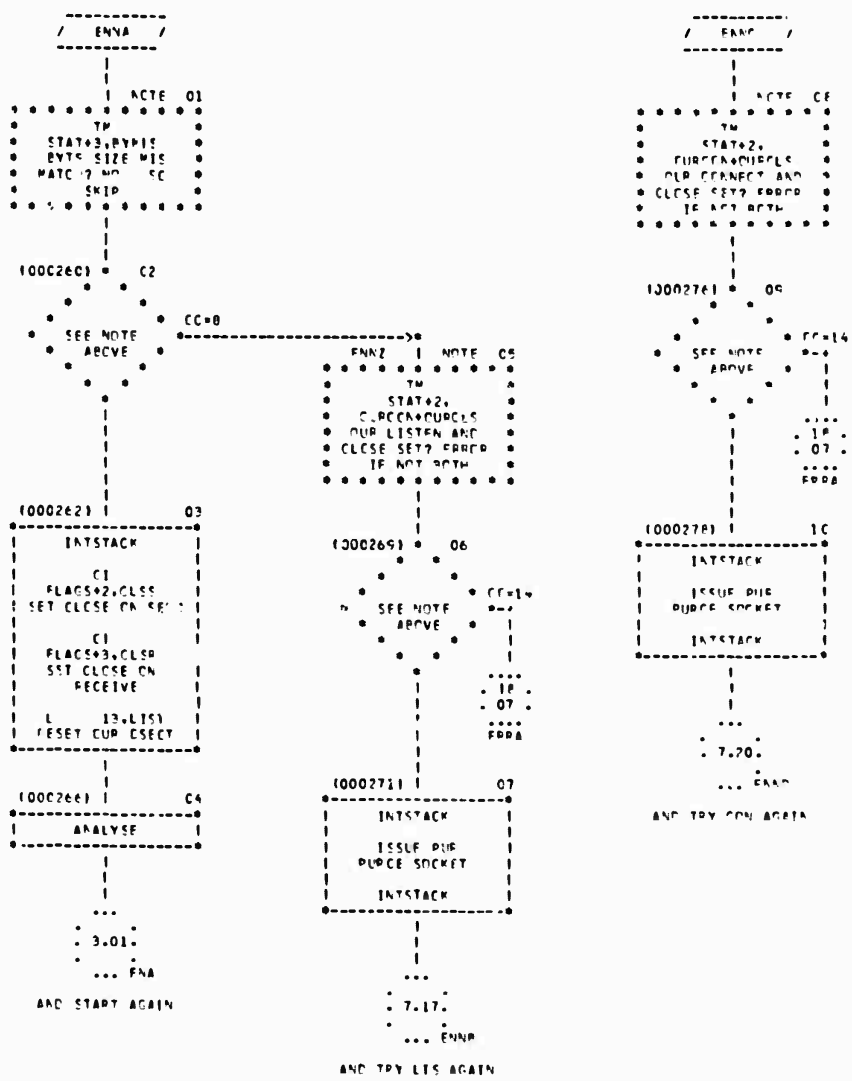

CHART TITLE - 'LOGGER CONTROL ROUTINE'

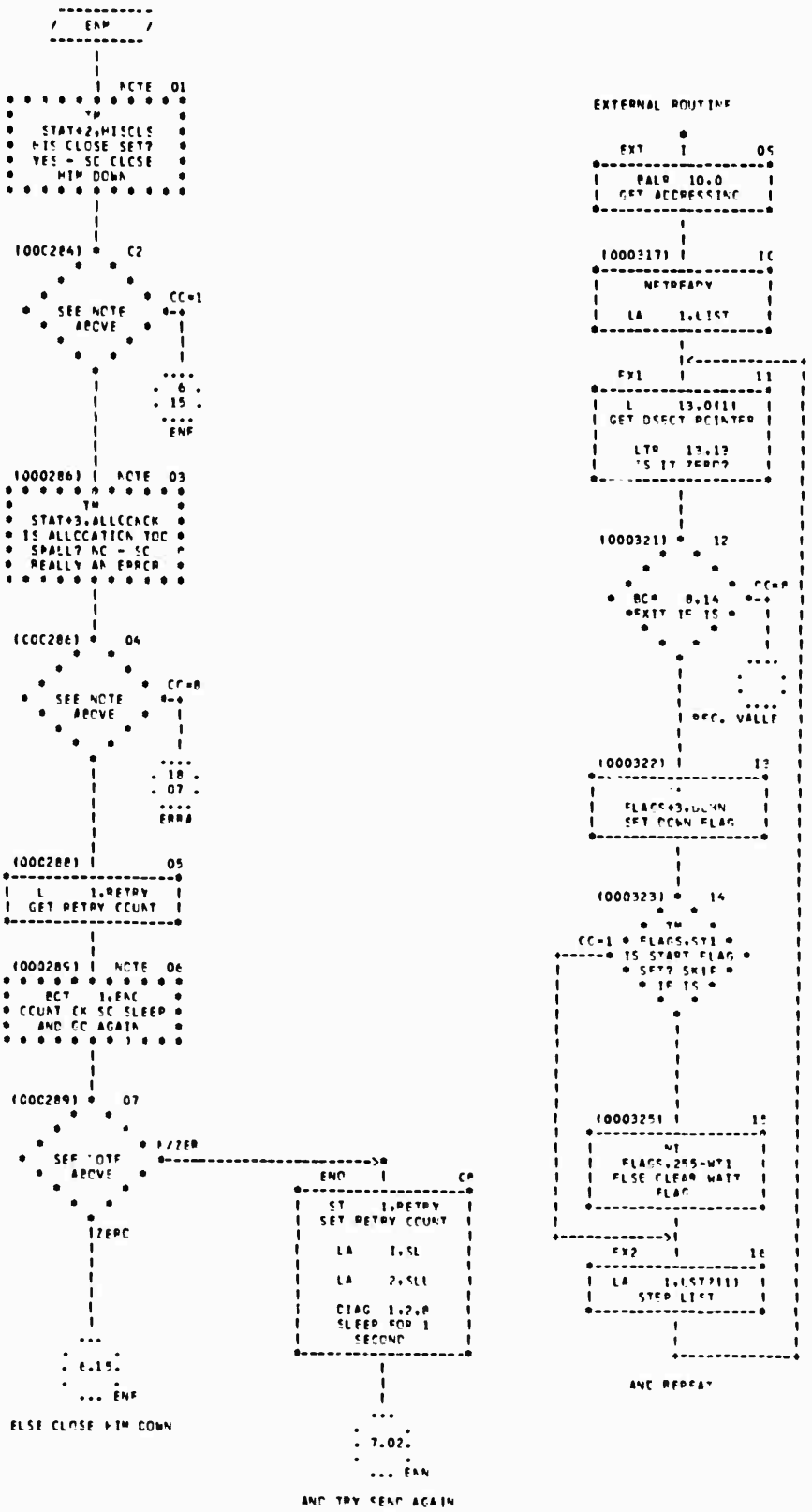

CHART TITLE - 'LCCGER CCNTRCL ROUTINE'

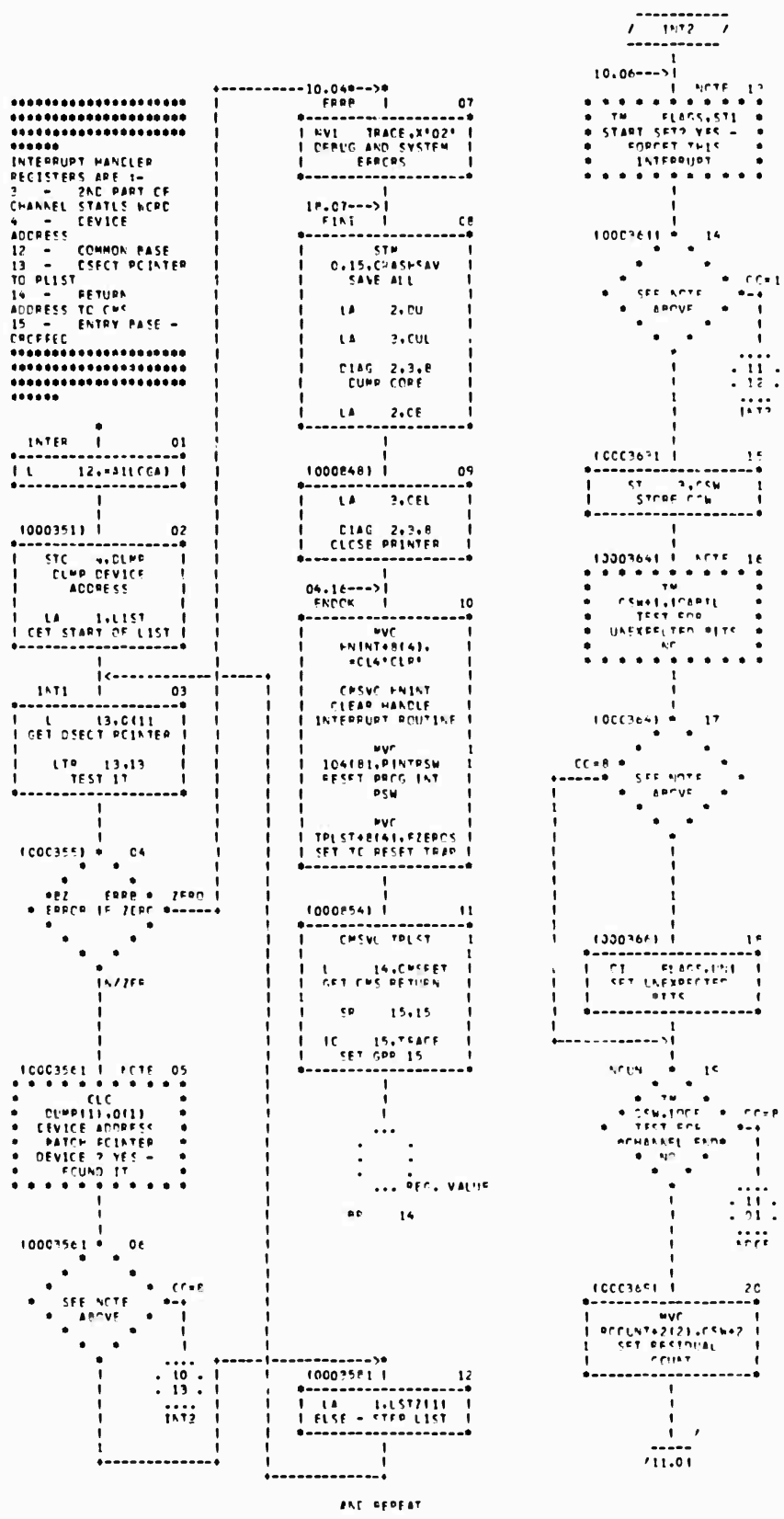

CHART TITLE - 'LOGGER CONTROL ROUTINE'

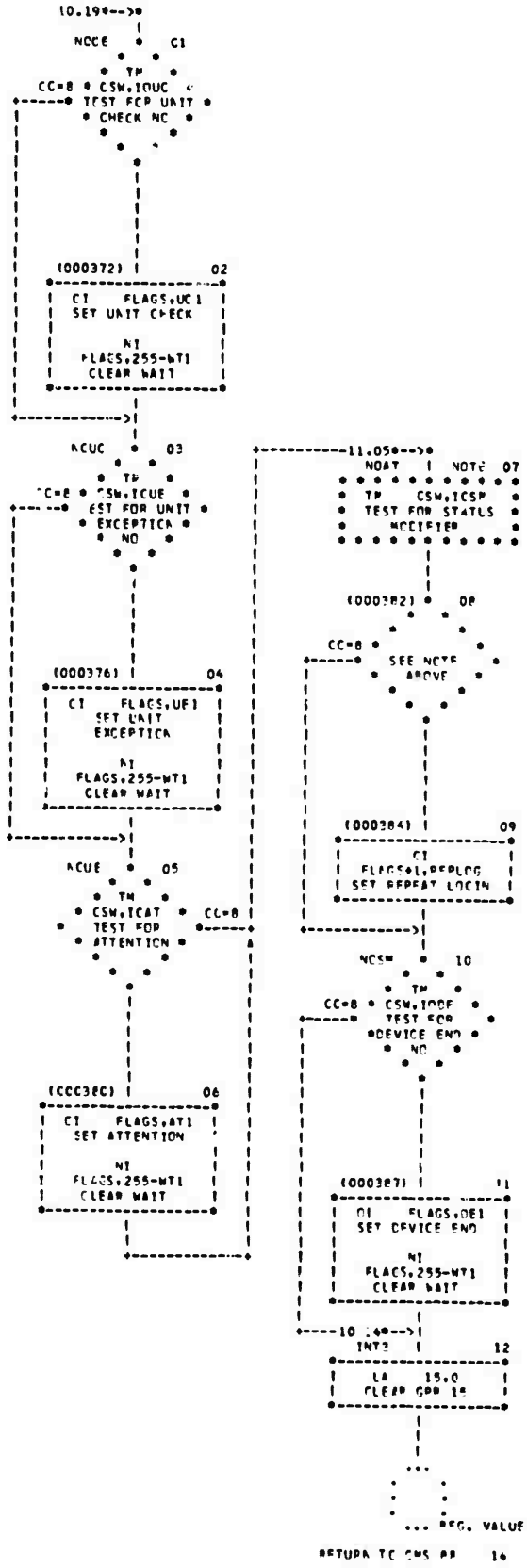

CHART TITLE - 'LCCGER CCNTRCL RCUTINE'

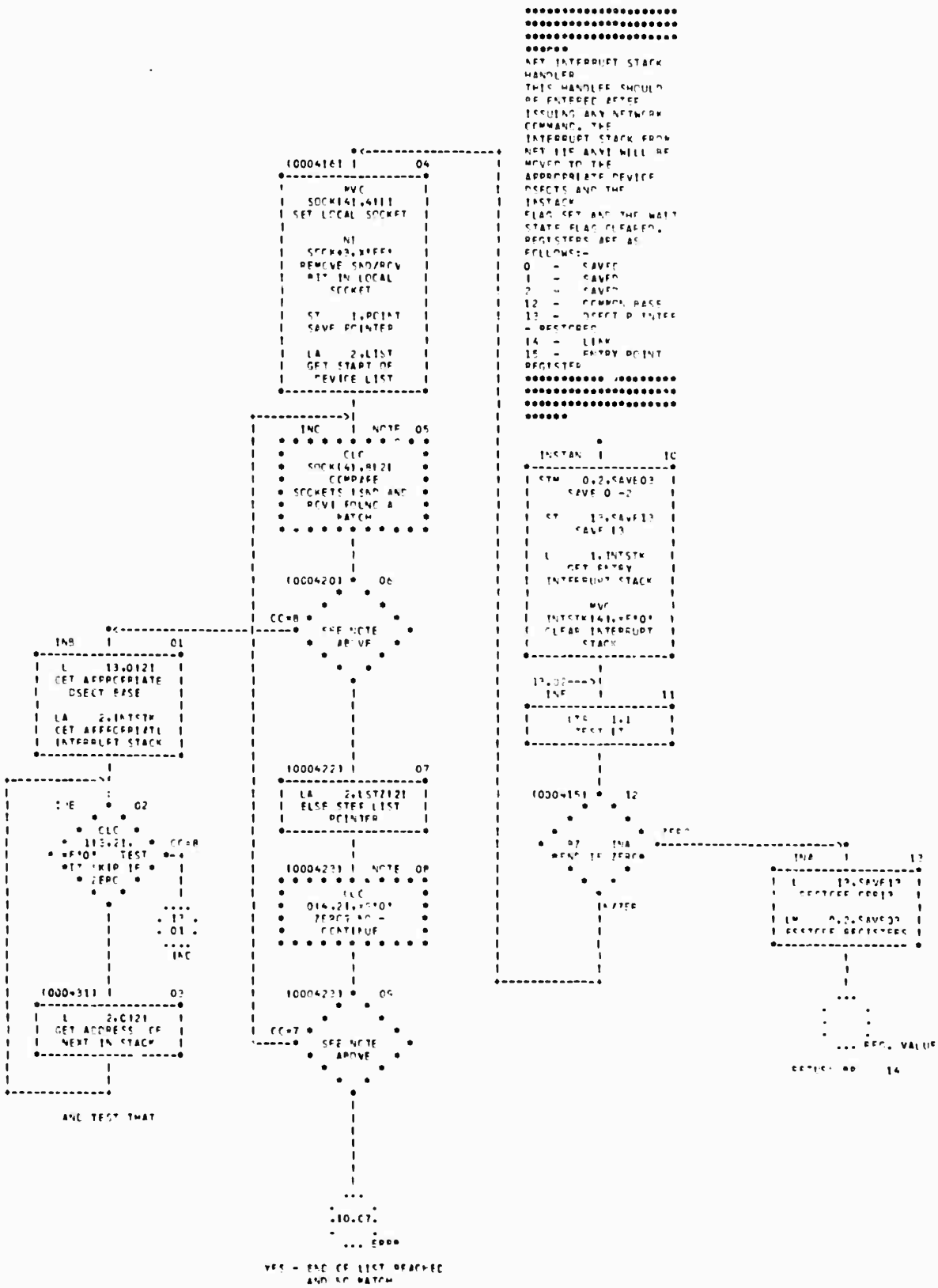

CHART TITLE - 'LCGGER CONTROL ROUTINE'

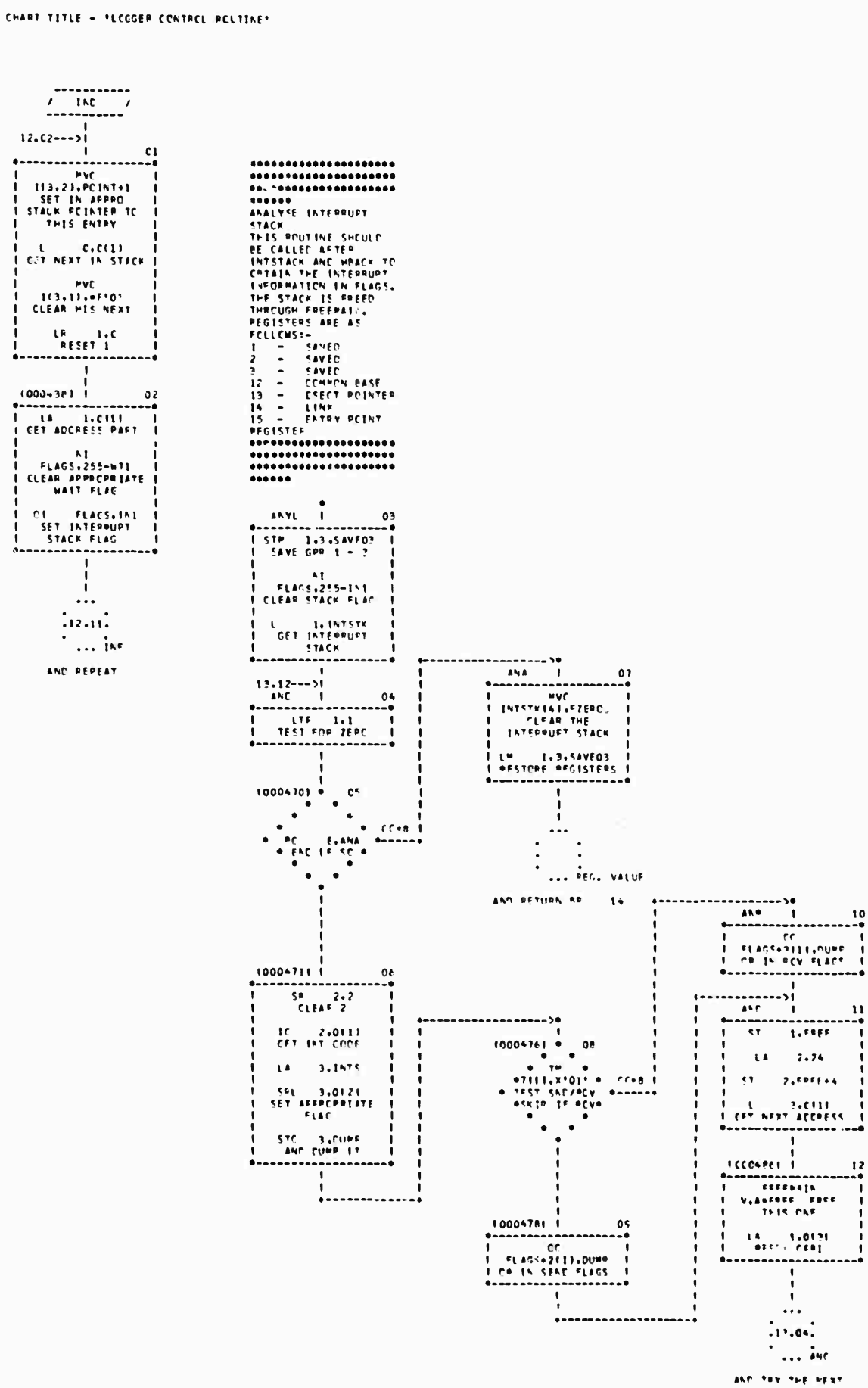

CHART TITLE - 'LOGGER CONTROL ROUTINE'

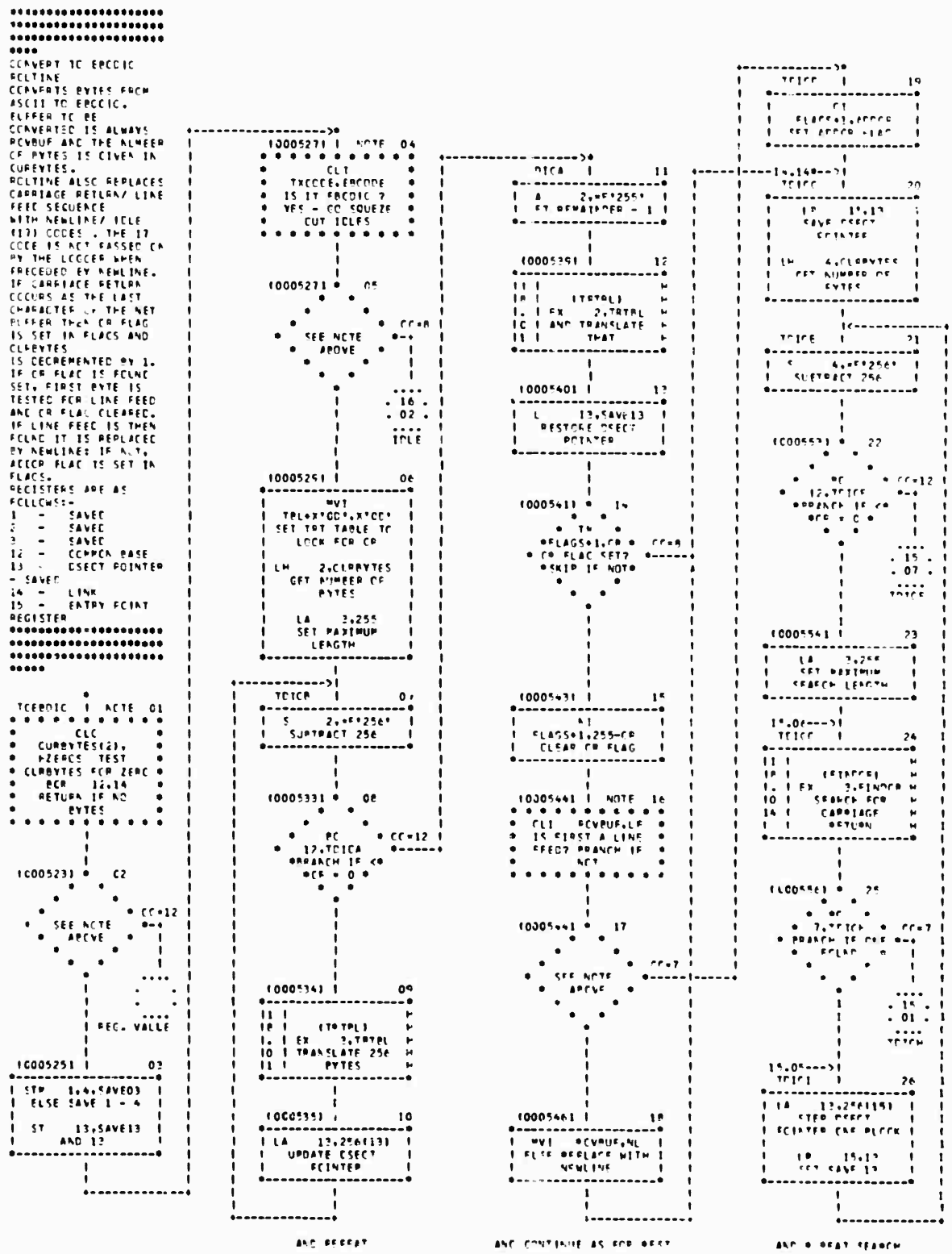

CHART TITLE - 'LOGGER CONTROL ROUTINE'

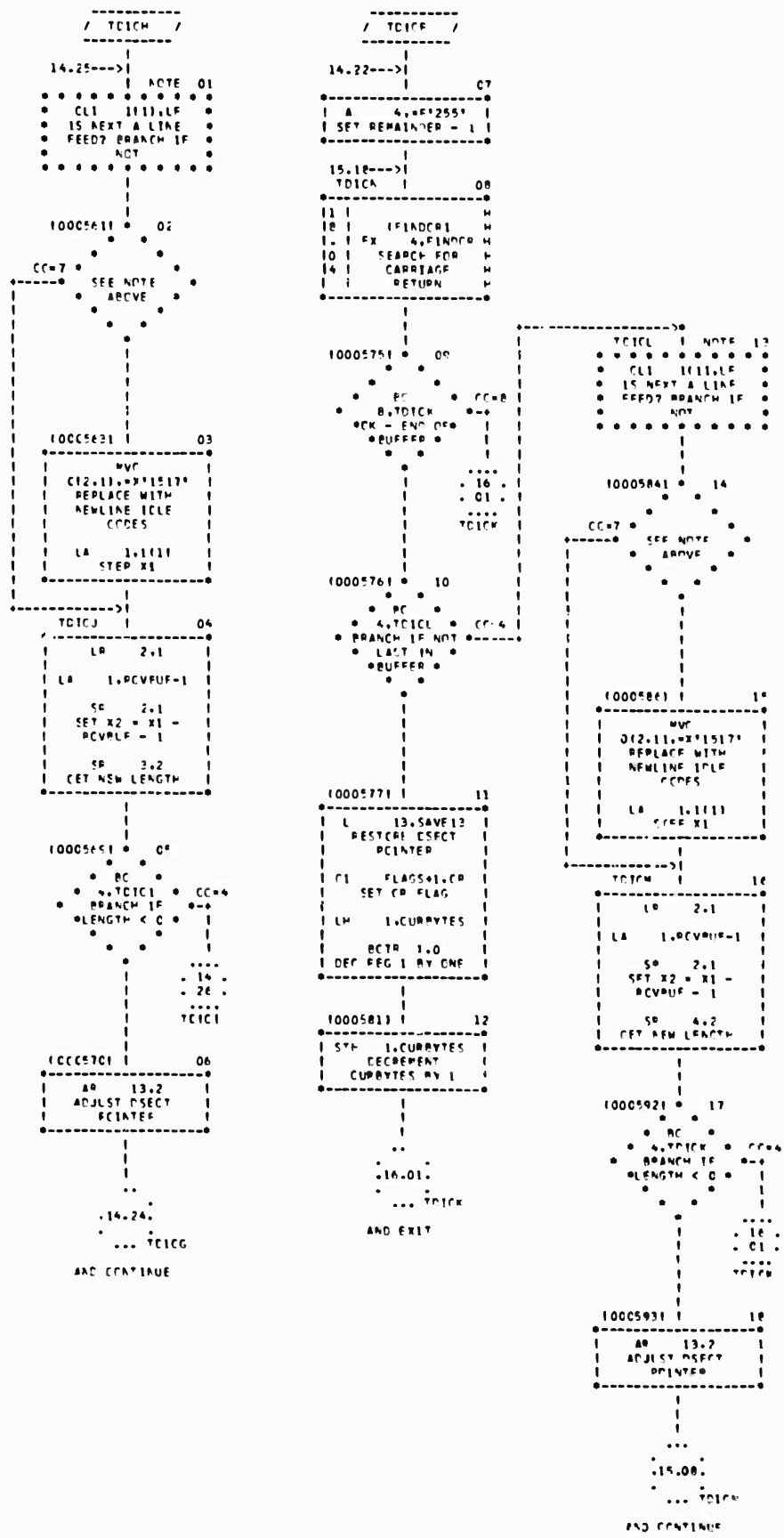

CHART TITLE - 'LOGGER CONTROL ROUTINE'

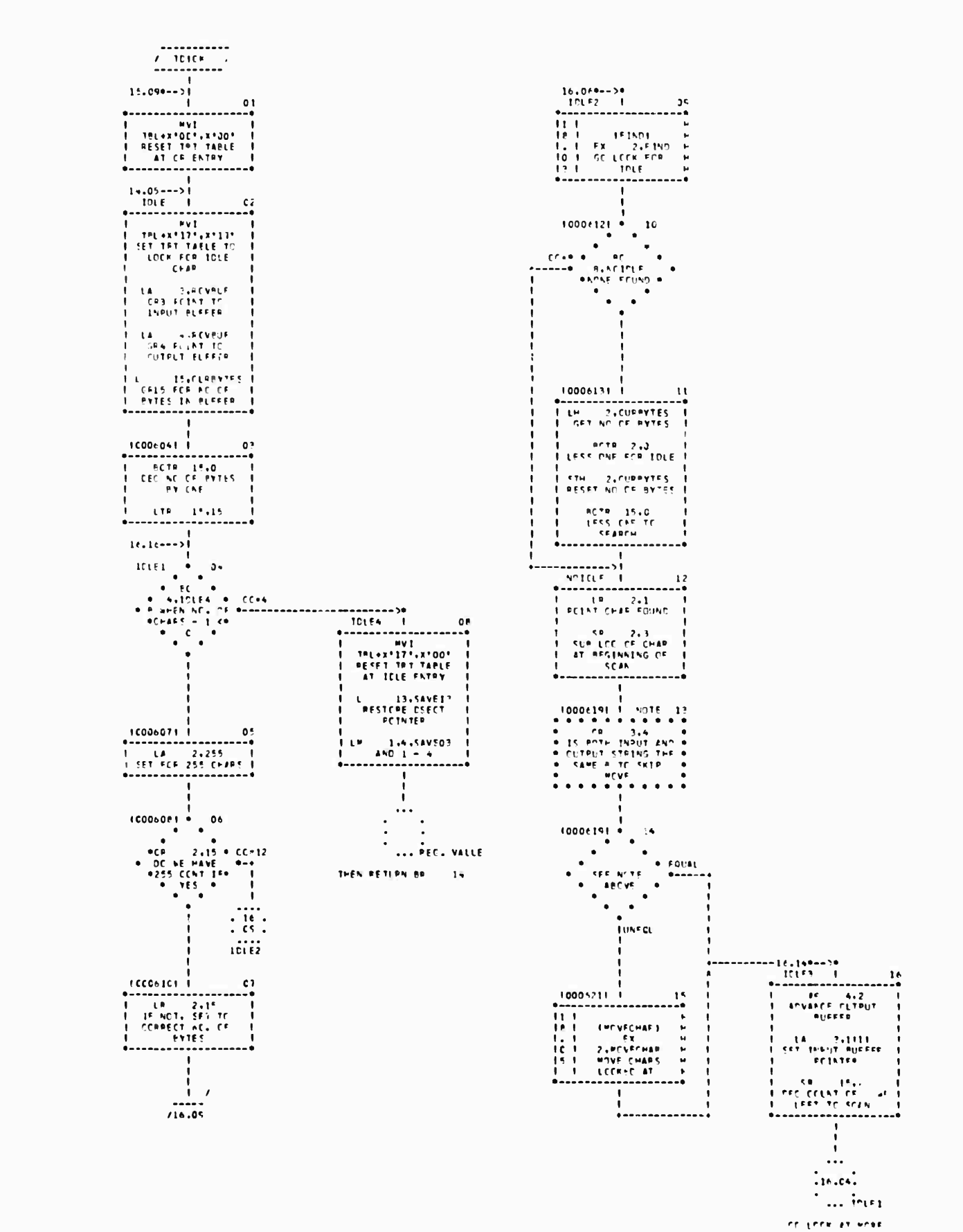

CHART TITLE - 'LOGGER CONTROL ROUTINE'

```
**********************
**********************
**********************
*****
CONVERT FROM EBCDIC
ROUTINE
CONVERTS BYTES FROM
EBCDIC TO ASCII.
BUFFER TO BE
CONVERTED IS ALWAYS
CPBUFR AND THE NUMBER
OF BYTES TO BE
TRANSLATED IS ALWAYS
132.
ROUTINE ALSO REPLACES
NEWLINE CODE FIRST
WITH X'FF', AND THEN
WITH CARRIAGE RETURN
AND LINE FEED CODES
AND ADJUSTS BITCNT
ACCORDINGLY.
REGISTERS ARE AS
FOLLOWS:-
1  -   ADDRESS OF
NEWLINE CODE IN TRT
INSTRUCTION
2  -   LENGTH TO BE
MOVED FROM CP TO TEMP
BUFFERS
3  -   CP BUFFER
POINTER
4  -   TEMPORARY
BUFFER POINTER
12 -   COMMON BASE
13 -   DSECT POINTER
- SAVED
14 -   LINK
15 -   ENTRY
REGISTER 2 LENGTH TO
BE TESTED BY TRT
**********************
**********************
**********************
*****
```

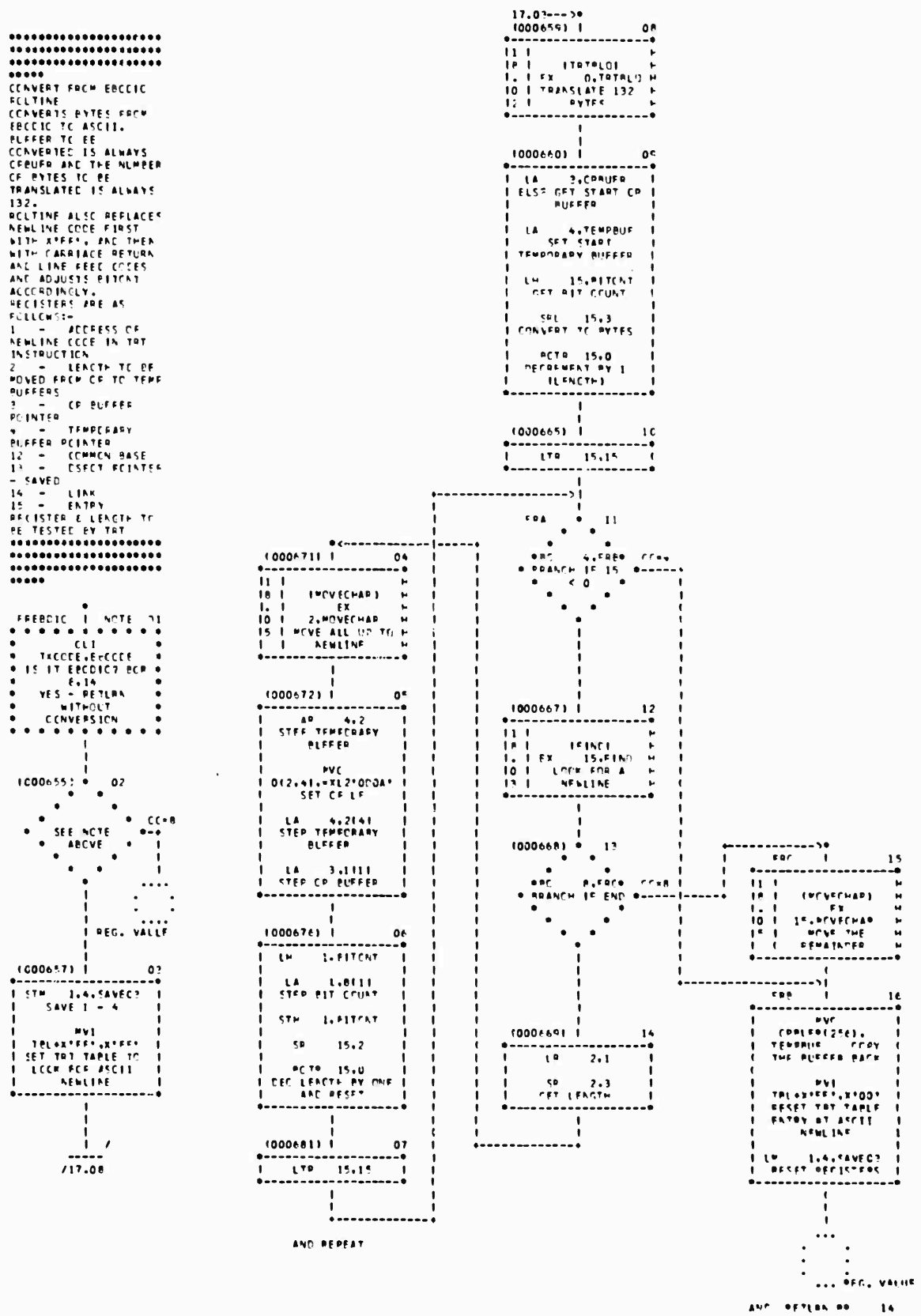

CHART TITLE - 'LCCCER CCNTRCL RCUTINE'

```
TABLES                                  CRASH

 14.054-->?                                      *
  TRTBL   |        01                    CRASH   |        08
*----------------------*                *----------------------*
|        TR            |                |    BALR  12,0        |
| RCVBLE(C),ASCIII     |                |  GET ADDRESSIAG      |
|  TRANSLATE FROM      |                *----------------------*
|       ASCII          |                          |
*----------------------*                          |
          |                             (0000864) |        C9
          |                             *----------------------*
          |                             | L     12,=A(LCCAI    |
          |                             *----------------------*
0 1 2 3 4 5 6 7 8 9 A                             |
B C D E F                                         |
NCTE:  NOP (E2) =                                 |
ICLE (17)                                        ...
ECHO (E4) = IDLE (17)                           .   .
ECHO SHOULD BE                                  .10.07.
DETECTED AND ACKECHO                            .   .
SENT                                              ... ERRR
          |
 17.C8--->|
  TRTBLC  |        02
*----------------------*
|        TR            |
|   (PBUFR(132),       |
| ASCIIC  TRANSLATE    |
|      TC ASCII        |
*----------------------*
          |
          |
          |
0 1 2 3 4 5 6 7 8 9 A                       -----------
B C D E F                                  / (C008701 /
NCTE: NL '1F' = ASCII                       -----------
NEWLINE IF ' ' - USED                             |
BY TBL                                            |
MARK (BD) = NCP (E2)                              |
- SC AS NCT TC                                    |
CCNFLSE A USER                                    |        10
          |                             *----------------------*
 16.059-->|                             |      LOGNET          |
   FIND   |        03                   *----------------------*
*----------------------*                          |
| TRT   010,31,TBL     |                          |
|   TRANSLATE AND      |                (0008721) |        11
|  TEST FOR ASCII      |                *----------------------*
|      NEWLINE         |                |      CPMACRC         |
*----------------------*                *----------------------*
          |                                         |
 14.249-->|                                         |
  FINCCR  |        04                               |
*----------------------*                CSECT BUFFERS
|        TRT           |                          |
|   RCVBUF(0),TBL      |                          |
|   TRANSLATE AND      |                (0008861) |        12
|  TEST FCR SPECIC     |                *----------------------*
|        CR            |                |      ICINEC          |
*----------------------*                |                      |
          |                             |     LCCFLAGS         |
 16.159-->|                             *----------------------*
 MCVECHAR |        05                             |
*----------------------*                          |
| PVC   010,41,0(2)    |                (0008881) |        13
*----------------------*                *----------------------*
          |                             |        BITS          |
          |                             *----------------------*
          |
VARIABLES
          |
          |
          |
CCNSTANTS
          |
          |
 (0007811) |        06
*----------------------*
|        VCCM          |
*----------------------*
          |
          |
          |
ERRCRS
          |
 03.C79-->|
   ERRA   |        07
*----------------------*
| PVI   TRACE,X'01'    |
|   NCP REJECTION      |
|       ERRCRS         |
*----------------------*
          |
          |
          |
         ...
        .   .
        .1C.CP.
        .   .
          ... FINI
```

CHART TITLE - ECU STATEMENTS

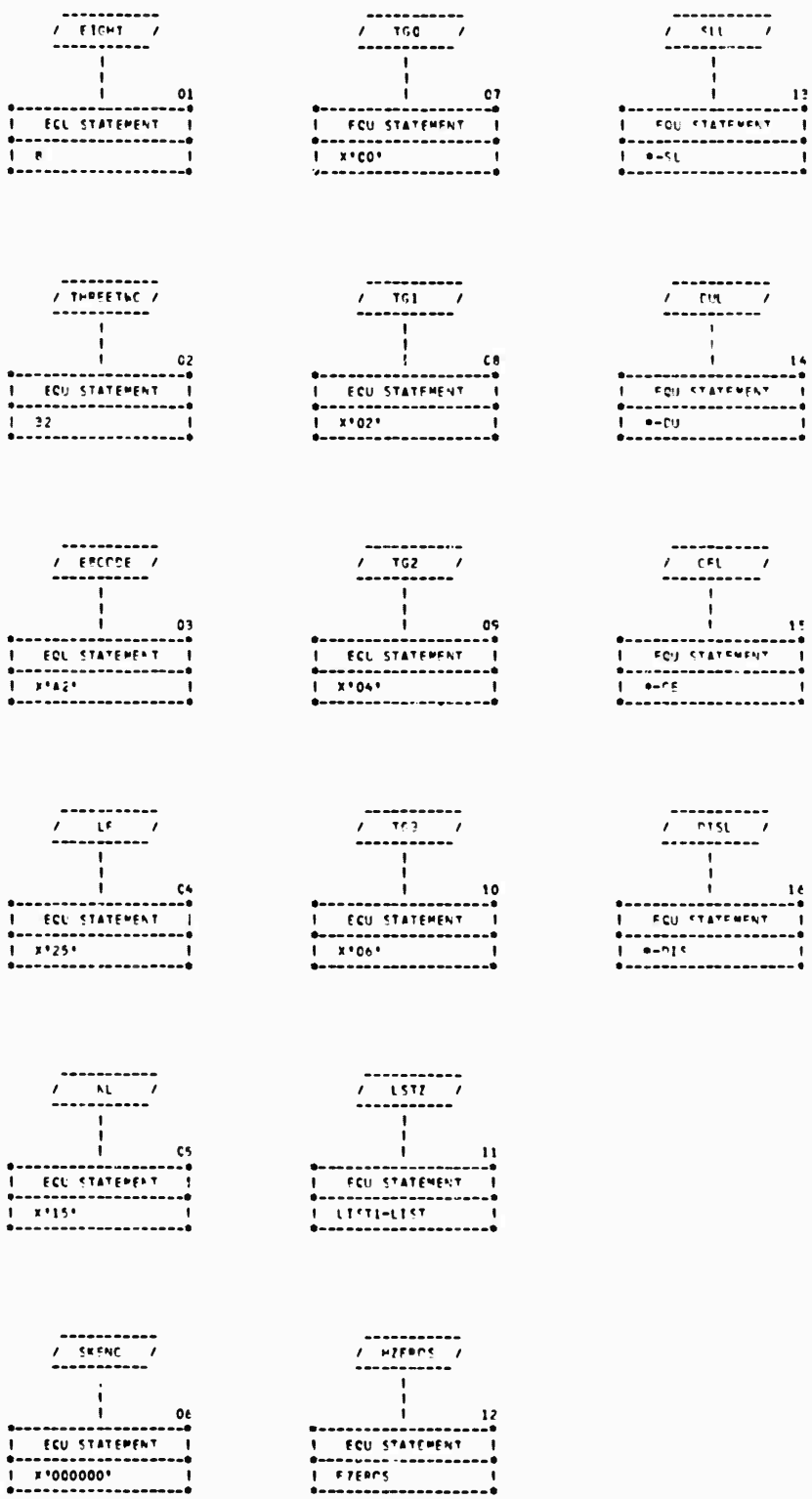

CHART TITLE - CCNSTANTS 2ND STCRACE AREAS

```
(0CC111)          DC    AL4(*-4)
(0C0657)          DC    XL16'000102030372D2E2F1605250P0C0DCEC0F'   0
(0C0651)          DC    XL16'1C1112133C3032261B1B3F271C1C1E1F'     1
(0CC6551)         DC    XL16'4C5A7F7P5E6C5D7C4D5C5C4E6P604P61'     2
(0CC7CC)          DC    XL16'F0F1F2F3F4F5F6F7F8F9F7A5E4C7E6E6F5'   3
(0C0701)          DC    XL16'7CC1C2C3C4C5C6C7C8C9D1D2D3D4D5D6'     4
(0CC7C2)          DC    XL16'D7D8D9E2E3E4E5E6E7E8E9A0A8D7160'      5
(CCC'C3)          DC    XL16'79C1B2B3B4B5B6B7B8B9S1S2S3S4S5S6'     6
(0C0704)          DC    XL16'S7S8S9C4A2A3A4A5A6A7A8A9C8B4C5B5FC7'  7
(CCC7C5)          DC    XL16'B03B171423241717171717171717171717'   8
(0CC7C6)          DC    XL16'1717171717171717171717171717171717'   9
(0000707)         DC    XL16'1717171717171717171717171717171717'   A
(0CC7CB)          DC    XL16'1717171717171717171717171717171717'
(0C0709)          DC    XL16'1717171717171717171717171717171717'
(0C071C)          DC    XL16'1717171717171717171717171717171717'
(CCC711)          DC    XL16'1717171717171717171717171717171717'
(CCC7121          DC    XL16'1717171717171717171717171717171717'   F
(0000722)         DC    XL16'00C1C2C3B2C5B27F8282B2CBCCCDDFDF'     0
(0CC723)          DC    XL16'1C1112133E3FFCE8218158B821C1C1E1F'    1
(CCC724)          DC    XL16'B2B2B2B4B50A171PB2B2B2B2B2B2050607'   2
(0000725)         DC    XL16'B2B21E6E2B2B2C4B1B2B2E21415B21A'      3
(0CC726)          DC    XL16'2CB2B2B2B2B2B2B2B2B25C2E3CB2B27C'     4
(CCC727)          DC    XL16'2EB2B2B2B2B2B2B2B2B2212424B3P7F'      5
(0000728)         DC    XL16'2D2FB2B2B2B2B2B2B2B2B2B22C255F3F3F'   6
(0000729)         DC    XL16'E25FB2B2B2B2B2B2B2B2B2C3B2340273P22'  7
(CCC73C)          DC    XL16'B2616263646566676869B27FB2B2B2B2B2'   8
(0C0731)          DC    XL16'B2B4B5B6C6D6E6F7C7172B27DB2B2B2B2'    9
(0000732)         DC    XL16'B2B2737475767778797AB2B2B25PB2B2'     A
(0CC733)          DC    XL16'B2B2B2B2B2B2B2B2B2B2B2B2B25CB2B2'
(0000734)         DC    XL16'B2414 434445464748495B2B2B2B2B2B2'
(0000735)         DC    XL16'B24A4B4C4D4E4F5C5152B2B2B2B2B2B2'
(0CC736)          DC    XL16'B2B2535455565758595AB2B2B2B2B2B2'
(0000737)         DC    XL16'3031323334353637383PB5B2B2B2B2B2B2'   F
(0000746)         DC    .'6X'CC'
(0CC751)  CMSRET  DS    1
(0000752)  A      DS    1F
(0000753)  FOLLFLC DC   1F'C'
(0CC754)  CSW     DS    1F
(0000755)  CUPS   DS    1F
(0000761  SAVEC2  DS    4F
(0CC7571  SAVE12  DS    F
(0CC75E)  POINT   DS    F
(0CC755)  FREE    DS    1C
(CCC76C)  TEMP    DS    1F
(0000761)  SCCK   DS    1F
(0CC7621  ICPSCCK DS    1F
(CCC763)  TRACE   DC    1F'0'
```

CHART TITLE - CONSTANTS AND STORAGE AREAS

```
(000764)  CRASHSAV DS    16F
(000765)  RETRY    DS    1F
(000766)  RETRYCNT DC    F'5'
(000767)  TEMPBLF  DS    64F
(000773)  PAINT    DC    CL8'PACINT'    PANCLE INTERRUPT ROUTINE
(000774)           DC    CL4'SET'
(000775)           DC    CL4'VCCM',AL4(INTER),XL2'005C',CL2'AK'
(000776)           DC    CL4'LCC1',AL4(INTER),XL2'0044',CL2'AK'
(000777)           DC    CL4'LCG2',AL4(INTER),XL2'0045',CL2'AK'
(000778)           DC    CL4'LCG3',AL4(INTER),XL2'0046',CL2'AK'
(000779)           DC    F'-1'
(000784)  WTLST    DC    CL8'WAIT'
(000785)           DC    CL4'RDR1'
(000786)           DC    CL4'LCC1'
(000787)           DC    CL4'LCG2'
(000788)           DC    CL4'LCG3'
(000789)           DC    1F'0'
(00078C)  INTCEV   DC    1F'C'
(000792)  TPLST    DC    CL8'TRAP'
(000792)           DC    A(EXT)
(000806)  LIST     DC    XL1'0C',AL3(ENAB),V(ENA),AL3(SKENC),AL1(TG0)
(00080C)  LIST1    DC    XL1'44',AL3(LCC1),V(LCGDEV),AL3(SKENC),AL1(TG1)
(000812)           DC    XL1'45',AL3(LCC2),V(LCGDEV),AL3(SKENC),AL1(TG2)
(000818)           DC    XL1'46',AL3(LCC3),V(LCGDEV),AL3(SKENC),AL1(TG3)
(000833)  FZERCS   DC    1F'C'
(000815)  SKT      DC    1F'0'
(000816)  PSKT     DC    AL2((*-SKT)*8)
(000817)  CURS     DC    XL1'CC'
(00081E)  BYTES    DS    3F
(000821)  CURFSW   DC    XL4'01040000'
(000822)           DC    AL4(CRASH)
(000824)  PINTPSW  DS    1D
(000826)  SL       DC    C'SL 1'
(000828)  CU       DC    C'DU 12000-30000'
(00082C)  CE       DC    C'C E'
(000832)  CIS      DC    C'CISC HOLC'
(000878)  ENAB     DC    (SIZA)F'C'
(00088C)  LCG1     DC    (SIZB)F'0'
(000882)  LCG2     DC    (SIZB)F'0'
(000884)  LCG3     DC    (SIZB)F'C'
```

CHART TITLE - 'LOGGER DEVICE CONTROL ROUTINE'

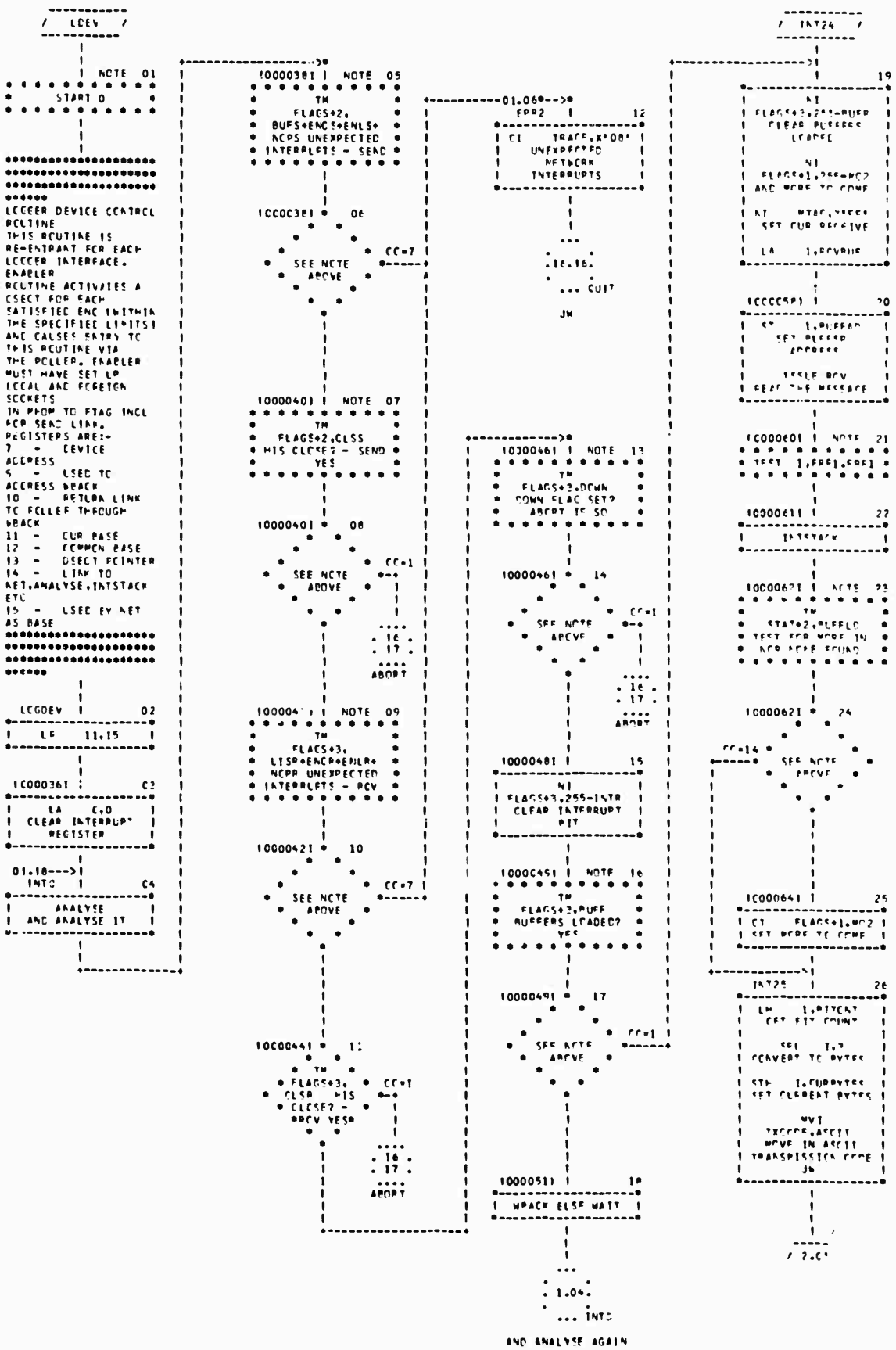

CHART TITLE - 'LOGGER DEVICE CONTROL ROUTINE'

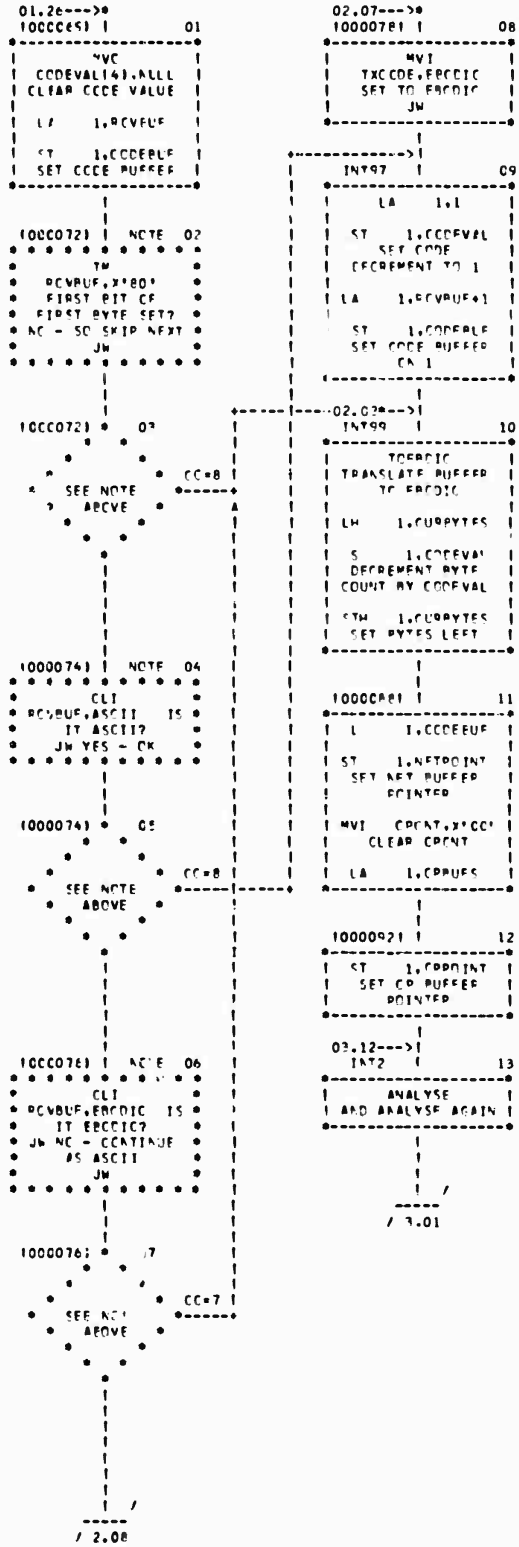

CHART TITLE - 'LOGGER DEVICE CONTROL ROUTINE'

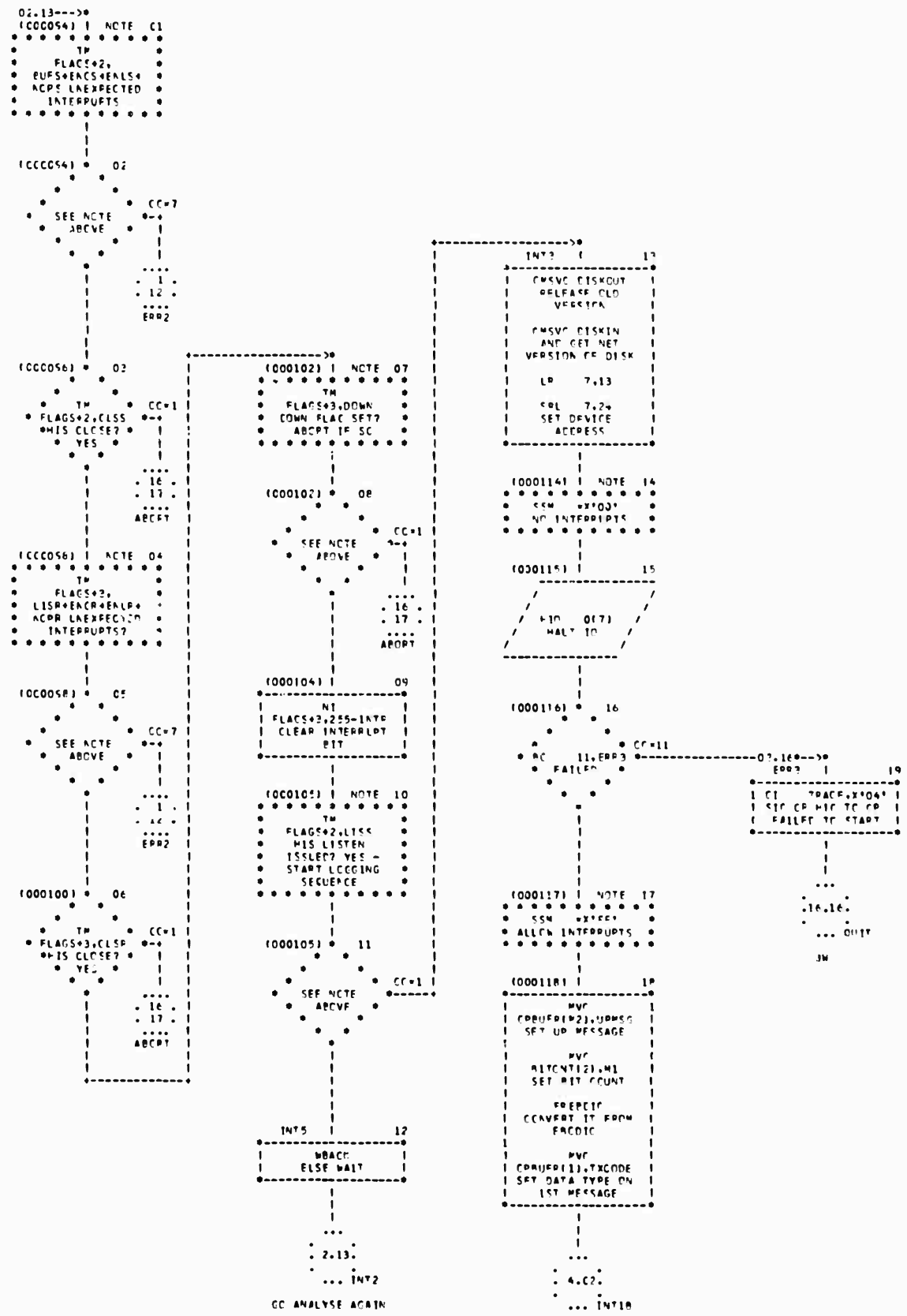

CHART TITLE - 'LOGGER DEVICE CONTROL ROUTINE'

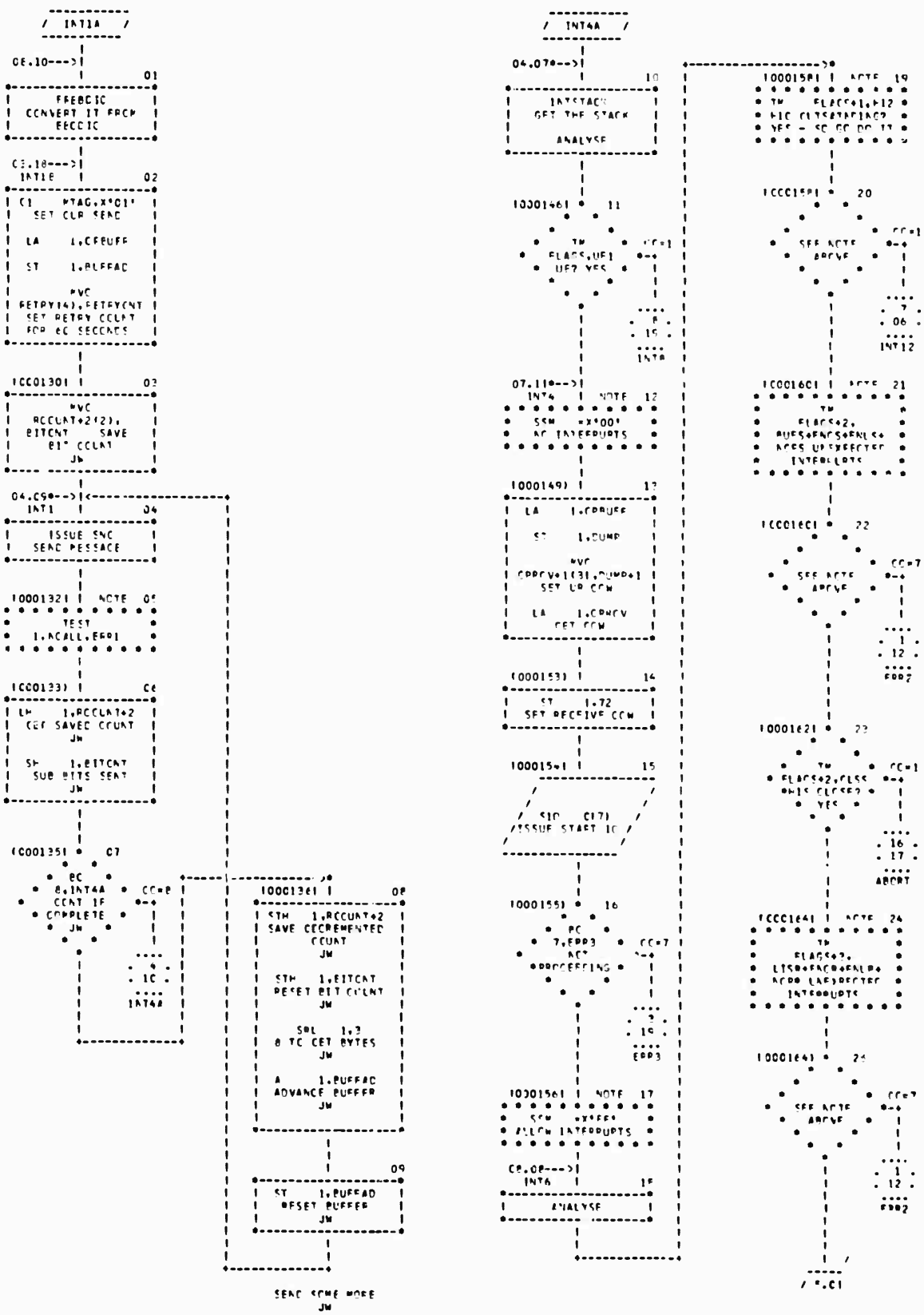

CHART TITLE - 'LOGGER DEVICE CONTROL ROUTINE'

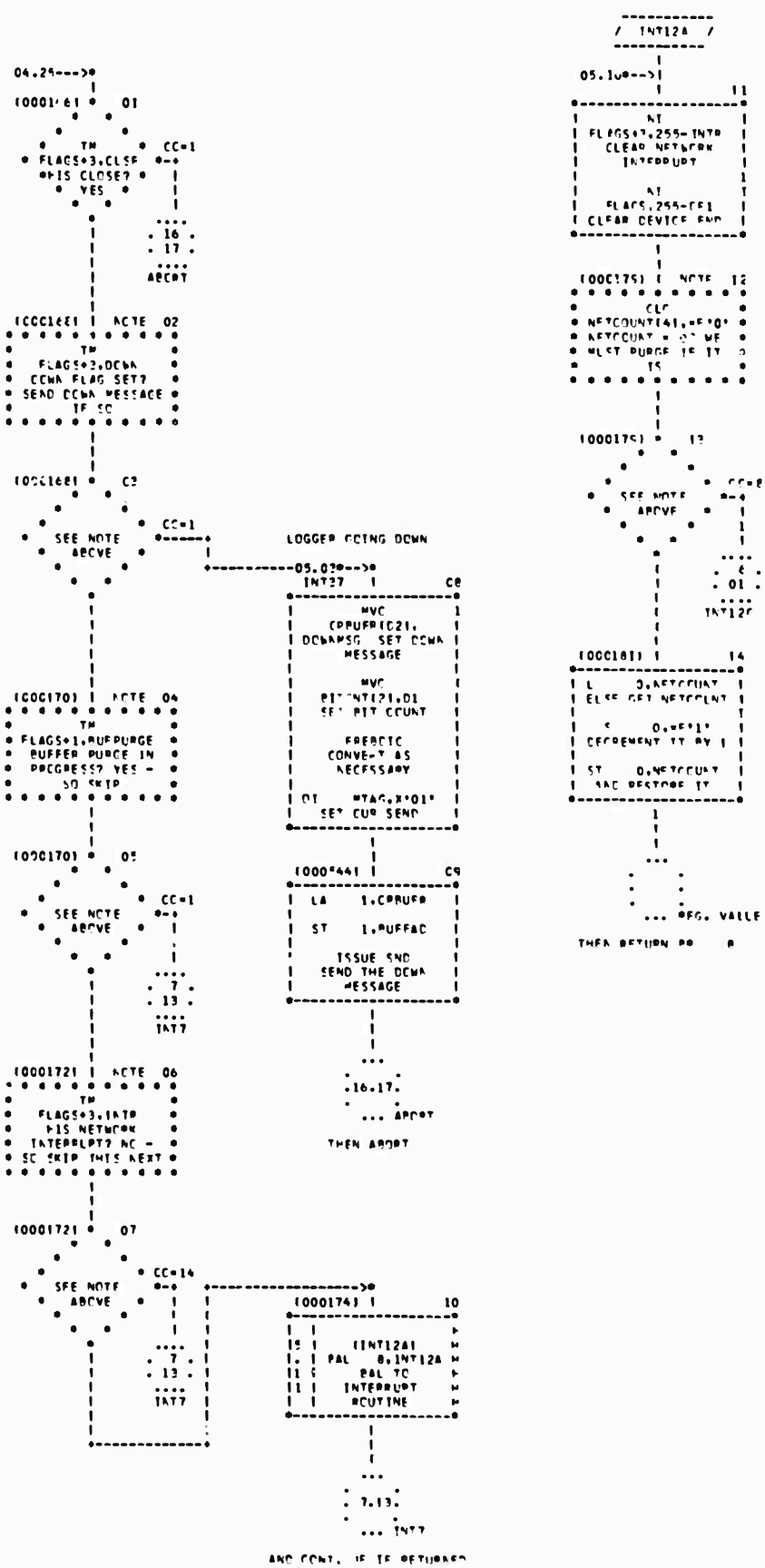

CHART TITLE - 'LOGGER DEVICE CONTROL ROUTINE'

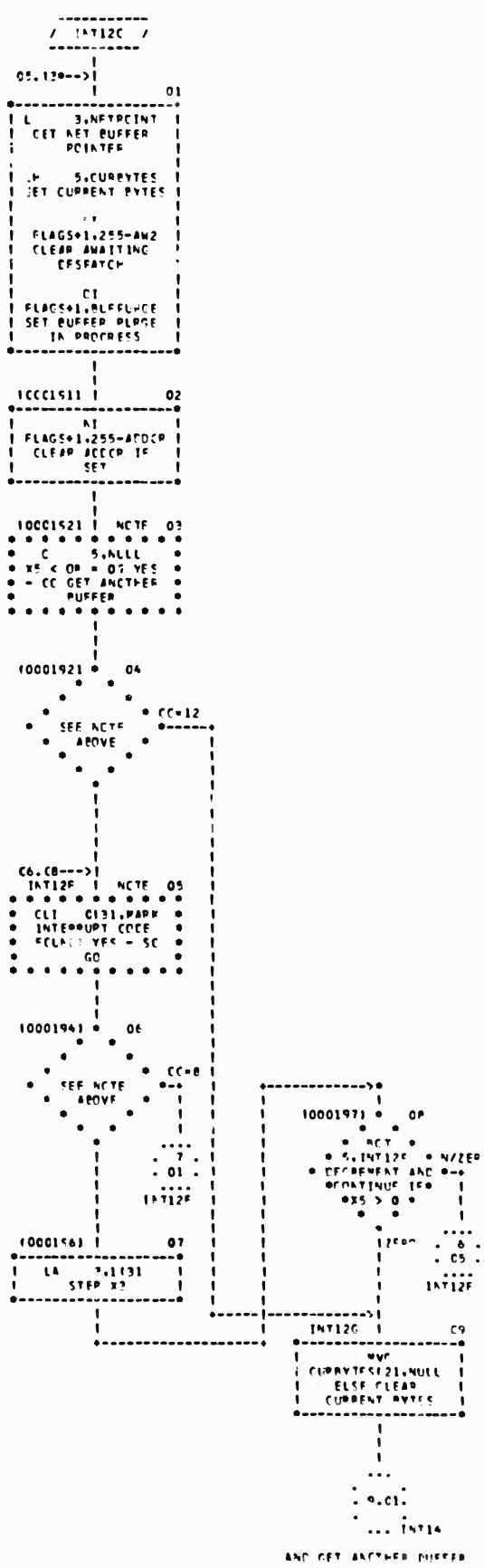

CHART TITLE - 'LOGGER DEVICE CONTROL ROUTINE'

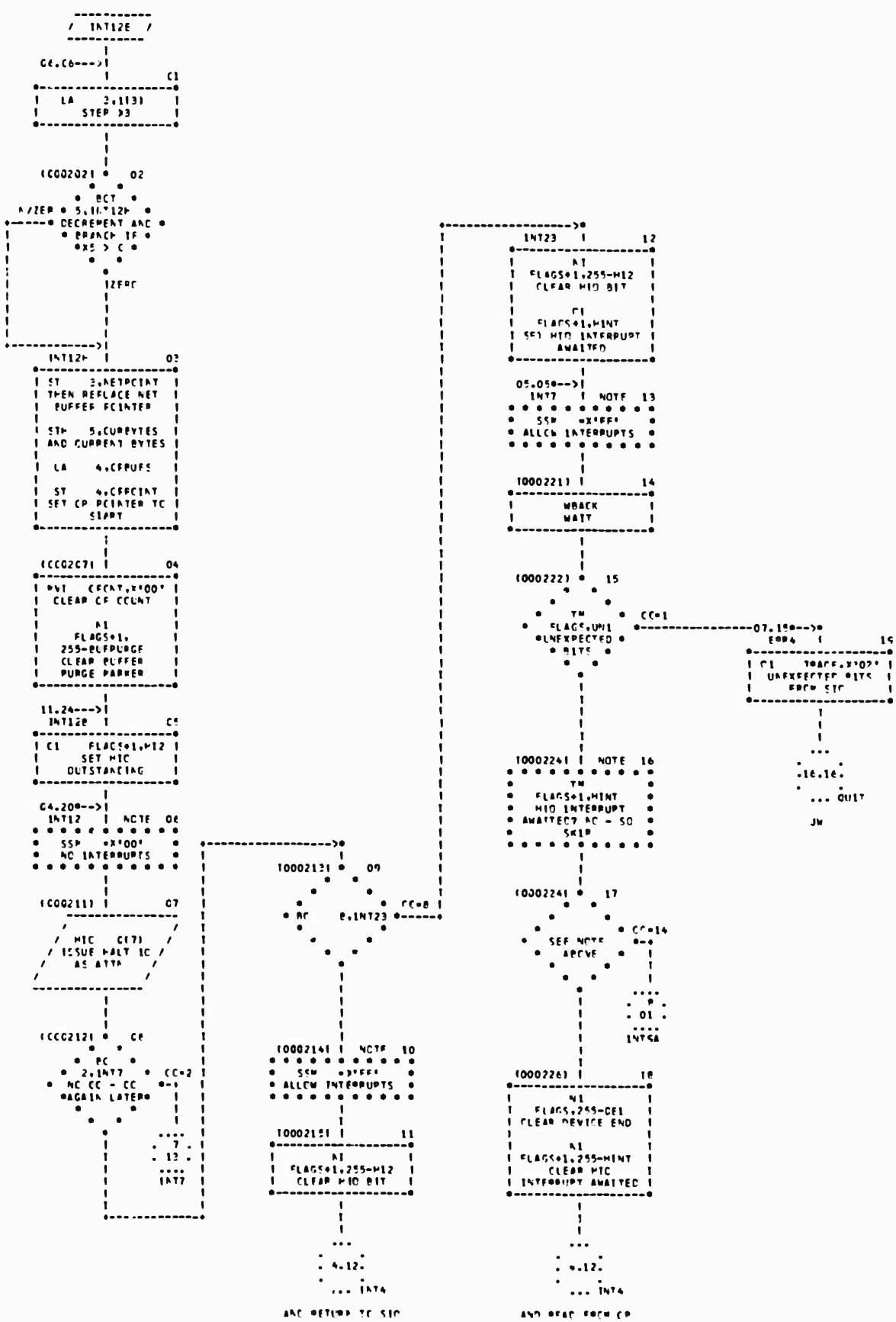

CHART TITLE - 'LOGGER DEVICE CONTROL ROUTINE'

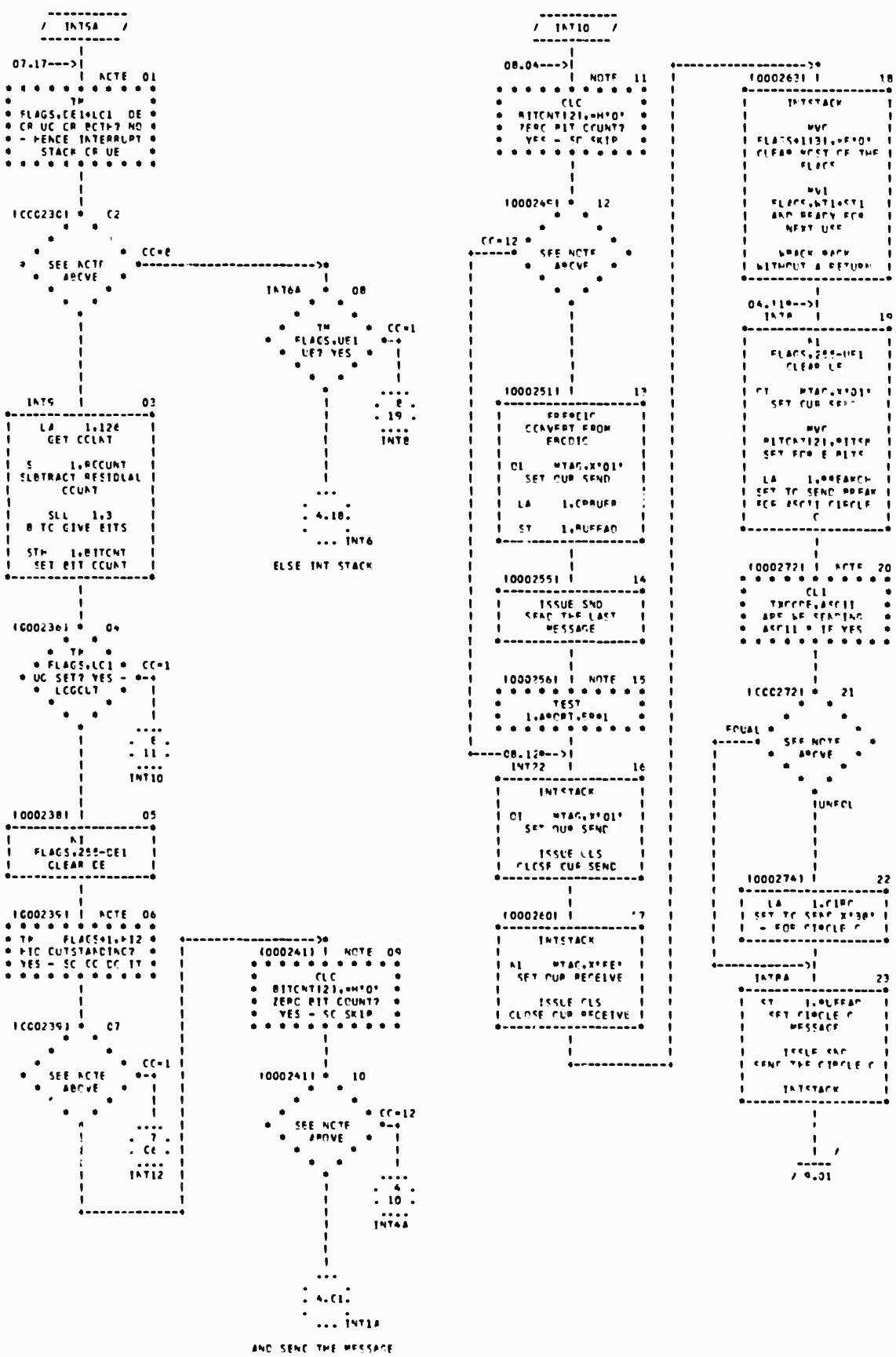

CHART TITLE - 'LOGGER DEVICE CONTROL ROUTINE'

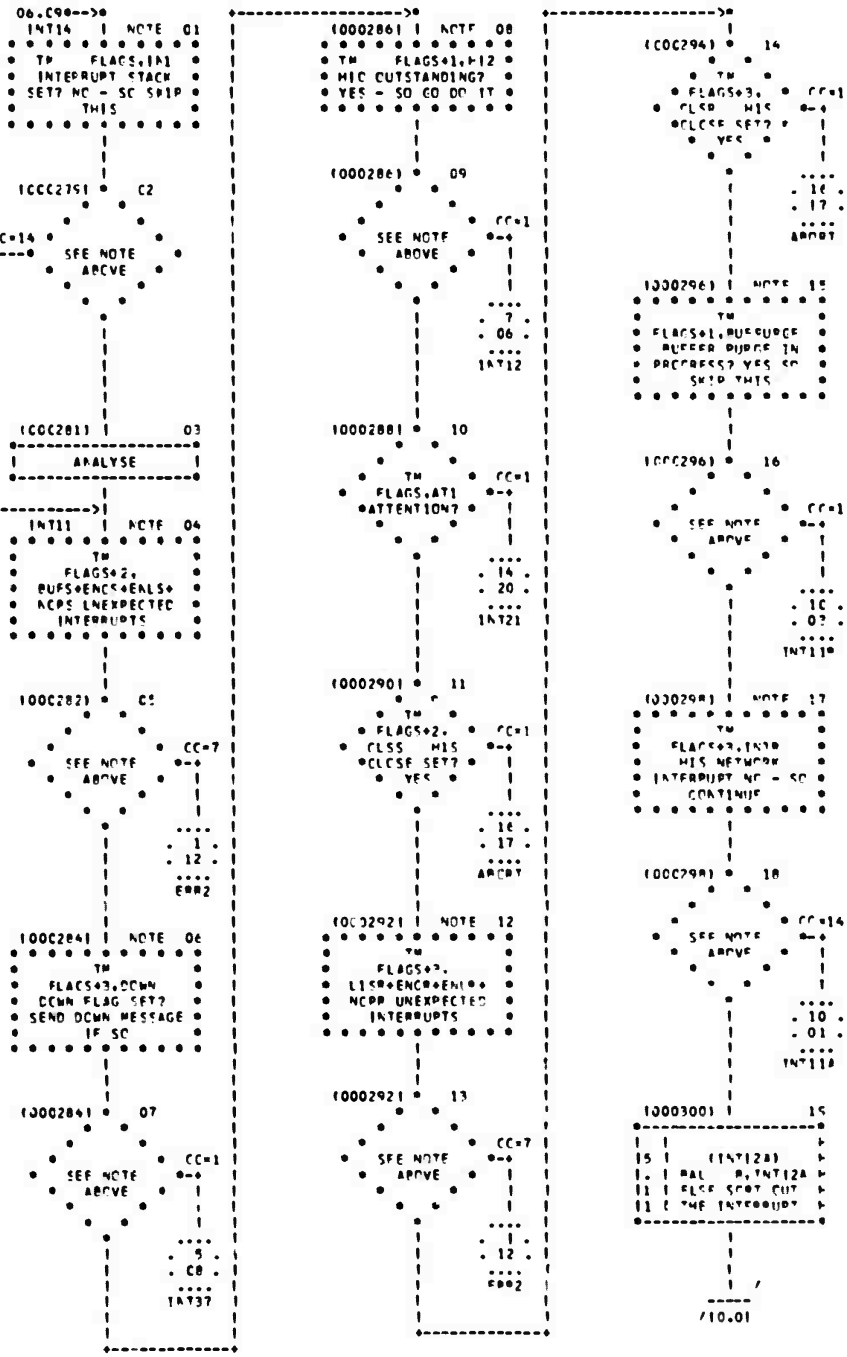

CHART TITLE - 'LCCGER CEVICE CCNTRCL ROUTINE'

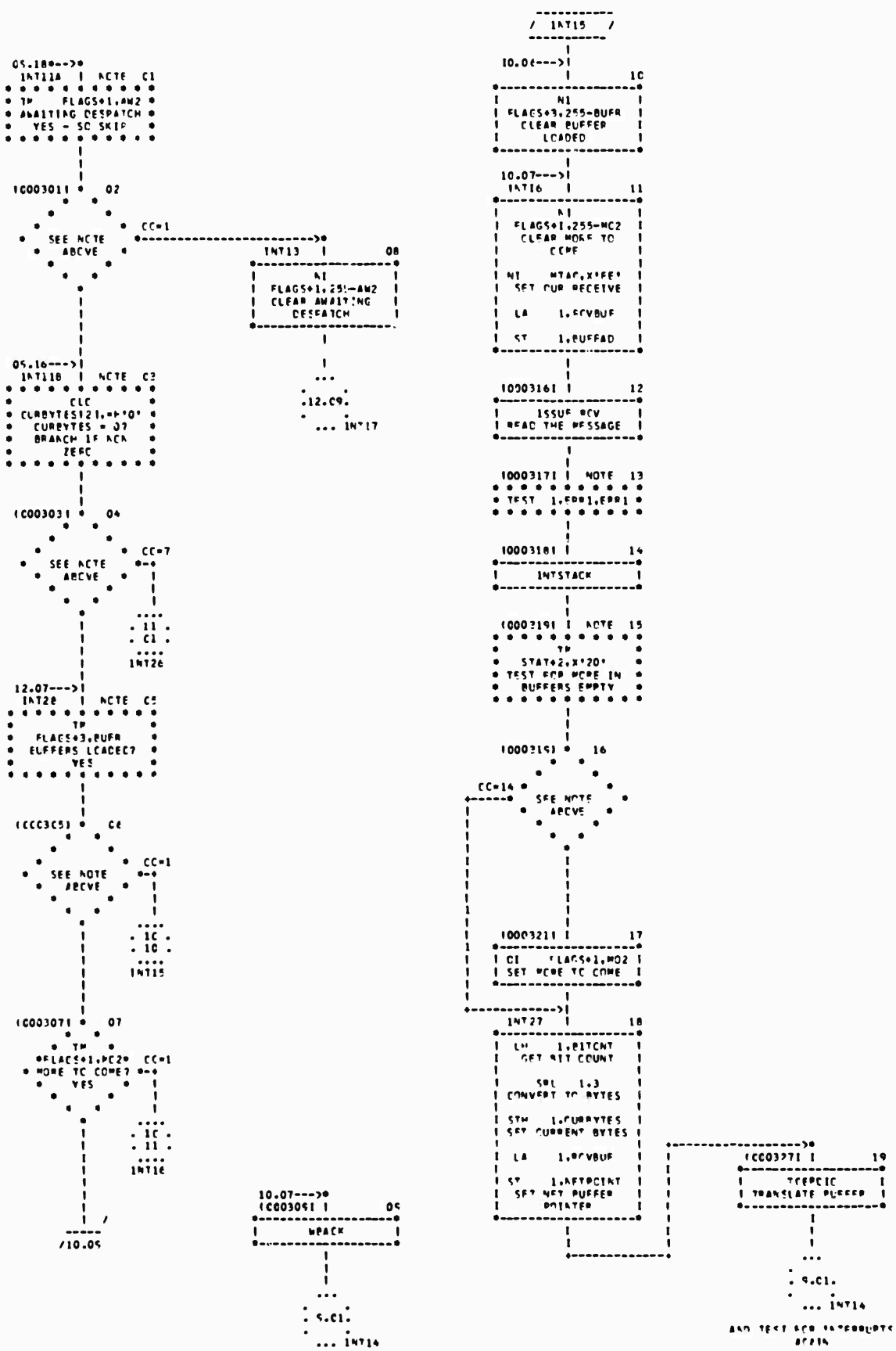

CHART TITLE - 'LOGGER DEVICE CONTROL ROUTINE'

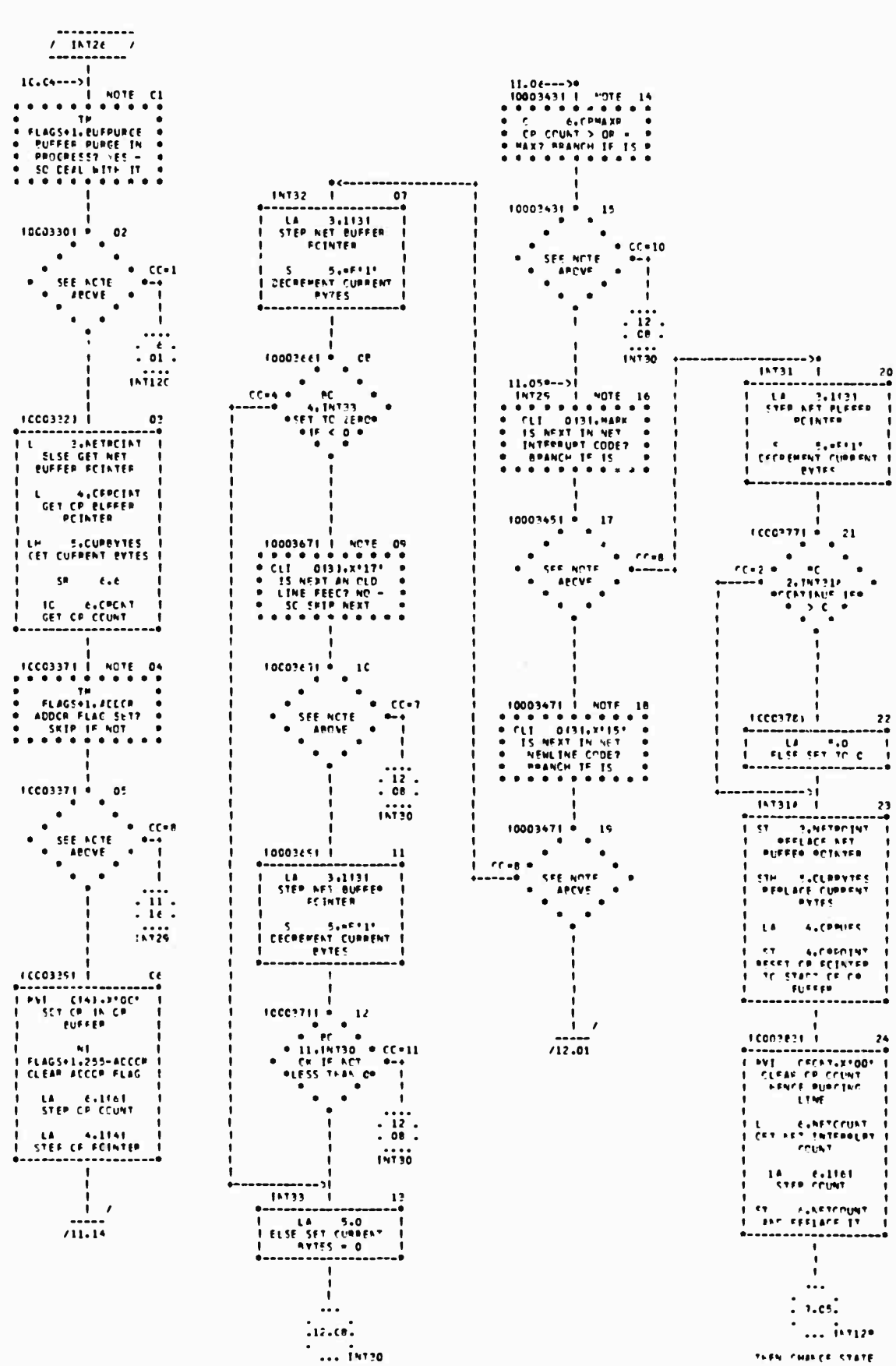

CHART TITLE - 'LOGGER DEVICE CONTROL ROUTINE'

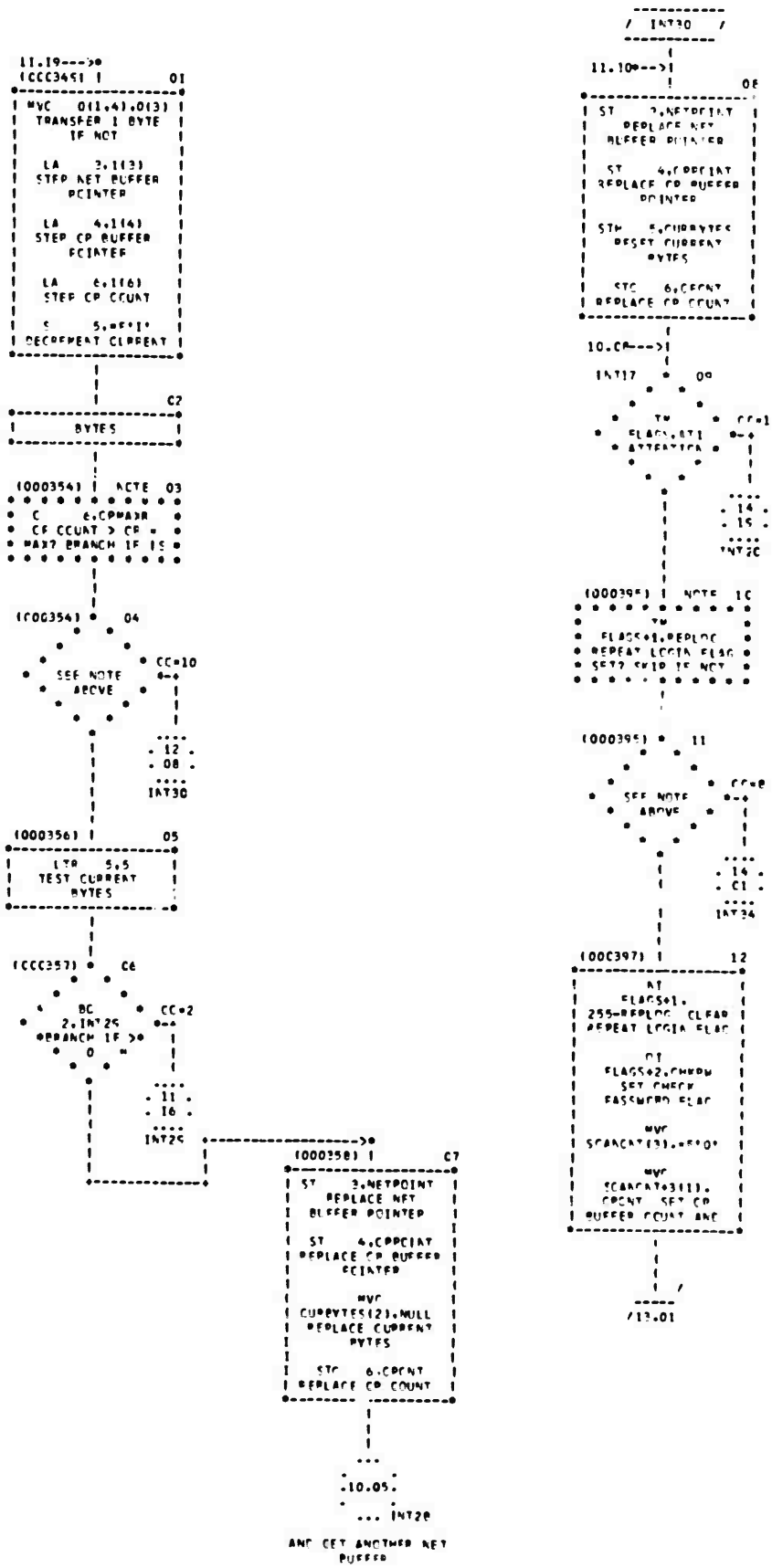

CHART TITLE - 'LOGGER DEVICE CONTROL ROUTINE'

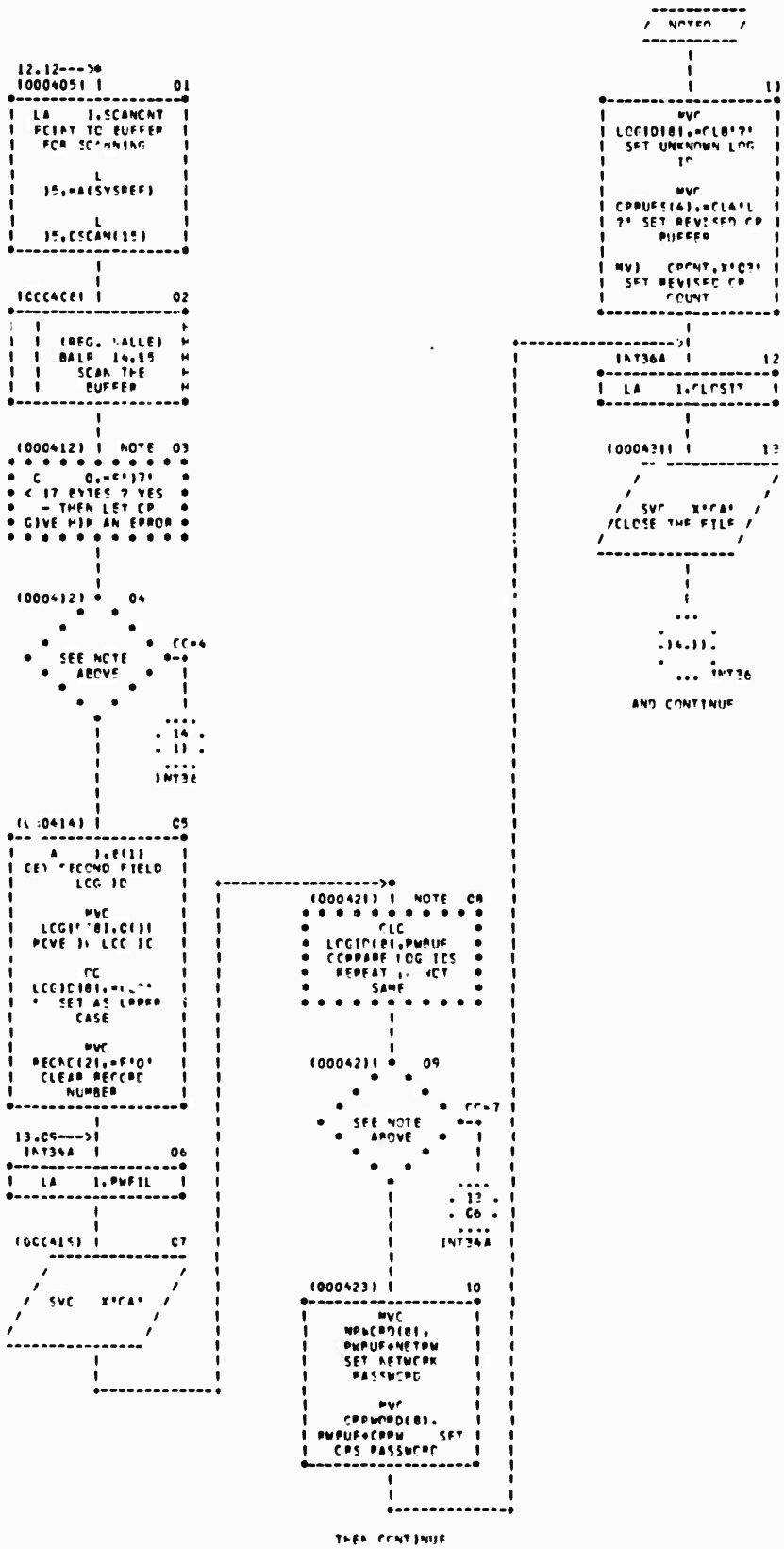

CHART TITLE - 'LOGGER DEVICE CONTROL ROUTINE'

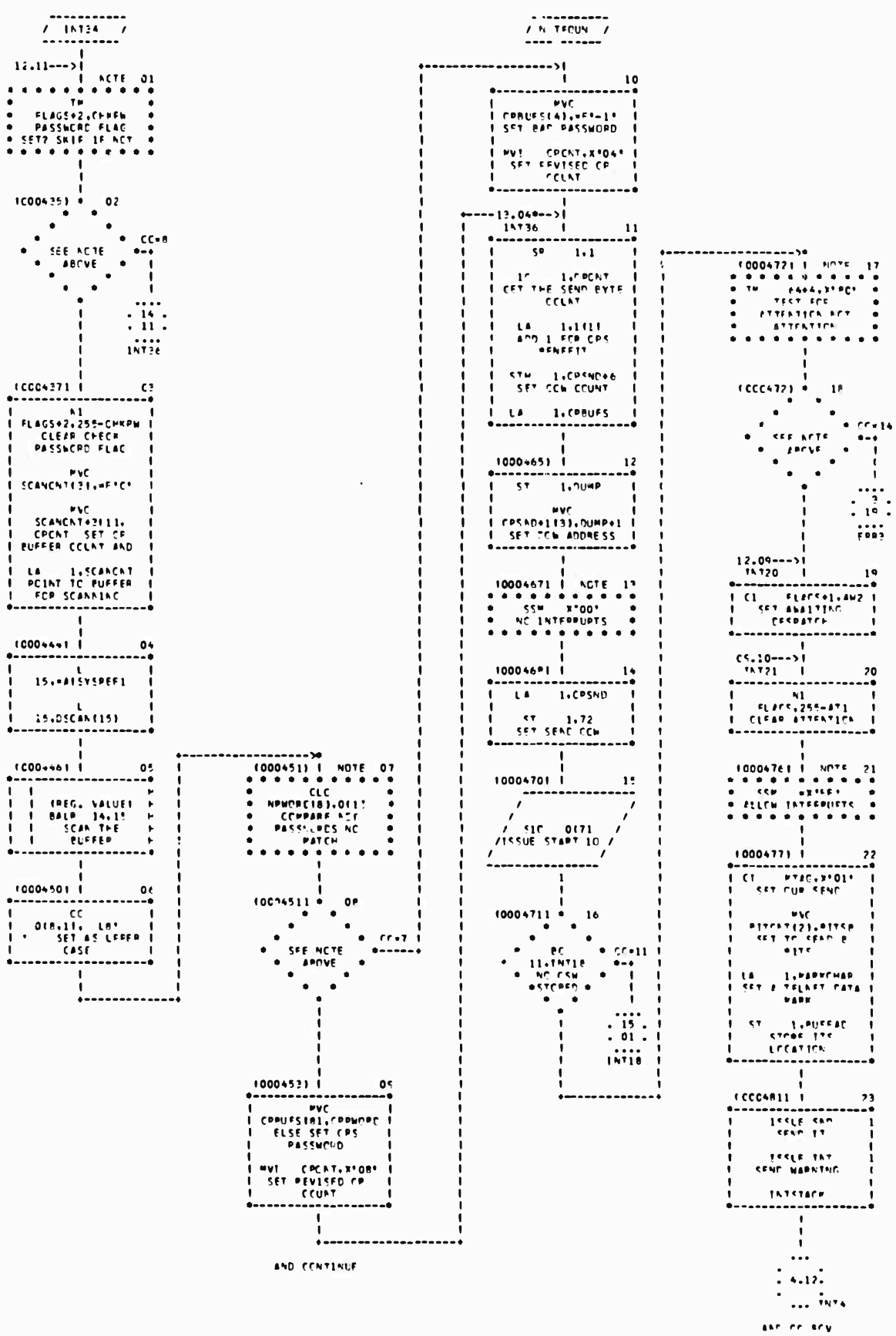

CHART TITLE - 'LOGGER DEVICE CONTROL ROUTINE'

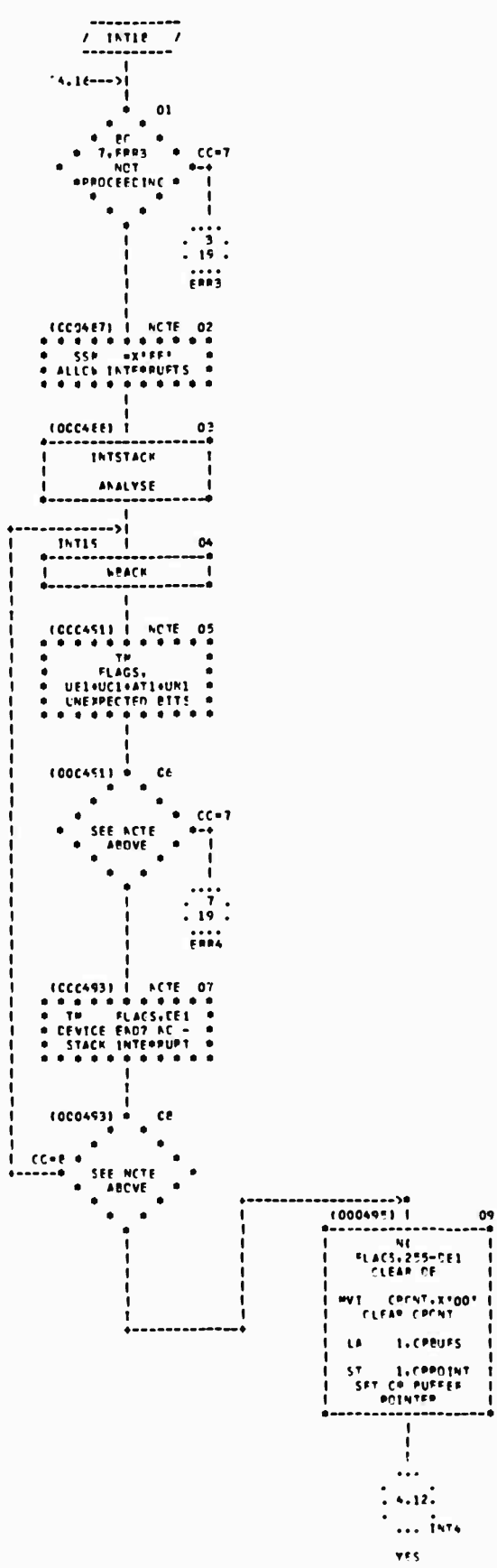

CHART TITLE - 'LOGGER DEVICE CONTROL ROUTINE'

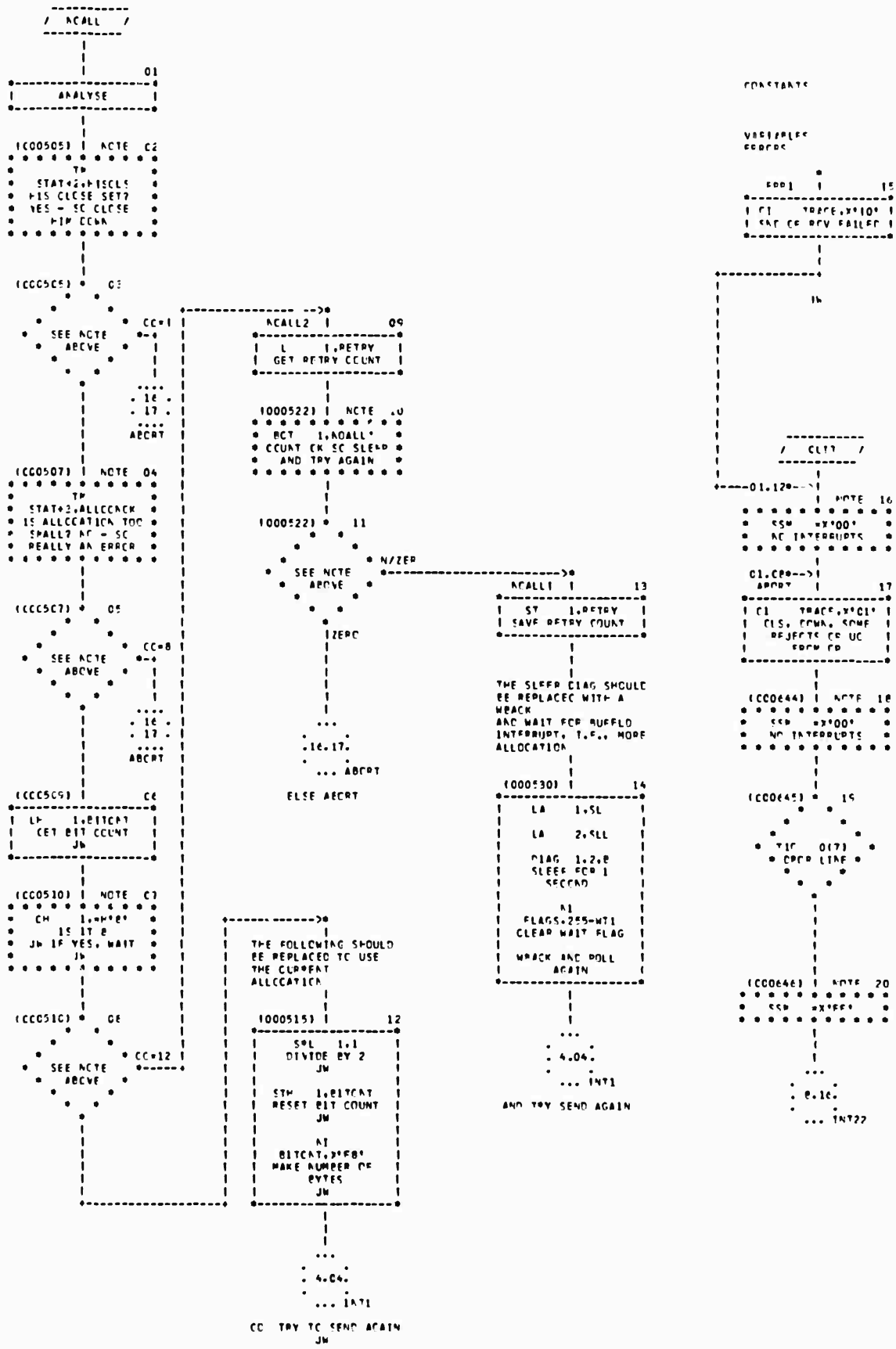

CHART TITLE - 'LOGGER DEVICE CONTROL ROUTINE'

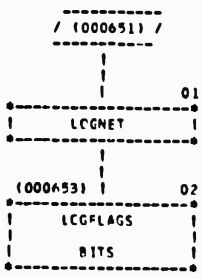

CHART TITLE - ECL STATEMENTS

```
 -----------
/   M2    /
-----------
     |
     |
     |          01
*-------------------*
|  EQU STATEMENT    |
*-------------------*
|  *-UPMSG          |
*-------------------*
```

```
 -----------
/  CSCAN   /
-----------
     |
     |
     |          07
*-------------------*
|  EQU STATEMENT    |
*-------------------*
|  56               |
*-------------------*
```

```
 -----------
/   D2    /
-----------
     |
     |
     |          02
*-------------------*
|  EQU STATEMENT    |
*-------------------*
|  *-DCWNMSG        |
*-------------------*
```

```
 -----------
/  NETPW   /
-----------
     |
     |
     |          08
*-------------------*
|  EQU STATEMENT    |
*-------------------*
|  8                |
*-------------------*
```

```
 -----------
/   SLL   /
-----------
     |
     |
     |          03
*-------------------*
|  EQU STATEMENT    |
*-------------------*
|  *-SL             |
*-------------------*
```

```
 -----------
/   CPPW  /
-----------
     |
     |
     |          09
*-------------------*
|  EQU STATEMENT    |
*-------------------*
|  16               |
*-------------------*
```

```
 -----------
/ EBCDIC  /
-----------
     |
     |
     |          04
*-------------------*
|  EQU STATEMENT    |
*-------------------*
|  X'A2'            |
*-------------------*
```

```
 -----------
/  ASCII  /
-----------
     |
     |
     |          05
*-------------------*
|  EQU STATEMENT    |
*-------------------*
|  X'A0'            |
*-------------------*
```

```
 -----------
/   MARK  /
-----------
     |
     |
     |          06
*-------------------*
|  EQU STATEMENT    |
*-------------------*
|  X'80'            |
*-------------------*
```

CHART TITLE - CONSTANTS AND STORAGE AREAS

```
(000420)          DC    AL4(NOTFO)      NOT FOUND IF FAIL
(000422)          DC    AL4(*+4)
(000555)  LPMSG   DC    X'0C'            DATA TYPE
(000556)          DC    C'LINCOLN LABORATORY CP/67 ONLINE'
(000557)          DC    X'15'           AND NEWLINE
(000560)  *1      DC    AL2((*-LPMSG)*8)
(000561)  DCWMSG  DC    C'LOGGER CLOSING DOWN'
(000562)          DC    X'15'           NEWLINE
(000563)  *2      DC    AL2((*-DCWMSG)*8)
(000570)  SL      DC    C'SL '
(000574)  MARKCHAR DC   X'FC'           TELNET DATA MARK
(000575)  BREAKCH DC    X'81'           TELNET BREAK AS ASCII CIRCLE C
(000576)  CIRC    DC    X'38'           CIRCLE C = EBCDIC REVERSE BREAK
(000577)  CL      DC    AL2((*-CIRC)*8)
(000578)  BITSB   DC    H'8'            8 BITS LONG
(000579)  RETRYCNT DC   F'30'           RETRY 30 TIMES
(000590)  FWFIL   DC    CL8'RDBUF'
(000594)          DC    CL8'LOGGER'
(000595)          DC    CL8'FILE'
(000596)          DC    CL2'  '
(000597)  RECNO   DC    H'
(000598)          DC    AL4(RWBUF)
(000599)          DC    F'0'
(000600)          DC    CL2'F'
(000601)          DC    H'I'
(000602)          DC    F'0'
(000603)  FWBUF   DC    80X'00'
(000604)  CLOSIT  DC    CL8'FINIS'
(000607)          DC    CL8'LOGGER'
(000608)          DC    CL8'FILE'
(000609)          DC    CL2'B1'
(000612)  DISKIN  DC    CL8'DISKIN'
(000613)          DC    CL8'R0'
(000614)          DC    CL8'194'
(000615)          DC    2F'-1'
(000617)  DISKOUT DC    CL8'DISKOUT'
(000618)          DC    CL8'P'
(000619)          DC    2F'-1'
(000623)  COMP    DS    1F
(000624)  *       DS    1F
(000625)  TRACE   DC    1F'0'
(000626)  RETRY   DS    1F
(000627)  CPMAXB  DC    1F'126'         MAX CP SEND BUFFER <17F
(000628)  NULL    DC    1F'0'
(000629)  CCDEPLE DC    1F'0'
(00062A)  CCEPVAL DC    1F'0'
```

CHART TITLE - 'LOGGER CLEAN UP ROUTINE'

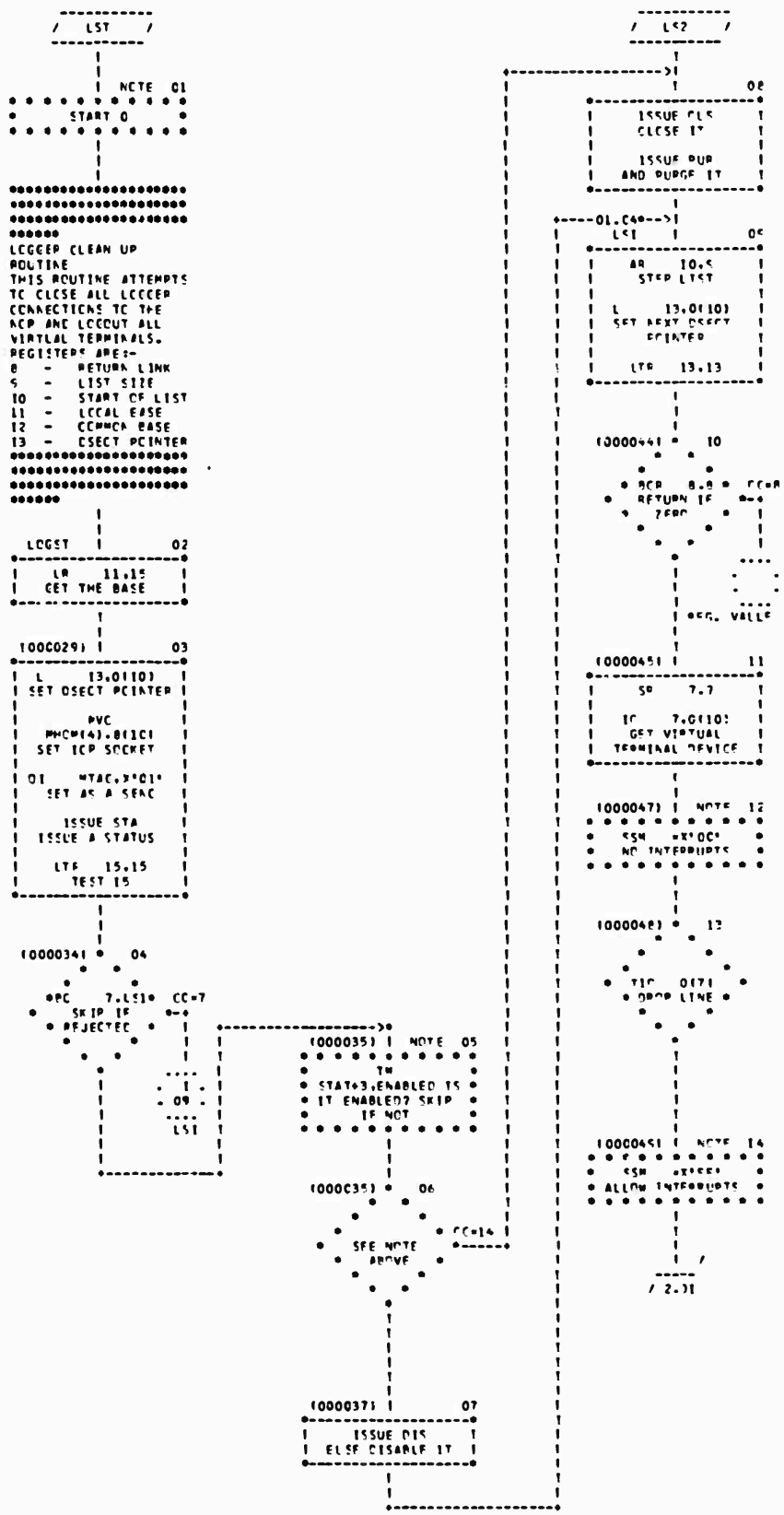

CHART TITLE - 'LOGGER CLEAN UP ROUTINE'

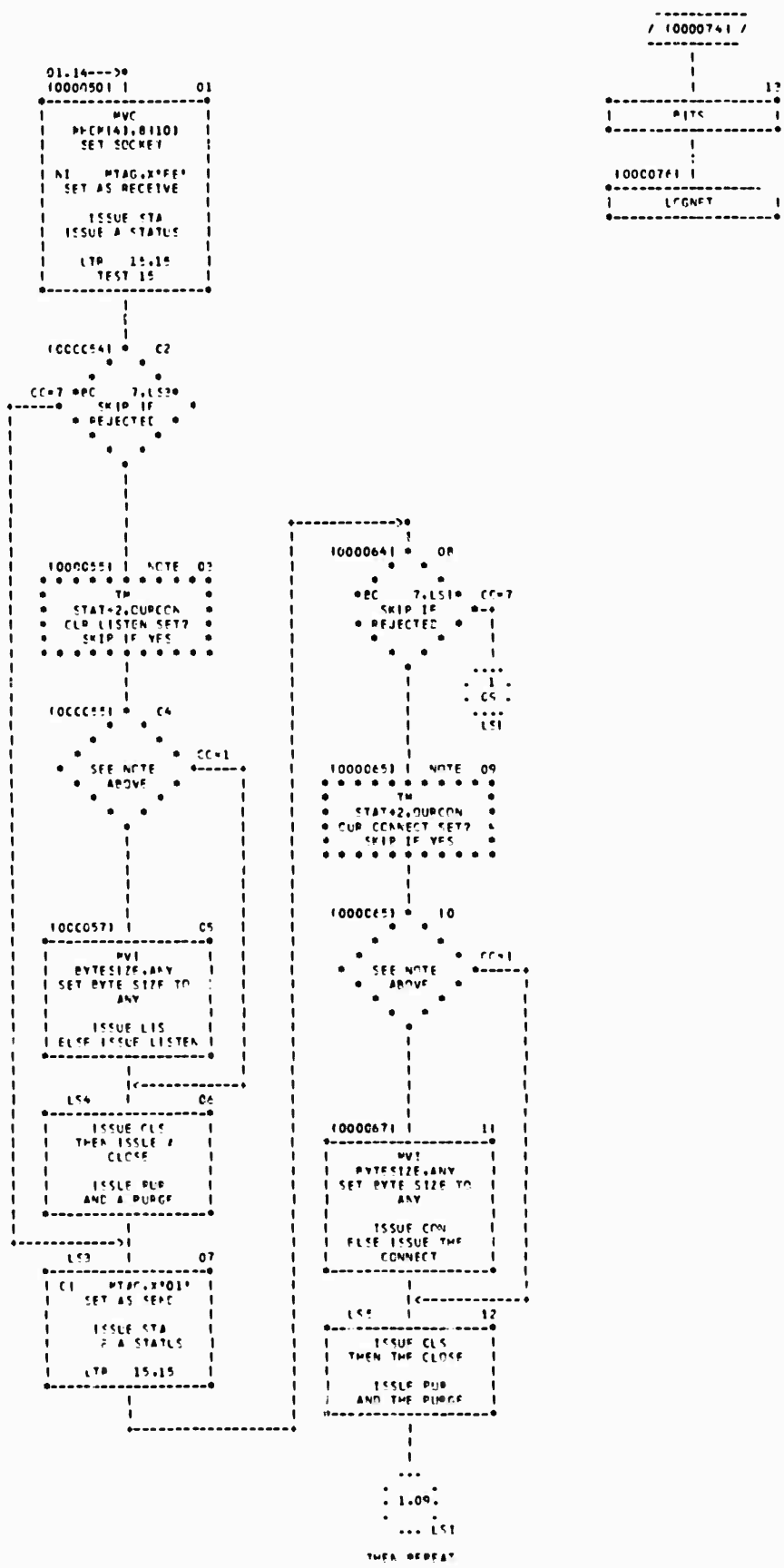

CHART TITLE - ECL STATEMENTS

```
      -----------
     /   ANY    /
     -----------
          |
          |
          |        01
*-------------------*
|   ECL STATEMENT   |
*-------------------*
| 0                 |
*-------------------*
```