AD 653780

Special Technical Report 27

MANUAL FOR ARN-3 TYPE ATMOSPHERIC NOISE MEASURING EQUIPMENT

By: R. L. BROWN

Prepared for:

U.S. ARMY ELECTRONICS COMMAND
FORT MONMOUTH, NEW JERSEY

CONTRACT DA-36-039 AMC-[illegible]0(E)
ORDER NO. 5384-PM-63-91

ARCHIVE COPY

STANFORD RESEARCH INSTITUTE

MENLO PARK, CALIFORNIA

DISCLAIMER NOTICE

THIS DOCUMENT IS THE BEST QUALITY AVAILABLE.

COPY FURNISHED CONTAINED A SIGNIFICANT NUMBER OF PAGES WHICH DO NOT REPRODUCE LEGIBLY.

STANFORD RESEARCH INSTITUTE
MENLO PARK, CALIFORNIA

November 1966

Special Technical Report 27

MANUAL FOR ARN-3 TYPE ATMOSPHERIC NOISE MEASURING EQUIPMENT

Prepared for:

U.S. ARMY ELECTRONICS COMMAND
FORT MONMOUTH, NEW JERSEY

CONTRACT DA-36-039 AMC-00040(E)
ORDER NO. 5384-PM-63-91

By: R. L. BROWN

SRI Project 4240

Distribution of this document is unlimited.

Approved: E. L. YOUNKER, TECHNICAL DIRECTOR
MRDC ELECTRONICS LABORATORY, BANGKOK

W. R. VINCENT, MANAGER
COMMUNICATION LABORATORY

D. R. SCHEUCH, EXECUTIVE DIRECTOR
ELECTRONICS AND RADIO SCIENCES

SPONSORED BY
ADVANCED RESEARCH PROJECTS AGENCY
ARPA ORDER 371

Copy No. 81

ABSTRACT

Equipment has been developed and constructed for use in studies of atmospheric noise in Thailand. Average noise power and the mean envelope voltage can be measured at eight fequencies in the VLF, LF, MF, and HF bands. The design of this equipment is derived from the National Bureau of Standards (now ESSA) ARN-2 noise-measuring equipment. The equipment is operated in conjunction with the standard ARN monopole and ground plane and so the data obtained are compatible with data from the existing worldwide network of noise stations coordinated by ESSA, Boulder, Colorado. Impulsive voltages induced in the standard antenna by local thunderstorms are recorded at several threshold levels by lightning-flash analyzer equipment to supplement the ARN type data.

This report is intended as an operation and maintenance manual. It explains the principles of operation and includes schematic diagrams and sample records as well as a description of calibration and data-reduction procedures.

CONTENTS

ABSTRACT iii

LIST OF ILLUSTRATIONS vii

LIST OF TABLES ix

ACKNOWLEDGMENTS xi

I INTRODUCTION 1

II PRINCIPLES OF OPERATION 9

A. General 9

B. Circuit Description 15

1. Line-Voltage Range Limiter, U-28 26
2. General Radio Automatic Line-Voltage Regulators, Model 1570-ALS 15; U-18 and U-24 28
3. Kepco Power Supplies, Models HB-4-AM (U-11) and SM-325-1M (U-12) 28
4. Relay and Isolator Filament Supply, U-23 28
5. Timing and Control Unit, U-22 28
6. Input Panel, U-7 34
7. Attenuator Panel, U-13 37
8. Hammerlund SP-600-JX Receivers, U-4, U-5, U-16, U-17 43
9. Low-Frequency Converters and Power Supplies, U-1, U-20, U-30, U-31 46
10. Function Shelves, U-3 and U-15 50
11. Recorder Pen Drive Amplifiers, U-10, and Power Supply, U-19 52
12. Recorders, U-2 and U-14 52
13. Speaker Panel, U-8 52
14. HF Signal Generator, U-9 52
15. LF Calibration Instrumentation, U-29 55
16. Calibration Unit, U-6 55
17. Counter Drive Unit, LFA, U-27 55
18. Display Panel, LFA, U-26 62
19. Recording Camera-Control Unit, U-21 62
20. Recording Camera, U-25 62

CONTENTS (Concluded)

III INSTALLATION, OPERATION, AND CALIBRATION 67

A. Installation 67

1. Siting 67
2. Antenna 67
3. Other Requirements 67
4. Equipment 68
5. Initial Turn-on and Preliminary Adjustments 68

B. Operation 69

C. Calibration 71

1. Pen-Drive Amplifier Calibration 72
2. HF Calibration 73
3. LF Calibration 77
4. LFA Calibration 79

IV DATA COLLECTION AND REDUCTION 81

A. General 81

B. Determination of Median and Decile Values 90

V MAINTENANCE AND TROUBLE SHOOTING 93

VI CONCLUSIONS AND RECOMMENDATIONS 103

Appendix A CALIBRATION THEORY 105

Appendix B COMB FILTER ALIGNMENT 113

Appendix C PORTABLE EQUIPMENT INSTALLATION 119

REFERENCES 133

DISTRIBUTION LIST 137

DD Form 1473

ILLUSTRATIONS

Fig. 1	Map Showing Laem Chabang	4
Fig. 2	View of Ground Plane, Antenna, and Equipment Van	5
Fig. 3	Equipment, South Side, Laem Chabang	6
Fig. 4	Equipment, North Side, Laem Chabang	7
Fig. 5	Functional Block Diagram	11
Fig. 6	Impedance of ARN Antenna	13
Fig. 7	Equipment Layout, Laem Chabang	17
Fig. 8	Signal Interconnections, Laem Chabang	19
Fig. 9	Primary AC Power Distribution, Laem Chabang	21
Fig. 10	Control and Secondary Power Interconnections, Laem Chabang	23
Fig. 11	Line-Voltage Range Limiter, U-28	27
Fig. 12	Line-Voltage Regulator Connections, U-18 and U-24	29
Fig. 13	Relay and Isolator Filament Power Supply, U-23	30
Fig. 14	Timing and Control Unit, U-22	31
Fig. 15	Input Panel, U-7	35
Fig. 16	LF Preamplifier and Filter Response, ARN-3	38
Fig. 17	MF-HF Preamplifier Response, ARN-3	39
Fig. 18	Attenuator Panel, U-13	41
Fig. 19	SP-600-JX Receiver Modifications U-4, U-5, U-16, U-17.	44
Fig. 20	AVC Control Characteristics of SP-600-JX Receiver	45
Fig. 21	Dynamic Range Requirements, ARN-3	46
Fig. 22	LF Converters, ARN-3, U-1	47
Fig. 23	Power Supply for LF Converters, Laem Chabang, U-20	49
Fig. 24	Function Shelf, U-3 and U-15	Back Cover Pocket
Fig. 25	Modification to Brush Recorders, U-2, U-14	53
Fig. 26	Speaker Panel, U-8	54

Fig. 27 LF Calibration Instrumentation, U-29 55
Fig. 28 Calibration Unit, U-6 57
Fig. 29 Counter Drive Unit, LFA, U-27 59
Fig. 30 Display Panel, LFA, U-26 63
Fig. 31 Recording Camera Control Unit, U-21 64
Fig. 32 Recording Camera, U-25 65
Fig. 33 Antenna Installation at Lac Chabang 68
Fig. 34 Typical Data Chart, Channel 1 and 2 82
Fig. 35 Typical Data Chart, Channel 3 and 4 83
Fig. 36 Typical Calibration Marking of Chart 85
Fig. 37 Typical Data Sheet, F_a 86
Fig. 38 Typical Data Sheet, V_d 87
Fig. 39 Typical Log of Calibration Factors, MF and HF 88
Fig. 40 Typical Log of Calibration Factors, LF and VLF 89
Fig. B-1 Comb Filter Layout 116
Fig. C-1 Equipment Layout, Portable 122
Fig. C-2 Signal Interconnections, Portable 123
Fig. C-3 Primary Power Distribution, Portable 125
Fig. C-4 Control and Secondary Power Interconnections, Portable 127
Fig. C-5 LF Converters, ARN-3, Portable, U-30 129
Fig. C-6 Power Supplies for LF Converters, Portable, U-31 131

TABLES

Table I	Equipment Specifications	10
Table II	Units Comprising the ARN-3 and LFA Complex	16
Table III	Table for Determining Median, Lower, and Upper Decile Values	91
Table IV	Typical Voltage and Resistance Values	94
Table V	List of Tubes and Fuses	98
Table VI	Maintenance Components Listed by Unit	99
Table B-1	Effect of Varying Filter Elements	115

ACKNOWLEDGMENTS

We gratefully acknowledge the consulting help of Mr. W. Q. Crichlow, Mr. R. T. Disney and their staff of ESSA (formerly NBS) in the design and check-out of this equipment. Mr. Crichlow designed the ARN-2 and had assembled a portable (panel-truck-mounted) version which he designated ARN-3. The ARN-3 basic circuitry was used in the design of the equipment described herein, so that it has been called ARN-3 type equipment. Appendix A, Calibration Theory, is entirely based on Mr. Crichlow's work in Ref. 7.

We also wish to thank Mr. John Yarborough and his staff in the SRI Computer Techniques Laboratory for their excellent work in constructing the basic equipments, and Mr. Richard Krebs of the Communication Laboratory for his handling of their check-out, shipping and installation.

In addition, the help of Mr. Rangsit Chindahporn of SRI Bangkok; of Lieutenant Chaikamol Lumjiak of the Royal Thai Air Force, and of Mr. Kenneth Taylor of Vitro Corporation in the installation and check-out of the basic equipment and in the construction and installation of auxiliary portions of the equipment has been invaluable. They have also been responsible for negotiations with various agencies of the Thai government, for training maintenance and data-processing personnel, and for the operation and maintenance of the equipment.

I INTRODUCTION

The Military Research and Development Center, a joint Thai-U.S. agency organized to conduct research on many subjects in a tropical environment, has a major interest in tropical radio communication. In any radio system or equipment design, a fundamental consideration is the noise environment in which it will operate.[1]* The environmental noise (as distinguished from internal or system noise) consists of man-made, cosmic, and atmospheric noise. Man-made noise is a separate problem which involves political as well as technical considerations in its measurement and control. The techniques for measuring it [2,3] are radically different from those used to measure atmospheric noise. Cosmic (sometimes called galactic) noise, which is radio noise broadcast by the sun and other stars, is relatively low in level, and is not a very important component below 10 MHz because of the shielding effect of the ionosphere. Atmospheric noise [4,5] consists primarily of noise generated by lightning discharges.

The principal components generated by lightning consist of large impulses due to nearby discharges and a more continuous background from more distant flashes. The transmission of this background is complex; for close discharges it is primarily by ground wave and line-of-sight paths. When the thunderstorm sources are more distant, the transmission at all frequencies up to those penetrating the ionosphere is almost entirely by ionospheric reflection. The thunderstorm sources are predominantly located where there are land masses near the geographic equator. Therefore a high noise level can be expected in the tropics because of the high degree of ionization of the ionosphere and consequent good propagation conditions and because the noise is mostly generated in tropical areas.

---

* References are listed at the end of this report.

A network of identical atmospheric noise measuring equipments designed and coordinated by ESSA (the Environmental Sciences Services Administration) has been in operation at sixteen locations around the world for a number of years.[6] The equipment has the designation ARN-2;[7] it measures noise over a 200-Hz bandwidth at eight frequencies. Data from the network is coordinated and published by ESSA[8] and CCIR [9,10] Since Thailand is a long way from the nearest of these stations (Singapore, [11,12] which has been inoperative for long periods), and communication experiments in Thailand indicated very wide statistical deviations from the predicted noise medians, and since data could be obtained from equipment of this kind to correlate prediction with system performance (particularly with respect to relative antenna acceptance of noise), it was determined to procure similar equipment for measurements in Thailand.

Since such equipment is complex [13,14] and not commercially available, it was decided to construct equipment embodying the basic circuitry of a transportable NBS modification of the ARN-2. SRI adapted this modification for use on Project SEA CORE in Thailand, and the SRI equipment is hereafter referred to as the ARN-3. However, it differs from the NBS equipment in a great many respects. It uses four of the same frequencies (nominally 0.5, 2.5, 5, and 10 MHz), the same 200-Hz bandwidth, and the same integration time constants. There is also provision to measure noise at four VLF[15] frequencies: 6, 13, 27, and 160 kHz. Unlike the ARN-2 and the ARN-3 prototype which measure two frequencies at a time, this equipment measures four frequencies (has four channels). Timing and programming equipment has, in addition, been designed and constructed by SRI.

Larger impulses from relatively nearby discharges have a briefly catastrophic effect on radio reception. The bulk of previous climatological data on lightning flashes has been collected by counters operating in two frequency bands; these are usually referred to as ERA[16] (100 Hz to 2500 Hz) and CCIR[17] (2 kHz to 50 kHz), indicating the origin of the impulse detectors used. The bulk of such studies[18,19,20,21,22,23]

is not specifically directed toward the problems posed to radio communication by such impulses. Therefore, a Lightning Flash Analyzer was added to the equipment to perform pulse-height analyses in each of the two "standard" frequency bands described above.

Since the ARN-3 equipment is intended to measure atmospheric radio noise uncontaminated by man-made noise, it is necessary to site the equipment where man-made noise is not excessive.* Such siting includes staying well away from power lines, which are not only a source of noise but also act as transmission lines to carry noise from one place to another. As a result the equipment must be powered by a local generator. This involves problems of voltage and frequency control which add to the complexity of the equipment. The site chosen in Thailand is at Laem Chabang, on the eastern coast of the Gulf of Thailand about 130 km south of Bangkok (see Figs. 1, 2, 3, and 4). The balance of this manual will be in terms of the Laem Chabang installation; Appendix C discusses the minor difference between this and a second ARN-3 unit, which has been designed for portable installation.

With these installations the intention is to assemble a detailed picture of atmospheric noise in Thailand including its statistical distribution with frequency, time of day, season, time of sunspot cycle, and geographic location. The VLF converters provide the capability of identifying sudden ionospheric disturbances and in some cases of predicting communication disruption, since these disturbances follow magnetic storms. The Lightning Flash Analyzer will extend the analysis of the pulse structure of noise up to the "catastrophic" (from a communications point of view) range. The equipment can be used in experiments to gather data on relative noise acceptance by certain common tactical antenna types. Also, by using data from the Laem Chabang and portable equipments, geographical factors and correlation factors depending on distance may be found.

---

* See "Selection of MRDC Low Noise Field Site," Memo for SRI Project 4240 (unpublished).

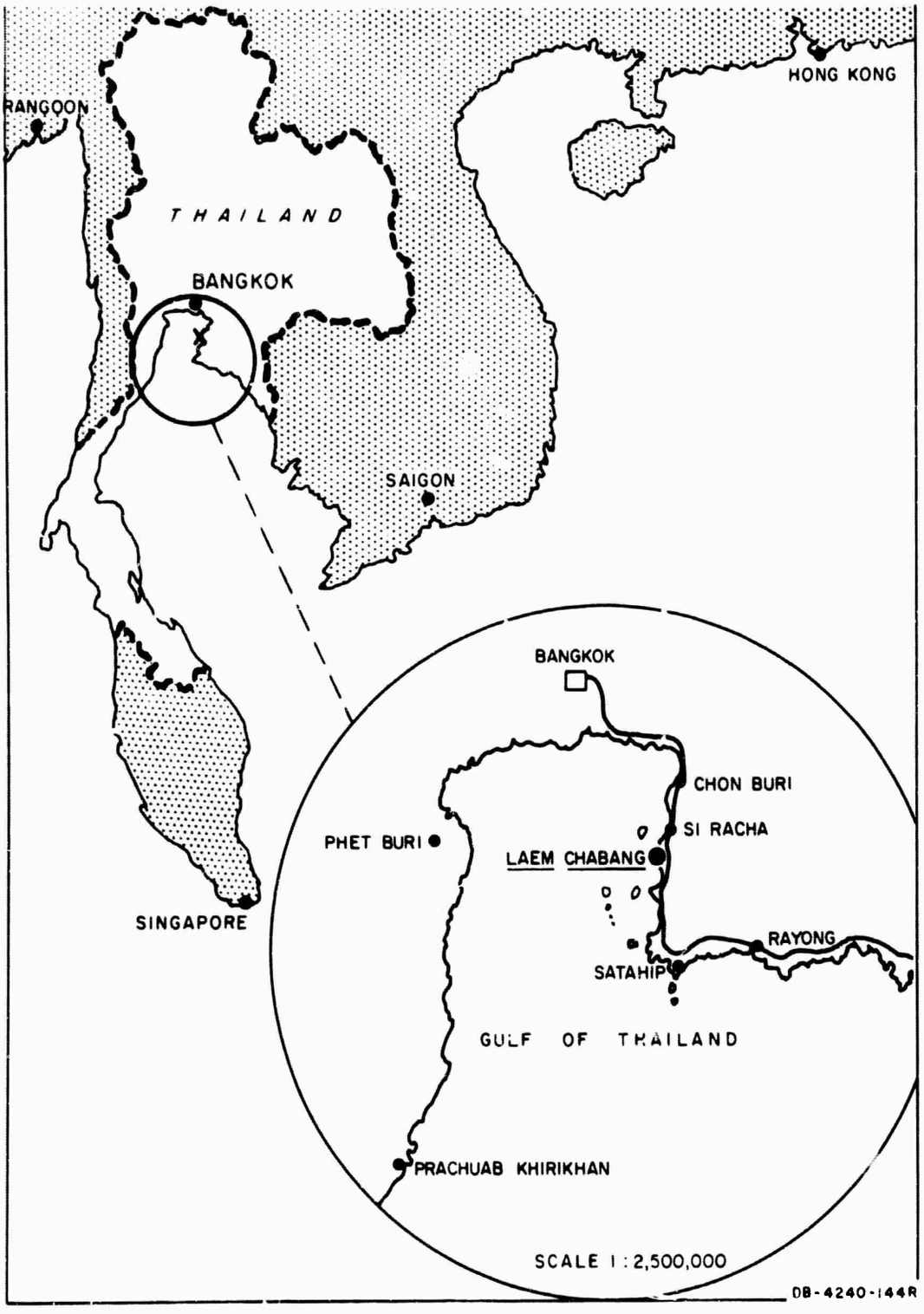

FIG. 1 MAP SHOWING LAEM CHABANG

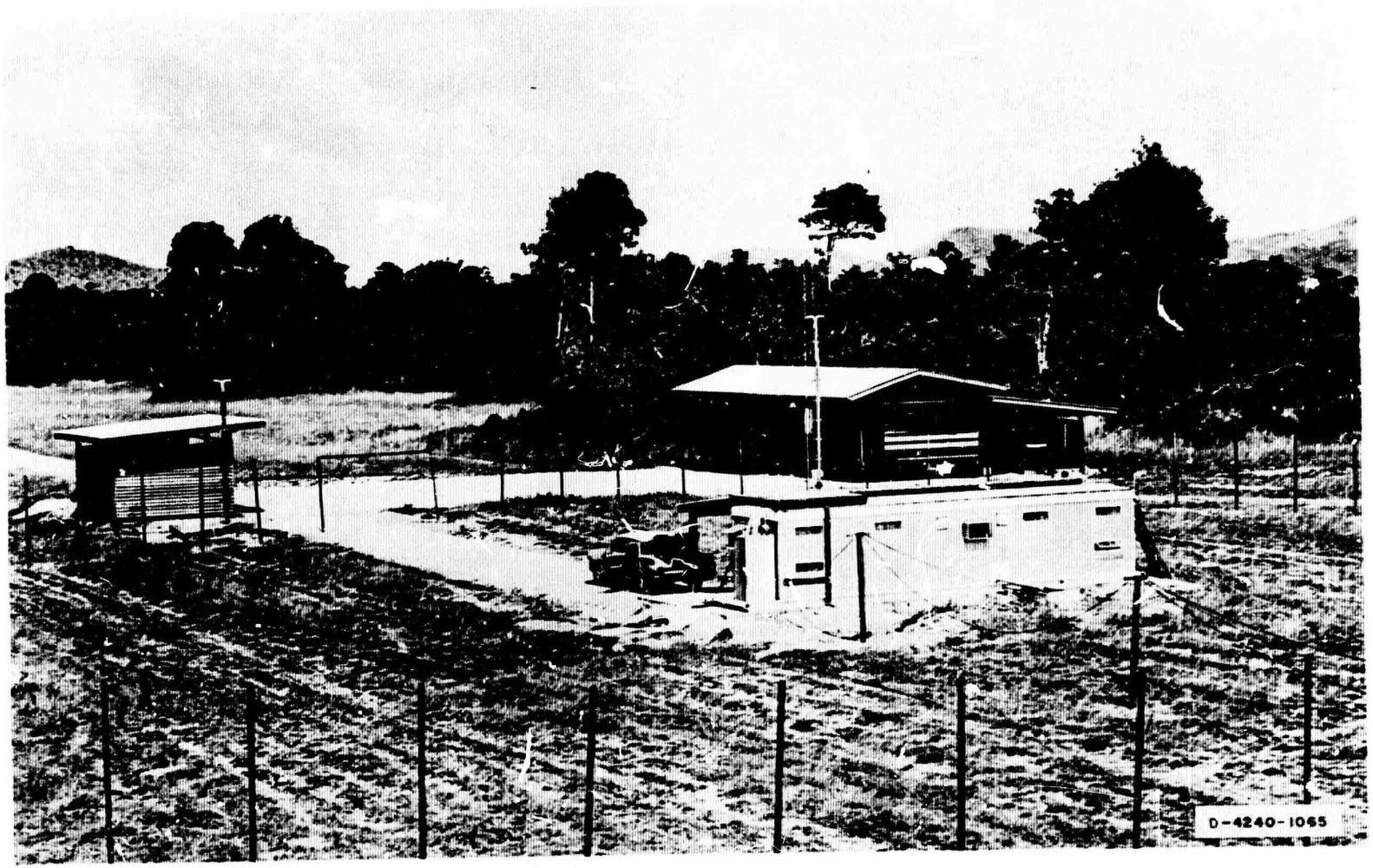

FIG. 2 VIEW OF GROUND PLANE, ANTENNA, AND EQUIPMENT VAN

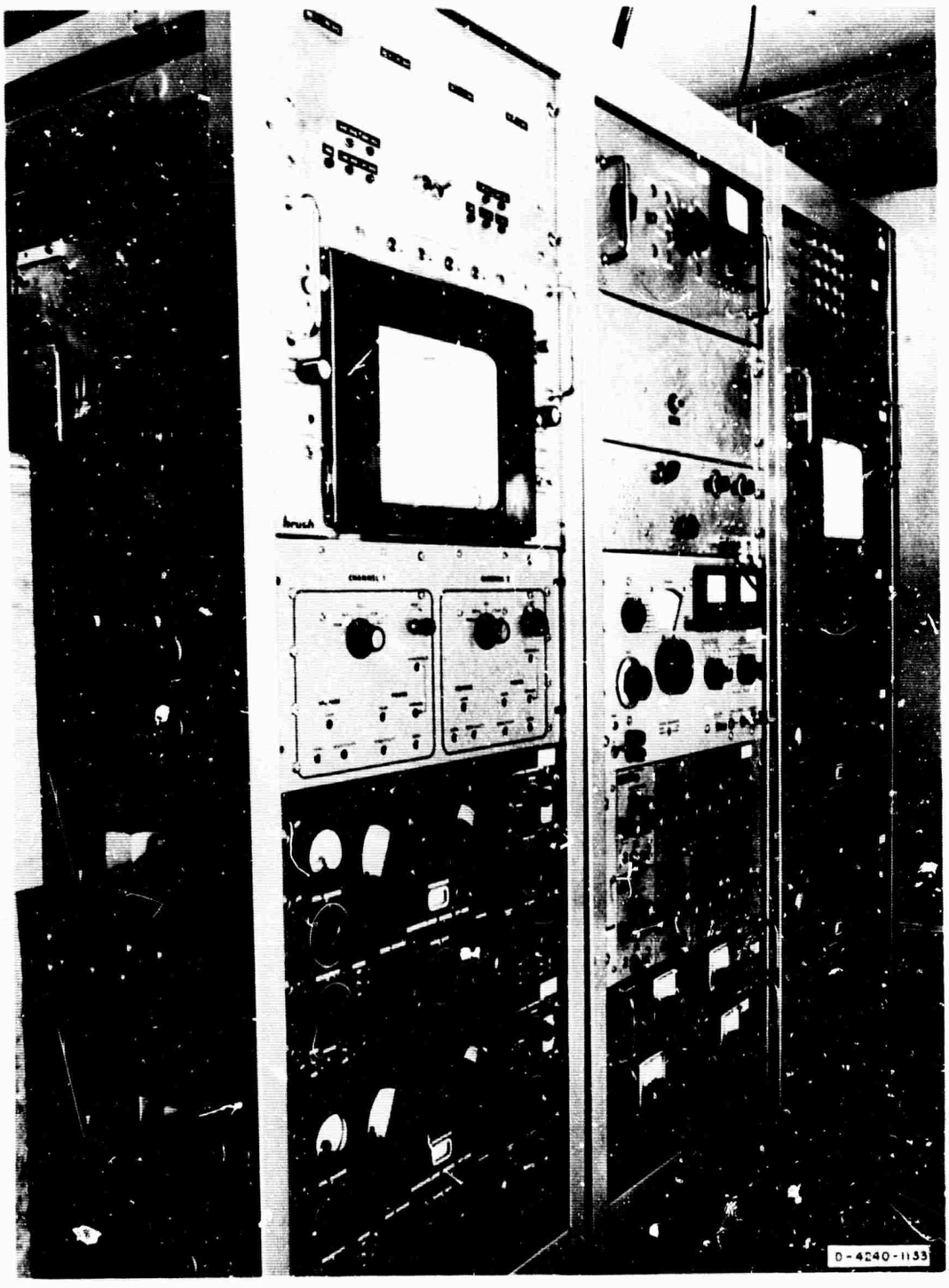

FIG. 3 EQUIPMENT, SOUTH SIDE, LAEM CHABANG

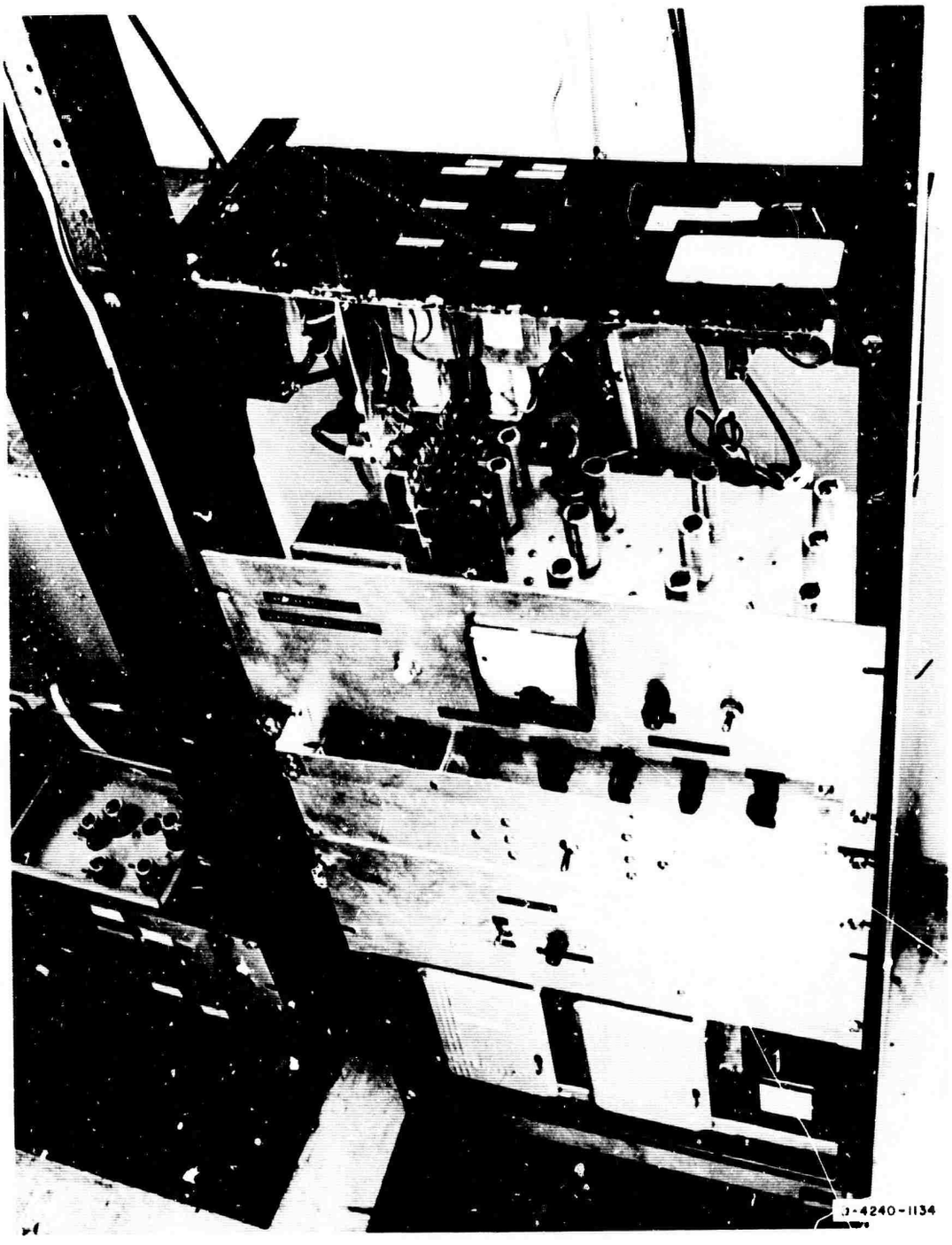

FIG. 4 EQUIPMENT, NORTH SIDE, LAEM CHABANG

Analysis [24] of such data should then provide noise characteristics needed in predicting the quality of radio communication to be expected in Thailand at any particular time with any given set of equipment parameters (frequency, transmitter power, antenna efficiencies, receiver sensitivity, type of modulation, etc.). This will permit more accurate design of communication systems to provide any specified degree of communication reliability.

II PRINCIPLES OF OPERATION

A. General

The basic purpose of the ARN-3 equipment is to measure on an absolute basis the noise in narrow bands centered at specified frequencies in the VLF, LF, MF, and HF bands. The equipment must provide amplification over a wide dynamic range with an internal noise level that is small compared with the minimum atmospheric noise to be measured. The overall specifications for the equipment are given in Table I.

The equipment has four channels, each of which accepts a 200-Hz band of noise at either an LF or an HF center frequency. In each channel outputs are recorded of average power and average envelope voltage. From these the amplitude probability distribution of the noise can be determined.[24]

Calibration consists of comparing the power level at the input terminals with a "standard" noise diode output, and then measuring the antenna efficiency. The procedure is described in detail in Sec. III-C. The theory is discussed in Appendix A.

The purpose of the Lightning Flash Analyzer (LFA) portion of the equipment is to record the incidence of pulses of various levels induced on the standard antenna in two bands centered at ELF and VLF. Enough data exist, from previous research, to establish a statistical correlation between pulses in these two bandwidths and the geographical distribution of lightning strokes near the equipment.

The overall system is shown in simplified form in Fig. 5, the Functional Block Diagram The standard antenna consists of a vertical whip 21.75 feet (6.6294 m) tall above a ground plane of 90 wires extending outward 100 feet (200-foot-diameter circle). The impedance of this antenna* is plotted in Fig. 6. The signal from this is isolated

---

* Supplied by Mr. W. Q. Crichlow.

Table I

EQUIPMENT SPECIFICATIONS

Packaging:	Three standard five-foot relay racks and two seven-foot relay racks.
Power Requirement:	115 volt, 60 Hz, 20 ampere; isolated (see text).
Frequencies:	HF, 4 channels each tunable 0.53 to 54 MHz, normally tuned to 0.53, 2.3, 5.0, and 10.0 MHz respectively. LF, 4 fixed-frequency converters accepting 160, 27, 13, and 6 kHz respectively.
Band-Pass:	HF, 200 Hz normal operation (adjustable in steps up to 13 kHz). LF, 200 Hz. LFA; ERA band 100 Hz to 2500 Hz; CCIR band 2 kHz to 50 kHz.
Sensitivity:	HF, -97 dBm, LF, -46 dBm, LFA, 1-volt, 3-volt, and 10-volt thresholds.
Time Constants:	Power integration, 0.5 sec, 5 sec, or 500 sec. Voltage integration, 0.1 sec, 1 sec, or 100 sec. LFA, 0.6 sec dead time.
Dynamic Range:	40 dB (30 dB on chart) plus 70 dB attenuation in 10-dB steps.
Antenna:	21.75-foot telescoping whip, 1.5 inch diameter at base with ground plane consisting of 90 radials of #12 copperweld wire each 100 feet long, equally spaced.
Ambient Temperature:	18 to 24°C, 22°C nominal (65 to 75°F).
Outputs:	Integrated power and voltage in 4 channels (chart recorded). Count of number of impulses above 1, 3, and 10 volts in each of 2 bands each half hour (photograph).
Timing and Switching:	Internal time standard with power amplifier to drive clocks and recorders. Switching of channels available each 15 minutes or each 30 minutes. Photograph of LFA taken automatically each 30 minutes or each hour.

BLANK PAGE

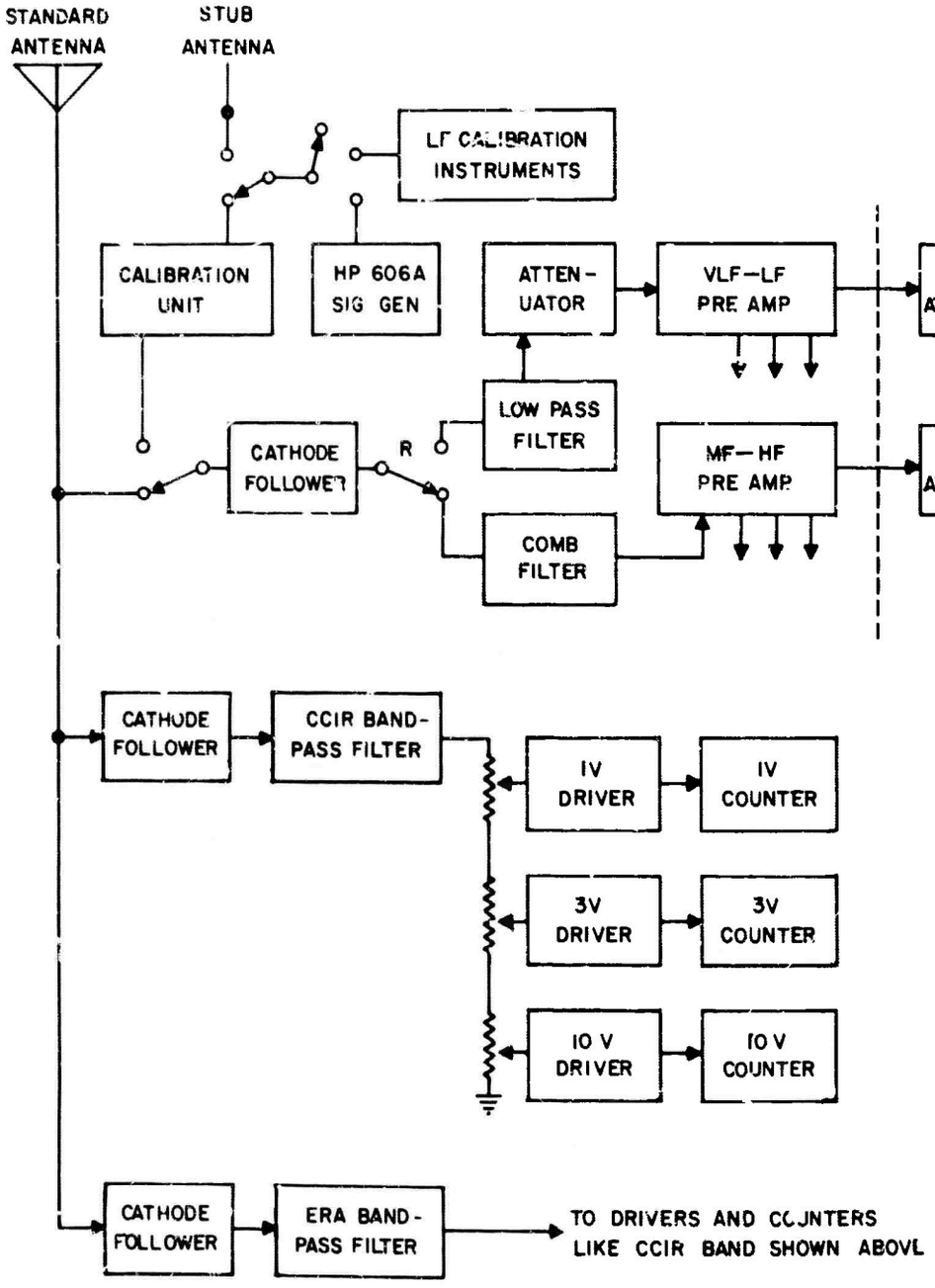
STANDARD ANTENNA
STUB ANTENNA
LF CALIBRATION INSTRUMENTS
CALIBRATION UNIT
HP 606A SIG GEN
ATTEN-UATOR
VLF-LF PRE AMP
STEP ATTENUATOR
VLF-
CONVER
LOW PASS FILTER
CATHODE FOLLOWER
R
MF-HF PRE AMP
STEP ATTENUATOR
SP-600
FRONT
COMB FILTER
CATHODE FOLLOWER
CCIR BAND-PASS FILTER
IV DRIVER
IV COUNTER
3V DRIVER
3V COUNTER
10 V DRIVER
10 V COUNTER
CATHODE FOLLOWER
ERA BAND-PASS FILTER
TO DRIVERS AND COUNTERS LIKE CCIR BAND SHOWN ABOVE

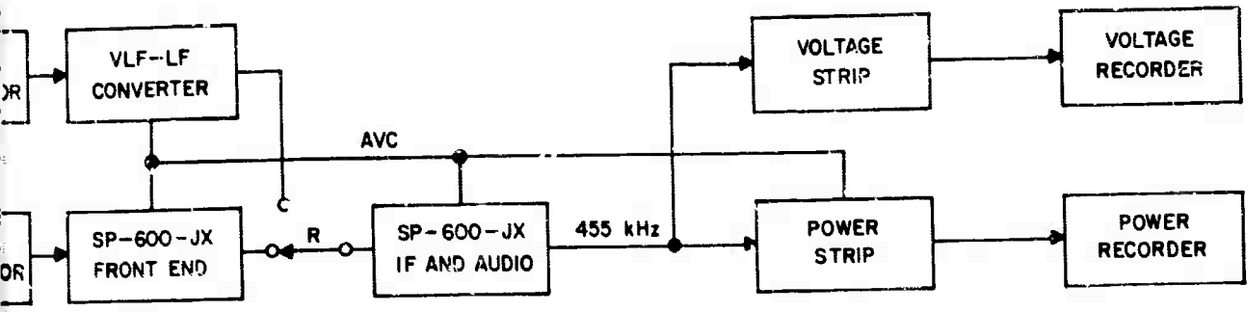

NOTES :

1 THERE ARE 3 MORE CHANNELS, IDENTICAL TO THE ABOVE, TO THE RIGHT OF DASHED LINE.

2 RELAY CONTACTS (R) ARE NORMALLY SWITCHED EACH 30 MINUTES BY THE TIMING AND CONTROL UNIT.

3 FREQUENCY ASSIGNMENTS ARE AS FOLLOWS :

	MF-HF	VLF-LF
CHANNEL 1	530 kHz	160 kHz
CHANNEL 2	2.3 MHz	27 kHz
CHANNEL 3	5 MHz	13 kHz
CHANNEL 4	10 MHz	6 kHz

4 EACH 30 MINUTES THE LFA COUNTERS ARE DISABLED FOR 4 SECONDS WHILE FLOOD LAMPS ARE TURNED ON AND A PICTURE IS TAKEN BY THE RECORDING CAMERA. THE COUNTERS THEN AUTOMATICALLY RESET TO 0.

DB-4240-112R

FIG. 5 FUNCTIONAL BLOCK DIAGRAM

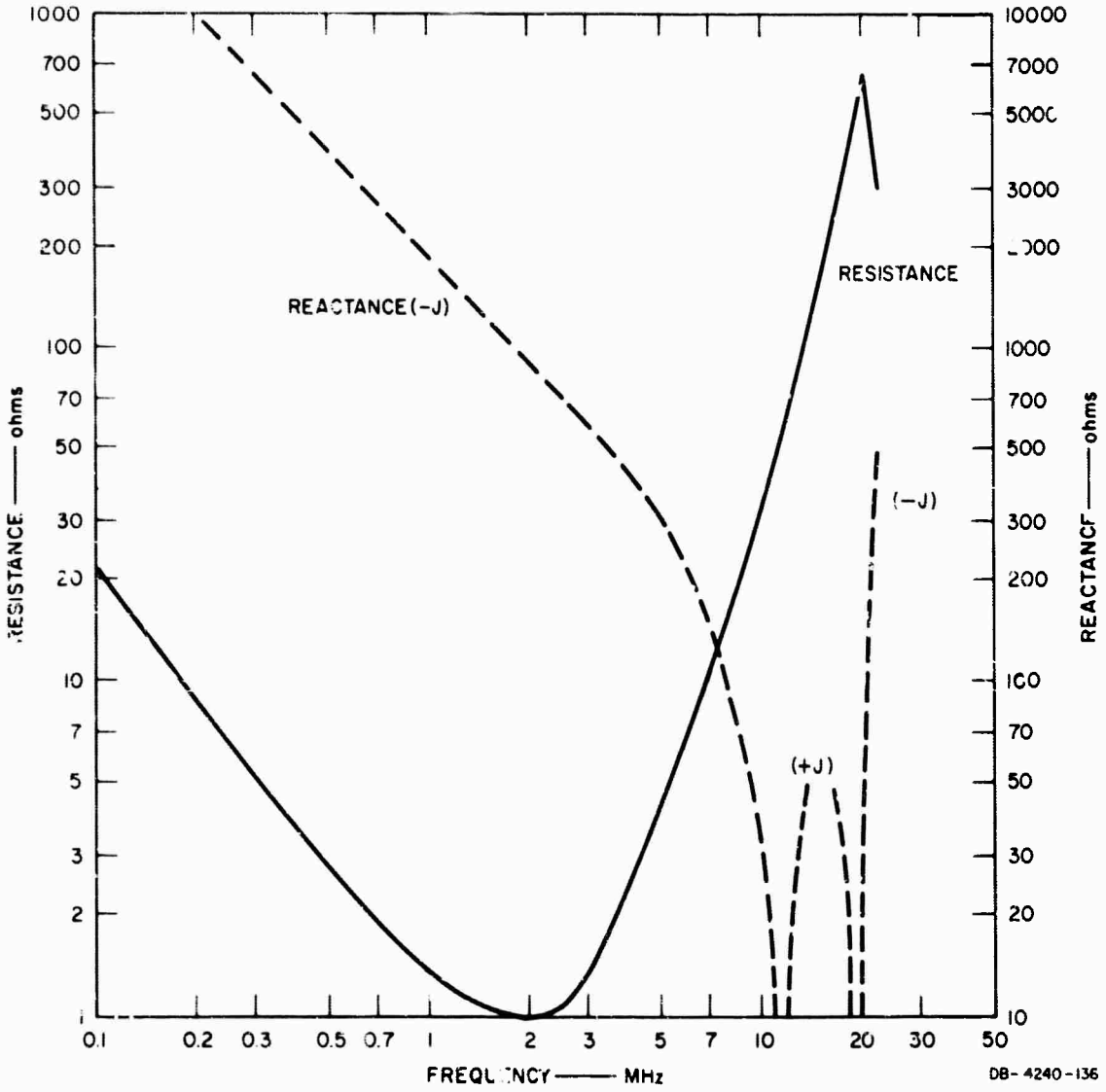

FIG. 6 IMPEDANCE OF ARN ANTENNA

from the analyzing circuits by three cathode followers. These prevent interaction between the various input filters and provide a stable impedance source for the filters. Following the first of these is a relay which selects a signal path for low-frequency (6 kHz to 160 kHz) signals or for high-frequency (0.5 MHz to 10 MHz) signals. The high-frequency signal goes through a comb filter--a four-frequency band-pass filter--having response peaks at 0.53 MHz, 2.3 MHz, 5 MHz, and 10 MHz. The value 0.53 MHz is used rather than 0.5 because this is the low-end tuning limit of the SP-600-JX receiver, and 2.3 MHz is used rather than 2.5 MHz because of strong local interference at 2.5 MHz.

After the filter, the signal goes into a transistorized preamplifier which amplifies the signal and provides four outputs at 51 ohms impedance. These feed into four attenuators which provide 10-dB steps of attenuation from 0 to 70 dB (only one is shown in Fig. 5). The outputs of the attenuators connect to the inputs of the SP-600-JX receivers. These receivers, which cover the frequency range of 0.53 to 54 MHz, have been modified to permit breaking into the AVC bus and to permit signal injection (at 455 kHz) directly into the IF strip. These receivers provide a buffered 455-kHz output from the IF strip which feeds both the voltage strip and the power strip in the function shelf. In the power strip the parabolic amplifier and the power detector derive a dc output proportional to the average input power. This is amplified and recorded and is also fed back to the receiver as an AVC voltage with a long (500-second) time constant. The loop amplification is sufficient to keep the average output of the receiver constant within 0.1 dB over approximately a 40-dB range of input signal. The 455-kHz signal going into the voltage strip is detected, amplified, and recorded.

In the low frequency position of the relays the signal goes first through a low-pass filter with a cut-off frequency of 260 kHz, and then (since low-frequency noise is frequently large in amplitude) through an attenuator and into the low-frequency preamplifier. This has four outputs of approximately 100 ohms impedance which feed the four low-frequency converters (for 6 kHz, 13 kHz, 27 kHz, and 160 kHz) through four attenuators. The converters are equivalent to the front ends of

the SP-600-JX receivers and provide 455-kHz outputs which are applied to the inputs of the IF strips.

The other two cathode followers feed band-pass filters and pulse-height analyzer counters. The band-pass of the "CCIR" filter centers on 10 kHz and is down 3 dB at 2 kHz and 50 kHz. The "ERA" filter centers on 500 Hz and is 3 dB down at 100 Hz and 2500 Hz. These filters each terminate in a net of three potentiometers which each feed a counter channel. Each channel consists of an amplifier, a phase splitter and detector, a monostable flip-flop, and a mechanical counter with its drive amplifier. Within each frequency band the channels are set to 1-volt, 3-volt, and 10-volt threshold levels. These thresholds are established by discharging a capacitor charged to the specified voltage into the antenna and setting the input potentiometer so that the counting threshold is established at that voltage. The same timing and control circuitry that switches the ARN-3 equipment from HF to LF each 30 minutes causes a recording camera (16 mm) to take a picture of the counters each 30 minutes, after which they are reset to zero.

During calibration of the equipment, the Calibration Unit provides source impedances equivalent to that of the standard antenna at each frequency. It also contains the reference noise diode and provision for injecting signals from either the HF or LF signal generators.

A list of the units that make up the equipment is given in Table II.

B. Circuit Description

Figure 7 shows the equipment layout for the installation, Fig. 8 the signal path interconnections, Fig. 9 the primary ac power distribution, and Fig. 10 the distribution of secondary power and control voltages.

The signal connections follow the functional block diagram (Fig. 5) very closely (see Fig. 8). In this and similar diagrams, symbols such as J1 of U-6 indicate coaxial connectors for high-impedance, low-capacity cable; symbols such as J6 of U-7 indicate BNC type coaxial connectors; symbols such as J4 of U-4 indicate audio (telephone) jacks and plugs; and, where a complex connector is shown (like J10 of U-10), a simplified

Table II

UNITS COMPRISING THE ARN-3 AND LFA COMPLEX

Unit		Fig. No.	Page
1	Low-Frequency Converters	22	42
20	Power Supply for U-1	23	43
2 and 14	* Brush Recorders	See manual and Fig. 25	47
3 and 15	Function Shelves	24	Back cover pocket
4, 5, 16, and 17	* SP-600-JX Receivers	See manual and Fig. 19	38
6	Calibration Unit	28	51
7	Input Panel	15	32
8	Speaker Panel	26	48
9	* HP 606A Signal Generator	See manual	
10	* Brush Recorder Drive Amplifiers	See manual	
19	* Power Supply for U-10	See manual	
11	* Kepco Power Supply, 300V neg.	See manual	
12	* Kepco Power Supply, 300V pos.	See manual	
13	Attenuator Panel	18	36
18 and 24	* GR Automatic Line Voltage Regulators	See manual and Fig. 12	25
21	Recording Camera Control Unit	31	57
22	Timing and Control Unit	14	28
23	Relay and Isolator Filament Power Supply	13	26
25	* Recording Camera	See manual and Fig. 32	58
26	Display Panel, LFA	30	55
27	Counter Drive Unit, LFA	29	53
28	Line-Voltage Range Limiter	11	23
29	* LF Calibration Instruments	27	50
30	Low-Frequency Converter, Portable	C-5	121
31	Power Supply for U-30	C-6	122

* These units have instruction manuals supplied by the manufacturer. These manuals are to be considered part of this manual.

U – 1 LOW-FREQUENCY CONVERTERS	U – 6 CALIBRATION UNIT	U – 13 ATTENUATOR PANEL
U – 2 RECORDER CHANNELS 1 & 2 BRUSH MODEL RD 2642 – 00	U – 7 INPUT PANEL	U – 14 RECORDER CHANNELS 3 & 4 BRUSH MODEL RD 2642 – 00
	U – 8 SPEAKER PANEL	
U – 3 FUNCTION SHELF CHANNELS 1 & 2	U – 9 SIGNAL GENERATOR HEWLETT – PACKARD MODEL 606A	U – 15 FUNCTION SHELF CHANNELS 3 & 4
U – 4 RECEIVER CHANNEL 1 HAMMARLUND SP – 600 – JX	U – 10 RECORDER PEN DRIVE BRUSH MODEL RA 5680 – 01 WITH RD 5211 – 13 AMPLIFIERS	U – 16 RECEIVER CHANNEL 3 HAMMARLUND SP – 600 – JX
U – 5 RECEIVER CHANNEL 2 HAMMARLUND SP – 600 – JX	U – 11 : POWER SUPPLY, 300V NEG. KEPCO MODEL HB 4 AM	U – 17 RECEIVER CHANNEL 4 HAMMARLUND SP – 600 – JX
	U – 12 : POWER SUPPLY, 300V POS. KEPCO MODEL SM – 325 – 1M	

8 4
2642 — 00

HELF
8 4

3
600 — JX

R
4
- 600 — JX

SOUTH WALL ARN - 3
INSTALLATION (LAEM CHABANG).
LINE REGULATOR, U — 18, POWER SUPPLY FOR RECORDER PEN DRIVER AMPLIFIERS, U — 19, AND POWER SUPPLY FOR LOW FREQUENCY CONVERTERS, U — 20, ARE BEHIND RACKS.
SCALE : $\frac{1}{4} = 1\frac{3}{4}$

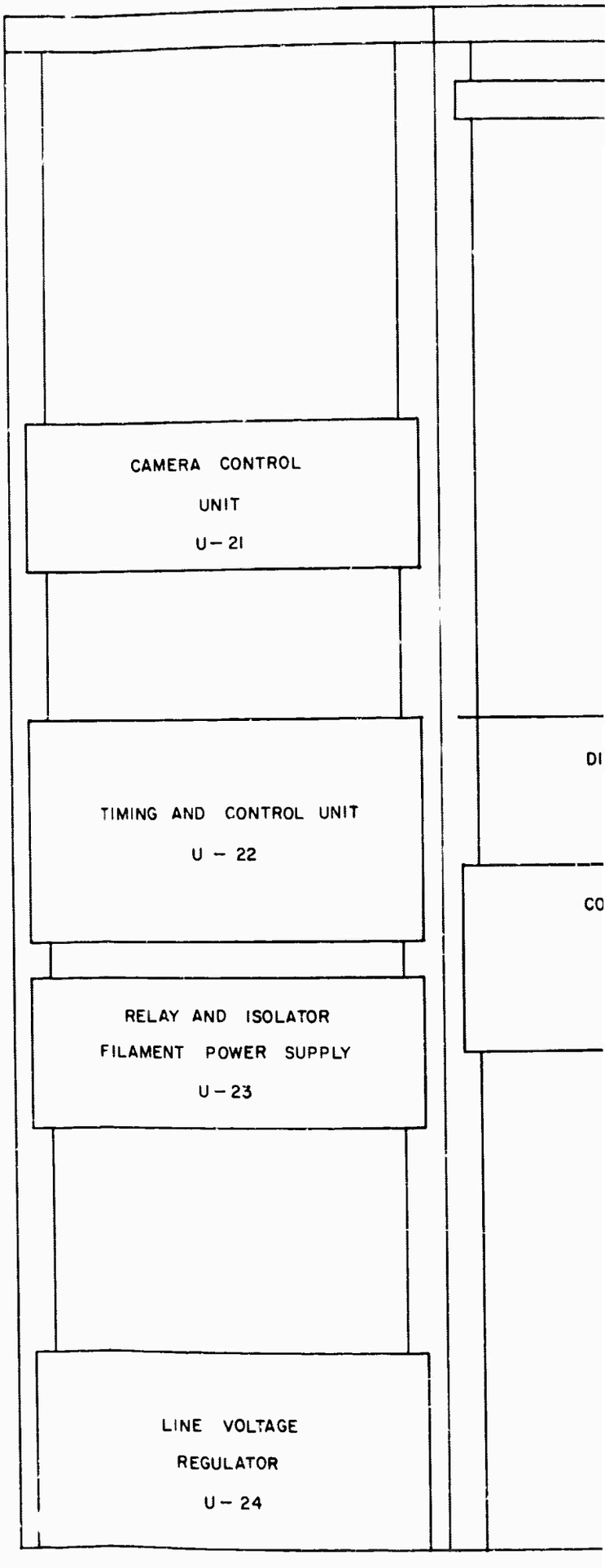

B

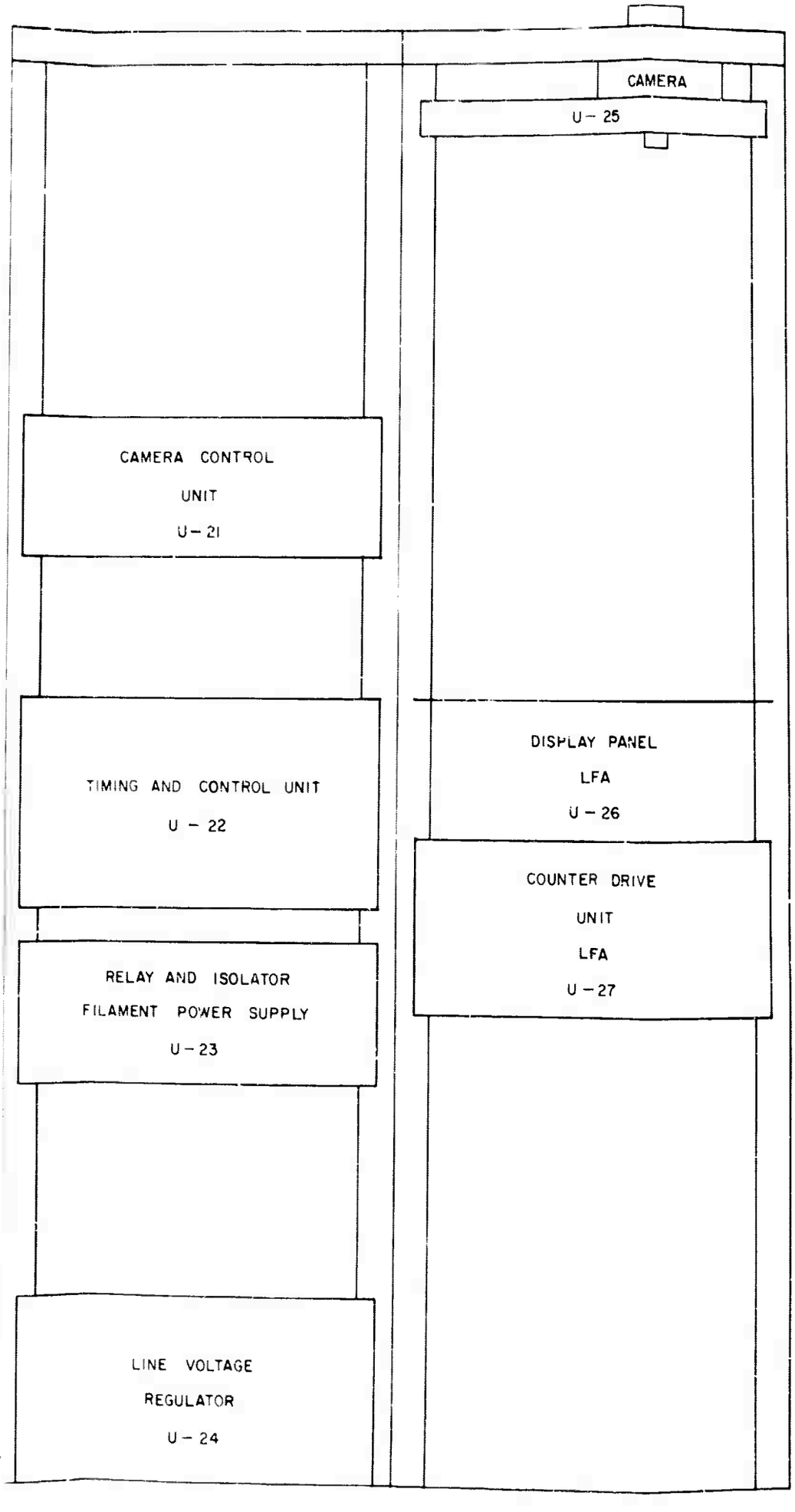

NORTH WALL ARN – 3 AND LFA INSTALLATION. LINE VOLTAGE RANGE LIMITER, U–28, AND LF CALIBRATION INSTRUMENTATION, U – 29, NOT SHOWN.

SCALE : $\frac{1}{4} = 1\frac{3}{4}$

FIG. 7 EQUIPMENT LAYOUT, LAEM CHABANG

DB-4240-88

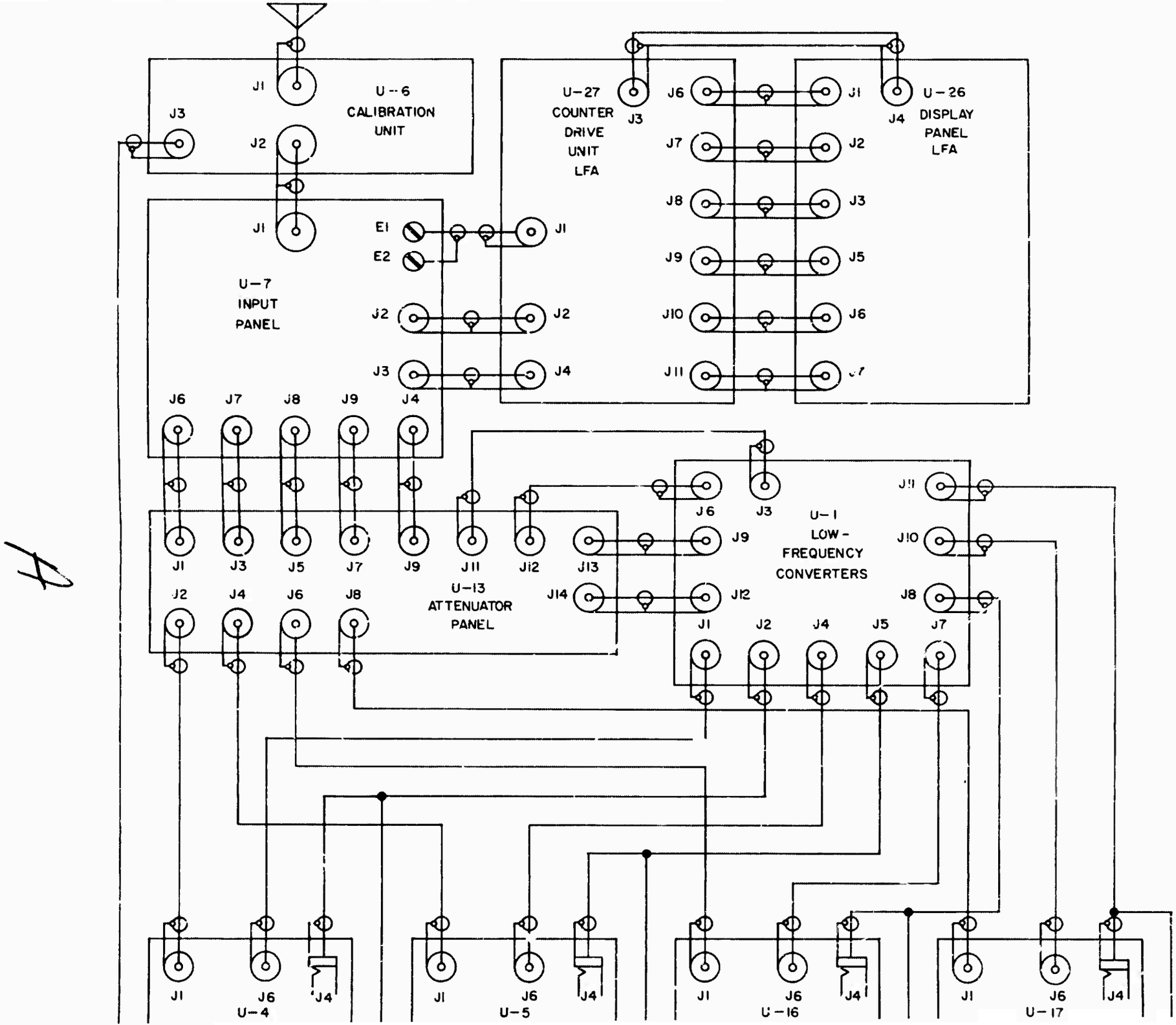
U-6
CALIBRATION
UNIT
J1
J2
J3
U-27
COUNTER
DRIVE
UNIT
LFA
J3
J6
J7
J8
J9
J10
J11
J1
J2
J3
J5
J6
J4
U-26
DISPLAY
PANEL
LFA
U-7
INPUT
PANEL
E1
E2
J1
J2
J3
J4
J6 J7 J8 J9 J4
J1 J3 J5 J7 J9 J11 J12 J13
J2 J4 J6 J8
U-13
ATTENUATOR
PANEL
J14
J6
J3
J9
J12
J11
J10
J8
J1 J2 J4 J5 J7
U-1
LOW-
FREQUENCY
CONVERTERS
J1 J6 J4
U-4
J1 J6 J4
U-5
J1 J6 J4
U-16
J1 J6 J4
U-17

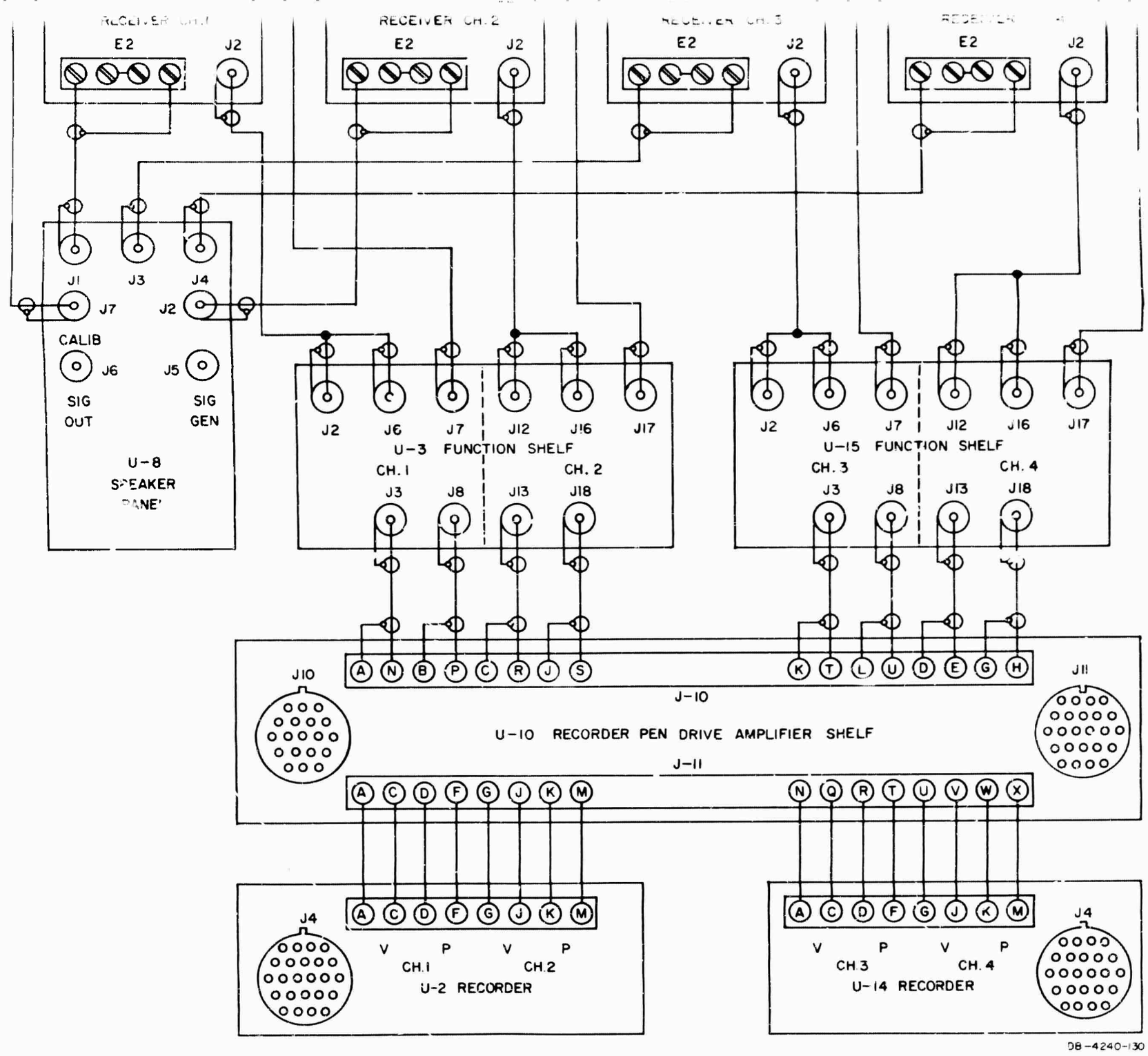

FIG. 8 SIGNAL INTERCONNECTIONS, LAEM CHABANG

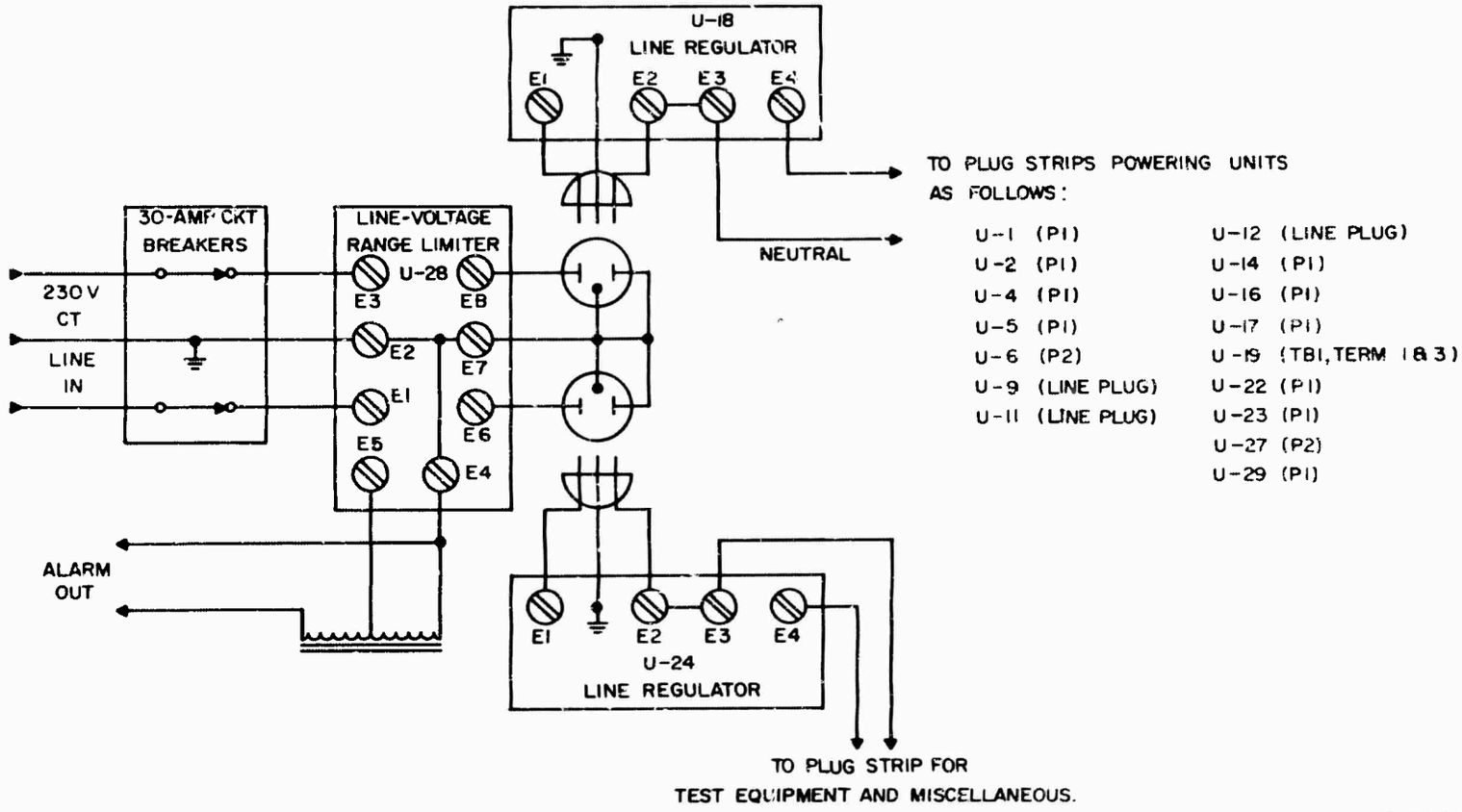

FIG. 9 PRIMARY AC POWER DISTRIBUTION, LAEM CHABANG

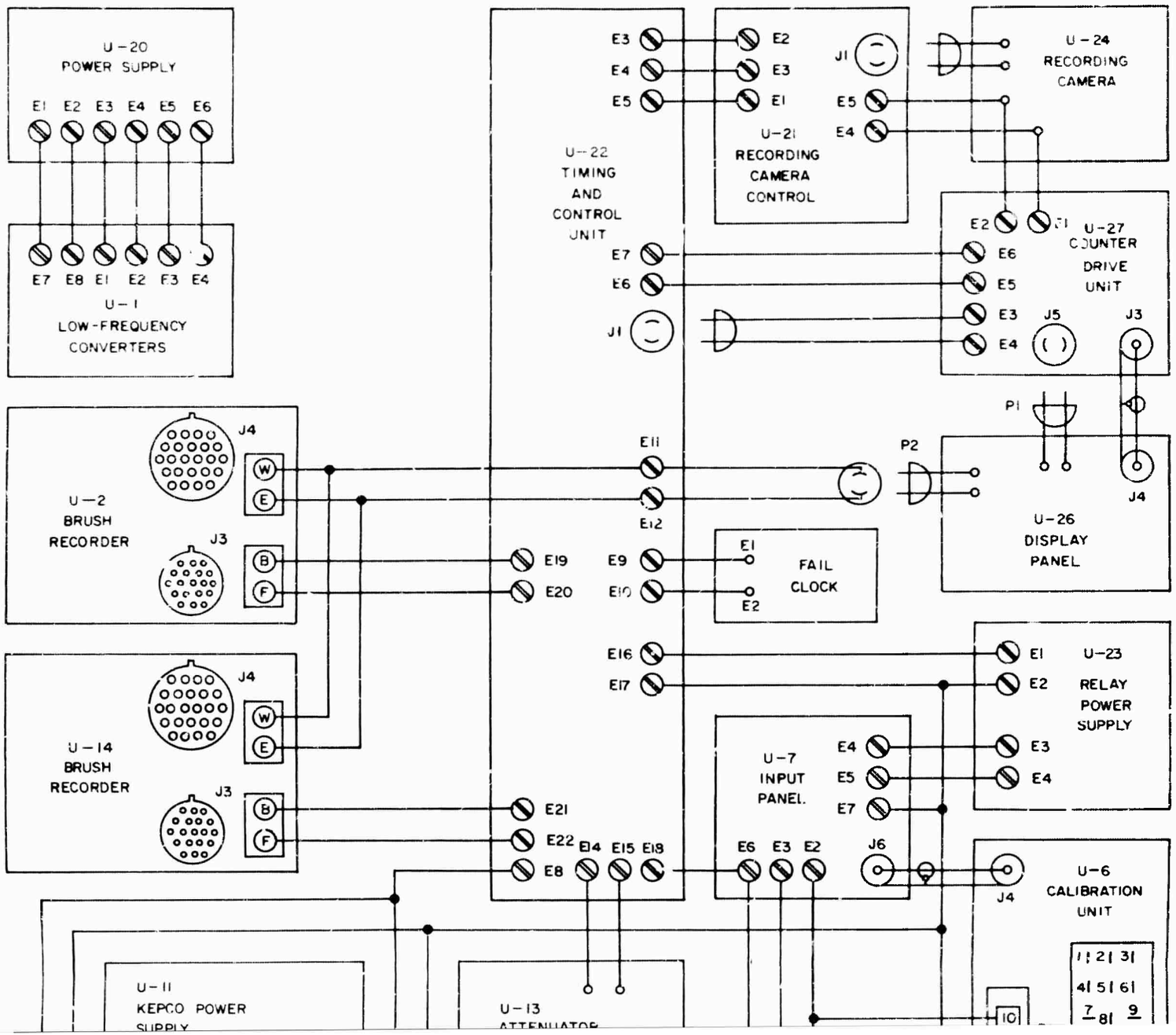
U-20
POWER SUPPLY
E1 E2 E3 E4 E5 E6
E7 E8 E1 E2 E3 E4
U-1
LOW-FREQUENCY
CONVERTERS
U-22
TIMING
AND
CONTROL
UNIT
E3
E4
E5
E7
E6
J1
E11
E12
E19
E20
E9
E10
E16
E17
E21
E22
E8
E14
E15
E18
U-21
RECORDING
CAMERA
CONTROL
E2
E3
E1
J1
E5
E4
U-24
RECORDING
CAMERA
E2
J1
U-27
COUNTER
DRIVE
UNIT
E6
E5
E3
E4
J5
J3
P1
P2
J4
U-26
DISPLAY
PANEL
E1
FAIL
CLOCK
E2
U-2
BRUSH
RECORDER
J4
W
E
J3
B
F
U-14
BRUSH
RECORDER
J4
W
E
J3
B
F
U-7
INPUT
PANEL.
E4
E5
E7
E6
E3
E2
J6
E1
U-23
RELAY
POWER
SUPPLY
E2
E3
E4
J4
U-6
CALIBRATION
UNIT
1 2 3
4 5 6
7 8 9
10
U-11
KEPCO POWER
SUPPLY
U-13
ATTENUATOR

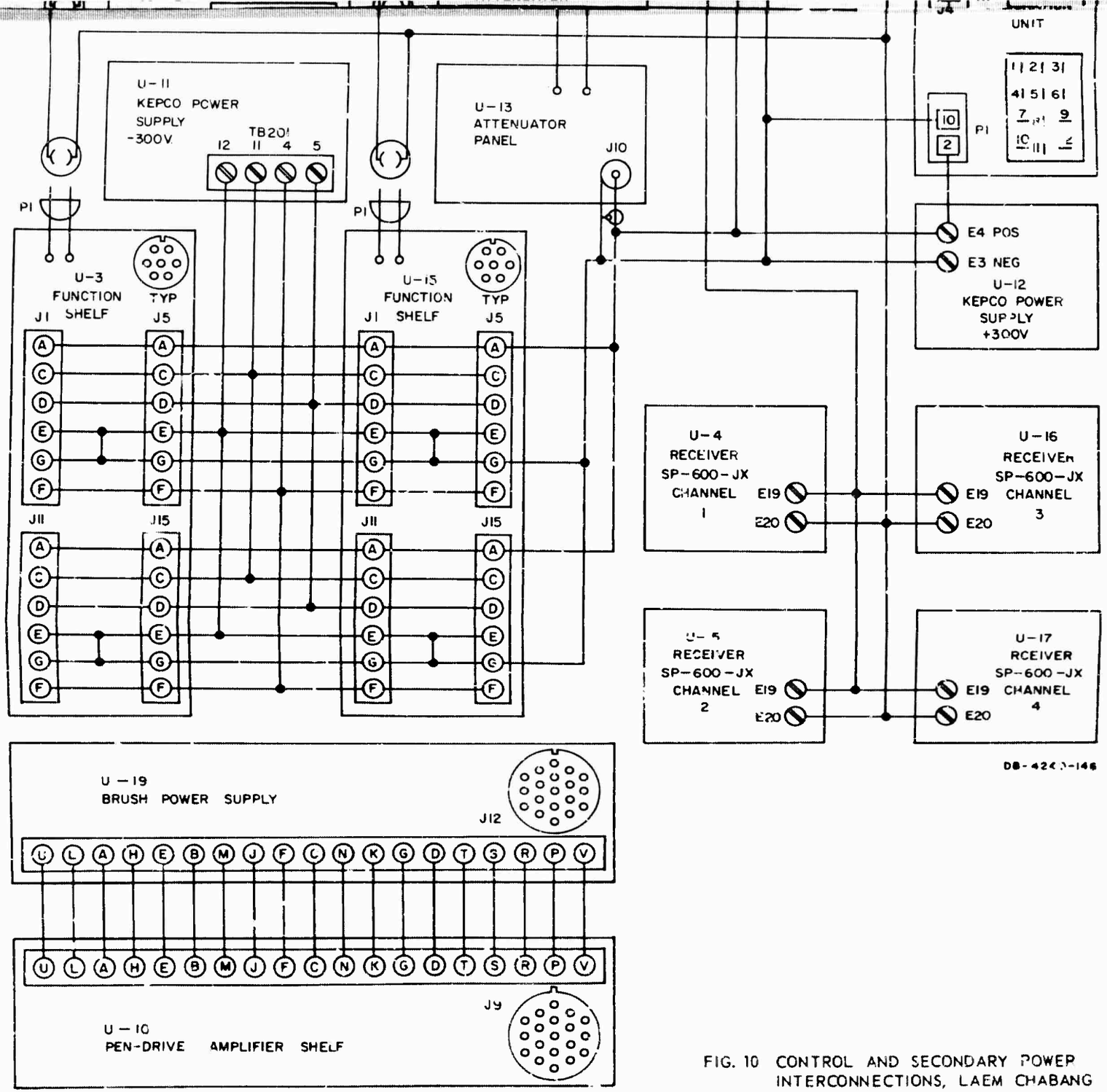

FIG. 10 CONTROL AND SECONDARY POWER INTERCONNECTIONS, LAEM CHABANG

drawing of the chassis connecter is shown with an adjacent strip showing lettered circles corresponding to the connector pin identifications. In the ANT position of the Calibration Unit function switch the signal from the antenna goes straight through to the Input Panel (U-7). From this, two outputs go to the LFA and the threshold calibrating voltage for the LFA comes in on E1-E2. The HF signals come out of U-7 on J6, J7, J8, and J9 into the attenuators, from which they go to the four receivers. The 455-kHz output of each receiver goes into the voltage and power strips in the function shelf; J2 and J12 go into the power strips, and J6 and J16 go into the voltage strips. These strips drive recorder channels, the power strip outputs are J3 and J13, the voltage strip outputs are J8 and J18, and the power strips provide an AVC voltage from J7 and J17 to the receivers and converters. The receiver audio outputs go to the speaker panel, so that an operator may identify and avoid man-made interference. This panel also provides a jack for signal injection for calibration, and attenuators for use in calibration. J4 of the input panel takes the low-frequency signal into the attenuator panel, from which it goes out through J11, J12, J13, and J14 to the low-frequency converters. These in turn have outputs (at 455 kHz) on J1, J4, J7, and J10 which go into the receiver strips at J6.

The primary power input (see Fig. 9) goes through the usual circuit-breaker panel and then through the voltage-range limiter. This is a unit that acts to remove power from the equipment before the input voltage varies beyond the corrective range (115V ± 20%) of the automatic line-voltage regulator. It also activates an alarm circuit when the equipment is shut off. When the voltage returns to the proper range the power is restored to the equipment automatically.

The control and secondary power connections (see Fig. 10) are extremely various. They include 115V ac power derived from a frequency standard and used to run clocks and recorders, dc and filament power connections to units with external power supplies, and relay power distribution.

A more detailed description of the equipment units is given in the following paragraphs. First will be considered the line-voltage range limiter, the automatic line-voltage regulators, and the main power supplies including the timing and control unit; next, the HF and IF atmospheric noise recorder equipment, followed by its calibration equipment; and finally the LFA and its recording camera.

1. Line-Voltage Range Limiter, U-28 (See Fig. 11)

This unit removes power from the equipment whenever the line voltage approaches the correction limit of the Automatic Line Voltage Regulator (see Sec. VI for further discussion). It consists of two heavy-duty relays (PR 11 AY), using two sets of contacts wired in parallel, which allow power into the equipment only when activated. They are activated only when both the dc relays (LM 11) are activated. The transformer derives its power from the incoming line and provides unregulated outputs (both positive and negative with respect to ground) and also 150-volt positive and negative regulated voltages. The cathode of each of the relay drive triodes is connected to ground. Their grids are connected to bleeder networks between the regulated and unregulated dc voltages. For the high-limit control, the positive end of the network is connected to the regulated positive voltage and the negative end to the unregulated negative voltage. The potentiometer is set so that in the normal range enough current flows through the tube to hold the relay operated, but when the input ac voltage rises to the preset point (e.g., 132V) the unregulated negative voltage becomes great enough to cause the relay to drop out. The low-limit network is connected between the regulated negative voltage and the unregulated positive voltage. Here, as the voltage drops, the unregulated positive voltage is insufficient to hold this relay in. The difference in drop-out and pick-up current of the relays provides about 5 volts (at the ac line) of hysteresis in the relay action which prevents hunting or chattering at the range limits. When the power-line relays drop out, they apply the input voltage to an alarm light and an external alarm circuit which rings a bell in the living quarters of the maintenance operator.

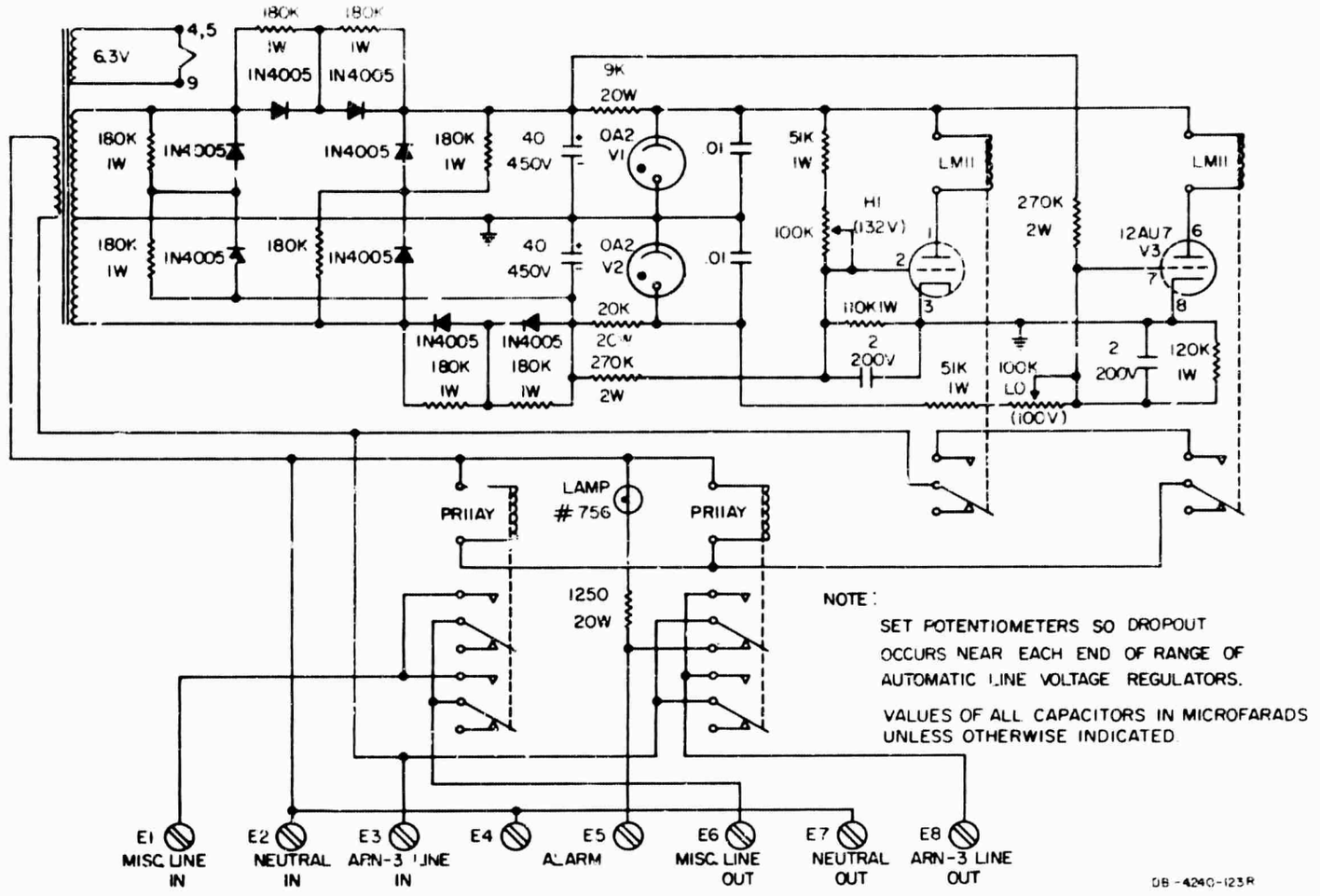

FIG. 11 LINE-VOLTAGE RANGE LIMITER, U-28

2. General Radio Automatic Line-Voltage Regulators Model 1570-ALS 15; U-18 and U-24

A drawing (Fig. 12) is provided, showing the connections used for the options required for this equipment (115 volt, single phase, ±20% range). The manual for this equipment explains its operation.

3. Kepco Power Supplies, Models HB-4-AM (U-11) and SM-325-1M (U-12)

U-11 is used to furnish a regulated negative 300 volts to the Function Shelves (U-3 and U-15). U-12 supplies regulated positive 300 volts to the Function Shelves (U-3 and U-15), to the Calibration Unit (U-6), to the Input Panel (U-7), and to the Attenuator Panel (U-14). The manuals for these power supplies adequately describe their operation.

4. Relay and Isolator Filament Supply, U-23 (See Fig. 13)

This supply provides 0.35 amp at 24 volts dc unregulated for relay operation, and 12.6 volts regulated to heat the filaments of the cathode followers which isolate the antenna inputs in the Input Panel.

5. Timing and Control Unit, U-22 (See Fig. 14)

This unit contains a 60-cycle frequency-stable source to provide 110-volt power ("Time Power") to run clocks and recorders, and also contains various timing and control functions. The stable 60-cycle (±0.075%) source is a Fork Model YC-60-AA tuning fork, with a following power amplifier. A separate regulated 12-volt supply is provided for the tuning fork. Its output is amplified by the two-stage 12AU7 driver which is transformer-coupled to the class AB_2 push-pull power amplifier. This provides up to 50 watts of timing power output. The output voltage level may be read at test points 5 and 6 and set by the SET VOLTS potentiometer. The 400 volts dc as read between TP-1 and TP-3 should be within 15 volts of 400 volts, and can be adjusted (with power turned off) by the variable 300-ohm resistor. The bias voltages as read between TP-2 or TP-4 and TP-3 should be set within 1/2 volt of -28 volts by means of the BIAS potentiometers. Note that there is a 30-second time delay in applying the full 400 volts when the equipment is first turned on. The settings of the bias voltage, the output ac voltage, and the 400 volts of the

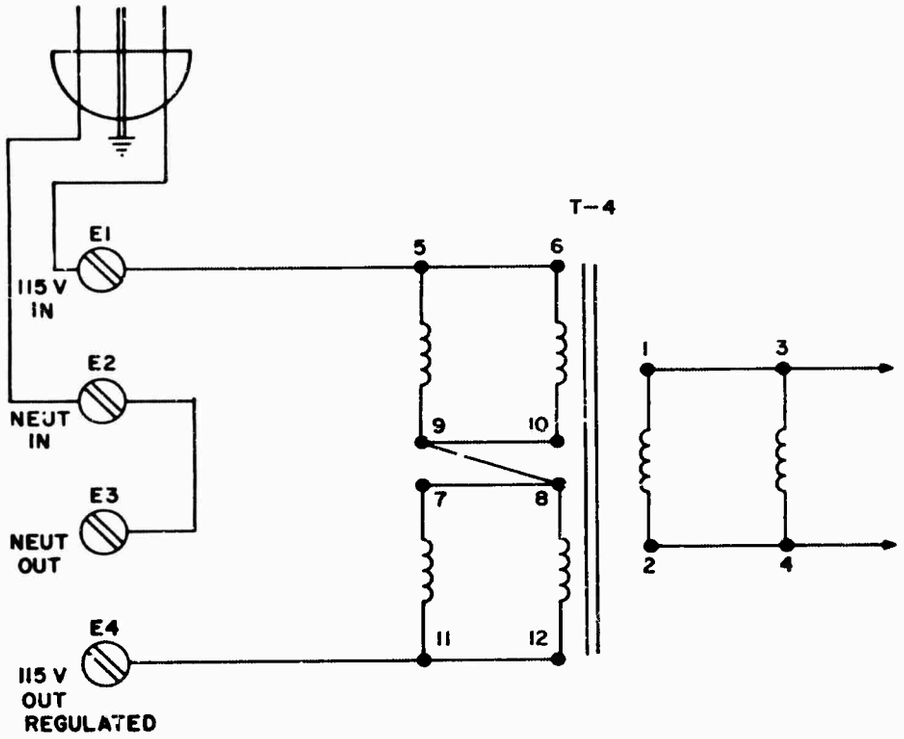

FOR DETAILED SCHEMATIC DIAGRAM SEE GENERAL RADIO OPERATING INSTRUCTIONS FOR TYPE 1570-AS15 AUTOMATIC LINE-VOLTAGE REGULATOR.

DB-4240-98

FIG. 12 LINE-VOLTAGE REGULATOR CONNECTIONS, U-18 AND U-24

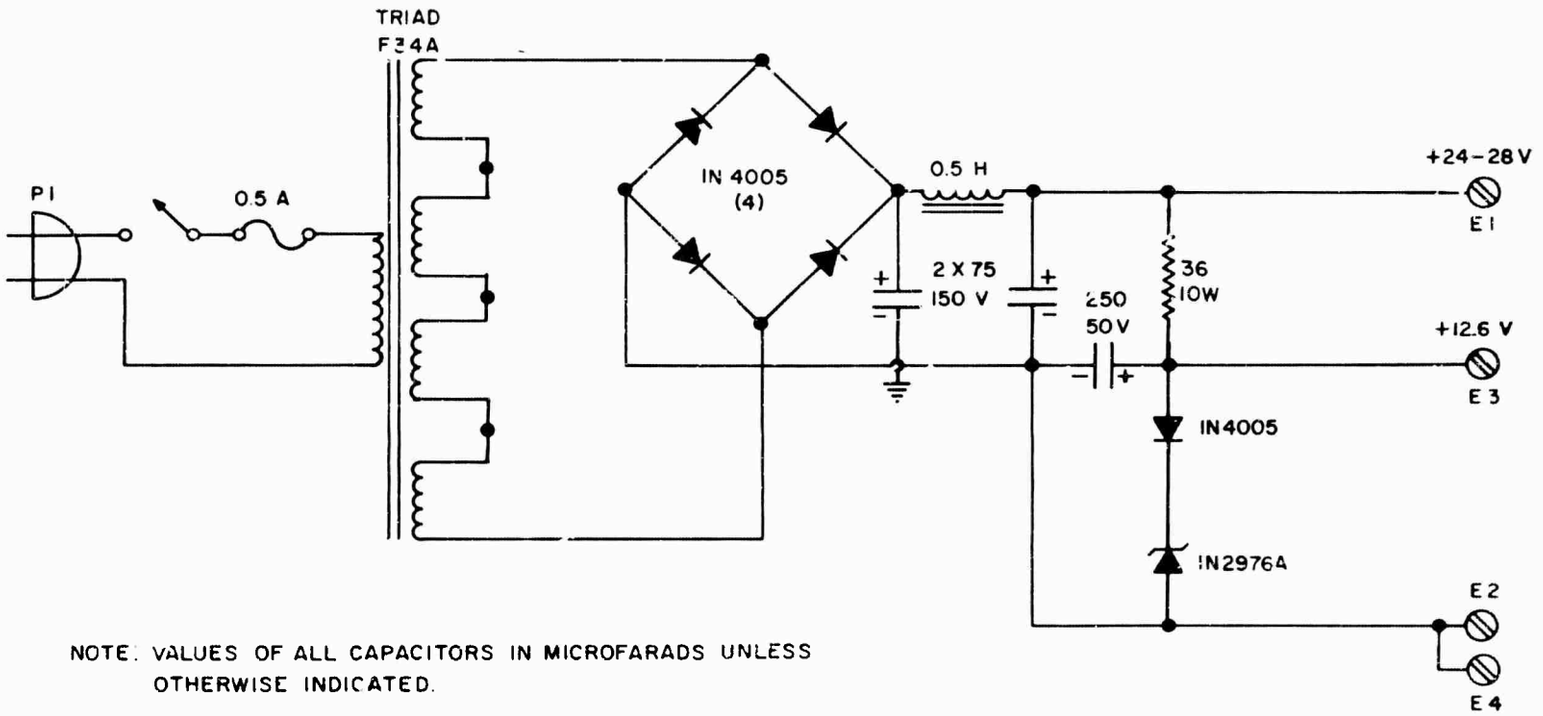

FIG 13 RELAY AND ISOLATOR FILAMENT POWER SUPPLY, U-23

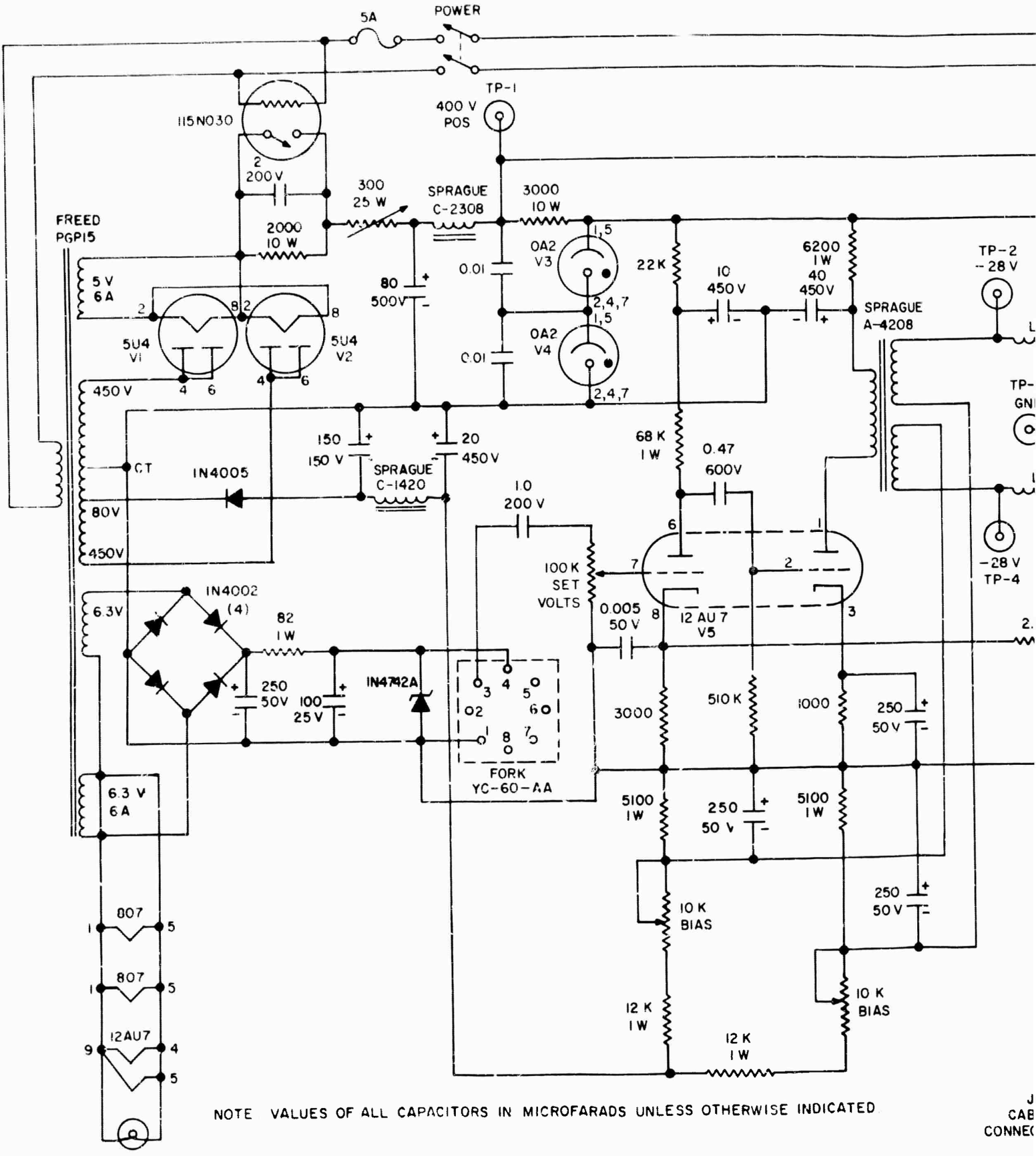

NOTE VALUES OF ALL CAPACITORS IN MICROFARADS UNLESS OTHERWISE INDICATED

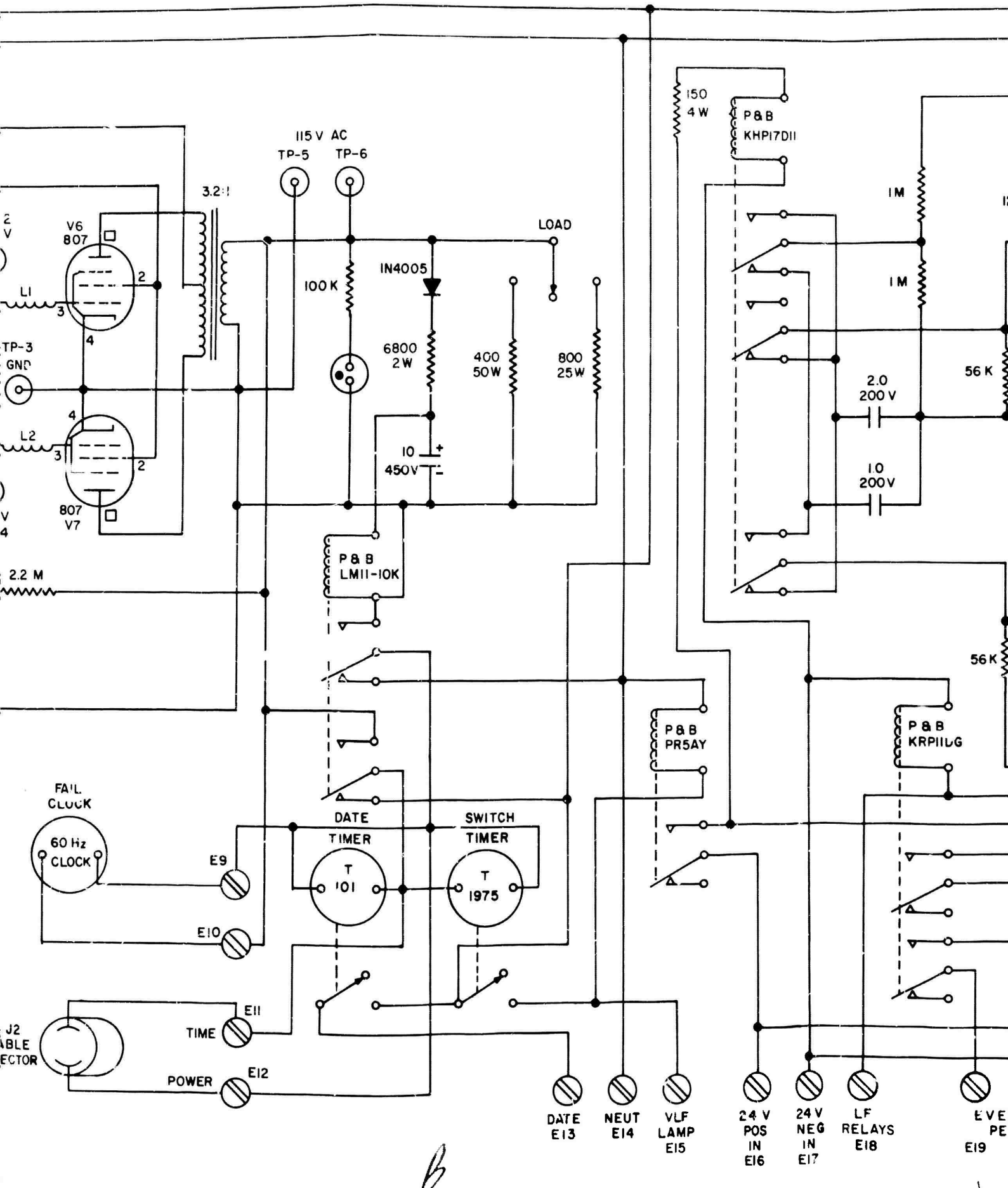
115 V AC
TP-5
TP-6
3.2:1
V6
807
L1
TP-3
GND
L2
807
V7
100 K
IN4005
6800
2W
400
50W
800
25W
LOAD
10
450V
2.2 M
P&B
LM11-10K
150
4W
P&B
KHP17D11
1M
1M
2.0
200V
1.0
200V
56K
56K
P&B
PR5AY
P&B
KRP11DG
FAIL
CLOCK
60 Hz
CLOCK
E9
E10
DATE
TIMER
T
101
SWITCH
TIMER
T
1975
E11
TIME
POWER
E12
DATE
E13
NEUT
E14
VLF
LAMP
E15
24 V
POS
IN
E16
24 V
NEG
IN
E17
LF
RELAYS
E18
E19

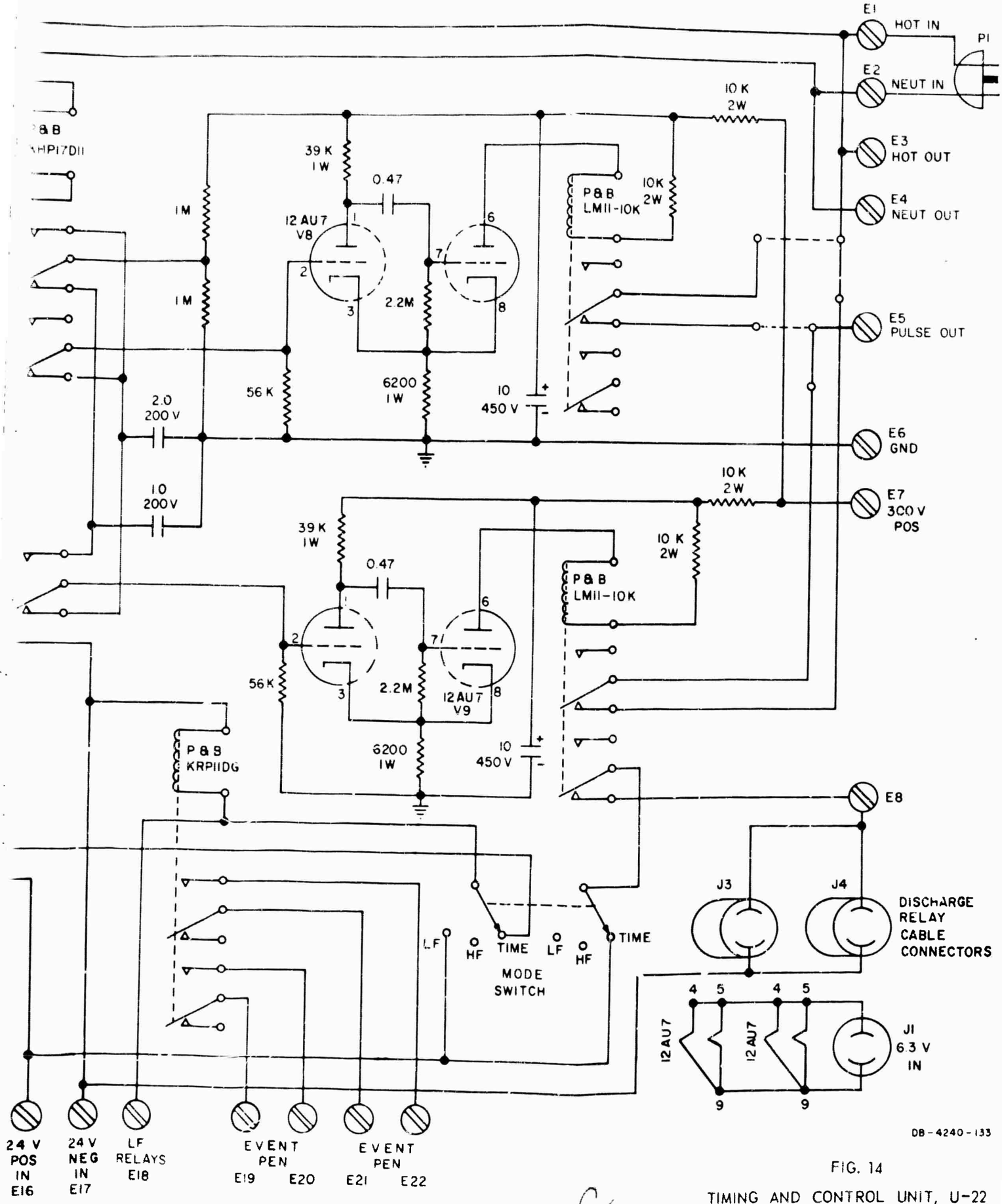

FIG. 14

TIMING AND CONTROL UNIT, U-22

power supply interact, so no large changes should be made in any of these settings without looking for possible trouble. Any change in settings calls for checking the other test points and settings. These test points should be checked at least weekly.

At the output of the power amplifier there is a LOAD switch. The Brush Recorder motors powered by this unit look like an 800-ohm load each, so if either is to be removed from the circuit for some time this switch should be put in the 800-ohm position so that the output voltage will remain constant. The 400-ohm position is suitable for bench testing or for operation of the clocks only. Also across the output is a neon indicator lamp and a rectifier and filter circuit. This rectifier powers a dc relay so arranged that if the Time Power output voltage drops below 90 volts the relay will drop out and provide power to the time circuits from the generator line. There is also a synchronous clock across the amplifier output which will give an indication of the time when the amplifier failed, since the opening of the relay removes its power. Note that this is possible only because the time power source uses a wired, not chassis, ground.

The Time Power output provides power for the clock motors in the two internal time switches (Intermatic Types T 101 and T 1975) and externally to the Brush Recorder slow-speed drive and timing marker motors and (through J2) to the clock on the LFA display panel. The T 101 Date Timer provides an output once each 24 hours which can be used in future to activate a calendar change on the LFA display panel (this is presently done by the operator) and to activate a date mark on the recorders. The T 1975 switch timer is normally set to be on for 30 minutes, then off for 30 minutes, alternately. It can be set for any arrangement down to 15-minute intervals. When it switches to "on" it lights the VLF lamp on the attenuator panel and powers the PR5AY relay. When this relay is activated (if the MODE switch is in TIME position) it applies the 24-volt relay power to the LF relays in the filter on the Input Panel and in the SP-600-JX receivers. Within the Timing and Control unit it activates the KRP11 DG relay to operate the right-hand "event" pens in the Brush recorders. When this relay is

closed the event pens move to the right; away from the center of the chart. It also activates the KHP 17 D11 relay which provides timing for the camera and for the discharge ("Reset") relays in the function shelves.

This relay (KHP 17 D11) when inactivated allows the 1.0-μf capacitor to charge up to 150 volts through the 1-megohm resistor to the +300-volt supply. When it is activated, this capacitor is discharged through the 56-kΩ resistor at the input to the lower monostable flip-flop. This operates the LM-11 relay and (if the Mode switch is in TIME position) applies 24 volts to the discharge relays for approximately 0.5 second. This brings the "power" pens toward chart center quickly which serves two purposes. First, it delineates the switch point on each chart track, and, second, it speeds up stabilization at the new input level. During the period that the KHP 17 D11 relay is held in, the 2.0-μf capacitor charges up to 150 volts, and when the relay drops out at the end of this period the capacitor discharges into both flip-flop inputs. Thus one of the LM 11 relays operates each time the timer switches on or off; the other only when it switches off. The connections for providing a pulse of 60 Hz to the Camera Control Unit, U-21, can be connected to either relay, depending on whether 15-minute or 30-minute timing is being used; 30-minute timing is normal. This circuitry is powered externally so that it will continue to operate even if the time power fails.

Note that these half-second pulse outputs each 15 and 30 minutes or each 30 and 60 minutes can be used to drive latching or stepping relays for operation of more elaborate switching sequences such as would be required for some projected experiments.

6. Input Panel, U-7 (See Fig. 15)

The Input Panel consists of three subassemblies: the antenna isolator, the filter package, and the MF-HF preamplifier. The antenna isolator consists of three cathode followers and provision for injecting a calibrating pulse for the LFA. The cathode follower which carries the ARN-3 signal has an output impedance of 375 ohms, chosen to be a

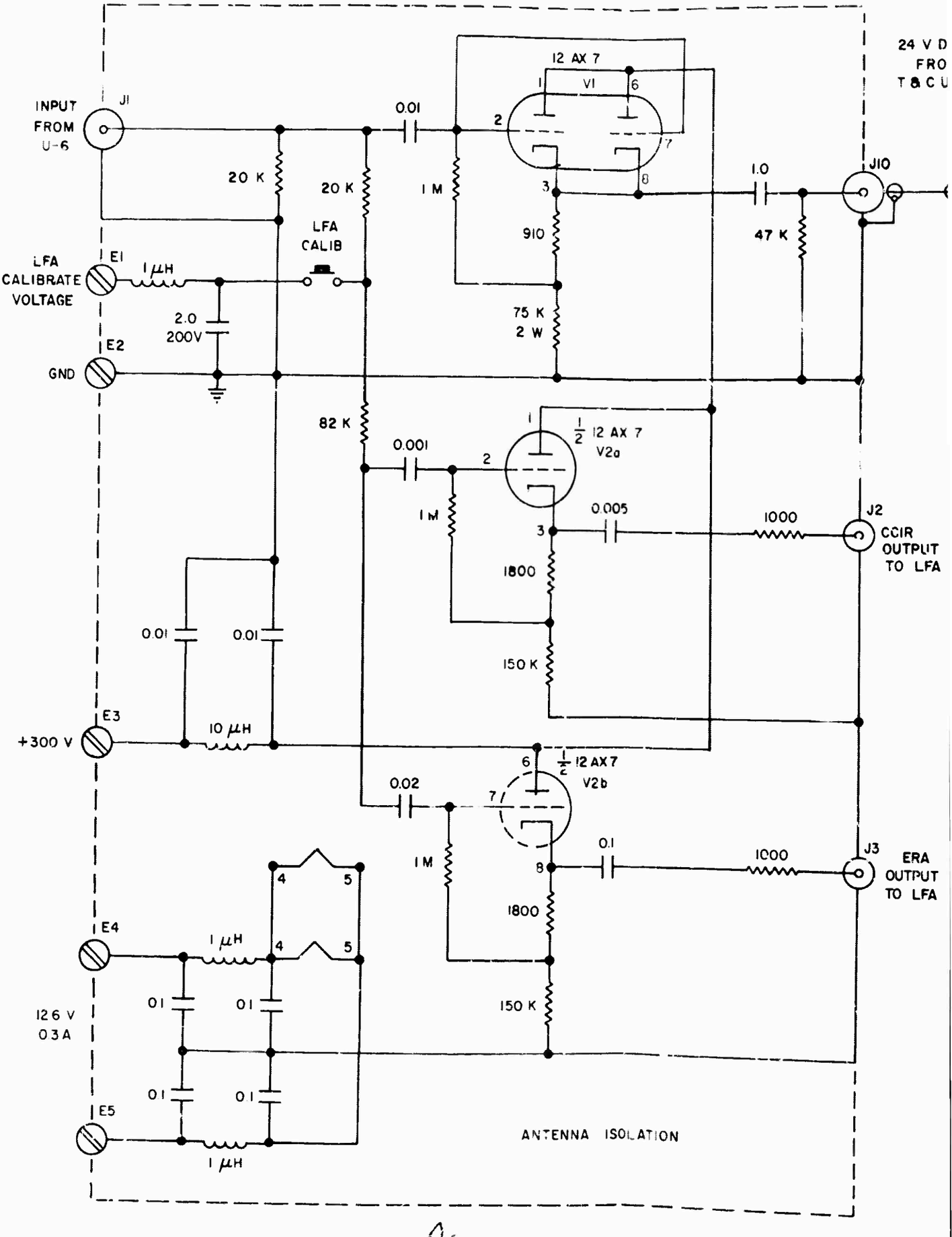
24 V D
FRO
T & C U
INPUT
FROM
U-6
J1
0.01
12 AX 7
V1
20 K
20 K
1 M
1.0
J10
LFA
CALIB
910
47 K
LFA
CALIBRATE
VOLTAGE
E1
1 μH
2.0
200V
E2
GND
75 K
2 W
82 K
0.001
1/2 12 AX 7
V2a
0.005
1000
J2
CCIR
OUTPUT
TO LFA
1 M
1800
0.01
0.01
150 K
E3
+300 V
10 μH
1/2 12 AX7
V2b
0.02
0.1
1000
J3
ERA
OUTPUT
TO LFA
1 M
1800
E4
1 μH
150 K
12.6 V
0.3 A
0.1
0.1
0.1
0.1
E5
1 μH
ANTENNA ISOLATION

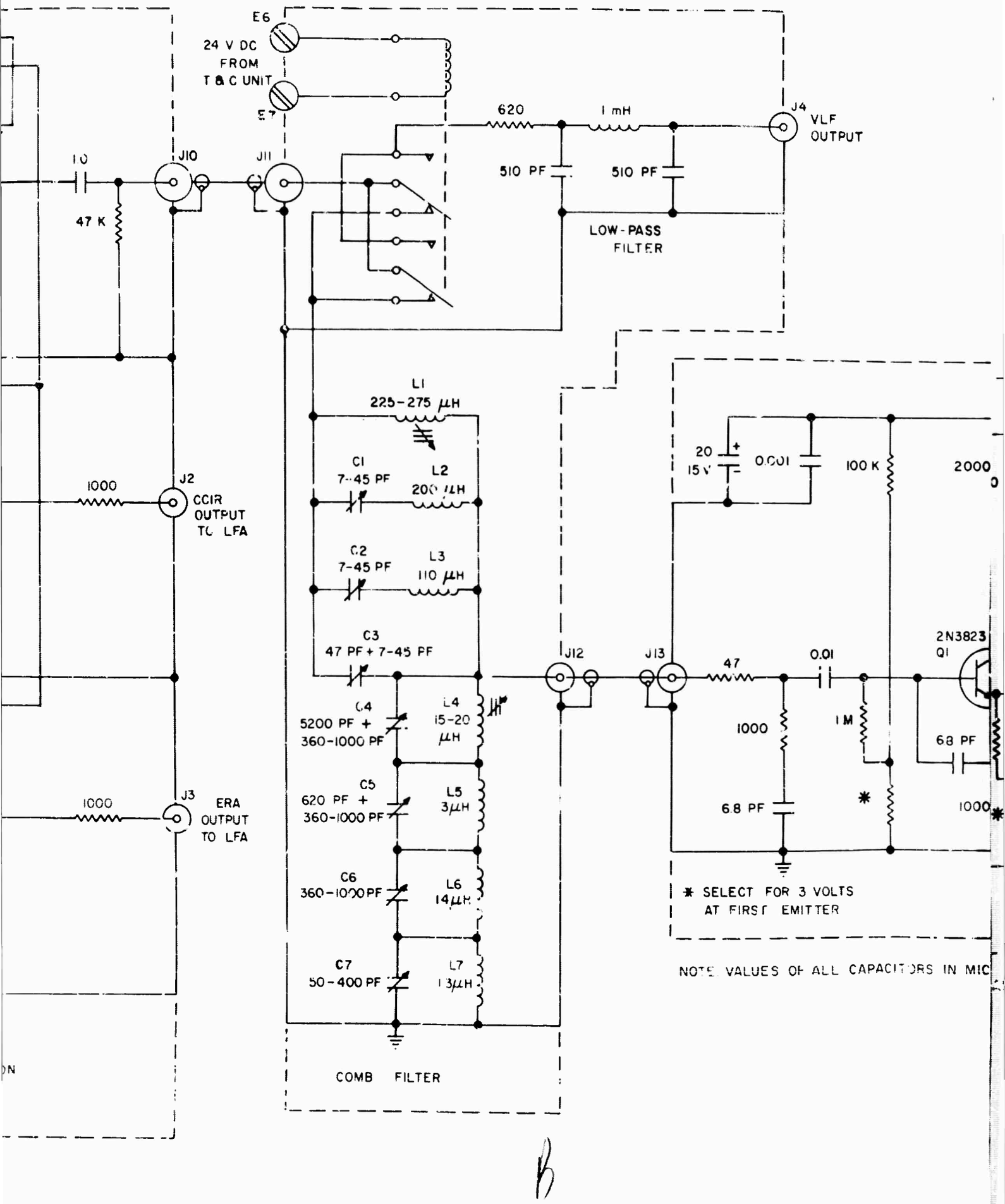
E6
24 V DC
FROM
T & C UNIT
E7
620
1 mH
J4
VLF
OUTPUT
510 PF
510 PF
LOW-PASS
FILTER
J10
J11
47 K
L1
225-275 μH
C1
7-45 PF
L2
200 μH
1000
J2
CCIR
OUTPUT
TO LFA
C2
7-45 PF
L3
110 μH
C3
47 PF + 7-45 PF
J12
J13
C4
5200 PF +
360-1000 PF
L4
15-20
μH
1000
J3
ERA
OUTPUT
TO LFA
C5
620 PF +
360-1000 PF
L5
3μH
C6
360-1000 PF
L6
14μH
C7
50-400 PF
L7
13μH
COMB FILTER
20
15 V
0.001
100 K
2000
47
0.01
2N3823
Q1
1000
1 M
6.8 PF
6.8 PF
1000
* SELECT FOR 3 VOLTS
AT FIRST EMITTER
NOTE VALUES OF ALL CAPACITORS IN MIC

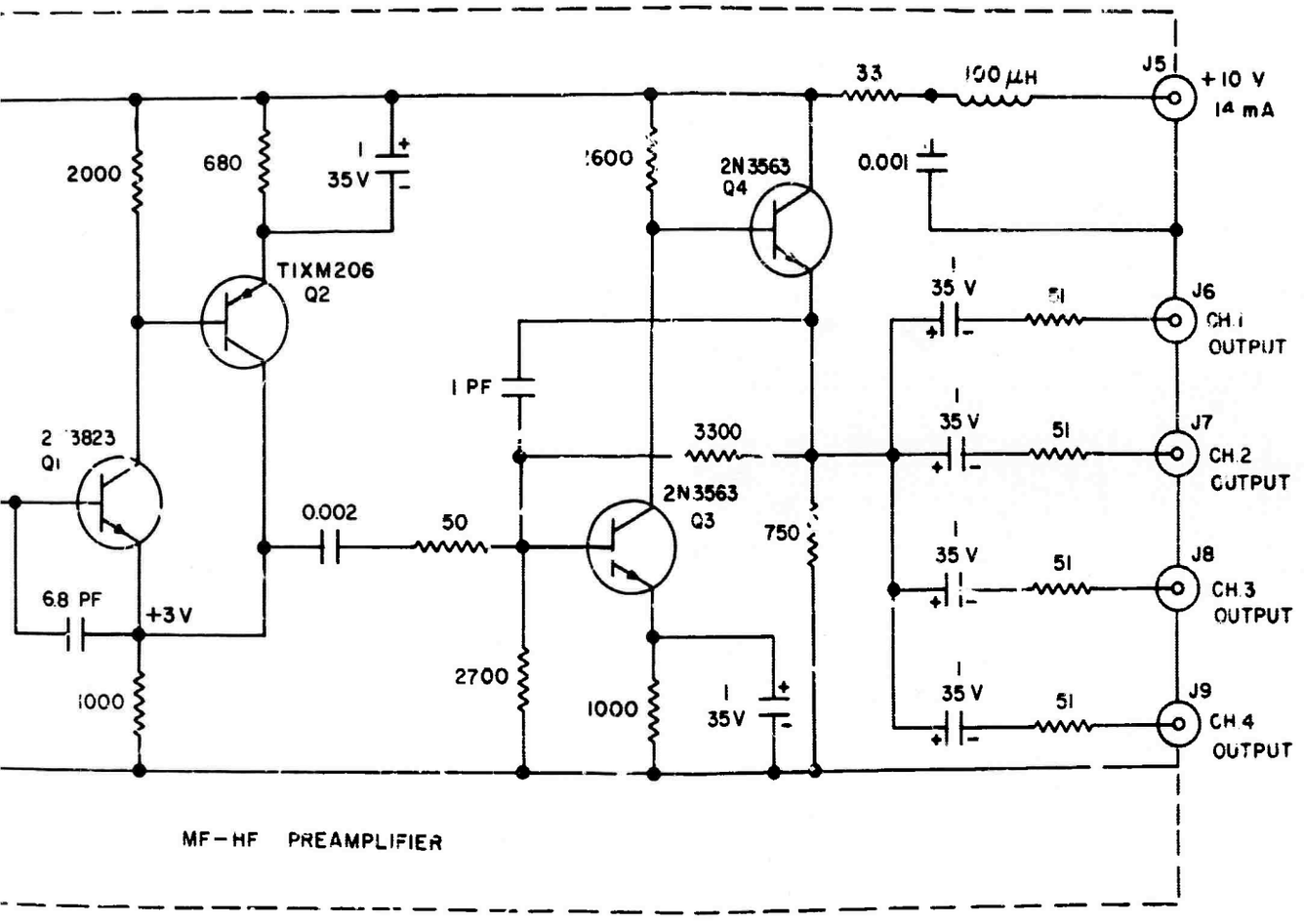

TORS IN MICROFARADS UNLESS OTHERWISE INDICATED

DB-4240-131R

FIG. 15 INPUT PANEL, U-7

good source for the comb filter, and the other two cathode followers which feed the two LFA channels have an output impedance of 750 ohms. A 1000-ohm series resistor is placed in the output of each for isolation. The filaments are supplied with regulated dc to minimize circuit noise, and all dc inputs are filtered.

The filter package consists of a relay, a low-pass filter, and a comb filter. Figure 16 shows the measured response of the low-frequency preamplifier (in the Attenuator Panel) with and without the low-pass filter. This filter is designed to work between 1000-ohm impedances, so a 620-ohm resistor is added at its input. The comb filter passes four frequencies: 0.53 MHz, 2.3 MHz, 5.0 MHz, and 10 MHz. At these frequencies the 3-dB bandpasses are 9 kHz, 38 kHz, 127 kHz, and 345 kHz, respectively. It should very rarely need alignment, except to avoid persistent interference. Refer to Appendix B if such alignment is necessary.

The output of the comb filter goes into the MF-HF preamplifier. The preamplifier response is shown in Fig. 17. It provides four outputs at a nominal 51-ohm impedance, and draws its power from the +300 volt supply through a dropping network in the Calibration Unit. Note that the gain shown on the ordinate is that between the points designated V_{in} and V_{out}. The actual gain between input and output of the amplifier is 19 dB higher than the ordinate number, since the input impedance of the amplifier is 1000 ohms. Therefore the gain of the amplifier at the operating frequencies varies from 31 to 36 dB. This gain, and the low internal noise of the preamplifier, permits operation in the optimum signal-level range of the SP-600-JX receivers with respect to dynamic range and freedom from internal noise.

7. Attenuator Panel, U-13 (See Fig. 18)

This panel includes four Daven coaxial attenuators (50 ohm) for the HF channels, providing up to 70 dB attenuation in 10-dB steps.

In the low-frequency path there is a preamplifier with an attenuator at its input, and one in each of the four outputs. These attenuators provide up to 50 dB of attenuation in 10-dB steps. The preamplifier is

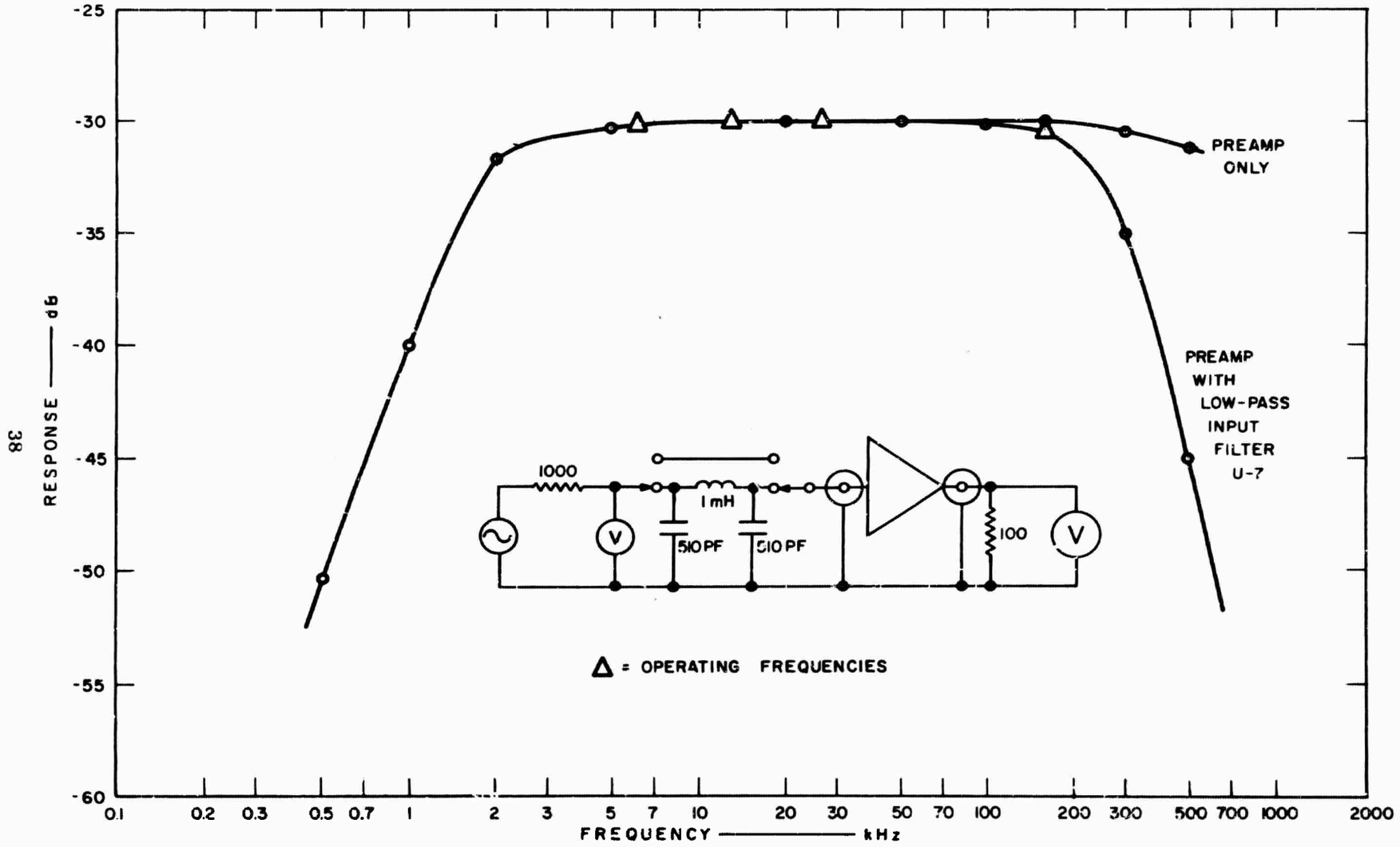

FIG. 16 LF PREAMPLIFIER AND FILTER RESPONSE, ARN-3

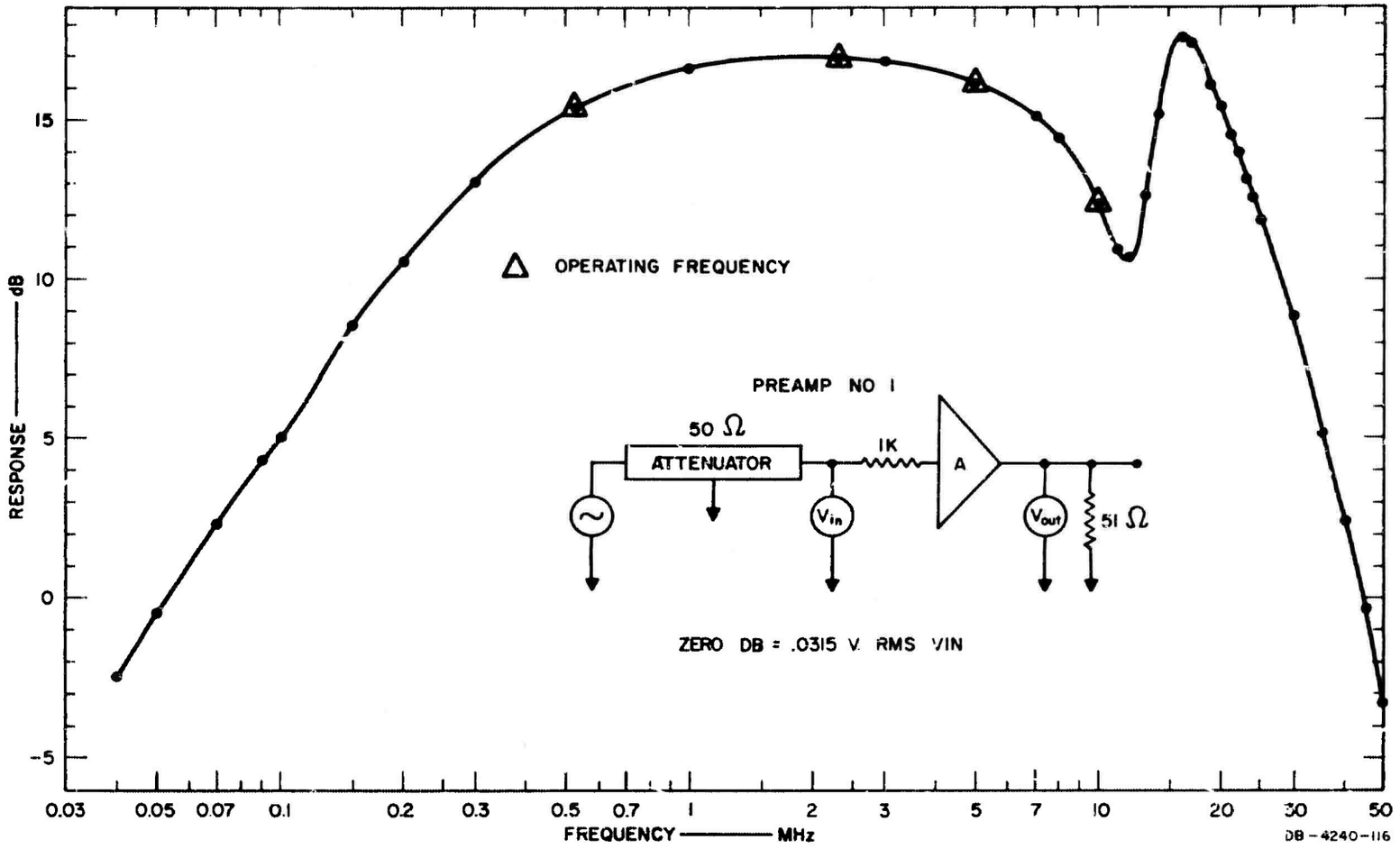

FIG. 17 MF-HF PREAMPLIFIER RESPONSE, ARN-3

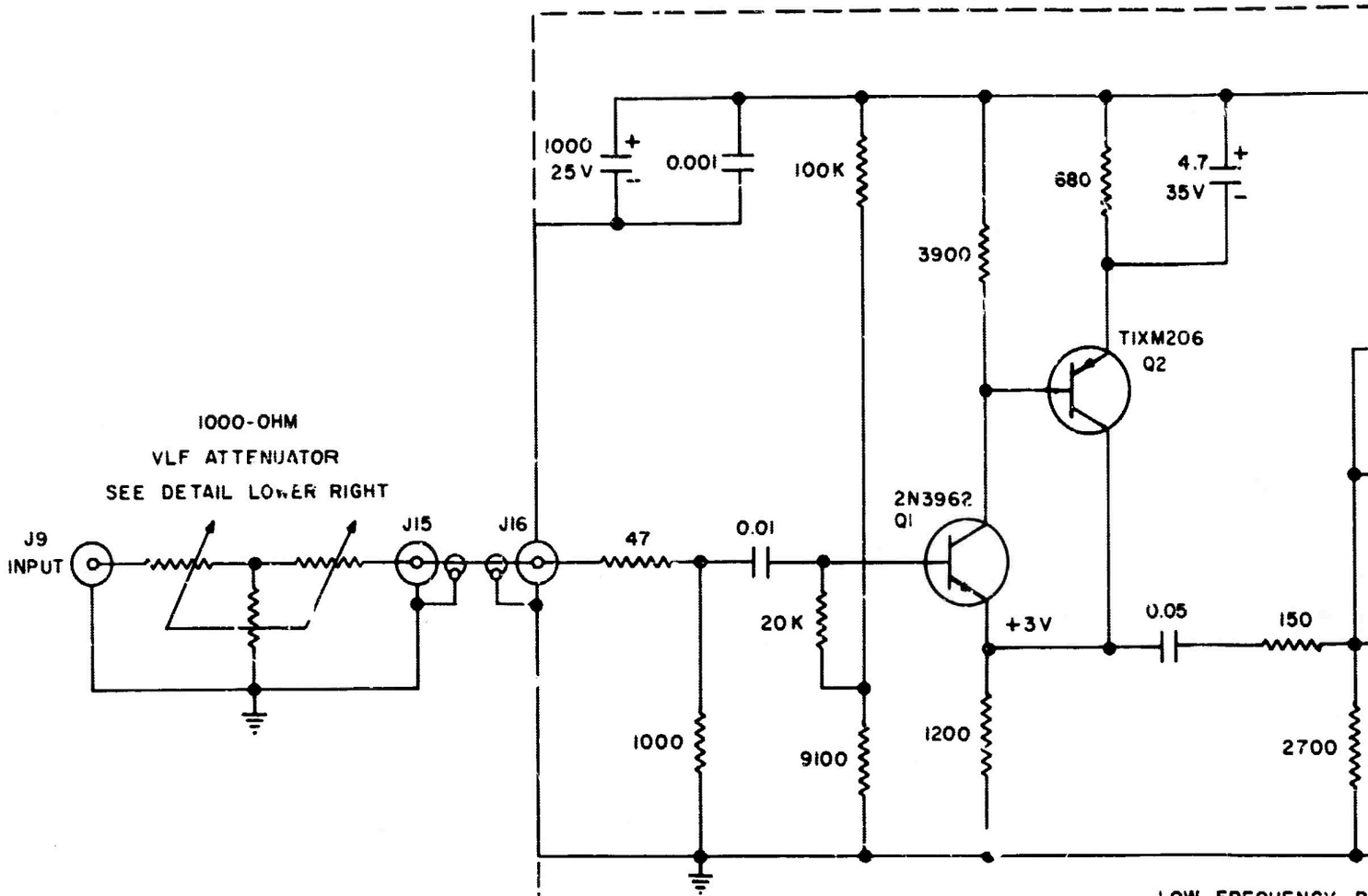

NOTE: VALUES OF ALL CAPACITORS IN MICROFARADS UNLESS OTHERWISE

A

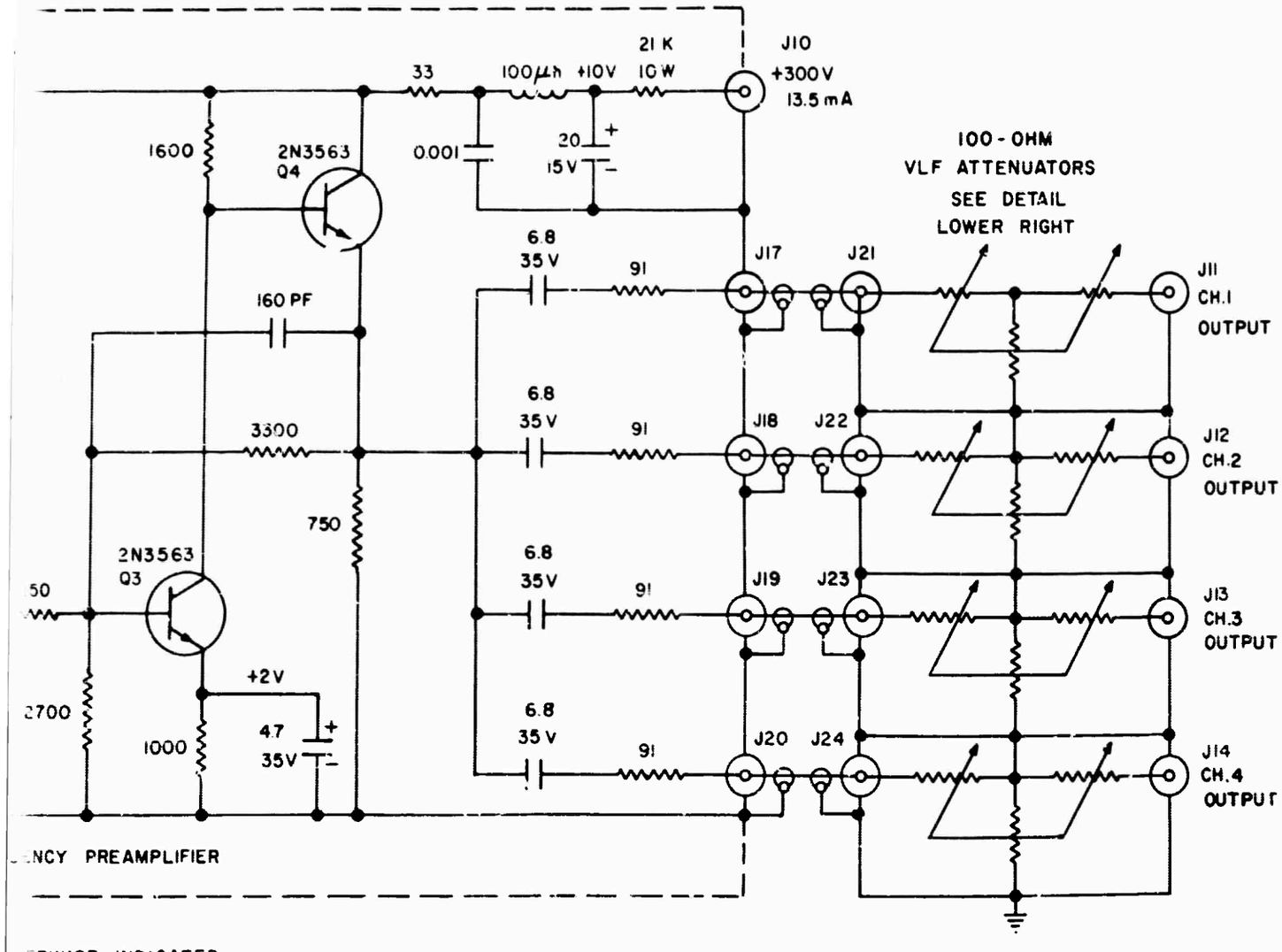
21 K
J10
33
100μh +10V
10W
+300V
13.5 mA
1600
2N3563
Q4
0.001
20
15V
100-OHM
VLF ATTENUATORS
SEE DETAIL
LOWER RIGHT
6.8
35V
91
J17
J21
J11
CH.1
OUTPUT
160 PF
3300
J18
J22
J12
CH.2
OUTPUT
750
2N3563
Q3
50
J19
J23
J13
CH.3
OUTPUT
+2V
2700
1000
4.7
35V
J20
J24
J14
CH.4
OUTPUT
NCY PREAMPLIFIER
ERWISE INDICATED

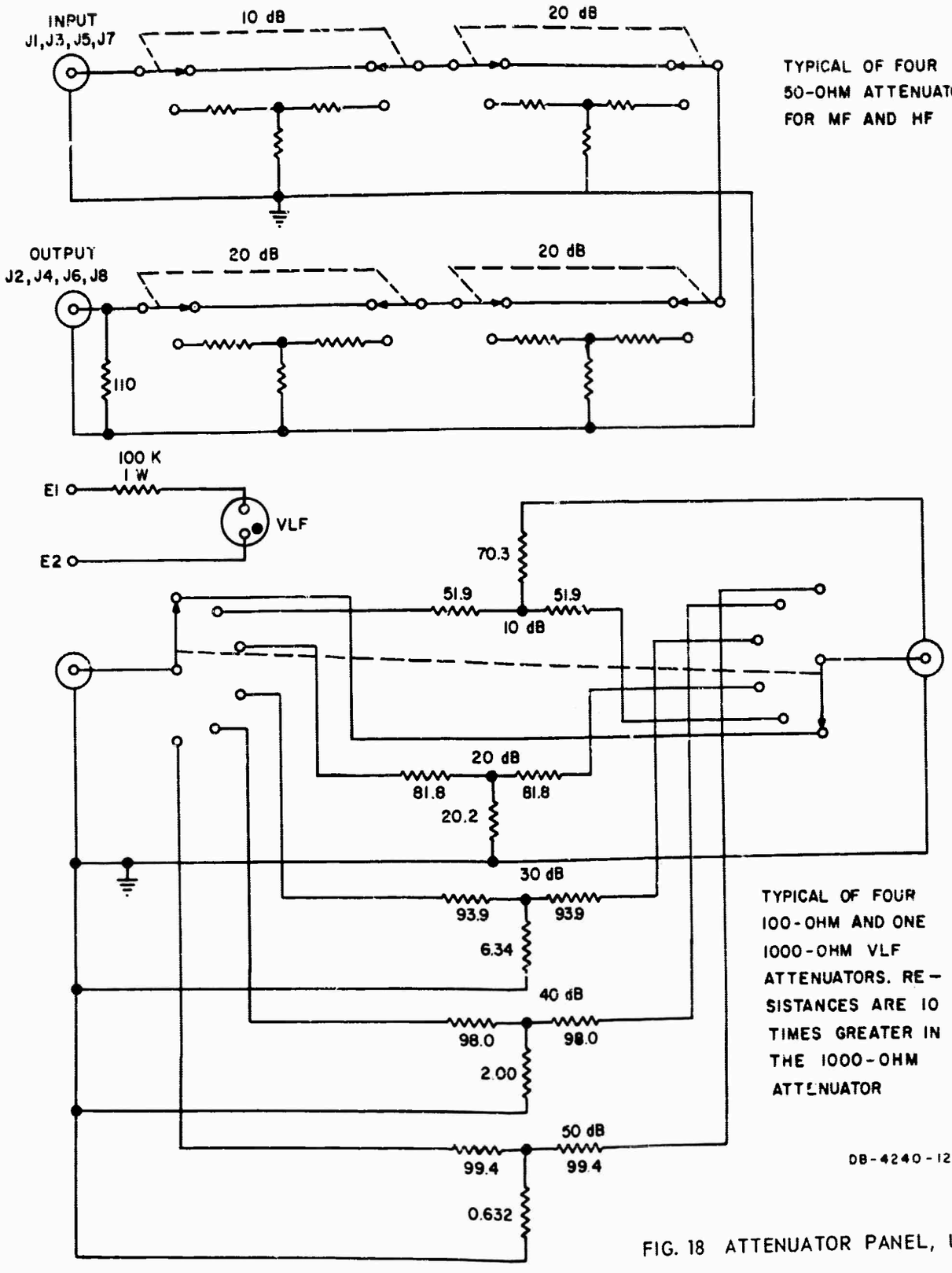

FIG. 18 ATTENUATOR PANEL, C-13

C

similar to the MF-HF preamplifier with changes appropriate to the different frequency range. Its gain varies from 33 to 34.5 dB at the operating frequencies. Note that the actual gain is 10 dB higher than the ordinate readings because of the different impedances at input and output. The frequency response is shown in Fig. 16.

8. Hammarlund SP-600-JX Receivers, U-4, U-5, U-16, U-17

Figure 19, the schematic of the modifications to the receiver, refers to Fig. 13 of the instruction manual for this receiver: Issue 6 of Hammarlund instruction manual No. K52708-1. These modifications consist of a shorting jack added in the AVC bus to allow the use of an externally developed AVC, and provision for injecting an externally generated 455-kHz signal into the IF strip. The added relay which selects either the internal or external 455 kHz for the IF also puts the gate circuit into the single-conversion mode if the receiver is tuned to a frequency above 7.4 MHz, and shorts the unused input. A 110-ohm resistor is shunted across the input (which is 95 ohms) to match the 50-ohm attenuator and cable impedance.

The gain and AVC characteristics of the receiver determine the operating range permissible. Figure 20 shows a plot of the AVC characteristics of the receiver with a superimposed shading of the chosen operating region. This was chosen by consideration of the dynamic range requirements illustrated in Fig. 21. To handle F_a and V_d simultaneously the receiver obviously must have a 60-dB range: plus and minus 30 dB from V_{ref}. Although V_{ref} will be held constant by the controlling AVC voltage, the average power at the input of the receiver will vary. Therefore this ±30 dB range, centered about the fixed V_{ref}, must exist for a range of AVC voltages. Specifically, the required 60-dB range about V_{ref} must be available from the lowest to the highest AVC voltage the equipment will develop. By choosing an AVC range from -4 to -8 volts and a V_{ref} at 6.6 mV, the required 60-dB dynamic range is achieved over a 36-dB control range. The gain of the power strip in the function shelf from which the AVC is derived is sufficient to hold V_{ref} constant within 0.1 dB.

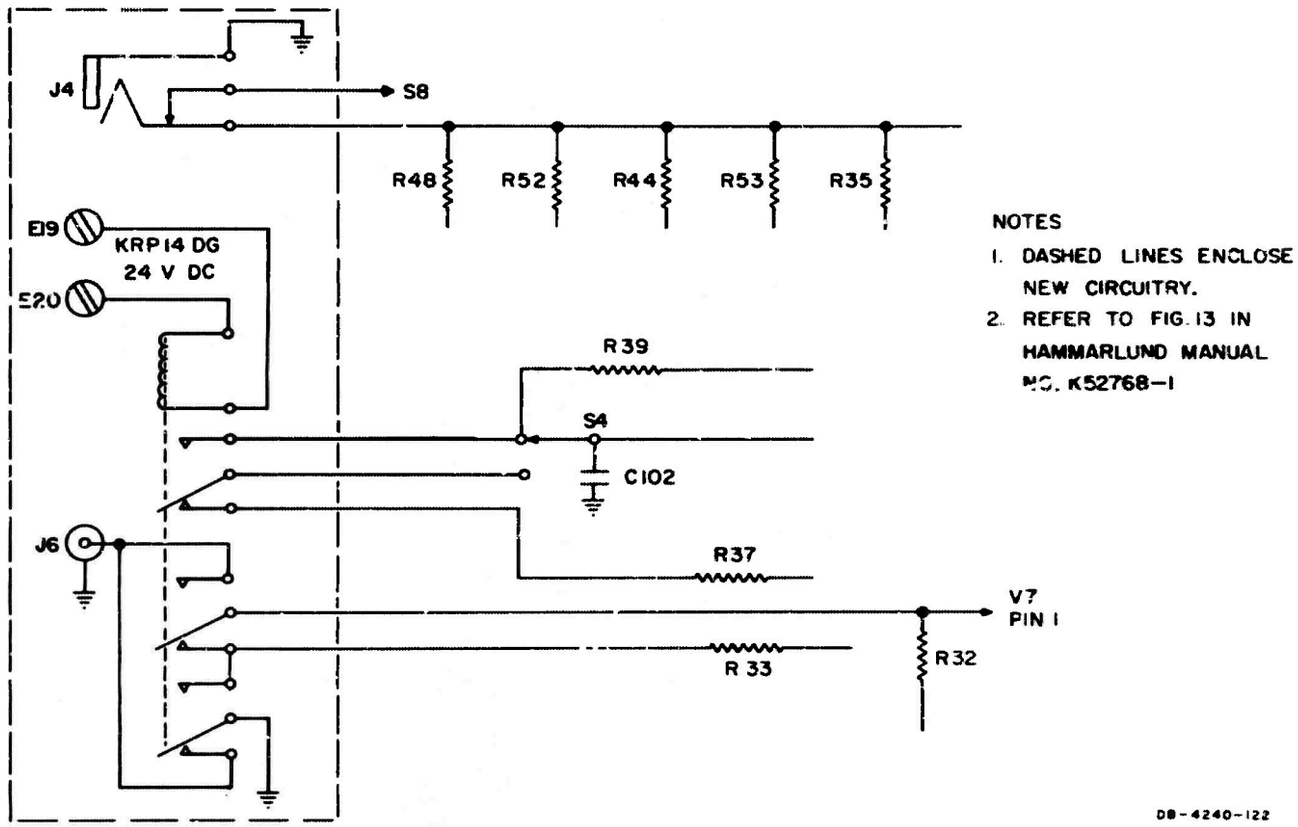

FIG. 19 SP-100-JX RECEIVER MODIFICATIONS U-4, U-5, U-16, U-17

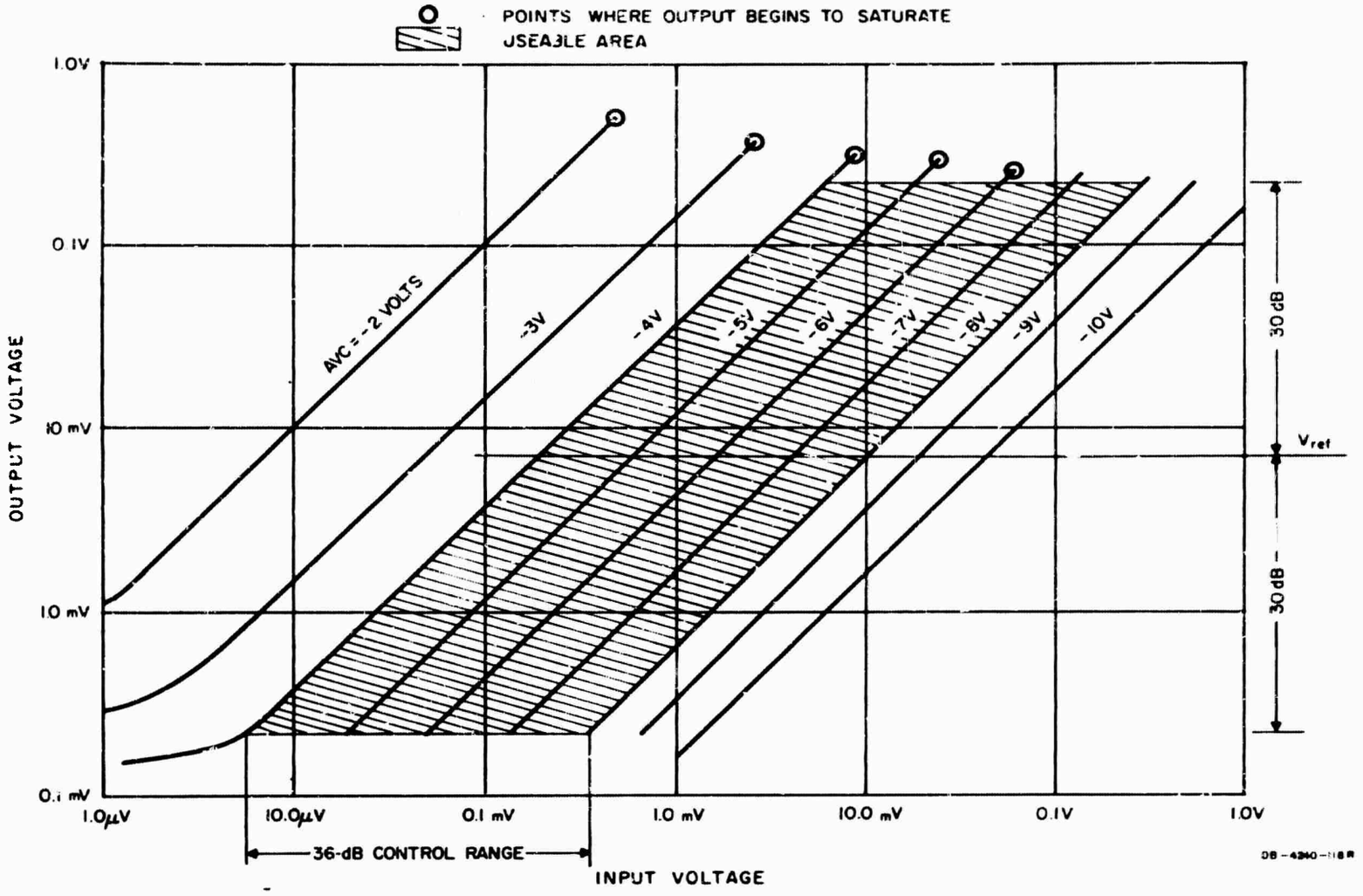

FIG. 20 AVC CONTROL CHARACTERISTICS OF SP-600-JX RECEIVER

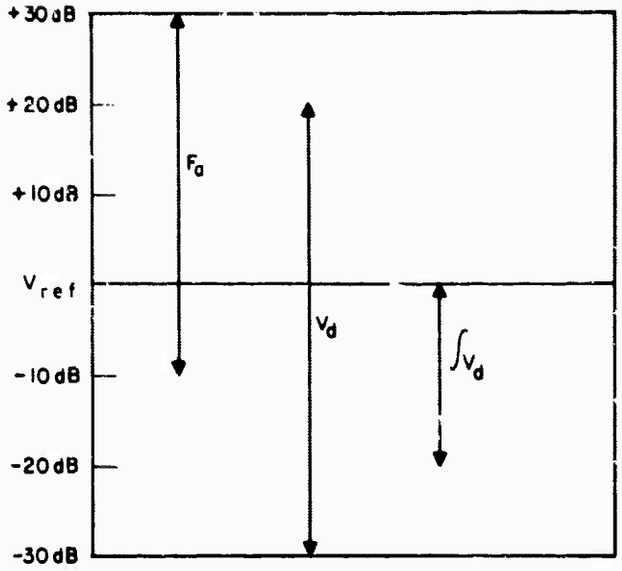

DYNAMIC RANGE REQUIREMENTS
FOR ATMOSPHERIC NOISE
MEASUREMENT DB-4240-120

FIG. 21 DYNAMIC RANGE REQUIREMENTS, ARN-3

9. Low-Frequency Converters and Power Supplies, U-1, U-20, U-30, U-31 (See Figs. 22 and 23)

The design of the converters closely follows that of the RF and converter section of the SP-600-JX, in order that the AVC characteristics will be similar. There are two tuned amplifier stages followed by a mixer. Note that in order to keep the gain similar to the RF stages in the receiver and in order to get adequate bandpass it was necessary to shunt the tuned circuits with resistors. Because type CR 46/U crystals are used, the parallel resonant crystal oscillator is extremely stable. A mechanical filter with a 2100-cycle bandpass is used in the mixer output because the oscillator frequencies are near the output (455 kHz) frequency. The cathode follower provides a low-impedance (800-ohm) source for the coaxial cable to the receiver.

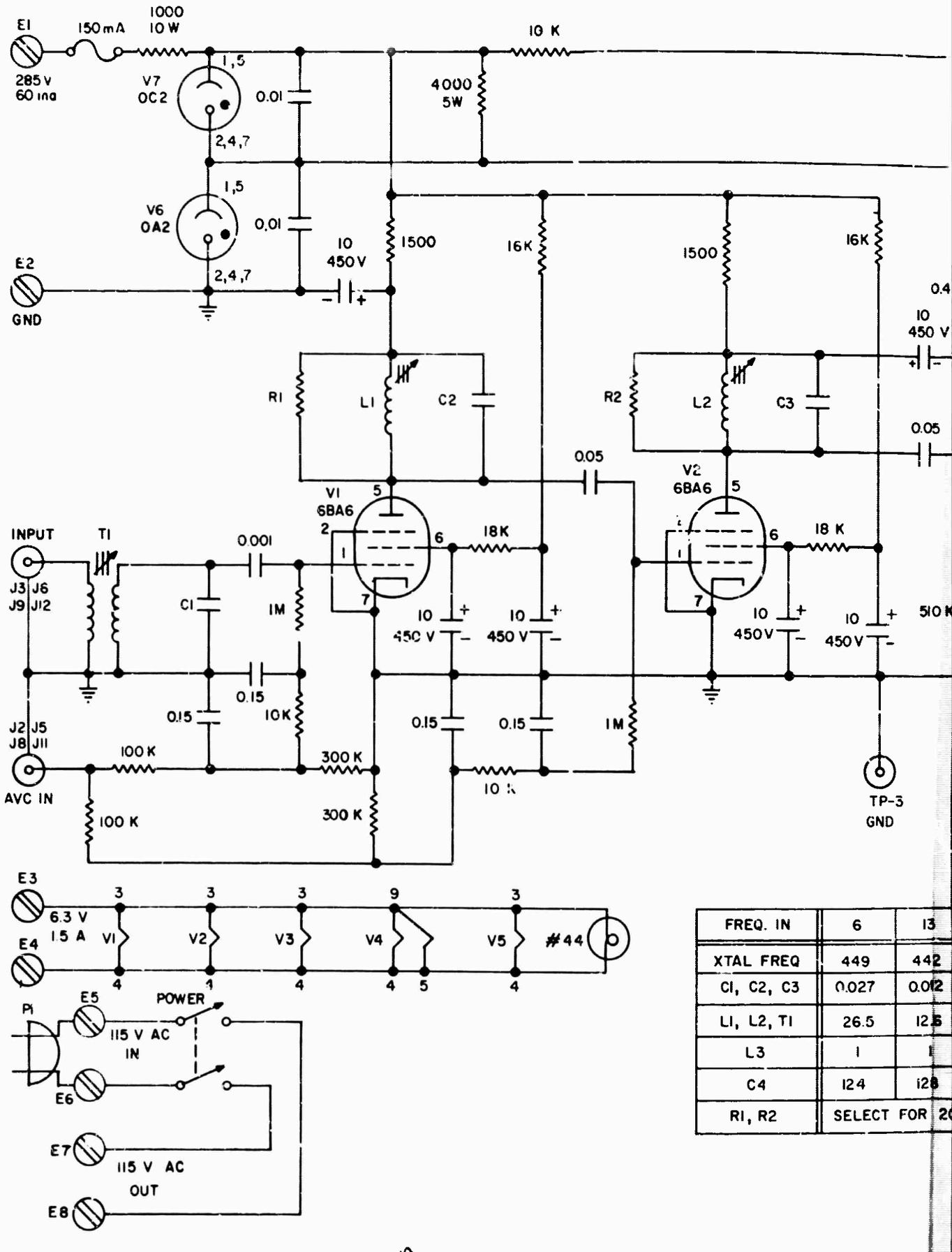

FREQ. IN	6	13
XTAL FREQ	449	442
C1, C2, C3	0.027	0.012
L1, L2, T1	26.5	12.5
L3	1	1
C4	124	128
R1, R2	SELECT FOR	2

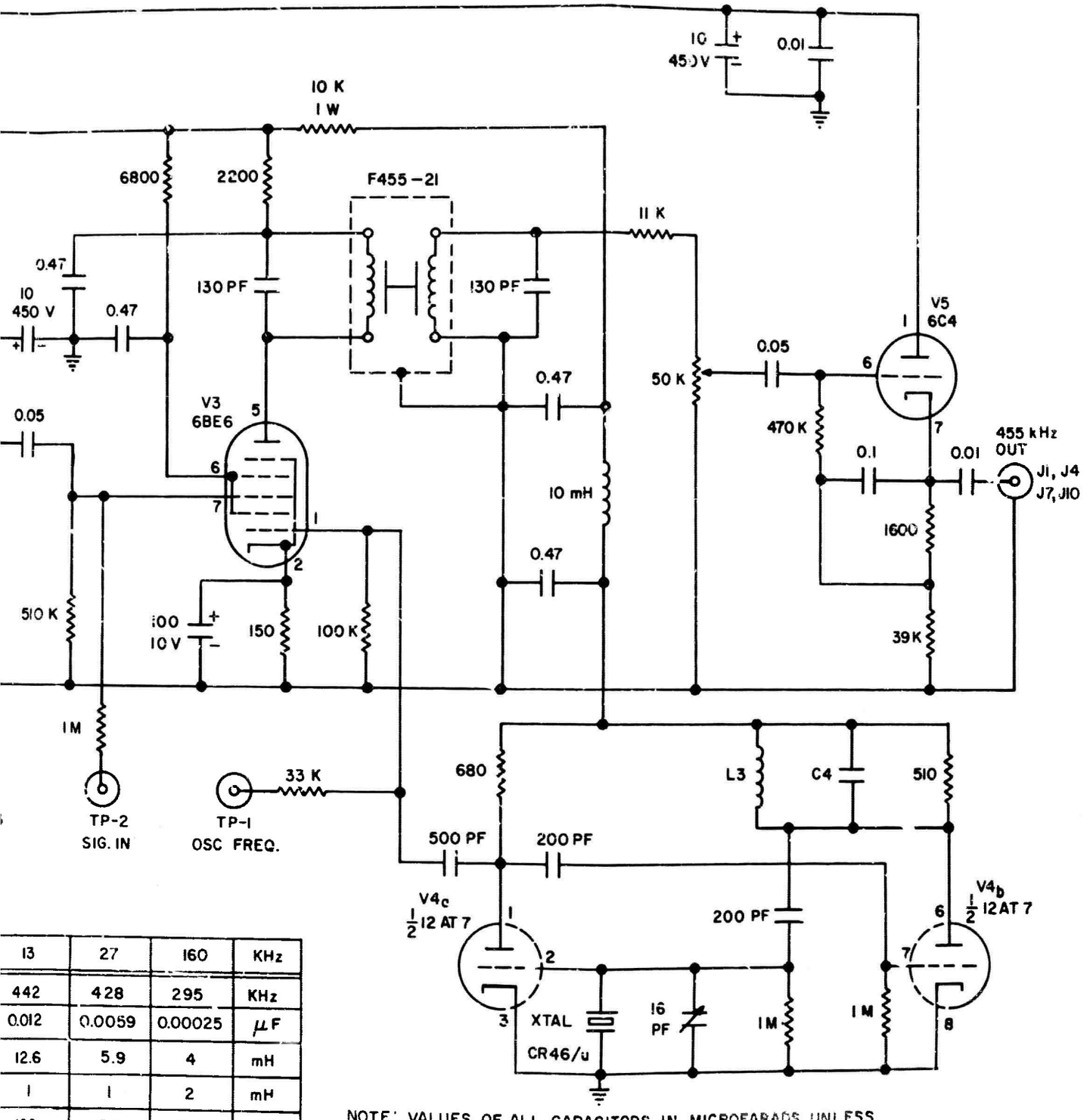

13	27	160	KHz
442	428	295	KHz
0.012	0.0059	0.00025	μF
12.6	5.9	4	mH
1	1	2	mH
128	138	146	PF
FOR 200 Hz BANDWIDTH AT -1 DB			

NOTE: VALUES OF ALL CAPACITORS IN MICROFARADS UNLESS OTHERWISE INDICATED.

DB-4240-129 R

FIG. 22 LF CONVERTERS, ARN-3, U-1

B

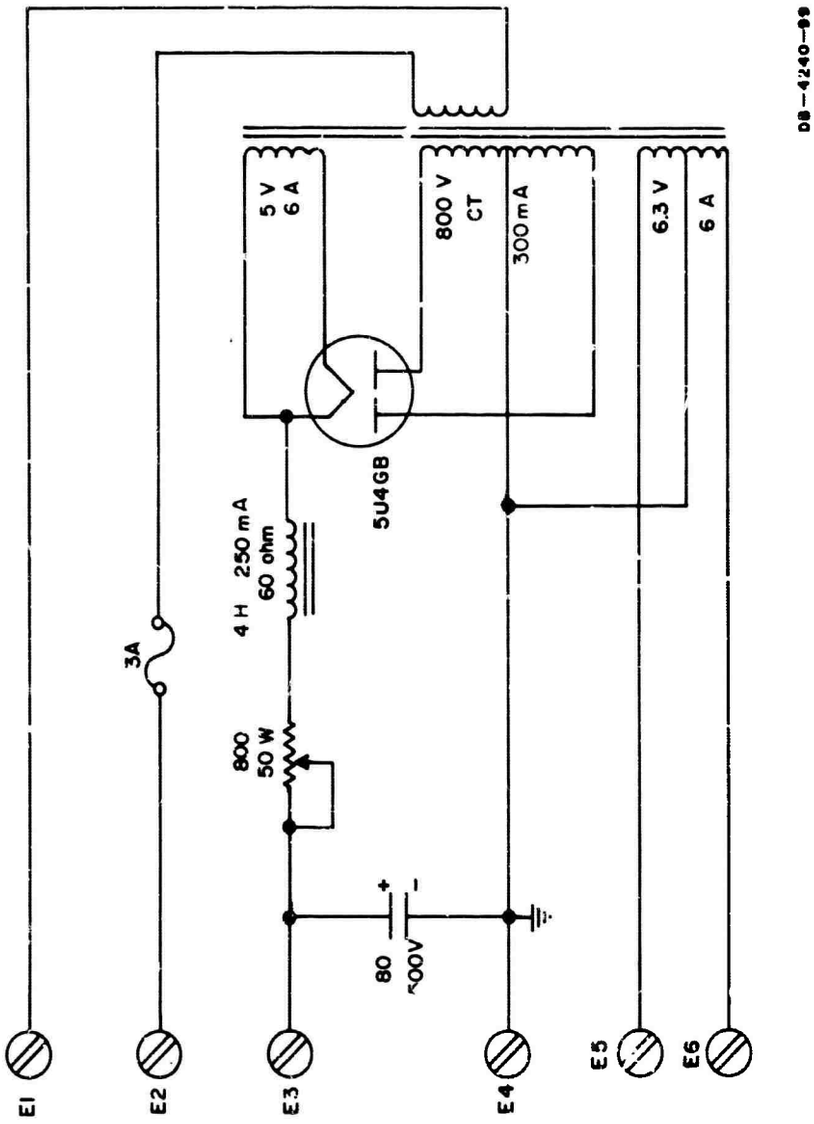

FIG. 23 POWER SUPPLY FOR LF CONVERTERS, LAEM CHABANG, U-20

10. Function Shelves U-3 and U-15 (See Fig. 24, in back cover pocket)

Each shelf holds four removable sub-units; two Power Strips and two Voltage Strips. On the front panel are mounted the two function switches for the two channels with associated time-constant capacitors and discharge ("RESET") buttons and relays.

The purpose of the Power Strip is to derive an output voltage for recording and AVC which is proportional to the power level at the input. Since power is proportional to the square of voltage, the signal is put through a squaring process before detection. The 455-kHz input is amplified in the 6AH6 tuned amplifier and then applied to the squaring circuit. This consists of two 6BJ6 remote cutoff pentodes, which have a transfer characteristic that is nearly a parabola. The output of such a tube has components that are proportional to the square of the input; the most important of these is the second harmonic. By driving the grids of the two tubes in push-pull and paralleling their plates the fundamental is largely cancelled out, but the second harmonic components add. These tubes are biased at -3.8 volts, a point of maximum curvature of the transfer characteristic, to maximize the second harmonic. The load and coupling network to the next stage constitute a tuned filter to eliminate all components except those at 910 kHz. The next stage is a 6AH6 tuned (at 910 kHz) voltage amplifier, followed by a 6BQ5 driver amplifier. The 1-to-7 step-up transformer can deliver up to 2000 volts to the detector. This is necessary because in squaring the voltage the dynamic range in decibels is doubled. Referring to Fig. 21 we see that the input range of 40 dB (-10 to +30) becomes 80 dB. The 3A2 detector has a 1.2-megohm load and its output goes through a 50-megohm resistor to the function switch.

The function switch has five positions. In the MAN (manual) position, no AVC voltage is fed to the receivers, but the recorder output from the power strip is operating, with a 0.5-second time constant. In the REF (reference) position a -1 volt signal (the drop across the 390-ohm resistor) is applied to the dc amplifier and the AVC output is locked at a negative voltage determined by the setting of the GAIN

control. The TCS (time constant short) position gives the power strip detector a time constant of 0.5 second; TCM (time constant medium) gives 5 seconds, and TCL (time constant long) gives 500 seconds. The TCS position is used during calibration and when retuning to avoid QRM. The TCM position is suitable for measuring man-made noise if desired. The TCL position is used for normal operation. The switch sections affecting the voltage strip will be described later.

The 5755 and the first 12AT7 tubes constitute a two-stage differential amplifier. The 5755 has plate currents of only about 2 microamperes in each half. The voltage at its input grid is about -220V without signal. The THRESHOLD control and its VERNIER set the dc output in the center of the recording range (with the function switch at REF).

The first cathode follower (first half of the output 12AT7) operates with its cathode at about -30 volts. The time-constant capacitors are returned to this cathode follower's 22-kΩ load resistor as a convenient dc reference (-230 volts). This drives a transistor amplifier with 7 diodes in its bias circuits for temperature and linearity compensation. The output is another cathode follower operated with its cathode only a few volts above ground.

The 455-kHz signal from the receiver also goes into the Voltage Strip. It is amplified and detected, but the dynamic range requirements are much less demanding than in the power strip, about 50 dB, so that a less elaborate detector is required. (The power detector operates between 0.1 volt and 1000 volts, the voltage detector between 0.3 volt and 100 volts). Since the integrating time constants are smaller by a factor of 5, however, large spikes of noise may possibly come through. Therefore the OA2 is placed at the grid of the first dc amplifier to limit such spikes to 150 volts. The switch positions are as follows: MAN and TCS are the same (a time constant of 0.1 second), TCM has a time constant of 1 second, and TCL (normal operation) a time constant of 100 seconds. In the REF position the dc amplifier grid is connected to a -100 volt reference point. The normal range of operation at this point is from -10 to -100 volts. The stabilized dc amplifier and

cathode follower output are conventional. The diode and resistor network in the output helps linearize the output in decibels.

11. Recorder Pen Drive Amplifiers, U-10, and Power Supply, U-19

The operating instructions for the Brush Multichannel dc Amplifier Frame and Power Supply Model RA 5680 01 with Plug-In Amplifier Units Model RD 5211 13, RD 5211 15 describes the operation of these units. The calibration of these amplifiers is part of the weekly calibration of the equipment.

12. Recorders, U-2 and U-14

These are four-channel oscillographs, Brush Model 2641-00. The operating instructions for Brush Oscillograph Models RD 2682-00, RD 2662-00, RD 2661-00, and RD 2642-00 covers this unit adequately. See Fig. 25 for the modification permitting the slow-speed drive motor and the slow-speed marker motor to be powered from the Timing and Control unit.

13. Speaker Panel, U-8 (See Fig. 26)

The speaker panel has a small loudspeaker and T-pad volume control. Four inputs are provided to connect to the audio outputs of the receivers. These go through a selector switch which also terminates the inputs not being used.

There are also mounted on it a pair of HP attenuators (models 355C and 355D) which are used as the operating attenuators during calibration. The appropriate signal is fed into J5 (SIG IN) at 0 dB level and can then be attenuated up to 132 dB before going from J6 into J7 which feeds the Calibration Unit or into the cable leading to the stub antenna.

14. HF Signal Generator, U-9

The instruction manual for the Hewlett-Packard Model 606A describes this unit.

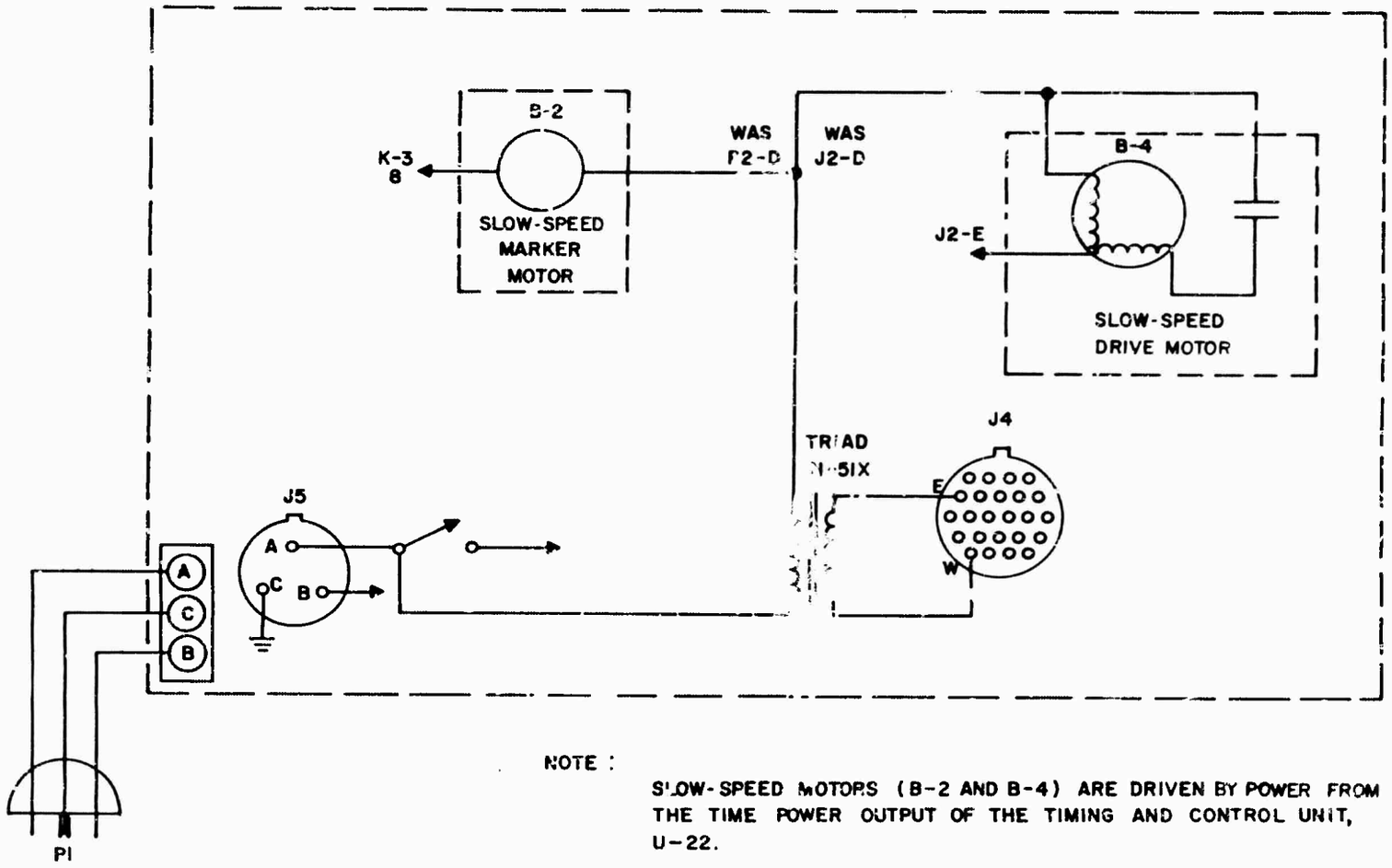

NOTE :

SLOW-SPEED MOTORS (B-2 AND B-4) ARE DRIVEN BY POWER FROM THE TIME POWER OUTPUT OF THE TIMING AND CONTROL UNIT, U-22.

DB-4240-97

FIG. 25 MODIFICATION TO BRUSH RECORDERS, U-2, U-14

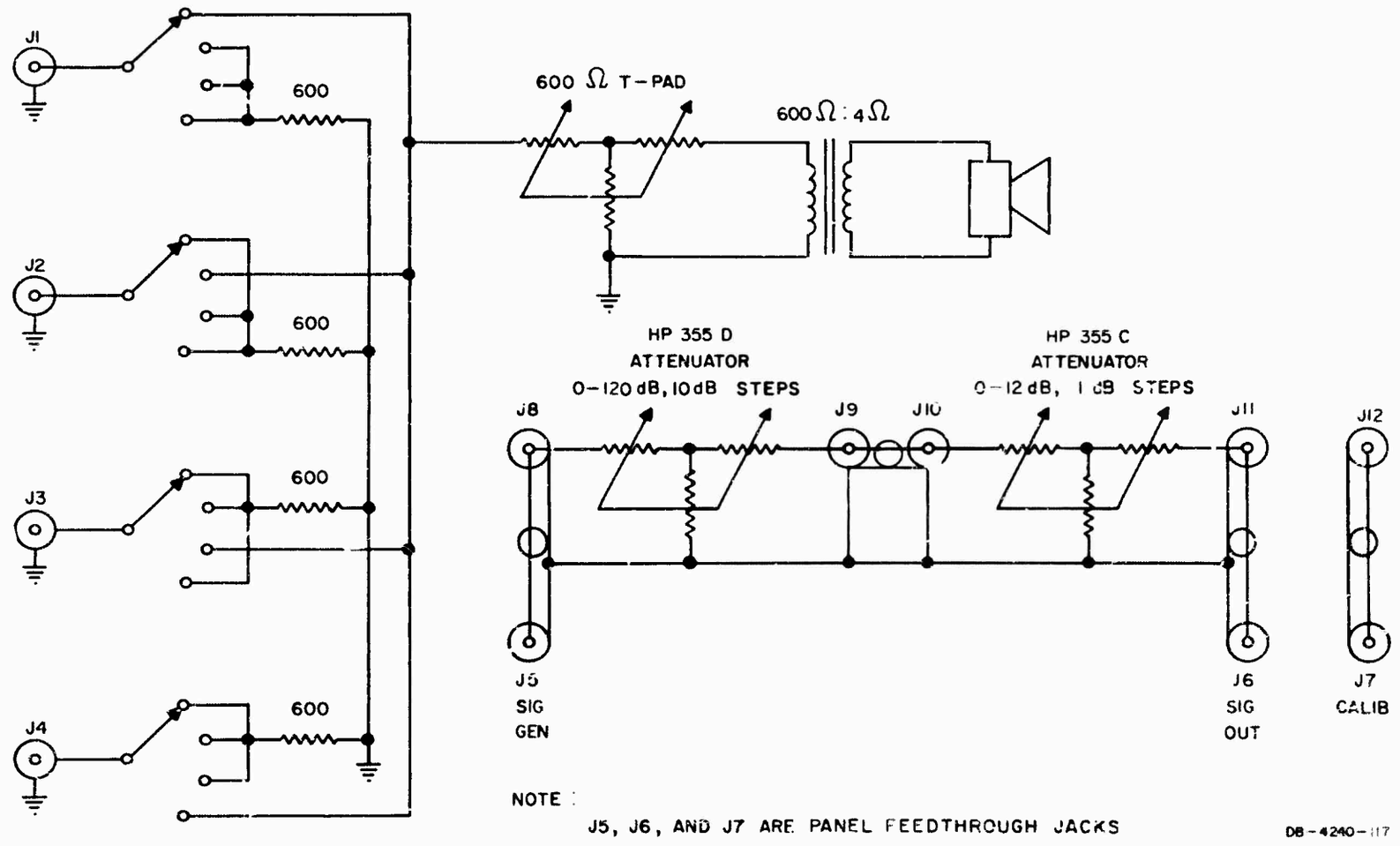

FIG. 26 SPEAKER PANEL, U-8

15. LF Calibration Instrumentation, U-29

This consists of three Hewlett-Packard instruments, the Model 204B Test Oscillator, the Model 466A Amplifier, and the Model 403A AC Voltmeter. Figure 27 shows the interconnections, and the instruction manuals for these models describe them.

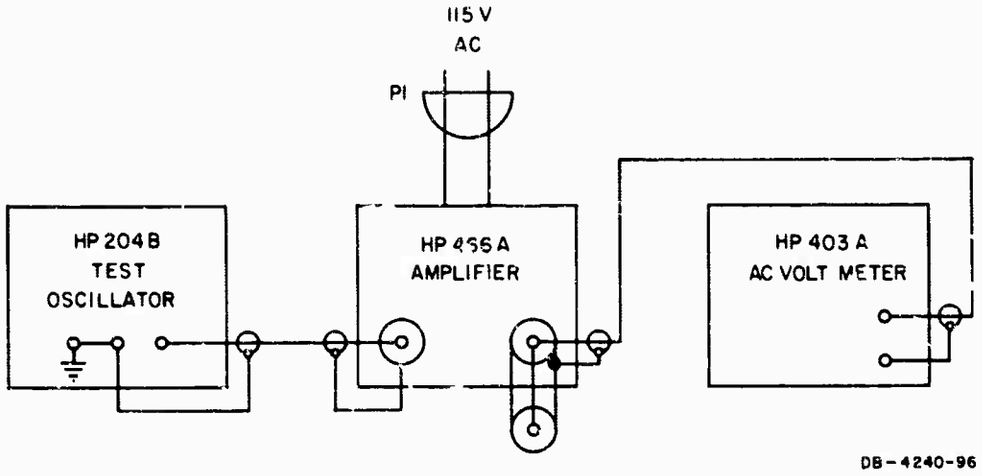

FIG. 27 LF CALIBRATION INSTRUMENTATION, U-29

16. Calibration Unit, U-6 (See Fig. 28)

This unit contains a noise diode with provision for varying its filament temperature and metering for its plate current, and dummy loads that have impedances corresponding to that of the standard antenna at various frequencies as shown in Fig. 6. These networks are factory-adjusted and should not require field adjustment. If it should be required, the covers over the variable components may be slid back and an impedance meter used to set the resistance and reactance to the correct value at each frequency. These values can be scaled from Fig. 6. See Appendix A for the theory of calibration and Sec. III-C for the calibration procedure.

17. Counter Drive Unit, LFA, U-27 (See Fig. 29)

The power supply provides 350 volts of B+. This is divided down and regulated to provide a dc calibrating voltage adjustable from 0 to

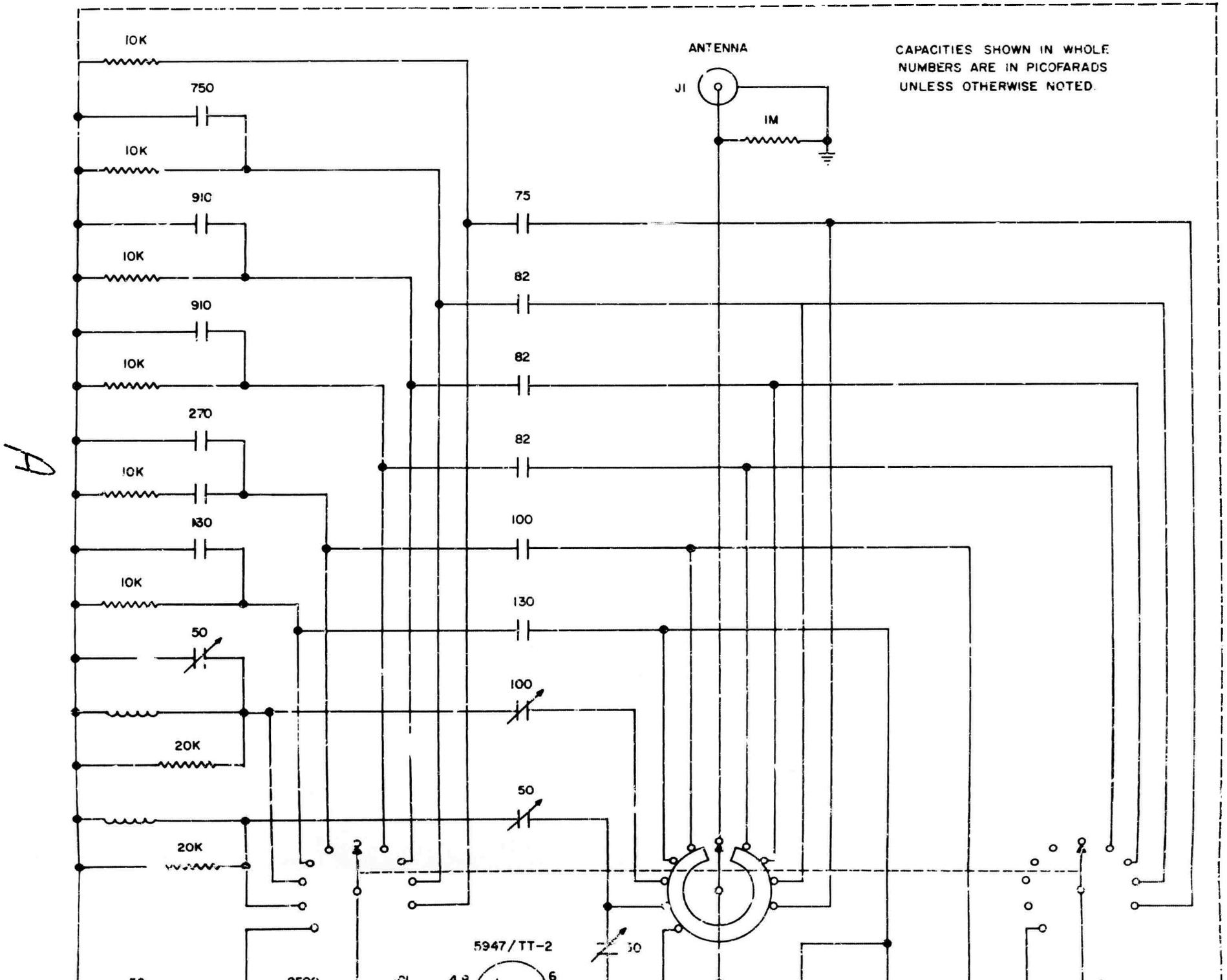
10K
750
10K
910
10K
910
10K
270
10K
130
10K
50
20K
20K
ANTENNA
J1
1M
CAPACITIES SHOWN IN WHOLE NUMBERS ARE IN PICOFARADS UNLESS OTHERWISE NOTED.
75
82
82
82
100
130
100
50
5947/TT-2
30
6

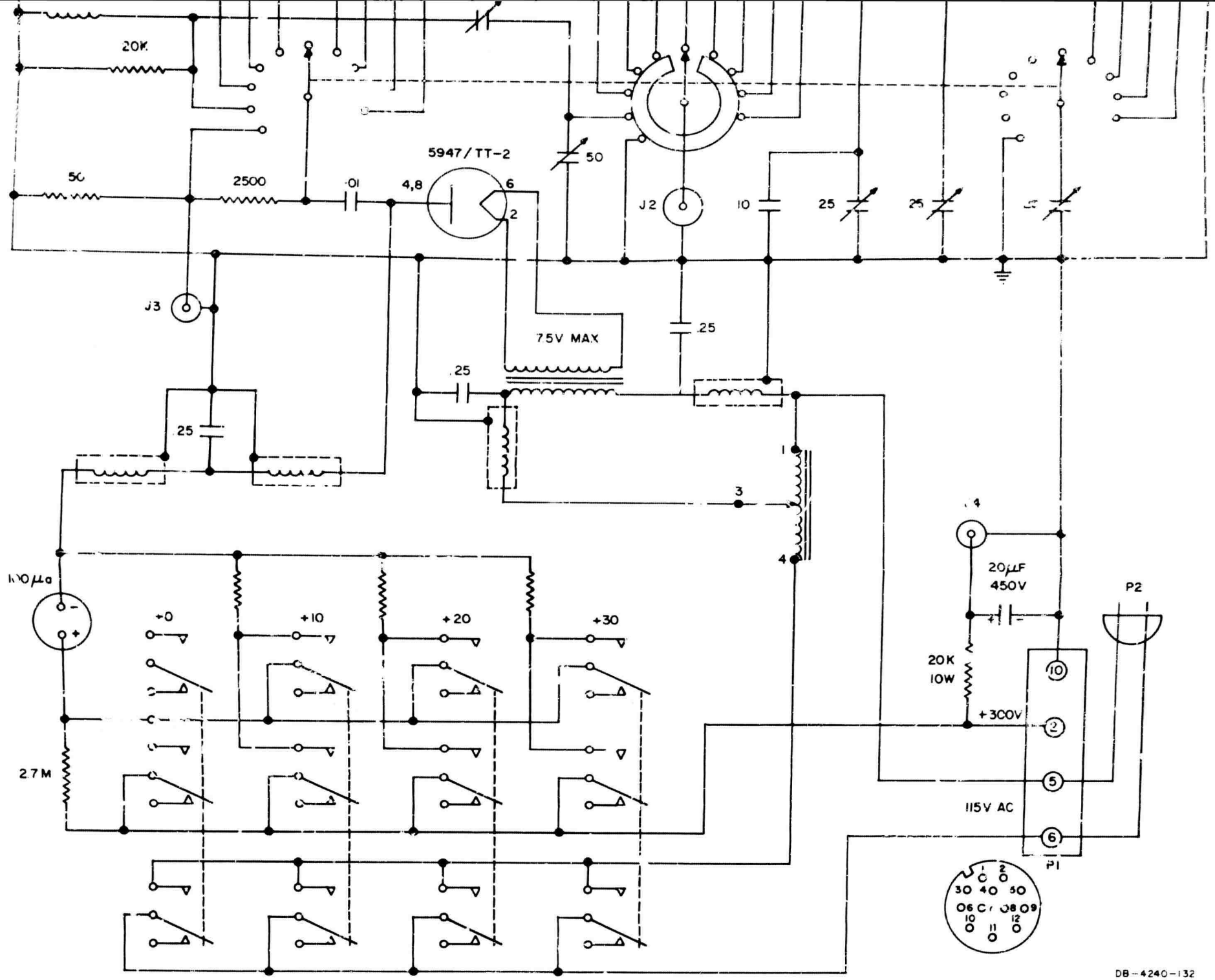

FIG. 28 CALIBRATION UNIT, U-6

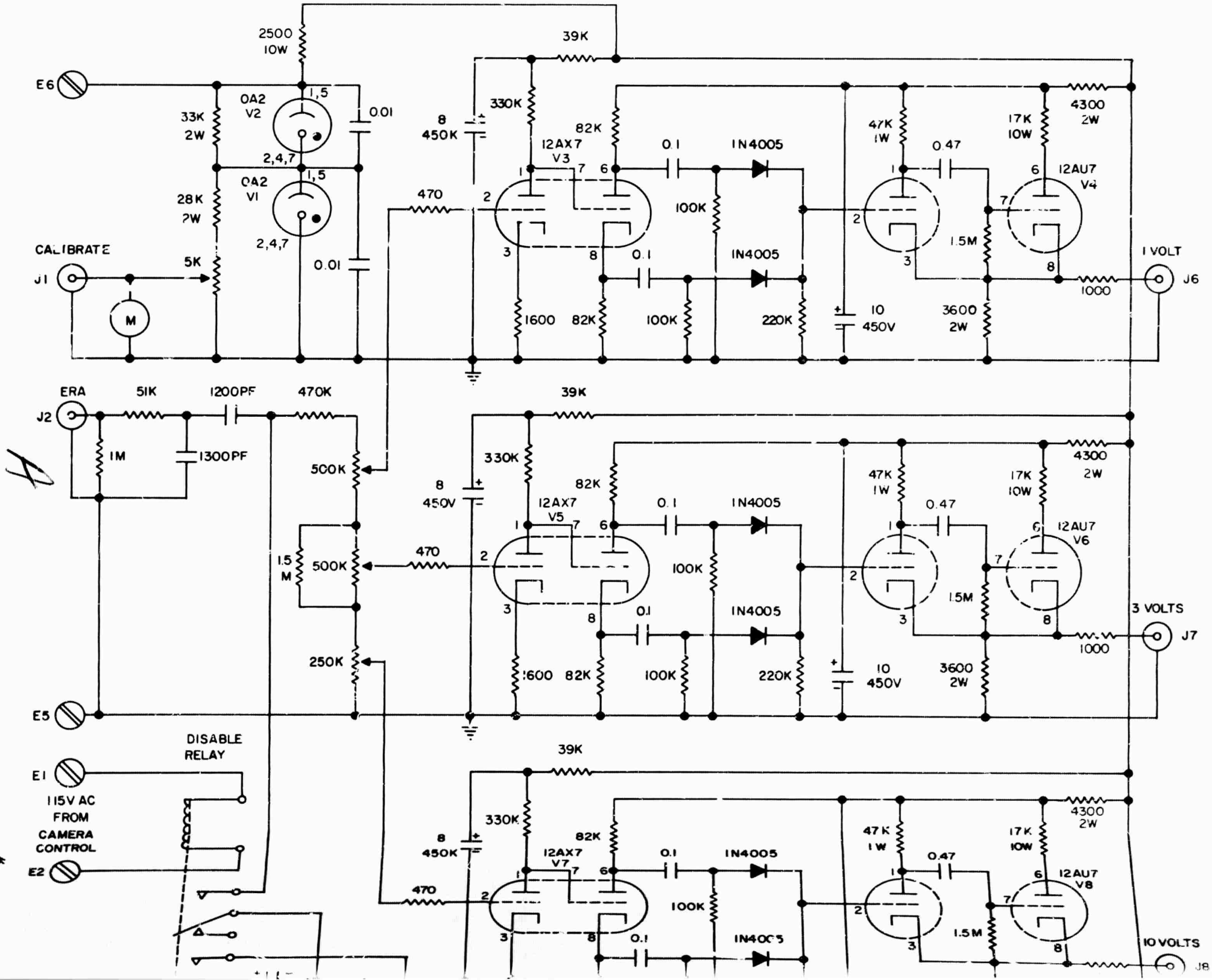
2500 10W
39K
E6
OA2 V2
1,5
2,4,7
33K 2W
0.01
8 450K
330K
82K
12AX7 V3
0.1
IN4005
47K 1W
0.47
17K 10W
4300 2W
12AU7 V4
28K 2W
OA2 V1
470
100K
1.5M
CALIBRATE
J1
5K
M
1600
82K
220K
10 450V
3600 2W
1000
1 VOLT
J6
ERA
J2
51K
1200PF
470K
1M
1300PF
500K
1.5 M
250K
12AX7 V5
12AU7 V6
3 VOLTS
J7
E5
DISABLE RELAY
E1
115V AC FROM CAMERA CONTROL
E2
12AX7 V7
12AU7 V8
10 VOLTS
J8

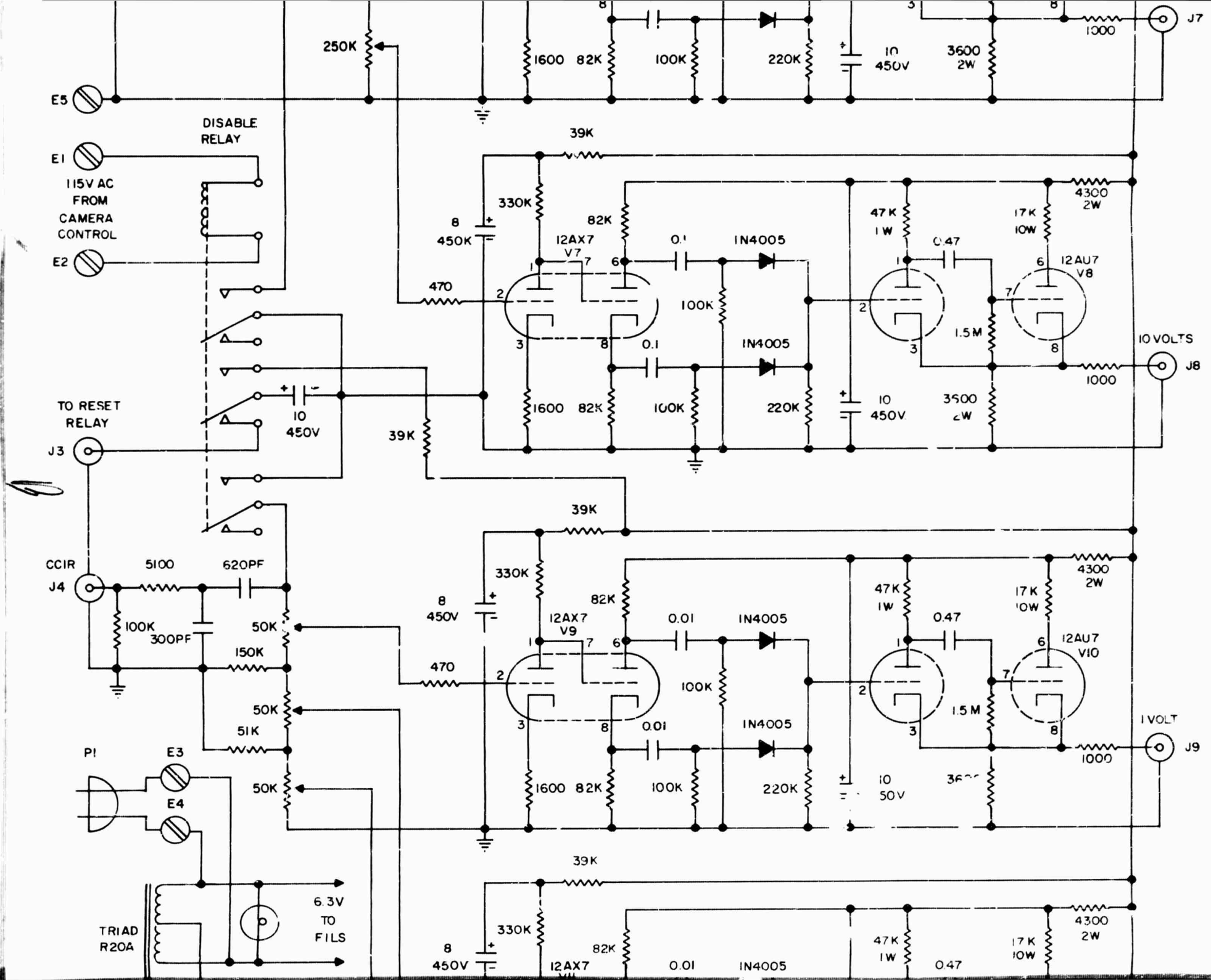
E5
E1
115V AC FROM CAMERA CONTROL
E2
DISABLE RELAY
TO RESET RELAY
J3
CCIR
J4
5100
620PF
100K
300PF
50K
150K
50K
51K
50K
P1
E3
E4
TRIAD R20A
6.3V TO FILS
250K
1600
82K
100K
220K
10 450V
3600 2W
1000
J7
39K
330K
8 450K
12AX7 V7
470
0.1
IN4005
100K
1.5M
47K 1W
0.47
17K 10W
4300 2W
12AU7 V8
10 VOLTS
J8
10 450V
3500 2W
39K
330K
8 450V
12AX7 V9
470
0.01
IN4005
100K
1.5M
47K 1W
0.47
17K 10W
4300 2W
12AU7 V10
1 VOLT
J9
10 50V
39K
330K
8 450V
12AX7
82K
0.01
IN4005
47K 1W
0.47
17K 10W
4300 2W

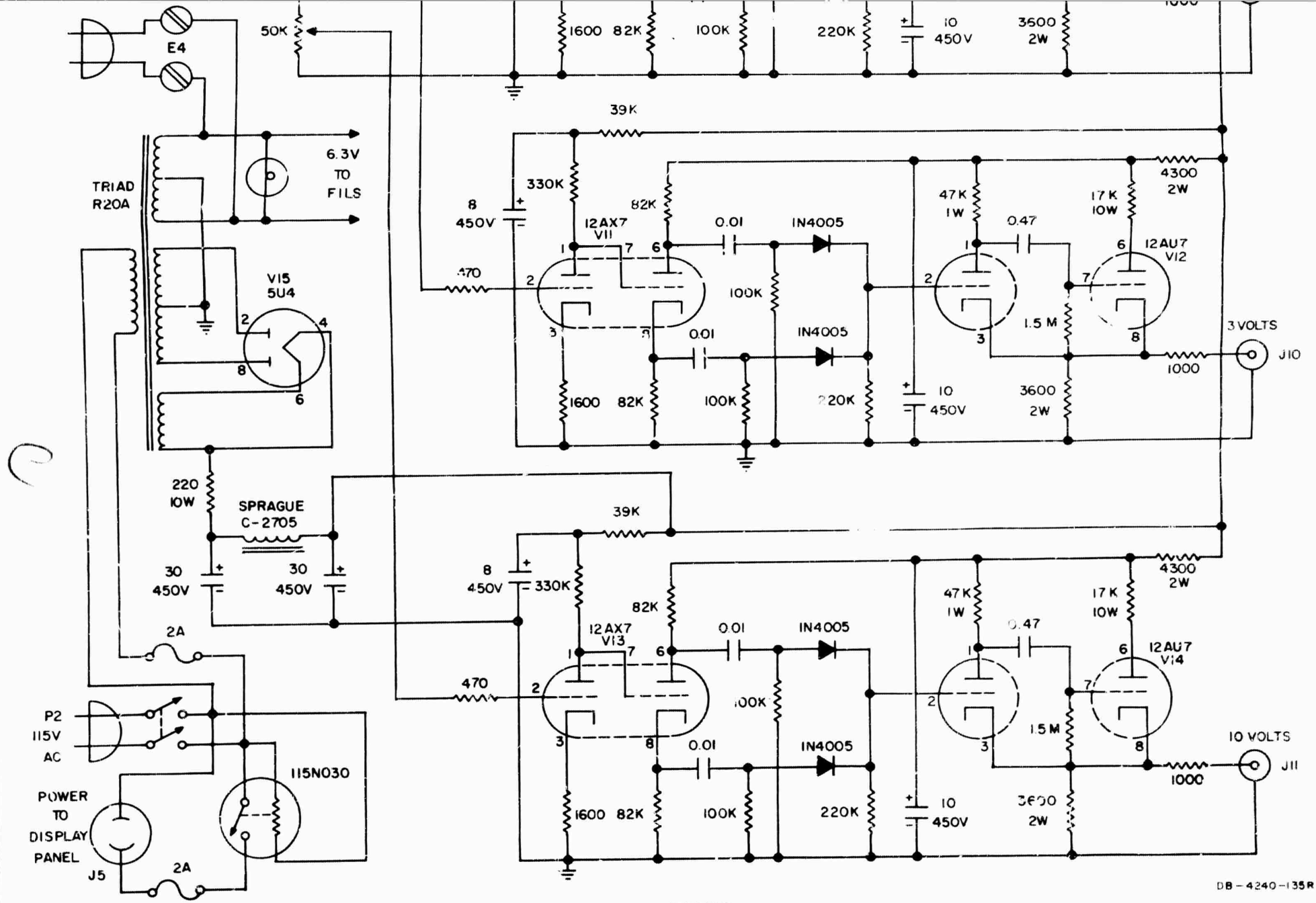

NOTE: VALUES OF ALL CAPACITORS IN MICROFARADS UNLESS OTHERWISE INDICATED.

FIG. 29 COUNTER DRIVE UNIT, LFA, U-27

BLANK PAGE

10 volts at J1. This is read on the panel meter provided and is used to charge the 2-μf capacitor in the antenna isolator. When the LFA CALIB button is pressed, the capacitor discharges across the input circuit and the resulting pulse comes into this unit through J2 and J4. Following J2 is a bandpass filter centered on 500 Hz. Its response at low level, measured from J3 of the Calibration Unit, with the function switch in the 13-kHz position, to the cathode of the phase splitter in the 1-volt channel, is down 3 dB at 100 Hz and 2500 Hz, which corresponds to the response of the ERA lightning counter. The three potentiometers feed three channels which have a counting threshold of 1, 3, and 10 volts, respectively. Each channel has an input amplifier stage followed by a phase splitter, in order that the counter will respond to either positive or negative pulses. The output of the phase splitter is rectified and combined so that any pulse exceeding about 34 volts at the input to the 12AU7 will cause the monostable flip-flop to cycle. It puts out a pulse that is over 500 milliseconds long; the total "dead" time is 600 milliseconds. This gives a maximum counting rate of about 2 per second.

The other bandpass filter (CCIR) following J4 is centered on 10 kHz, and is down 3 dB at 2 kHz and 50 kHz. All six drive channels are identical.

The disable relay is a 115V ac relay which is wired in parallel with the flood lamps for the recording camera. Each 30 minutes they turn on for 4 seconds while a picture is taken. This relay shorts the two inputs so that no counters will be turning as the picture is being taken. During this 4 seconds it also charges the 10-μf capacitor. This charge then pulses the reset relay in the display panel at the end of this period.

Filament and plate power is taken from this unit for the two 12AU7 tubes in the Timing and Control Unit. Also, there is a 115-volt ac output for the LFA Display Panel which is turned on by the time-delay relay 30 seconds after power is applied to the Counter Drive Unit. This is to allow the tubes to warm up and the cathode voltages of the

12AU7's to approach their normal 34-volt level before power is applied to the transistors in the display panel.

18. Display Panel, LFA, U-26 (See Fig. 30)

This panel contains six Veeder-Root counters, each with a two-stage transistor driver. It also has a digital clock powered from the Timing and Control unit. The power supply provides about +30 volts. Since the normal voltage at the base of each 2N3053 is +34 volts (through a 10-kΩ resistor), this transistor is normally conducting, and its emitter, and the base of the 2N301A, is near 30 volts. Since the emitter of the 2N301A is at 27 volts due to the drop through the five 1N4005 diodes, this transistor is cut off. When the drive circuit cycles, a negative square wave down to about 6 volts is applied to the base of the 2N3053. This turns the 2N301A on and causes a count. Diodes are provided to discharge the energy stored in the counter inductances during count and reset.

19. Recording Camera Control Unit, U-21 (See Fig. 31)

Each 30 minutes the timing and control unit provides a one-half-second pulse of 115-volt, 60-Hz power which is applied to E1. This activates RL-1 which is then held in by the path through RL-3 which is normally closed. Power is also applied to the flood-lamp terminals, E4 and E5, and to the 2-second time-delay relay RL-2. After 2 seconds RL-2 operates and applies power to the solenoid rectifier and to the heater of RL-3, a 2-second normally closed delay relay. The 1000-μf capacitor allows the full peak voltage to be applied to the camera-operate solenoid to give it a positive action and also helps reduce chattering in the solenoid. After another 2 seconds RL-3 opens, causing RL-1 to open, and the circuit returns to the waiting mode. Note that due to the time constant of the 1000-μf capacitor, test pulses should never be applied less than 30 seconds apart.

20. Recording Camera, U-25 (See Fig. 32)

This is a Paillard-Bolex H-16 movie camera. It is set to operate in the frame by frame mode, so a 100-foot reel of film (containing about 4000 frames), lasts about 80 days. The film is normally collected once

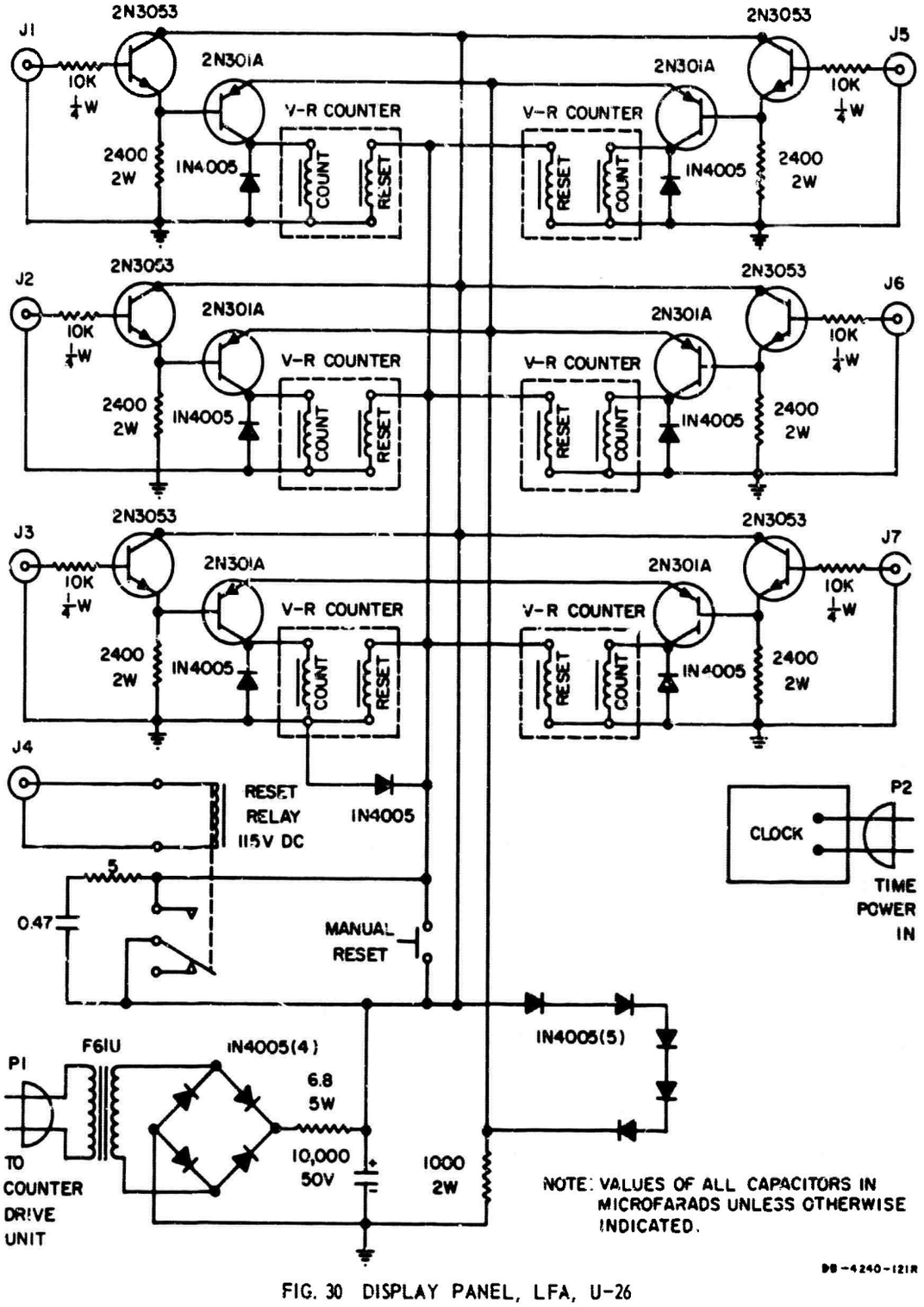

FIG. 30 DISPLAY PANEL, LFA, U-26

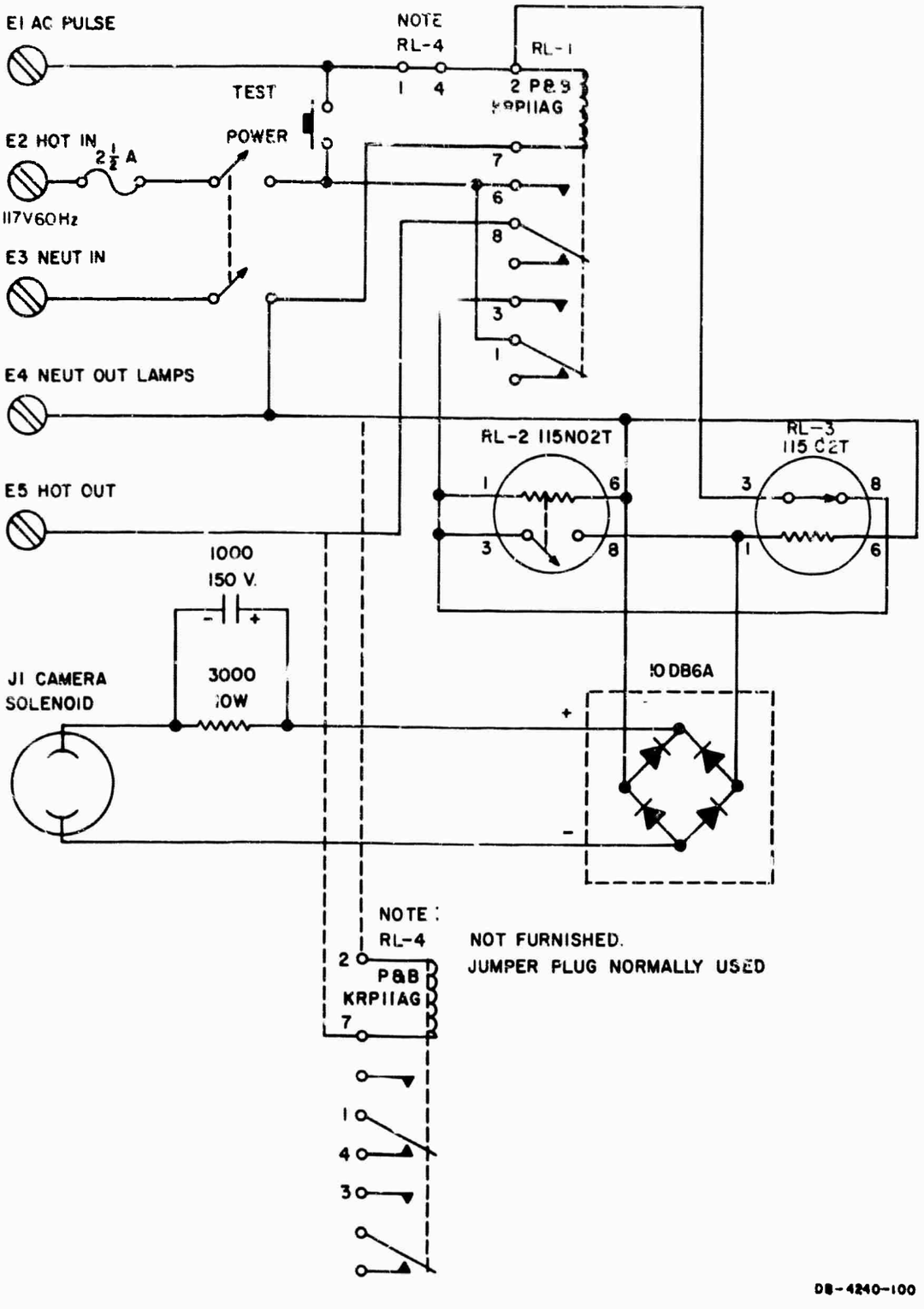

FIG. 31 RECORDING CAMERA CONTROL UNIT, U-21

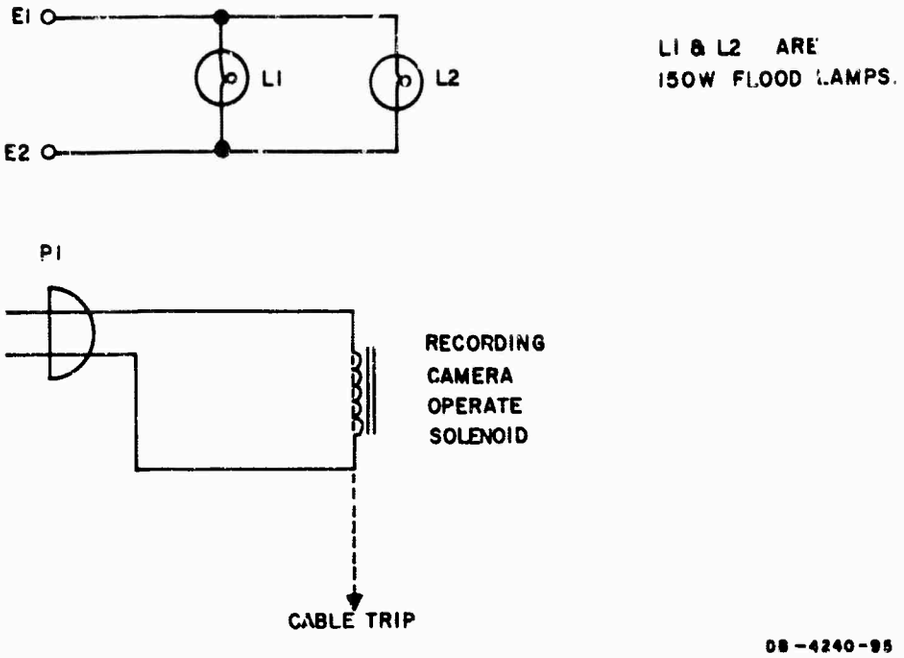

FIG. 32 RECORDING CAMERA, U-25

a month for processing. The cable trip is operated by a solenoid as described above, and there are two 150-watt flood lamps mounted, one on each side of it. Its loading, servicing, and adjustment are described in the operating manual. The film normally used is Kodak Plus-X, 16-mm safety film. For this film the aperture is set to F8, and the distance to 28 inches.

BLANK PAGE

III INSTALLATION, OPERATION, AND CALIBRATION

A. Installation

1. Siting

The equipment must be sited away from all sources of man-made electrical interference. It must be at least 1 km from all power lines and at least 3 km from lines carrying power above 5 kV. It must be at least 0.5 km from any road carrying appreciable motor traffic; a 1-km minimum is much better. It should have a clear horizon free of all structures and hills down to 4 or 5 degrees above the horizon.

2. Antenna

The standard antenna is a 21.75-foot telescoping monopole mounted on a ground platform on the roof of the equipment van (see Fig. 33). The base insulator is a 6-inch plastic sphere, and the antenna base is connected to a length of special low-capacity coaxial cable which enters the van through a water-tight packing. The ground plane is about 8 feet high and consists of 90 lengths of No. 12 copperweld wire radiating from the platform to make a plane 200 feet in diameter. The outer ends are supported on guyed posts (see Fig. 2). The ground platform is connected to the equipment and to a one-square-yard copper plate buried six feet deep by copper strip one-sixteenth-inch thick by four inches wide. The gap of the lightning protector must be set to 3 mm.

3. Other Requirements

This equipment requires a 115-volt, 60-Hz power source which will continuously supply 25 amperes at between 100 and 132 volts ($115 \pm 15\%$). This is in addition to power requirements for heating, lighting, or air conditioning. Provision must be made to keep the ambient temperature between 65 and 75°F (18 and 24°C).

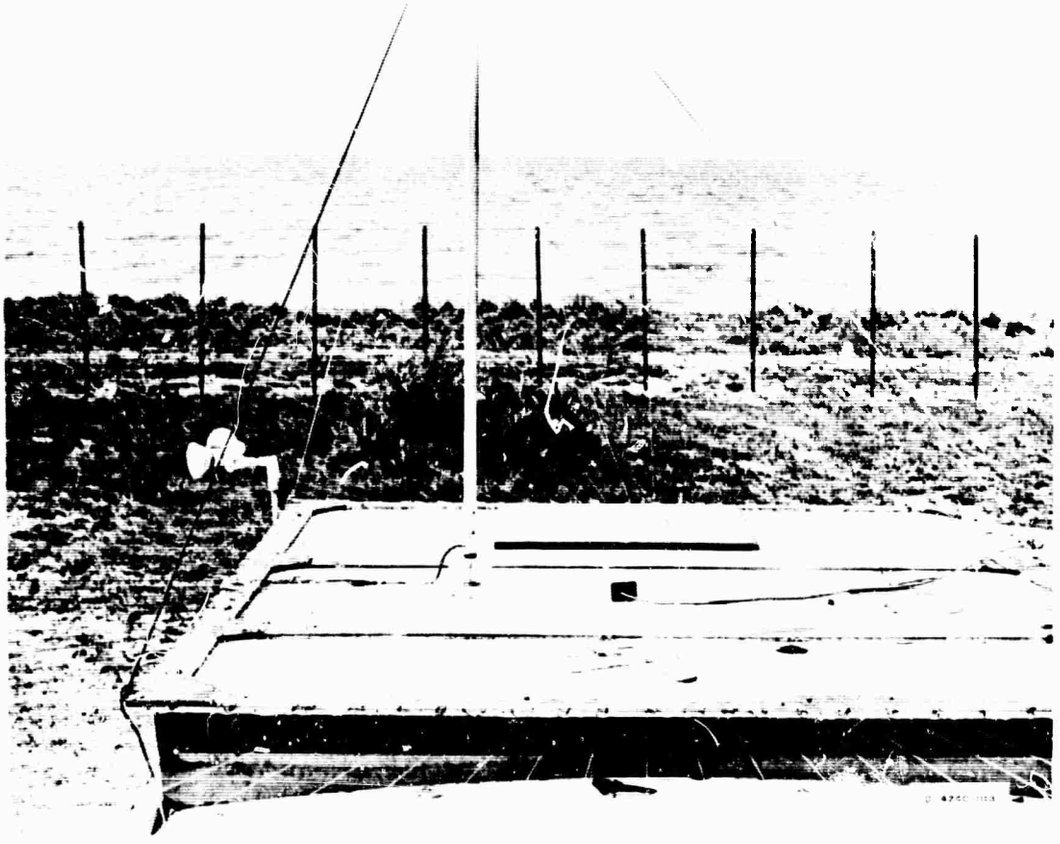

FIG. 33 ANTENNA INSTALLATION AT LAEM CHABANG

4. Equipment

The equipment consists of units mounted in five relay racks, plus some unmounted units. It is arranged as shown in Fig. 7. A list of these units is given in Table II, and its interconnections for signals and power are shown in Figs. 8, 9, and 10.

5. Initial Turn-on and Preliminary Adjustments

With units in their correct positions and all cabling in place, turn off all individual components which have power switches. Turn on main power at circuit breaker. Set the Line Voltage Regulator to 115 volts output (the Line Voltage Range Limiter must be set to trip out at 132 volts and 100 volts on the bench before installation). Turn on receivers (U-4, U-5, U-16, U-17). Turn on U-11 and U-12; set to 300 volts each. The front panel meters can be checked against a more accurate meter at

the terminals available on the fronts of these units. Note that U-11 must be 300 volts negative from ground; U-12 is 300 volts positive. Turn on the rest of the units. Turn switches on Function Shelves (U-3 and U-15) to REF. Turn VOLTS/CHART LINE switches on the Recorder Pen Drive Amplifiers to OFF. Check U-22, Timing and Control Unit at all test points (see Sec. II-B-5). Allow at least eight hours warm-up before final adjustments are made. During this time a check of recorder operation may be made including pen pressure and ink supply. Check the switch timer tabs for the proper timing sequence; normally two tabs in and two out, alternately, around the drum. Observe whether on and off periods are even, and adjust switch if indicated. The recording camera can be loaded with film and its focus and exposure set (28 inches focus; F8). The operation of the camera can also be tested by pressing the TEST button on U-21. The lamps should go on, and 2 seconds later the camera solenoid should operate (note whether this operation actually takes a picture and returns the cable release). Two seconds later the lamps should turn off. Also check system and antenna ground-plane grounding.

With initial warm-up completed, room temperature stabilized, and line regulation properly set and stabilized, check the setting of U-11 and U-12 and adjust to exactly 300 volts negative and positive, respectively. Connect the antenna to the Calibration Unit (U-6) with the special low-capacity cable provided. Proceed with calibration (Sec. 3.3).

D. Operation

The operators must check the equipment at the following times each day (see Sec. V1): 0600, 0700, 0800; 1100, 1200, 1300, 1400; 1700, 1800, 1900, 2000, 2100, and 2200. At each check they do the following things:

Step 1: Check each channel on HF for man-made interference. Retune if necessary to avoid it. (Use MODE switch on U-22 to switch to HF if right-hand pen is away from chart center.) If man-made interference can not be avoided, mark this information on the chart.

Step 2: Change attenuators on HF if indicated, to keep pens inside the calibrated range on the chart. Attenuation should be changed whenever the power pen approaches within one quarter inch of either edge of the chart. Mark chart with H and attenuator value (e.g., "H 20") on any channel when a change is made.

Step 3: Check attenuator settings on each channel at LF (put U-22 MODE switch on LF). Mark chart if attenuation is changed with L and attenuator value. Return U-22 MODE switch to TIME.

Step 4: Check line voltage (to be as near 115 volts as possible); room temperature (18 to 24°C, 22°C nominal); and ac voltage at TP-5 to TP-6 on Timing and Control Unit, U-22 (to be between 100 and 120 volts). The meters on U-11 and U-12 are also checked (both must read 300 volts).

The following items are logged by the operators:

(1) Time information at each stop and start of the recorders (logged on the chart). Time and date are both noted. This includes logging each time the line voltage range limits is tripped.

(2) Weather and any activities such as gasoline motor operation in the vicinity or local transmitter operation which might affect the data (logged on the chart).

(3) Time of equipment failure (logged on the chart). Whoever repairs equipment notes time of return to service and symptoms and cause of failure in the equipment log.

In addition, the operators do the following:

(1) Check REF position of function switch on all channels daily. Adjust VERNIER to give center of chart reading on power charts.

(2) Change the date tabs on the LFA each day. It is best to place the tabs at the first morning check (0600) and remove them at the last evening check (2200).

(3) Check regularly for adequacy of ink and chart paper supply.

(4) Periodically inspect the antenna and antenna input connections and wash the insulators if required.

(5) Call for technician or engineering help in case of equipment trouble.

In addition to the spare parts indicated in the succeeding section on maintenance, the following operational supplies are required

(1) Chart paper, 840 feet long, Brush No. 2961-80. Usage is about 80 feet per week.

(2) Red ink, Brush or Esterline-Angus.

(3) Film, Kodak P_us-X, 16-mm safety film. 50 or 100-foot reel. Usage is about 10 feet per week.

(4) Logging forms and books.

C. Calibration

Before calibration is begun, it should be determined that:

(1) Line voltage before regulation is between 110 and 120 volts; and after regulation, is 115 volts.

(2) Ambient temperature is between 18° and 24°C (65 to 75°F).

(3) Time power voltage (TP-5 to TP-6 of U-22) is between 100 and 120 volts. Also that +400V (TP-1 to TP-3) is between 385 and 415 volts and both -28V (TP-2 and TP-4 to TP-3) readings are between 27.5 and 28.5 volts.

(4) Pen pressures on recorders are within tolerance (see manual) and all pens are marking properly.

(5) U-11 and U-12 are set accurately on 300 volts.

(6) Local atmospheric noise is moderate, so that U-9 and U-29 can generate enough power to be well above local atmospheric noise. In general this means that calibration must be performed in the morning hours in the absence of thunderstorms.

At this point the chart papers for the previous week should be collected. If any of the results indicated in the following calibration procedures cannot be realized, equipment trouble may be assumed. Note that the most commonly required remedial action is the replacement of tubes in the dc amplifiers in the Brush Pen Drive Amplifiers or in the Function Shelves.

The calibration procedure is given below (see Appendix A for theory of calibration). The first part of this procedure is from the Brush Amplifier manual, but is included here for completeness. Turn switches on Function Shelves (U-3 and U-15) to REF.

1. Pen-Drive-Amplifier Calibration

Note that the arrangement of amplifiers in U-10 is, from left to right, as follows:

Top: Channel 1, voltage; Channel 1, power; Channel 2, voltage; Channel 2, power. Bottom: Channel 3, voltage; Channel 3, power; Channel 4, voltage; Channel 4, power. Note also that the 0.02-volt position is used for normal operation. It is generally advisable to calibrate all eight of these amplifiers before proceeding with the system calibration. It is assumed that the equipment has been turned on and allowed to stabilize for at least eight hours.

The Pen Drive Amplifier channels are balanced and calibrated as follows:

Step 1: Switch VOLTS/CHART LINE controls OFF and set PEN BIAS at the OUT position.

Step 2: Center oscillograph pen on chart, using B balance control. Rotate the CALIBRATION control rapidly to the left and right, and at the same time turn A (balance) back to the left slowly until no pen deflection is noted.

Step 3: Center the pen on the chart again, using the B (balance) control.

Step 4: Turn the VOLTS/CHART LINE switch to the "calibrate" (CAL) position and set the calibration control for 20 lines of deflection (full-scale left-edge deflection).

Step 5: Turn VOLTS/CHART LINE switch to OFF, turn PEN BIAS to the IN position. Turn the BIAS CONTROL until pen deflects approximately 3/16 inch beyond left edge of chart.

Step 6: Leave PEN BIAS in IN position and rotate VOLTS/CHART LINE switch to 0.02-volt position. The recorder amplifier is now ready for use. (Note that in many operations using the recorder as an indicator it is faster and more accurate to run the chart faster than normal while making an adjustment or taking a reading.)

2. HF Calibration

Step 1: Set the controls of the receivers (U-4, U-5, U-16, and U-17) to the following positions:

(1) RF gain--MAX

(2) Audio gain--MAX

(3) Selectivity--200 Hz

(4) Frequency control--VFO

(5) Limiter--OFF

(6) MOD CW Switch--MOD

(7) Send and Rec--REC

(8) Band switch--Appropriate band, see (9).

(9) Tuning control--0.53 MHz (Ch. 1) 2.3 MHz (Ch. 2) 5 MHz (Ch. 3) and 10 MHz (Ch. 4).

Step 2: Turn the MODE switch in the Timing and Control Unit (U-22) to HF.

Step 3: Adjust voltage and power strip controls as follows:

(a) Check that the function switch is in the reference position (REF).

(b) Set both sensitivity controls to the minimum position (CCW).

(c) Set the ZERO controls of the voltage and power strips to position the chart pens at the left and right edges of the chart strips respectively. (Since the voltage strip settings depend on the positioning of the power strip controls, the latter are adjusted first.)

(d) Set power SENSITIVITY control 1/4 turn CW and adjust the THRESHOLD and VERNIER controls for a center-of-chart reading.

(e) Set the function switch to the TCS position. Set attenuator to "0," connect the signal generator (U-9) to J5 (SIG GEN) of the speaker panel and connect J6 (SIG OUT) to J7 (CALIB) to inject a signal into the Calibrator Unit, and tune the generator to the desired frequency. Set the Calibrator Unit function switch to the nominal frequency desired (use 495 kHz for Ch. 1) and set the generator output level for an indication on the power strip chart. Use the attenuators on the speaker panel, not those on the signal

generator, to avoid changing frequency when changing level. Keep the signal generator set at 0 dB out on the meter and internal attenuator, and read the output level from the speaker panel attenuators. Note that generator tuning is critical and touchy. If the speaker selector switch is turned to the channel being adjusted and the T-pad is set for maximum sound (CW), a beat note can be heard as the signal generator is tuned through the center frequency. Tuning to the position of minimum beat frequency (zero beat) puts the generator on frequency. This will also be the point of maximum pen deflection toward the left. Return the function switch to REF position after this step. All four channels should be adjusted as above. The power strips have now been adjusted to facilitate their use as tuning indicators.

Step 4: Calibrate each channel in turn as follows:

(a) With the Calibrator function switch on ANT and the speaker on this channel, tune the receiver for the quietest (free from QRM) position near (within ±1% at most) the nominal center frequency of the channel being calibrated.

(b) Set the Calibrator function switch to the nominal frequency of this channel. Set the channel attenuator to zero dB and disconnect the antenna cable from the Calibrator input to eliminate capacitive coupling to the antenna. Set the GAIN control on the power strip so that the system noise (mostly from the preamplifier) makes a chart trace near the right-hand edge of the power chart. Depress the right-hand toggle switch on the Calibrator and adjust the variable transformer for full-scale indication on the diode current meter. Should the noise diode output fail to register on the power chart, increase power-strip GAIN setting until an indication is obtained. If the noise diode does not give an indication at least one-quarter inch (on the chart) to the left of the system noise indication, there is trouble--probably a weak tube in the receiver or power strip. It is much more important that the noise diode give a good indication

than that system noise be near the right-hand edge of the chart. Note: The noise diode indication is a part of the calibration factor and must appear on the power chart. The power strip GAIN adjustment at this time may be too great for typical atmospheric conditions; however, the attenuator pads eliminate this problem in normal operation.

(c) Set the channel attenuator in the 10-dB position for the remaining calibration sequence. This eliminates the system noise.

(d) With the Calibrator function switch in the frequency position desired, the function switch at TCS position, and the signal generator connected as described above, tune the generator for full-scale indication on the power chart corresponding to the selected frequency. Reduce the generator output level until an indication is just perceptible at the right-hand edge. Increase the generator output +30 dB and adjust the power SENSITIVITY for full-scale left-edge deflection.

(e) Reduce the generator output level in 5-dB steps and mark pen deflection on the chart. This will calibrate the chart in 5-dB steps.

(f) Reset the function switch to the REF position and reset threshold VERNIER for center-scale reading on chart.

(g) Turn the function switch back to the TCS position, set generator output level for an indication on the power chart approximately midscale. Adjust the voltage strip GAIN control for full-scale left-edge deflection on the voltage chart.

(h) Set function switch to the MAN position, set channel attenuator at 30 dB position, and adjust generator output level for full-scale left-edge deflection on the voltage chart.

(i) Step the generator output level down 20 dB and adjust the voltage strip SENSITIVITY for full-scale right-edge deflection. Set the generator back up 20 dB and then decrease in 2-dB steps and mark pen position on the chart. This will calibrate the chart in 2-dB steps.

(j) Slight interaction may occur during calibration between ZERO set, and GAIN and SENSITIVITY adjustments. Repeat (g), (h), and (i) above to be sure that they are still set as described. Some small further adjustment may be necessary. Return function switch to REF position.

Step 5: Make noise diode and stub factor measurements on each channel in turn, as follows:

(a) Set the meter-strip function switch to the TCS position, set attenuator at 0 dB, and set the Calibrator function switch at frequency position desired. Depress the noise diode switch and set diode current full-scale for an indication, and identify on the chart. Then turn off diode current and release the noise diode switch.

(b) With the generator connected as before, set the generator output level and frequency for the same chart mark indication. The output reading at the generator is the noise diode figure (typical figure = -91 dB).

(c) Set the attenuator in the 30-dB position to eliminate extraneous noise (daylight morning hours provide quiet conditions). Make certain the antenna is connected to the system and the Calibrator function switch is in the ANT position. Listen to speaker output and note pen on chart to be sure there is no man-made interference strong enough to be significant. Move tuning slightly if necessary. Disconnect the short cable from J6 (SIG OUT) on the speaker panel and connect the feed cable from the stub antenna to it. Set the output for an indication on the power strip--typically, a -10 or -20 dB generator level may be used. Note the generator reading and mark the pen position on the chart. Switch the Calibrator function switch to the frequency position required, disconnect the stub feed cable from J6, and reconnect J6 to J7 on the speaker panel. With the attenuator in the same position as above, adjust the generator output for the same pen position on the chart. Note and log the reading. The

difference between the two readings represents the stub factor. Example:

Generator output to stub = -10 dB at 30-dB position

Generator output to calibrator = -63 dB at 30-dB position

Stub factor = (-10 dB) - (-63 dB) = 53 dB.

(d) With the system calibrated and measurements of noise diode and stub factor known, the calibration factor is calculated by

$C = K + S - D$

C = Calibration factor

K = Constant for frequency

S = Stub factor

D = Noise diode figure.

Constants are tabulated below:

Frequency	Constant (K)	Frequency	Constant (K)
6 kHz	62.4	530 kHz	23.5
13 kHz	55.7	2.3 MHz	10.7
27 kHz	49.3	5 MHz	4.0
160 kHz	33.9	10 MHz	-9.6

From the examples given in Steps (b) and (c) above, and assuming a K value for 10 MHz:

$$C = K + S - D$$
$$= (-9.6) + (53) - (-91)$$
$$= 134.4 \text{ dB} \quad .$$

3. LF Calibration

For calibration at the low frequencies, turn the MODE switch on the Timing and Control Unit (U-22) to LF. Disconnect the HF signal generator, U-9, from J-5 and connect the cable from the HP 466A amplifier to J-5. Turn on the 466A amplifier, the HP 204B oscillator, and the HP 403B ac voltmeter (all parts of U-29, on top of the equipment racks). Set the oscillator to give 0-dB reading on the voltmeter. Compare voltmeter reading at 0 dB with that of the 406A generator at 160 kHz every three

months by adjusting to the same pen position on the Chan..el-1 power chart. Correct level to agree with 406A by adding a correction factor to readings. The difference should be about 11 dB. Note that no adjustments are to be made to the Function Shei es, except that the THRESHOLD and VERNIER controls should be checked for center-of-chart reading on the power charts when switches are in REF position.

Step 1: Set the Calibration Unit function switch to the 160-kHz position when calibrating channel 1; on the other three channels use the 13.3-kHz position.

Step 2: On each channel in turn:

(a) Set function switch to TCS position.

(b) Set LF attenuators to 0 dB, set potentiometer at rear of LF converter t. give a reading near the right-hand edge of the power chart.

(c) Inject diode noise and mark level. Inject signal and note equivalent signal level.

(d) Set channel attenuator to 10 dB. Ch ck REF for center position on chart. Inject signal and mark power chart in 5-dB steps. Do not adjust power strip.

(e) Set function switch to MAN position and mark voltage strip in 2-dB steps. Do not adjust voltage strip.

(f) Set input attenuator to 20 dB, disconnect short jumper cable from J6 on speaker panel, and connect stub antenna feeder cable to J6. Turn Calibrator function switch to ANT and make sure that the antenna cable is connected to the top of the Calibrator. Inject signal at high enough level to get chart reading.

(g) Reconnect jumper from J6 to J7 (after disconnecting stub antenna), turn Calibrator function switch to 13.3 kHz or 160 kHz as indicated, and inject signal to give same chart marking as obtained in (f). Compute and note stub factor as was done for HF. Turn function switch to TCL.

(h) Turn off the LF instruments. Note that two of them are battery powered, and the batteries will be used up far too quickly if this is forgotten. Disconnect the jumper cable from J7 on the speaker panel.

Turn the calibrator function switch to ANT and adjust each channel LF attenuator to get on-scale chart readings. Use the input attenuator to keep the lowest of the channel attenuator settings at 0 or 10 dB; this avoids possible overloading of the pre-amplifier. Note attenuator settings on charts with prefix L.

(i) Turn the MODE switch on the Timing and Control Unit (U-22) to HF. Using the speaker on each channel, make sure there is no man-made interference and set the HF attenuators to give on-scale readings on the charts. Note attenuator settings on charts with prefix H.

(j) Turn the MODE switch on the Timing and Control Unit to TIME. Note time and date on both charts.

4. LFA Calibration

To set the thresholds on the Lightning Flash Analyzer, proceed as follows:

Step 1: Set the Calibrate potentiometer on the Counter Drive Unit Chassis (U-27) to give a 1-volt reading on the front panel meter. Set both 1-volt threshold controls (ERA and CCIR) so that any decrease in setting will not allow the counters to operate when the red button on the Input Panel (U-7) is pressed. Note: allow a 5-second interval after button is pressed before pressing again to allow time for recharging.

Step 2: Repeat for 3- and 10-volt thresholds. Return Calibrate potentiometer to show "0" on the meter. This completes the equipment calibration.

At this time the Recording Camera must be wound up and if the footage counter is approaching 50 feet (one month's data) the film must be removed for processing, and fresh film loaded in the camera. If 100-foot rolls are being used it is best to rewind and cut the film so that 50 feet at a time are developed. The operating manual for the camera gives a detailed description of film loading and unloading.

BLANK PAGE

IV DATA COLLECTION AND REDUCTION

A. General

The two lengths of data chart are normally collected once a week (see Sec. III-C). Each has its calibration data at the beginning, and since it normally runs at 5 cm per hour, is about 30 feet long. The charts contain information as described below (see Fig. 34 for typical Channel 1 and 2 data, and Fig. 35 for typical Channel 3 and 4 data). The left-hand track is the time track, and a horizontal mark is made on it each 6 minutes. Reading from left to right, the next is the Channel-1 voltage track; the next is the Channel-1 power track. The next two are the Channel-2 voltage and power tracks respectively. The right-hand track (the "event" pen) is controlled by the relays that switch the equipment between high- and low-frequency recording. When the equipment is recording high-frequency information this pen is toward the left (toward the center of the chart). When recording low frequencies it moves to the right 1/8 inch. It normally changes each 30 minutes. The other chart is similar except that it has information from Channels 3 and 4. These channels operate at the following frequencies:

Channel	HF	LF
1	530 kHz	160 kHz
2	2.3 MHz	27 kHz
3	5 MHz	13 kHz
4	10 MHz	6 kHz

The charts also have pencilled on them the amounts of attenuation being used and notes regarding equipment shut-downs or contamination which cannot be avoided by retuning.

In normal scaling of the data, all traces that are contaminated by man-made noise are marked and not scaled. Man-made noise can usually be identified even if not noted by the operator because of the voltage pen

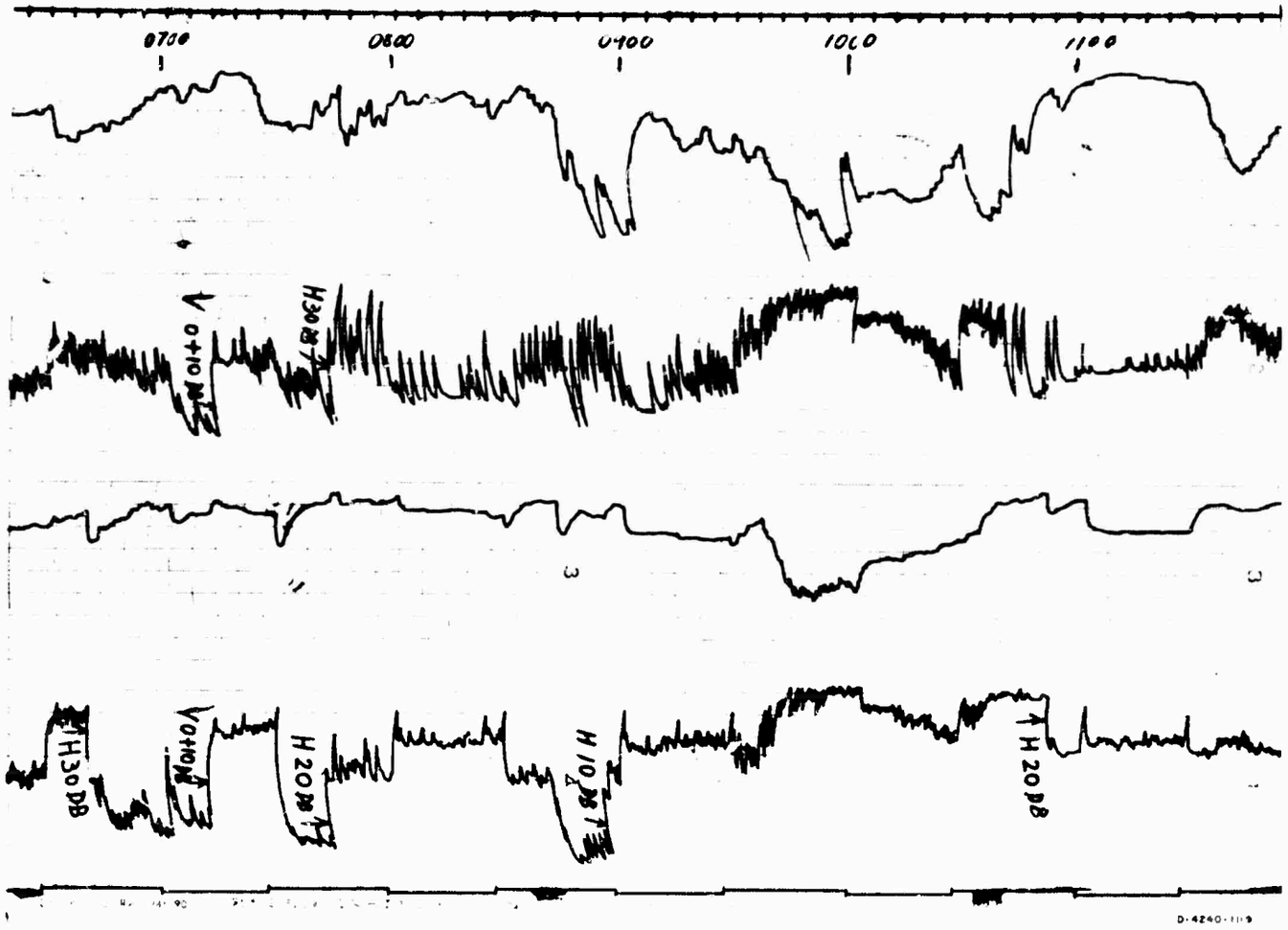

FIG. 34 TYPICAL DATA CHART, CHANNELS 1 AND 2

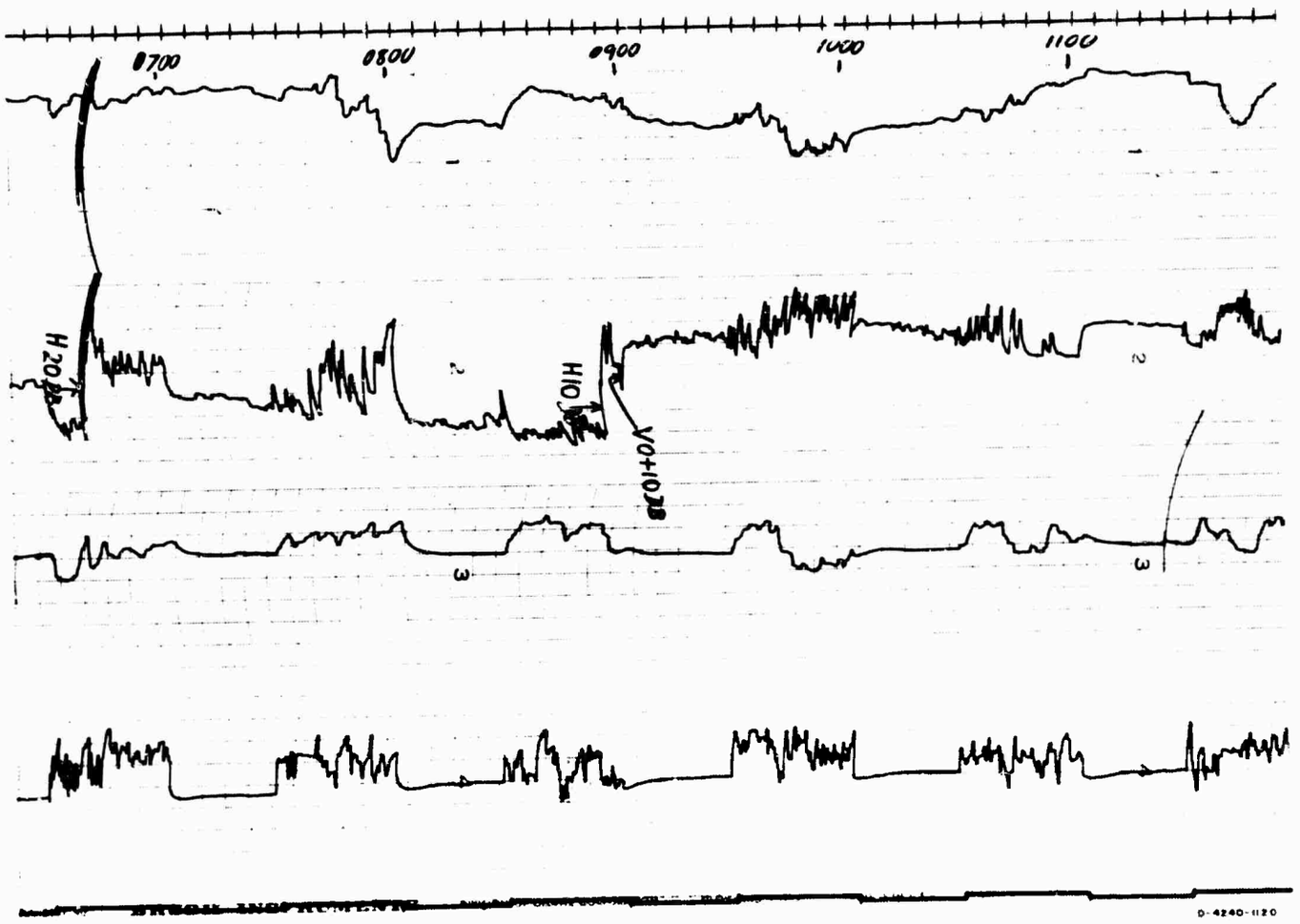

FIG. 35 TYPICAL DATA CHART, CHANNELS 3 AND 4

going off scale to the left and/or because the pen traces become straight, without the random wiggles characteristic of noise. It is assumed that any 15-minute sample in one hour is characteristic of that hour. On a normal chart, then, each hour will show a 30-minute sample for a high frequency and one for a low frequency. These are read (scaled) as a reading relative to the calibration scale, less (for the power strip only) any attenuation used. A visual estimate is made of the average value for the 30-minute period (2.5 cm, or about 1 inch). Note that the calibration marks on the voltage strip are 2 dB apart and those on the power strip are 5 dB apart (see Fig. 36).

These chart readings are then converted to the standard F_a and V_d values by incorporating the various calibration factors (refer to Appendix A for a discussion of theory). F_a equals Power (chart reading) + Calibration (C) factor or, from Eq. (A-14) of Appendix A, $F_a = R + (K + S - D)$. Note that K factors are constant for a given frequency, and that S and D are determined in the calibration. This gives a single number for each frequency to be added to the chart reading from the power strip to give F_a. V_d is equal to the (averaged) chart reading for each 30-minute sample. These are logged on separate data sheets for each frequency by date and hour (NBS form RN-12 or equivalent--see Figs. 37 and 38). The monthly summary of calibration factors is logged on NBS Form RN-6 or equivalent. See Figs. 39 and 40 for the forms used with this equipment, with typical values logged.

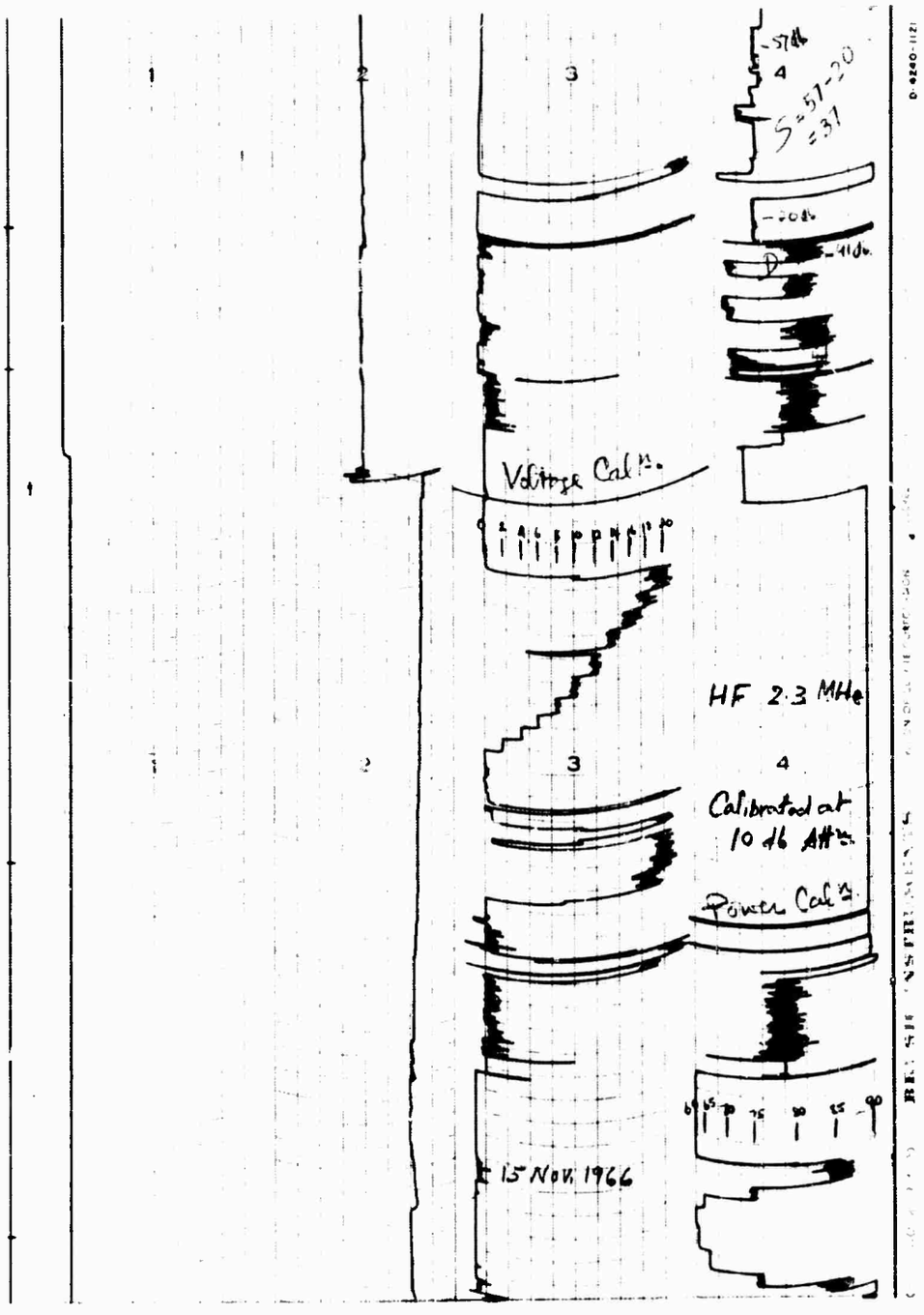

FIG. 36 TYPICAL CALIBRATION MARKING OF CHART

RADIO NOISE DATA

Station Laem Chabang Lat. 13.55°N Long 100.90°E Month May 19 66 Type of Measurement F_a

Freq. 0.53 MHz

Day	00	01	02	03	04	05	06	07	08	09	10	11	12	13	14	15	16	17	18	19	20	21	22	23
1		77	71	68			69	74	73	72	72	77	84	89	100	81	88	82	96	88	88	89	84	81
2	81	85	79	82		79	93	85	82		87	100	103	94	98	95	92	94	92					
3																		86	87	88	92	98	105	98
4	98	103	101	99	107	104	109	91	96	93	94	111	111	107	105	108	105	103	107	103	104	102	105	102
5	96	104	101	106	105	111	97	87	83	89	88	88	92		93	96	94	98	96	99	96	99	105	97
6	96	96	95	95	94	88	89	87	93	85	82	86	93		89	84	98	98	95	104	102	101	99	98
7	97	100	97	96	95	91	87	88	87					114	125	124	117	118	119	118	113	113		
8	86		107	104	96			93	94	87	93	95	97		105	108	112	114	113	108	107	104	105	106
9	107	106	103	105	103		87	88	86	84		91		97	107	116	109	108	114	113	102		106	105
10	99	102	101	99	104	96	97	99	102	96	93	96		104	105	109	104	106	115	109	111	108	107	106
11	107	110	110	112	110	91	88	93	92	85	88	86	85	94	9	81	84	86	92	99	101	100	99	100
12	104	103	100	100	98	88	86	93	87	91	86	90	97	98	96	94	97	106	107	104	100	99	103	105
13	101	99	98	99	100	94	93	94	93	97	95	92	95					92	90	92	90	86	89	86
14	86	86	89	92	87	85	78	82	93	90	92	92	93	98	97	108	101	100	105	106	107	109	110	107
15	106		112	112	106	103	94	93	91	115	109	111	107	104	108	107	111	111	107	111	111	107	114	95
16							83	83	74	73	82			105	99	103	99	88	92	94	98	98	98	94
17																85	85	94	93	95	95	97	89	91
18	88	86	93	89	90	86	81						82	85	92	90	86	90	91	87	89	92	90	88
19	95	93	89	89	84	84	94	91	85	90	89													
20	112	113	110	107	106		104	95		92	94	96	96	94	96	97	99			114	115	111	112	114
21	113	111	111	108	110		106	96	99	87	87	85	97	99	97	101		105	108	111	112	112	107	106
22	107	110	109	111	109	103	99	98	98	94	98	98	98	107	112		115	116	114	118	115		113	115
23	114	115	113	113	113	100	105	92	103	90	101		111	111	106	107	106	111	114	116	114	118	114	116
24	110	116	116	113	114		99	96	104	97	95	100	106								120	118	121	117
25	119	114	111	108	107	102	104	101	103	96			100	97	100	104	106		114	114	119	118	116	125
26	123	125	117	113	103	106					93	99						117	123	119	119	115	110	123
27	110	106	110	105	107	100	115	102	107	98	98	101	103				113	118	119	119	117	122	126	128
28	12	128	125	119	120	118	110	115	103	94	99	111	110	111	114	118	116	116	122	118	120	118	118	124
29	125	118	121	116	111	114	121	116	101	96	98	100	102	100	110	112	111	113	116	121	121	117	118	122
30	119	122	120	117	115	107	106	105	103	103	100	102	100	10[illegible]	10[illegible]	100	104	105	113	111	116	112	113	
31	111	106	105	103	101	111		114	99	102	106	102	105	101	110	111		104	107	112	113	110	111	111
No Obs	27	26	28	28	26	22	26	27	26	25	25	23	23	21	23	24	24	27	28	28	29	27	28	27
Upper Decile	123	122	119	113	114	112	110	112	103	102	101	111	110	111	112	116	115	117	119	119	120	118	118	124
MEDIAN	107	106	106	105	106	100	96	93	94	92	93	96	98	100	103	104	104	105	107	110	111	108	107	106
Lower Decile	86	86	89	89	90	85	81	83	82	84	88	86	85	92	92	85	86	86	91	89	91	93	89	86
Fam		106				98				94				102				106				108		

For Power Measurements

Daily tabulated values are in dB above zero chart deflection

To change to F_a in dB above KTB add C dB

Date:

1-7; C = 144
7-12; C = 152
13-18; C = 148
19-26; C = 155
26-31; C = 157

Scaled By Sunthorn

Computed By Niroj

RN-12

Commerce-Standards-Boulder, Colo.
D-4240-1123

FIG. 37 TYPICAL DATA SHEET, F_a

RADIO NOISE DATA

Station Laem Chabang Lat. 15.55°N Long 100.9°E Month May 1966 Type of Measurement V_d

Freq 0.53MHz

Day	00	01	02	03	04	05	06	07	08	09	10	11	12	13	14	15	16	17	18	19	20	21	22	23
1			1.0	1.0			1.0	1.0	1.0	1.0	2.0	4.0	2.0	4.0	6.0	2.0	2.0	1.0	3.0	1.0	1.0	1.0	1.0	1.0
2		1.0	1.0	1.0		1.0	1.0	2.0	2.0		3.0	5.0	4.0	1.0	1.0	1.0	4.0	1.0	1.0					
3																		4.0	3.0	2.0	2.0	3.0	3.0	3.0
4	4.0	6.0	6.0	5.0	6.0	10.0	7.0	6.0	11.0	12.0	15.0	11.0	8.0	5.0	6.0	7.0	7.0	5.0	6.0	3.0	6.0	5.0	6.0	4.0
5	7.0	6.0	5.0	9.0	11.0	10.0	19.0	6.0	9.0	9.0	8.0	8.0	7.0		12.0	12.0	6.0	3.0	4.0	3.0	4.0	4.0	4.0	4.0
6	3.0	4.0	5.0	6.0	6.0	3.0	3.0	7.0	11.0	12.0	10.0	10.0	16.0		9.0	6.0	10.0	7.0	4.0	7.0	4.0	5.0	4.0	5.0
7	6.0	5.0	6.0	5.0	6.0	6.0	8.0	5.0	6.0					15.0	11.0	9.0	17.0	11.0	9.0	7.0	3.0	3.0	3.0	6.0
8	7.0		9.0	8.0	5.0	3.0	2.0	2.0	6.0	3.0	3.0	2.0	8.0	8.0		14.0	9.0	15.0	16.0	9.0	6.0	7.0	7.0	7.0
9	6.0	5.0	4.0	3.0	4.0		6.0	4.0	9.0	9.0		3.0		12.0	16.0	11.0	11.0	8.0	1.0		6.0		3.0	4.0
10	3.0	4.0	3.0	5.0	5.0	4.0	2.0	3.0	3.0	4.0	14.0	7.0		5.0	7.0	3.0	4.0	4.0	4.0	4.0	2.0	2.0	3.0	3.0
11	3.0	2.0	3.0	3.0	3.0	3.0	3.0	2.0	2.0	4.0	5.0	4.0	3.0	6.0	6.0	3.0	3.0	1.0	2.0	3.0	3.0	5.0	5.0	6.0
12	4.0	4.0	4.0	6.0	8.0	6.0	3.0	4.0	2.0	5.0	4.0	5.0	5.0	7.0	6.0	2.0	2.0	2.0	3.0	2.0	3.0	3.0	3.0	3.0
13	2.0	3.0	4.0	4.0	4.0	3.0	4.0	4.0	7.0	6.0	4.0	5.0	8.0					1.0	1.0	1.0	3.0	3.0	4.0	4.0
14	3.0	3.0	6.0	7.0	5.0	7.0	3.0	3.0	6.0	11.0	11.0	10.0	7.0	5.0	5.0	4.0	4.0	3.0	3.0	3.0	3.0	3.0	3.0	3.0
15	5.0	7.0	6.0	6.0	4.0	3.0	5.0	5.0	5.0		15.0	11.0	11.0	8.0	8.0	7.0	8.0	10.0	10.0	11.0	13.0	13.0	5.0	6.0
16							3.0	5.0	3.0	6.0	15.0						14.0	8.0	3.0	3.0	3.0	3.0	7.0	6.0
17																6.0	4.0	7.0	3.0	4.0	8.0	11.0	6.0	4.0
18	3.0	6.0	10.0	8.0	8.0	3.0	6.0										9.0	5.0	4.0	4.0	5.0	4.0	7.0	8.0
19	7.0	8.0	6.0	9.0	9.0	3.0	3.0	5.0	3.0	6.0	6.0							4.0	2.0	4.0	10.0	5.0	5.0	5.0
20	6.0	6.0	6.0	7.0	7.0		4.0	4.0		6.0	5.0	4.0	4.0	6.0	6.0	3.0	3.0			3.0	3.0	4.0	5.0	6.0
21	6.0	7.0	4.0	5.0	6.0		3.0	3.0	4.0	4.0	4.0	5.0	5.0	7.0	7.0	7.0		2.0	4.0	5.0	4.0	5.0	4.0	5.0
22	6.0	5.0	4.0	5.0	4.0	2.0	4.0	4.0	3.0	3.0	4.0	4.0	7.0	12.0	15.0		10.0	6.0	4.0	4.0	5.0		4.0	4.0
23	4.0	4.0	3.0	4.0	5.0	2.0	2.0	2.0	4.0	3.0	4.0		15.0	13.0	14.0	13.0	10.0	4.0	9.0	7.0	7.0	5.0	5.0	8.0
24	5.0	8.0	6.0	6.0	5.0		4.0	4.0	3.0	3.0	3.0	3.0	11.0								4.0	5.0	3.0	4.0
25	8.0	4.0	4.0	3.0	4.0	4.0	1.0	3.0	4.0	4.0			5.0	4.0	4.0	6.0	3.0		4.0	4.0	6.0	4.0	3.0	8.0
26	7.0	8.0	6.0	6.0	3.0	2.0					5.0	7.0						2.0	2.0	3.0	2.0	4.0	4.0	3.0
27	3.0	6.0	4.0	5.0	6.0	8.0	2.0	3.0	3.0	1.0	3.0	12.0	10.0				16.0	15.0	13.0	11.0	3.0	9.0	11.0	11.0
28	14.0	12.0	12.0	8.0	9.0	5.0	3.0	3.0	2.0	4.0	5.0	5.0	13.0	6.0	11.0	10.0	3.0	1.0	1.0	1.0	1.0	2.0	3.0	5.0
29	6.0	8.0	7.0	6.0	6.0	3.0	1.0	4.0	3.0	3.0	3.0	7.0	7.0	8.0	9.0	10.0	4.0	3.0	3.0	5.0	6.0	5.0	4.0	5.0
30	5.0	7.0	8.0	9.0	7.0	5.0	8.0	7.0	7.0	10.0	8.0	6.0	5.0	10.0	8.0	7.0	4.0	3.0	2.0	2.0	2.0	2.0	5.0	
31	11.0	11.0	9.0	9.0	7.0	4.0		1.0	4.0	5.0	5.0	7.0	8.0	8.0	11.0	9.0		3.0	2.0	1.0	2.0	3.0	2.0	3.0
No Obs	26	26	28	28	26	23	27	27	26	24	25	23	22	20	21	22	24	28	29	28	30	28	30	29
Upper Decile	8.0	8.0	9.0	9.0	9.0	8.0	8.0	6.0	9.0	11.0	15.0	11.0	14.0	12.5	14.0	12.0	14.0	11.0	10.0	8.0	7.5	8.0	7.0	8.0
MEDIAN	55.0	6.0	55.0	6.0	6.0	3.0	3.0	4.0	4.0	4.5	5.0	6.0	7.0	7.0	8.0	7.0	5.0	4.0	3.0	3.5	3.5	4.0	4.0	5.0
Lower Decile	3.0	3.0	3.0	3.0	4.0	2.0	1.0	2.0	2.0	3.0	3.0	3.0	4.0	4.0	5.0	2.0	3.0	1.0	1.0	1.0	2.0	2.0	3.0	3.0
Fam																								

For Power Measurements

Daily tabulated values are in dB above zero chart deflection

To change to F_a in dB above KTB add _____ dB

Scaled By Wiroj

Computed By Wiroj

RN-12

Commerce-Boulder-Boulder, Colo.
0-6240-1124

FIG. 38 TYPICAL DATA SHEET, V_d

Station: Laem Chabang

Lat: 13 55° N

Month: March 1966

CALIBRATION FACTORS OF RADIO NOISE

Long: 100 90° E

Date	Frequency (MHz) 0.53 K	S	D	C	2.3 K	S	D	C	5 K	S	D	C	10 K	S	D	C	Operator
1																	
2																	
3																	
4																	
5																	
6																	
7	23.5	36	-92	151.5	10.7	30	-91	131.7	4.0	30	-93	127	-9.6	52	-93	135.4	Pinyo
8																	
9																	
10																	
11																	
12																	
13	23.5	32	-92	147.5	10.7	32	-91	133.7	4.0	38	-89	131	-9.6	56	-94	134.4	Pinyo
14																	
15																	
16																	
17																	
18																	
19	23.5	41	-90	154.5	10.7	30	-89	129.7	4.0	30	-92	126	-9.6	55	-91	136.4	Pinyo
20																	
21																	
22																	
23																	
24																	
25																	
26	23.5	41	-92	156.5	10.7	32	-89	131.7	4.0	31	-92	127	-9.6	57	-94	141.4	Pinyo
27																	
28																	
29																	
30																	
31																	

RN-12
List #
D-4240-1236

FIG. 39 TYPICAL LOG OF CALIBRATION FACTORS, MF AND HF

Station: Laem Chabang

Lat: 13 55° N

Month: December 1966

CALIBRATION FACTORS OF RADIO NOISE AT VLF AND LF

Long: 100 9° E

	Frequency (kHz)																
	6				13				27				160				
Date	K	S	D	C	K	S	D	C	K	S	D	C	K	S	D	C	Operator
1	62.4	53	-33	148	55.7	54	-34	141	49.3	48	-41	138	33.9	41	-40	115	Pinyo
2																	
3																	
4																	
5																	
6																	
7	62.4	51	-31	144	55.7	50	-33	139	49.3	48	-40	137	33.9	34	-40	108	Pinyo
8																	
9																	
10																	
11																	
12																	
13																	
14																	
15	62.4	61	-26	149	55.7	55	-30	141	49.3	45	-42	136	33.9	37	-43	114	Pinyo
16																	
17																	
18																	
19																	
20																	
21																	
22	62.4	53	-33	148	55.7	54	-34	144	49.3	43	-41	138	33.9	34	-53	121	Pinyo
23																	
24																	
25																	
26																	
27																	
28																	
29	62.4	51	-33	146	55.7	56	-31	143	49.3	46	-42	137	33.9	41	-40	115	Pinyo
30																	
31																	

9-4240-1237

FIG. 40 TYPICAL LOG OF CALIBRATION FACTORS, LF AND VLF

B. Determination of Median and Decile Values (See Ref. 7, pp 107-109)

After readings have been listed in order according to size, the median, lower, and upper decile values are found by use of Table III. Round off all values to the nearest whole number.

EXAMPLE: Take a group of 17 readings, as follows:

20 20 22 24 21 24 28 30 30 32 32 34 34 36 40 48 54

Median = 9th value = 30

Upper Decile = 2nd value from top MINUS 20% (2nd - 3rd)

= 48 - 20% (48 - 40) = 48 - (20% of 8)

= 48 - 1.6 = 46

Lower Decile = 2nd value from bottom PLUS 20% (3rd - 2nd)

= 20 + 20% (22 - 20) = 20 = (20% of 2)

= 20 + 0.4 = 20

Table I.I

TABLE FOR DETERMINING MEDIAN, LOWER, AND UPPER DECILE VALUES

No. of Readings in Group	Position of Median Value	Upper Decile = No. from Top MINUS Correction	Lower Decile = No. from Bottom PLUS Correction
31	16th	3rd - 60% (3rd - 4th)	3rd + 60% (4th - 3rd)
30	$\frac{15th + 16th}{2}$	3rd - 50% (3rd - 4th)	3rd + 50% (4th - 3rd)
29	15th	3rd - 40% (3rd - 4th)	3rd + 40% (4th - 3rd)
28	$\frac{14th + 15th}{2}$	3rd - 30% (3rd - 4th)	3rd + 30% (4th - 3rd)
27	14th	3rd - 20% (3rd - 4th)	3rd + 20% (4th - 3rd)
26	$\frac{13th + 14th}{2}$	3rd - 10% (3rd - 4th)	3rd + 10% (4th - 3rd)
25	13th	3rd	3rd
24	$\frac{12th + 13th}{2}$	2nd - 90% (2nd - 3rd)	2nd + 90% (3rd - 2nd)
23	12th	2nd - 80% (2nd - 3rd)	2nd + 80% (3rd - 2nd)
22	$\frac{11th + 12th}{2}$	2nd - 70% (2nd - 3rd)	2nd + 70% (3rd - 2nd)
21	11th	2nd - 60% (2nd - 3rd)	2nd + 60% (3rd - 2nd)
20	$\frac{10th + 11th}{2}$	2nd - 50% (2nd - 3rd)	2nd + 50% (3rd - 2nd)
19	10th	2nd - 40% (2nd - 3rd)	2nd + 40% (3rd - 2nd)
18	$\frac{9th + 10th}{2}$	2nd - 30% (2nd - 3rd)	2nd + 30% (3rd - 2nd)
17	9th	2nd - 20% (2nd - 3rd)	2nd + 20% (3rd - 2nd)
16	$\frac{8th + 9th}{2}$	2nd - 10% (2nd - 3rd)	2nd + 10% (3rd - 2nd)
15	8th	2nd	2nd
14	$\frac{7th + 8th}{2}$	*	*
13	7th	*	*
12	$\frac{6th + 7th}{2}$	*	*
11	6th	*	*
10	$\frac{5th + 6th}{2}$	*	*
9	5th	*	*
8	$\frac{4th + 5th}{2}$	*	*
7	4th	*	*
6	$\frac{3rd + 4th}{2}$	*	*
5	3rd	*	*
4	$\frac{2nd + 3rd}{2}$	*	*
3	2nd	*	*
2	$\frac{1st + 2nd}{2}$	*	*

*Decile measurements are not significant for a small number of readings.

BLANK PAGE

V MAINTENANCE AND TROUBLE SHOOTING

Table II gives a list of the units in the ARN-3 and indicates those units for which manufacturers' manuals are provided. These manuals are to be considered part of this manual.

The normal operating and calibrating procedures described in Sec. III will nearly always indicate trouble if present. Any change in diode factor of more than 2 or 3 dB should be viewed with suspicion and traced to its source. Note that a difference in GAIN setting in the power strip will change the stub and calibration factors, but in such a way that F_a will not change. Tube failure in dc amplifiers is the commonest trouble.

It must be emphasized that cleanliness of the recorder pen and ink systems, including the reservoirs, is essential.

The following tabulation (Table IV) should be helpful in locating trouble. It contains voltage and resistance measurements to ground for all units for which there is no separate manual. Measurements were made with a Hewlett-Packard Model 410B VTVM.

Tables V and VI list all components that might be expected to have a definite life or a reasonable failure probability. They cover all the units in the equipment to facilitate setting up and maintaining spare-parts stores. The total tube and fuse complement is summarized for the same reason. Quantities are for one complete installation.

Table IV

TYPICAL VOLTAGE AND RESISTANCE VALUES

Unit	Loc.	Type	Voltage from Pin to Ground									Resistance from Pin to Ground								
			Pin 1	Pin 2	Pin 3	Pin 4	Pin 5	Pin 6	Pin 7	Pin 8	Pin 9	Pin 1	Pin 2	Pin 3	Pin 4	Pin 5	Pin 6	Pin 7	Pin 8	Pin 9
CHANNEL 1 160 kHz	V1	6BA6	-3.6	0	FIL	FIL	210	128	0	--	--	∞	0	FIL	FIL	290K	350K	0	--	--
	V2	6BA6	-2.3	0	FIL	FIL	209	129	0	--	--	∞	0	FIL	FIL	500K	500K	0	--	--
	V3	6BE6	0	1.6	FIL	FIL	145	100	0	--	--	100K	150	FIL	FIL	3.6M	690K	500K	--	--
	V4	12AT7	120	-1.75	0	FIL	FIL	122	-1.6	0	FIL	115K	1M	0	FIL	FIL	1M	1M	0	FIL
	V5	6C4	197	NC	FIL	FIL	197	90	97	--	--	7M	∞	FIL	FIL	1M	500K	40K	--	--
	V6	OA2	152	0	NC	0	152	NC	0	--	--	200K	0	∞	0	7.2M	∞	0	--	--
	V7	OC2	220	152	76	152	220	87	152	--	--	13M	6M	∞	1.7M	1.4M	∞	1.4M	--	--
CHANNEL 2 27 kHz	V1	6BA6	-1.3	0	FIL	FIL	202	100	0	--	--	∞	0	FIL	FIL	2.5M	2.3M	0	--	--
	V2	6BA6	-1.95	0	FIL	FIL	212	102	0	--	--	∞	0	FIL	FIL	1.7M	1.6M	0	--	--
	V3	6BE6	0	1.6	FIL	FIL	145	95	0	--	--	98K	150	FIL	FIL	1.8M	1.6M	500K	--	--
	V4	12AT7	100	-2.1	0	FIL	FIL	100	-1	0	FIL	1.4M	1M	0	FIL	FIL	1.1M	1M	0	FIL
	V5	6C4	200	NC	FIL	FIL	200	92	98	--	--	1.7M	0	FIL	FIL	1.5M	500K	42K	--	--
	V6	OA2	152	0	0	0	152	0	0	--	--	1.3M	0	∞	0	1.1M	∞	0	--	--
	V7	OC2	217	152	70	152	217	79	152	--	--	1.7M	1.6M	∞	1.4M	1.4M	∞	1.3M	--	--
CHANNEL 3 13 kHz	V1	6BA6	-1.3	0	FIL	FIL	202	100	0	--	--	∞	0	FIL	FIL	800K	900K	0	--	--
	V2	6BA6	-1.95	0	FIL	FIL	212	102	0	--	--	∞	0	FIL	FIL	1.1M	1.1M	0	--	--
	V3	6BE6	0	1.6	FIL	FIL	145	95	0	--	--	100K	150	FIL	FIL	200M	100M	500K	--	--
	V4	12AT7	100	-2.1	0	FIL	FIL	100	-1	0	FIL	2M	1M	0	FIL	FIL	2M	1M	0	FIL
	V5	6C4	200	NC	FIL	FIL	200	92	98	--	--	1.8M	0	FIL	FIL	1.7M	500K	41K	--	--
	V6	OA2	152	0	0	0	152	0	0	--	--	3.7M	0	∞	0	3.6M	∞	0	--	--
	V7	OC2	217	152	70	152	217	79	152	--	--	6.2M	6M	∞	5.4M	5.5M	∞	5.5M	--	--
CHANNEL 4 6 kHz	V1	6BA6	-1.3	0	FIL	FIL	213	103	0	--	--	∞	0	FIL	FIL	1.9M	2M	0	--	--
	V2	6BA6	-1.6	0	FIL	FIL	213	103	0	--	--	∞	0	FIL	FIL	1.6M	1.6M	0	--	--
	V3	6BE6	0	1.7	FIL	FIL	145	94	0	--	--	100K	150	FIL	FIL	100M	90M	500K	--	--
	V1	12AT7	122	-1.5	0	FIL	FIL	122	-1.4	0	FIL	9M	1M	0	FIL	FIL	8.5M	1M	0	FIL
	V5	6C4	204	0	FIL	FIL	202	94	100	--	--	8M	0	FIL	FIL	7.5M	530K	0	--	--
	V6	OA2	150	0	0	0	150	0	0	--	--	7.5M	0	∞	0	9M	∞	0	--	--
	V7	OC2	220	150	70	150	220	72	150	--	--	8M	7M	∞	6.5M	6.5M	∞	6.3M	--	--

Table IV (Continued)

Unit	Control Position	Loc.	Type	Voltage from Pin to Ground									Resistance from Pin to Ground								
				Pin 1	Pin 2	Pin 3	Pin 4	Pin 5	Pin 6	Pin 7	Pin 8	Pin 9	Pin 1	Pin 2	Pin 3	Pin 4	Pin 5	Pin 6	Pin 7	Pin 8	Pin 9
Power-Metering Strip	*	V1	6AH6	0	1.8	FIL	FIL	300	143	1.8	--	--	100K	160	FIL	FIL	142K	210K	160	--	--
	*	V2	6BJ6	-3.75	0	FIL	FIL	300	105	0	--	--	8400	0	FIL	FIL	143K	77K	0	--	--
	*	V3	6BJ6	-3.7	0	FIL	FIL	300	105	0	--	--	8400	0	FIL	FIL	143K	77K	0	--	--
	*	V4	6AH6	0	2.3	FIL	FIL	300	146	2.2	--	--	101K	160	FIL	FIL	142K	210K	160	--	--
	*	V5	6BQ5	NC	0	8.4	FIL	FIL	NC	300	NC	300	NC 300K	300K	160	FIL	FIL	NC	150K	NC	150K
	*	V6	3A2	FIL -220	FIL -220	NC	NC	NC	NC	NC	PLATE CAP -210	--	110K	110K	NC	NC 110K	NC 110K	NC 110K	NC	PLATE CAP 2M	--
	*	V7	5755	-130	-220	-228	FIL -175	FIL -175	-220	-220	-130	FIL -175	20.8M	21.5M	NC	0	0	1M	21.5M	20.8M	0
	*	V8	12AT7	-23	-130	-140	FIL -175	FIL -175	-30	-130	-130	FIL -175	20.2K	20.8M	160K	FIL	FIL	20K	20.4M	150K	0
	CAL	V9	12AT7	140	-30.5	-28.5	FIL	FIL	140	0	2.3	FIL	32M	20K	900K	FIL	FIL	32M	20.8K	3400	FIL
	CW	V9	12AT7	140	-30.5	-28.5	FIL	FIL	140	0	2.3	FIL	32M	20K	900K	FIL	FIL	32M	0	5400	FIL
	CCW	V9	12AT7	140	-30.5	-28.5	FIL	FIL	140	0	2.3	FIL	32M	20K	900K	FIL	FIL	32M	34K	1200	FIL
Voltage-Metering Strip	CAL	V1	6AH6	0	3.8	FIL	FIL	292	210	3.8	--	--	100K	2400	FIL	FIL	3.2M	3.2M	2400	--	--
	CW	V1	6AH6	0	3.8	FIL	FIL	292	210	3.8	--	--	100K	5500	FIL	FIL	3.2M	3.2M	5500	--	--
	CCW	V1	6AH6	0	3.8	FIL	FIL	292	210	3.8	--	--	100K	160	FIL	FIL	3.2M	3.2M	160	--	--
	*	V2	6AH6	0	1.8	FIL	FIL	285	137	1.8	--	--	100K	150	FIL	FIL	3.2M	3.2M	150	--	--
	*	V3	6BQ5	NC	0	8	FIL	FIL	NC	299	0	299	NC	120K	160	FIL	FIL	NC	3.3M	NC	3.3M
	*	V4	3A2	FIL 0	FIL 0	NC	NC	NC	NC	NC	PLATE CAP -20 -150	--	NC 0	FIL	NC	NC 0	NC 0	NC 0	NC	PLATE CAP 1M	--
	*	V5	OA2	0	-40	0	-40	0	0	-40	--	--	NC	150M	NC	NC	0	NC	NC	--	--
	*	V6	12AX7	175	82	82	FIL	FIL	112	-40	-40	FIL	4M	6.5M	200K	FIL	FIL	4.2M	150M	700K	FIL
	CAL	V7	5814	285	118	122	FIL	FIL	285	70	81.5	FIL	3.2M	4M	19K	FIL	FIL	3.2M	2M	200K	FIL
	CW	V7	5814	285	118	122	FIL	FIL	285	70	81.5	FIL	3.2M	4M	23K	FIL	FIL	3.2M	2M	200K	FIL
	CCW	V7	5814	285	118	122	FIL	FIL	285	70	81.5	FIL	3.2M	4M	15K	FIL	FIL	3.2M	2M	200K	FIL
U-20	*	V1	5U4	NC	300	NC	400ac	NC	400ac	NC	300	--	∞	200K	∞	55	∞	55	∞	200K	--
U-7	*	V1	12AX7	280	102	103	FIL	FIL	280	102	103	FIL	2000	1.1M	73K	8.5	8.5	2000	1.1M	73K	4.3
	*	V2	12AX7	280	102	103	FIL	FIL	280	102	103	FIL	550	1.15M	150K	7	7	550	1.1M	150K	1.0

*Position of control does not affect the value read.

Table IV (Continued)

			Voltage from Pin to Ground									Resistance from Pin to Ground								
Unit	Loc.	Type	Pin 1	Pin 2	Pin 3	Pin 4	Pin 5	Pin 6	Pin 7	Pin 8	Pin 9	Pin 1	Pin 2	Pin 3	Pin 4	Pin 5	Pin 6	Pin 7	Pin 8	Pin 9
	V1	5U4	NC	590	NC	ac	NC	ac	NC	590	--	NC	800K	5	16	NC	16	NC	800K	--
	V2	5U4	NC	590	NC	ac	NC	ac	NC	590	--	NC	800K	10M	16	NC	16	10K	800K	--
	V3	OA2	300	160	86	160	300	160	160	--	--	5M	∞	NC	NC	NC	NC	∞	--	--
	V4	OA2	160	0	46	0	160	42	0	--	--	--	0	NC	NC	NC	NC	0	--	--
	V5	12AU7	238	0	10	FIL	FIL	134	0	6.4	FIL	32M	500M	1K	6200	6200	44M	15K	3K	6300
U-22	V6	807	FIL	317	-27.7	0	FIL	PLATE CAP 480	--	--	--	6200	5M	5000	0	6200	PLATE CAP 500K	--	-	--
	V7	807	FIL	317	-28	0	FIL	PLATE CAP 480	--	--	--	6200	5M	5000	0	6200	PLATE CAP 500K	--	--	--
	V8	12AU7	228	0	38	FIL	FIL	105	37.5	38	FIL	2.6M	30K	6200	FIL	FIL	4M	2.2M	6000	FIL
	V9	12AU7	228	0	38	FIL	FIL	107	37.5	38	FIL	1M	28K	6000	FIL	FIL	3M	2.2M	6000	FIL
	V1	OA2	150	0	17.2	0	150	12.5	0	--	--	90K	28K	NC	28K	90K	NC	28K	--	--
	V2	OA2	300	150	100	150	300	120	150	--	--	28K	0	NC	NC	28K	NC	NC	--	--
	V3	12AX7	128	0	1	FIL	FIL	193	128	128	FIL	400K	460K	1600	FIL	FIL	150K	400K	82K	FIL
	V4	12AU7	302	0	31	FIL	FIL	120	31	31	FIL	140K	85K	3600	FIL	FIL	130K	1M	3600	FIL
U-27	V5	12AX7	135	0	1	FIL	FIL	207	135	135	FIL	400K	230K	1600	FIL	FIL	150K	400K	82K	FIL
Control Position CCW	V6	12AU7	300	0	31	FIL	FIL	128	31	31	FIL	140K	85K	3600	FIL	FIL	130K	1M	3600	FIL
	V7	12AX7	125	0	1	FIL	FIL	186	125	124	FIL	400K	500	1600	FIL	FIL	150K	400K	82K	FIL
	V8	12AU7	290	0	32	FIL	FIL	120	32	32	FIL	140K	85K	3600	FIL	FIL	130K	1M	3600	FIL
	V9	12AX7	130	0	1	FIL	FIL	195	129	129	FIL	400K	50K	1600	FIL	FIL	150K	400K	82K	FIL
	V10	12AU7	310	0	31	FIL	FIL	120	31	31	FIL	140K	85K	3600	FIL	FIL	130K	1M	3600	FIL
	V11	12AX7	130	0	1	FIL	FIL	195	131	130	FIL	400K	23K	1600	FIL	FIL	150K	400K	82K	FIL
	V12	12AU7	310	0	32	FIL	FIL	118	31	32	FIL	140K	85K	3600	FIL	FIL	130K	1M	3600	FIL
	V13	12AX7	137	0	1	FIL	FIL	204	137	137	FIL	400K	500	1600	FIL	FIL	150K	400K	82K	FIL
	V14	12AU7	310	0	31	FIL	FIL	120	31	31	FIL	140K	85K	3600	FIL	FIL	130K	1M	3600	FIL
	V15	5U4	NC	400	NC	ac	NC	ac	NC	400	--	NC	90K	NC	44	NC	40	NC	100K	--
	V1	OA2	153	NC	NC	NC	NC	NC	0	--	--	43K	G	NC	0	43K	NC	0	--	--
U-28	V2	OA2	0	-150	NC	NC	0	NC	-150	--	--	0	86K	NC	NC	0	NC	86K	--	--
	V3	12AT7	74	0.4	0	FIL	FIL	87.5	0	0	FIL	86K	67K	0	FIL	FIL	86K	69K	0	FIL

Table IV (Continued)

Unit	Location	Type	Voltage to Ground			Resistance to Ground		
			Emitter	Base	Collector	Emitter	Base	Collector
U-7	Q1	2N3823	3.1	3.4	6.6	1060	1M	1200
	Q2	TIXM2067	7.0	6.6	3.1	3900	1200	1000
	Q3	2N3563	1.6	2.3	5.9	1000	1700	4800
	Q4	2N3563	5.1	5.9	8.9	750	4800	3200
U-13	Q1	2N3962	3.2	3.4	8.0	1200	12K	3100
	Q2	TIXM2068	8.3	8	3.2	7300	3100	1200
	Q3	2N3563	2.0	2.6	6.8	1000	1600	7500
	Q4	2N3563	6.0	6.8	10	750	7500	6500
U-26	Q1	2N3053	28.5	29	30	140	500K	27K
	Q2	2N301A	25.2	28.5	0	240	140	82
	Q3	2N3053	28.5	29	30	140	500K	27K
	Q4	2N301A	25.2	28.5	0	240	140	82
	Q5	2N3053	28.5	29	30	140	500K	27K
	Q6	2N301A	25.2	28.5	0	240	140	82
	Q7	2N3053	28.5	29	30	140	500K	27K
	Q8	2N301A	25.2	28.5	0	240	140	82
	Q9	2N3053	28.5	29	30	140	500K	27K
	Q10	2N301A	25.2	28.5	0	240	140	82
	Q11	2N3053	28.5	29	30	140	500K	27K
	Q12	2N301A	25.2	28.5	0	240	140	82
U-3 U-15	Q1	2N3053	-25.5	-25	-3.4	230K	570K	32K

Table V

LIST OF TUBES AND FUSES

Tube Type	Quantity	Fuse Size 3AG	Quantity
0A2	19	150 mA	4
0C2	4	1/4 amp	2
3A2	8	3/8 amp	4
5R4	4	1/2 amp	7
5U4GB	4	2 amp	2
5Y3	2	2-1/2 amp	1
6AC7	4	3 amp	3
6AH6	16	4 amp	1
6AL5	12	5 amp	1
6AS7G	2	10 amp	1
6AW8	5		
6BA6	36	1.6 amp S.B.	4
6BE6	12	2 amp S.B.	2
6BJ6	8	7 amp S.B.	1
6BQ5	8		
6C4	16		
6CL6	2		
6V6	4		
12AT7	32		
12AU7	14		
12AX7	21		
12B4A	7		
807	2		
5651	3		
5687	16		
5727/2D21W	2		
5751	3		
5755	4		
5814	4		
5947/TT-2	1		

Table VI

MAINTENANCE COMPONENTS LISTED BY UNIT

Unit	Tube Type	Quantity	Transistor Type	Quantity	Diode Type	Quantity	Miscellaneous	Quantity
U-1 or U-30 Low Frequency Converter	6C2 0A2 6BA6 6BE6 12AT7 6C4	4 4 8 4 4					Capacitors 10 µf 450V Tubular Electrolytic Pilot Lamp #44 Fuse, 150 mA, size 3AG	28 1 4
U-20 Power Supply for Low Frequency Converter Laem Chabang	5U4GB	1					Capacitor 2 × 40 µf 500V electrolytic Fuse, 3 amp. size 3AG	1 1
U-31 Power Supply for Low Frequency Converter Portable					1N4005	16	Capacitor 2 × 40 µf 500V electrolytic Pilot Lamp #44 Fuse 0.5 amp, size 3AG	2 4 4
U-2 and U-14 Recorder	5Y3GT	2					Pen, Brush No. RA2821-31 Ink tubing, Brush 126270 Pen, Brush RA2871-30 Surge Suppressor, Brush 114147-5 Fuse, 3 amp, size 3AG Fuse, 1/4 amp, size 3AG	8 4 4 4 2 2
U-3 and U-15 Function Shelf	6AH6 6BQ5 3A2 0A2 12AX7 5814A 5755 12AT7 6BJ6	16 8 8 4 4 4 4 8 8	2N3053	4	1N4002 1N4736 1N3011A 1N3005A	52 4 4 8		
U-4, U-5, U-16, U-17 Receiver	6BA6 6BE6 6C4 6AC7 6AL5 5R4GY 0A2 12AU7 6V6	28 8 12 4 12 4 4 4 4					Dial lamp #47 Fuse, 1.6 amp S.B. size 3AG Fuse, 3/8 amp size 3AG Capacitor, 3 × 20 µf 450V electrolytic	16 4 4 4

Table VI (Continued)

Unit	Tube Type	Quantity	Transistor Type	Quantity	Diode Type	Quantity	Miscellaneous	Quantity
U-6 Cal Unit	5947/ TT-2	 1					Capacitor 20 _f 450V tubular electrolytic	 1
U-7 Input Panel	12AX7	2	2N3823 TIXM206 2N3563	1 1 2				
U-8 Signal Generator 606A	6AW8 12AT7 6CL6 12B4A 5651	5 4 2 7 1			1N90	3	Capacitor, 3 × 10 450V electrolytic Capacitor, 120; 40 at 450V electrolytic Lamp, pilot Fuse, 2 amp S.B. size 3AG	 1 3 1 1
U-10 Recorder Pen Drive (Amplifier)	12AX7 12AT7 5687 6AS7/G 5651	9 16 16 2 1	2N176	5	1N2071 TM-7 1N1524	4 4 1	Battery, Mercury 2.69V Mallory TR-132R 3 × 20 450V electrolytic Fuse, 4 amp size 3AG	 16 1 1
U-11 Power Supply 300V Neg (Kepco)			2N174 2N1131A 2N338 2N396A	1 1 3 1	CEC-105 CEC-7050 PT-5 SV125 1N3026B 1N821 Kepco No. 124-0178	3 4 5 1 1 1 1	Capacitors 280 _f 500V (43F1633CA3) 40 _f 540V (40B865) Fuse, 1/2 amp S.B. size 3AG Fuse, 7 amp S.B size 3AG Fuse, 2 amp S.B. size 3AG	 1 1 1 1 1
U-12 Power Supply 300V Pos. (Kepco)			2N338 2N1131A 2N1167	4 4 3	CS124ER CS124E PT-5 CEC-105 10M82Z Kepco No. 124-0178 1N821	2 2 3 8 1 2 1	Capacitors 750 _f 440V (40-B810) 5 _f 660V ac (49F831) Fuse, 10 amp size 3AG Fuse 2 amp size 3AG Relay, 3p 2t Omega 200 PC3CX	 2 1 1 1 1
U-13 Attenuator Panel			2N3962 TIXM206 2N2563	1 1 2				
U-21 Camera Control					10DB6A	1	Fuse, 2-1/2 amp size 3AG Amperite Time Delay Relays 115 N02T 115 C2T Relay, P & B KRP11AG 24V dc	1 1 1 1

Table VI (Continued)

Unit	Tube Type	Quantity	Transistor Type	Quantity	Diode Type	Quantity	Miscellaneous	Quantity
U-23 Relay and Isolator Filament Power Supply					1N4005	1	Fuse, 1/2 amp size 3AG	1
U-18 and U-24	5751 5651WA 5727/ 2D21W CA2WA	2 1 2 1			Bradley SE3P20H 1N352	 2 2	Fuse, 1/2 amp size 3AG	2
U-25 Recording Camera LFA							Flood Lamp, 150W	2
U-26 Display Panel LFA			2N3053 2N301A	6 6	1N4005	16		
U-27 Counter Drive Unit LFA	5U4 0A2 12AX7 12AU7	1 2 6 6			1N4005	12	Amperite 115 N030 Time Delay Relay Capacitors, 10 μf 450V, tubular electrolytic 8 μf 450V, tubular electrolytic 2 × 30 μf 450V, electrolytic Lamp #44 Fuse, 2 amp size 3AG	1 7 6 1 1 2
U-28 Line Voltage Range Limiter	0A2 12AU7	2 1			1N4005	8	Lamp #756 Capacitors, 40 μf 450V tubular electrolytic	1 2
U-29, HP204B OSC			2N1516 2N2189 2N1516/ OC170 S3056 T51602	1 1 1 1 1	G29A16 HD1445 CSD2693 G29A18 G29G83	1 5 10 1 2	Battery, Mercury, 5 cell 6.75V, HP1420-0010	1
U-29 HP466A Amplifier			2N522A OC170 2N274/ OC170 2N650	1 2 2 1	HP G29M-7 BU 1N90 HP G29G-4	2 2 1		
U-29 HP403B			3748 2N2189 2N1183 2N706A	1 3 1 2	G29M-7 HD5004 CD1598 G29A-74	2 2 5 2	Battery, Mercury, 6V, 225 mAh HP1420-0015	4

VI CONCLUSIONS AND RECOMMENDATIONS

The equipment meets the design specifications more than adequately. The system noise is well below the calibration diode level at all frequencies, and the diode level is at least 10 dB below the lowest atmospheric level yet encountered. The stability is such that calibration needs to be done only once a week. In the absence of system trouble the calibration factors do not change by more than 1 dB in this period.

The presence of an operator would be desirable at all times, but this is seldom practical. The duties of an operator, as distinct from maintenance personnel, are to note and log the incidence of trouble, to check periodically for contamination (man-made interference) and tune away from it if possible, and to adjust (and record) attenuator settings to keep the chart pens on scale. It was originally hoped that the addition of an automatic unit to perform this last function would permit the equipment to be operated for a week at a time without attention, but the high incidence of man-made interference in Southeast Asia has shown this to be impractical. An operator watch was maintained for two months early in 1966, checking each 30 minutes, 24 hours per day. On typical days it was necessary to retune 22% of the time to avoid man-made interference. Even so, approximately 10% of the time was lost, as far as data collection was concerned, including the 3% normally lost during calibration.

Therefore, as a result of analyzing the operations during these periods with respect to the diurnal distribution of required changes in tuning and attenuators, the following schedule has been established. This is considered the minimum amount of attention that will give a reasonable amount of reliable data. (Since this data is statistical, the loss of up to 20% of the data, if such loss is <u>not</u> systematic, is not serious.) The operators should check the equipment at the following times each day: 0600, 0700, 0800, 1100, 1200, 1300, 1400, 1700, 1800,

1900, 2000, 2100, 2200. Checking at these times will catch nearly all of the necessary attenuator changes, but it should be noted that these diurnal changes are not predictable in magnitude or time.

The equipment as now assembled performs quite adequately, but could of course be improved. Probably the most immediately desirable improvement would be the addition of an HF band to the LFA designed to count pulses from about 0.1 volt up. As noted above, it is probably not desirable to design and construct an automatic attenuator for the ARN-3 unless some kind of inverse AFC were also added to automatically tune the receivers to avoid man-made interference. It is doubtful that this much development effort would be justified unless the equipment is to be operated in a location where it is completely impossible to provide operators.

If further equipment of this type is to be constructed, it would be highly desirable to redesign some (at least) of the units to use transistors instead of vacuum tubes; the greatest improvement would result from the use of transistors in the dc amplifiers in the power and voltage strips and in the pen driver amplifiers. The necessary temperature compensation would be somewhat complex, but the reduction of maintenance could more than justify it. Also, redesign of the front-end circuitry (antenna coupler/preamplifier combination) to provide individual channels for each frequency would be an improvement, since under the present arrangement interference in one channel affects all channels.

As a result of field experience with this equipment it is strongly recommended that units similar to U-28, the Line Voltage Range Limiter, be used on field operations in the future where motor generator power sources are used. Virtually all of the catastrophic equipment failures result from periods of severe under or over voltage beyond the range of normal regulation. Such periods of voltage aberration have occurred because of operator error, failure of regulators in the generators, or failure of auxiliary equipment (such as air conditioners) which overloaded the generators.

Appendix A

CALIBRATION THEORY

Appendix A

CALIBRATION THEORY

Calibration of all channels is provided in terms of an effective antenna noise figure, F_a, which is defined as the noise power available from an equivalent lossless antenna relative to kTb, the thermal noise power from a passive resistance. This is from the basic equation $e^2 = 4RkTb$, where

k = Boltzmann's constant = 1.38×10^{-23} joules/degree Kelvin

T = Temperature in degrees Kelvin

b = Effective noise bandwidth in cycles per second.

The actual calibration procedure consists in determining the power level at the antenna by comparison with the noise diode and then in determining the antenna losses. At 5 MHz and below, the antenna is short (i.e., less than $\lambda/8$) relative to the wavelength, and the current can be considered to have a linear distribution along the antenna. When this is true, the mutual and self impedance can be easily calculated. Above 5 MHz, where the antenna current cannot be considered linearly distributed, the impedance calculations become very complex. Fortunately, the antenna losses become very small at these frequencies and can be neglected.

The calibration factors for 5 MHz and below are derived as follows:

With a CW voltage, e_s, applied to the stub antenna, the power, p_a, that would be available from the receiving antenna if it were lossless is given by

$$p_a = \frac{e_a^2}{4r_a} = \frac{e_{sc}^2 m^2}{4r_a z_s^2} \qquad \text{(A-1)}$$

where

e_a = Voltage induced in the receiving antenna

r_a = Radiation resistance of the receiving antenna

z_m = Mutual impedance between antennas

z_s = Self impedance of the stub antenna.

When a CW generator having an open circuit voltage, e_g, is connected through a resistance network to the noise diode load resistance, as shown in Fig. 28, the power available at the dummy antenna networks is given by

$$p_d = \frac{e_g^2}{4 r_g \ell_n} \qquad \text{(A-2)}$$

where

r_g = Generator resistance

ℓ_n = Coefficient of loss in available CW power between generator and diode load resistance caused by resistance network.

The value of p_a can be expressed in terms of p_d by experimentally determining the values of e_s and e_g that will cause the same recorder deflection when the input of the receiver is alternately connected to the antenna and dummy antenna. Under these conditions the voltage ratio, s, can be defined as:

$$s = \frac{e_s}{e_g} \qquad \text{(A-3)}$$

and from Eqs. (A-1), (A-2), and (A-3) we have

$$p_a = \frac{p_d s^2 r_g \ell_n z_m^2}{r_a z_s^2} \quad . \qquad \text{(A-4)}$$

By definition of f_a:

$$f_a = \frac{p_a}{kTb} = \frac{p_d s^2 r_g \ell_n z_m^2}{kTb r_a z_s^2} \quad . \qquad \text{(A-5)}$$

The value of p_d/kTb is obtained by direct calibration of the noise-diode plate-current meter and the value of s is obtained by measurements with the alignment oscillator. The other factors in Eq. (A-5) are calculated from the known system elements and physical dimensions.

From the resistance network in Fig. 28,

$$r_g \ell_n = 50 \times 253 = 1.26 \times 10^4 \quad . \qquad \text{(A-6)}$$

For a short vertical antenna, the radiation resistance is given by

$$r_a = \frac{4}{9} \times 10^{-3} \pi^2 \ell_a^2 f_{MHz}^2 = 1.93 \times 10^{-1} f_{MHz}^2 \qquad \text{(A-7)}$$

where

ℓ_a = Length of the antenna = 6.63 meters

f_{MHz} = Frequency in MHz.

The mutual impedance between the short receiving antenna and the nearby stub antenna is essentially a pure capacitive reactance, and its magnitude is given by

$$z_m = \frac{1430 \ell_s}{f_{MHz} \ell_a} \left[\frac{1}{d} - \frac{1}{\sqrt{\ell_a^2 + d^2}} \right] = \frac{29.5}{f_{MHz}} \qquad \text{(A-8)}$$

where

ℓ_s = Length of stub = 0.203 meter

d = Distance between antenna and stub = 1.22 meters.

The self impedance of the stub is also essentially a pure capacitive reactance, and its magnitude is given by

$$\alpha_s = \frac{\left(\log_{10}\frac{2\ell_s}{a} - 0.403\right) \times 10^4}{1.52\ell_s f_{MHz}} = \frac{6.02 \times 10^4}{f_{MHz}} \qquad \text{(A-9)}$$

where

a = Diameter of the stub = 0.002290 meter.

Combining Eqs. (A-5), (A-6), (A-7), (A-8), and (A-9),

$$f_a = 1.57 \times 10^{-2} \frac{p_d s^2}{kTbf_{MHz}^2} \quad . \qquad \text{(A-10)}$$

Converting to dB we have

$$F_a = F_d + S - 18.04 - 20 \log_{10} f_{MHz} \qquad \text{(A-11)}$$

where

$F_a = 10 \log_{10} f_a$
$F_d = 10 \log_{10} p_d/kTb$
$S = 20 \log_{10} s.$

In this expression, the value of F_d represents the noise diode level that would give the same chart reading R as the actual noise level at the antenna. In practice, however, instead of matching each input level with a corresponding value of F_d, the chart is calibrated with a reference noise diode level, F_d', and the resulting recorder deflection, D, is noted. Thus, the value of F_d that corresponds to the antenna power is given by

$$F_d = R + F_d' - D \quad . \qquad \text{(A-12)}$$

In calibration, the value of F_d' is taken as 36 dB above kTb, and combining this with the constant and the frequency terms of Eq. (A-11) a system constant, K, for the system is given by

$$K = F'_d - 18.04 - 20 \log_{10} f_{MHz}$$

$$= 17.96 - 20 \log_{10} f_{MHz} \quad . \qquad \text{(A-13)}$$

We can now write Eq. (A-11) as

$$F_a = R + K + S - D \quad . \qquad \text{(A-14)}$$

Values of K for the frequencies used here are as follows:

Frequency	K (System Constant)
6 kHz	62.4
13 kHz	55.7
27 kHz	49.3
160 kHz	33.9
530 kHz	23.5
2.3 MHz	10.7
5 MHz	4.0
10 MHz	-9.6

Since the antenna can be considered lossless at 10 MHz, the value of F_a is equal to F_d, provided the dummy antenna impedance is equal to the antenna impedance. Correct adjustment of the dummy impedance is made initially, but in order to correct for changes during shipment or with time, measurements with the stub antenna are also made at this frequency.

The mutual impedance equations used previously are not valid at 10 MHz and, thus, the value of K must be determined empirically by measuring S with a correctly adjusted dummy antenna and equating Eqs. (A-12) and (A-14) so that

$$K = 36 - S \quad . \qquad \text{(A-15)}$$

The value of K thus determined can then be used in Eq. (A-14) as a calibration constant, and is also given above.

Appendix B

COMB FILTER ALIGNMENT

Appendix B

COMB FILTER ALIGNMENT

This alignment should rarely be required, and should be performed only by qualified personnel. A Boonton Model 250A RX meter is required, and the procedure is as follows. Connect the filter input to the antenna isolator, which must have power on and its input isolated (turning the Calibration Unit function switch to any position except ANT does this). Set the RX meter to the required frequency, short its input and maximize the detector response, remove the short and null input connector capacity, and connect to filter output cable (use cable which normally connects to preamplifier) through the special low-capacity adapter provided. This makes the capacity of the connecting cable part of the filter. Set the Calibration Unit function switch to the frequency nearest the one being tuned to. Tune for resonance at the proper frequency and for correct output impedance at resonance, as shown in Table B-1. (See Fig. B-1 for L and C physical locations.)

Table B-1

EFFECT OF VARYING FILTER ELEMENTS

Frequency	Required R	Increasing Component	Effect on Tuned Frequency	Effect on Output R
530 kHz	3000	L1	Decrease	Increase
		L4	Decrease	Decrease
		CA	Decrease	Decrease
2.3 MHz	1000	C1	Decrease	Decrease
		C5	Decrease	Increase
5 MHz	1000	C2	Decrease	Decrease
		C6	Decrease	Increase
10 MHz	1000	C3	Decrease	Decrease
		C7	Decrease	Increase

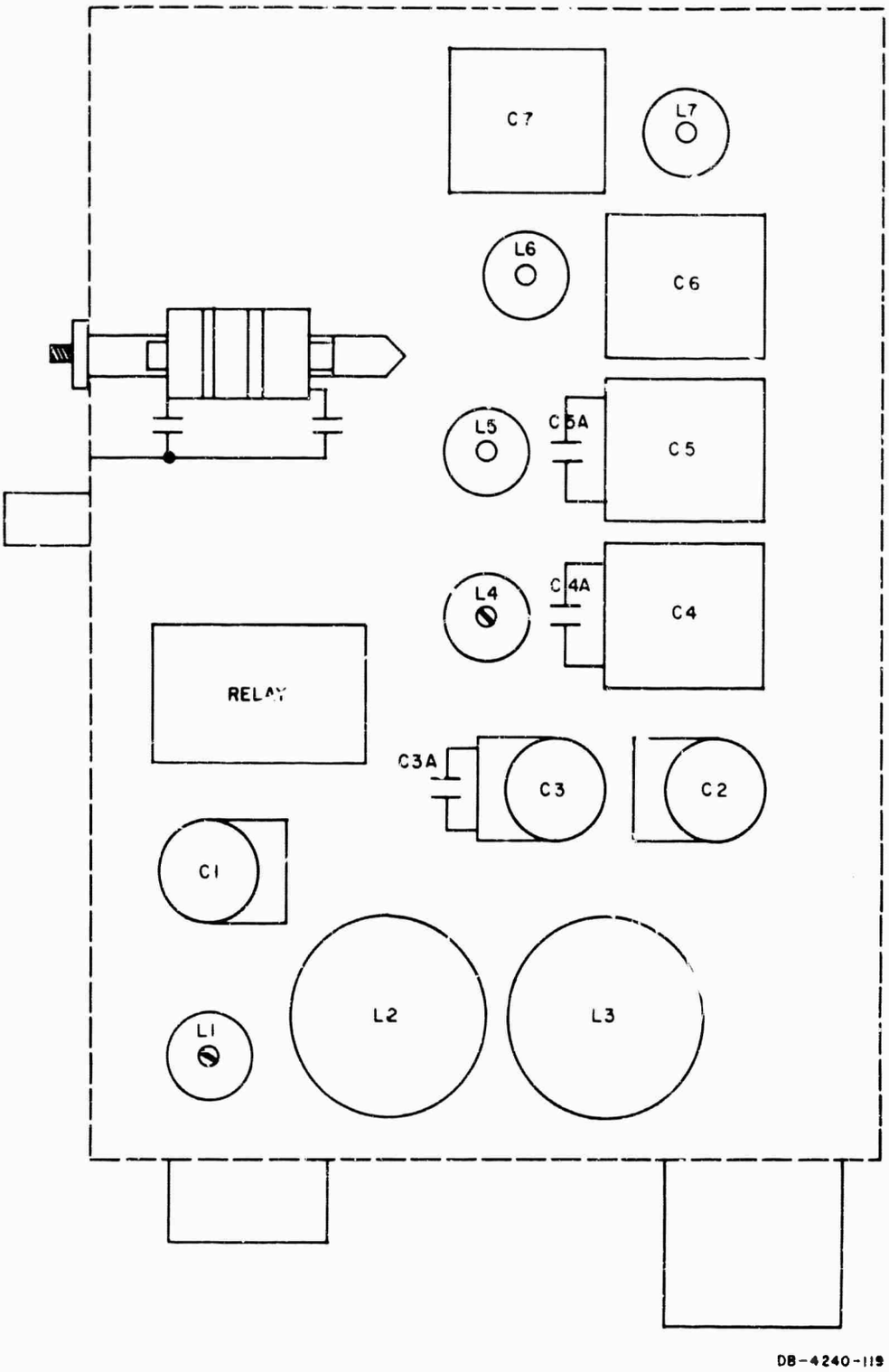

FIG. B-1 COMB FILTER LAYOUT

There is some slight interaction between filter elements, so after tuning each of the four frequencies (starting with the lowest) it is wise to go through again and touch up as indicated. It is not difficult to set the output resistances within ±5%, although it is doubtful that any good purpose is served by getting closer than ±10%.

Appendix C

PORTABLE EQUIPMENT INSTALLATION

Appendix C

PORTABLE EQUIPMENT INSTALLATION

The second installation is in a type S-141 Van and is considered portable. This van is transported on a 2-1/2-ton truck. The portability is somewhat limited, since the standard ground plane and antenna are frequently used, and since generators and fuel must accompany it. Figure C-1 shows the equipment layout, and Figs. C-2, C-3, and C-4 show the power and signal interconnections.

Note that the Low Frequency Converters carry the designation U-30 instead of U-1 (as in the fixed installation) and the power supplies for the converters are designated U-31 instead of U-20. This change in designation reflects only a different physical arrangement, not a difference in principle. Schematics for these units are Figs. C-5 and C-6.

Aside from these small differences, the equipments are the same, and all of the preceding manual applies to both.

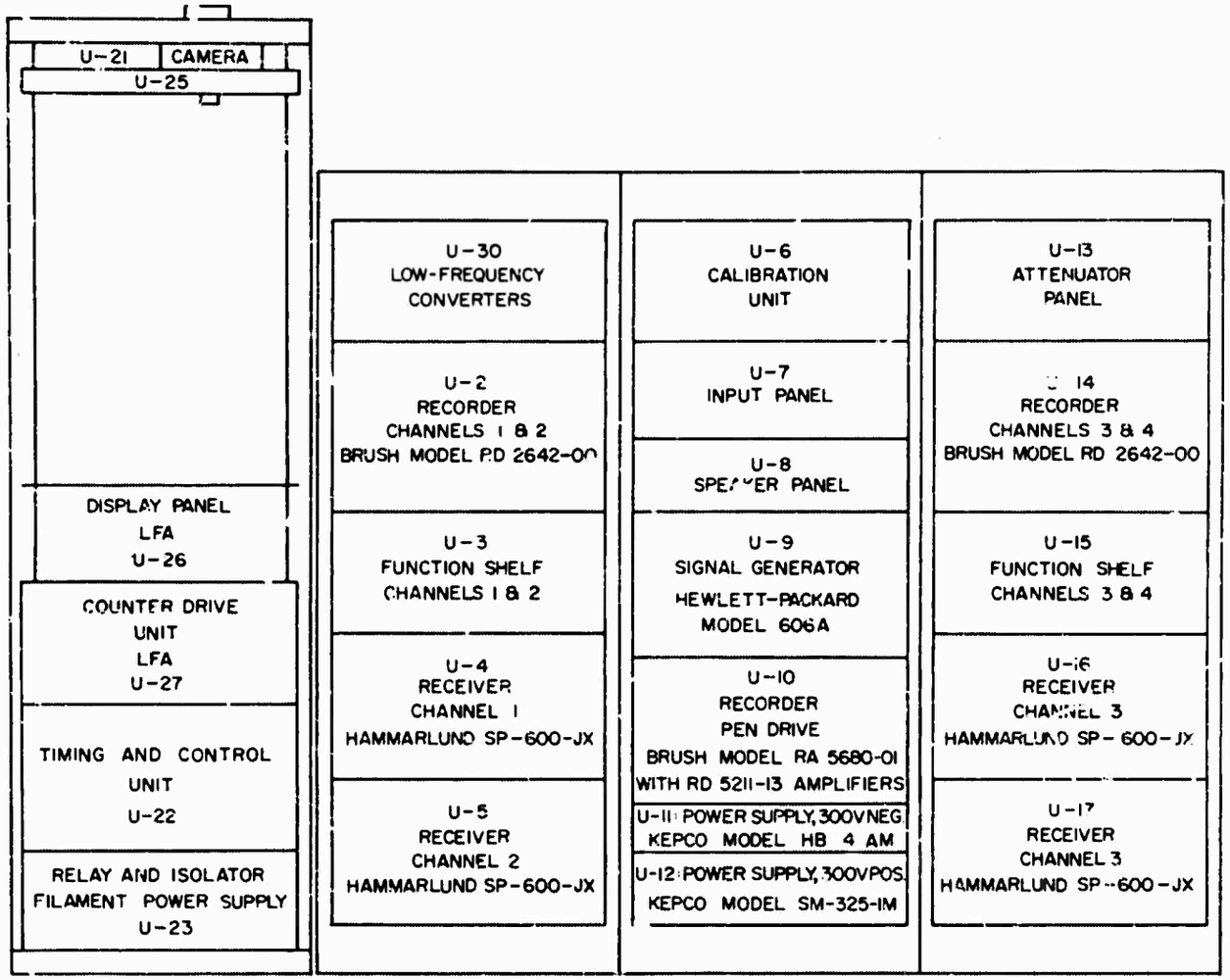

PORTABLE ARN-3 AND LFA INSTALLATION. LINE REGULATOR, U-18, POWER SUPPLY FOR RECORDER PEN DRIVER AMPLIFIERS, U-19, AND POWER SUPPLY FOR LOW-FREQUENCY CONVERTERS, U-31, ARE BEHIND RACKS. LINE-VOLTAGE RANGE LIMITER, U-28, AND LF CALIBRATION INSTRUMENTATION, U-29, NOT SHOWN. SCALE: $\frac{1}{4}$" = 1$\frac{3}{4}$"

DB-4240-93

FIG. C-1 EQUIPMENT LAYOUT, PORTABLE

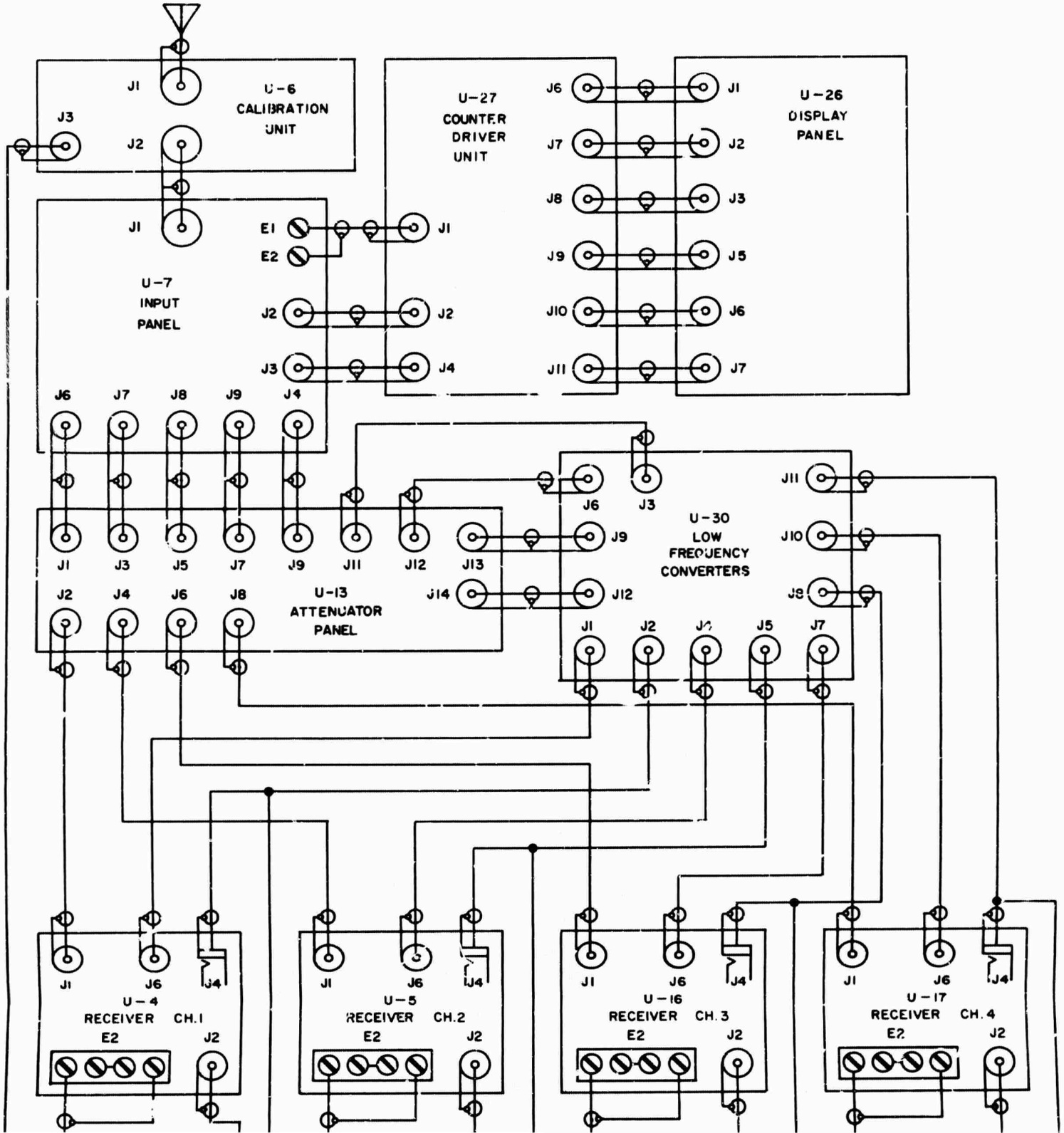
U-6
CALIBRATION
UNIT
J1
J2
J3
U-27
COUNTER
DRIVER
UNIT
U-26
DISPLAY
PANEL
U-7
INPUT
PANEL
E1
E2
U-13
ATTENUATOR
PANEL
U-30
LOW
FREQUENCY
CONVERTERS
U-4
RECEIVER CH.1
U-5
RECEIVER CH.2
U-16
RECEIVER CH.3
U-17
RECEIVER CH.4

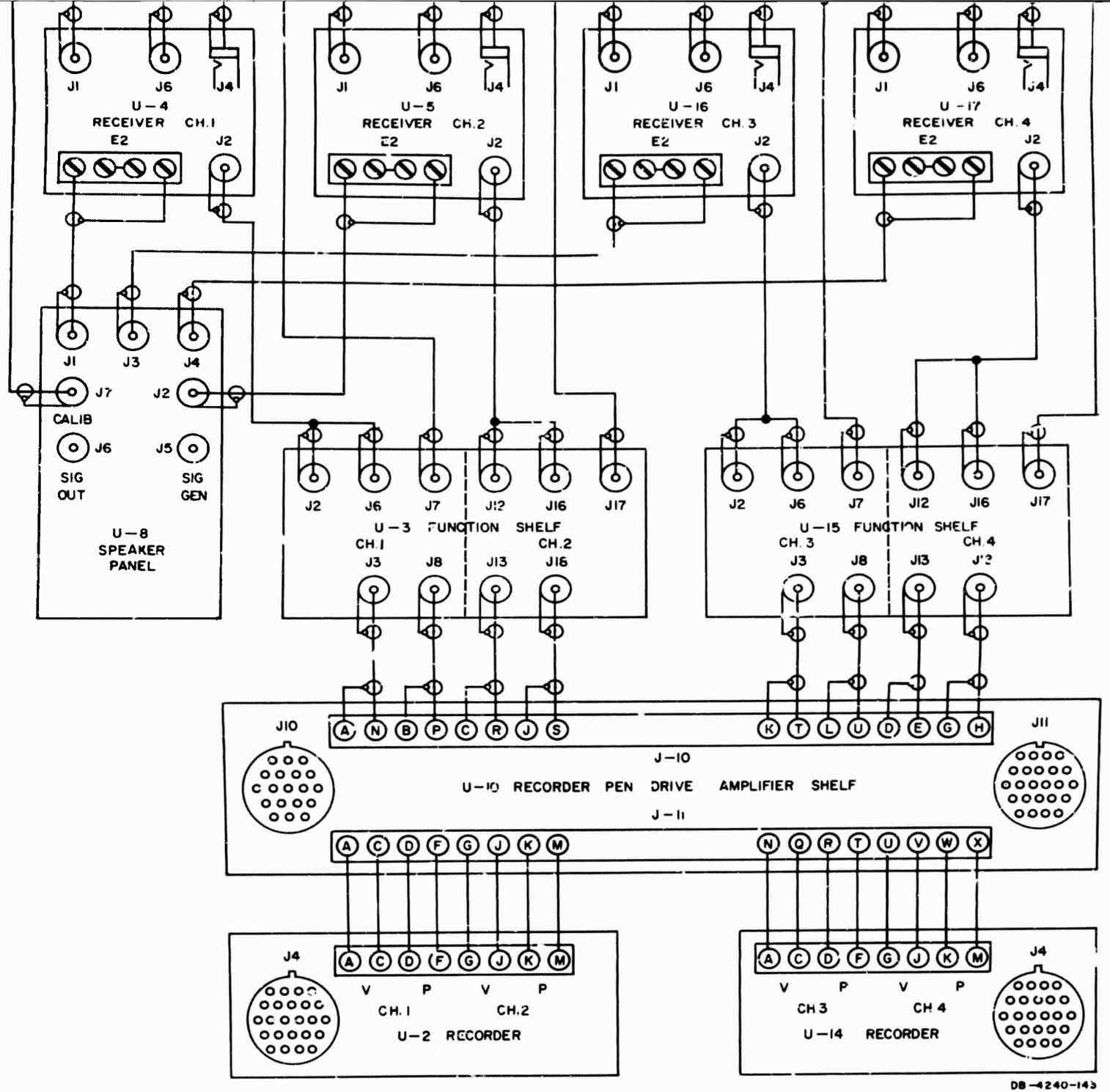

FIG. C-2 SIGNAL INTERCONNECTIONS, PORTABLE

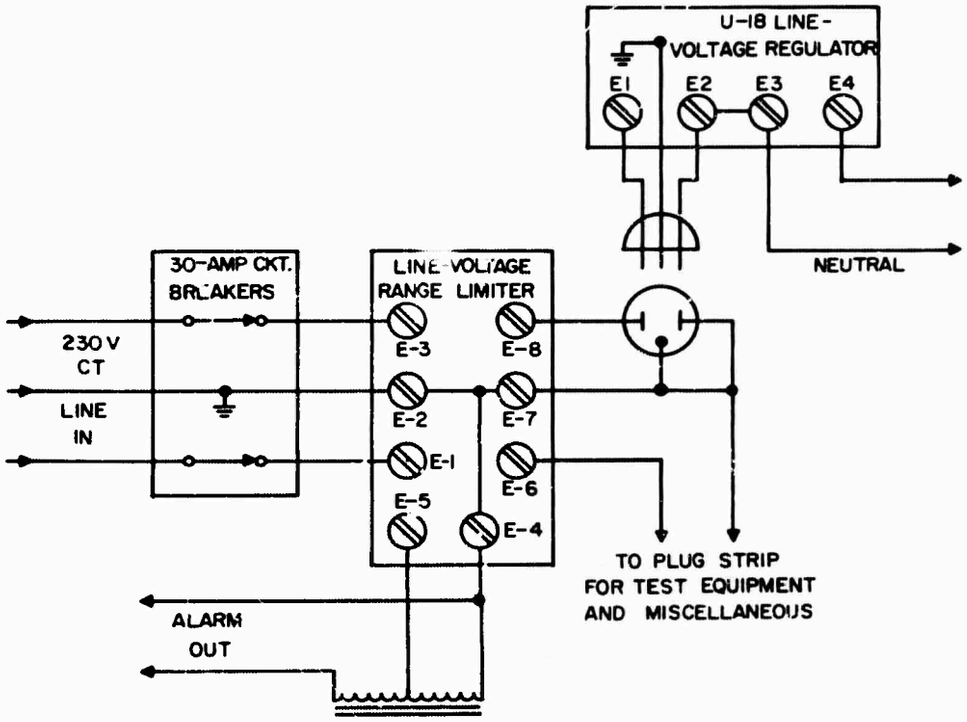

TO PLUG STRIPS POWERING UNITS AS FOLLOWS:

U-2 (P1)	U-16 (P1)
U-4 (P1)	U-17 (P1)
U-5 (P1)	U-19 (TB1, TERM. 1 & 3)
U-6 (P2)	U-22 (P1)
U-9 (LINE PLUG)	U-23 (P1)
U-11 (LINE PLUG)	U-27 (P2)
U-12 (LINE PLUG)	U-29 (P1)
U-14 (P1)	U-31 (P1)

DB-1240-92

FIG. C-3 PRIMARY POWER DISTRIBUTION, PORTABLE

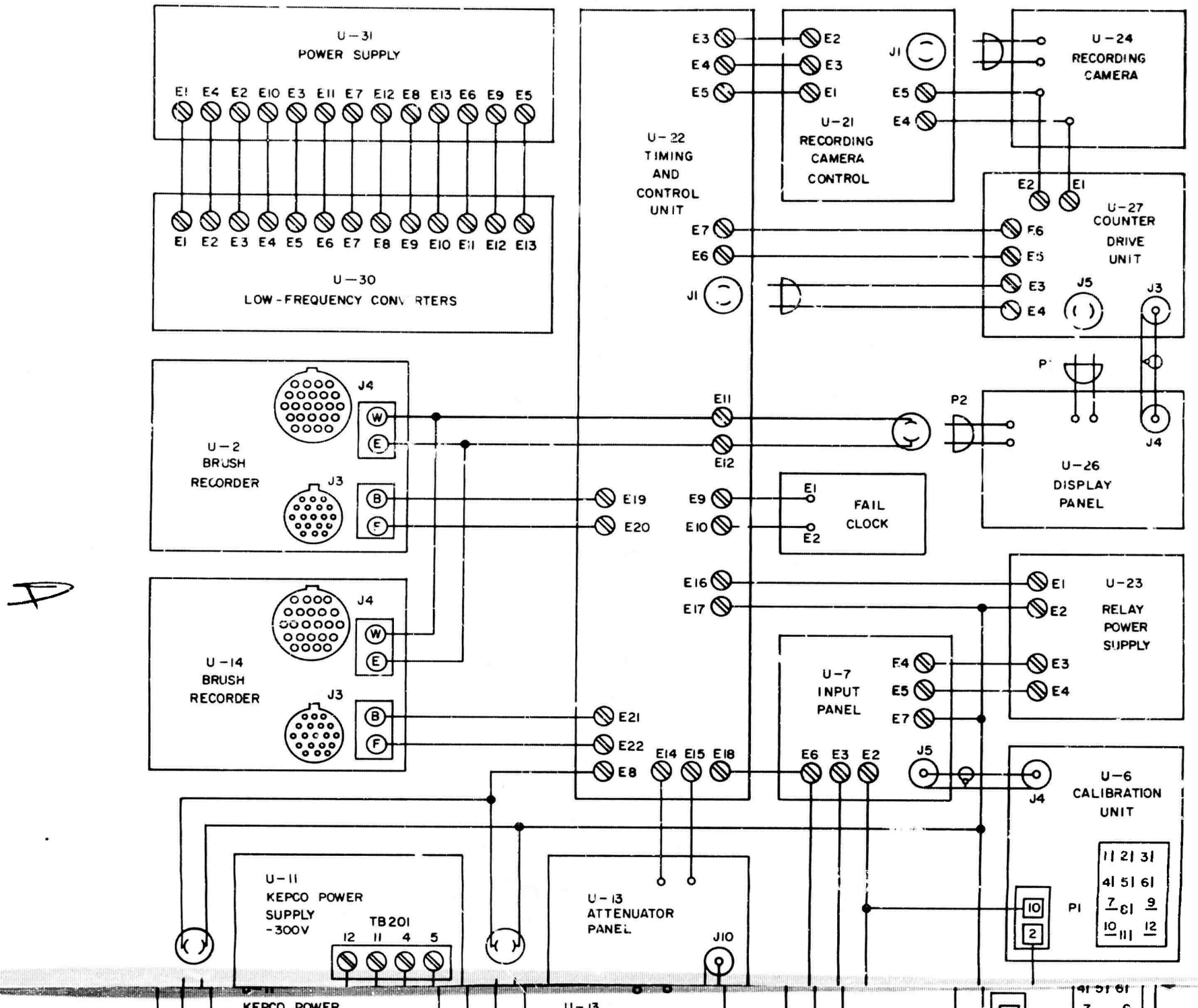
U-31
POWER SUPPLY
E1 E4 E2 E10 E3 E11 E7 E12 E8 E13 E6 E9 E5
E1 E2 E3 E4 E5 E6 E7 E8 E9 E10 E11 E12 E13
U-30
LOW-FREQUENCY CONVERTERS
U-22
TIMING
AND
CONTROL
UNIT
E3
E4
E5
E2
E3
E1
J1
U-21
RECORDING
CAMERA
CONTROL
U-24
RECORDING
CAMERA
E5
E4
E7
E6
J1
E2
E1
U-27
COUNTER
DRIVE
UNIT
E6
E5
E3
E4
J5
J3
P1
P2
J4
U-26
DISPLAY
PANEL
J4
U-2
BRUSH
RECORDER
J3
W
E
B
F
E11
E12
E19
E20
E9
E10
E1
E2
FAIL
CLOCK
U-14
BRUSH
RECORDER
E16
E17
E1
E2
U-23
RELAY
POWER
SUPPLY
E3
E4
U-7
INPUT
PANEL
E4
E5
E7
E21
E22
E8
E14 E15 E18
E6 E3 E2
J5
J4
U-6
CALIBRATION
UNIT
11 21 31
41 51 61
7 81 9
10 111 12
P1
10
2
U-11
KEPCO POWER
SUPPLY
-300V
TB201
12 11 4 5
U-13
ATTENUATOR
PANEL
J10

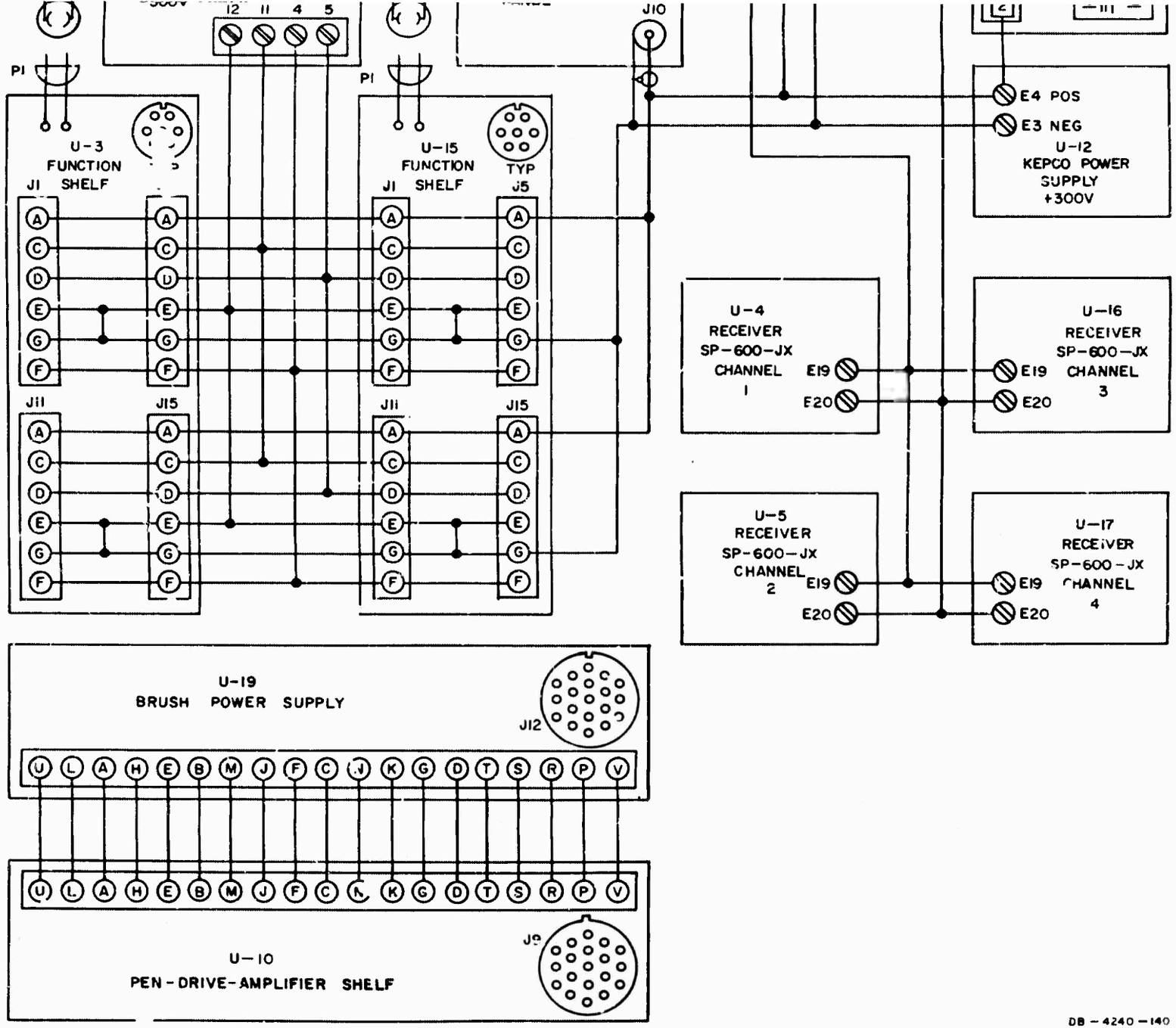

FIG. C-4 CONTROL AND SECONDARY POWER INTERCONNECTIONS, PORTABLE

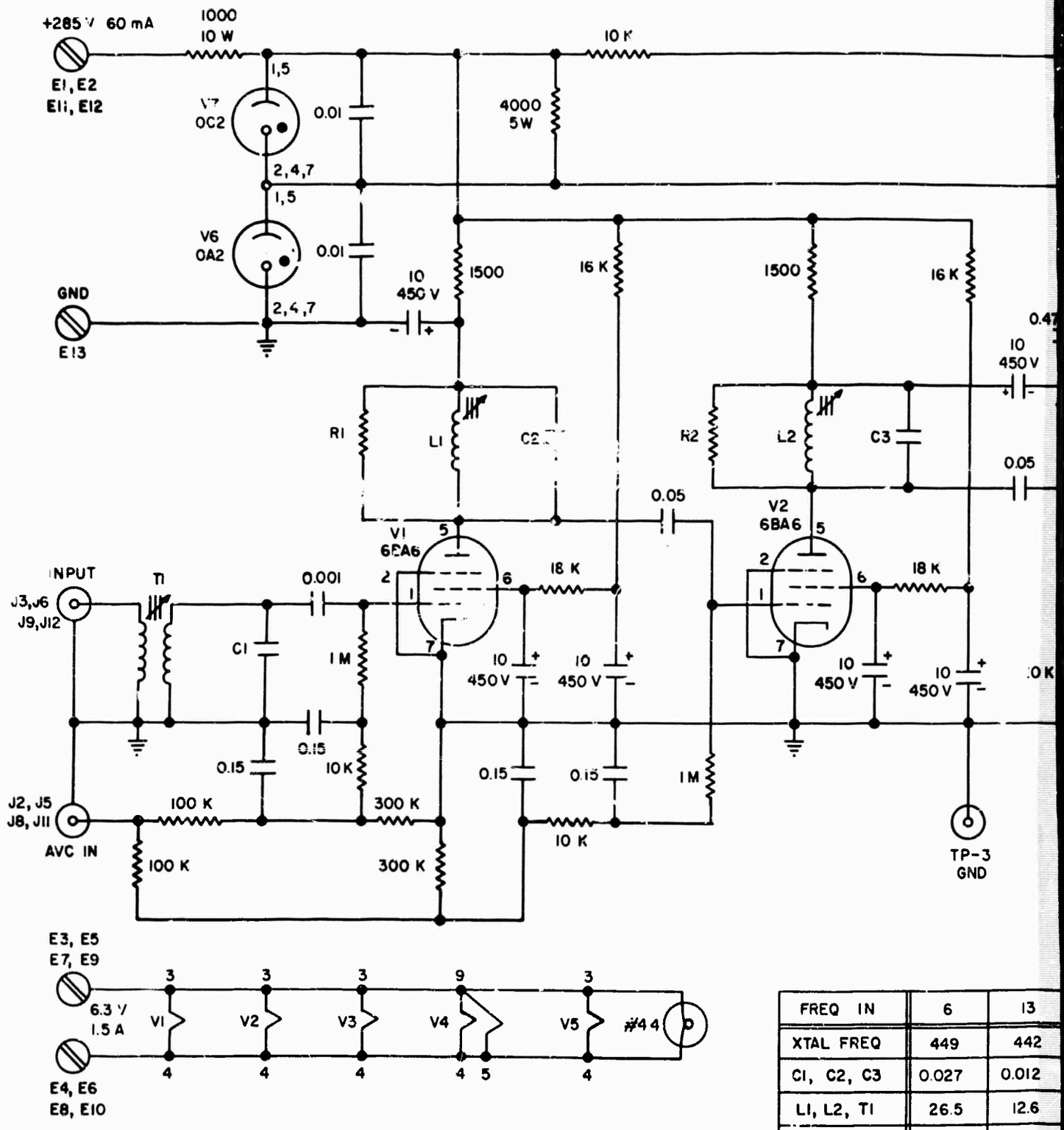

FREQ IN	6	13
XTAL FREQ	449	442
C1, C2, C3	0.027	0.012
L1, L2, T1	26.5	12.6
L3	1	1
C4	124	128
R1, R2	SELECT FOR 200	

NOTE VALUES OF ALL CAPACITORS IN MICROFARADS UNLESS OTHERWISE INDICATED.

A

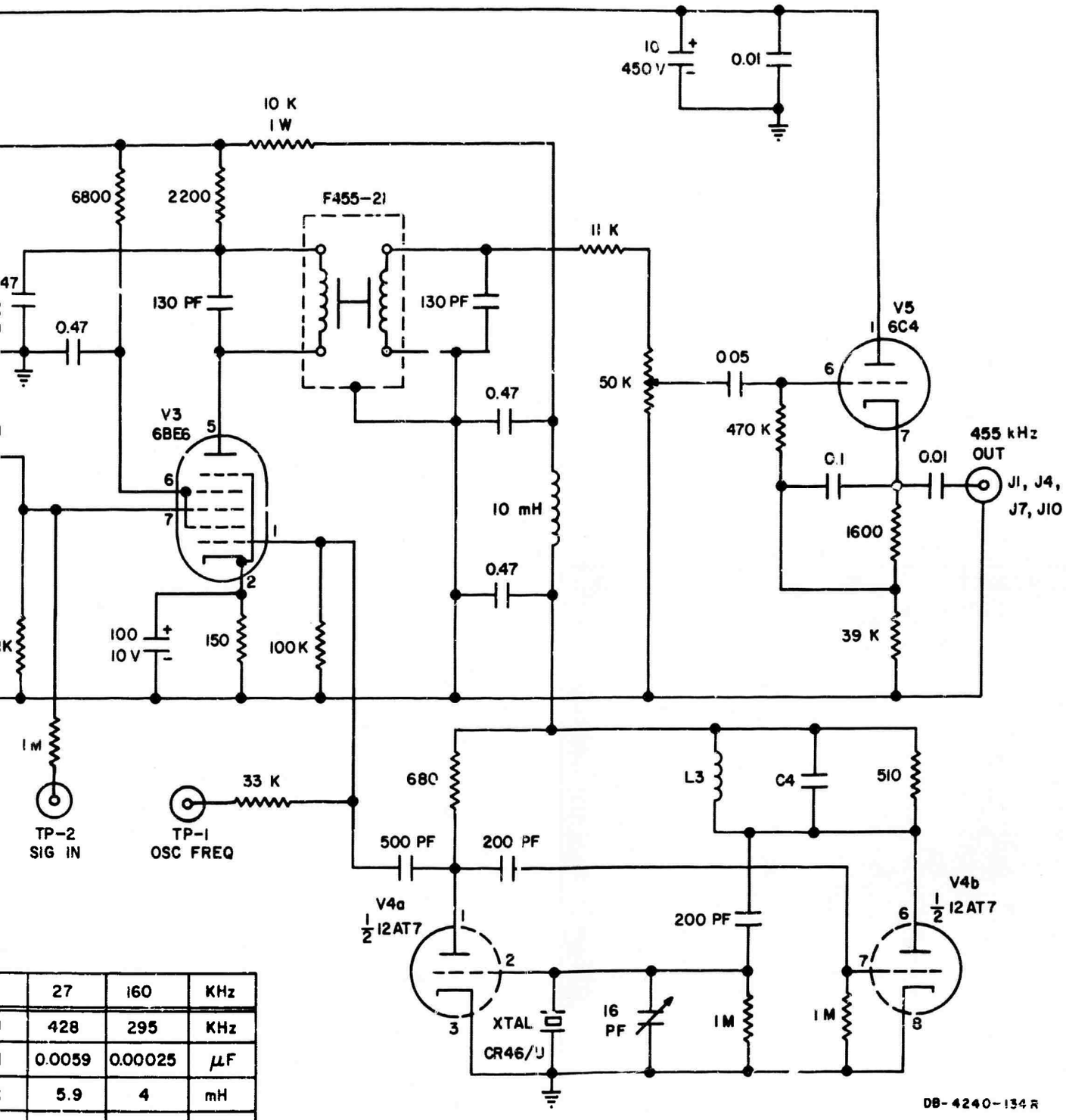

	27	160	KHz
	428	295	KHz
	0.0059	0.00025	μF
	5.9	4	mH
	1	2	mH
	138	146	PF
00 Hz BANDWIDTH AT – 1 DB			

FIG. C-5
LF CONVERTERS, ARN-3, PORTABLE, U-30

B

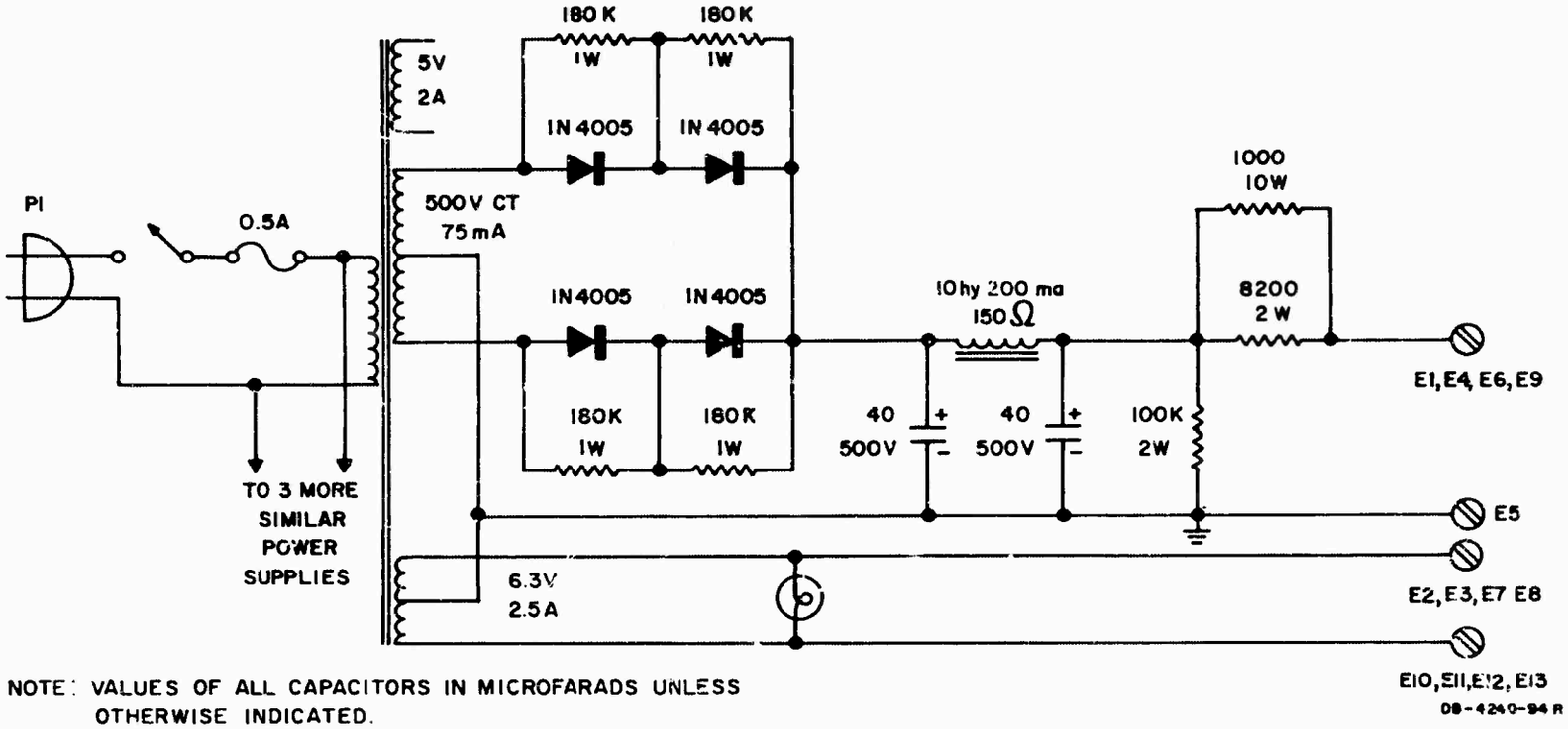

NOTE: VALUES OF ALL CAPACITORS IN MICROFARADS UNLESS OTHERWISE INDICATED.

FIG. C-6 POWER SUPPLIES FOR LF CONVERTERS, PORTABLE, U-31

REFERENCES

The literature concerning atmospheric radio noise and lightning flash measurements is huge. A bibliography which even pretended to completeness would be much larger than this report. The following is a sampling, mostly from more recent work.

1. P. H. Enslow, "Noise Figures, Noise Temperatures, and System Sensitivity," Technical Report No. 516-2, Contract DA 36(039) SC-78296, Stanford Electronics Laboratories, Stanford University, California (10 July 1961).

2. J. A. Saxton, "Advances in Radio Research" (Academic Press, Inc., London, 1964).

3. H. A. Thomas, "A Subjective Method of Measuring Radio Noise," Proc. Instn. Elect. Engrs., Vol. 97, Part III, pp. 329-334 (1950).

4. W. Q. Critchlow, G. Foldes, F. J. Hewitt, and F. Horner, "Special Report on Characteristics of Terrestrial Radio Noise," Subcommittee of Commission IV, URSI (August 1960).

5. W. B. Davenport and W. L. Root, "An Introduction to the Theory of Random Signals and Noise" (McGraw-Hill Book Company, Inc., New York, New York, 1958).

6. W. Q. Crichlow, "Noise Investigations at VLF by the National Bureau of Standards," Proc. IRE, pp. 778-782 (June 1957).

7. W. H. Ahlbeck et al,, "Instruction Book for ARN-2 Radio Noise Recorder, Serial Nos. 1-10," NBS Report 5545, National Bureau of Standards, Boulder, Colorado (3 January 1958).

8. W. Q. Crichlow, R. T. Disney, and M. A. Jenkins, "Quarterly Radio Noise Data," NBS Technical Notes Nos. 18-12 through 18-27 (1961 through 1965).

9. "Revision of Atmospheric Radio Noise Data," CCIR Report No. 65, International Telecommunication Union, Geneva (1957).

10. "World Distribution and Characteristics of Atmospheric Radio Noise," CCIR Report 322, Doc. X, Plenary Assembly, Geneva, 1963 (Int. Tele. Union, Geneva, 1964).

11. C. Clarke, P. A. Bradley, and D. E. Mortimer, "Some Characteristics of Atmospheric Radio Noise Observed at Singapore and Their Comparison with Temperate Latitude Data," Department of Scientific and Industrial Research, Radio Research Station (1963).

12. C. Clarke, P. A. Bradley, and D. E. Mortimer, "Characteristics of Atmospheric Radio Noise Observed at Singapore," Proc. IEE, Vol. 112, No. 5, pp. 849-860 (May 1965).

13. C. Clarke, "Atmospheric Noise Structure: Measuring Equipment for 15 kc/s - 2 Mc/s," Electronic Technology, pp. 197-203 (May 1930).

14. H. E. Dinger and H. G. Paine, "Factors Affecting the Accuracy of Radio Noise Meters," Proc. IRE, pp. 75-81 (January 1947).

15. F. Horner and J. Harwood, "An Investigation of Atmospheric Radio Noise at Very Low Frequencies," Proc. Instn. Elect. Engrs., Vol. 103B, pp. 743-751 (November 1956).

16. "Lightning Flash Counter," The British Electrical and Allied Industries Research Association, England (19 May 1958).

17. F. Horner, "The Design and Use of Instruments for Counting Local Lightning Flashes," Proc. IRE, Vol. 107, Part B, No. 34, pp. 321-330 (July 1960).

18. H. D. Muller-Hildebrand, "Lightning Counters: I. The Change in Electric Field due to Lightning Strokes, with Reference to Its Effect on Lightning Counters," Ark. Geophys., Vol. 4, pp. 247-269 (1963).

19. H. D. Muller-Hildebrand, "Lightning Counters: II. The Effect of Changes of Electric Field on Counter Circuits," Ark. Geophys., Vol. 4, pp. 271-291 (1963).

20. H. D. Muller-Hildebrand, "Lightning Flash Counters," CIGRE Study Committee No. 8.

21. T. Obayashi, "Measured Frequency Spectra of Very-Low-Frequency Atmospherics," J. Research NBSD Radio Propagation, Vol. 64 D., No. 1, pp. 41-48 (1960).

22. E. T. Pierce, H. R. Arnold, and A. S. Dennis, "Very-Low-Frequency Atmospherics due to Lightning Flashes," Final Report, SRI Project 3738, Contract AF 33(657)-7009, Stanford Research Institute, Menlo Park, California (September 1962).

23. E. T. Pierce, "The Influence of Individual Variations in the Field Change due to Lightning Discharges Upon the Design and Performance of Lightning Flash Counter," Arch. Met. Geophysik and Bioklimatologie, Vol. 9, pp. 78-86 (1956).

24. W. Q. Crichlow, C. J. Roubique, A. D. Spaulding, and W. M. Beery, "Determination of the Amplitude-Probability Distribution of Atmospheric Radio Noise from Statistical Moments," J. Research NBS, Vol. 64 D, No. 1, pp. 49-55 (January-February 1960).

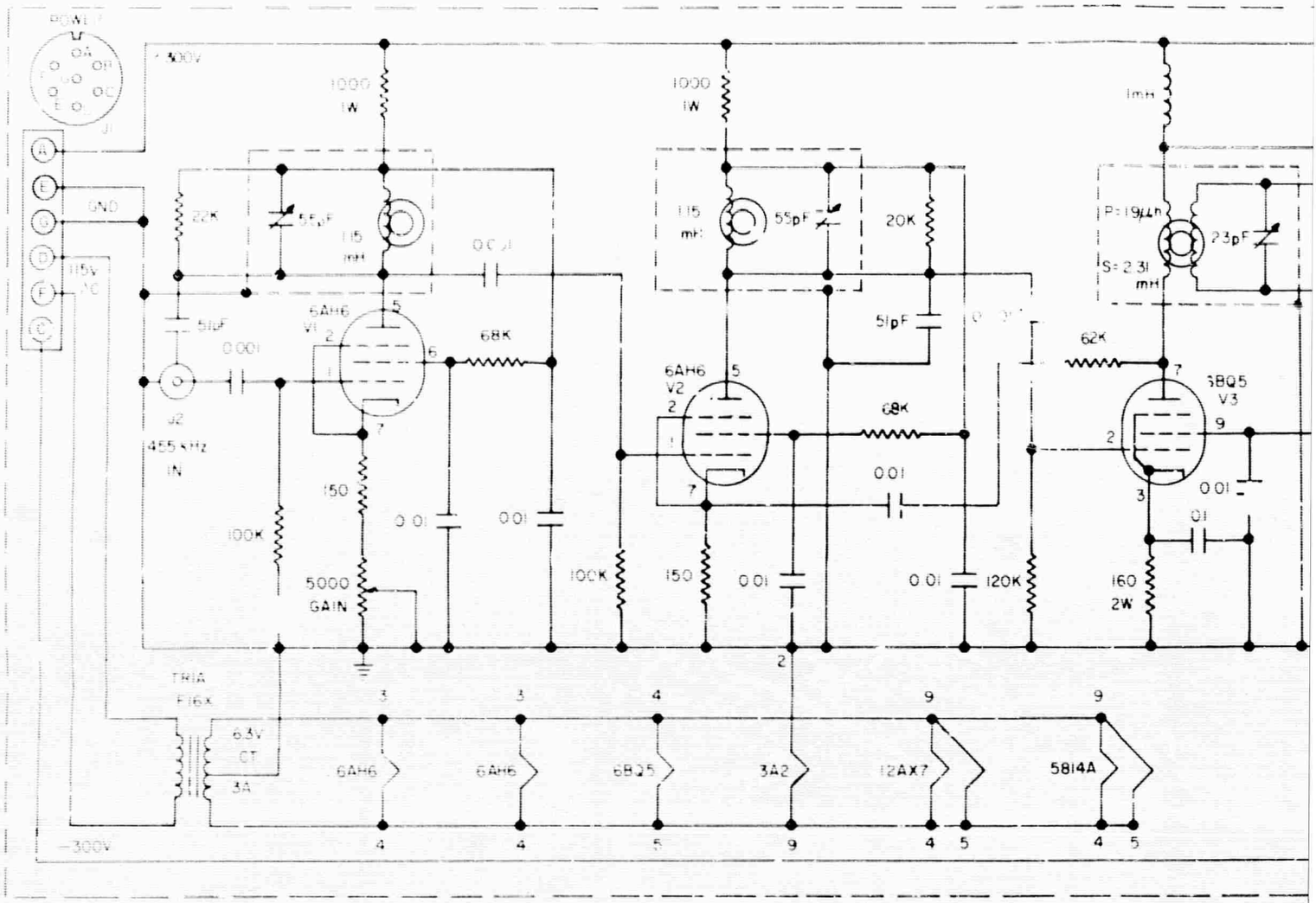
POWER
J1
+300V
GND
115V AC
1000 1W
22K
55pF
1.15 mH
0.001
51pF
6AH6 V1
0.001
J2
455 kHz IN
68K
150
100K
0.01
5000 GAIN
1000 1W
1.15 mH
55pF
20K
51pF
6AH6 V2
68K
0.01
100K
150
0.01
0.01
120K
1mH
P=19μh
S=2.31 mH
23pF
62K
6BQ5 V3
0.01
.01
160 2W
TRIA F16X
6.3V CT
3A
6AH6
6AH6
6BQ5
3A2
12AX7
5814A
-300V

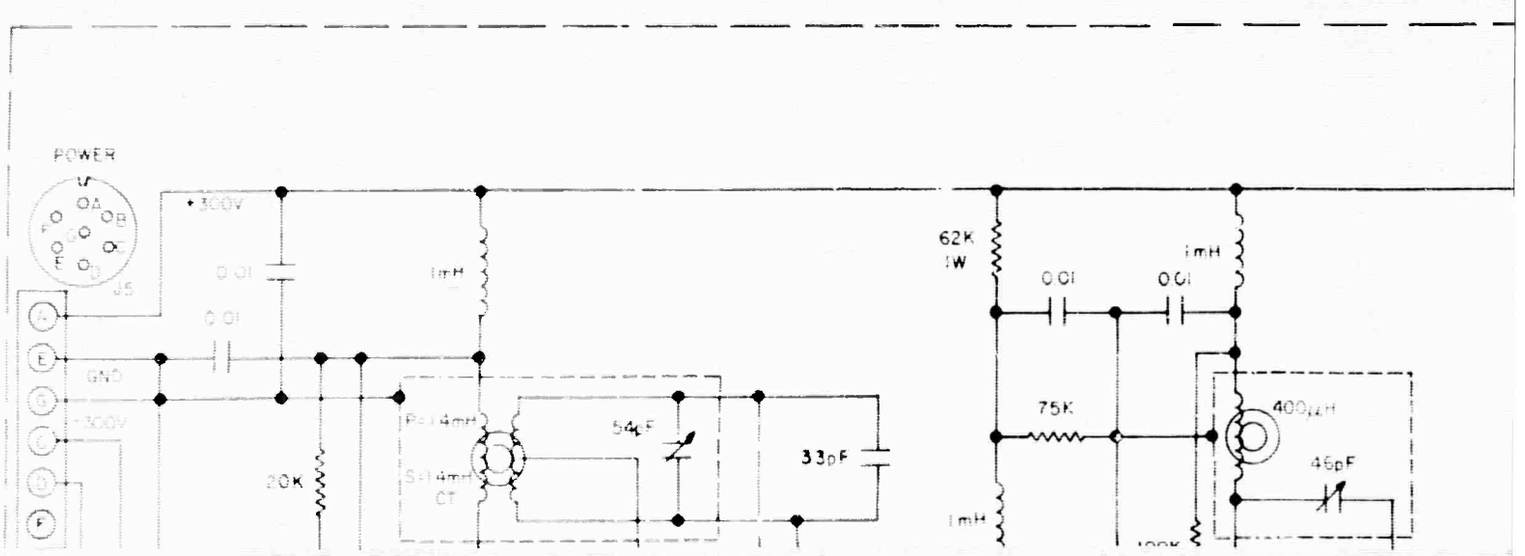
POWER
J5
+300V
GND
-300V
0.01
0.01
1mH
20K
P=1.4mH
S=1.4mH CT
54pF
33pF
62K 1W
0.01
0.01
1mH
75K
400μH
46pF
1mH

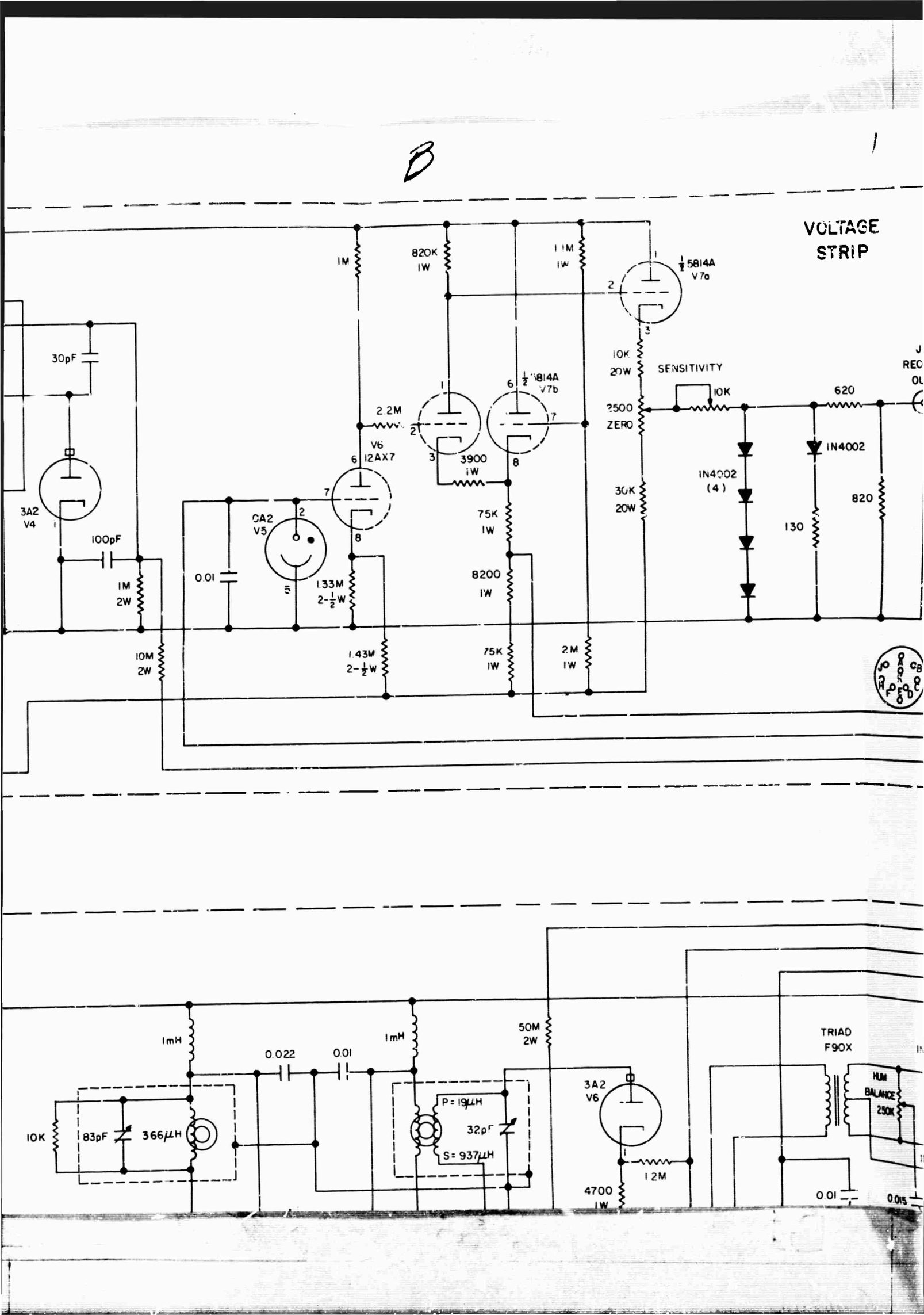
VOLTAGE STRIP
1M
820K 1W
1.1M 1W
½ 5814A V7a
30pF
10K 20W
SENSITIVITY
10K
620
2500 ZERO
2.2M
V6 12AX7
½ 5814A V7b
3900 1W
IN4002
IN4002 (4)
30K 20W
820
3A2 V4
100pF
CA2 V5
75K 1W
130
0.01
1M 2W
1.33M 2-½W
8200 1W
10M 2W
1.43M 2-½W
75K 1W
2M 1W
1mH
0.022
0.01
1mH
50M 2W
TRIAD F90X
10K
83pF
366μH
P=19μH
32pF
S=937μH
3A2 V6
HUM BALANCE 250K
1.2M
4700 1W
0.01
0.015

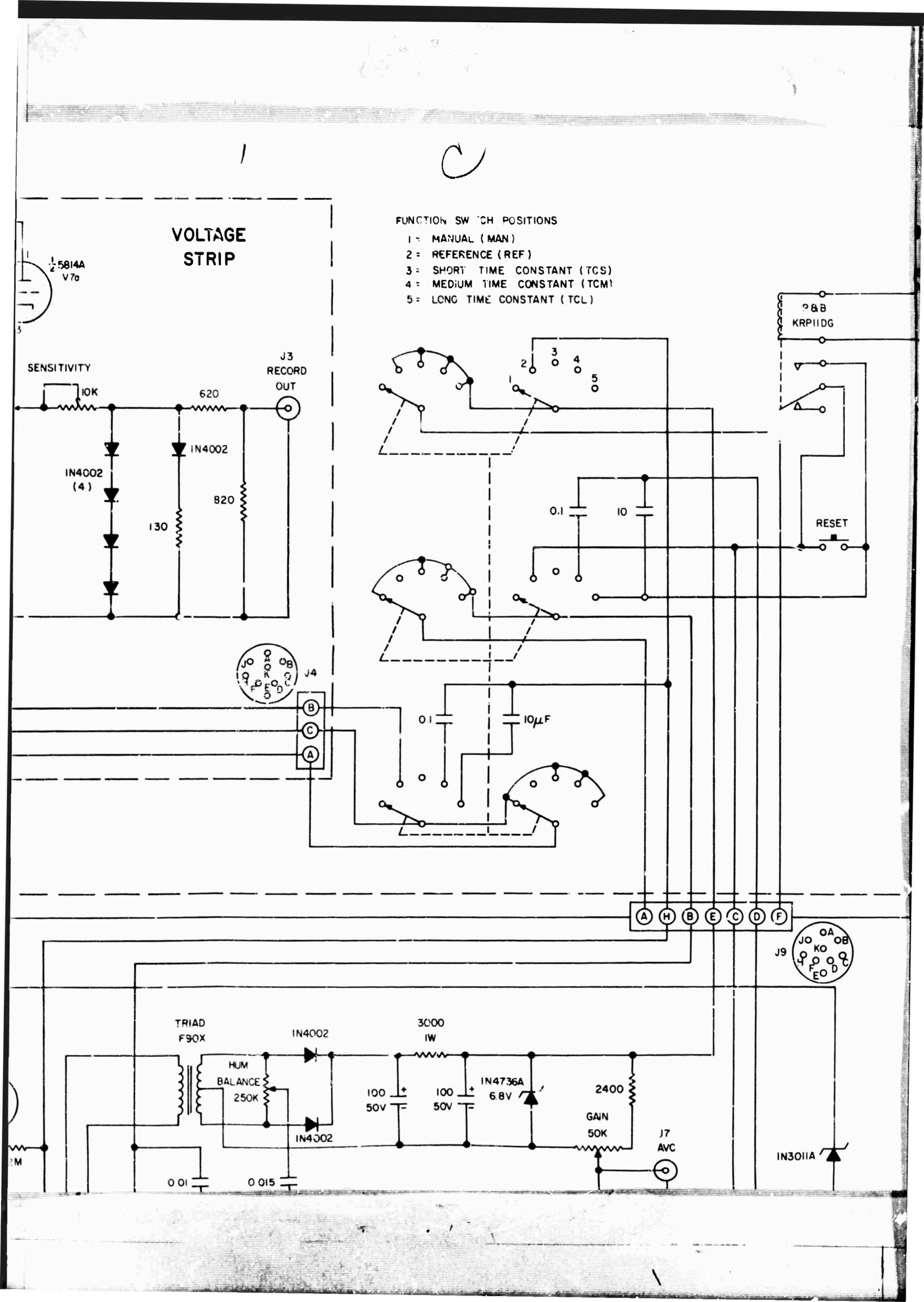
VOLTAGE
STRIP
FUNCTION SWITCH POSITIONS
1 = MANUAL (MAN)
2 = REFERENCE (REF)
3 = SHORT TIME CONSTANT (TCS)
4 = MEDIUM TIME CONSTANT (TCM)
5 = LONG TIME CONSTANT (TCL)
½ 5814A
V7a
SENSITIVITY
10K
620
J3
RECORD
OUT
IN4002
(4)
IN4002
820
130
P&B
KRP11DG
0.1
10
RESET
J4
0.1
10μF
A
H
B
E
C
D
F
J9
TRIAD
F90X
IN4002
3000
1W
HUM
BALANCE
250K
100
50V
100
50V
IN4736A
6.8V
2400
GAIN
50K
J7
AVC
IN4002
0.01
0.015
IN3011A
2M

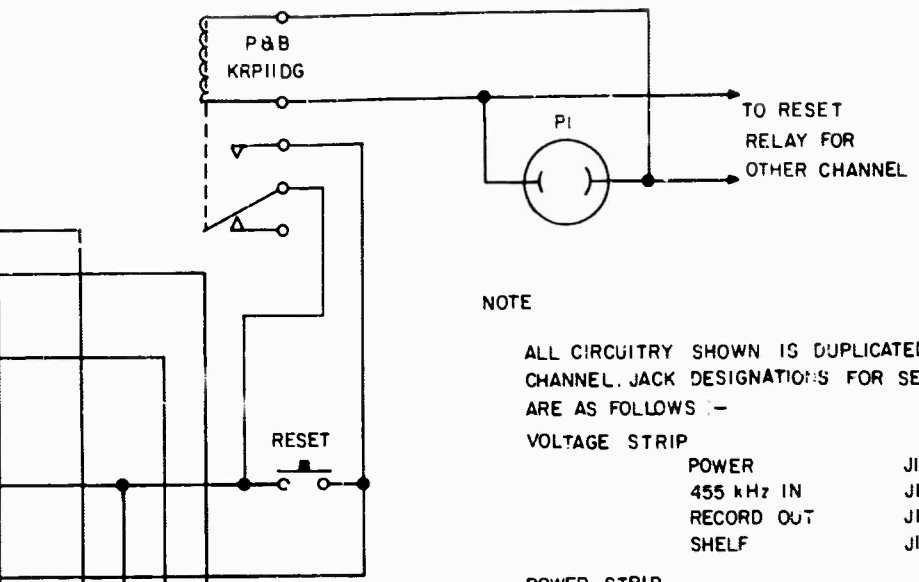

NOTE

ALL CIRCUITRY SHOWN IS DUPLICATED FOR OTHER CHANNEL. JACK DESIGNATIONS FOR SECOND CHANNEL ARE AS FOLLOWS :-

VOLTAGE STRIP

POWER	J11
455 kHz IN	J12
RECORD OUT	J13
SHELF	J14

POWER STRIP

POWER	J15
455 kHz IN	J16
AVC	J17
RECORD OUT	J18
SHELF	J19

VALUES OF ALL CAPACITORS IN MICROFARADS UNLESS OTHERWISE INDICATED.

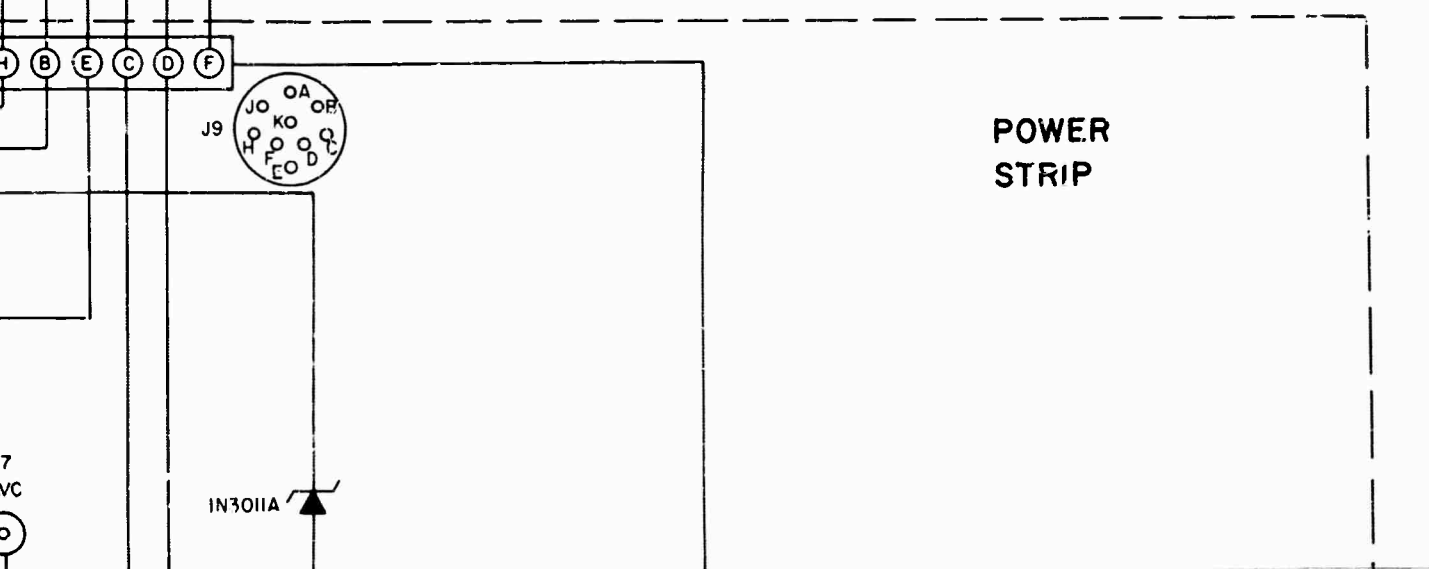

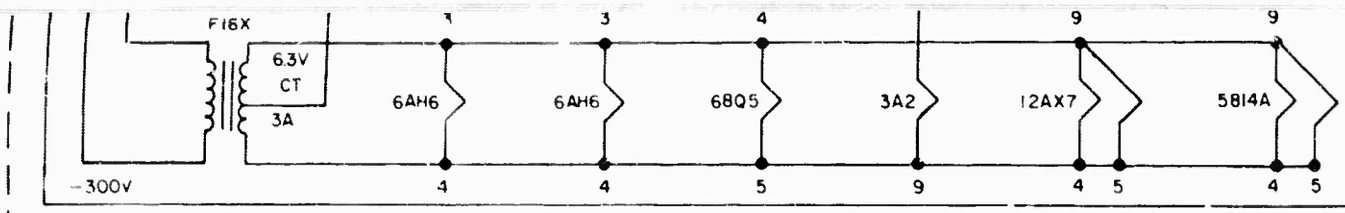
F16X
6.3V
CT
3A
6AH6
6AH6
68Q5
3A2
12AX7
5814A
-300V

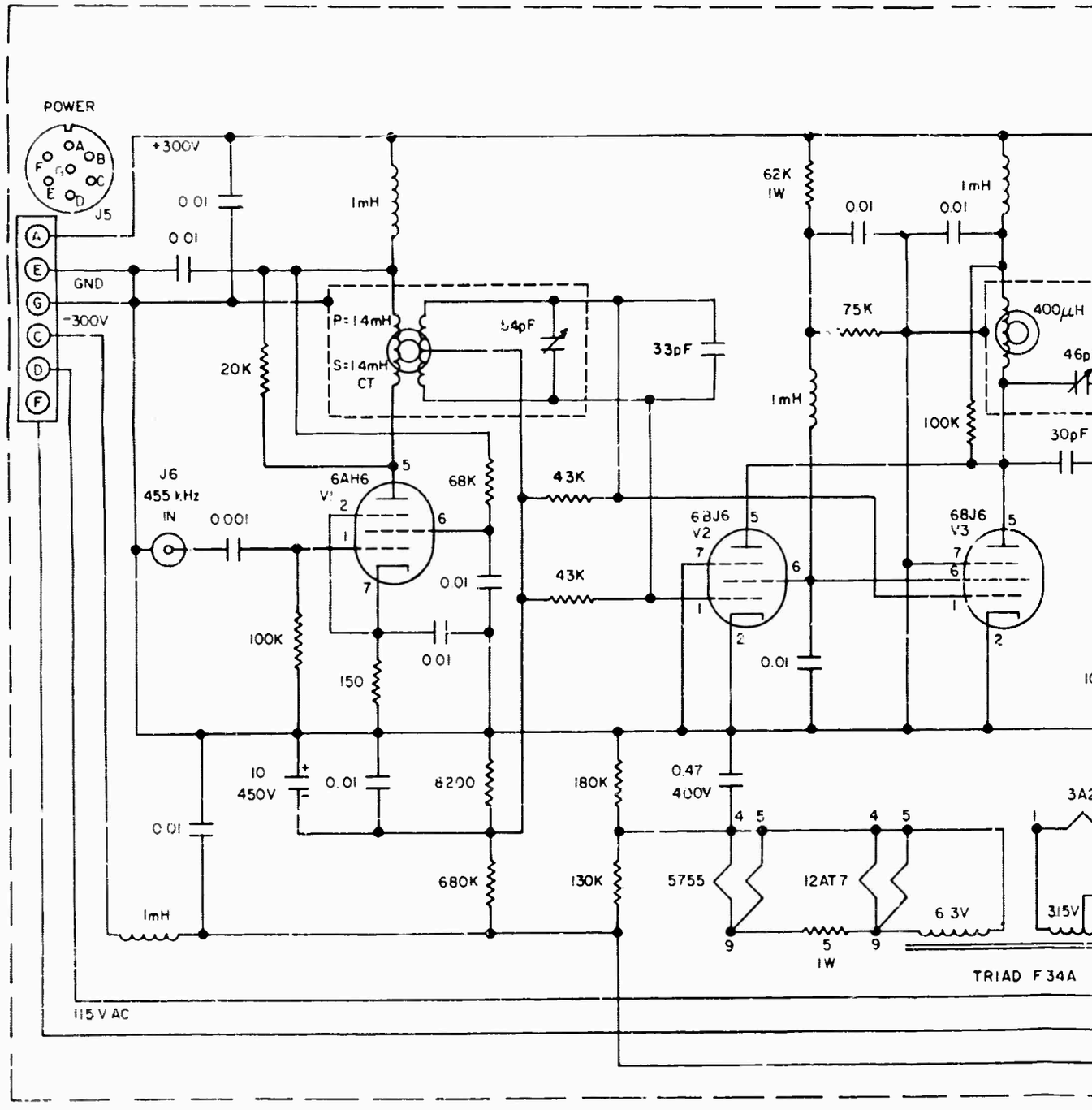
POWER
J5
+300V
GND
-300V
0.01
1mH
P=14mH
S=14mH
CT
54pF
33pF
20K
J6
455 kHz
IN
0.001
6AH6
V1
68K
43K
100K
150
10
450V
8200
180K
680K
130K
62K
1W
75K
400µH
46pF
100K
30pF
68J6
V2
68J6
V3
0.47
400V
5755
12AT7
6.3V
3A2
315V
1W
TRIAD F34A
115 V AC

D

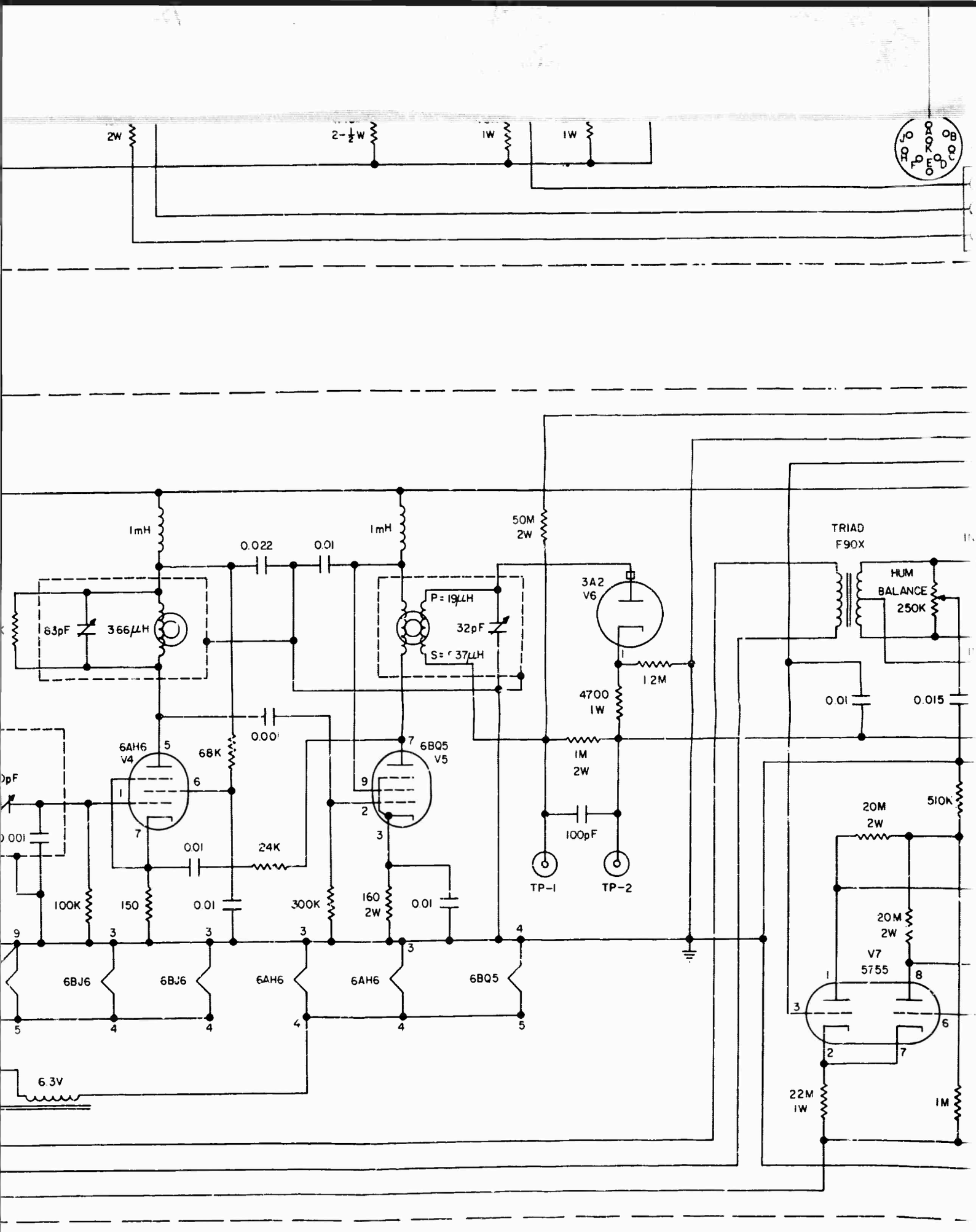

FIG. 24 FUNCTION SHELF, U-3 AND U-15

E

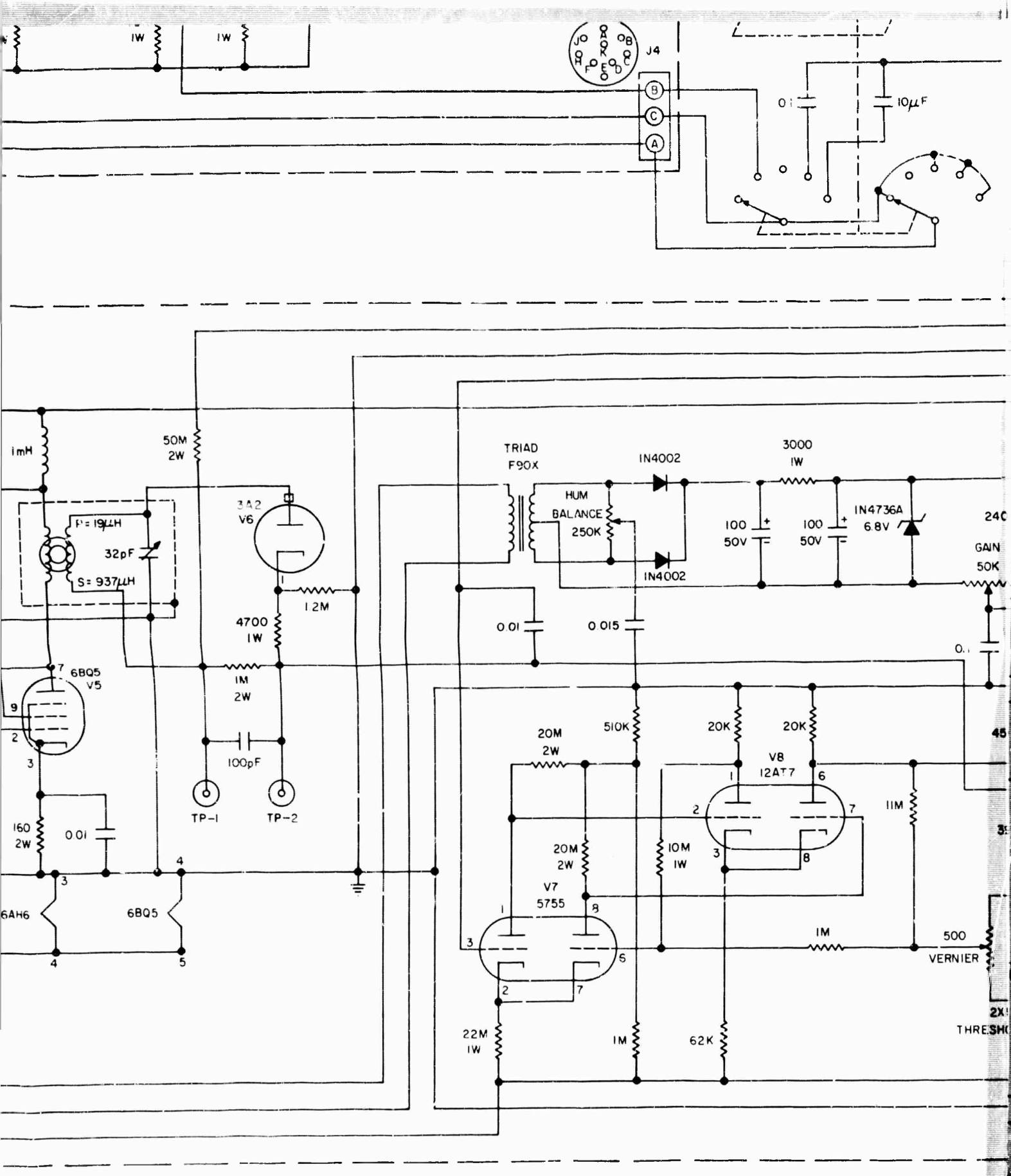

FIG. 24 FUNCTION SHELF, U-3 AND U-15

AVC	J17
RECORD OUT	J18
SHELF	J19

VALUES OF ALL CAPACITORS IN MICROFARADS UNLESS OTHERWISE INDICATED.

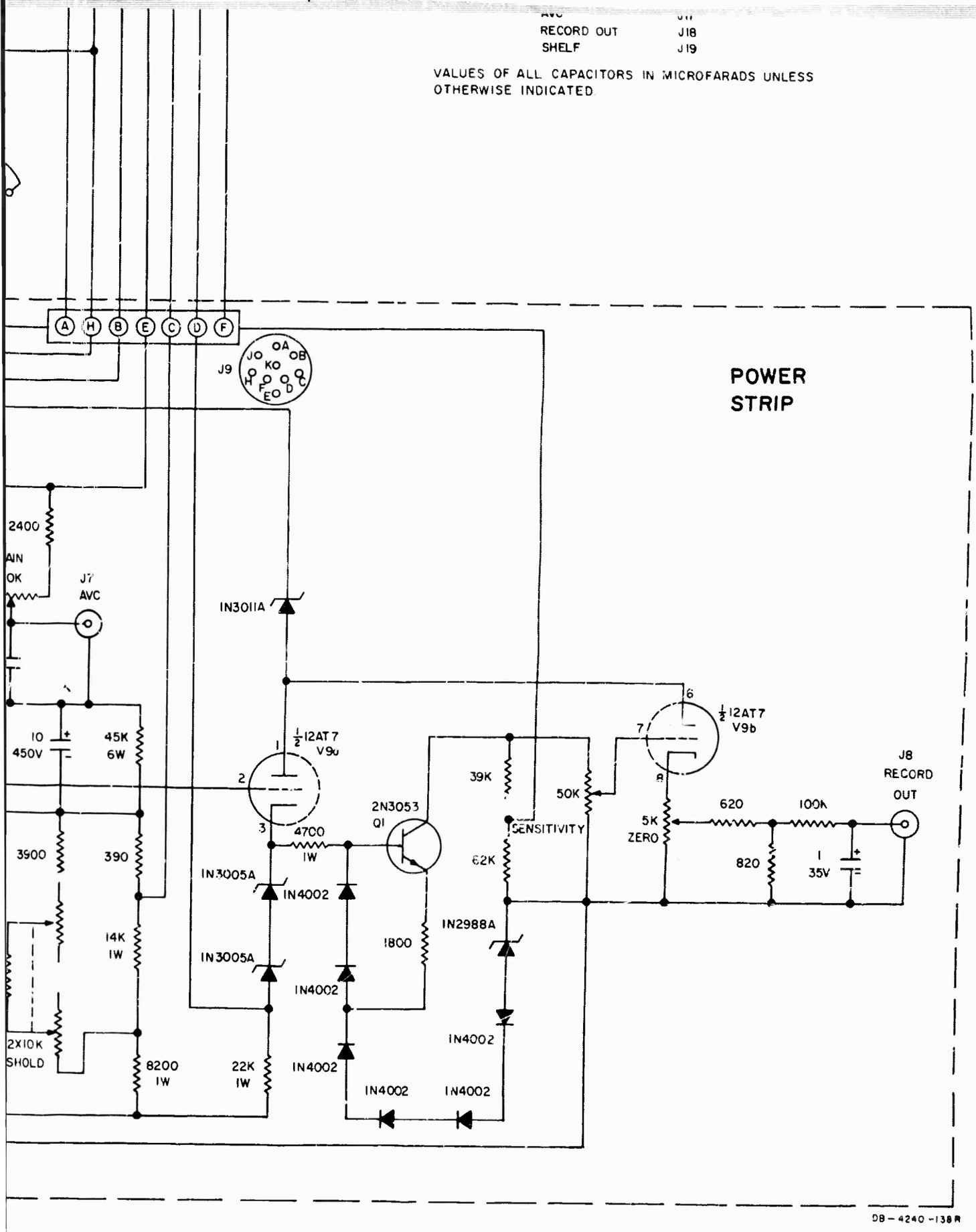

G

UNCLASSIFIED
Security Classification

DOCUMENT CONTROL DATA - R & D

Security classification of title, body of abstract and indexing annotation must be entered when the overall report is classified)

1. ORIGINATING ACTIVITY (Corporate author)
Stanford Research Institute
Menlo Park, California

2a. REPORT SECURITY CLASSIFICATION
UNCLASSIFIED

2b. GROUP
n/a

3. REPORT TITLE
MANUAL FOR ARN-3 TYPE ATMOSPHERIC NOISE MEASURING EQUIPMENT

4. DESCRIPTIVE NOTES (Type of report and inclusive dates)
Special Technical Report 27

5. AUTHOR(S) (First name, middle initial, last name)
Ralph L. Brown

6. REPORT DATE	7a. TOTAL NO. OF PAGES	7b. NO. OF REFS
November 1966	154	24

8a. CONTRACT OR GRANT NO
DA-36-039-AMC-00040(E)

b. PROJECT NO
ORDER NO. 5384-PM-63-91
ARPA ORDER NO. 371

c.

d.

9a. ORIGINATOR'S REPORT NUMBER(S)
Special Technical Report 27
SRI Project 4240

9b. OTHER REPORT NO(S) (Any other numbers that may be assigned this report)

10. DISTRIBUTION STATEMENT
Distribution of this document is unlimited.

11. SUPPLEMENTARY NOTES

12. SPONSORING MILITARY ACTIVITY
Advanced Research Projects Agency
Washington, D.C.

13. ABSTRACT

Equipment has been developed and constructed for use in studies of atmospheric noise in Thailand. Average noise power and the mean envelope voltage can be measured at eight frequencies in the VLF, LF, MF, and HF bands. The design of this equipment is derived from the National Bureau of Standards (now ESSA) ARN-2 noise-measuring equipment. The equipment is operated in conjunction with the standard ARN monopole and ground plane and so the data obtained are compatible with data from the existing worldwide network of noise stations coordinated by ESSA, Boulder, Colorado. Impulsive voltages induced in the standard antenna by local thunderstorms are recorded at several threshold levels by lightning-flash analyzer equipment to supplement the ARN type data.

This report is intended as an operation and maintenance manual. It explains the principles of operation and includes schematic diagrams and sample records as well as a description of calibration and data-reduction procedures.

DD FORM 1 NOV 1473 (PAGE 1)
S/N 0101-807-6801

UNCLASSIFIED
Security Classification

14 KEY WORDS	LINK A		LINK B		LINK C	
	ROLE	WT	ROLE	WT	ROLE	WT
radio noise						
atmospheric noise						
radio noise recorder						
ARN-3						
VLF, LF, MF, HF						
lightning flash counter						
operation and maintenance						
Thailand						
SEACORE						