USAAVLABS TECHNICAL REPORT 67-11

EVALUATION OF HIGH ENERGY RATE FORGED GEARS WITH INTEGRAL TEETH

By

Fred L. Parkinson

March 1967

U. S. ARMY AVIATION MATERIEL LABORATORIES
FORT EUSTIS, VIRGINIA

CONTRACT DA 44-177-AMC-321(T)
WESTERN GEAR CORPORATION
LYNWOOD, CALIFORNIA

Distribution of this document is unlimited

59

Disclaimers

The findings in this report are not to be construed as an official Department of the Army position unless so designated by other authorized documents.

When Government drawings, specifications, or other data are used for any purpose other than in connection with a definitely related Government procurement operation, the United States Government thereby incurs no responsibility nor any obligation whatsoever; and the fact that the Government may have formulated, furnished, or in any way supplied the said drawings, specifications, or other data is not to be regarded by implication or otherwise as in any manner licensing the holder or any other person or corporation, or conveying any rights or permission, to manufacture, use, or sell any patented invention that may in any way be related thereto.

Disposition Instructions

Destroy this report when no longer needed. Do not return it to originator.

DEPARTMENT OF THE ARMY
U. S. ARMY AVIATION MATERIEL LABORATORIES
FORT EUSTIS, VIRGINIA 23604

The objective of this program was to compare the fatigue properties of high energy rate forged gears with those of conventionally fabricated gears.

Tests results proved that the fatigue properties of gears forged with integral teeth were substantially higher than those of gears which were machined from either bar stock or simple upset forgings.

This command concurs in the conclusions made by the contractor.

Task 1F125901A01410
Contract DA 44-177-AMC-321(T)
USAAVLABS Technical Report 67-11
March 1967

EVALUATION OF HIGH ENERGY RATE FORGED GEARS WITH INTEGRAL TEETH

Final Report

Western Gear Corporation
Report No. 664-241

by

Fred L. Parkinson

Prepared by
Western Gear Corporation
Research Department
Lynwood, California

for

U. S. ARMY AVIATION MATERIEL LABORATORIES
FORT EUSTIS, VIRGINIA

SUMMARY

The fatigue properties of gears forged with integral teeth were compared with those of gears machined from bar stock and gears machined from simple upset forgings. The gears tested were manufactured from both air melt and vacuum-melt 9310 steel and tested on a single tooth fatigue testing machine at 175,000 and 157,000 psi Lewis bending stress. At both stress levels the gears forged with integral teeth had average fatigue lives approximately seven times that of the machined gears. More scatter was experienced in the fatigue data of the forged gears over that of the machined gears. However, statistical analysis by the Students "t" method shows that the low mean fatigue life of forged gears was twice as high as the high mean fatigue life of cut gears. Several metallurgical processing variables including case depth, surface hardness, grain size, and static strength were examined. No correlation between these parameters and the scatter in the fatigue data of the forged gears was found.

Neutron activation analysis was used to determine the relative wear of the four types of gears studied. Very little difference between the wear properties of the various gears investigated was observed, indicating that forging gears with integral teeth or machining gears from upset forgings does not change the wear properties over that of conventional gears machined from bar stock.

FOREWORD

This final technical report covers the work performed at Western Gear Corporation's Research Department under U. S. Army Contract DA 44-177-AMC-321(T) from July 1965 to September 1966.

The program was accomplished under the direction of Mr. Nelson Daniel, Chief of Aircraft Systems and Equipment Division, and Mr. E. R. Givens, Project Engineer of the U. S. Army Aviation Materiel Laboratories, Fort Eustis, Virginia.

Project supervision was under the direction of Mr. M. L. Headman, Director of Research, and Mr. F. L. Parkinson, Project Engineer, Western Gear Corporation. Also assisting in the project were research engineers Mr. C. V. Iverson and Mr. W. F. Lewis. Subcontract forging was performed at Precision Forge Company under the supervision of Mr. J. Rork and Mr. M. Perry.

BLANK PAGE

CONTENTS

ILLUSTRATIONS

TABLES

INTRODUCTION

Advanced design concepts coupled with the requirements of increasingly lighter weights are continually placing more stringent demands on material properties. Accordingly, present helicopter power transmission designs dictate the need for high quality gears which are lightweight and have a high performance confidence level at high operating stresses and speeds. These confidence levels are difficult to predict since the phenomena of fatigue must always be considered and the scatter of fatigue data allows for only an approximate or statistical analysis of the test results. Advances in material processing and forming techniques have been made which increase the fatigue properties of gears and other machine components. Two of these techniques are vacuum melting of steel for high cleanliness and high energy rate forging (HERF) for controlled grain flow. A polished and etched section of an HERF gear forged with integral teeth, showing the grain flow at the root, can be seen in Figure 1.

A substantial amount of research has been performed on the effect of vacuum melting on the fatigue properties of steels (1-3).* Generally, the fatigue behavior is superior in vacuum-melted compared to air-melted steels. This is considered to be the result of a lower nonmetallic inclusion content, although the lower gas content in vacuum-melted steels may also be a factor. Most of the work performed with vacuum-melted steels has been on conventional laboratory specimens and as a result, little design data is available for mechanical elements such as gears. In this program, 3-inch-pitch-diameter spur gears produced from both vacuum- and air-melted steel were evaluated for fatigue resistance using a single-tooth gear tester in which a cyclic load is applied to one tooth at a time.

A recent development in precision forging has led to the ability to produce HERF gears having integrally forged gear teeth. Besides the possible economic advantages of this technique, the forging operation produces teeth in which the grain flow in the root area is longitudinal in nature and follows the involute profile. Since bending fatigue stresses are the highest in the fillet radii of the root, metal structure and uniformity are most important in this area. The fatigue properties of metals are generally higher when the stress is applied in the longitudinal direction of grain flow as opposed to the transverse direction (4,5); hence, the possibility of increased gear fatigue properties exists when grain flow follows the tooth contour.

---

* Numbers in parentheses indicate the references at the end of the report.

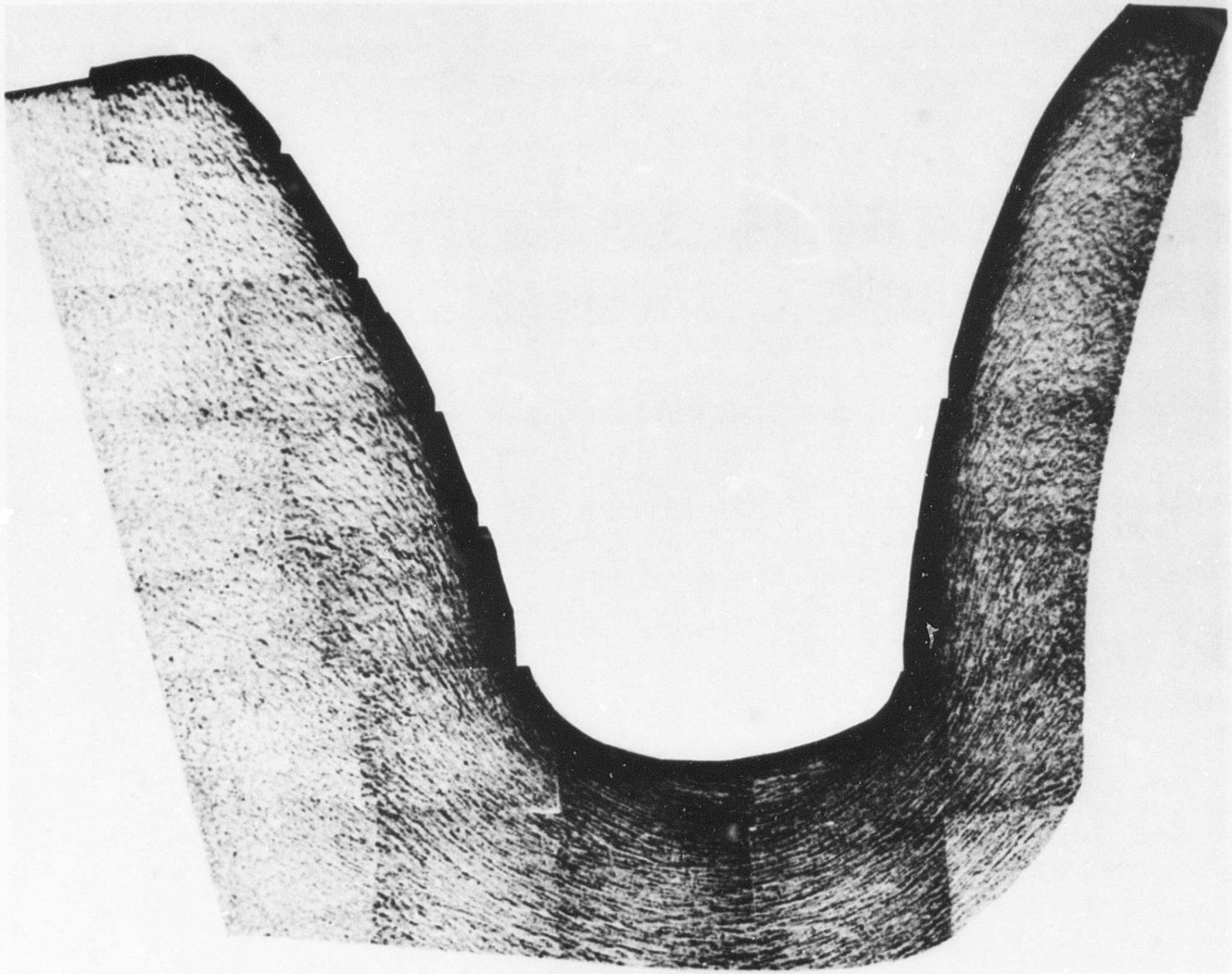

Figure 1. Etched HERF Gear Teeth Showing Grain Flow at Root.

The object of this program was to compare the fatigue properties of 3-inch-pitch-diameter AISI 9310 carburized steel gears produced by the following techniques:

1. Machined directly from 9310 vacuum-melt bar stock (AMS 6265).
2. Machined from 9310 vacuum-melt (AMS 6265) simple upset forgings.
3. Finish machined from 9310 vacuum-melt (AMS 6265) HERF gears forged with integral teeth.
4. Finish machined from 9310 air-melt (AMS 6260) HERF gears forged with integral teeth.

The wear properties of the above four types of gears were examined using neutron activation analysis.

PROCEDURE

MATERIALS

Gears were manufactured from either air-melt or vacuum-melt 9310 carburizing steel. The pertinent AMS specifications for the steel used are AMS 6260E and AMS 6265, respectively. Two different bars of air-melt 9310 were utilized (3-inch and 5-1/2-inch diameter), whereas the vacuum-melt steel gears were all manufactured from one 3-1/4-inch-diameter bar. The chemical compositions of the three bars are listed in Table I.

TABLE I
CHEMICAL COMPOSITIONS OF AISI 9310 STEEL

Element	AMS 6260E 5-1/2-Inch Diameter	AMS 6260E 3-Inch Diameter	AMS 6265 3-1/4-Inch Diameter
C	.11	.09	.10
Mn	.59	.55	.53
P	.004	.010	.009
S	.012	.013	.015
Si	.30	.29	.27
Ni	3.30	3.11	3.19
Cr	1.22	1.22	1.32
Mo	.11	.10	.12

FORGING

Both the forged gears with integral teeth and the simple upset (pancake) forgings were forged on a 620 Dynapak HERF machine. The Dynapak is a pneumatic high-velocity forging machine which utilizes the energy obtained from rapidly expanding compressed nitrogen gas to drive a light ram onto the workpiece. The force of this gas is capable of producing speeds of 2000 inches per second when the maximum gas pressure of 2000 psi is used. This pressure, called the fire pressure, can be adjusted from 300 to 2000 psi to generate the ram speed and, hence, available forming energy required to forge a given size or configuration. A photograph of a Dynapak machine is shown in Figure 2, and a more extensive description of the Dynapak machine and its operation can be found elsewhere (6).

Upset Forgings

The simple upset forgings were produced by upsetting a cylindrical billet between two flat dies in the Dynapak machine. The size required for the upset forgings from which the gears were subsequently machined was 3-3/4 inches diameter by 1-3/8 inches for the 3-inch-pitch-diameter pinion and 5-3/4 inches diameter by 1-3/8 inches for the 5-inch-pitch-diameter gear.

Figure 2. View of Model 1220 Dynapak.

Using an upset ratio of 3:1, as is normal practice, the billet sizes were hence 2-1/8 inches diameter by 4-1/8 inches for the 3-inch pinion and 3-1/4 inches diameter by 4-1/8 inches for the 5-inch gear upset. All upsets were forged at 2000°F furnace temperature, with the 3-inch upsets struck three times using 1150-psi nitrogen fire pressure and the 5-inch upsets struck six times using 1400-psi fire pressure. Each billet was given a 30-minute "soak" at temperature before forging. Figure 3 shows the upset forgings before machining. The scale was sandblasted from the as-forged surfaces and the diameter and thickness of each upset were measured and recorded.

Gears Forged With Integral Teeth

In order to insure maximum uniformity of material, steel from the same bar (and hence from the same heat) of 3-1/4-inch-diameter vacuum-melt 9310 was used in the upset forgings, in the forging of gears with integral teeth, and in the machining of gears directly from bar stock. Sinch the billet diameter for forging and the stock diameter for machining were different, the 3-1/4-inch-diameter bar was machined down to a billet diameter of 1-7/8 inches diameter by 2-1/2 inches. This billet was upset to a 3-inch diameter, and the diameter was machined to 2-3/4 inches which was 1/8 inch less than the inside diameter of the bottom die. This was to remove any possible decarburization and to provide a smooth surface from which to begin forging the teeth in the gear. Also, with this configuration and size, the hot billet was more easily placed in the center of the bottom die. Figures 4 and 5 show the bottom dies used in forging the 3- and 5-inch gears, respectively, with integral teeth. The forging drawings for both the 3- and 5-inch gears can be seen in Appendix I.

The top die consisted of a punch with a 2-inch diameter and with a 1/4-inch radiused recess to provide the required hub on the 3-inch gear. An insert, with the same recess for the hub as the top die, was held fixed in the bottom die 5/8 inch below the top surface of the bottom die. The bottom insert was connected to a hydraulic ram which was used to eject the gear from the die seconds after it had been forged. The die steel used was Durodie Temper 2, heat treated to a hardness of R_c44. As the ram contacted the workpiece, the teeth were formed by metal flowing radially into the tooth cavities of the die and extruding longitudinally down these cavities approximately 1/8 inch. Figure 6 shows a gear forged with integral teeth in the as-forged condition.

The gears were forged in one blow from the machined upset forging using a forging temperature of 1975°F. The fire pressure used was 800 psi for the 3-inch gears and 1000 psi for the 5-inch gears. Figures 7 and 8 show the 3- and 5-inch gears, respectively, forged with integral teeth in the as-forged condition with the flash removed.

GEAR FINISHING

The dimensions for the finished 3-inch-diameter pinion and the 5-inch-diameter gear are shown in Appendix II. The gears were 14 pitch, 20° pressure

Figure 3. 3-Inch - and 5-Inch-Diameter Upset Forgings.

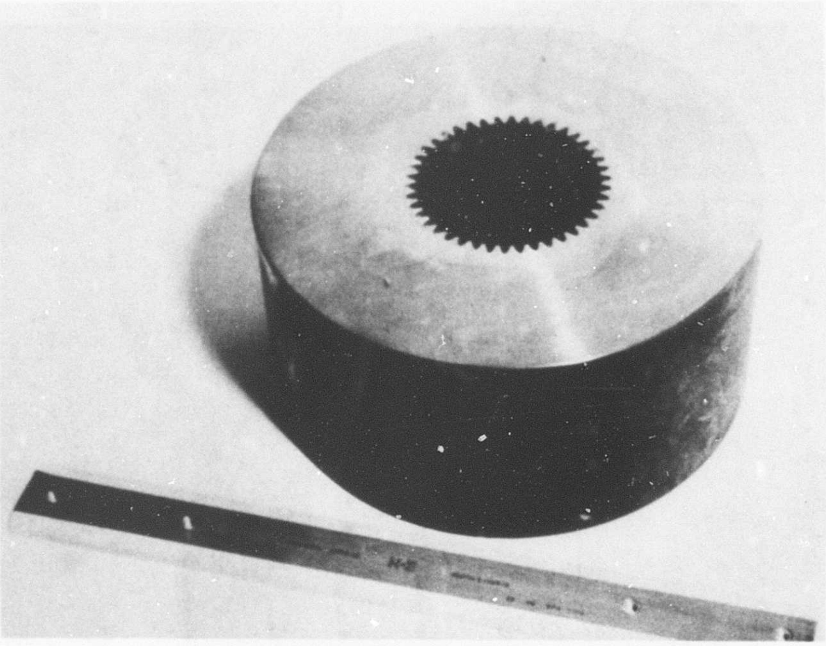

Figure 4. Bottom Die Used in Forging 3-Inch Gears with Integral Teeth.

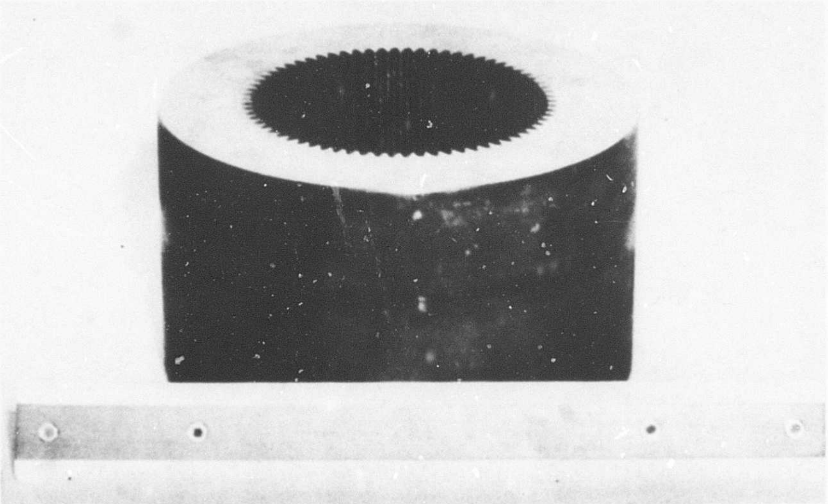

Figure 5. Bottom Die Used in Forging 5-Inch Gears with Integral Teeth.

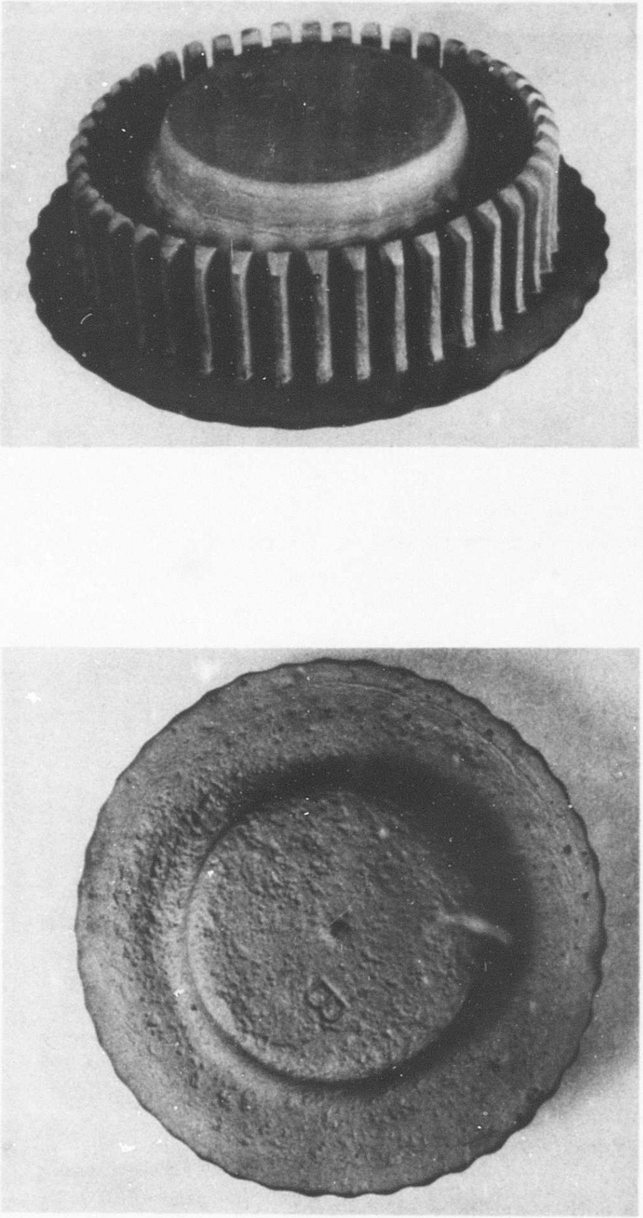

Figure 6. As-Forged 3-Inch Gear with Integral Teeth.

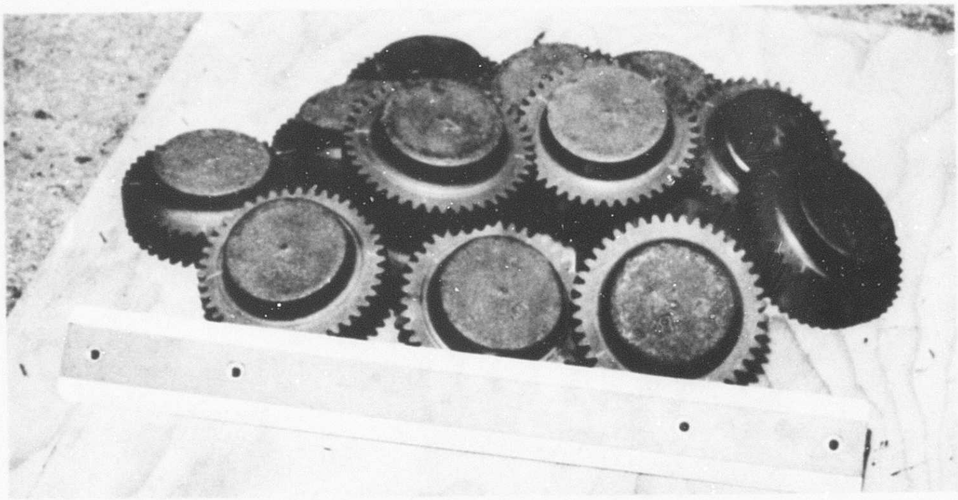

Figure 7. As-Forged 3-Inch Gears with Integral Teeth with Flash Removed.

Figure 8. As-Forged 5-Inch Gears with Integral Teeth with Flash Removed.

angle, AGMA Quality No. 12, with the 3.000-inch-pitch-diameter pinion having 42 teeth and the 5.000-inch-pitch-diameter gear having 70 teeth. The forged gears, upset forgings, and bar stock were rough machined to approximately 0.010 inch over the finished dimensions before they were carburized, heat treated, and finish machined at Western Gear Corporation's Precision Products Division. The gears and pinions produced from bar stock, the upset forgings, and HERF 5-inch gears were rough hobbed before carburizing and heat treatment, whereas the pinions with integral teeth were given a light rough grind before carburizing and heat treatment. All gears were manufactured to the same dimensions before carburizing in order to insure identical case depths and surface hardness after the gears were finished to blueprint.

All the gears were heat treated in one lot at the same time in the same furnaces and quenching media. In this way, case depth, microhardness, and other variables which are affected by heat treatment would be as identical as possible from gear to gear. The following heat treatment procedure was used to produce a case depth of .039/.041 inch and a surface hardness of 59-62 R_c, as required by the specifications in Appendix II:

Carburize

1700°F for 7 hours in natural gas carburizing atmosphere. Atmosphere cool.

Quench

Heat to 1500°F and hold for 3/4 hour. Quench in a Martemp salt bath at 350°F.

Temper

Heat to 350°F and hold for 2 hours.

Subzero Cool

Hold at -120°F for 2 hours.

TESTING PROCEDURE

Fatigue Tests

Fatigue testing of the four groups of 3-inch-pitch-diameter pinions (produced from 9310 vacuum-melt bar stock, 9310 vacuum-melt upset forgings, and integral tooth HERF gears, from both 9310 vacuum- and air-melt steel) was performed on Western Gear Research Department's single-tooth gear tester, a photograph of which is shown in Figure 9. Basically, the tester consists of a pulsating hydraulic system produced by the stroke of six plungers all operating in phase. The cam shaft to which the plungers are connected is driven at 1000 rpm by a 3-phase, 440-volt, 5-horsepower

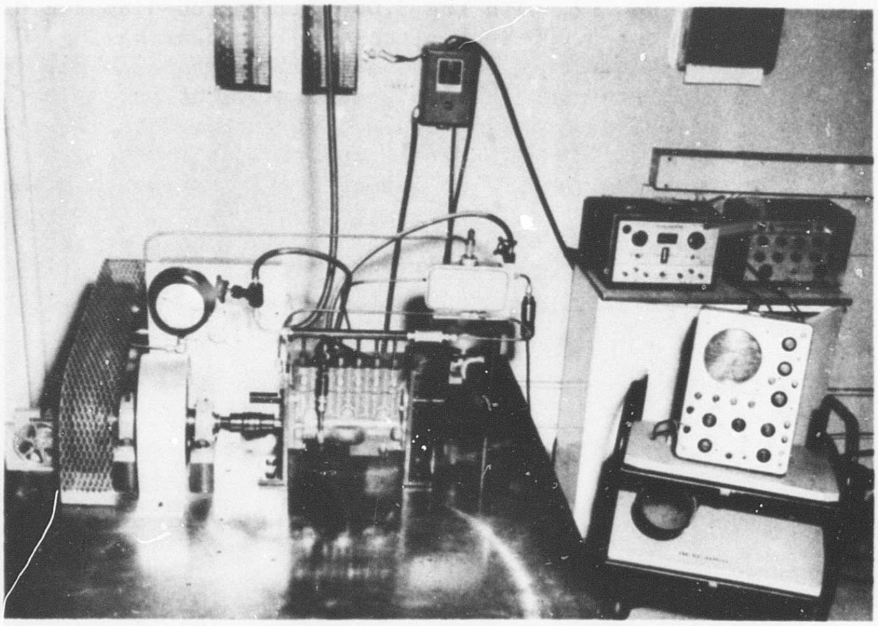

Figure 9. Single-Tooth Gear Tester.

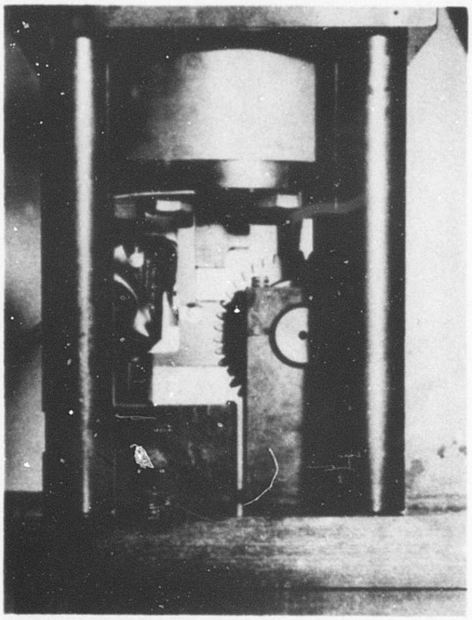

Figure 10. Tooth Loading Arrangement on Single-Tooth Gear Tester.

electric motor. The hydraulic pressure is transmitted to a 1-3/8-inch-diameter load cylinder and the load transmitted to a single-gear tooth through a hardened steel load column. The load is applied .020 inch from the tip of the test tooth in a direction tangent to the base circle of the test gear. The test gear is supported by a ground shaft, and the applied load is reacted through a reaction tooth which is six teeth away from the test tooth. The reaction tooth contacts a support block approximately at the pitch diameter. Figure 10 shows tooth loading arrangement. Since the stress developed at the root is proportional to the beam length (distance from point of load application to root), the stress on the reaction tooth is approximately one-half that of the test tooth; as a result, the test tooth and not the reaction tooth fails during testing, as desired. Connected to the hydraulic system is a pressure transducer which is balanced using a Baldwin switching and balancing unit. This system is balanced under no-load conditions; when a load is applied, the transducer output is amplified and passed into a Type 515A Tectronic oscilloscope. A standard calibrated pressure gage was used to load the hydraulic system. The hydraulic pressure is adjusted by means of a micrometer screw which controls the volume of the fluid delivered by the six plungers.

The oscilloscope reading was checked every few minutes throughout the entire test, and no observable variations in the applied load were found in any of the tests. The hydraulic system was prepressurized to 10 psi to insure the application of identical load profiles. A calibration resistor was installed and the electronic circuits were checked for balance before and after each fatigue test was performed.

Generally, six teeth symmetrically spaced around the gear were selected from each test gear and failed in fatigue. The testing order was such that two teeth from a bar stock gear were tested, then two teeth from a gear machined from the upset forgings, then two teeth from a HERF gear with integral teeth, etc. With this technique, any drifts in the hydraulic or electronic systems would only increase the scatter rather than show up as erroneous trends in the data for any one material.

Wear Tests

The wear properties of the HERF gears with integral teeth and the conventional gears were studid using neutron activation analysis. In these tests, the 3-inch-diameter pinion was run against the 5-inch-diameter gear on a four-square dynamic gear tester at 6000 rpm. The tester is load compensating for gear wear and has a continuous torque readout. A photograph of the gear tester is shown in Figure 11. The gears were run for 5 hours at 249,000-psi Hertz compressive stress, with four oil samples being taken during the first hour and one sample at hourly intervals for the subsequent 4 hours downstream from the gear mesh. Two gear sets were run and oil samples taken before the system was flushed and new oil used. A control sample was taken at the beginning of each test in order to provide a base line for analysis.

Neutron activation analysis is a method of measuring minute quantities of wear particles in an oil by bombarding the oil and particles with neutrons in a nuclear reactor. Irradiated elements in the wear particles undergo subsequent decay, giving off their characteristic type and amount of radiation. Manganese was used as the analyzed element, since there was a sufficient amount (0.54 percent) present as an alloying element in the 9310 steel and since the isotope Mn-56 has a convenient half-life. By measuring the gamma radiation produced by the decaying manganese in the wear particles after the oil sample has been activated, the relative wear of the gears manufactured by the four different procedures used in the program can be determined.

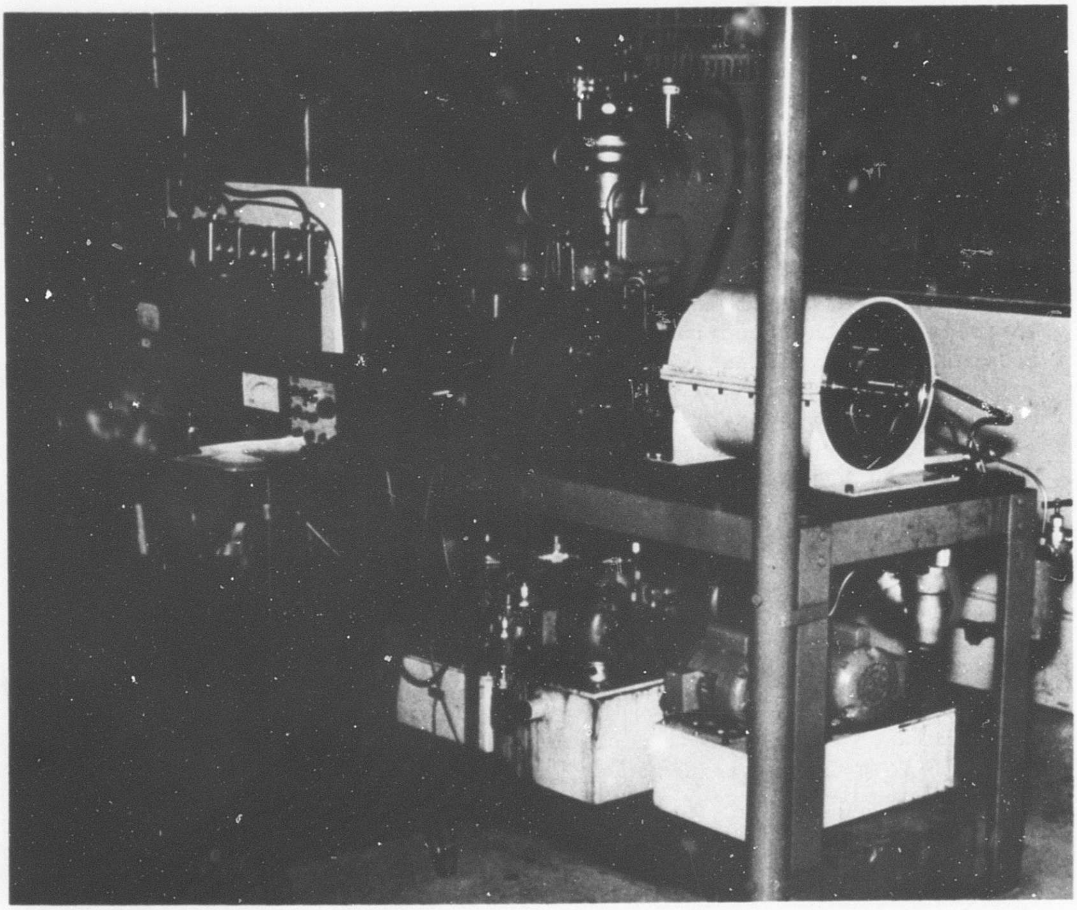

Figure 11. Dynamic Gear Tester Used for Wear Studies.

RESULTS AND DISCUSSION

FORGING

Upset Forging

No forging difficulties were encountered with the simple upset forgings, the following being the dimensions obtained:

3-Inch Pinion:

Upset thickness - 1.25 ± .07 inch
Upset diameter - 4.05 ± .06 inch

5-Inch Gear:

Upset thickness - 1.29 ± .08 inch
Upset diameter - 5.98 ± .16 inch

Gears Forged With Integral Teeth

Table II gives the root diameter and over-pin dimensions for the 3-inch-diameter pinions in the as-forged condition. Also shown are the over-pin measurements for both the air-melt and vacuum-melt 9310 5-inch gears, along with the root diameter measurements for the vacuum-melt 5-inch gears. The total variation in over-pin measurements between all the 3-inch pinions was 0.010 inch, although 84 percent of the pinions were within the tolerance 3.211 ± .002 inch for over-pin measurement. The total variation in root diameter was .017 inch. This necessitated removing up to .008 inch from the root as required to achieve concentricity and root clearance. Since the theoretical root diameter of the 5-inch gears was 4.821 inches, up to 0.069 inch material had to be removed. Since this was too much material to be removed by grinding, these gears were hobbed before carburizing, just as were the 5-inch gears produced from bar stock and the upset forgings. All the backlash was taken up on the gear to avoid removing too much grain flow from the pinion.

One test pinion (4N) was checked for tooth-to-tooth and accumulative spacing error in the as-forged condition. The maximum deviation from theoretical tooth spacing was found to be 0.0010 inch, and the total accumulative error was found to be 0.0032 inch. The composite error was established as 0.0082 inch for this pinion. These errors, although large for high-quality ground gearing, are low for an as-forged product.

After the gears forged with integral teeth had been finish machined, they were examined under a stereomicroscope at 30 magnification. On many teeth, imperfections were found at the center of the root radii where the final grinding operation did not clean up the as-forged surface. Although this produces an effect similar to using a protuberant hob to preclude the

TABLE II
ROOT DIAMETER AND OVER 0.120-INCH PIN DIMENSIONS OF THE AS-FORGED PINIONS AND GEARS WITH INTEGRAL TEETH

Gear	Over 0.120-Inch Pins, Avg of Two (in.)	Root Diameter (in.)
	3-Inch-Diameter Pinion - Vacuum-Melt 9310	
2A	3.209	2.839
2B	3.210	2.847
2C	3.209	2.847
2D	3.210	2.846
2E	3.211	2.846
2F	3.210	2.846
2G	3.210	2.845
2H	3.211	2.845
2I	3.211	2.845
2J	3.212	2.845
2K	3.206	2.837
2L	3.211	2.844
2M	3.207	2.844
2N	3.208	2.847
2O	3.209	2.846
2P	3.210	2.842
	3-Inch-Diameter Pinion - Air-Melt 9310	
4A	3.211	2.839
4B	3.209	2.836
4C	3.212	2.844
4D	-	-
4E	3.211	2.835
4F	3.211	2.838
4G	3.211	2.835
4H	3.209	2.836
4I	3.213	2.845
4J	3.209	2.836
4K	3.213	2.836
4L	3.211	2.840
4M	3.212	2.841
4N	3.216	2.850
4O	3.210	2.843
4P	3.210	2.840
4Q	3.206	2.833

TABLE II - CONTINUED

Gear	Over 0.120-Inch Pins, Avg of Two (in.)	Root Diameter (in.)
	5-Inch-Diameter Gear - Vacuum-Melt 9310	
1A	5.225	4.863
1B	5.228	4.867
1C	5.227	4.875
1D	5.234	4.890
1E	5.218	4.862
1F	5.222	4.874
1G	5.222	4.862
1H	5.225	4.875
1I	5.227	4.865
1J	5.227	4.877
1K	5.222	4.862
1L	5.225	4.875
1M	5.241	4.883
1N	5.230	4.876
	5-Inch-Diameter Gear - Air-Melt 9310	
3A	5.239	-
3B	5.225	-
3C	5.232	-
3D	5.242	-
3E	5.239	-
3F	5.219	-
3G	5.225	-
3H	5.225	-
3I	5.239	-
3J	5.231	-
3K	5.224	-
3L	5.235	-

necessity of touching the fillet radius during the finish grinding operation, it was felt that this condition was undesirable for the forged gear evaluation, since the condition was not uniform on all teeth and since they were to be evaluated against cut gears that were fully ground.

In order to insure complete finishing of the forged teeth, a new die was manufactured with a full fillet radius and additional gears were forged for evaluation. Figure 12 shows the difference in the two dies.

WEAR TESTS

An analysis of the wear particle size was performed, and the results (which are given in Appendix III) show that approximately 80 percent of the wear particles were smaller than a 10-micron diameter. Those particles above 10 microns had an approximate size of 20-25 microns, and those below 10 microns had an approximate size of 5 microns. A 10-micron synclinal filter was placed downstream from the sampling port which removes almost all of the wear particles greater than 10 microns. Therefore, if 10 percent of the wear particles in the oil have an average particle size of 20 microns and the remaining 90 percent have an average size of 5 microns, a minimum of 88 percent of the mass of all the wear particles is held in the filter. On this basis, and assuming that the wear rates at the time intervals outlined in the Procedure section were constant over that specific time period, the relative accumulative wear was obtained by adding the total wear in micrograms of manganese for each interval that the wear sample was taken. As mentioned, a minimum of 88 percent of the wear particle mass is entrapped in the filter, allowing a buildup of a maximum of 12 percent in the oil system itself. This will result in a somewhat higher wear value in the later stages of the test. However, the buildup will be similar for all the tests, and the relative wear determination will not be greatly affected.

TABLE III
RELATIVE ACCUMULATIVE WEAR OF THE FOUR GEAR SETS

Gear Type	Gear Number	Relative Wear Rates (micrograms Mn/sec)	Average Wear Rates (micrograms Mn/sec)
Forged Gear from	2C	2.31	2.87
Vacuum-Melt 9310	2H	3.43	
Forged Gear from	4H	2.28	2.88
Air-Melt 9310	4J	3.48	
Gear Machined from	6C	2.87	2.83
Upset Forged Vacuum-Melt 9310	6B	2.79	
Gear Machined from	8H	3.79	3.06
Bar Stock Vacuum-Melt 9310	8B	2.34	

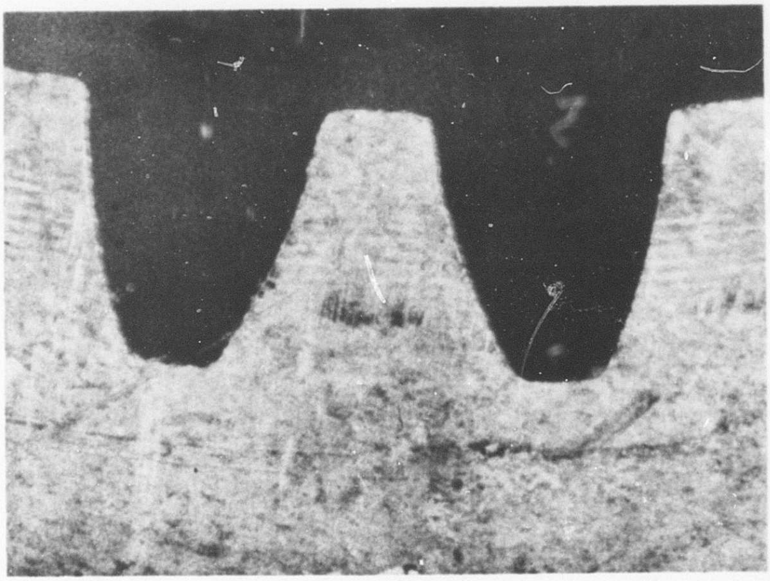

First Die

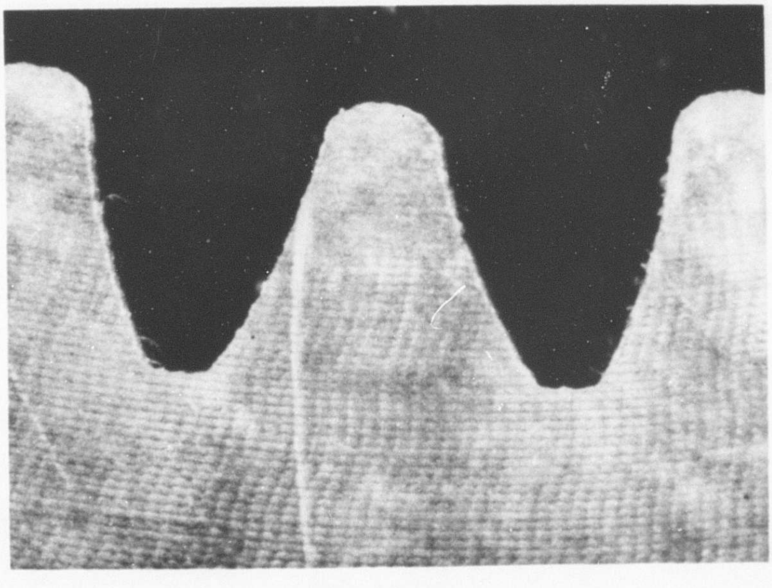

Second Die

Figure 12. Enlarged View of Root Section of Dies.

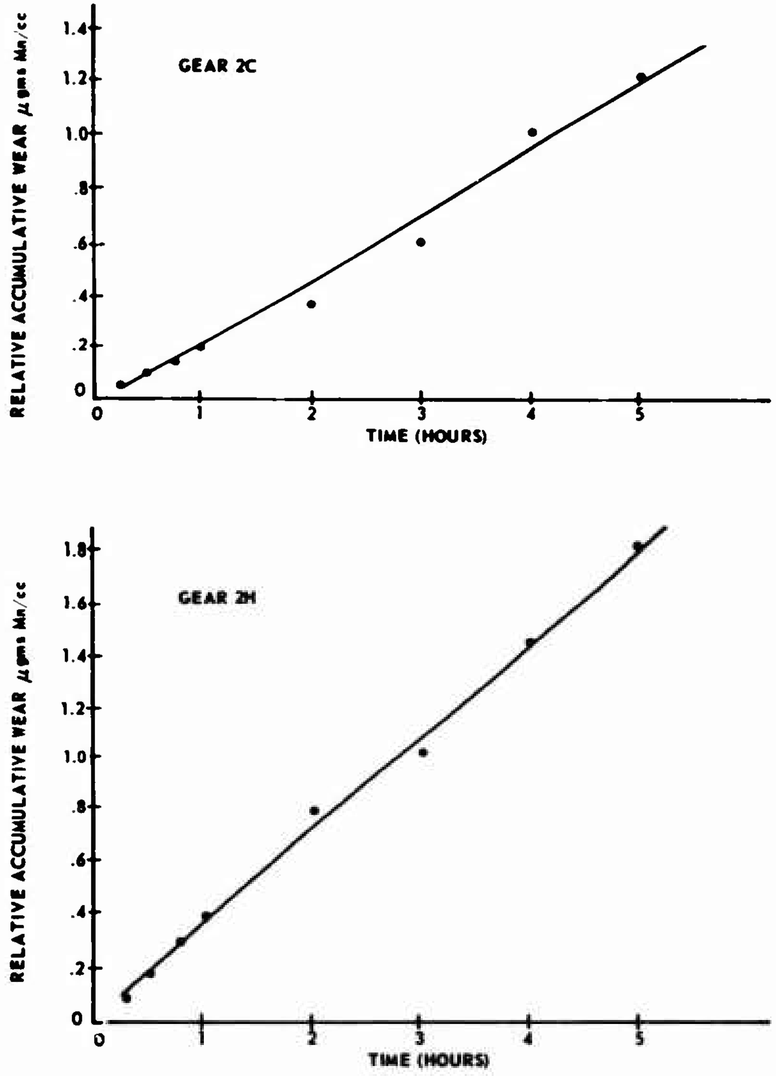

Figure 13. Wear Test Results for Gears Forged with Integral Teeth from Vacuum-Melt 9310.

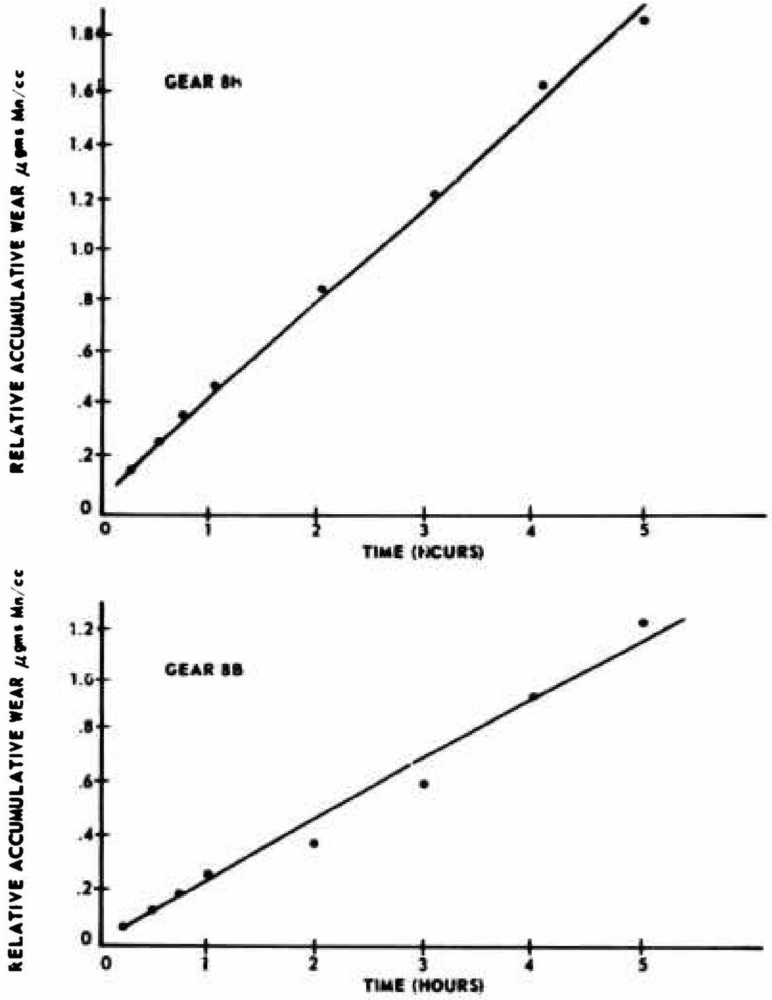

Figure 14. Wear Test Results of Gears Machined from Vacuum-Melt 9310 Bar Stock.

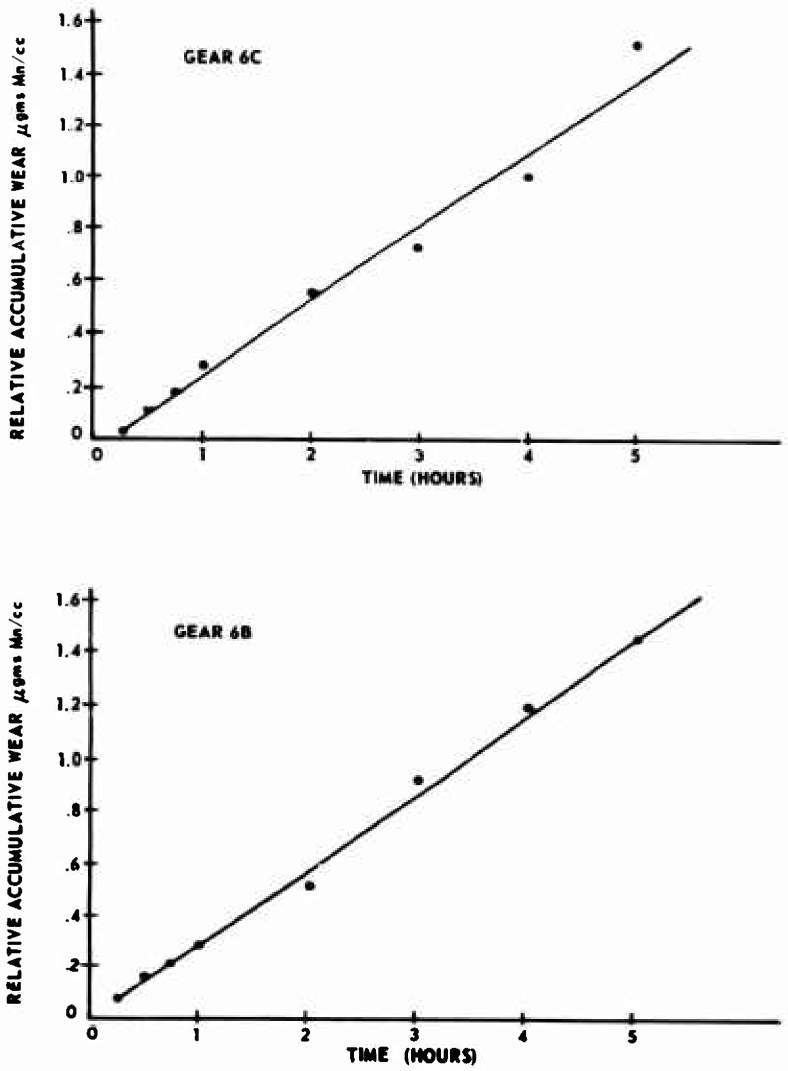

Figure 15. Wear Test Results of Gears Machined from Vacuum-Melt 9310 Upset Forgings.

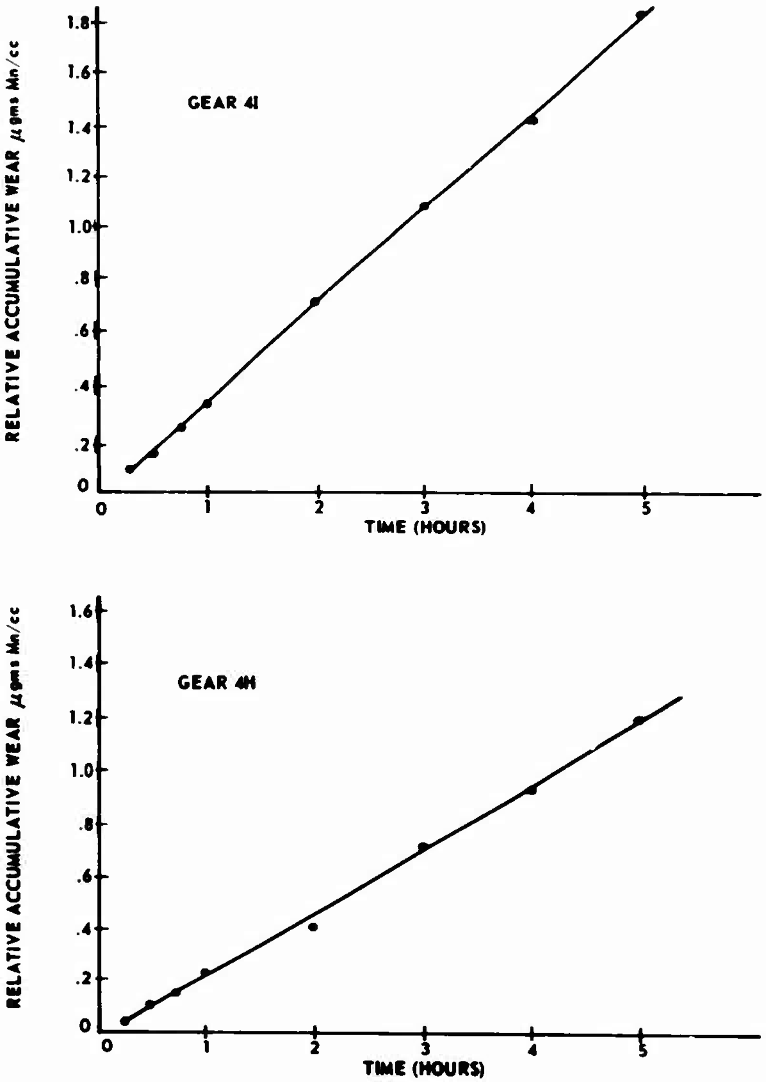

Figure 16. Wear Test Results for Gears Forged with Integral Teeth from Air-Melt 9310.

The results of the wear studies using neutron activation analysis are shown in Figures 13 through 16, where the relative accumulative wear is plotted versus running time. As can be seen, all the wear curves are quite linear. Table III shows the relative wear rates for the four sets of gears.

Very little difference between the wear properties is indicated from the results in Table III. On this basis, one can conclude that forging gears with integral teeth or machining gears from upset forgings does not affect gear wear properties.

FATIGUE TESTS

Initial Fatigue Tests

Initially, all tests were performed at a bending stress level of 175,000 psi calculated from the standard Lewis equation as follows:

$$S_b = \frac{F_b}{yb\ CP} \qquad (1)$$

where

y = standard y factor - .126 for 14 pitch 20° pressure angle, 3.000-inch-pitch-diameter gears
b = face width - .375 inch
CP = circular pitch = $\pi/14$ for 14-inch diametral pitch gears
F_b = $F_r \cos 20^\circ$ where F_r is the force acting at the tooth tip in a direction tangent to the base circle.

At 175,000-psi Lewis bending stress, the arithmetic average of the cycles to failure for the 10 gear teeth from the gears machined from bar stock was 34,600 cycles and the arithmetic average for the gears machined from the simple upset forgings was 32,300 cycles, as shown in Tables IV and V, respectively. Both types of gears showed only a moderate amount of data scatter, with the high and low values of cycles to failure differing by a factor of 2.7. This is generally the amount of scatter experienced in most fatigue testing.

The results of the initial fatigue tests on the gears forged with integral teeth appeared at first to be quite confusing. Some teeth in which prior examination showed no root defects showed quite low cycles to failure. This situation is much more evident in the fatigue results of the vacuum-melt 9310 gears forged with integral teeth. Here, more than half of the teeth tested showed cycles to failure of approximately one-half that of the established average cycles for the gears cut from bar stock and the upset forgings.

The data listed in Table VI show the results for only those teeth that completely cleaned up in the root area. The arithmetic average of these tests is 273,000. The wide scatter in the data can be seen from this table. However, it is clearly evident that except for the lowest one or two data points, the cycles to failure are much higher than the upset forged or bar

TABLE IV
FATIGUE RESULTS OF TEST TEETH FROM GEARS CUT FROM BAR STOCK

(Stress Level - 175,000-psi Lewis)

Test Tooth	Cycles to Failure
8O-3C	22,600
8N-18	23,000
8N-30	23,600
8M-6	25,300
8N-36	30,900
8N-24	33,500
8O-24	33,800
8N-6	44,800
8O-30	48,000
8N-12	60,700

TABLE V
FATIGUE RESULTS OF TEST TEETH FROM GEARS CUT FROM UPSET FORGINGS

(Stress Level - 175,000-psi Lewis)

Test Tooth	Cycles to Failure
6N-18	21,800
6N-30	25,900
6N-36	26,400
6O-18	26,700
6N-24	27,000
6N-6	29,400
6O-12	36,800
6N-12	36,900
6O-24	38,800
6O-30	40,200
6O-36	44,900

stock gears, with the higher values in the several-hundred-thousand-cycle range compared to the 35,000 cycles for the bar stock gears.

Fatigue Tests with Full-Radius Die

As a result of the wide scatter in fatigue properties shown for the gears forged with integral teeth, more gears were forged from a die which resulted in full-radius roots, as shown in Figure 12 and Appendix IV. Although no quantitative analysis was possible to evaluate the effect on fatigue of the grain flow caused by the sharp root-forming contour of the die, it was felt that this could have greatly affected the forged gear fatigue life. The new die configuration provided a round-edged orifice effect to optimize the material flow pattern during the forging operation. The new gears were forged from the same 9310 vacuum-melt material as before and were finish machined and heat treated to the same specifications as those in Phase I. Testing was conducted on the single-tooth gear tester. The bending stress was lowered from 175,000 psi to 157,000 psi in order to obtain more cycles before fatigue failure.

The fatigue properties of forged gears tested in this phase were considerably better than those evaluated during Phase I. As in Phase I, some of the gear teeth showed imperfections which are caused by insufficient stock

TABLE VI
FATIGUE RESULTS FOR GEARS FORGED WITH INTEGRAL TEETH (INITIAL DIE)
(Stress Level - 175,000-psi Lewis)

Test Tooth	Cycles to Failure
4L-36	18,200
4I-24	33,700
4L-18	35,300
4H-12	67,900
4H-18	85,000
4H-38	91,900
4I-6	119,100
4L-30	126,000
4H-24	169,000
4I-12	267,000
4I-18	275,000
4I-37	308,000
4I-24	344,000
4H-31	571,600
4I-30	660,000
4H-6	1,050,000
Arithmetic Average:	273,000

for cleanup during the finish grinding operation. The forged gear teeth that did not show imperfections were tested alternately with cut gear teeth. The results of these tests are shown in Tables VII and VIII.

As in Phase I, there is a somewhat greater spread in the fatigue results of the forged gears over the cut gears. However, in Phase II there were no critical premature failures. The arithmetic average cycles to failure for cut bar stock gears was 37,600 at 157,000-psi bending stress. At the same stress level, the average life for the forged gear teeth was 286,000 cycles. Also, it can be seen in Table VII that out of 13 test points, 6 teeth lasted more than 250,000 cycles without failure. The Students "t" test was used to analyze these results statistically with the details of the analysis shown in Appendix V. This analysis shows that with a 95 percent confidence level, the mean life of the cut gears would lie between 32,100 cycles and 49,400 cycles at 157,000-psi bending stress, whereas the mean life of the integrally forged tooth gears would lie within the 79,000- to 282,000-cycle range.

Again, it must be pointed out that 6 of the 13 tests were stopped at 250,000 cycles; hence, the average of 286,000 cycles for the 13 tests is lower than the actual average would have been, had all 13 tests been run to failure. Since test number 8 ran for 1,911,000 cycles without failure, it is conceivable that some of the tests which were stopped at 250 000 cycles would have lasted at least this long or even longer. Certainly the forged gear teeth with longitudinal grain flow in the root area possess the ability to last many times the number of cycles of the machined bar stock or simple upset forged gear teeth.

METALLURGICAL ANALYSIS

In order to determine possible reasons for the wide scatter in the data and the low fatigue properties of some gears, several metallurgical parameters were investigated.

Microhardness Traverses

Using a Tukon microhardness tester with a 10.25 mm objective lens and a 500 gm load, a series of microhardness measurements were taken on the failed teeth and root area. These microhardness measurements and traverses provided a means of comparing the surface hardness, case depth, hardness gradient, etc., for all the various types of gear teeth tested. A typical hardness traverse is shown in Figure 17. There was very little difference among the over 30 microhardness traverses taken.

Generally, the case depth, hardness gradient, and core hardness were very similar for all the gear teeth and root areas examined. The case depth was found to be .040 ± .002 inch, with the R_c hardness gradient being quite linear at approximately 17 R_c points per .040 inch. The core hardness was R_c 41/43. Several surface hardness measurements were taken on both the fractured tooth and adjacent root area by measuring the hardness at

TABLE VII
FATIGUE RESULTS FOR GEARS FORGED WITH INTEGRAL TEETH (FULL ROOT RADIUS)
(Stress Level - 157,000-psi Lewis)

Test	Cycles to Failure
1	250,000*
2	250,000*
3	52,100
4	250,000*
5	250,000*
6	250,000*
7	160,000
8	1,911,000*
9	75,300
10	31,000
11	65,600
12	73,400
13	105,200
Arithmetic Average:	286,000

*No failure occurred - test stopped.

TABLE VIII
FATIGUE RESULTS FOR CUT GEARS
(Stress Level - 157,000-psi Lewis)

Test	Cycles to Failure
1	26,800
2	49,800
3	24,500
4	38,500
5	54,700
6	49,400
7	55,600
8	108,600
9	38,800
10	30,000
11	39,700
12	30,500
13	24,300
14	42,800
15	33,200
Arithmetic Average:	37,600

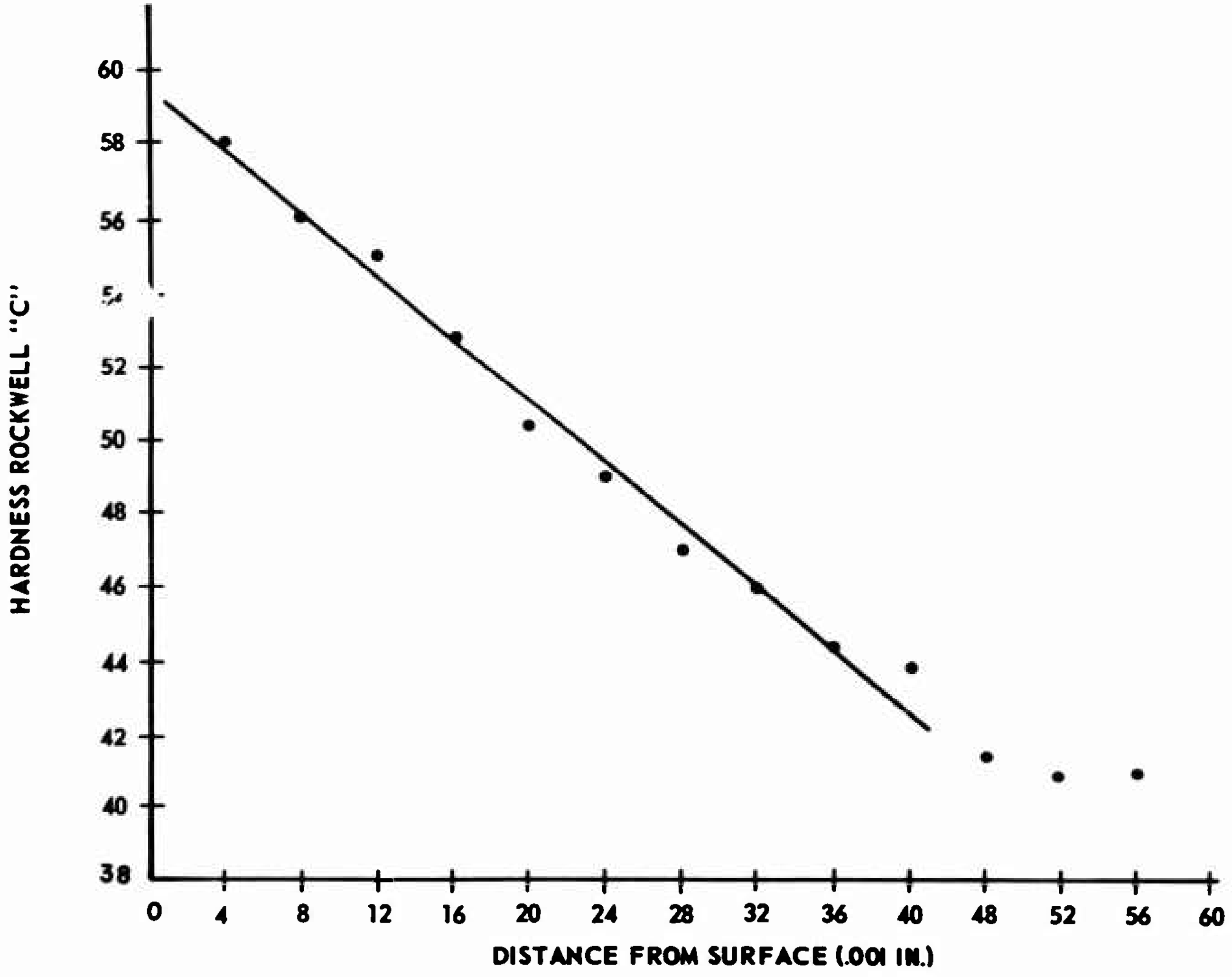

Figure 17. Microhardness Traverse of Tooth 13 of Gear 4N (Gear Forged with Integral Teeth).

0.002 inch below the surface. These hardnesses were quite consistent from tooth-to-tooth, ranging in value from R_c 58 to R_c 61. Several plots were made to compare the fatigue results with surface hardness, hardness gradient data, etc., in an attempt to correlate the slight variation in these metallurgical properties with the fatigue results of the gear teeth. No trends or correlation could be developed with these parameters, and it was concluded that these slight variations in surface hardness, case depth, etc., were not the cause of either the low fatigue properties with Set 2 or the wide scatter in the fatigue data for Set 4. This is quite reasonable to expect since all the gears were made of the same material except Set 4, which was air-melt 9310 instead of vacuum-melt 9310 steel. Also, all the gears were heat treated identically in the same atmosphere and furnaces at the same times. Forging has very little effect on the resultant metallurgical properties after heat treatment, and except for grain flow, all the gears were considered to be identical within manufacturing limitations from a metallurgical standpoint.

Microstructure

Several fractured teeth and adjacent root areas were sectioned, polished, and etched to reveal the microstructure. Figure 18 shows a photomicrograph of the microstructure of each of the four gear sets. As can be seen from Figure 18, the microstructure of the four different gear sets is, for the most part, identical. The case consists of a high carbon martensite, decreasing in carbon percentage until the martensite plus bainite core is reached. There are no massive carbides present in the case, and the retained austenite at the surface was approximately 2 to 6 percent as measured visually. No correlation between the amount of retained austenite and fatigue results was obtained when the number of cycles to failure was plotted against the percent of retained austenite.

Grain size was measured on the surface of the root area adjacent to the fatigue fracture using a modified McQuaid-Ehn (7) test in which sections of the carburized gears were packed in peach pits and heated to 1700°F for 1 hour. The sections were slow cooled from 1700° to 1000°F at a rate of approximately 60°F per hour and then held at 1000°F for 20 hours. These tests were performed in order to determine if the forging of the gears with integral teeth and also the forging of the simple upsets resulted in any change of the initial bar stock grain sizes of ASTM 6 through 8. No change was found, as most of the surfaces examined had a grain size of ASTM 7. Figure 19 shows the grain size of a sample of the four various sets of gears.

One gear tooth that did not clean up in the root area from the forged condition was polished for microscopic examination. It was felt that carbonization in this area may have been hindered by the iron oxide scale present. Provided that this occurred, the case directly below the scale area would be low in carbon content, and the hardness and beneficial residual compressive stresses normally found in a hardened case would not be present at this point. Removal of the scale during finish grinding could still leave a low carbon area at the tooth root. However, microscopic examination

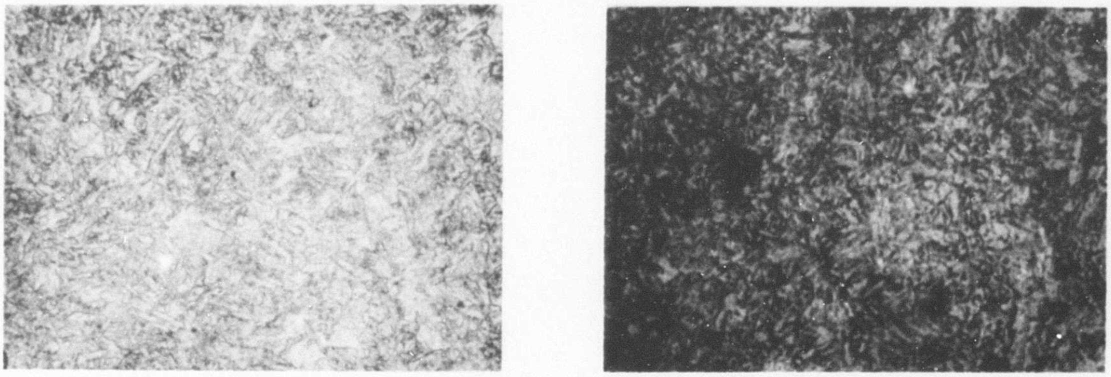

Gear 2N Core

Gear 4L Core

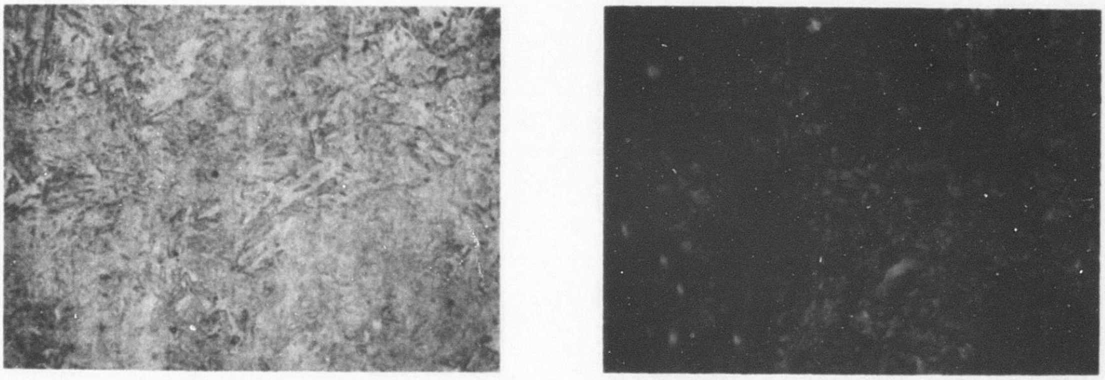

Gear 6P Core

Gear 8J Core

Figure 18. Microstructure of the Four Sets of Gears Tested (X 445).

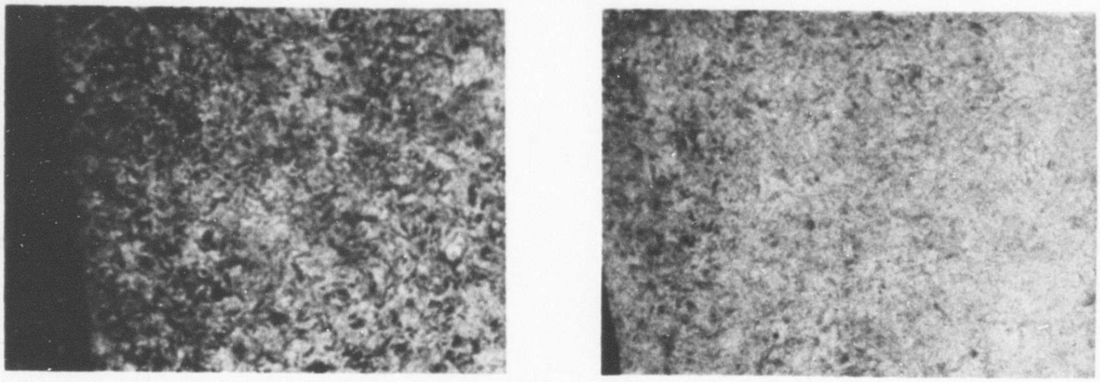

Gear 2N Case

Gear 4I Case

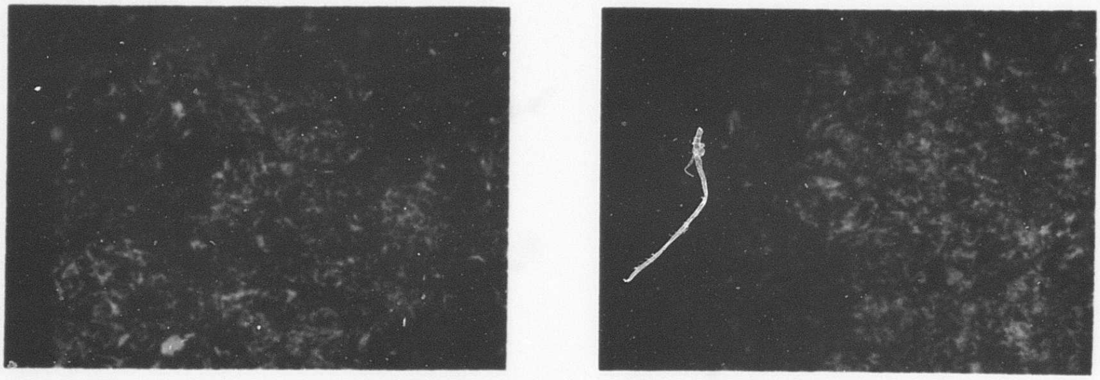

Gear 6P Case

Gear 8J Case

Figure 18. Continued.

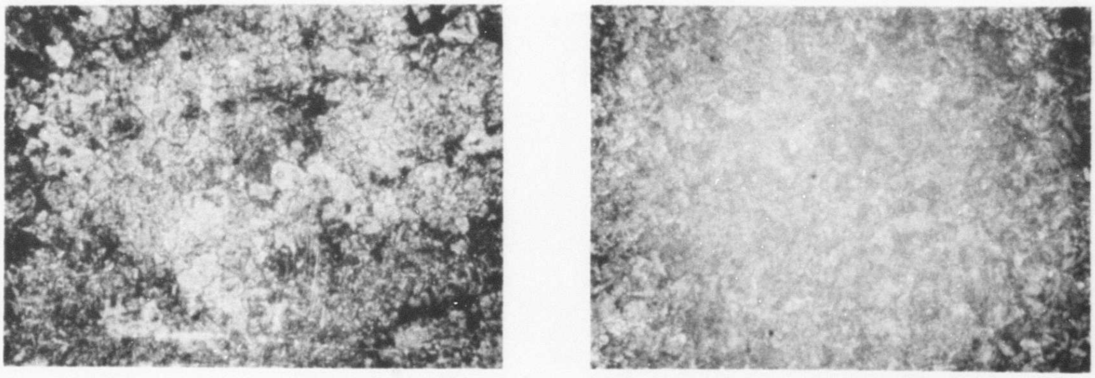

Gear 20

Gear 4L

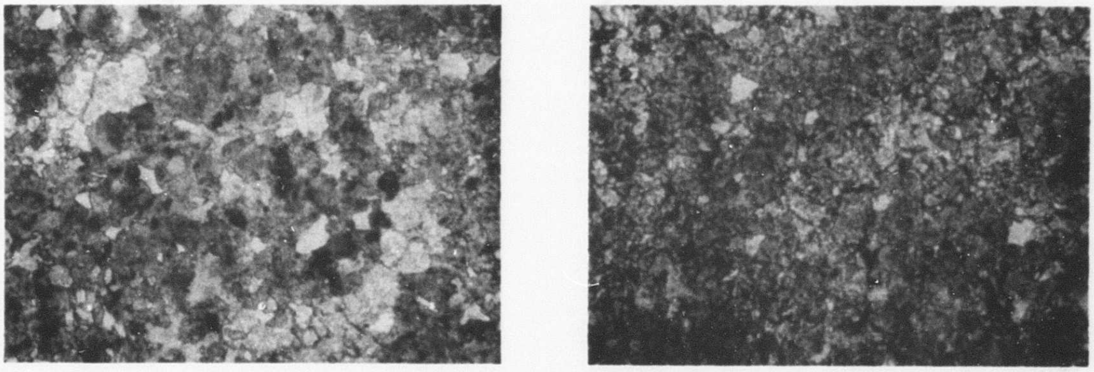

Gear 60

Gear 8N

Figure 19. Grain Size of the Four Sets of Gears (X 175).

(X 100) of the mounted and polished gear tooth did not show any evidence of carbon depletion in the scale area. Also, the hardness directly under this area (.002 inch below the surface) was identical to those values where no scale was present during carburizing. Hence, it was concluded that the existence of small scale areas during carburizing was not a contributing factor to the low fatigue results experienced for some of the gears.

Grain Flow Analysis

An extensive investigation was carried out in an attempt to measure the amount and direction of the grain flow around the root area of the forged gears. More than 40 sections were polished and etched using either a 10 percent aqueous solution of ammonium persulphate or a solution containing 1.5 gm $CuCl_2$, 30 cc HCl, and 30 cc methanol in 95 cc of water. Generally, the compact grain flow was quite symmetrical with respect to the root of each tooth, with the maximum depth of grain flow being approximately 0.030 inch at the root center. The amount of this pronounced grain flow decreased at the root fillet to approximately .010/.015 inch with the flank of the tooth having only about .005 inch. Figure 20 shows grain flow around the roots of both the Set 2 and Set 4 gears. As can be seen from these photographs at 22 magnification, the grain flow is quite similar from root to root; this was generally the case for all the other 40 roots examined, in that there appeared to be very little difference in the amount or direction of grain flow. This was found to be true for several cross sections taken perpendicular to the gear axis at various distances below the gear face. Figure 20 also shows some banding present in the tooth area. Banding is the result of the plastic deformation of regions in which slight alloy segregation has occurred. These regions are subsequently deformed in the direction of working into elongated regions or bands. Hence, the bands in the tooth indicate that the steel has been deformed in the direction shown in Figure 20, and banding itself is a measure of grain flow. However, the grain flow at the root is much more concentrated in nature and, since it is directly at the region of maximum bending stress in a gear tooth, it is the more important of the two types.

Many gear roots, including both those which had undergone fatigue failure and those which had not, were examined for grain flow under the microscope in an attempt to measure quantitatively the amount of grain flow at the center of the root fillet in the direction of the fatigue fracture. As can be seen from Figure 20, it is extremely difficult to determine exactly where the concentrated grain flow stops and the banding begins. Most of these roots examined had grain flow for a distance of .010 inch, with some as high as .015 inch and some as low as .0007 inch. Attempts to correlate the low amount of grain flow with low fatigue results and the large amount of grain flow with high number of cycles failed, as some teeth with low grain flow had higher numbers of cycles than those with high grain flow and vice versa. It was concluded that the slight variation in grain flow, as measured under the microscope, had little to do with the wide range of fatigue properties of the forged gears.

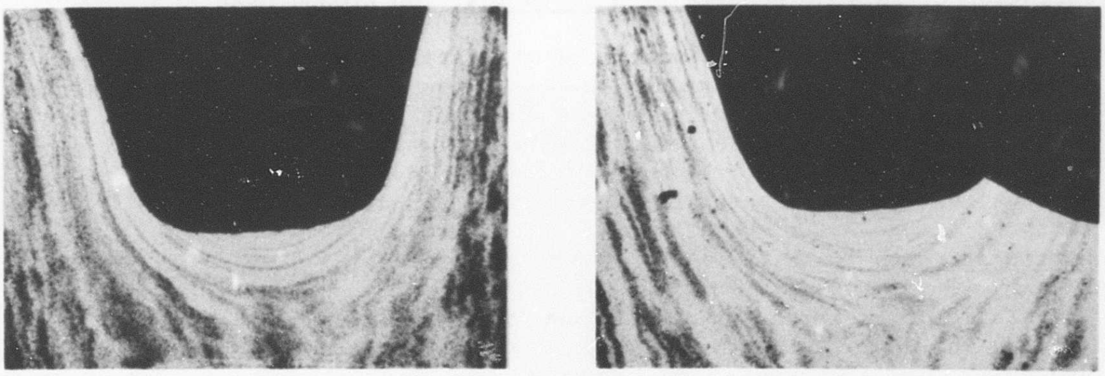

Teeth 4L 28/29 Teeth 20 29/30

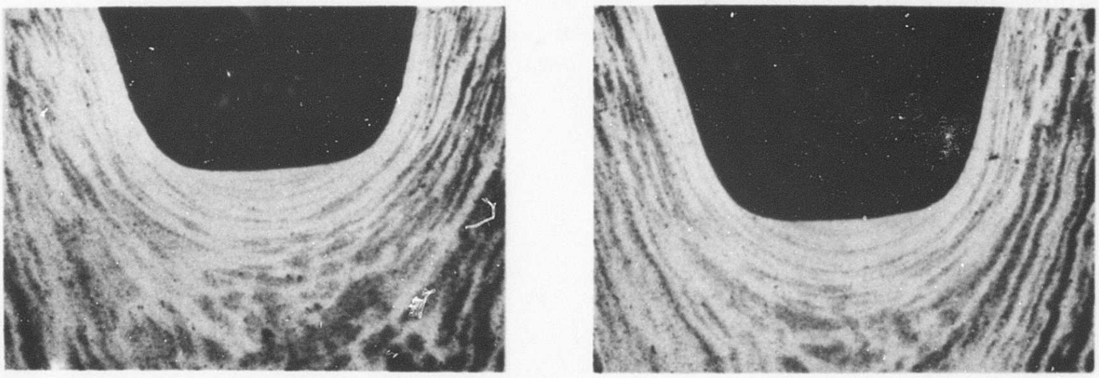

Teeth 20 22/23 Teeth 4L 36/37

Figure 20. Grain Flow Around Root (X 22).

Variation of Fatigue Results with Tooth Position Around Gear

In order to determine any symmetry of the fatigue results of the forged gears with tooth position around the gear, the number of cycles to failure was plotted using polar coordinates. This analysis was used to evaluate whether or not some forging or machining variable resulted in weaker teeth on one side of the gear. In most instances, asymmetry in high or low fatigue results with tooth position was not found.

Static-Strength Tests

The static or breaking strength of several gear teeth was determined by loading the gear teeth statically in the single-tooth tester using a manual hydraulic loading device. The hydraulic pressure as read from a pressure gage was recorded at tooth fracture, and the pressure converted to static strength.

The average breaking strength of all the gears tested is approximately 5040 pounds, with the average of the bar stock and upset forged gears being 5190 and 5060 pounds, respectively, and the forged gears with integral teeth forged from vacuum-melt and air-melt being 5080 and 4840 pounds, respectively. The experimental error in reading the pressure gage was estimated to be approximately 50 psi or 73 pounds load; hence, the variation in breaking load between gear sets is only approximately 2 percent. Thus, the breaking strength of the different types of gears can be considered to be identical, and no correlation can be drawn between the fatigue life and breaking strength of the gears tested.

CONCLUSIONS

1. The fatigue properties of gears forged with integral teeth were found to be substantially higher than those of gears which were machined from either bar stock or simple upset (pancake) forgings. The average cycles to failure for the gears forged with integral teeth was more than seven times the average cycles to failure for the machined gears, although there was much more scatter in the forged gear fatigue data.

2. Parameters such as case depth, surface hardness, grain size, grain flow, and static strength were found to be quite similar for all the types of gears investigated. No correlation between the slight variation in these parameters and fatigue life was found.

3. The wear properties of carburized 9310 gears forged with integral teeth, machined from upset forgings, and machined from bar stock were found to be very similar. Also, no difference in wear was found between gears forged with integral teeth from vacuum-melt 9310 and air-melt 9310 carburized steel.

4. Continued investigation is necessary to define process variables on the life of the forged gears.

BIBLIOGRAPHY

1. Cummings, H. N., et al., "Investigation of Material Fatigue Problems", *WADC Technical Report 56-611*, March 1957, p. 22.

2. Fisher, J. I., et al., "The Effect of Metallurgical Variables on the Fatigue Properties of AISI 4340 Steel Heat Treated in the Tensile Strength Range 260,000 - 310,000 psi", *ASTIA Doc. No. 208-321*, February 1959.

3. Nudelman, H. D., and Sheehan, J. P., "Study of the Effect of Melting Practice on the Fatigue Behavior of High-Strength Steel", *ASD Technical Report 61-296*, November 1961.

4. *Analysis of Service Failures*, Republic Alloy Steel Co., p. 46.

5. Templin, R. L., et al., "Fatigue Considerations Resulting from Processing", *ASME Handbook*, Second Edition, McGraw-Hill, New York, 1965, p. 249.

6. Parkinson, F. L., "Final Report on High Energy Rate Forging Development", *Technical Report AFML-TR-64-371*, November 1964.

7. *American Society for Metals Handbook*, 1948 Edition, ASM, Metal Park, Ohio, p. 407.

APPENDIX I
FORGING BLUEPRINTS FOR GEARS FORGED WITH INTEGRAL TEETH

SPUR GEAR DATA

AGMA QUALITY NUMBER	—
NO. OF TEETH	42
DIAMETRAL PITCH	14
PITCH DIA. (THEO.)	3.0000
PRESSURE ANGLE	20°
WHOLE DEPTH	—
CIR. TOOTH THICKNESS (REF.)	—
CHORDAL ADDENDUM	—
FIN. CHORDAL THICKNESS (REF.)	—
BASE CIRCLE DIA.	2.819
MEASUREMENT OVER BETWEEN TWO .120 DIA. PINS	3.185 3.176
TOOTH SURFACE FINISH	—
CENTER DISTANCE	4.000
BACKLASH WITH MATE	—
START OF ACTIVE PROFILE	—
ROLL ANGLE	—
NO. OF TEETH IN MATE:	70
RATIO	—
MATE PART NO.	—

CALC.
CHECK
DATE

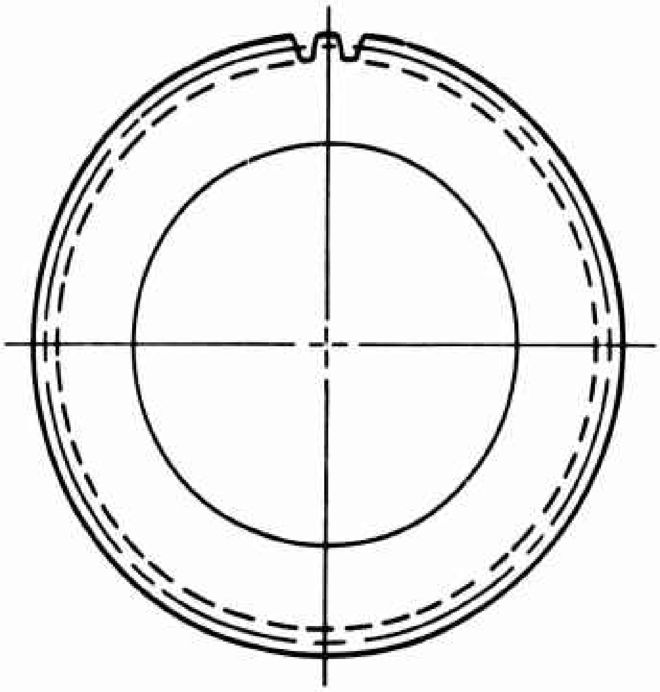

.25 R. T

A

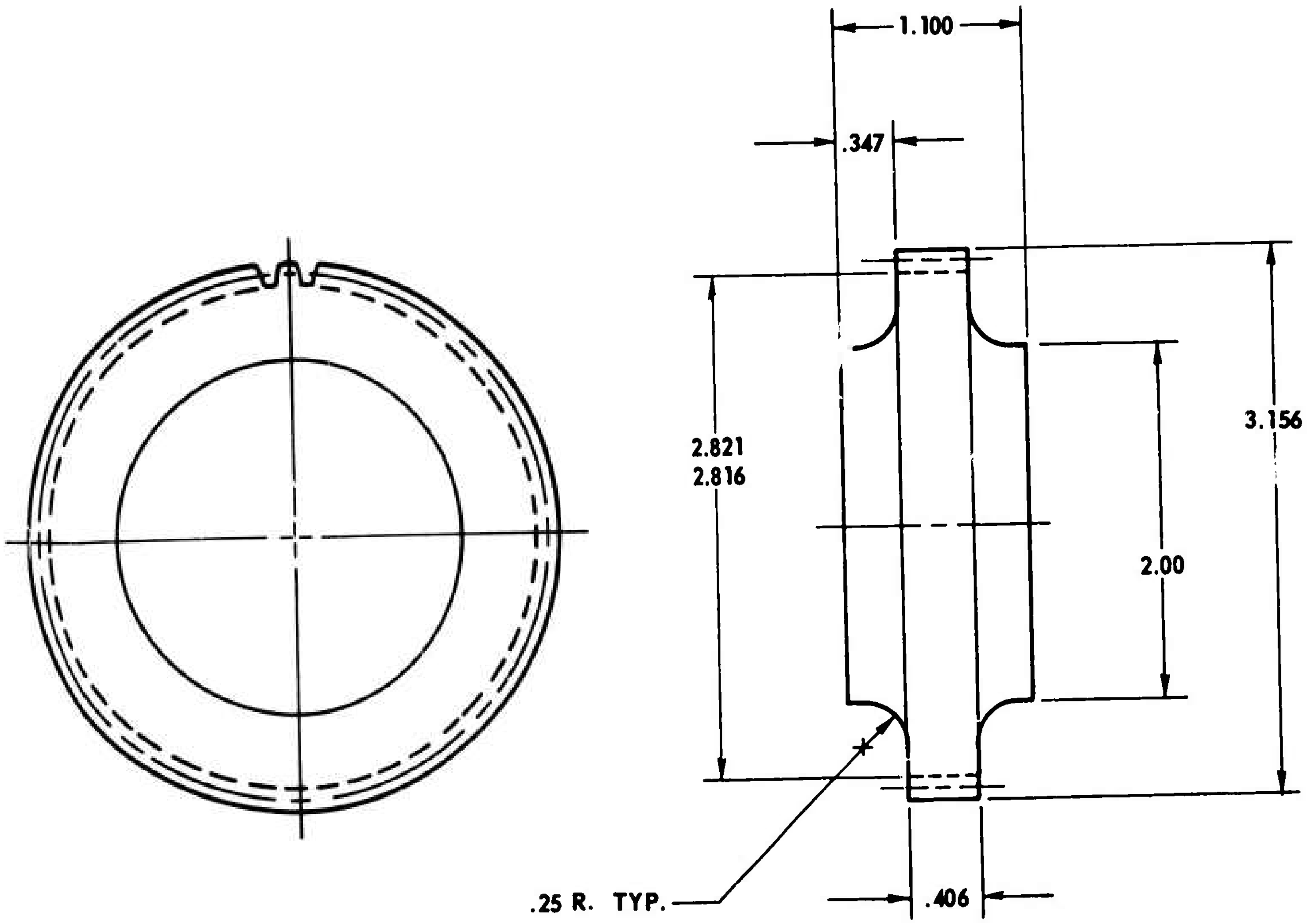

FORGING, TEST PINION

SPUR GEAR DATA	
AGMA QUALITY NUMBER	———
NO. OF TEETH	70
DIAMETRAL PITCH	14
PITCH DIA. (THEO.)	5.0000
PRESSURE ANGLE	20°
WHOLE DEPTH	———
CIR. TOOTH THICKNESS (REF.)	———
CHORDAL ADDENDUM	———
FIN. CHORDAL THICKNESS (REF.)	———
BASE CIRCLE DIA.	4.698
MEASUREMENT OVER BETWEEN TWO .120 DIA. PINS	5.186 5.177
TOOTH SURFACE FINISH	———
CENTER DISTANCE	———
BACKLASH WITH MATE	———
START OF ACTIVE PROFILE	———
ROLL ANGLE	———
NO. OF TEETH IN MATE:	42
RATIO	———
MATE PART NO.	———

CALC.	CHECK	DATE

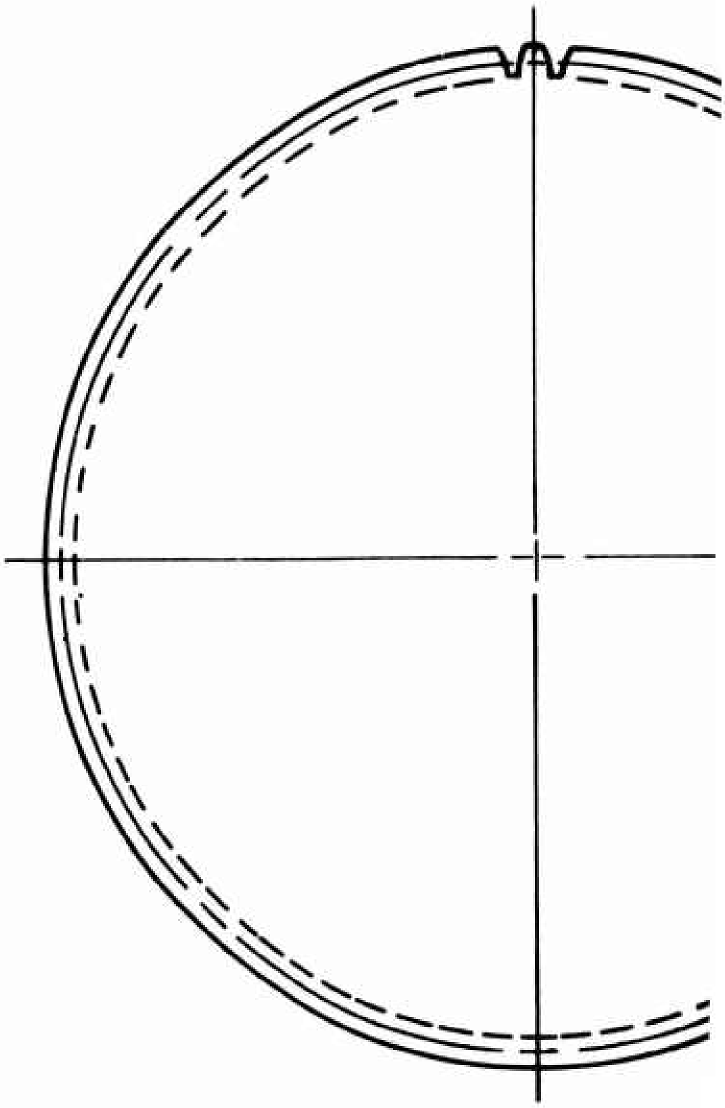

A

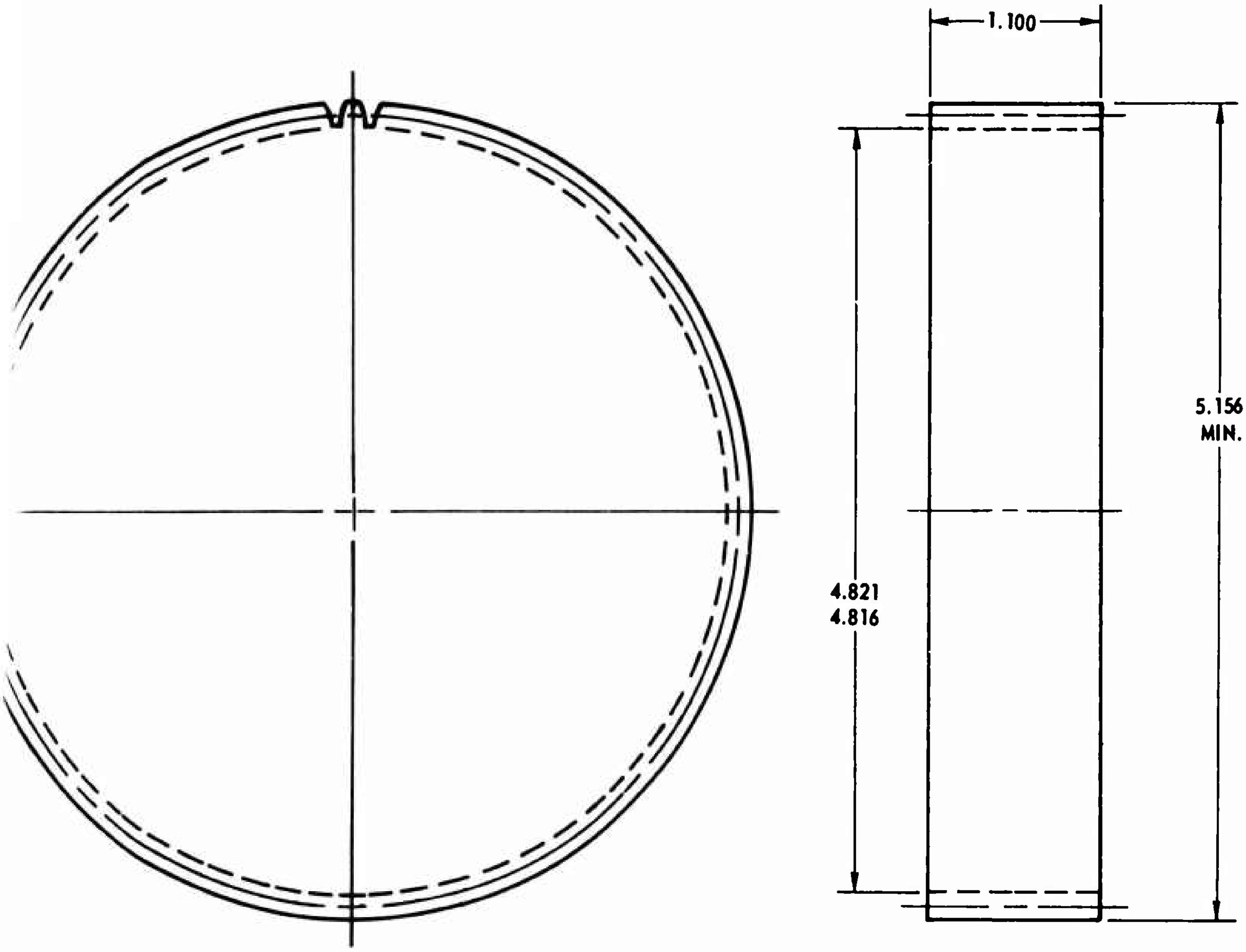

FORGING, TEST GEAR

B

APPENDIX II

FINISHED DIMENSIONS FOR 3-INCH-DIAMETER PINION AND 5-INCH-DIAMETER GEAR

SPUR GEAR DATA	
AGMA QUALITY NUMBER	12
NO. OF TEETH	42
DIAMETRAL PITCH	14
PITCH DIA. (THEO.)	3.0000
PRESSURE ANGLE	20°
WHOLE DEPTH	.1541
CIR. TOOTH THICKNESS (REF.)	.1122
CHORDAL ADDENDUM	———
FIN. CHORDAL THICKNESS (REF.)	———
BASE CIRCLE DIA.	2.8190778
MEASUREMENT OVER BETWEEN TWO .120 DIA. PINS	3.1631 3.1606
TOOTH SURFACE FINISH	16
CENTER DISTANCE	4.000
BACKLASH WITH MATE	.003 / .005
START OF ACTIVE PROFILE	———
ROLL ANGLE	———
NO. OF TEETH IN MATE:	70
RATIO	1.6667
MATE PART NO.	6552D4
CALC. CVI	CHECK DATE

SYM	ZONE	
A	C-1	ADDED 1/3
A	NOTES	ADDED CAR
A	B-2	373/3.76 W
R	D-4	CHANGED P BEST USE O ADDED PRE

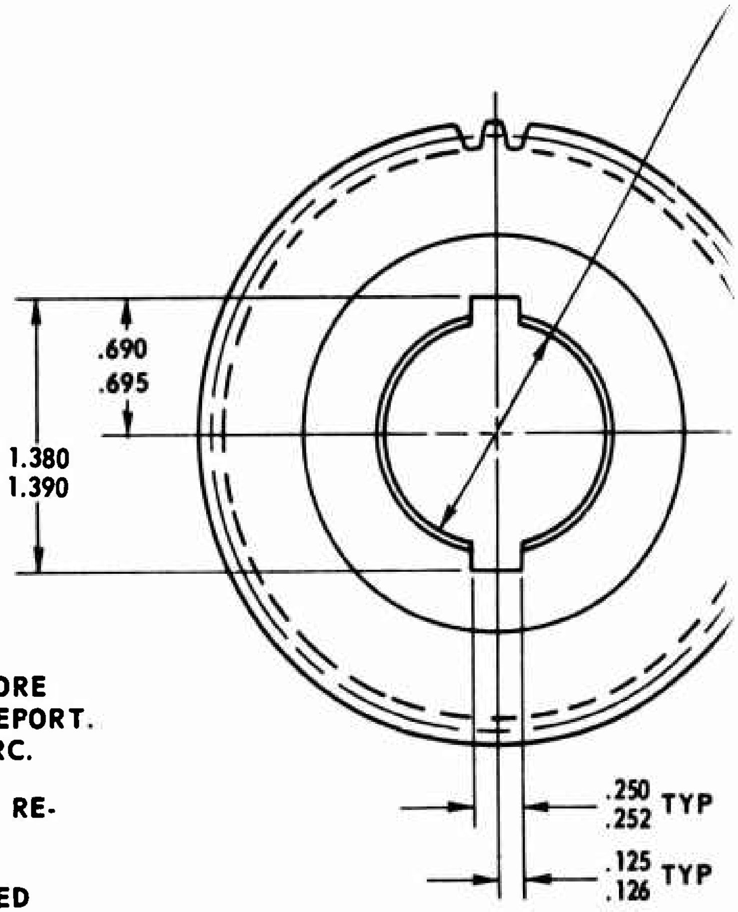

NOTES:

1. SERIAL NO.S MUST BE RETAINED THROUGHOUT ENTIRE PROCESSING INCLUDING OVERAGE.
2. RECORD PIN MEASUREMENTS OF FORGED TEETH BY SERIAL NO. BEFORE PROCESSING. DELIVER RECORDS TO RESEARCH FOR INCLUSION IN REPORT.
3. CARBURIZE ALL SURFACES .040 DEEP, CASE 59 - 62 RC, CORE 34 - 38 RC. DELIVER HEAT-TREAT RECORD TO RESEARCH.
4. DELIVER SERIALIZED RED-LINE, INVOLUTE, AND SPACING CHARTS TO RESEARCH.
5. FACES TO BE SQUARE WITH BORE WITHIN .0002 PER INCH, T.I.R.
6. TO INSURE CONSISTENT PROCESSING, ALL GEARS MUST BE CARBURIZED AT THE SAME TIME.

A

REVISIONS				
SYM	ZONE	DESCRIPTION	DATE	APPROVED
A A A	C-1 NOTES B-2	ADDED 1/32 X 45° CHAMFER ADDED CARBURIZE ALL SURFACES 373/3.76 WAS .375	9-7-65 9-7-65 9-7-65	F. Parkinson
R	D-4	CHANGED PIN MEASUREMENTS TO PERMIT BEST USE OF FORGED GRAIN FLOW. ADDED PRECARBURIZE PIN DIMENSIONS	10-4-65	F. Parkinson

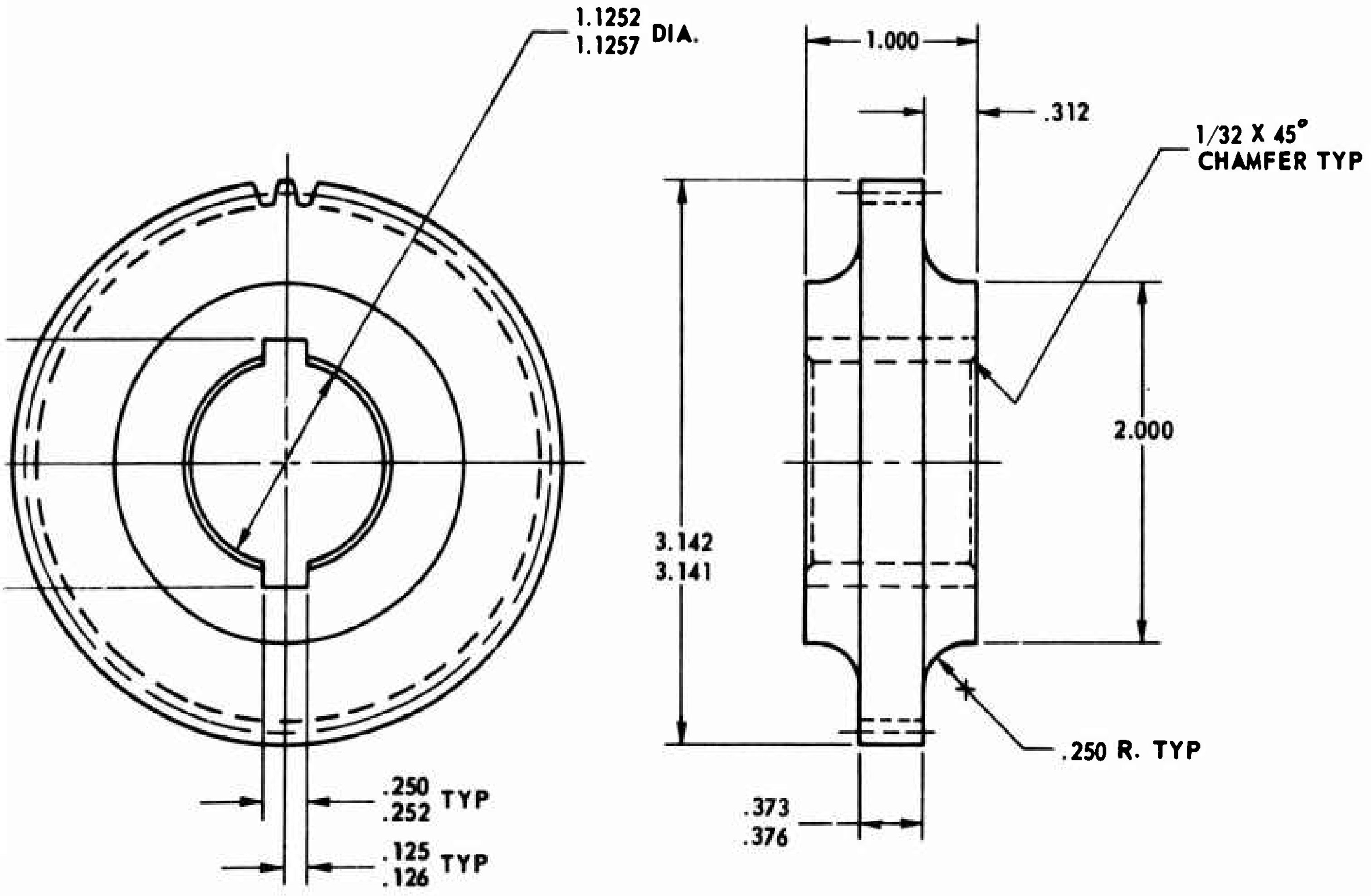

TEST PINION

B

REVISIONS

SYM	ZONE	DESCRIPTION	DATE	APPROVED
A	B-1 NOTES	ADDED 1/32 X 45° CHAMFER ADDED CARBURIZE ALL SURFACES	9-7-65 9-7-65	
B	D-4	CHANGED PIN MEASUREMENT TO ALLOW ALL BACKLASH THIS MATING MEMBER. ADDED PRECARBURIZE PIN DIMENSIONS	10-4-65	

SPUR GEAR DATA

AGMA QUALITY NUMBER	12
NO. OF TEETH	70
DIAMETRAL PITCH	14
PITCH DIA. (THEO.)	5.0000
PRESSURE ANGLE	20°
WHOLE DEPTH	.1541
CIR. TOOTH THICKNESS (REF.)	.1122
CHORDAL ADDENDUM	———
FIN. CHORDAL THICKNESS (REF.)	———
BASE CIRCLE DIA.	4.698
MEASUREMENT OVER BETWEEN TWO .120 DIA. PINS	5.1483 5.1457
TOOTH SURFACE FINISH	16
CENTER DISTANCE	4.000
BACKLASH WITH MATE	.003/.005
START OF ACTIVE PROFILE	———
ROLL ANGLE	———
NO. OF TEETH IN MATE:	42
RATIO	.6000
MATE PART NO.	6553D3

CALC. CVI CHECK DATE

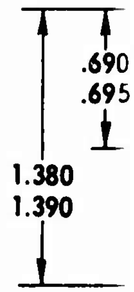

NOTES:

1. SERIAL NO.S MUST BE RETAINED THROUGHOUT ENTIRE PROCESSING INCLUDING OVERAGE.
2. RECORD PIN MEASUREMENTS OF FORGED TEETH BY SERIAL NO. BEFORE PROCESSING. DELIVER RECORDS TO RESEARCH FOR INCLUSION IN REPORT.
3. CARBURIZE ALL SURFACES .040 DEEP, CASE 59 - 62 RC, CORE 34 - 38 RC. DELIVER HEAT-TREAT RECORDS TO RESEARCH.
4. DELIVER SERIALIZED RED-LINE, INVOLUTE AND SPACING CHARTS TO RESEARCH.
5. FACES TO BE SQUARE WITH BORE WITHIN .0002 PER INCH T.I.R.
6. TO INSURE CONSISTENT PROCESSING, ALL GEARS MUST BE CARBURIZED AT THE SAME TIME.

A

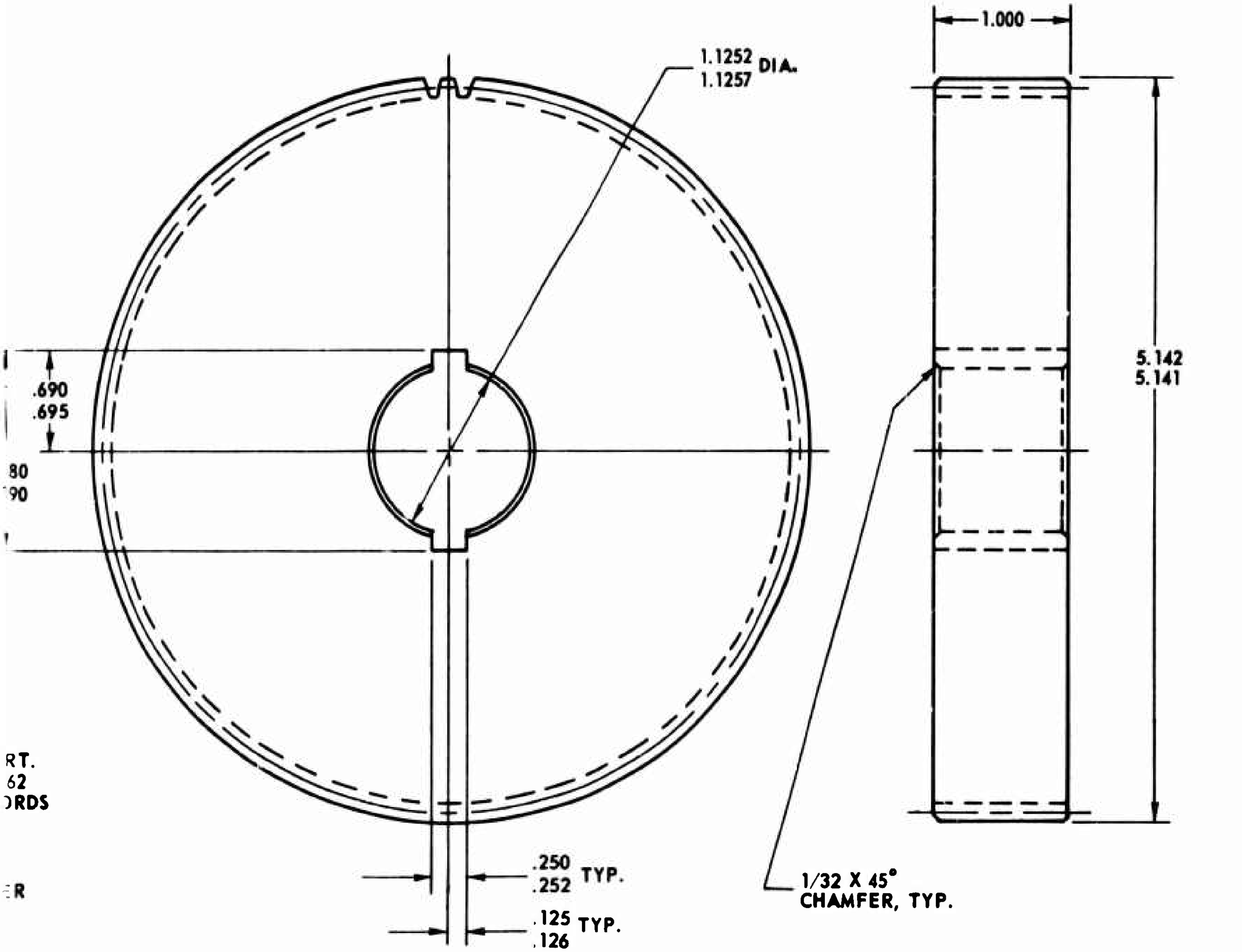
1.000
1.1252 DIA.
1.1257
5.142
5.141
.690
.695
80
90
RT.
62
RDS
ER
.250 TYP.
.252
.125 TYP.
.126
1/32 X 45°
CHAMFER, TYP.

TEST GEAR

APPENDIX III
PARTICLE SIZE ANALYSIS OF WEAR PARTICLES

FIELD CERTIFICATION

CUSTOMER *WESTERN GEAR*

DATE *4/13/66*

SYSTEM

LAB REPORT NO. 6091

SYSTEM NO.

SPECIFICATIONS

TYPE OF SAMPLE Hydraulic

MILLIPORE COUNT

RANGE

Over 10 Microns--------20% of surface area	
Under 10 Microns------80% of surface area	

TOTAL SOLIDS *NA*

TOTAL N.V.R. *NA*

INFRARED SPECTROPHOTOMETER *NA*

DEW POINT *NA*

BLACK LIGHT *NA*

WHITE LIGHT *NA*

WIPE TEST *NA*

NOTE: Sample was diluted with freon 10 to 1, and the pad was still too heavily contaminated to make an accurate particle count. We noted random nonmetallic fiber in the 250 micron range.

The above system has been tested and cleaned in accordance with the above specifications.

INSPECTION WITNESS

ASTRO-PAK INSPECTOR

FIELD CERTIFICATION

CUSTOMER WESTERN GEAR

DATE 4/13/66

SYSTEM

LAB REPORT NO. 5971

SYSTEM NO.

SPECIFICATIONS

TYPE OF SAMPLE Hydraulic

MILLIPORE COUNT

RANGE

Over 10 Microns-------20% of surface area	
Under 10 Microns------80% of surface area	

TOTAL SOLIDS NA

TOTAL N.V.R. NA

INFRARED SPECTROPHOTOMETER NA

DEW POINT NA

BLACK LIGHT NA

WHITE LIGHT NA

WIPE TEST NA

NOTE: Sample was diluted with freon 10 to 1, and the pad was still too heavily contaminated to make an accurate particle count. We noted random nonmetallic fiber in the 250 micron range.

The above system has been tested and cleaned in accordance with the above specifications.

INSPECTION WITNESS

ASTRO-PAK INSPECTOR

FIELD CERTIFICATION

CUSTOMER *WESTERN GEAR*

DATE *4/13/66*

SYSTEM

LAB REPORT NO. 5986

SYSTEM NO.

SPECIFICATIONS

TYPE OF SAMPLE Hydraulic

MILLIPORE COUNT

RANGE

Over 10 Microns-------20% of surface area	
Under 10 Microns------80% of surface area	

TOTAL SOLIDS *NA*

TOTAL N.V.R. *NA*

INFRARED SPECTROPHOTOMETER *NA*

DEW POINT *NA*

BLACK LIGHT *NA*

WHITE LIGHT *NA*

WIPE TEST *NA*

NOTE: Sample was diluted with freon 10 to 1, and the pad was still too heavily contaminated to make an accurate particle count. We noted random nonmetallic fiber in the 250 micron range.

The above system has been tested and cleaned in accordance with the above specifications.

INSPECTION WITNESS

ASTRO-PAK INSPECTOR

APPENDIX IV
ELECTRODE DRAWING FORGING DIE WITH FULL ROOT RADIUS

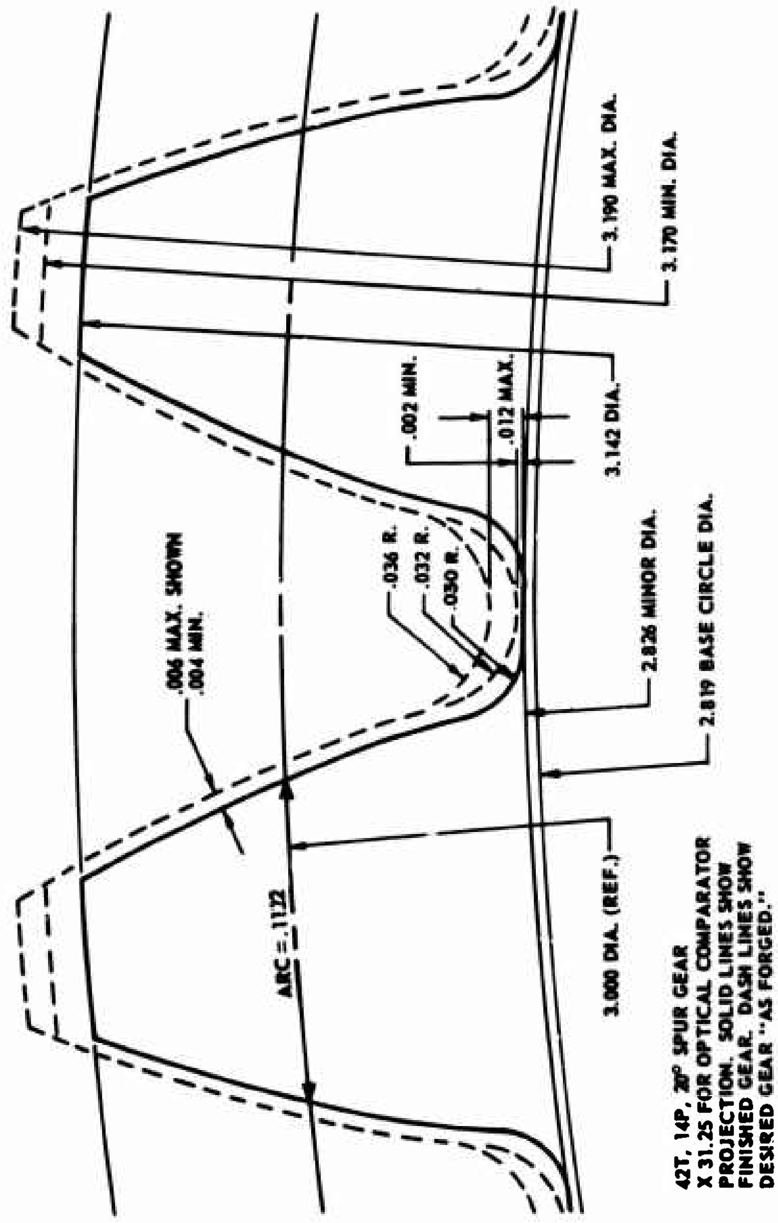

42T, 14P, 20° SPUR GEAR
X 31.25 FOR OPTICAL COMPARATOR
PROJECTION. SOLID LINES SHOW
FINISHED GEAR. DASH LINES SHOW
DESIRED GEAR "AS FORGED."

APPENDIX V
STUDENTS "t" STATISTICAL ANALYSIS OF FATIGUE DATA

The Students "t" test* is a useful statistical analysis to compare the mean values of two random normally distributed universes. For a given probability or confidence level (i.e., 95 percent), one can use the "t" test to determine for this confidence level whether the mean values of two sets of data are equal. For a given confidence limit, the mean value of one set of data (sample) will fall within the following range:

$$\bar{m} - \frac{ts}{\sqrt{n}} < \bar{m} < \bar{m} + \frac{ts}{\sqrt{n}} \qquad (2)$$

where

$\bar{m}$ = mean

s = standard deviation = $\left(\frac{\Sigma\ (\log\ (Ni - \bar{m}))^2}{n - 1}\right)^{\frac{1}{2}}$ (3)

n = number of data points for a set of data (sample)

Ni = value of the ith data point. i varies from i = 1.2...n

t = statistic "t". The value of "t" depends upon the confidence level chosen and the sample size.

Hence, if for a 95 percent confidence level, the mean of one sample (i.e., forged gears) has a range which does not overlap the range of the mean of another sample (i.e., bar stock gears), then the means of the two samples are not identical.

---

* W. J. Dixon and F. J. Massey, Introduction to Statistical Analysis, McGraw-Hill, New York, 1957, p. 121.

1. Forged Gears

Cycles (N)	Log N	Log N-m	$(\text{Log N-m})^2$
250,000	5.398	.224	.05018
250,000	5.398	.224	.05018
52,100	4.717	.457	.20885
250,000	5.398	.224	.05018
250,000	5.398	.224	.05018
250,000	5.398	.224	.05018
160,000	5.204	.030	.00090
1,911,000	6.282	1.108	1.22766
75,300	4.877	.297	.00821
31,000	4.491	.683	.46649
65,600	4.818	.356	.12674
73,400	4.866	.308	.09486
105,200	5.023	.151	.02280
	67.268		2.48741

$$m = \frac{67.268}{13} = 5.174 \qquad (4)$$

$$S = \left(\frac{\Sigma(\text{Log N-m})^2}{n - 1}\right)^{\frac{1}{2}} = \left(\frac{2.48741}{12}\right) = .4553 \qquad (5)$$

t for 95 percent confidence level for n - 1 of 12 = 2.179

$$\frac{ts}{\sqrt{n}} = \frac{(2.179)(.4553)}{3.600} = .276 \qquad (6)$$

for 95 percent confidence level $m - \frac{ts}{\sqrt{n}} < m < m + \frac{ts}{\sqrt{n}}$ (7)

95 percent confidence limits for log mean

$4.898 < 5.174 < 5.450$

95 percent confidence limits for mean

79,000 cycles < 149,000 cycles < 282,000 cycles.

2. Cut Gears

26,800	4.428
49,800	4.698
24,500	4.399
38,500	4.586
54,700	4.738
49,400	4.693
55,600	4.745
108,600	5.033
38,800	4.589
30,000	4.478
39,700	4.599
30,500	4.485
24,300	4.386
42,800	4.632
33,200	4.521
	69.010

$$m = \frac{69.010}{15} = 4.600 \tag{8}$$

$$S = \left(\frac{.39726}{14}\right)^{\frac{1}{2}} = .1683 \tag{9}$$

t for 95 percent confidence level for m - 1 of 14 - 2.145

$$\frac{ts}{\sqrt{n}} = \frac{(2.145)\,(.1683)}{3.87} = .093 \tag{10}$$

95 percent confidence limits for log mean
$4.507 < 4.600 < 4.693$

95 percent confidence limits for mean
$32{,}100 < 39{,}800 < 49{,}400$

Unclassified
Security Classification

DOCUMENT CONTROL DATA - R&D

(Security classification of title, body of abstract and indexing annotation must be entered when the overall report is classified)

1. ORIGINATING ACTIVITY *(Corporate author)*
Western Gear Corporation
Research Department
Lynwood, California

2a. REPORT SECURITY CLASSIFICATION
Unclassified

2b. GROUP

3. REPORT TITLE
Evaluation of High Energy Rate Forged Gears With Integral Teeth

4. DESCRIPTIVE NOTES *(Type of report and inclusive dates)*
Final Report

5. AUTHOR(S) *(Last name, first name, initial)*
Parkinson, Fred L.

6. REPORT DATE
March 1967

7a. TOTAL NO. OF PAGES
63

7b. NO. OF REFS
7

8a. CONTRACT OR GRANT NO.
DA 44-177-AMC-321(T)

b. PROJECT NO.
Task 1F125901A01410

c.

d.

9a. ORIGINATOR'S REPORT NUMBER(S)
USAAVLABS Technical Report 67-11

9b. OTHER REPORT NO(S) *(Any other numbers that may be assigned this report)*
Western Gear Report No. 664-241

10. AVAILABILITY/LIMITATION NOTICES
Distribution of this document is unlimited.

11. SUPPLEMENTARY NOTES

12. SPONSORING MILITARY ACTIVITY
U.S. Army Aviation Materiel Laboratories
Fort Eustis, Virginia

13. ABSTRACT

The fatigue properties of gears forged with integral teeth were compared with those of gears machined from bar stock and gears machined from simple upset forgings. The gears tested were manufactured from both air melt and vacuum-melt 9310 steel and tested on a single tooth fatigue testing machine at 175,000 and 157,000 psi Lewis bending stress. At both stress levels the gears forged with integral teeth had average fatigue lives approximately seven times that of the machined gears. More scatter was experienced in the fatigue data of the forged gears over that of the machined gears. However, statistical analysis by the Students "t" method shows that the low mean fatigue life of forged gears was twice as high as the high mean fatigue life of cut gears. Several metallurgical processing variables including case depth, surface hardness, grain size, and static strength were examined. No correlation between these parameters and the scatter in the fatigue data of the forged gears was found.

Neutron activation analysis was used to determine the relative wear of the four types of gears studied. Very little difference between the wear properties of the various gears investigated was observed, indicating that forging gears with integral teeth or machining gears from upset forgings does not change the wear properties over that of conventional gears machined from bar stock.

Unclassified
Security Classification

14. KEY WORDS	LINK A		LINK B		LINK C	
	ROLE	WT	ROLE	WT	ROLE	WT
Gears						
Gear Testing						
Metallurgy						
Gear Materials						
Gear Forging						
High Energy Rate Forging						
Radial Extrusion Forging						
Gear Wear						

INSTRUCTIONS

1. **ORIGINATING ACTIVITY:** Enter the name and address of the contractor, subcontractor, grantee, Department of Defense activity or other organization *(corporate author)* issuing the report.

2a. **REPORT SECURITY CLASSIFICATION:** Enter the overall security classification of the report. Indicate whether "Restricted Data" is included. Marking is to be in accordance with appropriate security regulations.

2b. **GROUP:** Automatic downgrading is specified in DoD Directive 5200.10 and Armed Forces Industrial Manual. Enter the group number. Also, when applicable, show that optional markings have been used for Group 3 and Group 4 as authorized.

3. **REPORT TITLE:** Enter the complete report title in all capital letters. Titles in all cases should be unclassified. If a meaningful title cannot be selected without classification, show title classification in all capitals in parenthesis immediately following the title.

4. **DESCRIPTIVE NOTES:** If appropriate, enter the type of report, e.g., interim, progress, summary, annual, or final. Give the inclusive dates when a specific reporting period is covered.

5. **AUTHOR(S):** Enter the name(s) of author(s) as shown on or in the report. Enter last name, first name, middle initial. If military, show rank and branch of service. The name of the principal author is an absolute minimum requirement.

6. **REPORT DATE:** Enter the date of the report as day, month, year; or month, year. If more than one date appears on the report, use date of publication.

7a. **TOTAL NUMBER OF PAGES:** The total page count should follow normal pagination procedures, i.e., enter the number of pages containing information.

7b. **NUMBER OF REFERENCES:** Enter the total number of references cited in the report.

8a. **CONTRACT OR GRANT NUMBER:** If appropriate, enter the applicable number of the contract or grant under which the report was written.

8b, 8c, & 8d. **PROJECT NUMBER:** Enter the appropriate military department identification, such as project number, subproject number, system numbers, task number, etc.

9a. **ORIGINATOR'S REPORT NUMBER(S):** Enter the official report number by which the document will be identified and controlled by the originating activity. This number must be unique to this report.

9b. **OTHER REPORT NUMBER(S):** If the report has been assigned any other report numbers *(either by the originator or by the sponsor)*, also enter this number(s).

10. **AVAILABILITY/LIMITATION NOTICES:** Enter any limitations on further dissemination of the report, other than those imposed by security classification, using standard statements such as:

(1) "Qualified requesters may obtain copies of this report from DDC."

(2) "Foreign announcement and dissemination of this report by DDC is not authorized."

(3) "U. S. Government agencies may obtain copies of this report directly from DDC. Other qualified DDC users shall request through
____."

(4) "U. S. military agencies may obtain copies of this report directly from DDC. Other qualified users shall request through
____."

(5) "All distribution of this report is controlled. Qualified DDC users shall request through
____."

If the report has been furnished to the Office of Technical Services, Department of Commerce, for sale to the public, indicate this fact and enter the price, if known.

11. **SUPPLEMENTARY NOTES:** Use for additional explanatory notes.

12. **SPONSORING MILITARY ACTIVITY:** Enter the name of the departmental project office or laboratory sponsoring *(paying for)* the research and development. Include address.

13. ABSTRACT: Enter an abstract giving a brief and factual summary of the document indicative of the report, even though it may also appear elsewhere in the body of the technical report. If additional space is required, a continuation sheet shall be attached.

It is highly desirable that the abstract of classified reports be unclassified. Each paragraph of the abstract shall end with an indication of the military security classification of the information in the paragraph, represented as *(TS), (S), (C), or (U)*.

There is no limitation on the length of the abstract. However, the suggested length is from 150 to 225 words.

14. KEY WORDS: Key words are technically meaningful terms or short phrases that characterize a report and may be used as index entries for cataloging the report. Key words must be selected so that no security classification is required. Identifiers, such as equipment model designation, trade name, military project code name, geographic location, may be used as key words but will be followed by an indication of technical context. The assignment of links, rules, and weights is optional.

Unclassified
Security Classification