AD NUMBER
AD446689
LIMITATION CHANGES
TO: **Approved for public release; distribution is unlimited.**
FROM: **Distribution authorized to U.S. Gov't. agencies and their contractors; Foreign Government Information; APR 1964. Other requests shall be referred to Canadian Embassy, 501 Pennsylvania Avenue, NW, Washington, DC 20001.**
AUTHORITY
NRC ltr dtd 7 Mar 1969

DISCLAIMER NOTICE

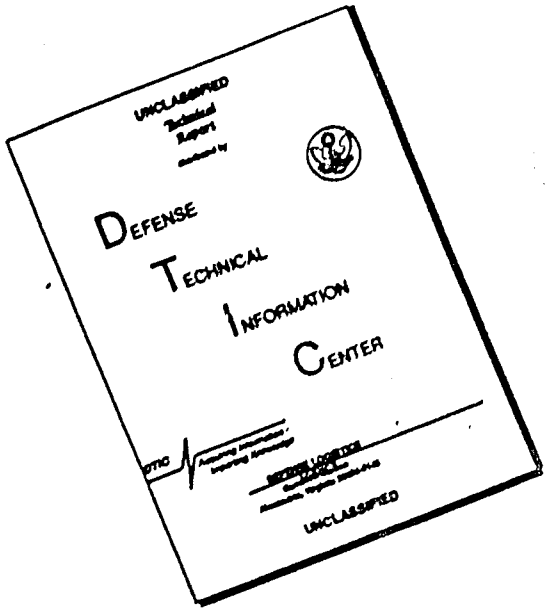

THIS DOCUMENT IS BEST QUALITY AVAILABLE. THE COPY FURNISHED TO DTIC CONTAINED A SIGNIFICANT NUMBER OF PAGES WHICH DO NOT REPRODUCE LEGIBLY.

NATIONAL RESEARCH COUNCIL OF CANADA

MECHANICAL ENGINEERING REPORT

MK - 12

SMOOTHING OF DIGITAL-TO-ANALOG CONVERTED DATA IN DIGITAL DATA SYSTEMS

BY

R. E. GAGNÉ

DIVISION OF MECHANICAL ENGINEERING

OTTAWA

APRIL 1964

N. R. C. NO. 8032

[redacted]

[redacted]

[redacted]

(5) National Research Council of Canada,
Div[redacted] of Mechanical Engineering, Ottawa (Ontario).

[redacted]

Pages - Preface	- 10	Report:	MK-12
Text	- 58	Date:	April 1964
App.	- 8	Lab. Order:	13449A
Figures	- 25	File:	M2-2 6-2

For: Internal

Subject: (6) SMOOTHING OF DIGITAL-TO-ANALOG CONVERTED DATA IN DIGITAL DATA SYSTEMS,

Submitted by: D.C. Baxter
Head
Analysis Section

(10) by [redacted] R.E. Gagné,

Approved by: D.C. MacPhail
Director

SUMMARY

A brief review of the properties of sampled signals is given, and used to describe systems which contain digital components. It is shown that the errors in such digital data systems are of two types, one due to the inaccuracies in the algorithm programmed, and the other due to the reconstruction process necessary to convert the digital data to analog form. The latter error only is discussed.

A number of realizable smoothing filters, which can be used to improve the reconstruction accuracy over that obtainable directly by conventional digital-to-analog converters, are presented. The frequency responses of these filters are compared with the ideal recovery filter. Also discussed is the percent root mean square reconstruction error when these filters are used to recover a sampled sinusoid.

Circuits are presented for the realization of these filters using standard analog computer components.

opc

TABLE OF CONTENTS

TABLE OF CONTENTS (Cont'd)

LIST OF ILLUSTRATIONS

LIST OF ILLUSTRATIONS (Cont'd)

LIST OF ILLUSTRATIONS (Cont'd)

LIST OF ILLUSTRATIONS (Cont'd)

LIST OF SYMBOLS

$\{c_n\}$, $\{r_n\}$, etc.	=	Denoting the sequences c_0, c_1, c_2, ..., c_n, ... etc.
$c(t)$, $r(t)$, etc.	=	Function of a continuous variable t (time)
$c^*(t)$, $r^*(t)$, etc.	=	Denoting a sampled signal
$c_I(t)$	=	Ideal recovery of the sampled signal $c^*(t)$
$c'(t)$	=	Prediction of $c(t)$
$d(t)$	=	Ideal system output
$e(t)$	=	Reconstruction error for a sampled sinusoid input
$\overline{e^2(t)}$	=	Mean value of $e^2(t)$
$\sqrt{\overline{e^2(t)}} \times 100\%$	=	Root mean square value of $e(t)$
$h(t)$	=	System impulse response
$H(s)$	=	System transfer function = $L\{h(t)\}$
$\lvert H(j\omega)\rvert = \lvert H(s)\rvert_{s=j\omega}$	=	System amplitude response
$\angle H(j\omega) = \angle H(s)/_{s=j\omega}$	=	System phase response
$H(z) = Z\{h(t)\}$	=	System pulse transfer function
$h_0(t)$	=	Impulse response, zero-order hold
$h_1(t)$	=	Impulse response, first-order extrapolator
$h_{1,s}(t)$	=	Impulse response, first-order smoothed extrapolator
$h_{1,d}(t)$	=	Impulse response, first-order delayed interpolator
$h_{1,I}(t)$	=	Impulse response, first-order ideal extrapolator
$h_2(t)$	=	Impulse response, second-order extrapolator

LIST OF SYMBOLS (Cont'd)

$h_{2,d}(t)$	=	Impulse response, second-order delayed interpolator
$h_{2,I}(t)$	=	Impulse response, second-order ideal extrapolator
$h_k(t)$	=	Impulse response, fractional-order hold
$h_{1,e}(t)$	=	Impulse response, first-order exponential filter
$h_{2,e}(t)$	=	Impulse response, second-order exponential filter
K, k	=	Variable constant, when appropriate
$L\{f(t)\}$	=	Laplace transform of $f(t) = F(s)$
n, i, j, k, etc.	=	Integers, when appropriate
p	=	Normalized intersample time variable, where $t = (n+p)T$, and $0 \leq p < 1$
s	=	Laplace complex frequency variable
T	=	Interval between samples, seconds
$u(t)$	=	Unit step at $t = 0$
$x = \frac{\omega T}{2} = \pi\left(\frac{\omega}{\omega_s}\right)$	=	Normalized frequency variable
Y	=	Samples/cycle $= \pi/x = \omega_s/\omega$
$z = e^{sT}$	=	z-transform complex variable
$Z\{f(t)\}$	=	z-transform of $f(t) = \sum_{n=0}^{\infty} f(nT)z^{-n} = F(z)$
$Z_m\{f(t)\}$	=	Modified z-transform of $f(t) = z^{-1} \sum_{n=0}^{\infty} f(n+m)T\, z^{-n} = F(z,m)$

LIST OF SYMBOLS (Cont'd)

$\delta(t)$	=	Unit impulse at $t = 0$
$\varepsilon(t)$	=	System performance error
$\varepsilon_c(t)$	=	System reconstruction error
$\varepsilon_d(t)$	=	System digital error
ζ	=	Damping of a second-order system
ω	=	Frequency, radians per second
ω_n	=	Undamped resonant frequency of a second-order system
$\omega_s = \frac{2\pi}{T}$	=	Sampling frequency, radians/second

SMOOTHING OF DIGITAL-TO-ANALOG CONVERTED DATA IN DIGITAL DATA SYSTEMS

1.0 INTRODUCTION

Over the past number of years a great deal of interest has been shown in the use of digital devices in situations which had previously been the exclusive domain of continuous or analog devices. The two most evident examples of this trend are the use of digital controllers for process control, and the invasion of the hallowed analog ground of system simulation by the digital computer. This trend has also resulted in a new dimension being added to the fields of computation and control by the combined use of analog and digital devices (hybrid computers) by assigning to each that portion of the task to which it is best suited. It is the resulting mixture of the two types of data in one system, i.e. digital data and continuous data, that defines the systems of interest here, and which are called sampled-data systems (see Ref. 1, 2, 3, 4, 5).

In general, a sampled-data system is defined as any system in which there appear signals which can be said to exist only at discrete instants of time. The interest in radar systems, in which data existed in the form of pulses, stimulated the theoretical study of sampled-data systems in the late 1940's, and by the middle 1950's a sound theory had been evolved for dealing with these pulsed-data systems. As digital computers became fast enough for use in real time situations, it was found that sampled-data theory could also be applied to the study of these digital-data systems after a suitable representation of digital data was defined.

Section 2 discusses this problem of representation of digital data, and indicates how the sampled-data theory, reviewed

in Sections 3.1 to 3.3, can be applied to the study of digital-data systems. This review of sampled-data theory also introduces, in Section 3.4, the data reconstruction problem, which is the main topic of this report. The section concludes with a technique for obtaining the digital (or pulse) transfer function for certain digital programs in the general situation when initial conditions may be present.

Section 4 presents an analysis of the sources of error in digital-data systems, and indicates that this error can be separated into two distinct components. The first component can be attributed to the numerical algorithm programmed, and the second component can be attributed to errors in the digital-to-analog reconstruction process.

Sections 5 and 6 present an analysis of various realizable reconstruction devices (filters) that can be used in the digital-to-analog recovery process, and show how they can be constructed from standard analog computer components. These filters are compared in two ways. First the frequency response characteristics of each is obtained. In the majority of cases this frequency response information was not previously available, and in all cases was not available in sufficient detail so that the comparisons of Section 7 could be made.

Section 8 presents a new comparison between the various filters, which is the root mean square recovery error when the filters receive a sampled sinusoid of a given frequency. This comparison is in a form which allows otherwise difficult design decisions to be made quite easily in situations where the root mean square error is a suitable error measure.

2.0 DIGITAL DATA SYSTEMS

A digital data system is here used to define a system in which signals that are number sequences appear. One can think of the signal as being that sequence of numbers that

appear at a given location in the digital device; the time history of the contents of this location define a number sequence which is related to the other number sequences at the other locations in the device.

Consider only those situations, illustrated in Figure 1(a), where the digital portion of the system is operating in real time; that is, there exists an "input" number sequence to the program, $\{r_n\}$, which is derived from some external real time signal, $r(t)$, by a sampling process. The purpose of the program is to cause an output time signal, $c(t)$, which is derived from the program "output" number sequence, $\{c_n\}$, when it is passed through suitable converters.

If the input sequence, $\{r_n\}$, is derived from the input signal, $r(t)$, there must be some data transducer to translate the input signal (voltage, current, force, etc.) to the numerical (coded) language of the digital computer. This data translation is done by some form of analog-to-digital conversion. This conversion may be the manual reading of dials and the subsequent entering of corresponding numbers by cards or on the computer typewriter, or may be a completely automatic, electronic analog-digital converter operated under program control.

Similarly some form of digital-to-analog conversion is required to generate the output, $c(t)$, from the sequence $\{c_n\}$.

Another property of digital devices which is of concern here is the existance of computation time. The digital computer is basically a serial device; that is, all operations performed by it must be programmed as a sequence of simple steps, and, although each step is performed very quickly, the whole computation may take an appreciable time. Since the inputing of $r(t)$ information and the outputing of the latest value of $\{c_n\}$ are steps in this program, the input and output sequences can only

be samples of their respective continuous signals, and no information about their behaviour is available between these sample times. Obviously the highest sampling rates obtainable will depend on the complexity of the program itself.

Now the input sequence can completely characterize the signal r(t), (provided round-off errors are not significant) if the sampling theorem, discussed in Section 3.3, is satisfied. The output time signal will, in general, correspond to the output sequence at the sample times (i.e. at the instant of a digital-to-analog conversion), and it must be the task of the conversion process to generate an intersample signal to yield an acceptable continuous output signal c(t). This generation of a continuous output from the output sequence is the topic of this report.

Consider, now, the problem of representation of number sequences. In the digital computer, the computation yielding the output sequence, $\{c_n\}$, from the input sequence, $\{r_n\}$, can usually be described by means of difference equations. Outside the computer, however, the r(t) and c(t) signals are best described by means of Laplace transform theory. There is an obvious need in these sampled-data systems for a complete description based entirely on one mathematical discipline. It is here that the concept of the impulse function is of service.

Consider first the representation of the data as it passes through the analog-to-digital converter at the input. This converter must perform two distinct functions; it must first sample the input signal, r(t), and it must then convert this sampled value to a digital number. Let these two functions be represented separately as shown in Figure 1(b), where the starred notation, $r^*(t)$, represents a sampled signal, and where the symbol for a periodically-operated switch is introduced.

Assume that the sampling switch has the following properties:

(a) it operates periodically, with period T seconds

(b) it remains closed, at the sample times, for an infinitely short time

(c) it has as an output an impulse of area equal to the value of the input at the sample instant.

That is,

$$r^*(t) = 0 \text{ for } t \neq nT \text{ for integers } n$$

$$= \infty \quad \text{at } t = nT$$

such that

$$\int_{nT-\varepsilon}^{nT+\varepsilon} r^*(t)dt = r(nT)$$

Applying similar arguments to the digital-analog converter of the output, there results an equivalent description of the digital data system of Figure 1(a), by that shown in Figure 1(c).

This figure suggests that, since the data transducers of the input and output are unity gain devices, the digital program can be described as that portion of the system which receives a sampled signal input, $r^*(t)$, and produces a sampled signal output, $c^*(t)$. Since the Laplace transforms of these sampled signals exist, the program can now be described as the ratio of these Laplace transforms, yielding a Laplace transfer function for the program, or a digital transfer function. Thus the digital-data system can be described as shown in Figure 1(d), where H(s) is the digital transfer function, and the output sampler emphasizes that $c^*(t)$ is a sampled signal.

By the use of this digital transfer function for the digital program, the complete description of a digital-data system can be based on Laplace transform theory.

3.0 THE SAMPLING PROCESS

3.1 The Ideal Sampler

It can be seen, with reference to Figure 1(c), that the Laplace transform description of digital-data systems can proceed based on the concept of an ideal sampling switch. To describe this ideal sampling switch in detail, consider the replacement of this switch by the amplitude modulator of Figure 2(a) (Ref. 1, p. 18).

Let the carrier be an impulse train $\delta_T(t)$ where

$$\delta_T(t) = \sum_{n=0}^{\infty} \delta(t-nT)$$

and where $\delta(t)$ is a unit impulse at $t = 0$. The output of the modulator is defined as the product

$$r^*(t) = \delta_T(t) \cdot r(t)$$

and it is seen that $r^*(t)$ becomes a sequence of impulses of area equal to the value of $r(t)$ at the positions of these impulses, as required.

Since $\delta_T(t) = 0$ for $t \neq nT$, then

$$r^*(t) = \left[\sum_{n=0}^{\infty} \delta(t-nT) \right] \cdot r(t)$$

$$= \sum_{n=0}^{\infty} r(t) \cdot \delta(t-nT)$$

$$= \sum_{n=0}^{\infty} r(nT)\delta(t-nT) \qquad (1)$$

and the character of $r^*(t)$ is exhibited.

Taking the Laplace transform of this sampled signal

$$R^*(s) = L\{r^*(t)\} = \sum_{n=0}^{\infty} r(nT) \int_0^{\infty} \delta(t-nT)e^{-st}dt$$

$$R^*(s) = \sum_{n=0}^{\infty} r(nT)e^{-snT} \qquad (2)$$

Thus, given $r(t)$, the Laplace transform of $r^*(t)$ can be obtained.

The so-called z-transform description of sampled

signals is obtained by introducing the notation

$$z = e^{sT} \tag{3}$$

then

$$R(z) = R^*(s)\Big/_{z=e^{sT}} = \sum_{n=0}^{\infty} r(nT)z^{-n} \tag{4}$$

Several tables exist (eg. Ref. 3, p. 56) which give the z-transform for the commonly occurring r(t) functions, or it can be evaluated directly from the above definition.

3.2 Frequency Content of Sampled Signals

Returning to the expression for the sampled signal $r^*(t)$, one can evaluate the Laplace transform of this signal directly by noting that the product of two time functions is equivalent to the complex convolution of their respective transforms (Ref. 6, p. 275), thus

$$R^*(s) = L\{r^*(t)\} = L\{r(t) \cdot \Delta_T(t)\} = \frac{1}{2\pi j} \int_{c-j\infty}^{c+j\infty} R(p)\, \Delta_T(s-p)dp.$$

Carrying out the indicated operation (Ref. 1, pp. 32-35), there results:

$$R^*(s) = \frac{1}{T} \sum_{k=-\infty}^{\infty} R\left(s + \frac{2\pi jk}{T}\right) + \frac{r(0^+)}{2} \tag{5}$$

This expression exhibits a most important property of sampled signals, that is, the creation of an infinite number

of sidebands of the shape of the original signal spectrum, $R(j\omega)$, these sidebands being centred at $\omega = k\left(\frac{2\pi}{T}\right)$ for $k = \pm 1, \pm 2, \pm 3$, etc. This is illustrated in Figure 2(b).

3.3 The Sampling Theorem

The Shannon sampling theorem (Ref. 1, p. 27) can be seen directly from Figure 2(b) by noting that the sidebands of a sampled signal, in this case $r^*(t)$, will not interact if $R(j\omega) = 0$ for all $\omega > \pi/T$. If these sidebands are non-interacting, then $R(j\omega)$ can be recovered from $R^*(j\omega)$ by an ideal low pass filter of bandwidth π/T.

The condition for non-interaction is that the highest non-zero signal component, of frequency ω, be such that

$$\omega \leq \pi/T$$

or $\frac{2\pi}{\tau} \leq \pi/T$ where τ is the period of this component

thus $$T \leq (\tau/2) \qquad (6)$$

Thus, if at least two samples per cycle of this highest frequency component are obtained, then $r(t)$ is recoverable from $r^*(t)$ by linear filtering. Equation (6) is the form in which the sampling theorem is usually stated.

Notice that the signal being sampled, $r(t)$, must contain no higher frequency components than that allowed by the sampling theorem. In particular, it must not contain any high frequency noise components, which, after the sampling, could introduce a low frequency noise due to the sideband effect (an effect known as aliasing). This emphasizes the fact that, in the sampling of noisy signals, some form of presample filtering is desirable (Ref. 7 and 8).

3.4 The Data Reconstruction Task

Again, the problem is evident from Figure 2(b). If the sampling theorem is satisfied, then the signal is recoverable from its samples by means of an ideal low pass filter, with characteristics as shown in Figure 3.

It is know, however, that this ideal recovery filter is non-realizable since the impulse response is non-zero for $t < 0$, and one is faced with the problem of approximating this ideal filter with some realizable filter.

This approximation problem is discussed in Sections 5 to 9, and is the main topic of this report.

3.5 Digital (or Pulse) Transfer Functions

One more point deserves attention here, and this is the evaluation of the Laplace transfer function H(s) of a class of linear digital programs (see also Ref. 2, pp. 70-72.).

In such programs the current member of the output sequence, c_n, is a linear combination of current and past values of the input, and past values of the output, i.e.,

$$c_n = a_c r_n + a_1 r_{n-1} + \dots + a_m r_{n-m} - b_1 c_{n-1} - b_2 c_{n-2} - \dots - b_k c_{n-k}$$

$$= \sum_{i=0}^{m} a_i r_{n-i} - \sum_{j=1}^{k} b_j c_{n-k} \qquad (7)$$

The sampled signal representation of the output will be

$$c^*(t) = \sum_{n=0}^{\infty} c_n \delta(t-nT) = \sum_{n=0}^{\infty} \left\{ \sum_{i=0}^{m} a_i r_{n-i} \delta(t-nT) - \sum_{j=1}^{k} b_j c_{n-k} \delta(t-nT) \right\}$$

$$= \sum_{i=0}^{m} a_i \sum_{n=0}^{\infty} r_{n-i} \delta(t-nT) - \sum_{j=1}^{k} b_j \sum_{n=0}^{\infty} c_{n-k} \delta(t-nT)$$

Taking the Laplace transform, and introducing the z-transform notation,

$$C(z) = L\{c^*(t)\}_{s=1/T \ln z} = \sum_{i=0}^{m} a_i \sum_{n=0}^{\infty} r_{n-i} z^{-n} - \sum_{j=1}^{k} b_j \sum_{n=0}^{\infty} c_{n-k} z^{-n} \qquad (8)$$

Consider

$$W = \sum_{i=0}^{m} a_i \sum_{n=0}^{\infty} r_{n-i} z^{-n}$$

$$= \sum_{i=0}^{m} a_i \left(r_{-i} + r_{-i+1} z^{-1} + \ldots + r_{-1} z^{-(i-1)} + \sum_{n=i}^{\infty} r_{n-i} z^{-n} \right)$$

$$= \sum_{i=0}^{m} a_i \left(r_{-i} + r_{-i+1} z^{-1} + \ldots + r_{-1} z^{-(i-1)} + z^{-i} \sum_{n=i}^{\infty} r_{n-i} z^{-(n-i)} \right)$$

$$= \sum_{i=0}^{m} a_i \left(r_{-i} + r_{-i+1} z^{-1} + \ldots + r_{-1} z^{-(i-1)} + z^{-i} \sum_{n=0}^{\infty} r_n z^{-n} \right)$$

$$= \sum_{i=0}^{m} a_i \left[r_{-i} + r_{-i+1} z^{-1} + \ldots + r_{-1} z^{-(i-1)} + z^{-i} R(z) \right]$$

where $R(z)$ is the z-transform of the input $r^*(t)$.

Assume $r_n = 0$ for $n < 0$, i.e. zero initial conditions, then

$$W = \sum_{i=0}^{m} a_i z^{-i} R(z),$$

and equation (8) reduces to

$$C(z) = R(z) \sum_{i=0}^{m} a_i z^{-i} - C(z) \sum_{j=1}^{k} b_j z^{-j} \qquad (9)$$

The z-transform relating the input and output sequences is thus

$$H(z) = \frac{C(z)}{R(z)} = \frac{\sum_{i=0}^{m} a_i z^{-i}}{1 + \sum_{j=1}^{k} b_j z^{-j}} = H(s)\Big/_{s=1/T \ln z} \qquad (10)$$

This is known as the digital (or pulse) transfer function of the program defined by the difference equation (7).

In the situation where the initial values

$$r_n \text{ for } n = -i \text{ to } -1$$

and

$$c_n \text{ for } n = -j \text{ to } -1$$

are not zero, the digital transfer function becomes, from equation (8)

$$H(z) = \frac{C(z)}{R(z)}$$

$$= \frac{\sum_{i=0}^{m} a_i z^{-i}}{1 + \sum_{j=1}^{k} b_j z^{-j}} + \frac{\sum_{i=0}^{m} a_i \left(\sum_{\ell=1}^{i} r_{-\ell} z^{-(i-\ell)} \right) - \sum_{j=0}^{k} b_j \left(\sum_{\ell=1}^{j} c_{-\ell} z^{-(i-\ell)} \right)}{1 + \sum_{j=1}^{k} b_j z^{-j}} \qquad (11)$$

where the second term contains the effect of these non-zero initial values.

4.0 ERRORS IN DIGITAL DATA SYSTEMS

Before proceeding with the discussion of realizable reconstruction devices for digital data systems, it is of interest to separate the reconstruction errors from other possible errors in the system. To this end, consider the system design problem illustrated in Figure 4(a). The system receives an input $r(t)$, produces an output $c(t)$ which can be compared with a desired output $d(t)$, the result of some ideal operation which also receives $r(t)$ as an input.

This difference between the desired output $d(t)$ and the actual output $c(t)$ defines the system error $\varepsilon(t)$. The problem of specifying separately the digital program and the data reconstruction device can be done only after their separate functions have been defined, for the over-all system design is defined quite independently of these separate functions. Indeed this separation of the individual functions of the two devices becomes necessary only in order to reduce the problem to a manageable form.

The most likely function for the digital program would be that it attempts to produce, at the sample instants, samples of the ideal output $d(t)$, as shown in Figure 4(b). One can then define a sampled digital program error, $\varepsilon_d^*(t)$, as the difference between the samples of the ideal output, $d^*(t)$, and the program output

$$\varepsilon_d^*(t) = d^*(t) - c^*(t) \tag{12}$$

or

$$c^*(t) = d^*(t) - \varepsilon_d^*(t) \tag{13}$$

Let this digital error, $\varepsilon_d^*(t)$, be a sample of some continuous digital program error signal, $\varepsilon_d(t)$, where, from (12),

$$\varepsilon_d(t) = d(t) - c_I(t) \tag{14}$$

where $c_I(t)$ is the ideal recovery of the sampled signal $c^*(t)$. Figure 4(a) can now be visualized as Figure 4(c).

The function of the data reconstruction device is now defined as that of attempting the ideal recovery of the sampled signal it receives. The ideal recovery of $c^*(t)$ was defined as $c_I(t)$, and a reconstruction error, $\varepsilon_c(t)$, can be defined as;

$$\varepsilon_c(t) = c_I(t) - c(t) \tag{15}$$

or

$$c(t) = c_I(t) + \varepsilon_c(t) \tag{16}$$

The system now becomes as shown in Figure 4(d).

Since the operations of sampling, followed by ideal recovery, result in the recovery of the original signal, these operations cancel, and the total system error becomes;

$$\varepsilon(t) = \varepsilon_d(t) + \varepsilon_c(t) \tag{17}$$

where, to repeat,

$\varepsilon_d(t)$ = digital error, the ideal recovery of the sampled signal which is the difference between the ideal output at the sample times, and the computed values at these same instants.

$\varepsilon_c(t)$ = reconstruction error, the difference between the ideal recovery of the digital output, and the actual output.

This report will now discuss the reconstruction error, $\varepsilon_c(t)$, for realizable reconstruction filters. The problem of the digital error, $\varepsilon_d(t)$, is considered elsewhere (Ref. 9).

5.0 POLYNOMIAL RECONSTRUCTION FILTERS

It was seen in Section 3.4 and Figure 3 that the ideal reconstruction filter has the ideal low-pass characteristics and so is non-realizable. One is led to compare realizable filters with this ideal. A class of realizable filters are the polynomial filters described by means of Figure 5.

Let the reconstruction filter output, c(t), be given as an Nth-degree polynomial, such that

$$c(t) = \sum_{i=0}^{N} \alpha_{i,n}(t-nT)^i$$

for $$nT \leq t < (n+1)T \qquad (18)$$

The current values of the coefficients $\alpha_{i,n}$ for i = 0, 1, 2, ... N will be obtained by use of past values of the output, i.e.,

$$\alpha_{i,n} = \alpha_{i,n}(c_n, c_{n-1}, c_{n-2}, \ldots c_{n-N})$$

In this discussion we will distinguish among three types of polynomial filters, the EXTRAPOLATING filter, the SMOOTHED EXTRAPOLATING filter, and the DELAYED filter.

Consider first the extrapolating filter. At the time $t = nT$, the most recent value of c_i available is c_n, and let the output then start at this value.

i.e., $c(t) = c_n$ at $t = nT$

Now let $c(t)$ be an Nth-degree polynomial which also passes through the most recent N values of c_i,

i.e.,

$$\begin{aligned} c(t) &= c_{n-1} \quad \text{at} \quad t = (n-1)T \\ &= c_{n-2} \quad \text{at} \quad t = (n-2)T \\ &\;\;\vdots \\ &= c_{n-N} \quad \text{at} \quad t = (n-N)T \end{aligned}$$

Thus, this filter is seen to generate an intersample signal which is such as to predict, with an Nth-order prediction, the value of c_{n+1}. At the time $t = (n+1)T$ when c_{n+1} becomes available, it will, in general, differ from the predicted value, and so $c(t)$ will have discontinuities at the sample times.

The smoothed extrapolating filter is a logical extension of the extrapolating filter which does not allow discontinuities in the output at $t = nT$ to appear, but applies the required correction linearly over the next sample interval, i.e. in the interval $nT \leq t < (n+1)T$.

Another means of overcoming the discontinuity in the extrapolating filter output is to generate a signal which passes through c_n only at a time $t = (n+1)T$. In other words, wait one sample interval until the end point of the intersample signal is known, then generate it by N^{th}-order interpolation. This defines the delayed filter.

In the sections that follow various polynomial filters are discussed, their frequency responses are given, and circuits for their realization using standard analog computer components are given.

5.1 Zero-Order Filter (Clamp or Zero-Order Hold)

A very common polynomial filter is the zero-order filter, where the most recent value of the output sequence is converted to a level which is held throughout the intersample period, i.e.,

$$c(t) = c_n$$

for $$nT \leq t < (n+1)T$$

The operation of this clamp recovery filter is illustrated in Figure 6(a).

The unit sample or impulse response is seen to be

$$h_o(t) = 1, \quad 0 \leq t < T$$
$$= 0 \quad \text{otherwise}$$

Taking the Laplace transform of this impulse response results in the transfer function of this filter, i.e.,

$$H_o(s) = \left(\frac{1 - e^{-Ts}}{s}\right) \tag{19}$$

The frequency response Figure 6(c) of this first-order hold is obtained by substituting $s = j\omega$, to yield

$$|H_o(j\omega)| = \frac{2\pi}{\omega_s} \frac{|\sin x|}{x} \tag{20}$$

cont'd

and $$\angle H_o(j\omega) = - x \frac{\sin x}{|\sin x|} \tag{20}$$

where $$x = \left(\frac{\omega T}{2}\right) = \pi/Y$$

and where Y is the number of samples per cycle of the input of frequency ω rad./sec.

In digital-data systems, the usefulness of the zero-order hold (or clamp or filter) results from the fact that most, if not all, commercial digital-analog converters convert the digital sequence $\{c_n\}$ to a voltage level which is, in fact, held throughout the succeeding interval, i.e., includes a zero-order filter. Thus any reconstruction filter of interest must include the $H_o(s)$ transfer function as one of its factors. Often the zero-order recovery is of sufficient accuracy that its output can be used directly.

It is also possible to realize another form of a zero-order filter with a conventional analog computer integrator, as shown in Figure 6(b).

The input is applied to the initial condition input of an integrator which is periodically put into the reset mode for a short time at the sample instants, remaining on "hold" or "operate" between these sample times. The time during which the integrator must be in the reset mode is, for conventional analog computer components, a function of the time constant formed by the integrating capacitor and initial condition resistors. In many modern analog computers, this reset time is reduced to negligible amounts by special design (see Ref. 10).

5.2 First-Order Filters

5.2.1 First-Order Extrapolator - Unsmoothed

The first-order extrapolating filter, or first-order hold, has an output given by

$$c(t) = (c_n - c_{n-1})\,(t - nT) + c_n$$

for $$nT \leq t < (n+1)T$$

This is illustrated in Figure 7(a).

At the time nT, the slope of c(t) is assumed constant and given by

$$\left(\frac{c_n - c_{n-1}}{T}\right)$$

and a linear extrapolation of a signal of this slope is generated which starts at c_n. The impulse response is illustrated in Figure 7(b).

Thus,

$$h_1(t) = (1+t/T)u(t) - 2u(t-T) - 2u(t-T)\left(\frac{t-T}{T}\right)$$

$$+ u(t-2T) + u(t-2T)\left(\frac{t-2T}{T}\right)$$

where u(t) is a unit step at t = 0.

$$h_1(t) = (1+t/T)u(t) - 2\left(1 + \frac{t-T}{T}\right)u(t-T) + \left(1 + \frac{t-2T}{T}\right)u(t-2T)$$

Now

$$L\{f(t-\tau)\} = e^{-\tau s} F(s) \quad \text{if } f(t-\tau) = 0 \quad \text{for } t < \tau$$

Thus the Laplace transform of this filter is

$$H_1(s) = \left(\frac{1}{s} + \frac{1}{Ts^2}\right)\left(1 - 2e^{-Ts} + e^{-2Ts}\right)$$

$$= (s + 1/T)\left(\frac{1 - e^{-Ts}}{s}\right)^2 \qquad (21)$$

The frequency response, Figure 7(c), is given by

$$|H_1(j\omega)| = \frac{2\pi}{\omega_s}\left[\frac{\sin x}{x}\right]^2 \sqrt{1 + 4x^2}$$

and

$$\angle H_1(j\omega) = -2x + \tan^{-1}(2x) \qquad (22)$$

where $x = \frac{\omega T}{2}$ as before.

In order to realize this first-order filter, using analog computing components, consider

$$H_1(s) = \left(1 + \frac{1}{sT}\right)\left(\frac{1 - e^{-Ts}}{s}\right)(1 - e^{-Ts})$$

Now this transfer function is seen to be the response of a circuit which has an input

$$\xi(s) = (1 - e^{-Ts})$$

followed by a zero-order hold

$$H_o(s) = \left(\frac{1 - e^{-Ts}}{s}\right)$$

followed by a circuit which has the transfer function

$$\left(1 + \frac{1}{sT}\right)$$

This is shown in Figure 7(d).

The problem now is to generate a signal which has the transform e^{-Ts}.

Consider the output of the integrator, x(t), then

$$X(s) = \xi(s)\left(\frac{1 - e^{-Ts}}{s}\right)\left(\frac{1}{Ts}\right)$$

$$= (1 - e^{-Ts})^2\left(\frac{1}{Ts^2}\right)$$

The <u>sampled</u> value of this signal has the transform (Ref. 1, Appendix A, where $z = e^{sT}$)

$$X^*(s) = (1 - e^{-Ts})^2\left(\frac{1}{T}\right)\left[\frac{Te^{-Ts}}{(1 - e^{-Ts})^2}\right] = e^{-Ts}$$

Thus the samples of x(t) are our required signal. Moving the zero-order hold outside the loop, and accounting for analog computer component sign changes, the complete circuit is shown in Figure 7(e).

5.2.2 First-Order Extrapolator - Smoothed

It is seen, from Figure 7(a), that the first-order filter has discontinuities at the sample instants due to the difference between the first-order prediction of the next output sample, and the actual value of this sample. One can avoid this by applying this correction linearly over the succeeding sample interval as shown in Figure 8(a).

$$c(t) = c_n + (t-nT)\,(c'_{n+1}-c_n) + (1 - [t-nT])\,(c'_n-c_n)$$

for $$nT \leq t < (n+1)T$$

where the primed values are the first-order predictions of the output sequence values,

i.e. $$c'_{n+1} = (c_n-c_{n-1}) + c_n$$

$$c'_n = (c_{n-1}-c_{n-2}) + c_{n-1}$$

Thus,

$$c(t) = c_n + (t-nT)\,(c_n-c_{n-1}) + (1 - [t-nT])\,(2c_{n-1}-c_{n-2}-c_n)$$

for $$nT \leq t < (n+1)T$$

The impulse response of the circuit with the required properties is shown in Figure 8(b), together with the unsmoothed case for comparison.

Thus,

$$h_{1,s}(t) = 2u(t)\ (t/T) - 5u(t-T)\left(\frac{t-T}{T}\right) + 4u(t-2T)\left(\frac{t-2T}{T}\right)$$

$$- u(t-3T)\left(\frac{t-3T}{T}\right)$$

and

$$H_{1,s}(s) = 2\left(\frac{1}{s^2T}\right) - 5e^{-Ts}\left(\frac{1}{s^2T}\right) + 4e^{-2Ts}\left(\frac{1}{s^2T}\right) - e^{-3sT}\left(\frac{1}{s^2T}\right)$$

$$= \left(\frac{1 - e^{-sT}}{s}\right)\left(\frac{1}{sT}\right)[2 - 3e^{-sT} + e^{-2sT}] \qquad (23)$$

The frequency response, Figure 8(c), is given by,

$$|H_{1,s}(j\omega)| = \frac{2\pi}{\omega_s}\left[\frac{\sin x}{x}\right]^2\sqrt{5 - 4\cos 2x}$$

$$\underline{/H_{1,s}(j\omega)} = -2x + \tan^{-1}\left(\frac{\sin 2x}{2 - \cos 2x}\right)$$

To realize this first-order smoothed filter, we again recognize the clamp and integrator, and require to obtain an input

$$\xi(s) = (2 - 3e^{-sT} + e^{-2sT})$$

$$= 1 + (1 - 3e^{-sT} + e^{-2sT})$$

as shown in Figure 8(d).

The integrator output is

$$X(s) = \xi(s)\, H_o(s) \left(\frac{1}{Ts}\right)$$

$$= (2 - 3e^{-sT} + e^{-2sT})\ (1 - e^{-sT}) \left(\frac{1}{Ts^2}\right)$$

The sampled value of this output has the transform

$$X^*(s) = (2 - 3e^{-sT} + e^{-2st})\ (1 - e^{-sT}) \left(\frac{1}{T}\right) \left[\frac{Te^{-sT}}{(1 - e^{-sT})^2}\right]$$

$$= e^{-sT}\ (2 - e^{-sT})$$

Thus the circuit of Figure 8(d) becomes Figure 8(e).

The additive signal at the input is recognized as being the $\xi(s)$ signal for the unsmoothed first-order case, and Figure 8(f) results.

5.2.3 First-Order Interpolator - Delayed

Another means of overcoming the discontinuities of the first-order extrapolator is to allow for a delay of one sample interval, at which time a linear interpolation can be performed. This is illustrated in Figure 9(a).

The output is given by

$$c(t) = (c_n - c_{n-1})\ (t - nT) + c_{n-1}$$

The impulse response shown in Figure 9(b) is

$$h_{1,d}(t) = u(t)\ t/T - 2u(t-T)\left(\frac{t-T}{T}\right) + u(t-2T)\left(\frac{t-2T}{T}\right)$$

Thus the transform is

$$H_{1,d}(s) = \frac{1}{Ts^2}\left(1 - 2e^{-Ts} + e^{-2Ts}\right)$$

$$= \frac{1}{T}\left(\frac{1 - e^{-Ts}}{s}\right)^2 \qquad (24)$$

The frequency response, Figure 9(c), is given by

$$|H_{1,d}(j\omega)| = \frac{2\pi}{\omega_s}\left[\frac{\sin x}{x}\right]^2$$

$$\angle H_{1,d}(j\omega) = -2x$$

Again, in order to realize this filter, write the transfer function in the form

$$H_{1,d}(s) = \left(\frac{1 - e^{-Ts}}{s}\right)\left(1 - e^{-sT}\right)\left(\frac{1}{sT}\right)$$

The zero-order hold (clamp) and integrator are recognized, as is the $\xi(s)$ signal, as being the same as the extrapolated case. The final realization is shown in Figure 9(d).

5.2.4 First-Order Extrapolator - Ideal

As a measure of the limit of accuracy for linear approximations in the intersample interval, consider the ideal linear case when, at the time $t = nT$, the value of c_{n+1} is known, and the straight line approximation between sample values can be generated. This would be the case, for example, when a known function is being outputted from the digital computer, and the value c_{n+1} can be outputted at the time $t = nT$. Another realization of this ideal case is in the strict data conversion task, when a time delay in the recovery process is of no consequence, and a time shift in the output time axis of one sample interval is allowed.

This ideal linear case is illustrated in Figure 10.

The situation is essentially no different from the first-order delayed case, and, introducing a time advance of T seconds, the transfer function becomes

$$H_{1,I}(s) = e^{Ts} H_{1,d}(s)$$

$$= \frac{e^{Ts}}{T}\left(\frac{1 - e^{-Ts}}{s}\right)^2 \qquad (25)$$

This is seen to be identical with the first-order delayed extrapolator in amplitude, but without the phase shift, and the frequency response is also given in Figure 9(c).

The realization, allowing for the dealy in the output, or the presence of c_{n+1} at time $t = nT$, is the same as in Figure 9(d).

5.3 Second-Order Filters

5.3.1 Second-Order Extrapolating Filter - Unsmoothed

Let the intersample signal be a second-order function of the form

$$c(t) = \alpha_n(t-nT)^2 + \beta_n(t-nT) + \delta_n$$

for $$nT \leq t < (n+1)$$

The coefficients will be chosen such that

$$c(t) = c_n \quad \text{at } t = nT$$

$$= c_{n-1} \quad \text{at } t = (n-1)T$$

$$= c_{n-2} \quad \text{at } t = (n-2)T$$

Thus,

$$c_n = \delta_n$$

$$c_{n-1} = \alpha_n - \beta_n + \delta_n$$

$$c_{n-2} = 4\alpha_n - 2\beta_n + \delta_n$$

Solving gives

$$\alpha_n = \frac{c_n - 2c_{n-1} + c_{n-2}}{2}$$

$$\beta_n = \frac{3c_n - 4c_{n-1} + c_{n-2}}{2}$$

$$\delta_n = c_n$$

Thus,

$$c(t) = \left(\frac{c_n - 2c_{n-1} + c_{n-2}}{2}\right)(t-nT)^2 + \left(\frac{3c_n - 4c_{n-1} + c_{n-2}}{2}\right)(t-nT) + c_n$$

for $\qquad nT \leq t < (n+1)T$

The impulse response shown in Figure 11(a) is

$$h_2(t) = u(t)\left[\frac{(t/T)^2 + 3(t/T) + 2}{2}\right] - u(t-T)\left[\frac{(t/T)^2 + 3(t/T) + 2}{2}\right]$$

$$- u(t-T)\left[\left(\frac{t-T}{T}\right)^2 + 2\left(\frac{t-T}{T}\right)\right] + u(t-2T)\left[\left(\frac{t-T}{T}\right)^2 + 2\left(\frac{t-T}{T}\right)\right]$$

$$+ u\left(\frac{t-2T}{2}\right)\left[\left(\frac{t-2T}{T}\right)^2 + \left(\frac{t-2T}{T}\right)\right] - u\left(\frac{t-3T}{2}\right)\left[\left(\frac{t-2T}{T}\right)^2 + \left(\frac{t-2T}{T}\right)\right]$$

which can be written in the form

$$h_2(t) = \frac{u(t)}{2}\left[\left(\frac{t}{T}\right)^2 + 3\left(\frac{t}{T}\right) + 2\right] - 3/4\ u(t-T)\left[\left(\frac{t-T}{T}\right)^2 + 3\left(\frac{t-T}{T}\right) + 2\right]$$

$$+ 3/4\ u(t-2T)\left[\left(\frac{t-2T}{T}\right)^2 + 3\left(\frac{t-2T}{T}\right) + 2\right]$$

$$- 1/4\ u(t-3T)\left[\left(\frac{t-3T}{T}\right)^2 + 3\left(\frac{t-3T}{T}\right) + 2\right]$$

Taking the Laplace transform

$$H_2(s) = \left(\frac{1}{T^2} + \frac{3s}{2T} + s^2\right)\left(\frac{1 - e^{-sT}}{s}\right)^3 \qquad (26)$$

The frequency response, Figure 11(b), is given by

$$|H_2(j\omega)| = \frac{2\pi}{\omega_s}\left[\frac{|\sin x|}{x}\right]^3 \cdot \sqrt{1 + x^2 + 16x^4}$$

and

$$\underline{/H_2(j\omega)} = -3x\,\frac{\sin x}{|\sin x|} + \tan^{-1}\left(\frac{3x}{1 - 4x^2}\right)$$

As before, we split $H_2(s)$ into recognizable factors

$$H_2(s) = \left(\frac{1}{T^2s^2} + \frac{3}{2Ts} + 1\right)\left(\frac{1 - e^{-sT}}{s}\right)(1 - 2e^{-sT} + e^{-2sT})$$

which is realizable in the form suggested by Figure 11(c).

Consider the signal

$$e(t) = \alpha x(t) + \beta y(t)$$

and enquire if there exist values of α and β such that

$$E^*(s) = -2e^{-sT} + e^{-2sT}$$

Now

$$X(s) = (1 - e^{-sT})^2\left(\frac{1 - e^{-sT}}{s}\right)\left(\frac{1}{Ts}\right)$$

$$\therefore \quad X^*(s) = (1 - e^{-sT})^3 \cdot \frac{1}{T} \cdot \left[\frac{Te^{-sT}}{(1 - e^{-sT})^2}\right]$$

$$= e^{-sT}(1 - e^{-sT})$$

Similarly,

$$Y^*(s) = \frac{e^{-sT}\,(1 + e^{-sT})}{2}$$

$$\therefore \quad E^*(s) = \alpha e^{-sT}\,(1 - e^{-sT}) + \beta e^{-sT}\,(1 + e^{-sT})$$

$$= -\,2e^{-sT} + e^{-2sT}$$

Solving, $\alpha = -1$, $\beta = -3/2$.

Thus the filter can be realized as shown in Figure 11(d)

5.3.2 <u>Second-Order - Unit Delay</u>

Again, the presence of the discontinuities at the sample instants can be avoided at the expense of adding a delay. In this case we get

$$c(t) = \left(\frac{\tau^2 + \tau}{2}\right)c_n + (1 - \tau^2)c_{n-1} + \left(\frac{\tau^2 - \tau}{2}\right)c_{n-2}$$

where $\tau = (t - nT)$

It is seen that

$$c(t) = c_n \quad \text{at} \quad \tau = 1; \quad t = (n+1)T$$

$$= c_{n-1} \quad \text{at} \quad \tau = 0; \quad t = nT$$

$$= c_{n-2} \quad \text{at} \quad \tau = -1; \quad t = (n-1)T$$

The impulse response is shown in Figure 12(a),

and

$$h_{2,d}(t) = \left[(t/T)^2 + t/T\right]\frac{u(t)}{2} - \left[(t/T)^2 + t/T\right]\frac{u(t-T)}{2}$$

$$+\left[1 - \left(\frac{t-T}{T}\right)^2\right] u(t-T) - \left[1 - \left(\frac{t-T}{T}\right)^2\right] u(t-2T)$$

$$+\left[\left(\frac{t-2T}{T}\right)^2 - \left(\frac{t-2T}{T}\right)\right] u(t-2T) - \left[\left(\frac{t-2T}{T}\right)^2 - \left(\frac{t-2T}{T}\right)\right] u(t-3T)$$

or

$$h_{2,d}(t) = \left[(t/T)^2 + (t/T)\right]\frac{u(t)}{2} - 3/2\left[\left(\frac{t-T}{T}\right)^2 + \left(\frac{t-T}{T}\right)\right] u(t-T)$$

$$+ 3/2\left[\left(\frac{t-2T}{T}\right)^2 + \left(\frac{t-2T}{T}\right)\right] u(t-2T)$$

$$- 1/2\left[\left(\frac{t-3T}{T}\right)^2 + \left(\frac{t-3T}{T}\right)\right] u(t-3T)$$

Taking the Laplace transform,

$$H_{2,d}(s) = \left[\frac{1}{T^2} + \frac{s}{2T}\right]\left(\frac{1 - e^{-Ts}}{s}\right)^3 \qquad (27)$$

The frequency response, Figure 12(b), is given by

$$|H_{2,d}(j\omega)| = \frac{2\pi}{\omega_s}\left[\frac{|\sin x|}{x}\right]^3 \sqrt{1 + x}$$

$$\angle H_{2,d}(j\omega) = 3x\,\frac{\sin x}{|\sin x|} + \tan^{-1} x$$

The filter can be realized by considering

$$H_{2,d}(s) = (1 - 2e^{-Ts} + e^{-2Ts})\left(\frac{1 - e^{-sT}}{s}\right)\left(\frac{1}{T^2 s^2} + \frac{1}{2Ts}\right)$$

which is shown in final form in Figure 12(c).

5.3.3 <u>Second-Order Extrapolator - Ideal</u>

Again, as in Section 5.2.4, one can conside· the recovery when delay is of no consequence, or when c_{n+1} is known at time nT. The transfer function is obviously

$$H_{2,I}(s) = H_{2,d}(s) \cdot e^{sT}$$

$$= e^{sT}\left[\frac{1}{T^2} + \frac{s}{2T}\right]\left(\frac{1 - e^{-sT}}{s}\right)^3 \qquad (28)$$

and is realized using Figure 12(c).

Forming the frequency response, the amplitude is the same as for the unit delay case (Fig. 12(b)) but with the phase

given by

$$\angle H_{2,I}(j\omega) = - x \frac{\sin x}{|\sin x|} + \tan^{-1} x$$

which is included in Figure 12(b).

5.4 General N^{th}-Order Filters

The realization of the discussed extrapolators, and, when delays are allowed, interpolators, with analog computer components suggests that, in general, any polynomial filter can be realized in this way. This has been proved in general (Ref. 11), where the general N^{th}-order filter, with or without delay, will have the form show in Figure 13. The α_i and β_i are positive or negative.

6.0 OTHER RECONSTRUCTION FILTERS

Needless to say, the class of polynomial filters discussed in the previous section are by no means the only type of realizable filters deserving of attention, although it will be seen that, in most cases, they provide the best performance for a given complexity. Two additional types are discussed here, the fractional-order hold, and first- and second-degree exponential types of filters.

6.1 The Fractional-Order Hold

For reasons which are apparent when the frequency response of the zero- and first-order polynomial filters are compared, a seemingly more satisfactory frequency response is obtained by a filter which is a compromise between the two.

For such a filter, let the output be given by

$$c(t) = k(c_n - c_{n-1})\,(t - nT) + c_n$$

for

$$nT \leq t < (n+1)T$$

and where

$$0 \leq k \leq 1$$

When k = 0, the filter becomes a zero-order filter, and when k = 1 it becomes a first-order filter. Such a filter, for arbitrary k, is known as the fractional-order filter (or hold) (Ref. 1, pp. 49-51).

The impulse response is shown in Figure 14(a), and shows how the overshoot of the first-order filter is decreased by allowing k to be less than 1.

The impulse response is given by

$$h_k(t) = u(t)\,[1 + kt/T] - (1+k)u(t-T) - \frac{2k}{T}\,(t-T)u(t-T)$$

$$+ ku(t-2T) + \frac{k}{T}\,(t-2T)u(t-2T)$$

$$= u(t)\,[1 + kt/T] - u(t-T)\,[(1+k) + \frac{2k}{T}\,(t-T)]$$

$$+ u(t-2T)\left[k + k\,\frac{(t-2T)}{T}\right]$$

Taking the Laplace transform,

$$H_k(s) = \left(\frac{1}{s} + \frac{k}{Ts^2}\right) - \frac{(1+k)e^{-Ts}}{s} - \frac{2ke^{-Ts}}{T}\left(\frac{1}{s^2}\right)$$

$$+ \frac{k}{s} e^{-2Ts} + \frac{k}{T} e^{-2Ts}\left(\frac{1}{s^2}\right)$$

which can be written in the form

$$H_k(s) = (1 - ke^{-Ts})\left(\frac{1 - e^{-Ts}}{s}\right) + \frac{k}{Ts+1}\left[(s+1/T)\left(\frac{1 - e^{-Ts}}{s}\right)^2\right]$$

$$= (1 - ke^{-Ts})\, H_o(s) + \frac{k}{Ts+1} H_1(s) \tag{29}$$

The frequency response for this fractional-order hold is shown in Figure 14(b), and is given by

$$|H_k(j\omega)| = \frac{2\pi}{\omega_s} \frac{|\sin x|}{x} \sqrt{R(x,k)}$$

where

$$R(x,k) = 1 + k^2 - 2k \cos 2x + \frac{k^2 \sin x}{x}\left(\frac{\sin x}{x} - 2 \cos x\right)$$

$$+ \frac{2k \sin x \cos x}{x}$$

and

$$\underline{/H_k(j\omega)} = - 2x + \tan^{-1}\left\{\frac{(1+k) \sin x}{(1-k) \cos x + k \frac{\sin x}{x}}\right\}$$

The realization of this k^{th}-order hold follows from the definition of its operation and the first-order hold of Figure 7(e). It is shown in Figure 14(c).

Notice that this requires no more amplifiers than the first-order filter, which it becomes when k = 1.

6.2 Exponential Reconstruction Filters

The polynomial filters considered in the previous sections are not the only realizable reconstruction filters possible; it is also possible to approach this filter design by more conventional means. The following considers the problem depicted in Figure A2, where the output of the D/A converter is fed to an exponential filter (i.e., possessing a finite number of poles). Two cases are considered, the first-order case and the second-order case.

6.2.1 First-Order Exponential

Let H(s) be a first-order lag with cut-off frequency b, i.e.,

$$H(s) = \frac{b}{s+b}$$

The reconstruction filter will have the transfer function

$$H_{1,e}(s) = \left(\frac{1 - e^{-sT}}{s}\right)\left(\frac{b}{s+b}\right) \tag{30}$$

The frequency response, plotted in Figure 15, is

given by

$$|H_{1,e}(j\omega)| = \frac{2\pi}{\omega_s}\left[\frac{|\sin x|}{x}\right]\frac{\sqrt{1+\left(\frac{2x}{K\pi}\right)^2}}{1+\left(\frac{2x}{K\pi}\right)^2}$$

$$\angle H_{1,e}(j\omega) = -x\frac{\sin x}{|\sin x|} - \tan^{-1}\left(\frac{2x}{K\pi}\right)$$

where $x = \frac{\omega T}{2}$ as before, and where

$$K = \frac{b}{(\omega_s/2)}$$

6.2.2 <u>Second-Order Exponential</u>

For H(s) second-order, the reconstruction filter will have the transfer function

$$H_{2,e}(s) = \left(\frac{1-e^{-sT}}{s}\right)\left(\frac{\omega_n^2}{s^2+2\zeta\,\omega_n s+\omega_n^2}\right) \tag{31}$$

The frequency response is given by

$$|H_{2,e}(j\omega)| = \frac{2\pi}{\omega_s}\frac{|\sin x|}{x}\frac{\sqrt{\left[1-\left(\frac{2x}{K\pi}\right)^2\right]^2+4\zeta^2\left(\frac{2x}{K\pi}\right)^2}}{\left[1-\left(\frac{2x}{K\pi}\right)^2\right]^2+4\zeta^2\left(\frac{2x}{K\pi}\right)^2}$$

$$\angle H_{2,e}(j\omega) = -x\frac{\sin x}{|\sin x|} - \tan^{-1}\left[\frac{2\zeta\left(\frac{2x}{K\pi}\right)}{1-\left(\frac{2x}{K\pi}\right)^2}\right]$$

where

$$K = \frac{\omega_n}{(\omega_s/2)}$$

This is plotted in Figures 16(a) to (d) for various values of ζ and $\frac{\omega_n}{(\omega_s/2)}$.

7.0 DISCUSSION OF FREQUENCY CHARACTERISTICS

As discussed in Sections 3.3 and 3.4, it is the task of the recovery filter to separate the signal contained in the frequency interval $-\omega_s/2 < \omega < \omega_s/2$ from the sampling sidebands centred at frequencies $k\omega_s$ for all non-zero integer k. Ideally, the amplitude response of the filter should be unity for as large a frequency interval as possible near zero, and should be as near zero as possible for an equivalent frequency interval about the sideband center frequencies. The desired phase response of the filter will depend on whether or not a time lag in the recovery operation can be tolerated. If the phase response increases linearly with frequency over the above-mentioned frequency interval, then phase distortion will be absent, and the signal is recovered delayed in time by a value equal to the phase slope. Obviously any closed-loop or otherwise real time situation would be affected by this delay, whereas open-loop signal recovery would not.

It is evident, from the frequency responses presented, that the choice of a suitable recovery filter is a task which depends critically on the frequency content of the signal being recovered, as well as on the system in which the filter is to appear; even complexity does not allow for any "better" or "best" choice. However, a number of general comments can be made.

Consider the zero-, first- and second-order filter of Figures 6(c), 7(c) and 11(b), the significant features of

which are summarized and compared in Figure 17. In general, an increase in complexity yields a better approximation to the ideal only at very low frequencies, and results in increased departure from the ideal at the higher frequencies. Of special note are the avoidance of delay near zero frequency for the first- and second-order filters (at the expense of phase distortion), and the increased attenuation of the sidebands (again for low frequencies).

The fractional-order hold of Figure 14(b) illustrates how a compromise between the zero- and first-order filters yields a more satisfactory amplitude response to a significantly higher frequency. This is achieved at the expense of decreasing the sideband attenuation over that possible with the first-order case, and the introduction of both phase distortion and delay at all frequencies.

The first-order smoothed filter, as expected, increases the attenuation of the sidebands at the expense of delay and increased distortion for higher frequencies. The first-order ideal and first-order delayed markedly decrease the sideband contributions at the expense of delay (for the delayed case) but without phase distortion.

The first-order exponential seems to have little to recommend it. It decreases the bandwidth, for a given amplitude error, over the zero-order case, and also increases delay and adds phase distortion. Its only advantage is the increased attenuation of the sidebands.

The second-order exponential of Figures 16(a) to (d) is much more interesting. The presence of the under-damped filter compensates for the droop in the zero-order frequency response to extend the bandwidth for a given amplitude error.

This is done at the expense of increased phase lag, which is in the form of increased delay at zero frequency over that of the zero-order case, as well as the presence of phase distortion. The sidebands are markedly attenuated, the attenuation increasing, as expected, as the resonant frequency of the filter is decreased. This reduction of resonant frequency, however, decreases the bandwidth of the filter.

8.0 ROOT MEAN SQUARE RECOVERY ERROR OF FILTERS

One of the conclusions of the previous sections can only be that the frequency response characteristics of the reconstruction filters are rather difficult to interpret in any general way. Typically, the requirements for undistorted transmission near zero frequency (i.e. low amplitude, phase distortion and delay) conflict with the requirements for attenuation of the sideband components. Choosing the reconstruction filter on the basis of these frequency response curves alone would necessarily depend greatly on the details of the problem in hand, where the relative demerits of errors in the various frequency intervals would have to be assigned. There is an obvious need for a more analytic filter rating procedure.

One can attempt this more rational filter rating by proceeding along the lines suggested in Section 4, where the reconstruction error, $\varepsilon_c(t)$, was defined. Assume that the digital signal fed to the recovery filter is the sampled version of the signal which is to be recovered. The difference between this signal before sampling, and the recovery filter output, is directly, then, the reconstruction error for the filter. This is illustrated in Figure 18. It remains to choose the recovery filter such that, for a given $f(t)$, there is an acceptable reconstruction error $\varepsilon(t)$.

Although many measures of reconstruction error are possible, e.g. maximum error, mean error, etc., each of which might be appropriate in given circumstances, the root mean square value of this reconstruction error will be considered here.

In the discussions that follow, time is measured by the relation

$$t = (n+p)T \tag{32}$$

where T = sample interval, seconds
n = integer
p = intersample parameter, where $0 \leq p < 1$

and the following notation is introduced:

$$g(t) = g\,[(n+p)T] = g_{n+p} \tag{33}$$

Using (32) and (33), the reconstruction error from Figure 18 is given by

$$\varepsilon_{n+p} = g_{n+p} - f_{n+p}$$

for $0 \leq p < 1$ and all integers n.

Let the input be a complex sinusoid of frequency ω, then

$$f(t) = e^{j\omega t}$$

or

$$f_{n+p} = e^{j\omega nT} \cdot e^{j\omega pT}$$

Let

$$\omega T = a$$

then

$$f_{n+p} = e^{jan} \cdot e^{jpa}$$

and

$$\varepsilon_{n+p} = g_{n+p} - e^{jan} \cdot e^{jpa} \tag{34}$$

The mean square value of this reconstruction error will be

$$\overline{\varepsilon^2(t)} = \lim_{\tau \to \infty} \frac{1}{\tau} \int_0^{\tau} \varepsilon^2(t)dt$$

$$= \lim_{N \to \infty} \frac{1}{NT} \int_0^{NT} \varepsilon^2(t)dt$$

$$= \lim_{N \to \infty} \frac{1}{NT} \left\{ \int_0^{T} \varepsilon^2(t)dt + \int_T^{2T} \varepsilon^2(t)dt + \ldots + \int_{(N-1)T}^{NT} \varepsilon^2(t)dt \right\}$$

$$= \lim_{N \to \infty} \frac{1}{NT} \sum_{n=0}^{N-1} \int_{nT}^{(n+1)T} \varepsilon^2(t)dt.$$

In the nth interval,

$$\varepsilon^2(t) = \varepsilon^2_{n+p}$$

where $$t = (n+p)T$$

and $$dt = Tdp$$

thus,

$$\overline{\varepsilon^2(t)} = \lim_{N\to\infty} \frac{1}{N} \sum_{n=0}^{N-1} \int_0^1 \varepsilon^2_{n+p} dp$$

or, in more symmetric form,

$$\overline{\varepsilon^2(t)} = \lim_{N\to\infty} \frac{1}{N+1} \sum_{n=0}^{N} \int_0^1 \varepsilon^2_{n+p} dp \tag{35}$$

For this complex sinusoidal input the recovery error will be of the form

$$\varepsilon_{n+p} = A(p)e^{jan} \tag{36}$$

Thus, for the real input $f(t) = \cos \omega t$, the recovery error, $e(t)$, will be

$$e_{n+p} = \frac{\varepsilon_{n+p} + \varepsilon^*_{n+p}}{2}$$

where ε^*_{n+p} is the complex conjugate of ε_{n+p}.

Thus,

$$[e_{n+p}]^2 = \frac{\varepsilon^2_{n+p}}{4} + \frac{(\varepsilon^*_{n+p})^2}{4} + \frac{\varepsilon_{n+p}\,\varepsilon^*_{n+p}}{2}$$

Now

$$\varepsilon^2_{n+p} = [A(p)]^2\, e^{2jan}$$

Since

$$\sum_{n=0}^{\infty} \varepsilon_{n+p}^2 = [A(p)]^2 \sum_{n=0}^{\infty} e^{2jan} = \frac{[A(p)]^2}{1 - e^{-2aj}} \quad \text{i.e., exists,}$$

then it follows that

$$\lim_{N\to\infty} \frac{1}{N+1} \sum_{n=0}^{N} \int_0^1 \varepsilon_{n+p}^2 dp = 0$$

Similarly,

$$\lim_{N\to\infty} \frac{1}{N+1} \sum_{n=0}^{N} \int_0^1 [\varepsilon_{n+p}^*]^2 dp = 0$$

Let

$$\frac{\varepsilon_{n+p}\,\varepsilon_{n+p}^*}{2} = \frac{A(p)\,A^*(p)}{2} = I(p) \tag{37}$$

Since I(p) is independent of n, then the mean square recovery error for the cosine input will be

$$\overline{e^2(t)} = \int_0^1 I(p)dp \tag{38}$$

In the sections following, this mean square reconstruction error for a unit cosinusoidal input is determined, and the percent root mean square value is plotted for each as a function of input frequency. The root mean square is defined by:

$$\text{Percent r.m.s. error} = \sqrt{\overline{e^2(t)}} \times 100$$

where $\overline{e^2(t)}$ is given by equation (38) for a unit amplitude cosine input.

In the majority of the cases considered, the root mean square value of the reconstruction error was also determined experimentally, using standard analog computer components. The experimental errors are mainly due to the difficulty in simulating the digital features of the filters with the equipment at hand, and the difficulty of measuring the mean square value of slowly varying signals.

8.1 Root Mean Square Error - Zero-Order Filter

For the zero-order filter, the intersample signal is given by

$$g_{n+p} = f_n$$

and the recovery error, for the complex sinusoid input, by

$$\varepsilon_{n+p} = g_{n+p} - f_{n+p}$$

$$= f_n - f_{n+p}$$

$$= e^{jan} - e^{jan} \cdot e^{jap}$$

$$\varepsilon_{n+p} = e^{jan}(1 - e^{jap})$$

This is of the form of equation (36), and so one forms

$$I(p) = \frac{(\varepsilon_{n+p})\ (\varepsilon^*_{n+p})}{2}$$

$$= 1/2\ [e^{jan}(1 - e^{jap})] \cdot [e^{-jan}(1 - e^{-jap})]$$

$$= 1/2\ (1 - e^{jap} - e^{-jap} + 1)$$

$$= (1 - \cos ap)$$

and $$\overline{e^2(t)} = \int_0^1 I(p)dp = 1 - \frac{\sin a}{a}$$

Substituting for a, the mean square error is given by

$$\overline{e^2(t)} = \left(1 - \frac{\sin \omega T}{\omega T}\right) \tag{39}$$

The percent root mean square value of equation (39) for a unit amplitude cosinusoidal input is plotted in Figure 19 as a function of Y = samples per cycle

where

$$Y = \frac{2\pi}{\omega T}$$

Of interest is the behaviour of the mean square error for small (ωT), or large samples per cycle. This is obtained from (39) and is given by

$$\overline{e^2(t)} \approx \left[\frac{(\omega T)^2}{6} - \frac{(\omega T)^4}{120} + \frac{(\omega T)^6}{5040} - + \ldots\right]$$

8.2 Root Mean Square Error - First-Order Extrapolator - Unsmoothed

The intersample behaviour, from Section 5.2.1, is given by

$$g_{n+p} = f_n(1+p) - pf_{n-1}$$

The recovery error for the input $e^{j\omega t}$ is

$$\varepsilon_{n+p} = e^{jan}\left\{(1+p) - pe^{-ja} - e^{jap}\right\}$$

Forming I(p),

$$I(p) = (1+p+p^2) - p(1+p)\cos a - (1 - \cos a)p \cos pa$$

$$- (\sin a)p \sin pa - \cos pa$$

The mean square error becomes

$$\overline{e^2(t)} = \left[\frac{11 - 5\cos\omega T}{6} - \frac{2(1 - \cos\omega T)\,(\cos\omega T + \omega T \sin\omega T)}{(\omega T)^2}\right] \tag{40}$$

and the percent root mean square value of this is plotted in Figure 19.

For small (ωT), or many samples per cycle, this becomes

$$\overline{e^2(t)} \approx \left[\frac{31(\omega T)^4}{240} - \frac{1061(\omega T)^6}{(84)(720)} + \ldots\right]$$

$$\approx [0.12916\dot{}\,(\omega T)^4 - 0.017543\,(\omega T)^6 + \ldots]$$

8.3 <u>Mean Square Error - First-Order Extrapolator - Smoothed</u>

For the smoothed linear extrapolator, the mean square error becomes

$$\overline{e^2(t)} = \left[\left(\frac{13}{6} - \frac{\cos\omega T}{2} - \frac{2\cos^2\omega T}{3}\right) - \frac{2(1+\cos\omega T-4\cos^2\omega T+2\cos^3\omega T)}{(\omega T)^2}\right]$$

which is plotted in Figure 19.

For small (ωT) this becomes

$$\overline{e^2(t)} = \left[\frac{101(\omega T)^4}{240} - \frac{11342(\omega T)^6}{(720)(147)} + \ldots\right]$$

$$= [0.42083\,(\omega T)^4 - 0.107162\,(\omega T)^6 + \ldots]$$

8.4 Mean Square Error - Delayed First-Order

In this case,

$$\overline{e^2(t)} = \left[\frac{5 + \cos \omega T}{6} - \frac{2 \cos \omega T(1 - \cos \omega T)}{(\omega T)^2}\right]$$

which is also plotted in Figure 19.

Again, for small (ωT) this becomes

$$\overline{e^2(t)} = \left[\frac{(\omega T)^2}{2} - \frac{37(\omega T)^4}{432} + \frac{1101(\omega T)^6}{(252)(720)} - + \ldots\right]$$

$$= \left[\frac{(\omega T)^2}{2} - 0.08565\ (\omega T)^4 + 0.006068\ (\omega T)^6 - + \ldots\right]$$

8.5 Mean Square Error - Ideal First-Order

In the case when delay is allowed, a delay of one sample interval in the comparison loop allows the error to become

$$\varepsilon_{n+p} = g_{n+p} - f_{n+p}$$

where

$g_{n+p} = (f_{n+1} - f_n)p$, i.e. f_{n+1}, is effectively know at time nT.

In this case, the mean square error becomes

$$\overline{e^2(t)} = \left[\frac{5 + \cos \omega T}{6} - \frac{2(1 - \cos \omega T)}{(\omega T)^2}\right]$$

which is plotted in Figure 19.

For small (ωT) this becomes;

$$\overline{e^2(t)} = \left[\frac{(\omega T)^4}{240} - \frac{11(\omega T)^6}{(84)(720)} + \frac{13(\omega T)^8}{(56)(90)(720)} - + \ldots\right]$$

$$= [0.83333\ (\omega T)^4 - 0.036375\ (\omega T)^6 + 0.0007165\ (\omega T)^8 + \ldots]$$

8.6 Mean Square Error - Second-Order Extrapolator

From Section 5.3.1, the second-order intersample response is given by

$$g_{n+p} = \left(\frac{f_n - 2f_{n-1} + f_{n-2}}{2}\right) p^2 + \left(\frac{3f_n - 4f_{n-1} + f_{n-2}}{2}\right) p + f_n$$

For $f(t) = e^{j\omega t}$, the above results in a recovery error given by

$$\varepsilon_{n+p} = [A - Be^{-ja} + Ce^{-2ja} - e^{jap}]\ e^{jna}$$

where

$$a = \omega T \quad \text{as before,}$$

and where

$$A = \frac{p^2 + 3p + 2}{2}$$

$$B = p^2 + 2p$$

$$C = \frac{p^2 + p}{2}$$

Again, this is in the form of equation (36), and one

forms, for a cosine input, the expression

$$I(p) = \frac{\varepsilon_{n+p}\,\varepsilon^*_{n+p}}{2} = \left(\frac{3p^4}{4} + 3p^3 + \frac{15p^2}{4} + \frac{3p}{2} + 1\right)$$

$$- (\cos a)(p^4+4p^3+5p^2+2p) + \cos 2a \left(\frac{p^4+4p^3+5p^2+2p}{4}\right)$$

$$- \cos ap \left(\frac{p^2+3p+2}{2}\right) + \cos [(p+1)a]\ (p^2+2p)$$

$$- \cos [(p+2)a] \left(\frac{p^2+p}{2}\right)$$

Integrating over the intersample parameter p, the mean square recovery error for a cosine input becomes

$$\overline{e^2(t)} = \frac{44}{15} - \frac{58}{15} \cos a \left(1 - \frac{\cos a}{2}\right) + \frac{3 \sin a - 3 \sin 2a + \sin 3a}{a^3}$$

$$+ \frac{3(1 - 3 \cos a + 3 \cos 2a - \cos 3a)}{2a^2}$$

$$+ \frac{(- 3 \sin a + 3 \sin 2a - \sin 3a)}{a}$$

the root mean square value of which is plotted in Figure 20.

Again, for small $a = (\omega T)$, this reduces to

$$\overline{e^2(t)} \approx \left[\frac{106(\omega T)^6}{945} + \ldots\ldots\right]$$

8.7 Mean Square Error - Second-Order - Unit Delay

By a similar procedure, the mean square error

becomes

$$\overline{e^2(t)} = \frac{9}{10} + \frac{2}{15}\left(\cos a - \frac{\cos 2a}{4}\right)$$

$$- \frac{1}{2}\left(\frac{3 \cos a - 3 \cos 2a + \cos 3a - 1}{a^2}\right)$$

$$+ \frac{3 \sin a - 3 \sin 2a + \sin 3a}{a^3}$$

which is plotted in Figure 20.

For small $(\omega T) = a$, this becomes

$$\overline{e^2(t)} \approx \frac{(\omega T)^2}{2} - \frac{577(\omega T)^6}{(1120)(27)} + \ldots.$$

8.8 Mean Square Error - Second-Order - Ideal

In the case where delay can be tolerated and its effect neglected, the mean square error becomes

$$\overline{e^2(t)} = \frac{14}{15} + \frac{2}{15} \cos \omega T \left(\frac{1 - \cos \omega T}{2}\right) - \frac{2 \sin \omega T}{(\omega T)^2}\left(\frac{1 - \cos \omega T}{\omega T}\right)$$

$$- \left(\frac{1 - \cos \omega T}{\omega T}\right)^2$$

which is plotted in Figure 20.

For small (ωT)

$$\overline{e^2(t)} \approx \frac{(\omega T)^6}{945} + \ldots.$$

8.9 Mean Square Error - Fractional-Order Hold

The mean square error is given by

$$\overline{e^2(t)} = 1 + \left(\frac{k^2}{3} + \frac{k}{2}\right)(1 - \cos \omega T) - \frac{\sin \omega T}{\omega T}(1 - k \cos \omega T)$$

$$- \frac{k}{(\omega T)^2}(1 - \cos \omega T)(2 \cos \omega T + \omega T \sin \omega T)$$

This is plotted in Figure 21 for various values of k.

For small (ωT), this behaves as

$$\overline{e^2(t)} \approx \frac{(\omega T)^2}{6}(1 - k)^2 + \ldots.$$

8.10 Mean Square Error - First-Order Exponential

The calculation of mean square error for the exponential filters requires a different technique, and is discussed in Appendix A. There results, for the first-order case,

$$\overline{e^2(t)} = 1 - \frac{\sin \omega T}{\omega T} + \frac{(\sin \omega T - bT \cos \omega T + bT)}{(\omega T)^2 + (bT)^2}$$

$$- \frac{(1 - e^{-2bT})(1 - \cos \omega T)}{2bT(1 - 2e^{-bT} \cos \omega T + e^{-2bT})}$$

This is plotted in Figure 22 for values of

$$K = b/(\omega_s/2)$$

8.11 Mean Square Error - Second-Order Exponential

Again, from Appendix A, the mean square error is shown to be

$$\overline{e^2(t)} = \int_0^1 I(p)dp$$

where

$$I(p) = 1/2 \left[1 + \frac{N(p)}{D}\right]$$

$$N(p) = R^2 + S^2 + U^2 - 2 \cos ap\,(R - SZ + UA^2)$$

$$+ 2 \cos a\,(RS + SU) - 2 \cos [a(1+p)]\,(S - UZ)$$

$$+ 2RU \cos 2a - 2U \cos [a(2+p)]$$

$$+ 2 \cos [(1-p)a]\,(RZ - A^2S) - 2A^2R \cos [(2-p)a]$$

$$D = (1 + Z^2 + A^4) - 2 \cos a\,(Z^2 + ZA^2) + 2A^2 \cos 2a$$

$$R = (1 - YW)$$

$$S = (X + YW - Z)$$

$$U = (A^2 - YX)$$

$$W = \cos (bpT + \phi)$$

$$X = A \cos \langle (1-p)bT - \phi \rangle$$

$$Y = A^p \sec \phi$$

$$Z = 2A \cos bT$$

$$A = e^{-dT}$$

$$\tan \phi = -\frac{d}{b}$$

$$d = \zeta\omega_n$$

$$b = \omega_n \sqrt{1 - \zeta^2}$$

$$a = \omega T$$

This was evaluated digitally, and the resulting root mean square value plotted in Figures 23(a) to 23(c) for various values of

$$\omega_n/(\omega_s/2) \quad \text{and} \quad \zeta$$

9.0 DISCUSSION OF ROOT MEAN SQUARE RECOVERY ERRORS

There are perhaps two general comments which can be made about the root mean square recovery error plots of Figures 19 to 23. First, for more than approximately five samples per cycle of input frequency, increasing the polynomial filter order results in a reduction of root mean square recovery error. And second, the more traditional exponential filters yield a root mean square recovery error which is always greater than that available by using the raw staircase output directly.

One must remember, however, that the above comments are pertinent only if the root mean square recovery error is a valid error measure for the case in hand. The polynomial filters will usually allow discontinuities at the sample instants, as does the zero-order hold itself, whereas the exponential filters provide a great deal of smoothing of the response. This smoothing, however, is achieved at the cost of delay, which is seen to result in the larger root mean square recovery errors.

10.0 CONCLUSIONS

This report is essentially divided into two main sections. In the first, a review of certain topics from the theory of sampled-data systems is presented, which, in the opinion of the author, is more intuitively satisfying than that available elsewhere. This section also contains an analysis of the sources of error occurring in sampled-data systems containing a digital device. Here it is shown that errors in such systems arise from two main processes. The first, a digital error, is due to the numerical approximations made in the digital process used, and the second, a reconstruction error, is due to the recovery process necessary to convert the digital signals to continuous form.

The main body of the report is devoted to a detailed evaluation of the reconstruction errors arising from realizable digital-to-analog conversion processes. It is assumed that the required conversion is achieved in two steps; first the digital data is converted to a staircase signal by a conventional digital-to-analog converter, and this staircase signal is next smoothed by a realizable smoothing filter. Two families of smoothing filters are considered, the finite memory polynomial filters, and the more conventional infinite memory exponential filters. Circuits are presented which allow the filters to be realized using standard analog computing components.

The first comparison between the various digital-to-analog conversion processes is made on the basis of their frequency response characteristics. It is shown that such a comparison does not lead to an analytic evaluation, and it becomes a difficult design task to choose from among the possible solutions. The frequency response curves do, nonetheless, allow certain general comments to be made as to the types of distortions present, such as phase and amplitude errors, ripple

attenuation, etc., and should be considered if certain of these types of error are especially important.

Lastly, a comparison based on the root mean square recovery error is presented. This error is obtained when the digital data to be converted are samples of a sinusoid of varying frequency, and the resulting output is compared with this sinusoid to form the recovery error. The curves presented show the improvement to be expected when the higher order smoothing filters are used, and can be used directly for design purposes when the root mean square error is a suitable design criterion.

11.0 REFERENCES

1. Kuo, B.C. — Analysis and Synthesis of Sampled-Data Control Systems. Prentice-Hall Series in Instrumentation and Controls, 1963.

2. Ragazzini, J.R. Franklin, G.F. — Sampled-Data Control Systems. McGraw-Hill Control Systems Engineering Series, 1958.

3. Jury, E.I. — Sampled-Data Control Systems. John Wiley & Sons, Inc., New York, 1958.

4. Tou, J.T. — Digital and Sampled-Data Control Systems. McGraw-Hill Electrical and Electronic Engineering Series, 1959.

5. Monroe, A.J. — Digital Processes for Sampled Data Systems. John Wiley & Sons, Inc., 1962.

6. Gardner, M.F. Barnes, J.L. — Transients in Linear Systems - Vol. I. John Wiley & Sons, Inc., 1942.

7. DeRusso, P.M. — Optimum Linear Filtering of Signals Prior to Sampling. Trans. AIEE., January 1961. pp. 549-554.

8. Computer Controlled Systems.
Scientific Data Systems Publication 2003.
Section III. p. 3-1.

9. Baxter, D.C. The Digital Simulation of Transfer Functions.
N.R.C. Report MK-13, April 1964.

10. Korn, G.A. New High-Speed Analog and Analog-Digital Computing Techniques: The Astrac System.
Proc. 3rd International Analog Computation Meetings. Gordon and Breach, Science Publishers, Inc., New York, 1962, pp. 513-519.

11. Brulé, J.D. Polynomial Extrapolation of Sampled Data with an Analog Computer.
IRE Trans. on Automatic Control, Vol. AC-7, January 1962, pp. 76-77.

/AM

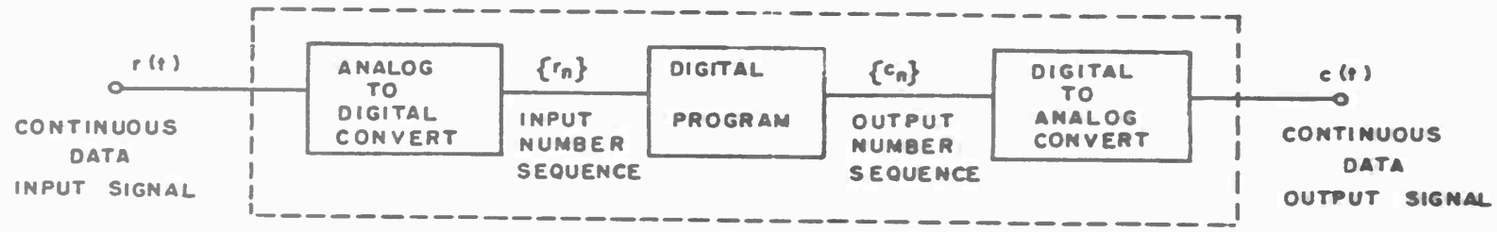

(a) BASIC SYSTEM

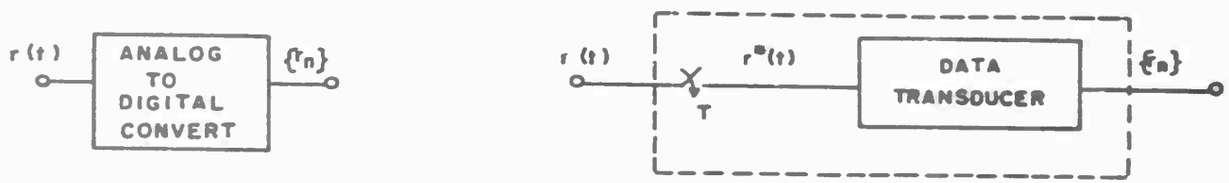

(b) ANALOG DIGITAL CONVERSION

DIGITAL DATA SYSTEMS

FIG. 10b
MK - 12

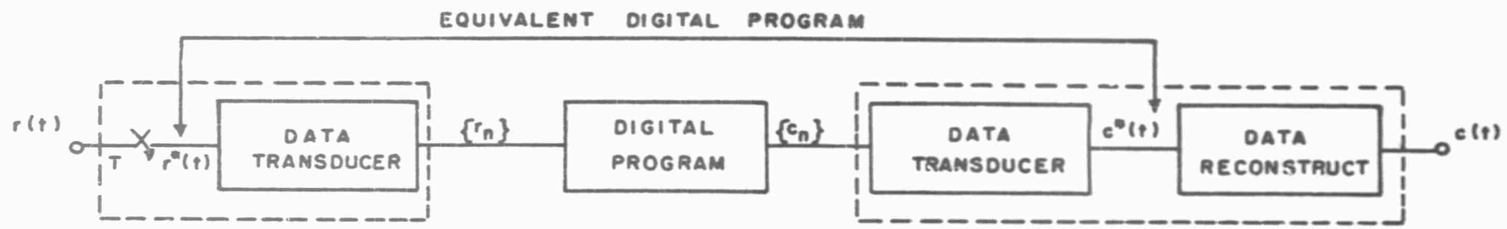

(c) EQUIVALENT DESCRIPTION

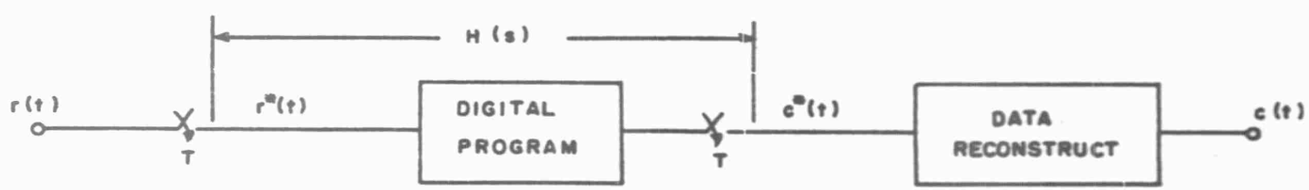

(d) MATHEMATICAL MODEL

DIGITAL DATA SYSTEMS

FIG. 1c,d
MK-12

(a) IDEAL SAMPLING AS AMPLITUDE MODULATION OF ANY IMPULSE CARRIER

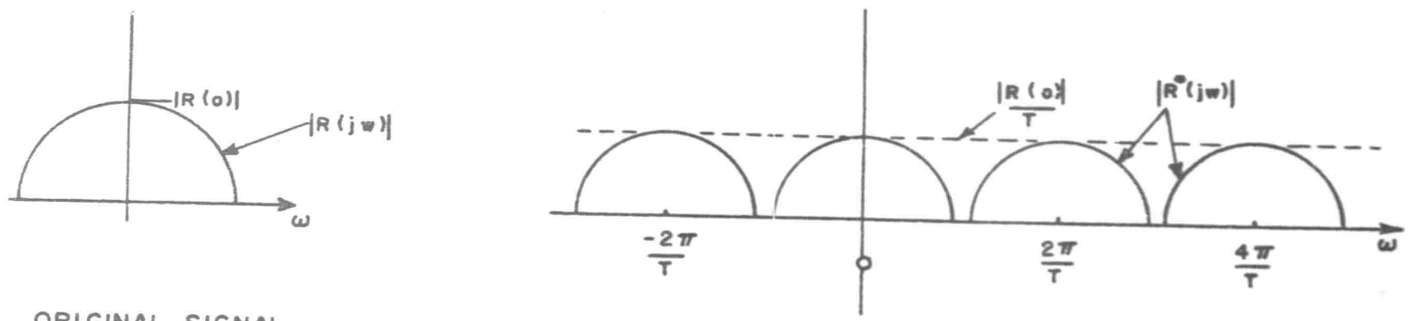

ORIGINAL SIGNAL

SAMPLED SIGNAL

(b) SPECTRUM OF A SAMPLED SIGNAL

THE SAMPLING PROCESS

FIG. 2a,b
MK-12

FIG. 3
MK - 12

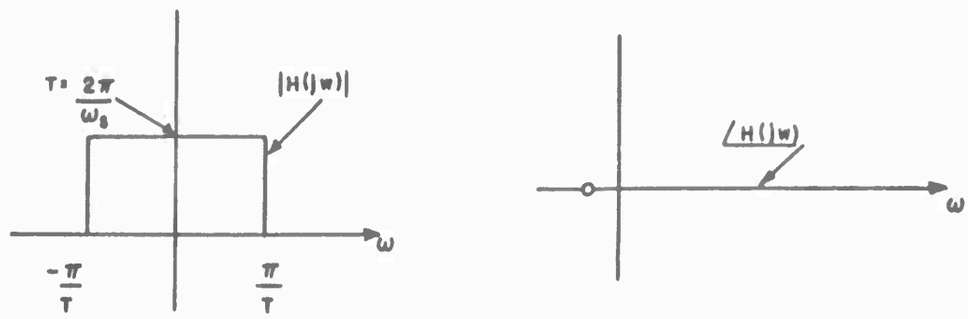

(a) AMPLITUDE (b) PHASE

IDEAL RECOVERY FILTER

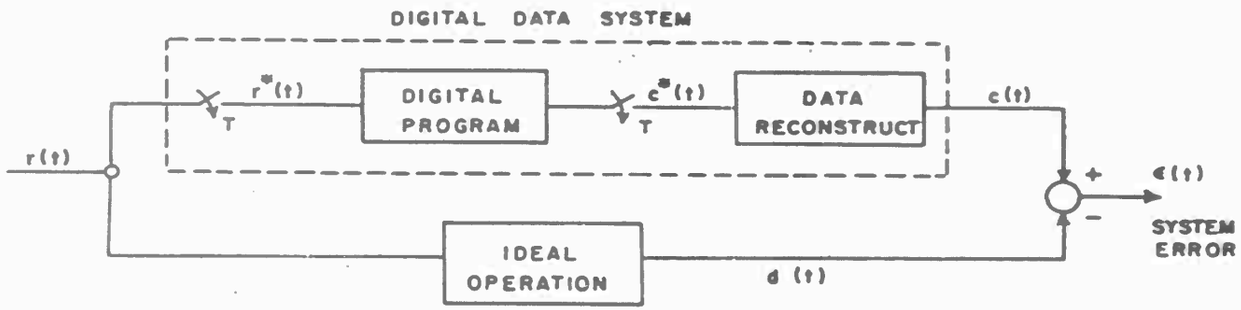

(a) SYSTEM DESIGN PROBLEM

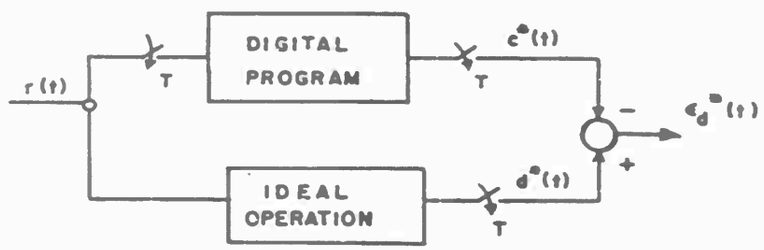

(b) DIGITAL ERROR

ERRORS IN DIGITAL DATA SYSTEMS

FIG. 4ab
MK-12

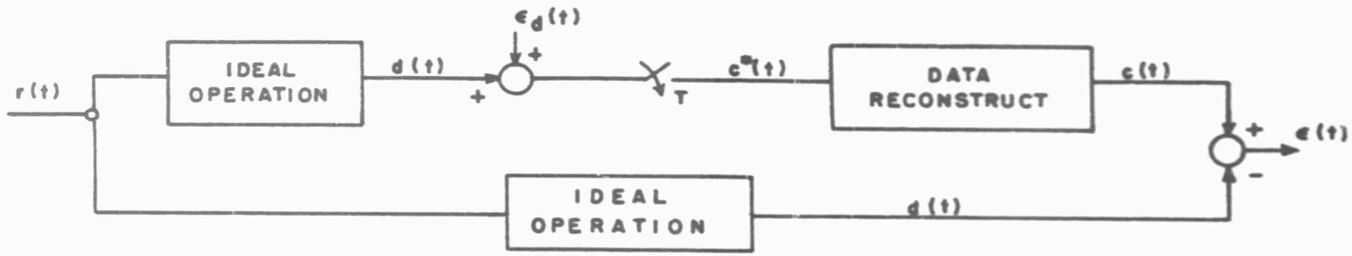

(c) SYSTEM SHOWING DIGITAL ERROR

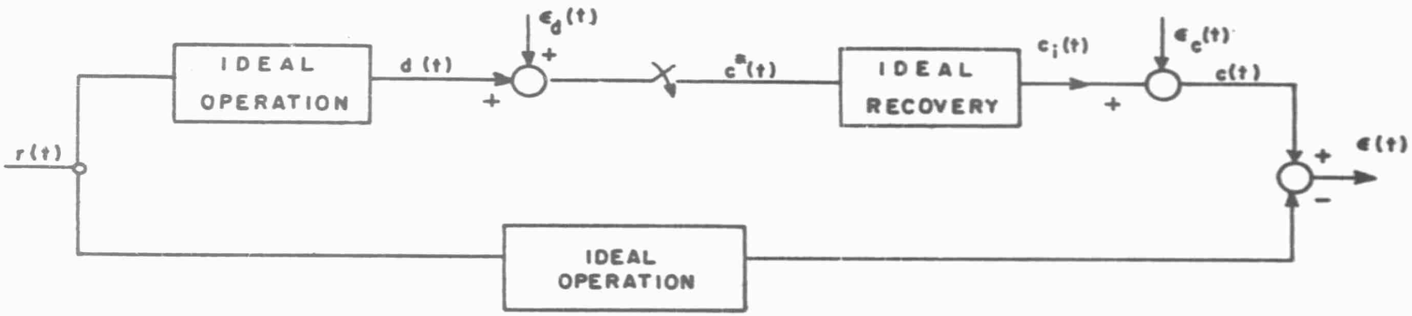

(d) DIGITAL AND RECONSTRUCTION ERRORS

ERRORS IN DIGITAL DATA SYSTEMS

FIG. 4c,d
MK-12

FIG. 5
MK-12

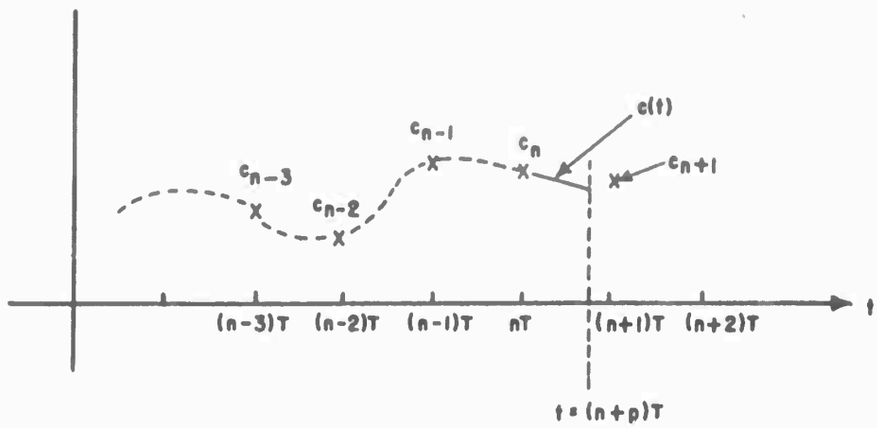

POLYNOMIAL RECONSTRUCTION FILTERS

FIG. 6a,b
MK-12

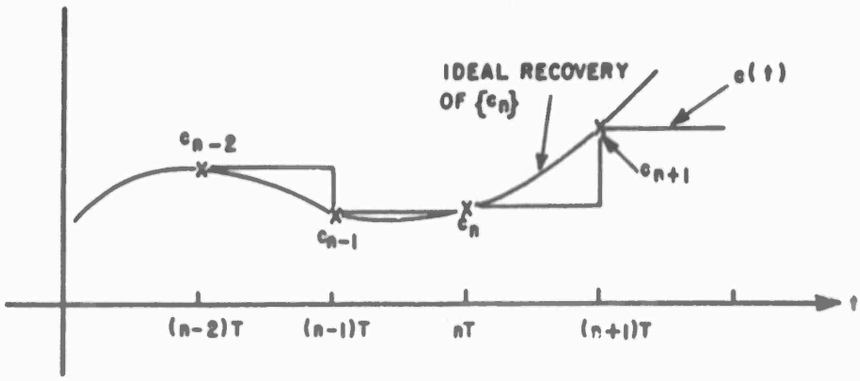

(a) OPERATION

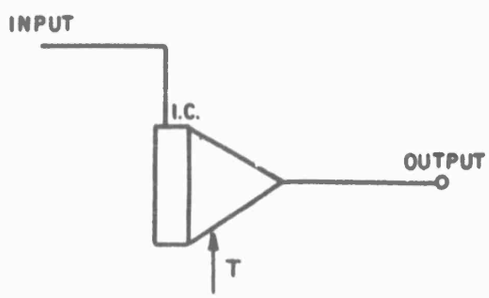

(b) REALIZATION

ZERO-ORDER FILTER

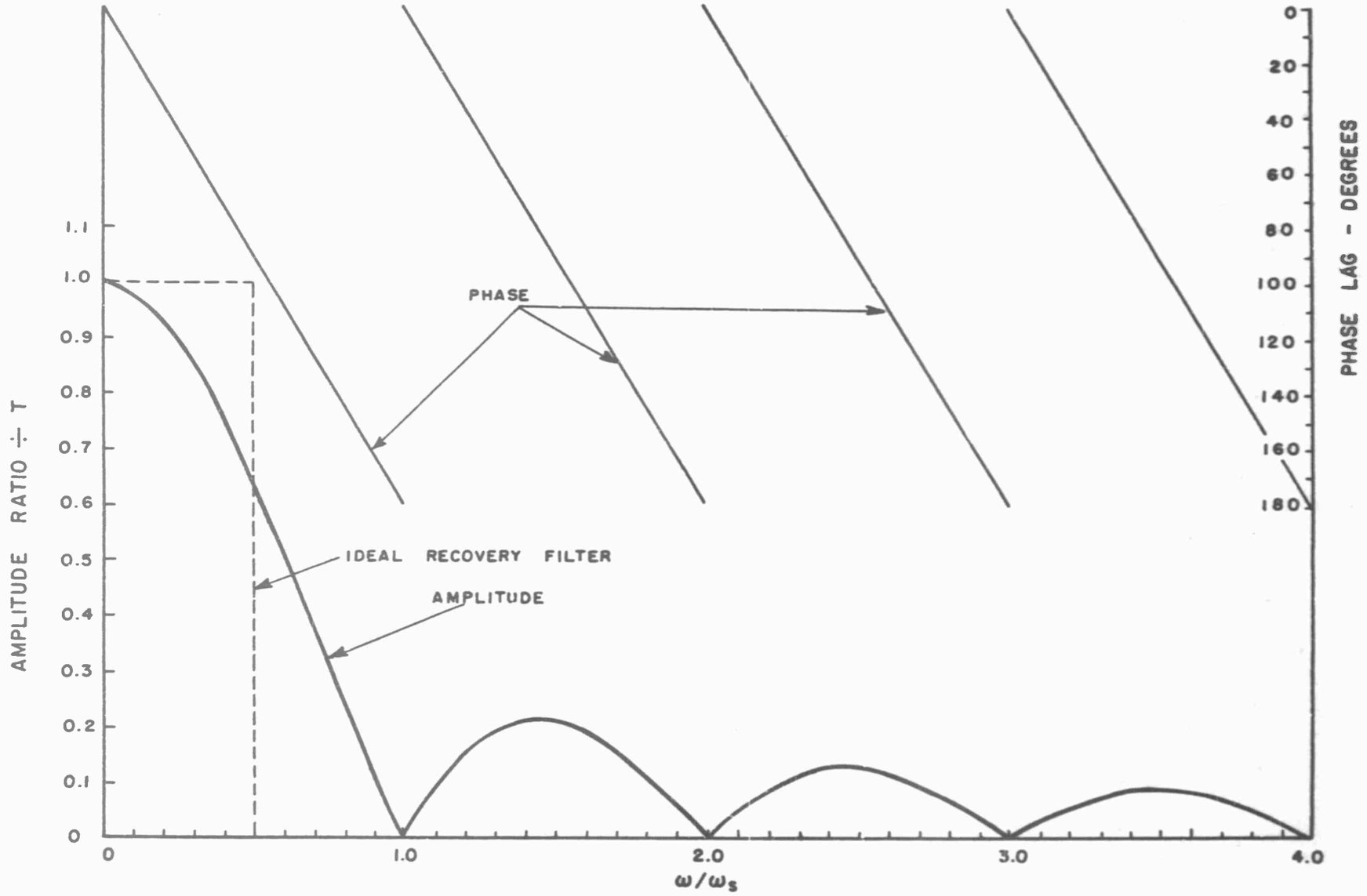

(c) ZERO-ORDER HOLD - FREQUENCY RESPONSE

ZERO-ORDER FILTER

FIG. 6c.
MK-12

FIG 7a,b
MK-12

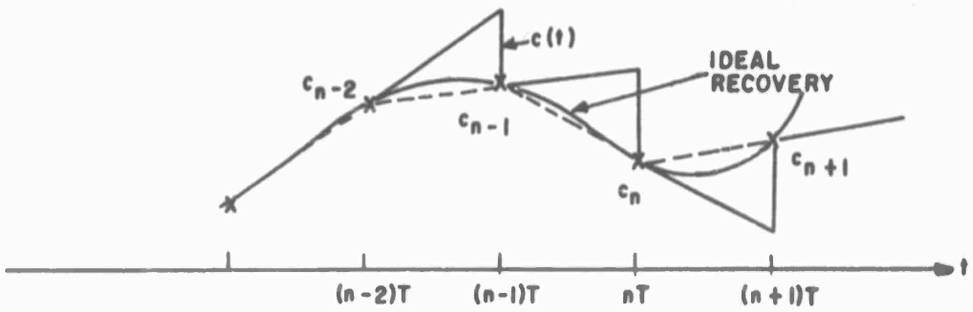

(a) OPERATION

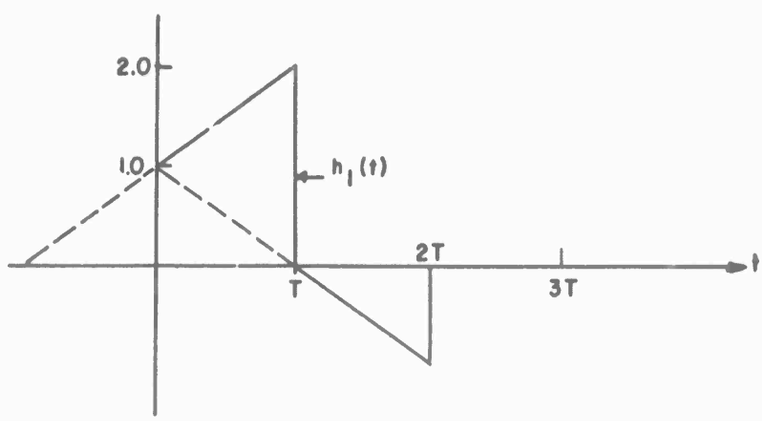

(b) IMPULSE RESPONSE

FIRST-ORDER EXTRAPOLATING FILTER

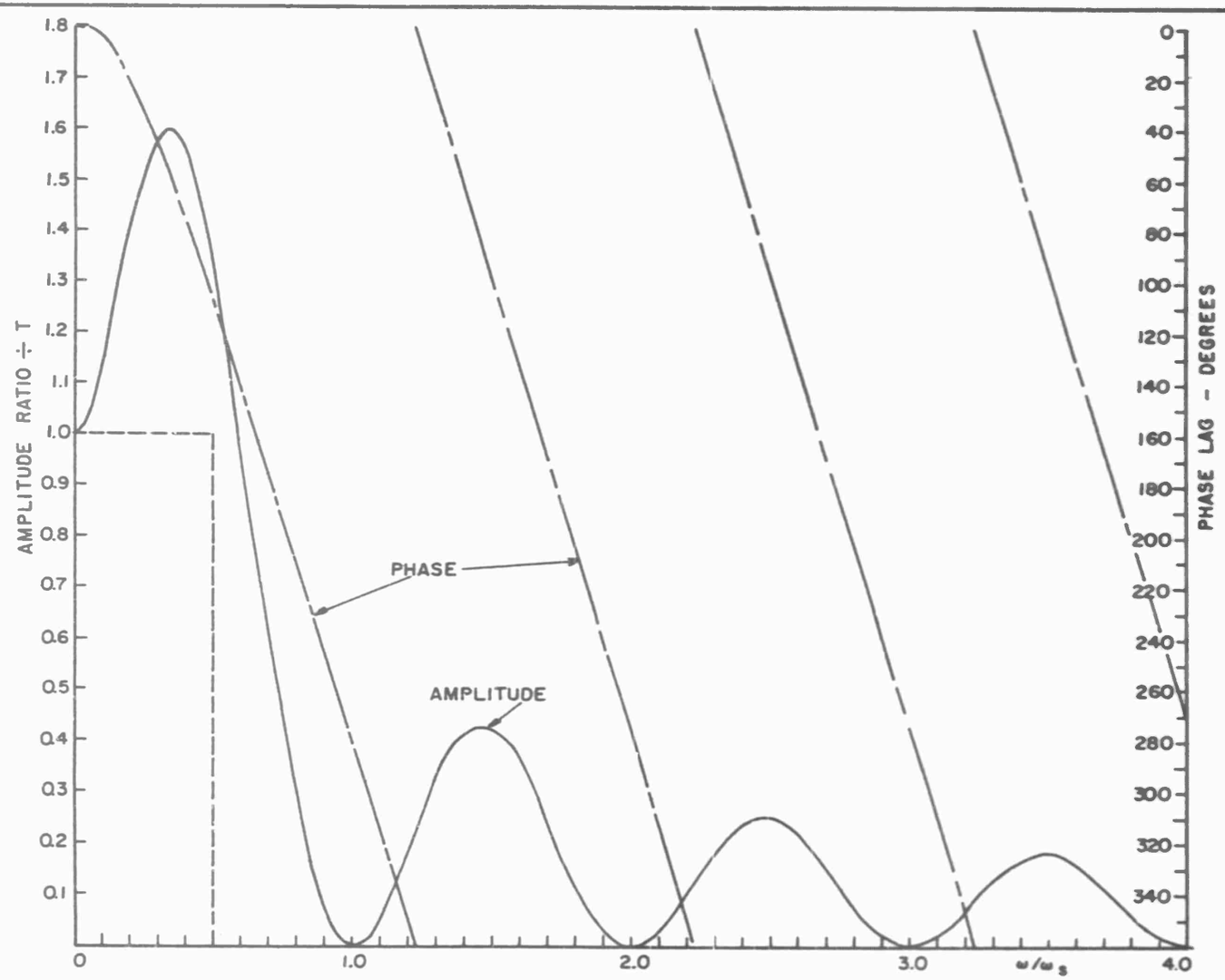

(c) FIRST—ORDER EXTRAPOLATOR (UNSMOOTHED) - FREQUENCY RESPONSE

FIRST-ORDER EXTRAPOLATING FILTER

FIG. 7c
MK-12

FIG. 7d,e
MK-12

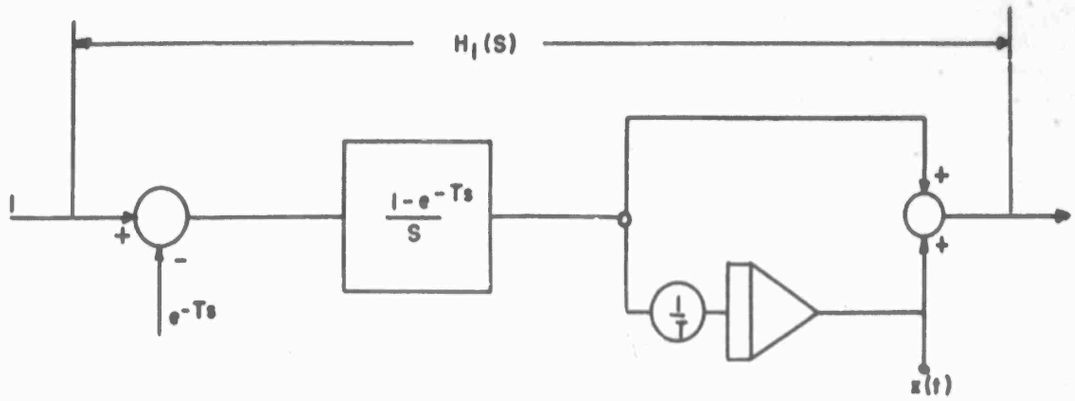

(d) PARTIAL CIRCUIT FOR REALIZATION

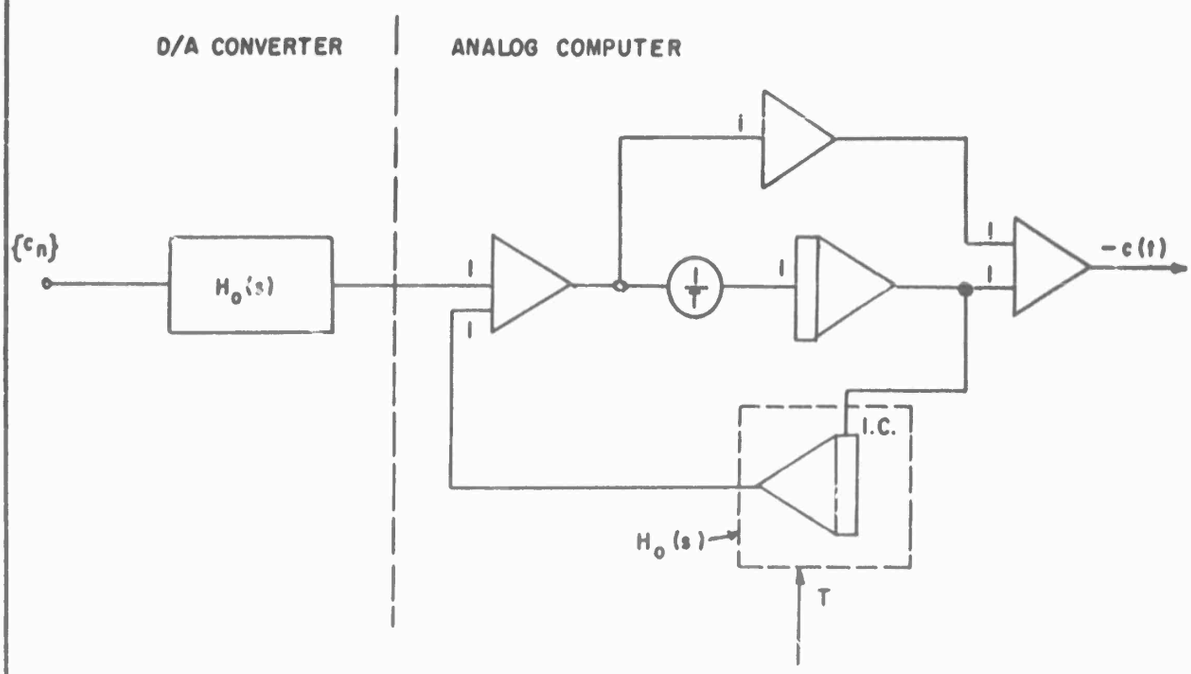

(e) COMPLETE REALIZATION

FIRST-ORDER EXTRAPOLATING FILTER

FIG. 8a,b
MK-12

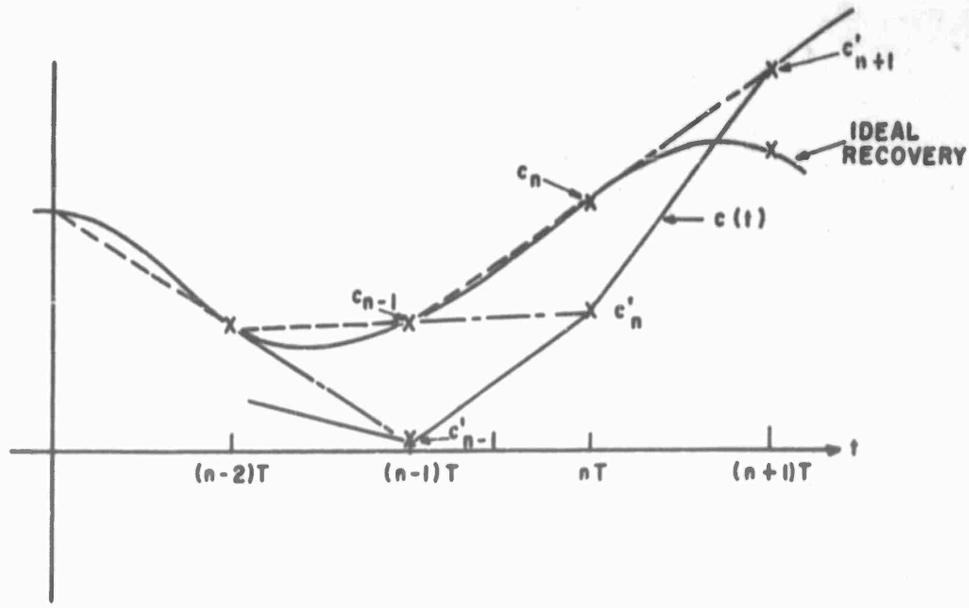

(a) OPERATION

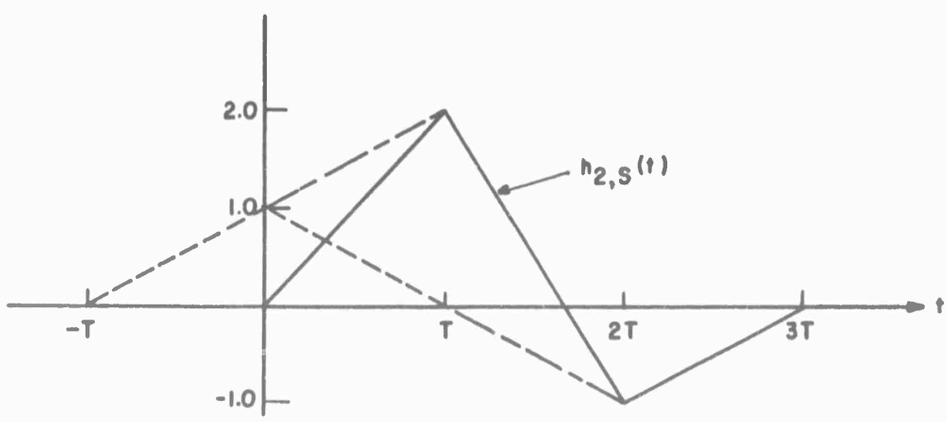

(b) IMPULSE RESPONSE

FIRST-ORDER EXTRAPOLATOR - SMOOTHED

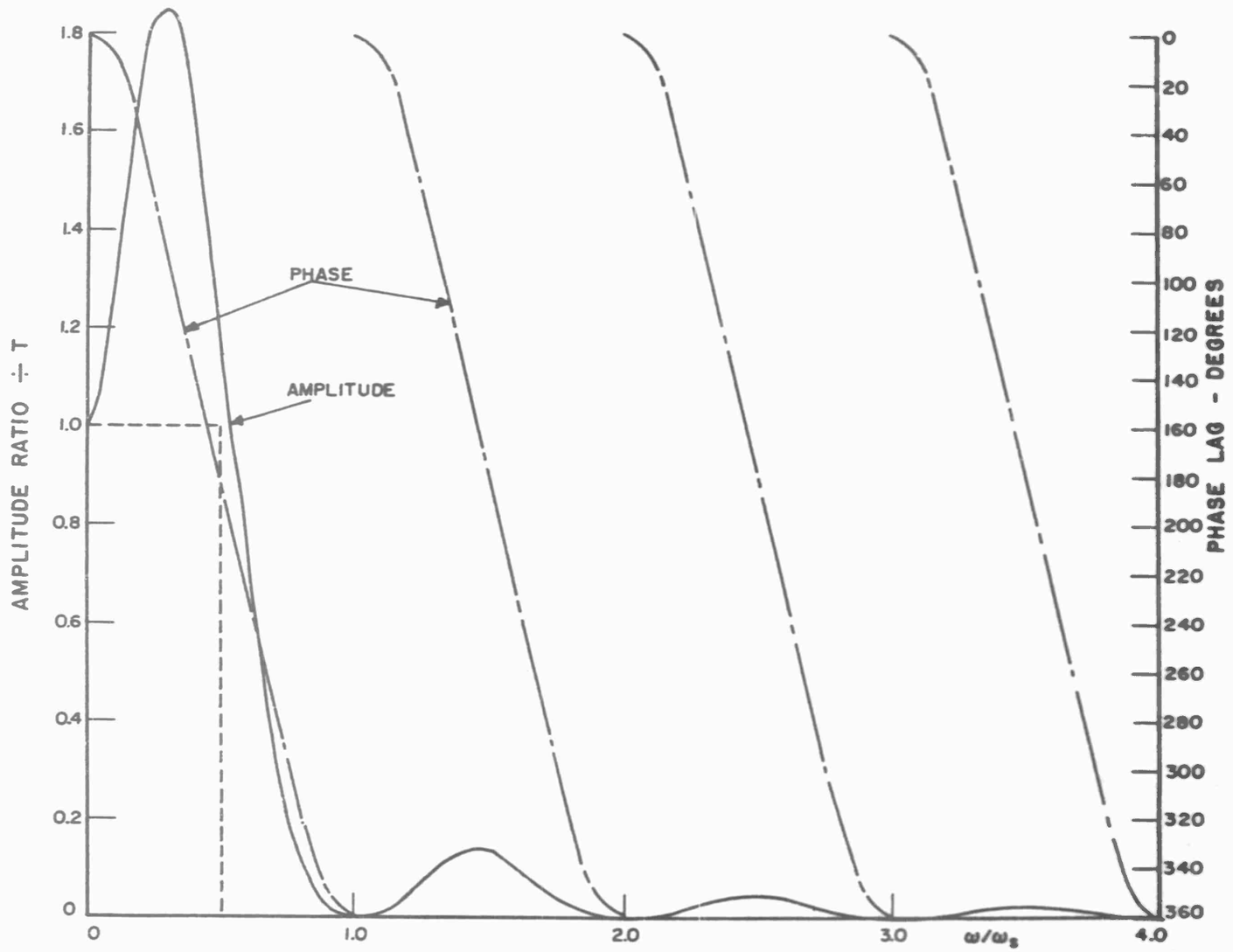

(c) FREQUENCY RESPONSE

FIRST-ORDER EXTRAPOLATOR - SMOOTHED

FIG. 8c
MK-12

FIG. 8d-f
MK-12

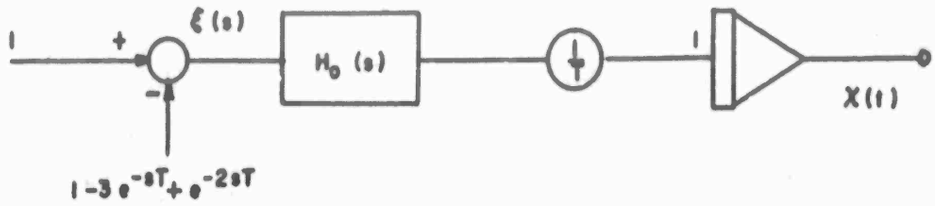

(d) PARTIAL REALIZATION

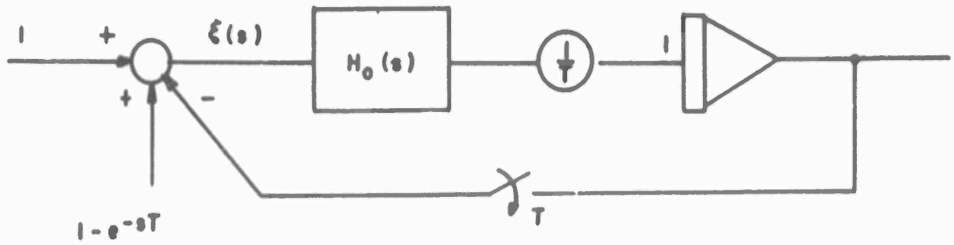

(e) REDUCTION OF FIG. 8 (d)

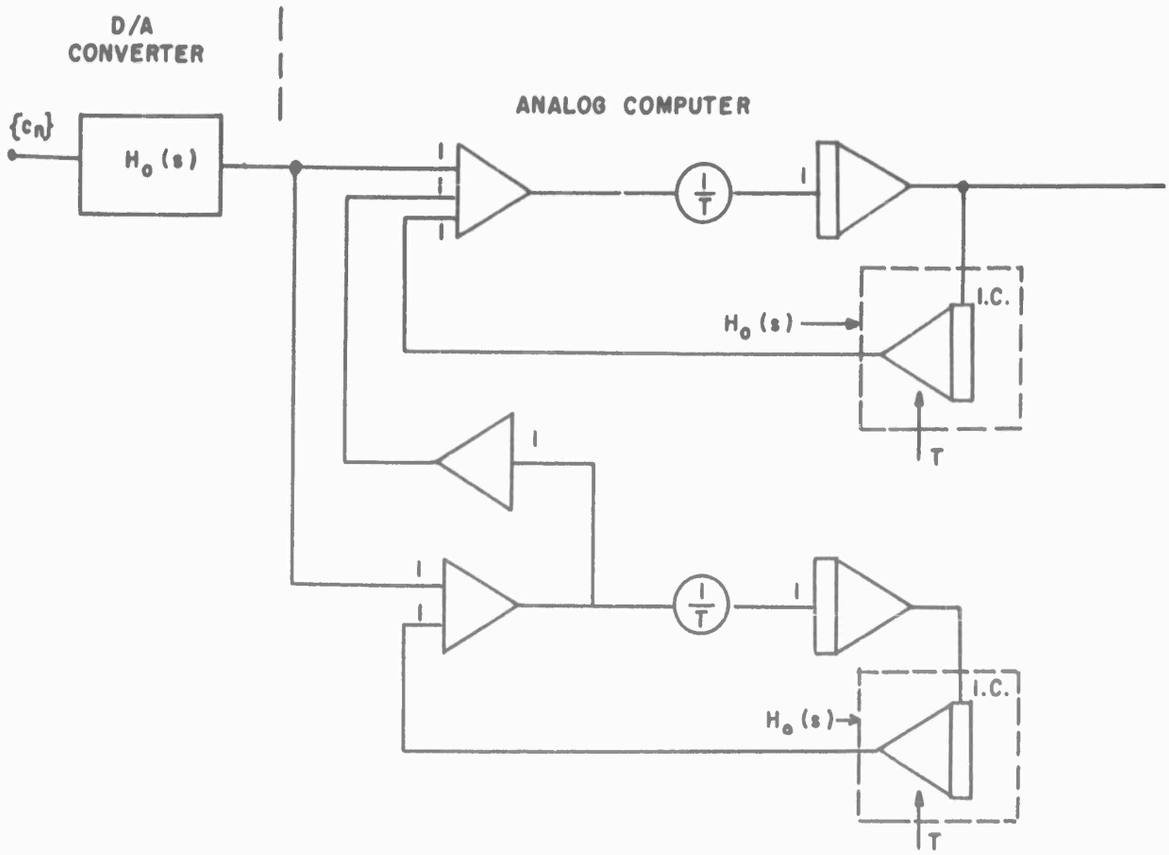

(f) COMPLETE REALIZATION

FIRST-ORDER EXTRAPOLATOR - SMOOTHED

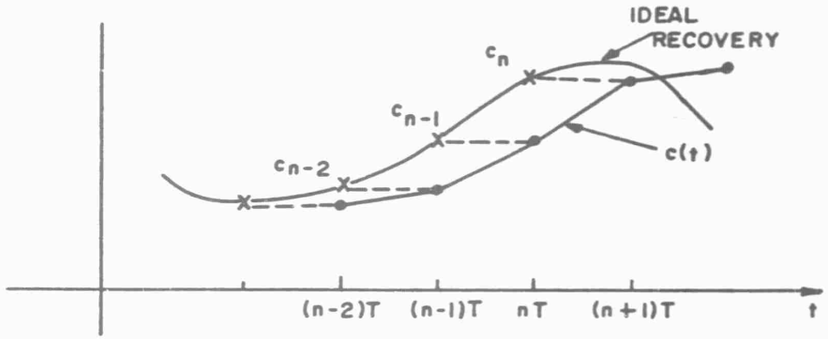

(a) OPERATION

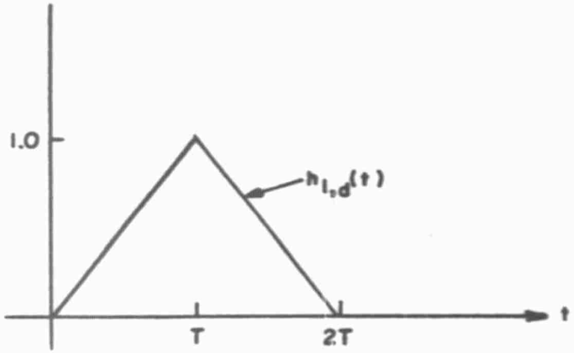

(b) IMPULSE RESPONSE

DELAYED FIRST-ORDER FILTER

FIG. 9 a,b
MK-12

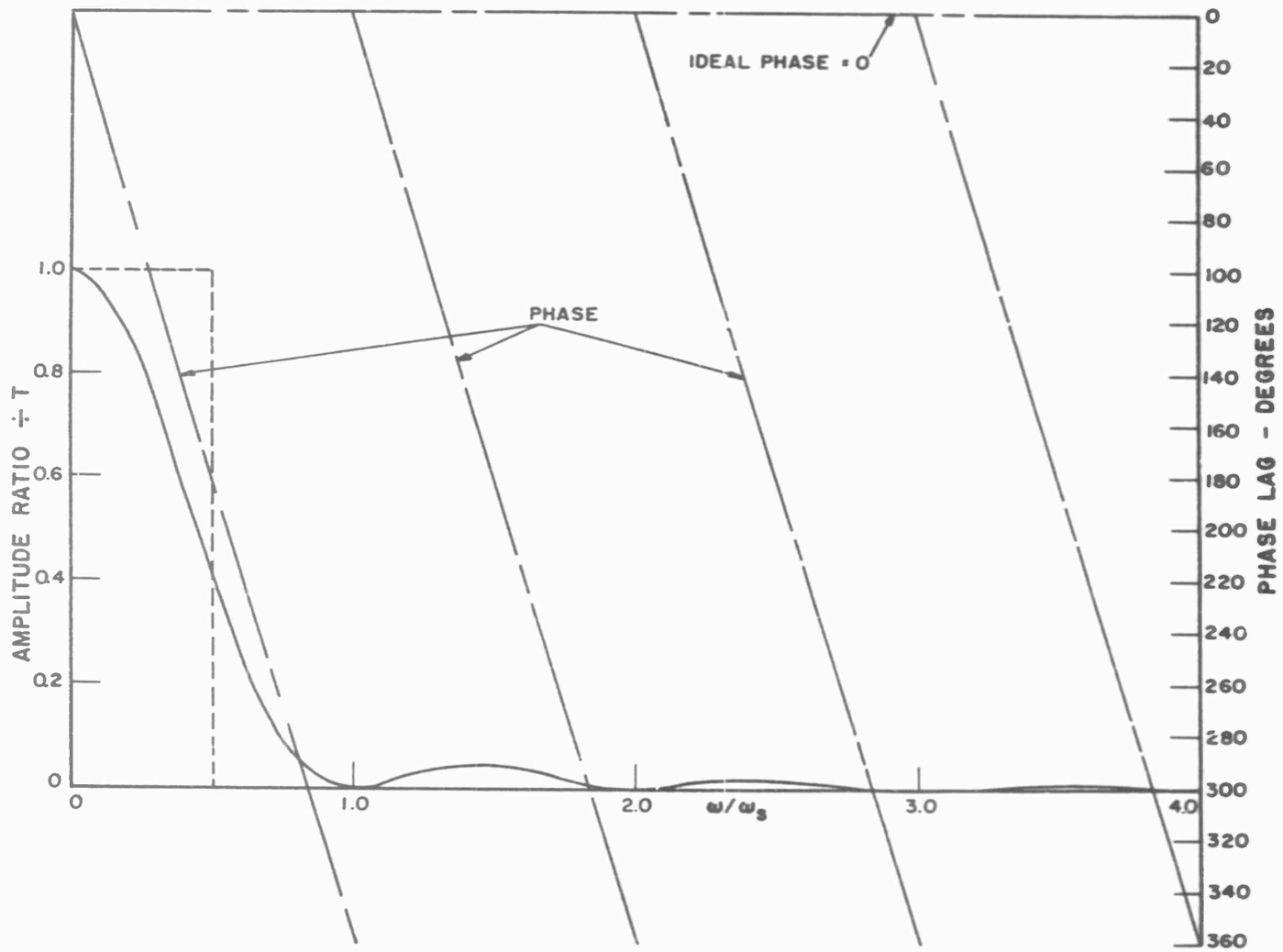

(c) FIRST-ORDER EXTRAPOLATOR DELAYED AND IDEAL - FREQUENCY RESPONSE

DELAYED FIRST-ORDER FILTER

FIG. 9c
MK-12

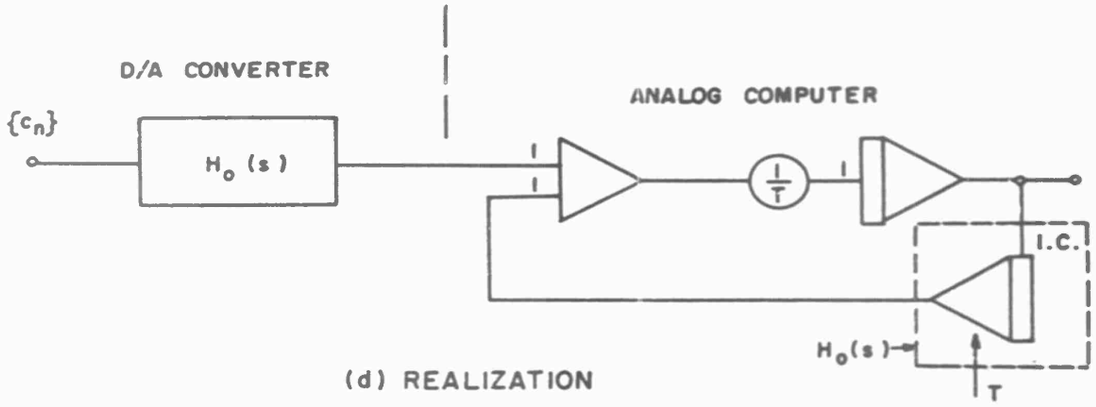

(d) REALIZATION

DELAYED FIRST-ORDER FILTER

FIG. 9d
MK-12

FIG. 10
MK-12

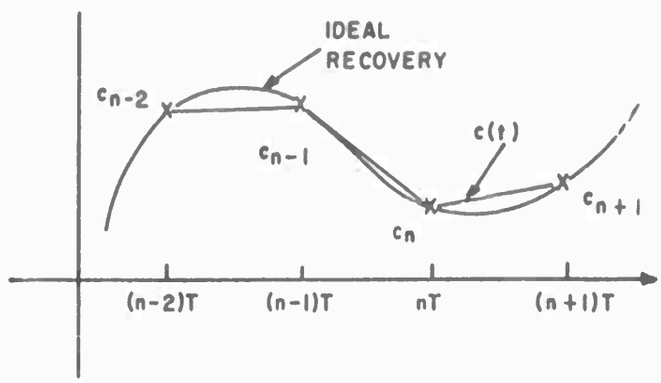

IDEAL FIRST-ORDER FILTER

FIG. 11a
MK-12

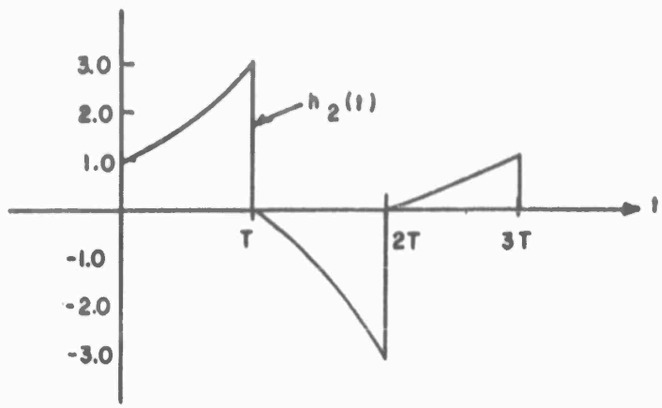

(a) IMPULSE RESPONSE

SECOND-ORDER EXTRAPOLATING FILTER

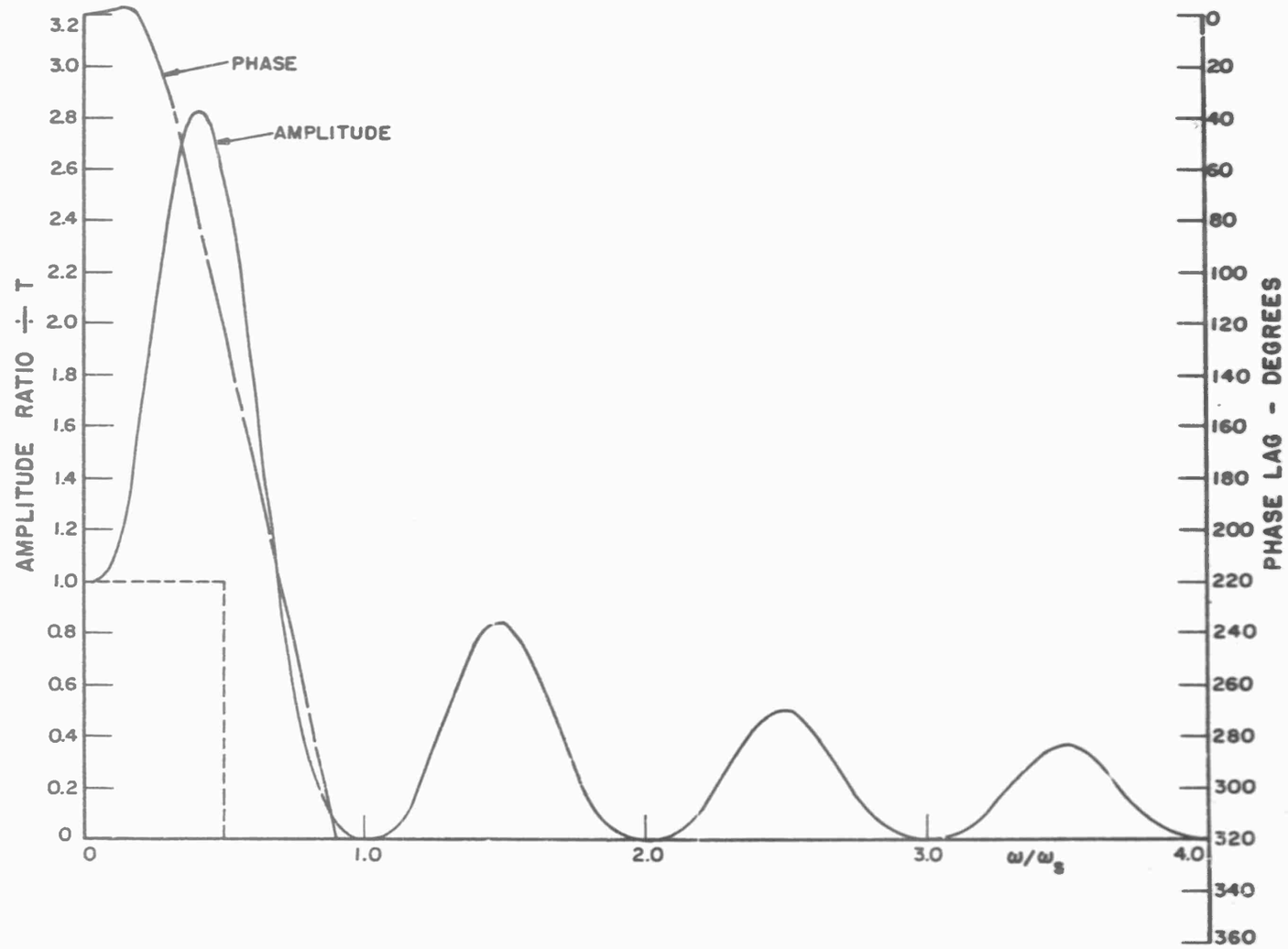

(b) SECOND-ORDER EXTRAPOLATOR (UNSMOOTHED) - FREQUENCY RESPONSE

SECOND-ORDER EXTRAPOLATING FILTER

FIG. 11b
MK-12

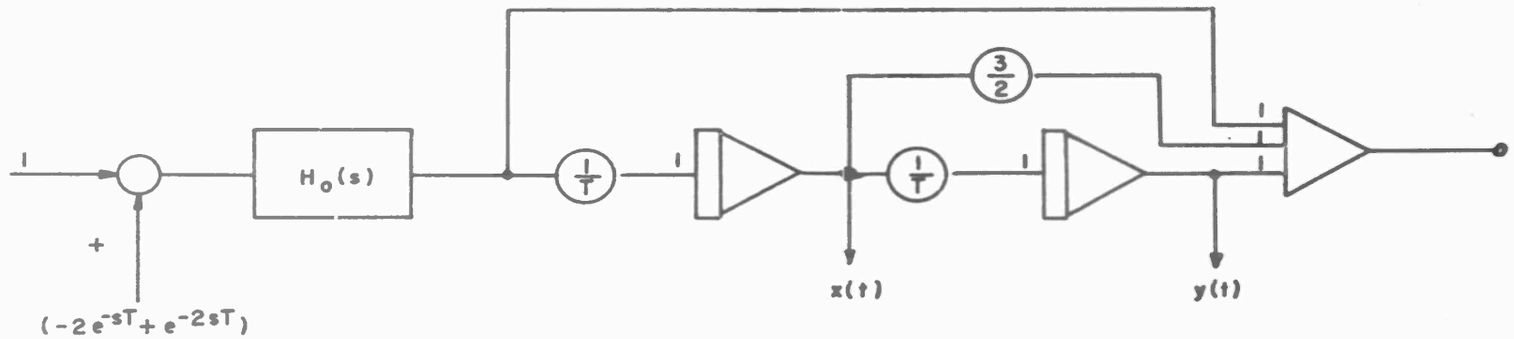

(c) FORM OF REALIZATION

SECOND-ORDER EXTRAPOLATING FILTER

FIG. 11c
MK-12

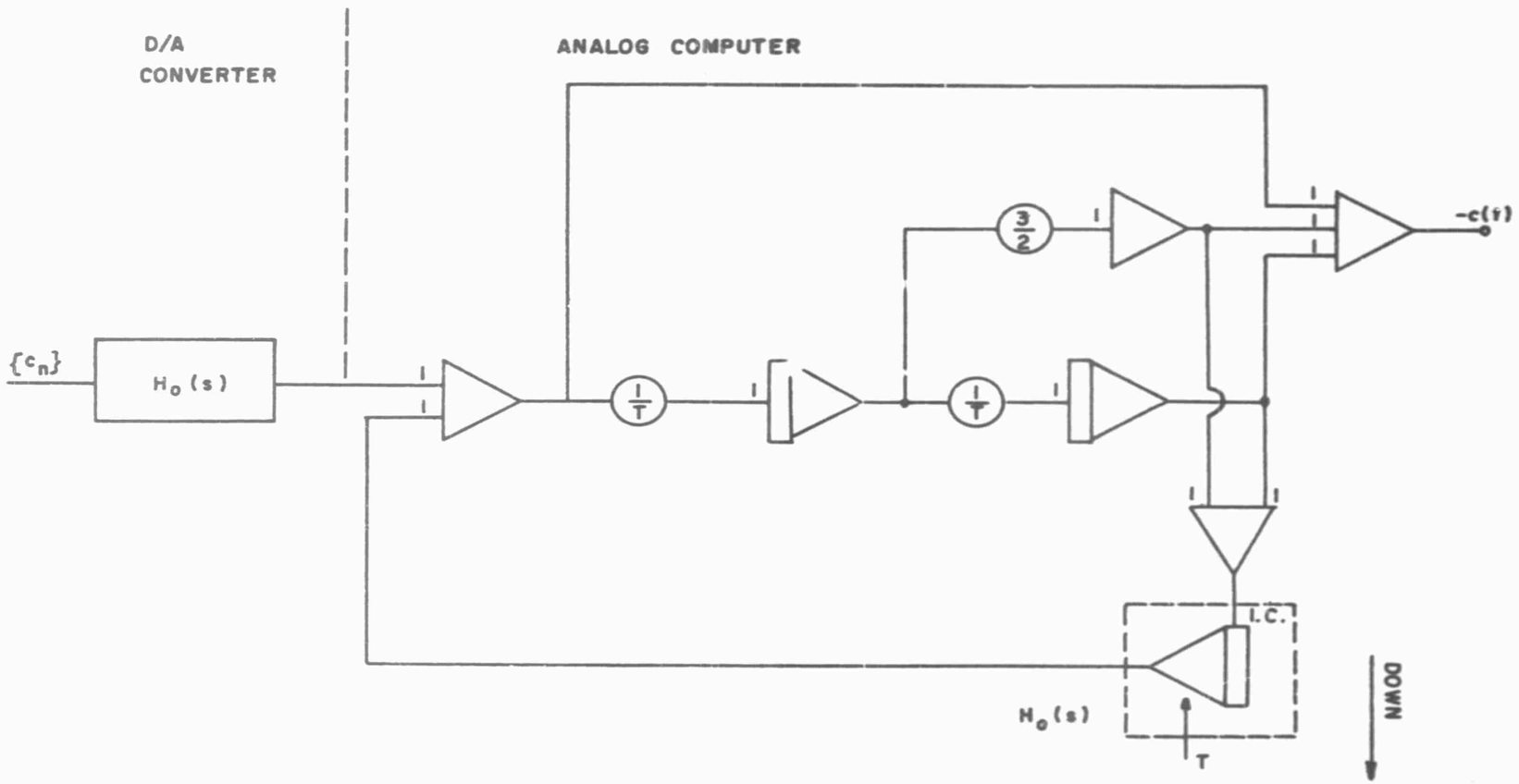

(d) REALIZATION

SECOND-ORDER EXTRAPOLATING FILTER

FIG. 11d
MK-12

FIG. 12a
MK-12

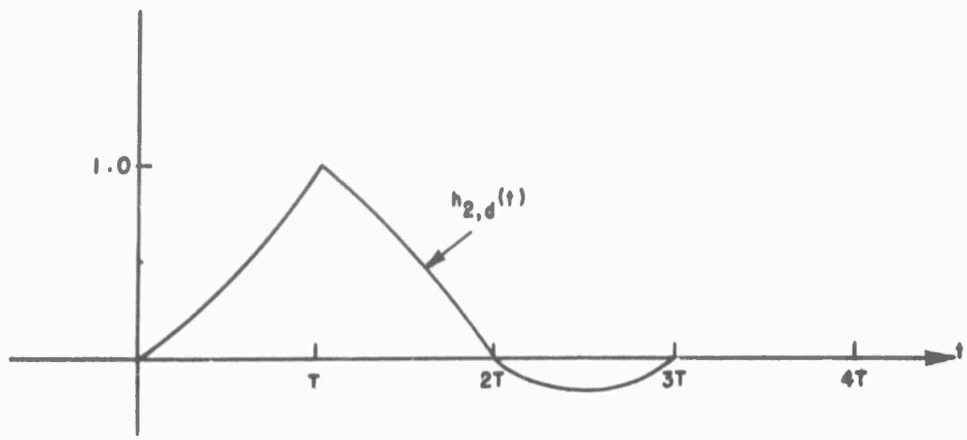

(a) IMPULSE RESPONSE

DELAYED SECOND-ORDER FILTER

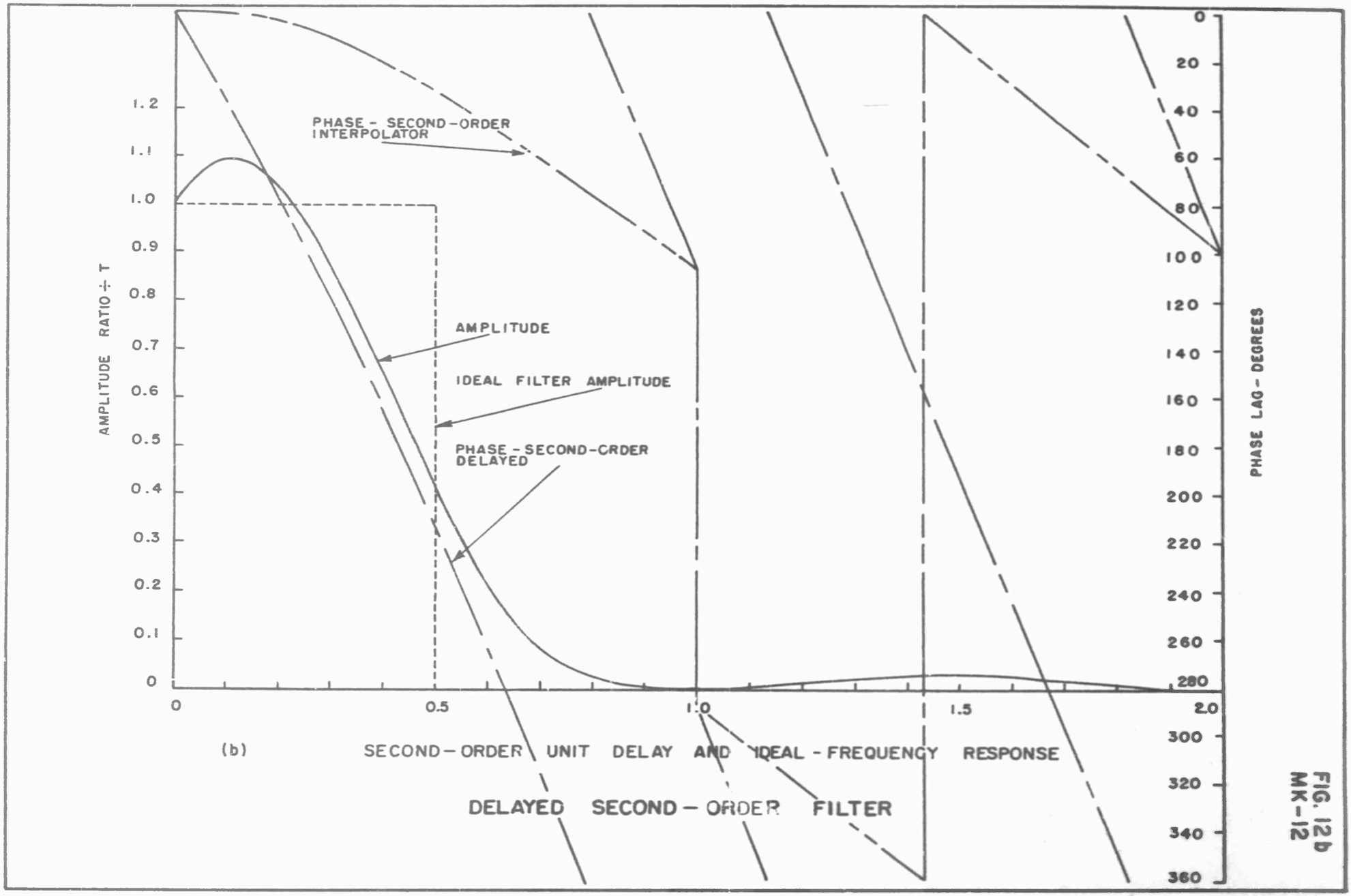
AMPLITUDE RATIO ÷ T
1.2
1.1
1.0
0.9
0.8
0.7
0.6
0.5
0.4
0.3
0.2
0.1
0
PHASE - SECOND-ORDER INTERPOLATOR
AMPLITUDE
IDEAL FILTER AMPLITUDE
PHASE - SECOND-ORDER DELAYED
0
0.5
1.0
1.5
2.0
PHASE LAG - DEGREES
0
20
40
60
80
100
120
140
160
180
200
220
240
260
280
300
320
340
360
(b)
SECOND-ORDER UNIT DELAY AND IDEAL-FREQUENCY RESPONSE
DELAYED SECOND-ORDER FILTER

FIG. 12b
MK-12

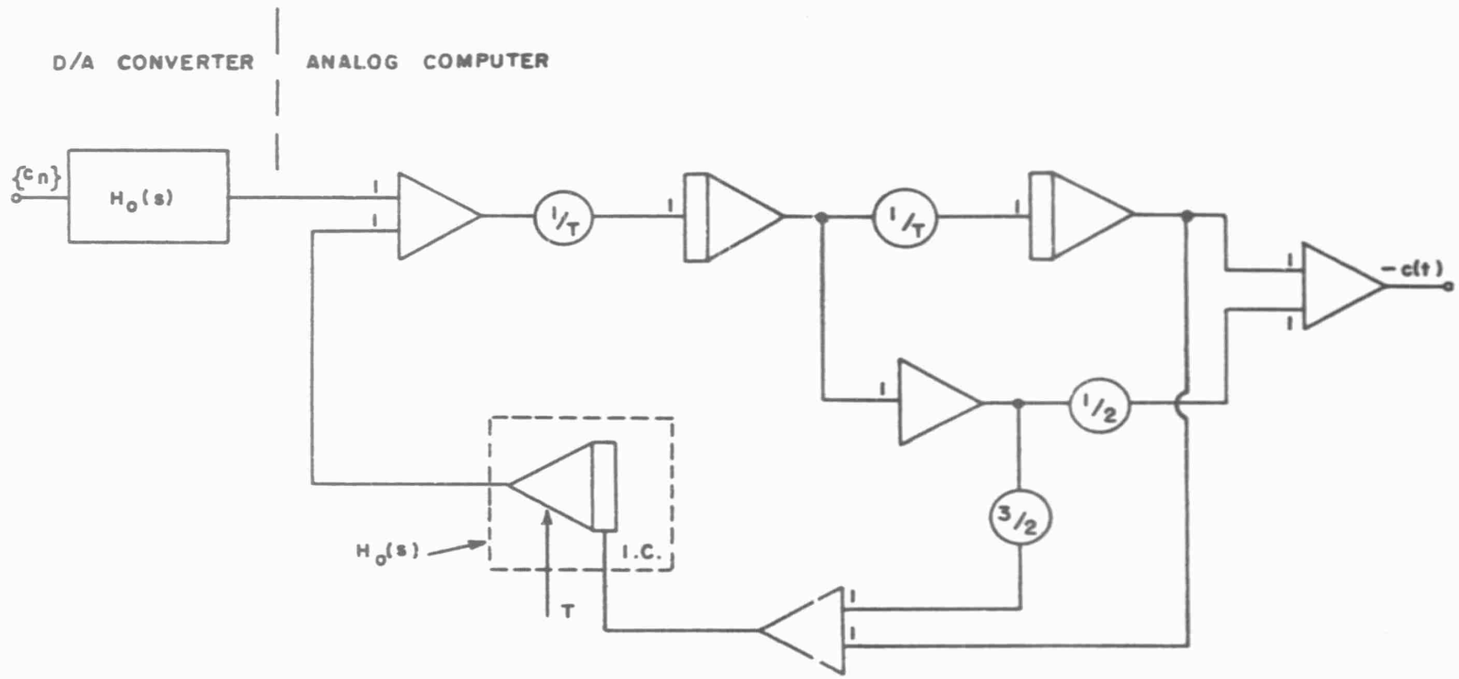

(c) REALIZATION

DELAYED SECOND - ORDER FILTER

FIG. 12 c
MK -12

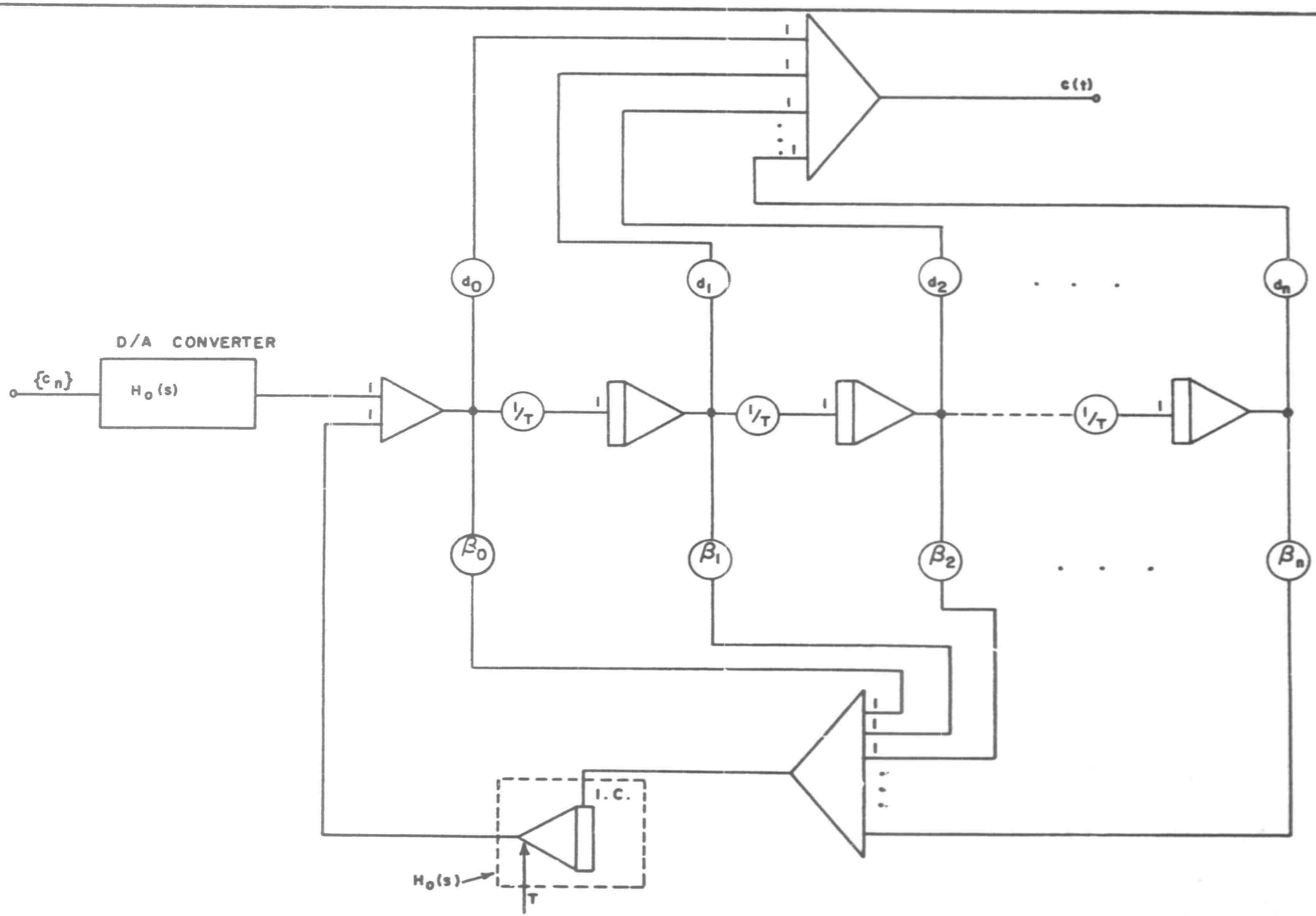

GENERAL N^{th}- ORDER POLYNOMIAL FILTER

FIG. 13
MK-12

FIG. 14a
MK-12

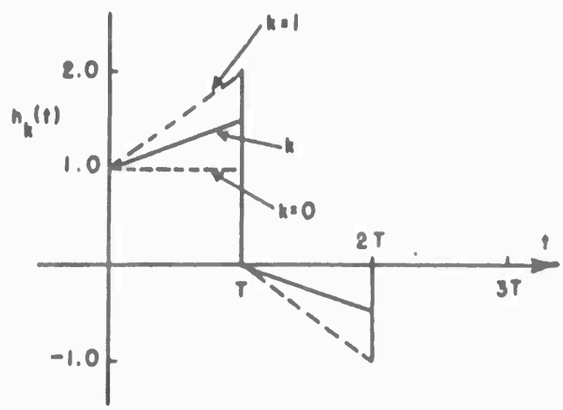

(a) IMPULSE RESPONSE

FRACTIONAL-ORDER HOLD

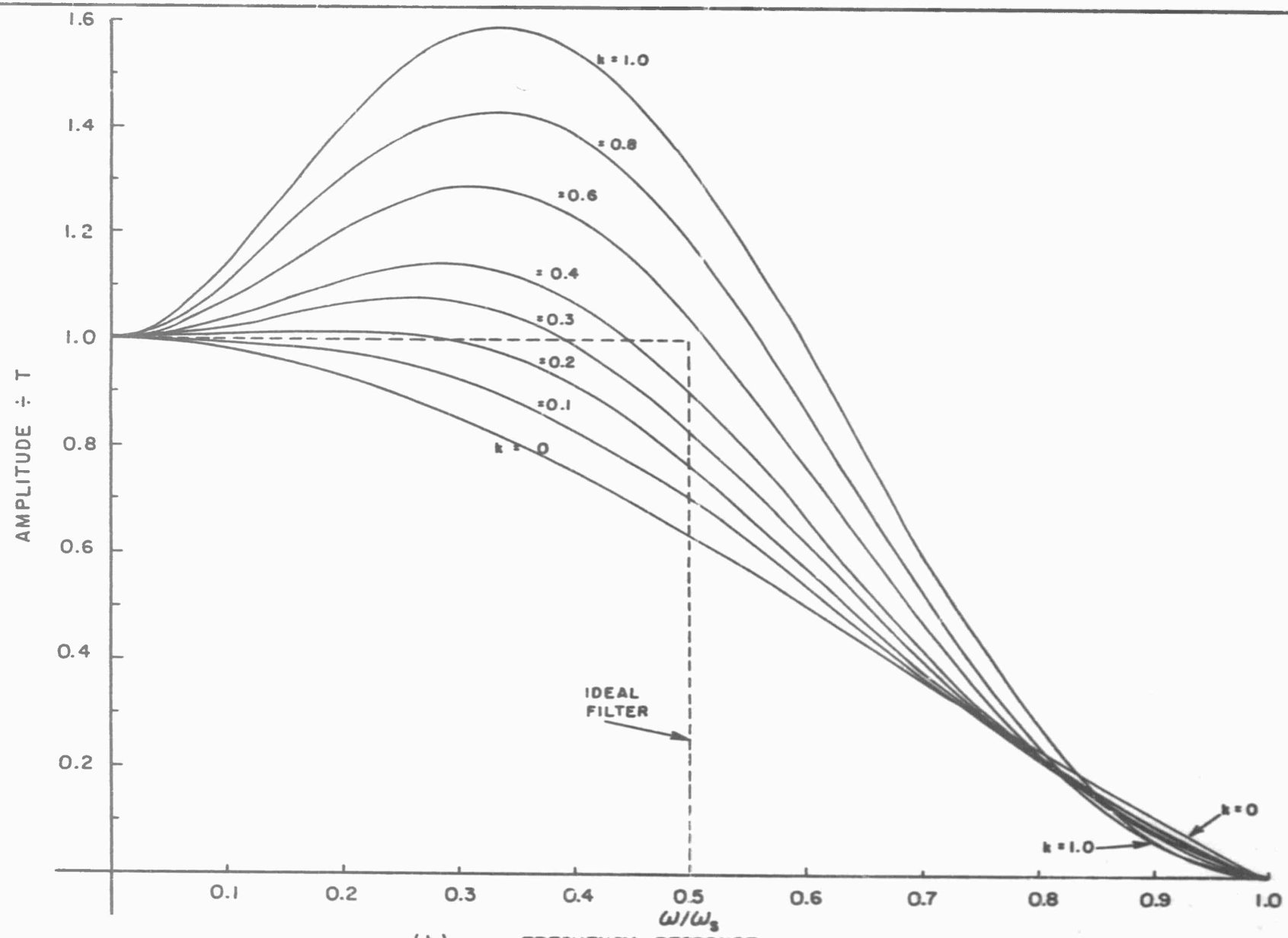

(b) FREQUENCY RESPONSE

FRACTIONAL-ORDER HOLD

FIG. 14b
MK-12

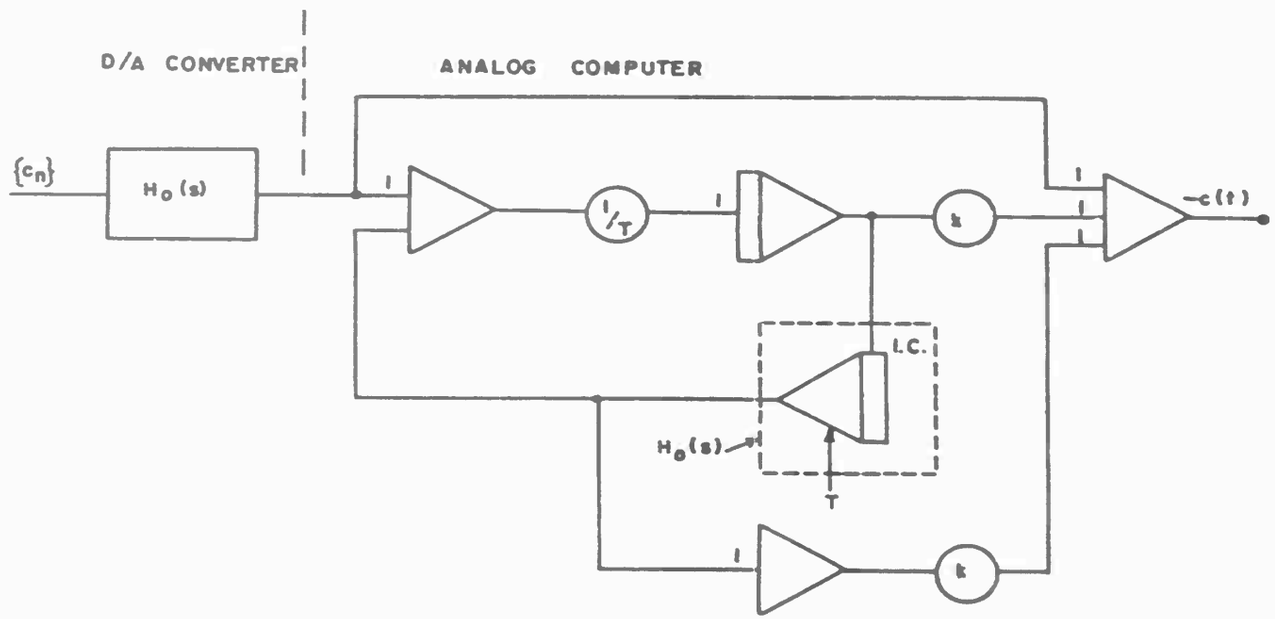

(c) REALISATION

FRACTIONAL-ORDER HOLD

FIG. 14c
MK-12

FIG. 15
MK-12

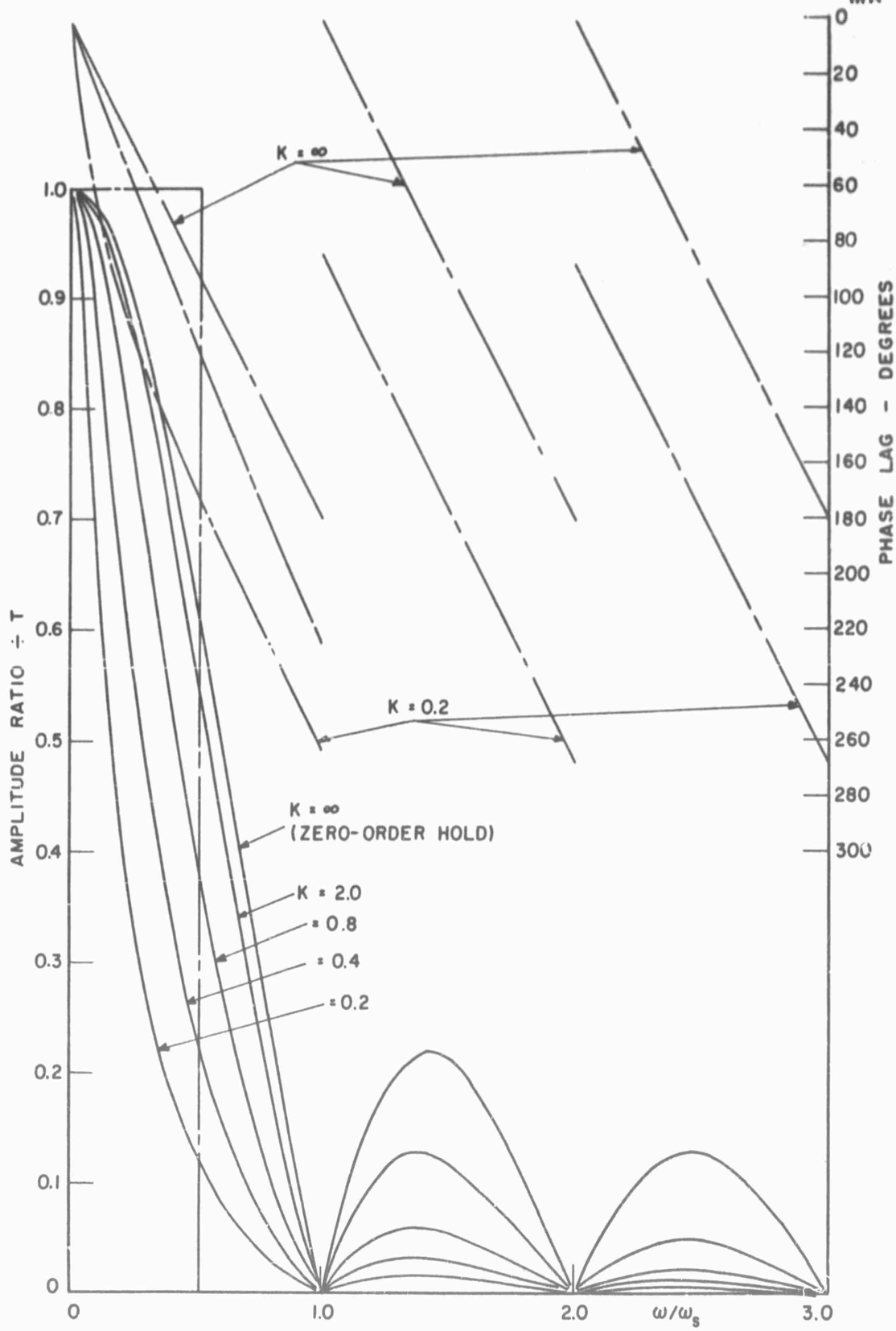

FIRST-ORDER EXPONENTIAL
FREQUENCY RESPONSE

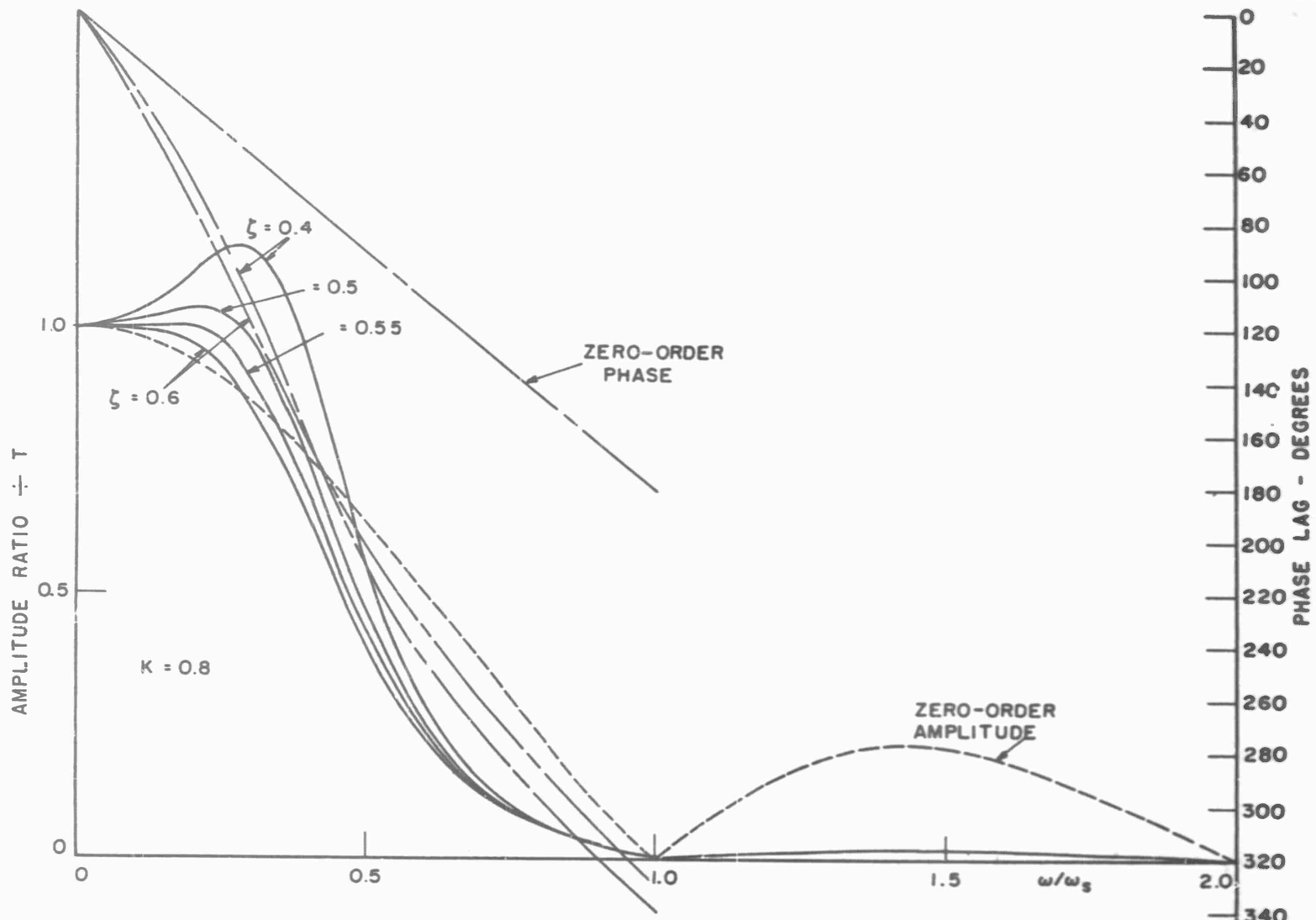

(a) SECOND-ORDER EXPONENTIAL - FREQUENCY RESPONSE

$\frac{2\omega_n}{\omega_s} = 0.0$

FIG. 16a
MK - 12

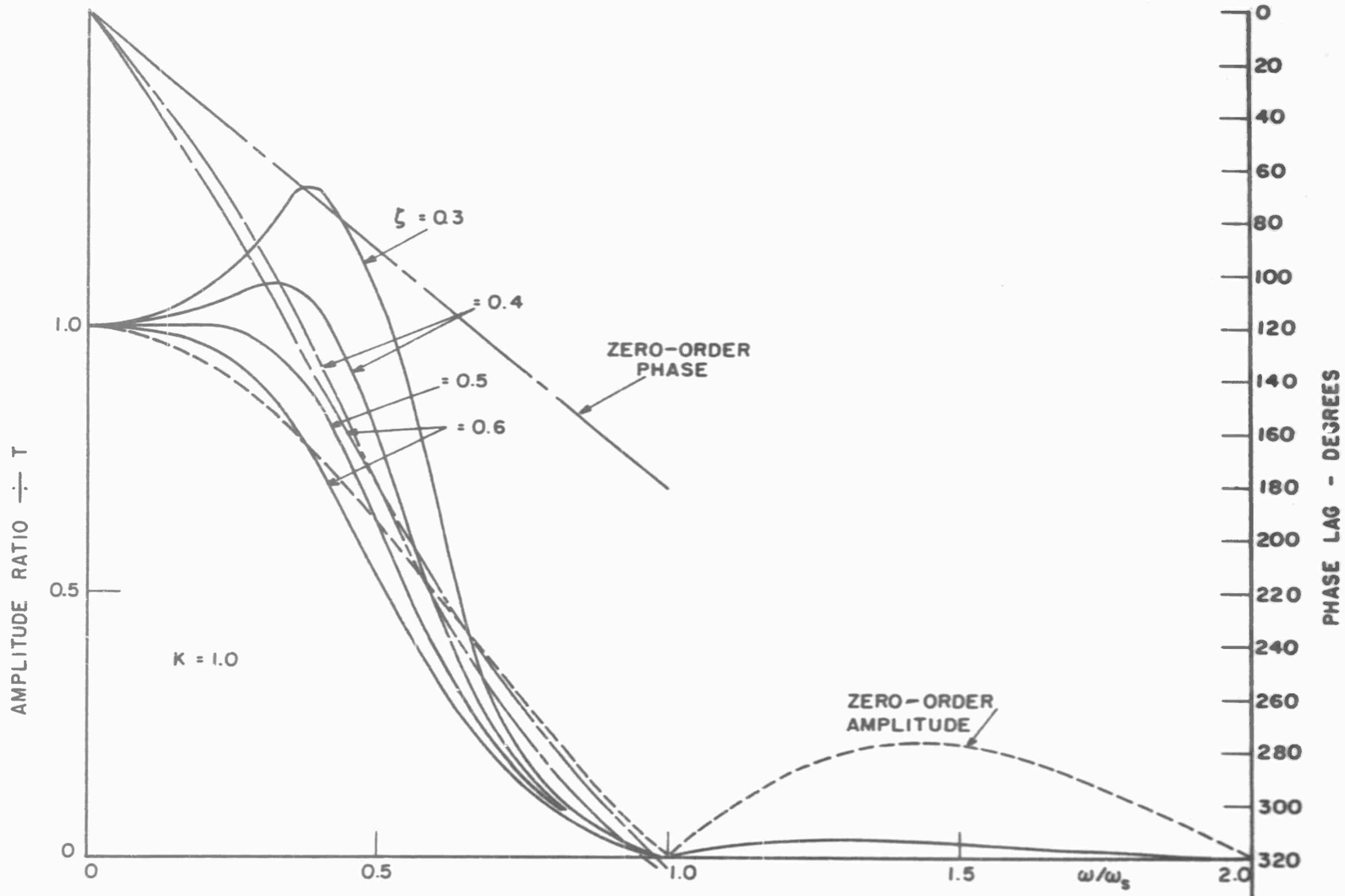

(b) SECOND-ORDER EXPONENTIAL - FREQUENCY RESPONSE

$$\frac{2\omega_n}{\omega_s} = 1.0$$

FIG. 16b
MK-12

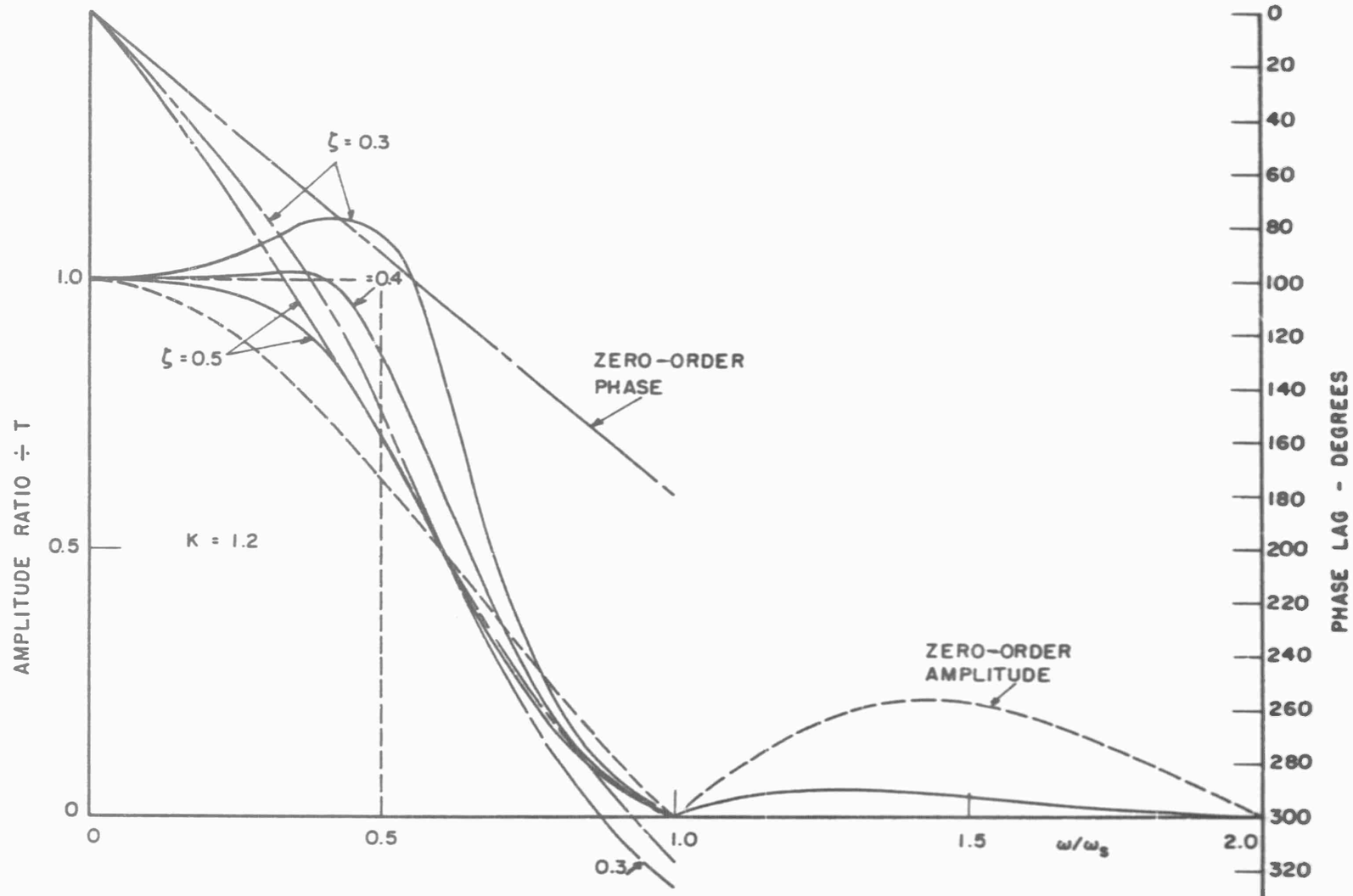

(c) SECOND-ORDER EXPONENTIAL - FREQUENCY RESPONSE

$$\frac{2\omega_n}{\omega_s} = 1.2$$

FIG. 16c
MK - 12

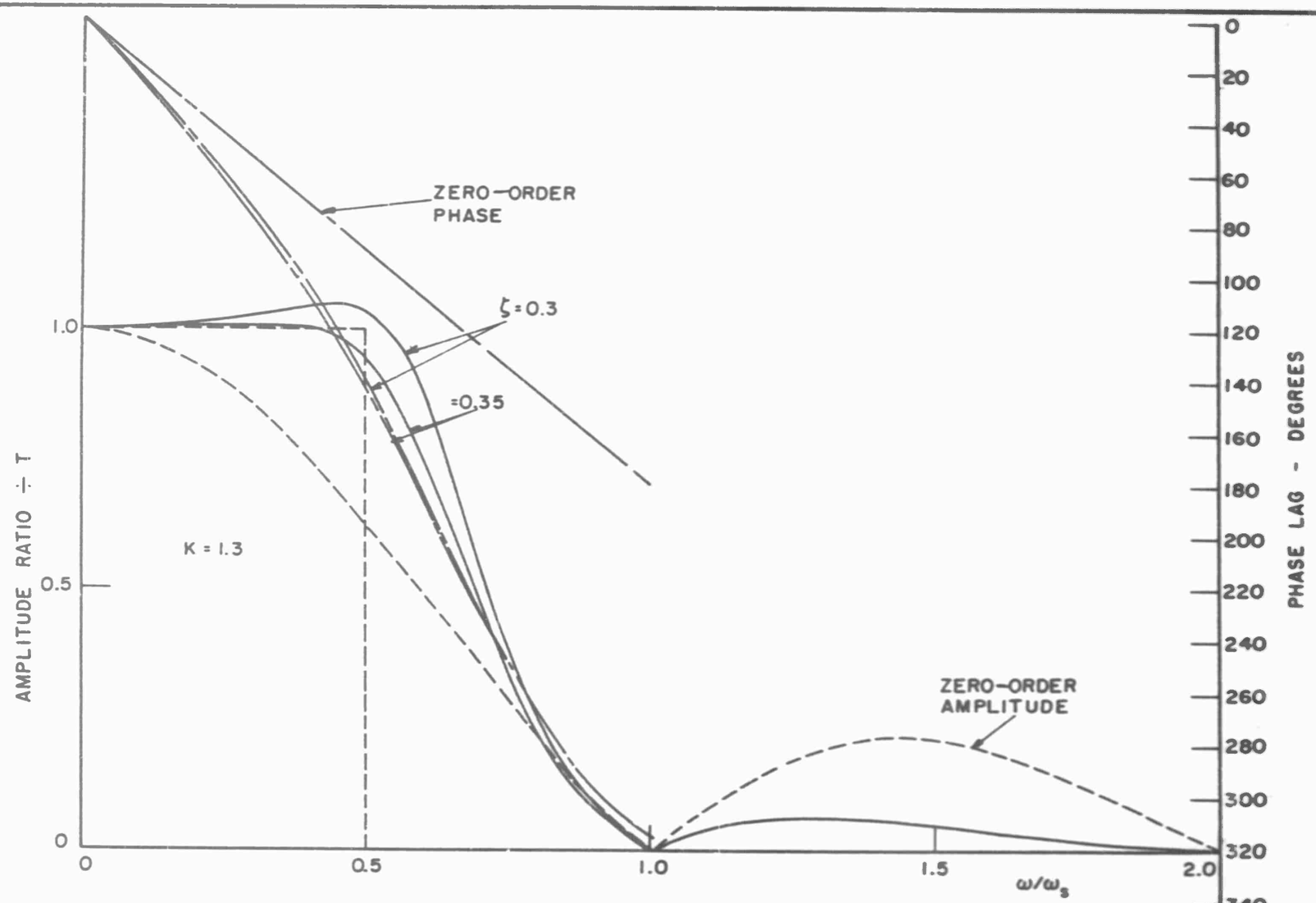

(d) SECOND-ORDER EXPONENTIAL - FREQUENCY RESPONSE

$$\frac{2\omega_n}{\omega_s} = 1.3$$

FIG. 16d
MK - 12

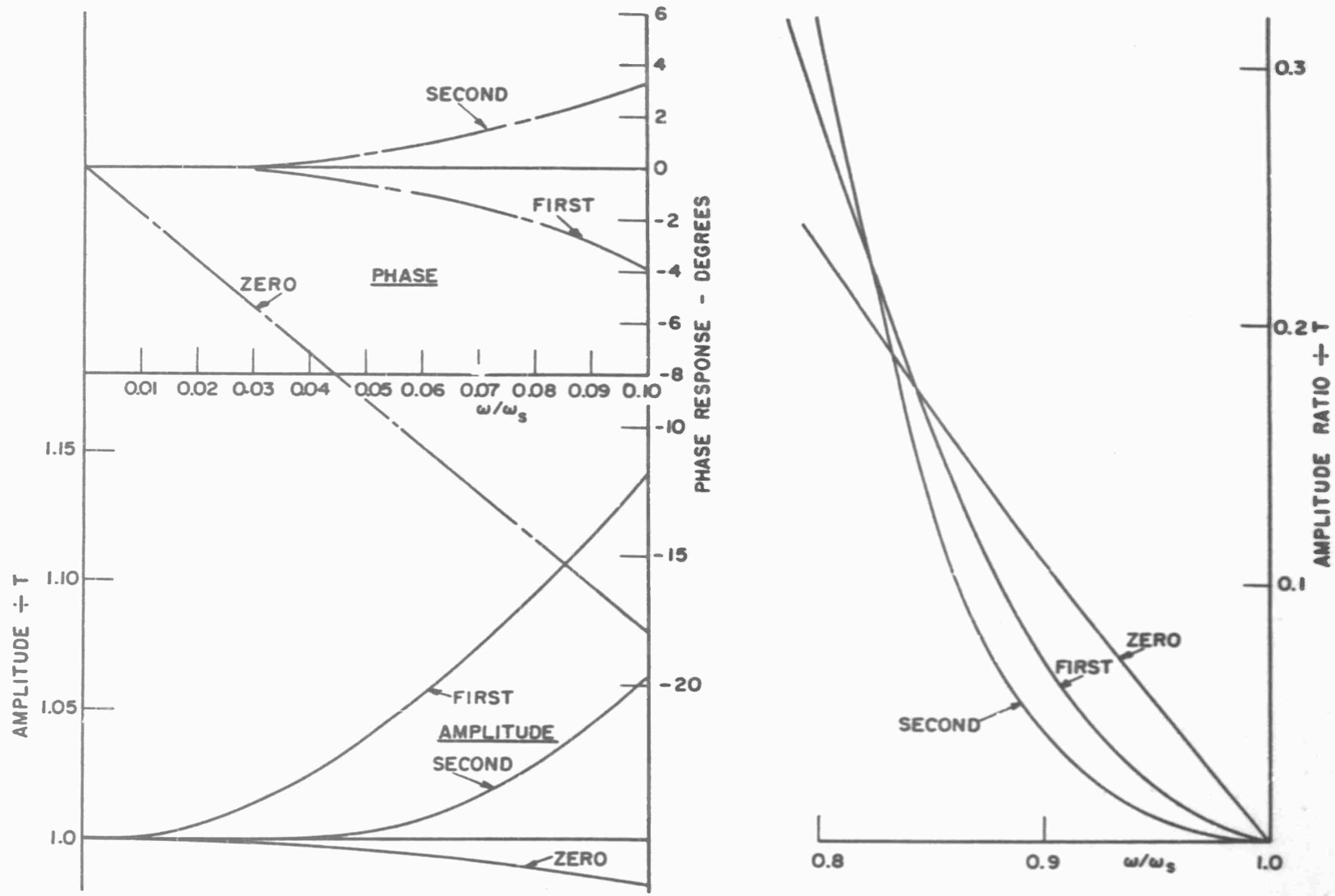

COMPARISON OF FIRST-, SECOND-AND ZERO-ORDER FILTERS

FIG. 17
MK-12

FIG. 18
MK-12

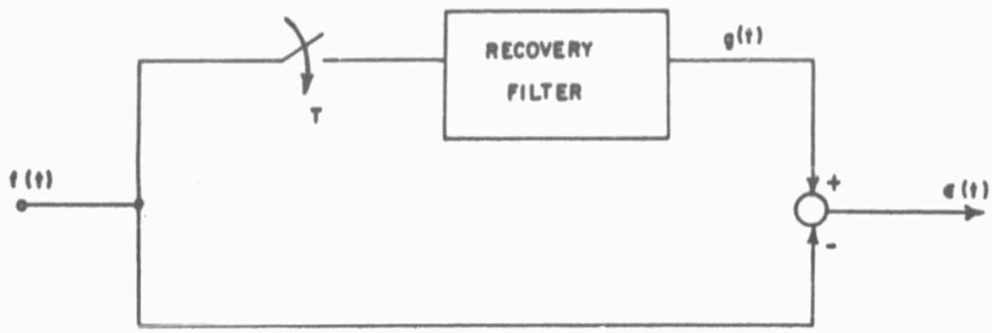

RECONSTRUCTION ERROR

FIG. 19
MK-12

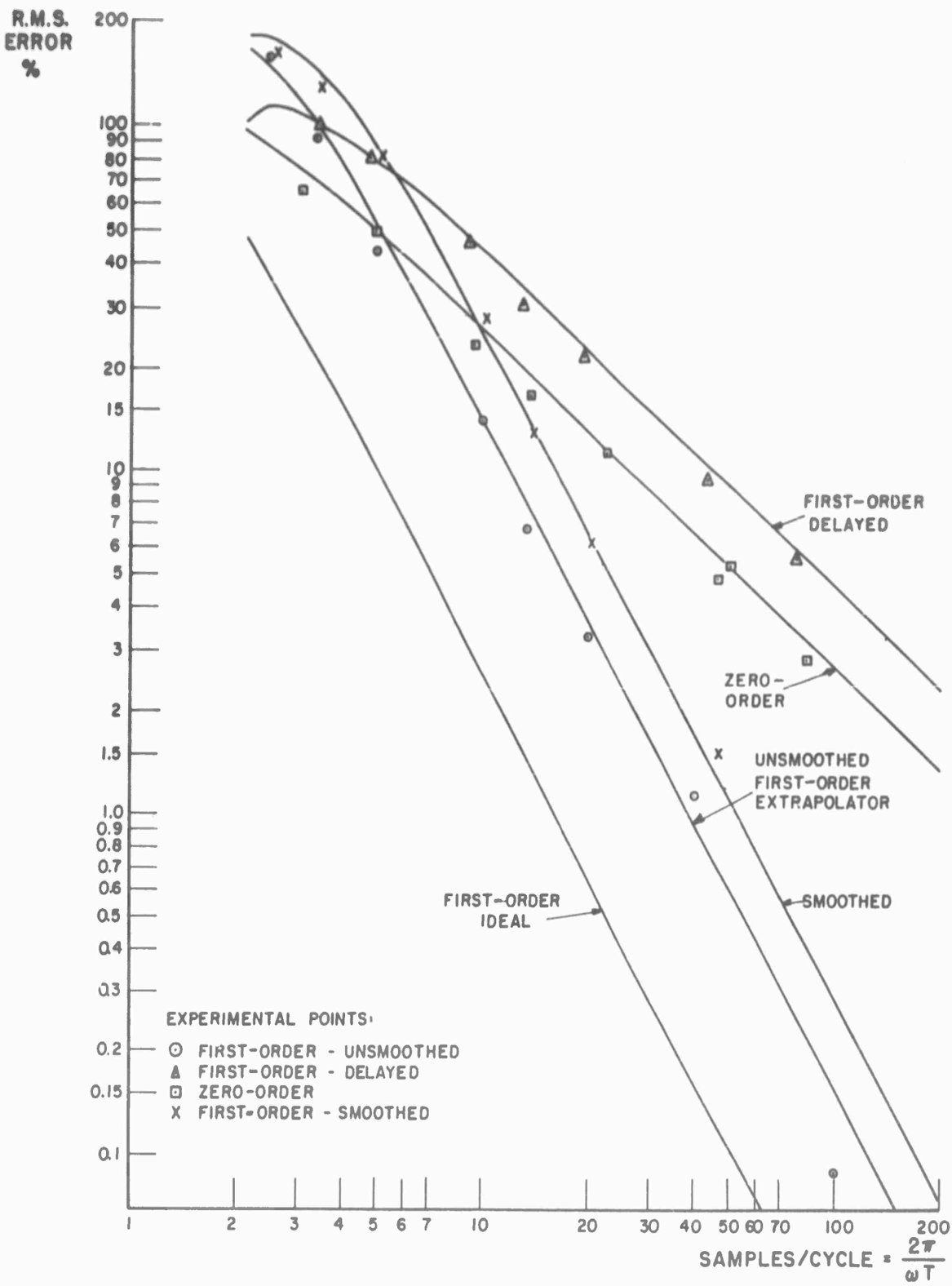

ROOT MEAN SQUARE RECOVERY ERRORS

ZERO- AND FIRST-ORDER FILTERS

FIG. 20
MK-12

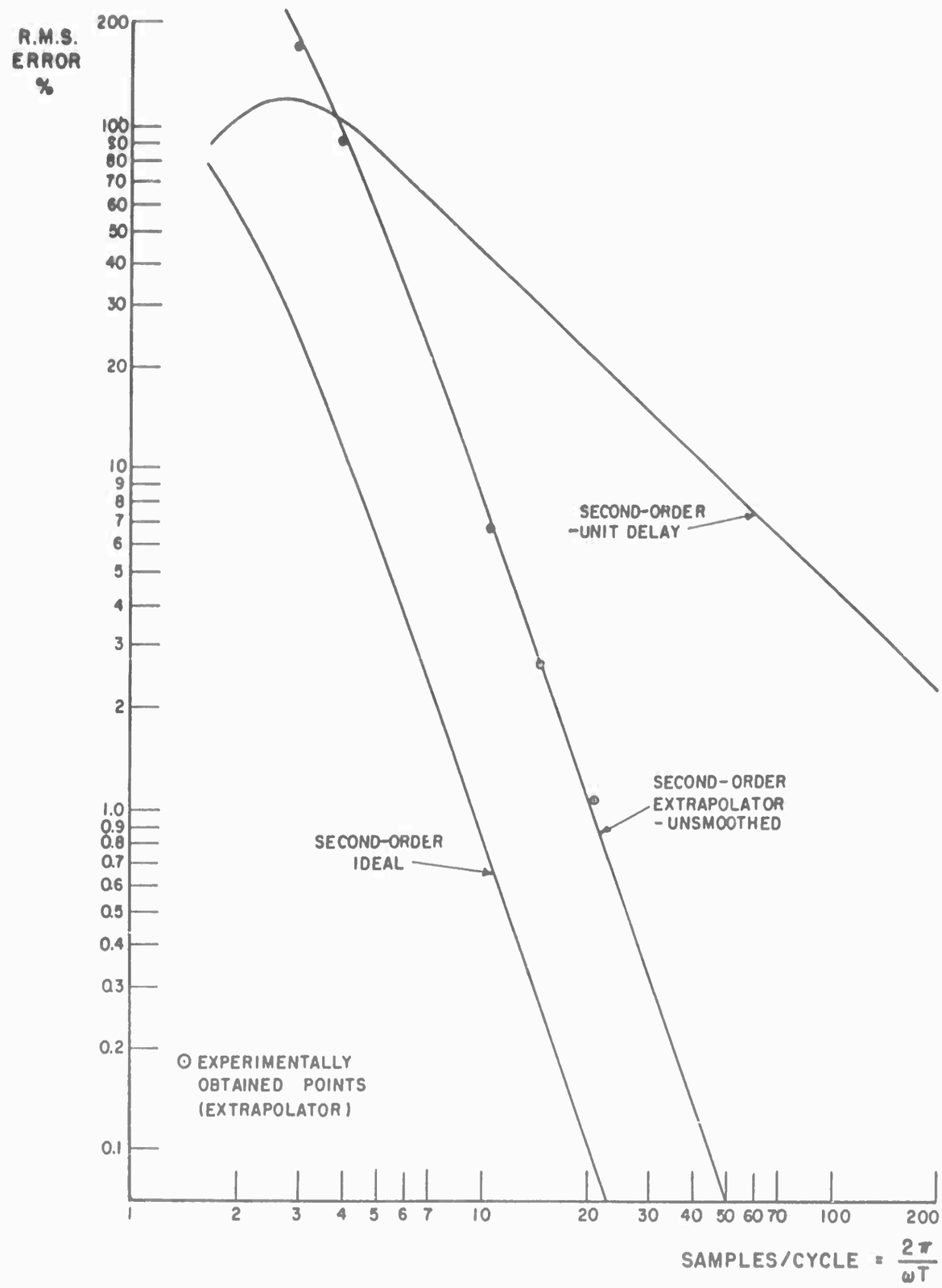

ROOT MEAN SQUARE RECOVERY ERROR

SECOND-ORDER FILTERS

FIG. 21
MK-12

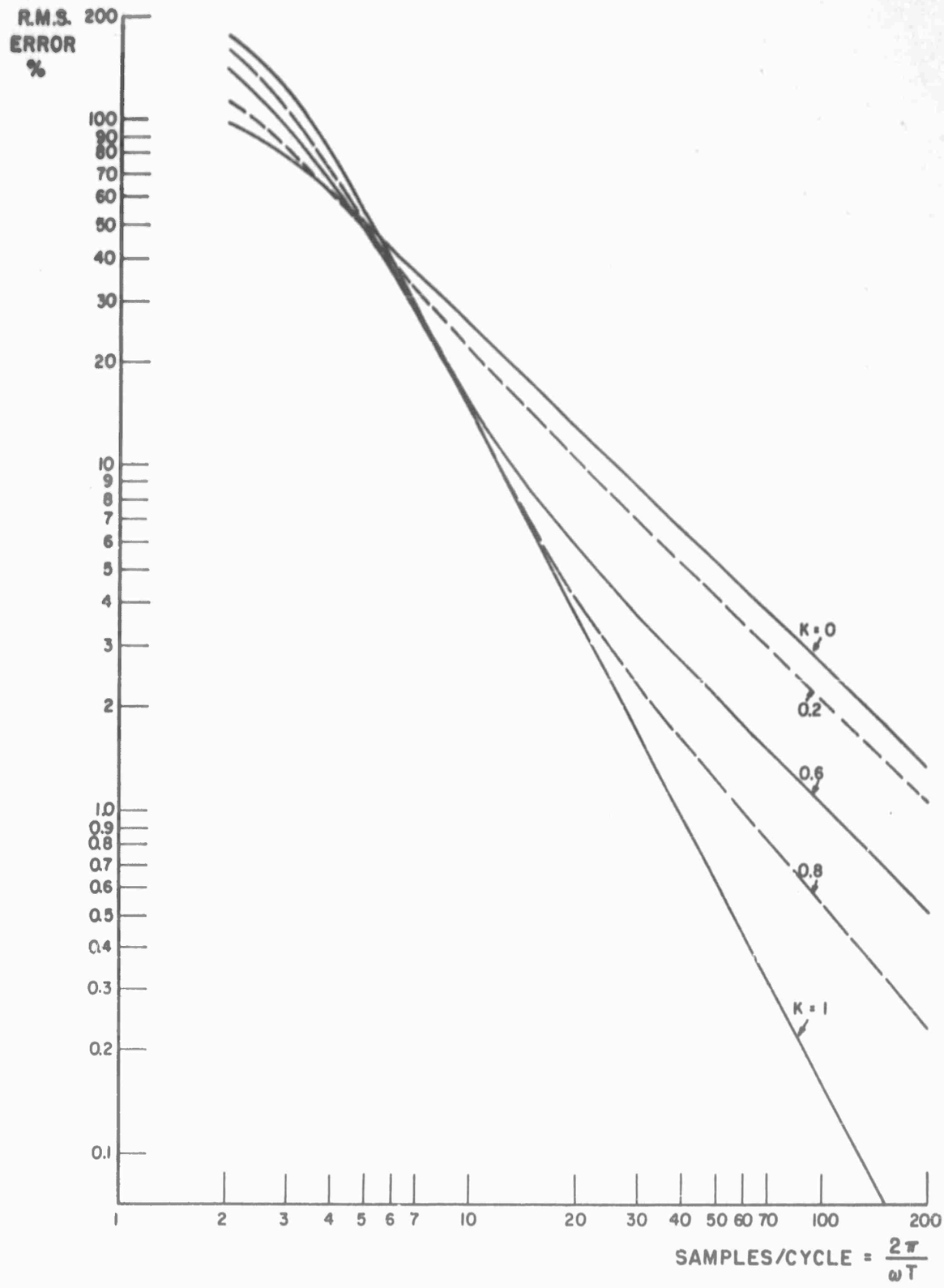

ROOT MEAN SQUARE ERROR

FRACTIONAL-ORDER HOLD

FIG. 22
MK-12

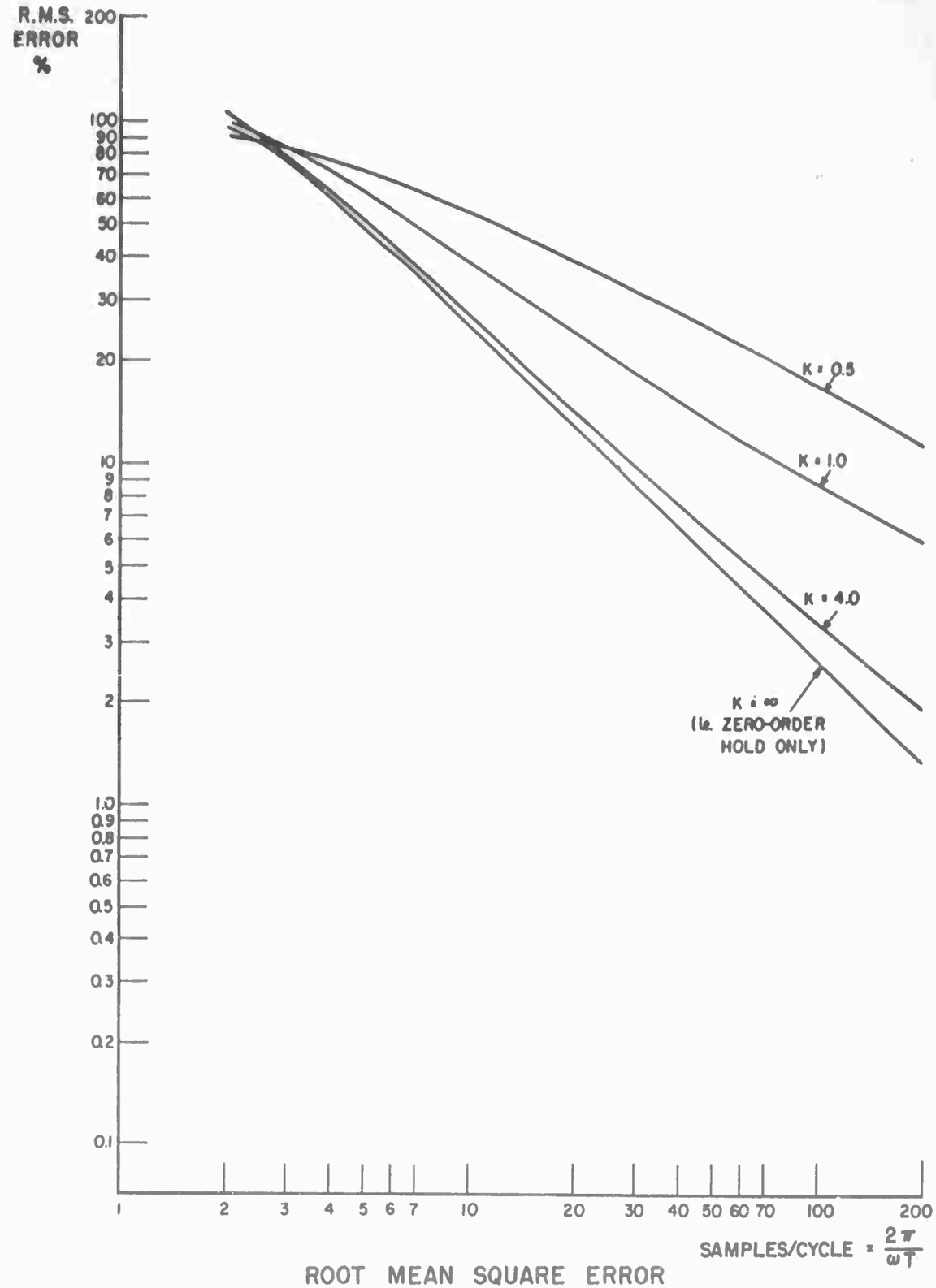

ROOT MEAN SQUARE ERROR

FIRST-ORDER EXPONENTIAL FILTER

$$K = \frac{b}{\omega_s/2}$$

FIG. 23a
MK-12

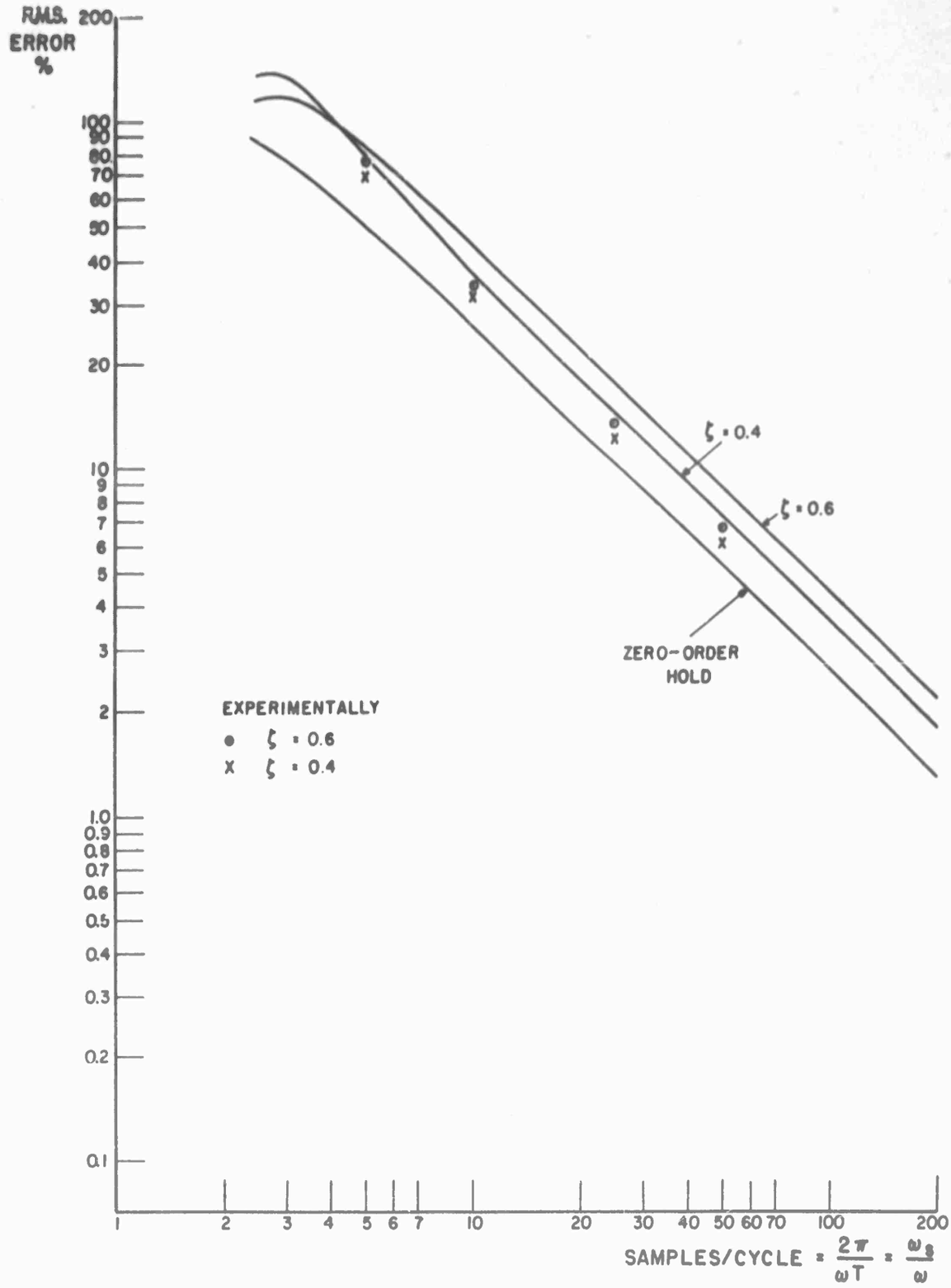

(a) ROOT MEAN SQUARE ERROR

SECOND-ORDER EXPONENTIAL FILTER

$$\frac{\omega_n}{\omega_s/2} = 0.8$$

$$\text{FILTER} = \frac{\omega_n^2}{s^2 + 2\zeta\omega_n s + \omega_n^2}$$

FIG. 23b
MK-12

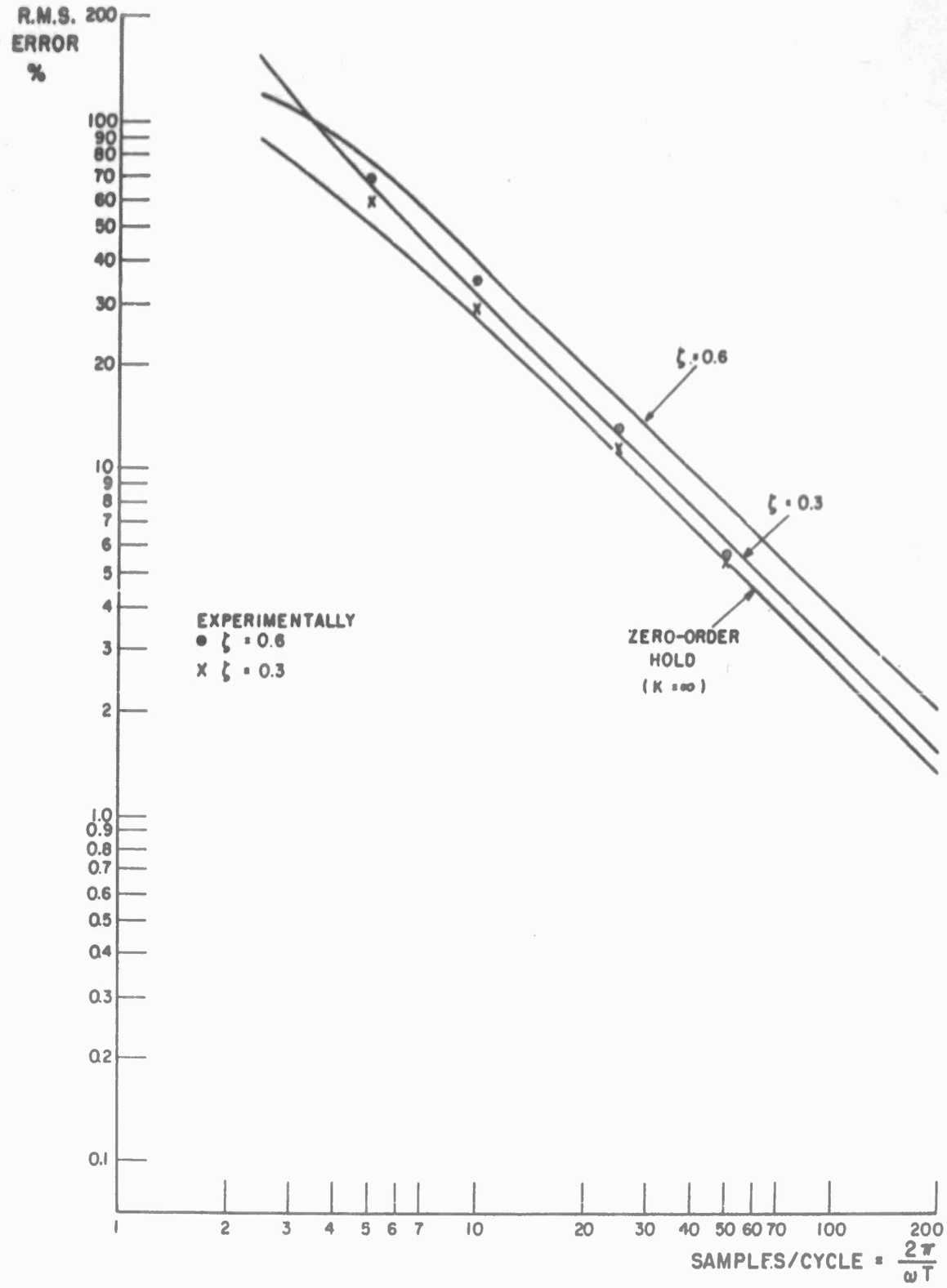

(b) ROOT MEAN SQUARE ERROR

$$\frac{\omega_n}{\omega_s/2} = 1.0$$

FIG. 23c
MK-12

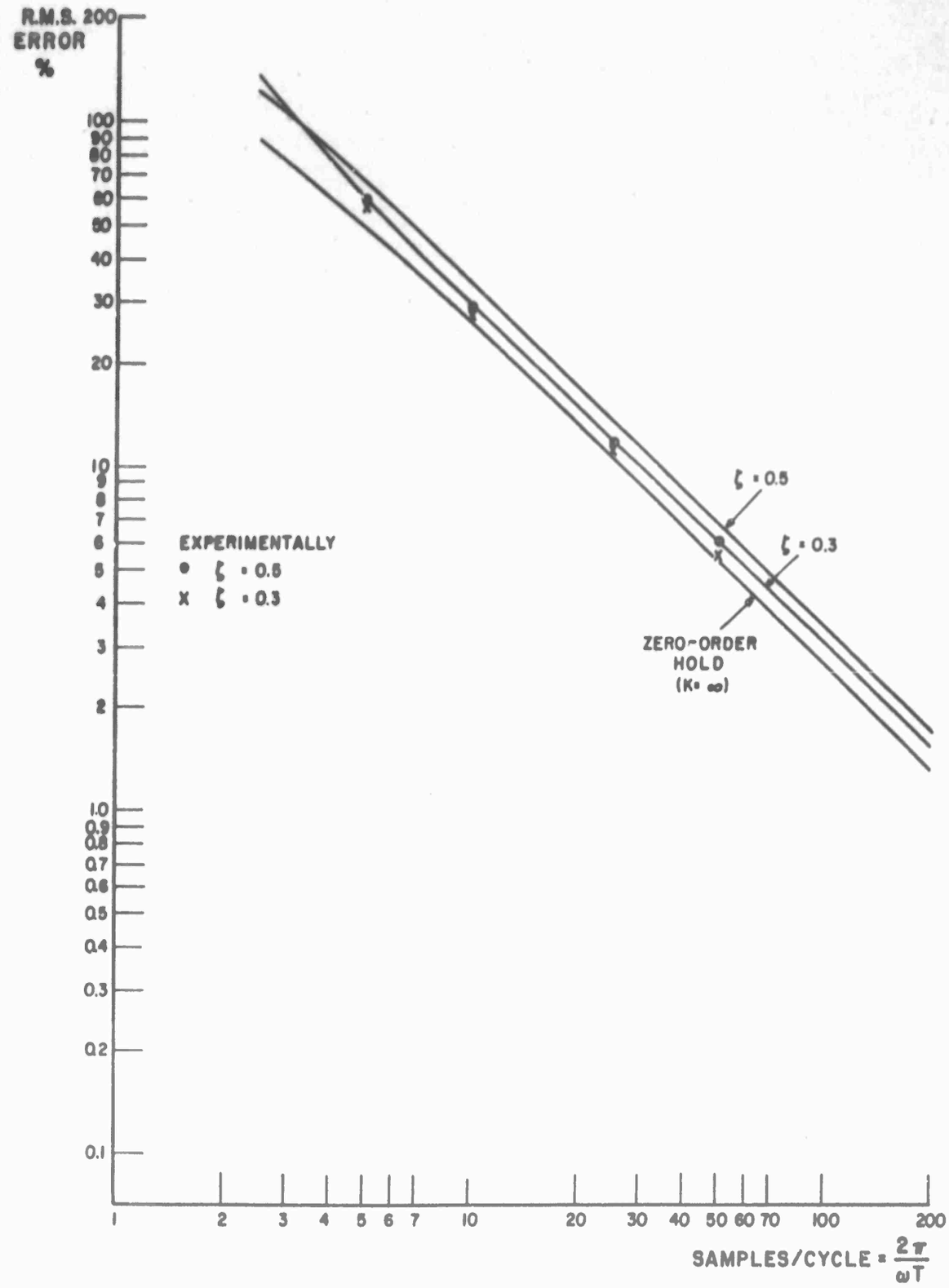

(c) ROOT MEAN SQUARE ERROR

$$\frac{\omega_n}{\omega_s/2} = 1.2$$

APPENDIX A

EXPONENTIAL FILTERING OF D/A CONVERTED DATA

In the case where the staircase output of the D/A converter is fed to an exponential filter which has a non-finite transient response, the simple method used to obtain the filter output for the polynomial filters cannot be used. The system of interest is obtained from Figure 18, and shown in Figure A-1. The system is seen to be a sampled-data system, and z-transform techniques can be used (see Ref. 1, 2, 3 or 4).

The modified z-transform of the output g(t) will be

$$G(z,m) = \left(\frac{z-1}{z}\right) \cdot F(z) Z_m \left\{\frac{H(s)}{s}\right\} \tag{A.1}$$

which yields a recovery error whose modified z-transform is

$$E(z,m) = \left(\frac{z-1}{z}\right) F(z) \cdot Z_m \left\{\frac{H(s)}{s}\right\} - F(z,m) \tag{A.2}$$

Now the mean square recovery error is, from Section 8, given by

$$\overline{\varepsilon^2(t)} = \lim_{N\to\infty} \frac{1}{N+1} \sum_{n=0}^{N} \int_0^1 \varepsilon^2_{n+p} dp \tag{A.3}$$

It is thus required to take the inverse modified z-transform of (A.2) and substitute into (A.3). The inverse modified z-transform is given by

$$\varepsilon(n,m) = \varepsilon_{n-1+m} = \frac{1}{2\pi j} \oint E(z,m) z^{n-1} dz$$

Thus,

$$\varepsilon_{n+m} = \frac{1}{2\pi j} \oint \left[\frac{z-1}{z} F(z) \cdot Z_m \left\{ \frac{H(s)}{s} \right\} - F(z,m) \right] z^n dz \qquad (A.4)$$

and

$$p = m$$

<u>Case 1: First-Order Filtering</u>

Let

$$H(s) = \frac{b}{s+b}$$

Then

$$Z_m \left\{ \frac{H(s)}{s} \right\} = Z_m \left\{ \frac{b}{s(s+b)} \right\} = \left[\frac{1}{z-1} - \frac{e^{-bmT}}{z-e^{-bT}} \right]$$

or

$$Z_m \left\{ \frac{H(s)}{s} \right\} = \frac{(z-B) - B^m(z-1)}{(z-1)(z-B)}$$

where $B = e^{-bT}$

Also, for $f(t) = e^{j\omega t}$, $F(z) = \frac{z}{z-A}$ and $F(z,m) = \frac{A^m}{z-A}$

where $A = e^{-j\omega T}$

Substituting into equation (A.2), the modified z-transform of the error becomes

$$E(z,m) = \frac{(z-B) - B^m(z-1)}{(z-A)(z-B)} - \frac{A^m}{z-A}$$

$$= \frac{Wz - X}{(z-A)(z-B)}$$

where $W = 1 - B^m - A^m$

$X = B + B^m - A^m B$

and where $m = p$

$$\varepsilon_{n+p} = \frac{1}{2\pi j} \oint \frac{Wz - X}{(z-A)(z-B)} \cdot z^n dz$$

$$= \frac{WA - X}{A - B} \cdot A^n + \frac{WB - X}{B - A} B^n$$

Now $B^n \to 0$ as n increases, and so has a mean square value of zero. Thus the only contribution to the mean square will be

$$(\varepsilon_{n+p})_1 = \frac{WA - X}{A - B} \cdot A^n$$

Again the mean square error for a cosine input is given by

$$\overline{\varepsilon^2(t)} = \int_0^1 \frac{\varepsilon_{n+p}\, \varepsilon^*_{n+p}}{2} dp = \int_0^1 I(p)dp$$

where $$I(p) = \frac{1}{2}\left(\frac{WA - X}{A - B}\right)\left(\frac{W^*A^* - X^*}{A^* - B}\right)$$

Now

$$(1 - 2B\cos a + B^2)\, I(p) = 1 - B^p + B^{2p} + B^2 + BB^p - \cos a[2B - BB^p - B^p + B^{2p}]$$

$$- \cos ap[1 - B^p + B^2 - BB^p]$$

$$+ \cos a(p+1)\,[B - B^p]$$

$$+ \cos a(p-1)\,[B - B^{1+p}]$$

Integrating over the p, and after some effort, the mean square error becomes:

$$\overline{e^2(t)} = 1 - \frac{\sin a}{a} + \frac{\sin a - \beta\cos a + \beta}{a^2 + \beta^2} - \frac{(1 - B^2)(1 - \cos a)}{2\beta(1 - 2B\cos a + B^2)}$$

where $a = \omega T$

$\beta = bT$

$B = e^{-bT}$

Case 2: Second-Order Filtering

Let

$$H(s) = \frac{\omega_n^2}{s^2 + 2\zeta\omega_n s + \omega_n^2}$$

$$Z_m\left\{\frac{H(s)}{s}\right\} = Z_m\left\{\frac{\omega_n^2}{s(s^2 + 2\zeta\omega_n s + \omega_n^2)}\right\}$$

$$= Z_m\left\{\frac{d^2 + b^2}{s[(s+d)^2 + b^2]}\right\}$$

where $d = \zeta\omega_n$

$b = \omega_n\sqrt{1 - \zeta^2}$

Then

$$Z_m\left\{\frac{H(s)}{s}\right\} = \left\{\frac{1}{z-1} - A^m \sec\phi\left[\frac{z\cos(bmT+\phi) - A\cos\langle(1-m)bT-\phi\rangle}{z^2 - 2z\,A\cos bT + A^2}\right]\right\}$$

where $A = e^{-dT} = e^{-\zeta\omega_n T}$

and $\tan \phi = -\frac{d}{b} = -\frac{\zeta}{\sqrt{1-\zeta^2}}$

Now $F(z) = \frac{z}{z-C}$ where $C = e^{-j\omega T}$

The filter output is thus

$$C(z,m) = \left(\frac{z-1}{z}\right)\left(\frac{z}{z-C}\right)\left\{\frac{1}{z-1} - A^m \sec \phi \left[\frac{z \cos(bmT+\phi) - A \cos\langle(1-m)bT-\phi\rangle}{z^2 - 2zA \cos bT + A^2}\right]\right\}$$

Again it is the contribution from the pole at $z = C$ which yields the steady-state component of the output and which has the non-vanishing mean square value. This component is given by

$$c_{n+p} = \left[1 - (C-1)Y\left\{\frac{WC - X}{C^2 - ZC + A^2}\right\}\right] C^n$$

where $W = \cos(bpT + \phi)$

$X = A \cos\langle(1-p)bT-\phi\rangle$

$Y = A^p \sec \phi$

$Z = 2A \cos bT$

The recovery error becomes

$$\varepsilon_{n+p} = c_{n+p} - f_{n+p}$$

$$\varepsilon_{n+p} = \left[1 - (C-1)Y\left\{\frac{WC - X}{C^2 - ZC + A^2}\right\} - C^p\right] C^n$$

$$= \left[\frac{-C^{2+p} + RC^2 + ZC^{1+p} + SC - A^2C^p + U}{C^2 - ZC + A^2}\right] C^n$$

Where $R = (1 - YW)$

$S = (YX + YW - Z)$

$U = (A^2 - YX)$

The mean square error for a cosine input is thus

$$\overline{\varepsilon^2(t)} = \int_0^1 I(p)dp$$

where

$$2I(p) = \varepsilon_{n+p}\,\varepsilon^*_{n+p} = 1 + \frac{N(p)}{D}$$

and $N(p) = R^2 + S^2 + U^2 - 2\cos(\omega T\cdot p)(R - SZ + UA^2)$

$+ 2\cos(\omega T)(RS + SU) - 2\cos[\omega T(1+p)](S - UZ)$

$+ 2RU\cos(2\omega T) - 2U\cos[(2+p)\omega T]$

$+ 2\cos[(1-p)\omega T](RZ - A^2S) - 2A^2R\cos[(2-p)\omega T]$

$D = (1+Z^2+A^4) - 2\cos(\omega T)\cdot(Z^2+ZA^2) + 2A^2\cos(2\omega T)$

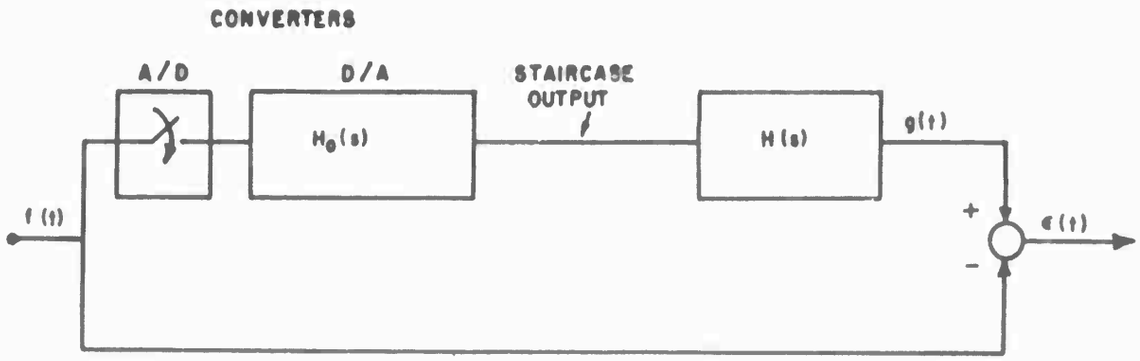

FIG. A1 EXPONENTIAL FILTERING

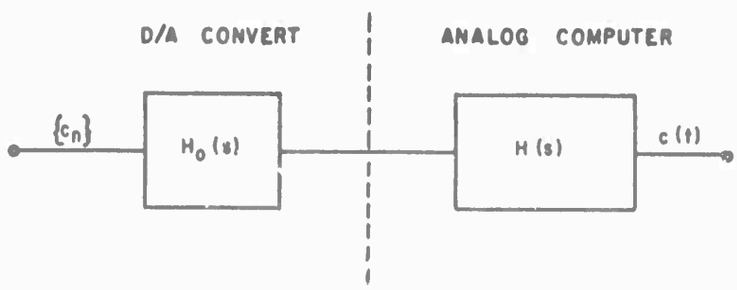

FIG. A2 EXPONENTIAL RECONSTRUCTION FILTERS

APPENDIX B

HARDWARE REQUIREMENTS FOR FILTERS

Another comparison of the recovery filters is obviously the hardware necessary to realize these filters. Table B-1 provides one such comparison based on realizing the filters with standard analog computer components. It is assumed that a sample and hold amplifier is available for the polynomial recovery filters, and that the filters receive, as an input, the staircase output of a conventional digital-to-analog converter.

TABLE B-1

Filter	No. of Amplifiers	Circuit Diagram Figure Number
Zero-Order	None or one	6(b)
First-Order Extrapolator - Unsmoothed	5	7(e)
First-Order Extrapolator - Smoothed	7	8(e)
First-Order Delayed and Ideal	3	9(d)
Second-Order Extrapolator	7	11(d)
Second-Order Delayed and Ideal	7	12(c)
N^{th}-Order Extrapolator	N + 4 plus inverters	13
First-Order Exponential	1	
Second-Order Exponential	3	

APPENDIX B

HARDWARE REQUIREMENTS FOR FILTERS

Another comparison of the recovery filters is obviously the hardware necessary to realize these filters. Table B-1 provides one such comparison based on realizing the filters with standard analog computer components. It is assumed that a sample and hold amplifier is available for the polynomial recovery filters, and that the filters receive, as an input, the staircase output of a conventional digital-to-analog converter.

NRC MK-12
National Research Council, Canada. Division of Mechanical Engineering.

SMOOTHING OF DIGITAL-TO-ANALOG CONVERTED DATA IN DIGITAL DATA SYSTEMS.
R.E. Gagné. April 1964. 76 pp. + 23 figs.

A brief review of the properties of sampled signals is given, and used to describe systems which contain digital components. It is shown that the errors in such digital data systems are of two types, one due to the inaccuracies in the algorithm programmed, and the other due to the reconstruction process necessary to convert the digital data to analog form. The latter error only is discussed. A number of realizable smoothing filters, which can be used to improve the reconstruction accuracy over that obtainable directly by conventional digital-to-analog converters, are presented. The frequency responses of these filters are compared with the ideal recovery filter. Also discussed is the percent root mean square reconstruction error when these filters are used to recover a sampled sinusoid. Circuits are presented for the realization of these filters using standard analog computer components.

UNCLASSIFIED

1. Analog digital converters

I. Gagné, R.E.
II. NRC MK-12

NRC MK-12
National Research Council, Canada. Division of Mechanical Engineering.

SMOOTHING OF DIGITAL-TO-ANALOG CONVERTED DATA IN DIGITAL DATA SYSTEMS.
R.E. Gagné. April 1964. 76 pp. + 23 figs.

A brief review of the properties of sampled signals is given, and used to describe systems which contain digital components. It is shown that the errors in such digital data systems are of two types, one due to the inaccuracies in the algorithm programmed, and the other due to the reconstruction process necessary to convert the digital data to analog form. The latter error only is discussed. A number of realizable smoothing filters, which can be used to improve the reconstruction accuracy over that obtainable directly by conventional digital-to-analog converters, are presented. The frequency responses of these filters are compared with the ideal recovery filter. Also discussed is the percent root mean square reconstruction error when these filters are used to recover a sampled sinusoid. Circuits are presented for the realization of these filters using standard analog computer components.

UNCLASSIFIED

1. Analog digital converters

I. Gagné, R.E.
II. NRC MK-12

NRC MK-12
National Research Council, Canada. Division of Mechanical Engineering.

SMOOTHING OF DIGITAL-TO-ANALOG CONVERTED DATA IN DIGITAL DATA SYSTEMS.
R.E. Gagné. April 1964. 76 pp. + 23 figs.

A brief review of the properties of sampled signals is given, and used to describe systems which contain digital components. It is shown that the errors in such digital data systems are of two types, one due to the inaccuracies in the algorithm programmed, and the other due to the reconstruction process necessary to convert the digital data to analog form. The latter error only is discussed. A number of realizable smoothing filters, which can be used to improve the reconstruction accuracy over that obtainable directly by conventional digital-to-analog converters, are presented. The frequency responses of these filters are compared with the ideal recovery filter. Also discussed is the percent root mean square reconstruction error when these filters are used to recover a sampled sinusoid. Circuits are presented for the realization of these filters using standard analog computer components.

UNCLASSIFIED

1. Analog digital converters

I. Gagné, R.E.
II. NRC MK-12

NRC MK-12
National Research Council, Canada. Division of Mechanical Engineering.

SMOOTHING OF DIGITAL-TO-ANALOG CONVERTED DATA IN DIGITAL DATA SYSTEMS.
R.E. Gagné. April 1964. 76 pp. + 23 figs.

A brief review of the properties of sampled signals is given, and used to describe systems which contain digital components. It is shown that the errors in such digital data systems are of two types, one due to the inaccuracies in the algorithm programmed, and the other due to the reconstruction process necessary to convert the digital data to analog form. The latter error only is discussed. A number of realizable smoothing filters, which can be used to improve the reconstruction accuracy over that obtainable directly by conventional digital-to-analog converters, are presented. The frequency responses of these filters are compared with the ideal recovery filter. Also discussed is the percent root mean square reconstruction error when these filters are used to recover a sampled sinusoid. Circuits are presented for the realization of these filters using standard analog computer components.

UNCLASSIFIED

1. Analog digital converters

I. Gagné, R.E.
II. NRC MK-12

NRC MK-12
National Research Council, Canada. Division of Mechanical Engineering.

SMOOTHING OF DIGITAL-TO-ANALOG CONVERTED DATA IN DIGITAL DATA SYSTEMS.
R.E. Gagné. April 1964. 76 pp. + 23 figs.

A brief review of the properties of sampled signals is given, and used to describe systems which contain digital components. It is shown that the errors in such digital data systems are of two types, one due to the inaccuracies in the algorithm programmed, and the other due to the reconstruction process necessary to convert the digital data to analog form. The latter error only is discussed. A number of realizable smoothing filters, which can be used to improve the reconstruction accuracy over that obtainable directly by conventional digital-to-analog converters, are presented. The frequency responses of these filters are compared with the ideal recovery filter. Also discussed is the percent root mean square reconstruction error when these filters are used to recover a sampled sinusoid. Circuits are presented for the realization of these filters using standard analog computer components.

UNCLASSIFIED

1. Analog digital converters

I. Gagné, R.E.
II. NRC MK-12

NRC MK-12
National Research Council, Canada. Division of Mechanical Engineering.

SMOOTHING OF DIGITAL-TO-ANALOG CONVERTED DATA IN DIGITAL DATA SYSTEMS.
R.E. Gagné. April 1964. 76 pp. + 23 figs.

A brief review of the properties of sampled signals is given, and used to describe systems which contain digital components. It is shown that the errors in such digital data systems are of two types, one due to the inaccuracies in the algorithm programmed, and the other due to the reconstruction process necessary to convert the digital data to analog form. The latter error only is discussed. A number of realizable smoothing filters, which can be used to improve the reconstruction accuracy over that obtainable directly by conventional digital-to-analog converters, are presented. The frequency responses of these filters are compared with the ideal recovery filter. Also discussed is the percent root mean square reconstruction error when these filters are used to recover a sampled sinusoid. Circuits are presented for the realization of these filters using standard analog computer components.

UNCLASSIFIED

1. Analog digital converters

I. Gagné, R.E.
II. NRC MK-12

NRC MK-12
National Research Council, Canada. Division of Mechanical Engineering.

SMOOTHING OF DIGITAL-TO-ANALOG CONVERTED DATA IN DIGITAL DATA SYSTEMS.
R.E. Gagné. April 1964. 76 pp. + 23 figs.

A brief review of the properties of sampled signals is given, and used to describe systems which contain digital components. It is shown that the errors in such digital data systems are of two types, one due to the inaccuracies in the algorithm programmed, and the other due to the reconstruction process necessary to convert the digital data to analog form. The latter error only is discussed. A number of realizable smoothing filters, which can be used to improve the reconstruction accuracy over that obtainable directly by conventional digital-to-analog converters, are presented. The frequency responses of these filters are compared with the ideal recovery filter. Also discussed is the percent root mean square reconstruction error when these filters are used to recover a sampled sinusoid. Circuits are presented for the realization of these filters using standard analog computer components.

UNCLASSIFIED

1. Analog digital converters

I. Gagné, R.E.
II. NRC MK-12

NRC MK-12
National Research Council, Canada. Division of Mechanical Engineering.

SMOOTHING OF DIGITAL-TO-ANALOG CONVERTED DATA IN DIGITAL DATA SYSTEMS.
R.E. Gagné. April 1964. 76 pp. + 23 figs.

A brief review of the properties of sampled signals is given, and used to describe systems which contain digital components. It is shown that the errors in such digital data systems are of two types, one due to the inaccuracies in the algorithm programmed, and the other due to the reconstruction process necessary to convert the digital data to analog form. The latter error only is discussed. A number of realizable smoothing filters, which can be used to improve the reconstruction accuracy over that obtainable directly by conventional digital-to-analog converters, are presented. The frequency responses of these filters are compared with the ideal recovery filter. Also discussed is the percent root mean square reconstruction error when these filters are used to recover a sampled sinusoid. Circuits are presented for the realization of these filters using standard analog computer components.

UNCLASSIFIED

1. Analog digital converters

I. Gagné, R.E.
II. NRC MK-12