USAELRDL Technical Report 2349

X-BAND SEMICONDUCTOR SWITCHING AND LIMITING USING WAVEGUIDE SERIES TEES

V. J. HIGGINS

March 1963

UNITED STATES ARMY
ELECTRONICS RESEARCH AND DEVELOPMENT LABORATORY
FORT MONMOUTH, N.J.

U. S. ARMY ELECTRONICS RESEARCH AND DEVELOPMENT LABORATORY
FORT MONMOUTH, NEW JERSEY

March 1963

USAELRDL Technical Report 2349 has been prepared under the supervision of the Director, Electronic Components Department, and is published for the information and guidance of all concerned. Suggestions or criticisms relative to the form, contents, purpose, or use of this publication should be referred to the Commanding Officer, U. S. Army Electronics Research and Development Laboratory, Fort Monmouth, New Jersey, Attn: Chief, Microwave and Quantum Electronics Branch, Solid State and Frequency Control Division.

J. M. KIMBROUGH, JR.
Colonel, Signal Corps
Commanding

OFFICIAL:
HOWARD W. KILLAM
Major, SigC
Adjutant

DISTRIBUTION:
Special

X-BAND SEMICONDUCTOR SWITCHING AND LIMITING USING WAVEGUIDE SERIES TEES

V. J. Higgins

DA Task Nr. 3A99-21-001-03

Abstract

This report describes a new microwave semiconductor switching technique X-band. This technique uses various types of varactor diodes operating in a series mode. Series mode switching is obtained by cascading several E-plane tee junctions. Each tee is terminated in a fixed tuned crystal mount. A diode when inserted in its holder is spaced in an integral half guide wavelength from the junction of the series arm and the main waveguide, and each series arm is separated by odd integers of quarter wavelengths. Isolations of 30 to 48 db and insertion losses of 0.3 to 0.8 db have been obtained at a frequency of 9375 Mc/s. Details of a semiconductor X-band power limiter are given. The limiter consists of the same configuration as the switch except that it is not externally biased. Isolations of 20 to 30 db over a bandwidth of 180 to 250 Mc/s and insertion loss of 1.2 db and less over a 500 Mc/s bandwidth were noted.

U. S. ARMY ELECTRONICS RESEARCH AND DEVELOPMENT LABORATORY

FORT MONMOUTH, NEW JERSEY

CONTENTS

CONTENTS (Cont)

X-BAND SEMICONDUCTOR SWITCHING AND LIMITING USING WAVEGUIDE SERIES TEES

INTRODUCTION

The fact that the impedance level of a semiconductor diode can be varied by the application of a bias voltage has led to the use of semiconductor diodes in rf switching and limiting applications. The use of semiconductor diodes to control the level of microwave power transmission has been detailed in the literature.[1-6,9-13,15-18]

Insertion of a diode in a waveguide or other transmission line results in attenuation and transmission of rf power incident upon the diode. Attenuation of the power incident upon the diode is achieved by reflection or absorption, or both. When rf power is transmitted past the diode with little loss, the ratio of power incident upon the diode to power transmitted past the diode is termed insertion loss. Similarly, when rf power is attenuated by the diode with little transmission, the same ratio is termed isolation.

The level of rf power transmission is controlled through the application of forward and reverse bias potentials to the diode terminals. For a particular diode, the bias requirements will depend upon the semiconductor material (i.e., silicon, germanium, or gallium arsenide), the frequency of operation, and the transmission line environment. For example, a semiconductor diode shunted simply across the center of a waveguide at 9000 Mc/s is usually biased in the forward direction to obtain a high impedance, allowing transmission past the diode with little loss, and biased in the reverse direction to obtain a low impedance, preventing transmission past the diode.[3,4,6,13] At 1000 Mc/s this is not necessarily the case. With the same diode now shunted across a transmission line of lower characteristic impedance (coaxial or stripline), a forward bias results in a low impedance and a reverse bias results in a high impedance. The bias requirements for transmission and attenuation of incident rf power are now the opposite of the X-band case. This is primarily due to changes in the frequency dependent parasitic reactance attributed to diode lead inductance and package capacitance and to capacitive reactance changes in the transition region or barrier layer capacitance.

At frequencies in the X-band region (8.2 - 12.4 kMc/s), particularly 9300 Mc/s, the simplest form of the semiconductor switch consists of a diode shunted across a waveguide along the guide axis.[3,4,10,13] The operation of the diode in this simple form of switch can be explained qualitatively by referring to the assumed diode equivalent circuits of Fig. 1.

In the equivalent circuit the nonlinear capacitance of the diode, in this case a varactor, is attributed to transition region or barrier layer capacitance. This capacitance is predominant over any diffusion capacitance arising from minority carrier storage.[2,9,19] The barrier layer capacitance as a function of voltage is defined approximately as[2]

$$C_B(V) \approx \frac{C_o}{\left(1 - \frac{V}{\phi}\right)^{\frac{1}{n}}} \tag{1}$$

where C_o is the zero bias barrier capacitance, ϕ is the contact or "built-in" voltage of the barrier and is a function of semiconductor doping with impurity atoms. For abrupt junctions, e.g., alloy junctions, point contact diodes, n is two; for graded junctions, e.g., diffused mesa types as in most varactors, n is three.

The application of a forward bias voltage greater than the contact or barrier potential ϕ will effectively short the barrier. For this bias condition, the diode equivalent circuit is an R-L circuit shunted by the package capacitance. In the absence of conductivity modulation, R is simply the spreading resistance R_s, and L_s is the lead inductance. The diode impedance is then:

$$Z_D = \frac{\frac{L_s}{C_p} - j\frac{R_s}{\omega C_p}}{R_s + j\left(\omega L_s - \frac{1}{\omega C_p}\right)} \quad . \tag{2}$$

If the parameters L_s and C_p are such that antiresonance occurs, that is $\omega L_s = 1/\omega C_p$, the diode impedance Z_D is simply

$$Z_D = \frac{L_s}{R_s C_p} - j\frac{1}{\omega C_p} \quad . \tag{3}$$

For an antiresonant frequency of 9300 Mc/s, the ratio L_s/C_p is 30 kilohms and the diode impedance is very large for small values of R_s. Thus, transmission of incident microwave power is achieved with little loss, for if the diode impedance is much larger than the characteristic impedance of the standard X-band waveguide, power division between the matched waveguide load and the diode is small.

Consider now the semiconductor diode biased in the reverse direction. This negative bias results in a large barrier resistance which is shunted by the capacitive reactance of the barrier layer. The diode equivalent circuit is now a series R-L-C circuit shunted by the package capacitance. R_s is the spreading resistance, L_s is the lead inductance, and C_B is the barrier layer capacitance. The impedance of the negatively biased diode is

$$Z_D = \frac{\dfrac{R_s + j\left(\omega L_s - \frac{1}{\omega C_B(-V)}\right)}{j\omega C_p}}{R_s + j\left[\omega L_s - \left(\frac{1}{\omega C_p} + \frac{1}{\omega C_B(-V)}\right)\right]} \quad . \tag{4}$$

If the negative bias is such that the lead inductance L_s resonates with the barrier capacitance $C_B(-v)$, that is, $\omega L_s = 1/\omega C_B(-V)$, the expression for diode impedance (Z_D), reduces to:

$$Z_D = R_S(1 - j\omega C_p R_S) \qquad (5)$$
$$R_S^2 \ll X_p^2.$$

For a series resonant frequency of 9300 Mc/s and a lead inductance of 3 nanohenries, the zero bias capacitance of the diode must be of the order of 0.2 to 0.4 picofarads. Then from Equation (1), it is evident that a proper value of negative bias will reduce the zero bias capacitance to a value where series resonance occurs. In this resonant condition the diode impedance Z_d, Equation (5), is very small. Thus, microwave power incident upon the negatively biased diode is mostly reflected with little absorption, and high isolation is achieved.

It must be pointed out that while the simple theory of operation outlined above gives correlation between experimental and predicted results, the correlation is unique to diodes, such as the silver-bonded germanium varactors, whose parameters satisfy the resonant conditions specified (Table I). Other diodes, such as silicon diffused junction varactors (Table I), whose parameters do not satisfy the resonance requirements, have been used in this simple switching mode and have given good experimental results. However, an extension of the same analysis for nonresonant conditions in the package and junction fails to predict with any reasonable degree of accuracy the experimental results obtained. The reason for this discrepancy is as yet unknown, but it is believed due to a difference between the assumed and actual diode equivalent circuits as seen by the incident microwave energy.

The simple model of a diode shunted across a waveguide is an example of shunt mode switching one of the two basic modes of semiconductor switching operation; the other being appropriately the series mode. In the simple mode, as described, a diode is inserted across a transmission line of characteristic impedance Z_0 in parallel with matched load and generator impedances. In the simple series mode, the diode is inserted in the same transmission line in series with matched load and generator impedances (Fig. 2).

The following will describe a three-element limiting and switching configuration, operating in a series mode at a center frequency of 9375 Mc/s.

THE SWITCH SERIES

Design

A photograph of the three-element series switch is shown in Fig. 3. The switch consists basically of three series arms (tees), each arm containing a crystal mount terminated by a shorting plate exactly one-quarter of a guide wavelength behind the crystal seat. Each series arm is separated by quarter guide wavelengths along the main guide. This antiresonant spacing makes the isolation of each of the three diodes almost additive. For this particular configuration, the separation between each series arm, along the main guide, is $5\lambda_g/4$ where λ_g is 4.48 cm or a frequency of 9375 Mc/s. In each series arm, the crystal seat is a distance of $n\lambda_g/2$, where n is any integer, from the junction of the main guide and series arm.

If it were possible to move the shorting plate to the crystal seat, a nominal half wavelength from the waveguide junction, the plate would be translated to the wall of the main guide effectively shorting out the series arm. This would be almost as if no series arm existed and microwave energy would propagate down the main guide with little insertion loss.[20]

Similarly, a perfect open circuit across the guide at the crystal seat would be translated to the wall of the main guide as an infinite impedance. This would have the effect of cutting off all the main guide lying to the right of the waveguide junction, providing almost infinite isolation. (This assumes incident power propagates left to right). If at the crystal seat, an instantaneous change between open and short circuits were obtainable, an ideal switch would be realized.

The use of semiconductor diodes readily lends itself to the microwave circuit described above. It has been shown how the impedance level of a semiconductor diode in a waveguide environment at a frequency in the 9 kMc/s range will change with sudden changes in the applied bias. It has been reported that the time required for a diode to switch between high and low impedance states, as the bias is suddenly changed, is a few nanoseconds.[5,16]

Operation

The operation of the three-element series switch is the reverse of the simple shunt mode operation. In the series switch, diodes are inserted in each series arm and biased negatively to obtain transmission, and biased positively to prevent transmission.

Silver-bonded germanium varactors of Japanese manufacture, and silicon diffused junction varactors of the MA450-type were tested for switching action. The characteristics of these diodes are listed in Table I. In this particular series configuration, the better switching performance was obtained using the silver-bonded germanium varactor diodes. The parameters of the silver-bonded diodes fully satisfy the resonant conditions described in the simple shunt mode operation, based on the assumed diode equivalent circuit. When forward biased, the diode equivalent circuit becomes an R-L circuit shunted by the package capacitance. Since $\omega L_s = 1/\omega C_p$, the diode is essentially a loaded tank circuit of high impedance which will, to a great degree, prevent transmission of microwave power. When reverse biased, the diode equivalent circuit is an R-L-C series circuit shunted by the package capacitance. The diode is usually biased negatively to the point where $1/\omega C_B(-V) = \omega L_s$. Then the diode equivalent circuit in this resonant condition is simply R_s, the spreading resistance, shunted by C_p, the package capacitance. The net result is a low impedance circuit which allows transmission of microwave power with little loss.

Figures 4 and 5 show isolation and insertion loss as a function of frequency for the diode series switch. The data of Fig. 4 illustrates typical switching performance obtained using GSB2 silver-bonded germanium varactors. Insertion loss lower than that of Fig. 4, of the order of 0.25 db, is obtainable at the expense of a decrease in isolation of a few db, and with a narrowing of 10 to 15 Mc/s of the 20 db and 30 db isolation bandwidths.

Figure 5 shows the series switching performance using selected silicon junction varactors. These units were selected by testing each diode individually for switching ratio, i.e., ratio of isolation to insertion loss. In the shunt case for best switching performance, diodes with low junction capacitance and high cutoff frequency were found to have best switching ratios. Any similar basis for choosing silicon units for acceptable switching action in the three-element configuration was unsuccessful and the empirical approach described above had to be used.

In Fig. 5, the peak isolation occurs at a frequency of 9450 Mc/s, 75 Mc/s greater than the design frequency of the three-element configuration. This shift is attributed to a susceptance introduced by the back plate in each series arm which, at the design frequency, is exactly a quarter of a guide wavelength behind the crystal axis. This susceptance varies rapidly with frequency. It is believed that this susceptance interacts with the diode admittance such that for the silicon units, with their higher package capacitance, peak isolation is attained at 9450 Mc/s rather than at the design frequency of 9375 Mc/s. This may also explain the narrower bandwidths obtained with the silicon varactors.

In the measurement of isolation and insertion loss versus frequency, the incident power level was 500 mw CW using the GSB2 diodes. The GSB2 is rated as capable of dissipating 500 mw. However, VSWR measurements indicated that in this particular mode of operation, 50 to 60 percent of incident power is absorbed so that as a safety factor, the incident power levels were restricted to upper levels of 500 mw CW.

The silicon units with 6-volt breakdown voltages are rated as capable of dissipating 250 mw and were tested at 250 mw CW incident power levels.

Also tested at 250 mw were the GSB1A and GSB1B silver-bonded varactors with 6-volt breakdown voltage ratings. The performance of these diodes is illustrated in Fig. 6.

LIMITER OPERATION

The three-diode series switch has been successfully operated as a passive microwave power limiter for CW input up to 650 mw. The use and operation of the three-element switch correspond with Garver's criteria "... that any diode switch providing high isolation with diode conduction will function passively as a limiter. Low rf power does not cause significant diode conduction, while high rf power results in conduction which changes the diode impedance, increasing the attenuation."[15]

By short-circuiting the diode biasing terminals of the three-element switch, a relatively flat limiting characteristic has been obtained. Using three silver-bonded diodes, the output power is limited to 1.8 mw for an incident power of 500 mw CW, as illustrated in Fig. 7. The output characteristic of Fig. 7, while not perfectly flat, shows an increase of only 0.7 mw in output for an increase in input power from 10 to 500 mw. For the same three diodes, Fig. 8 depicts the frequency dependence of the limiter showing a peak isolation of 24.6 db with a 20 db isolation bandwidth of 207 Mc/s. The low-level insertion loss at 250 microwatts is less than 0.6 db from 9.1 to 9.45 Gc/s rising to 1.2 db at 9.6 Gc/s. Other units have been tested which give a low-level insertion loss of less than 1.05 db over the whole

band for loss of 1 db in isolation, and a slight narrowing of the 20 db bandwidth. This case is illustrated in Fig. 9.

A technique, giving limited output power at levels lower than can be obtained with the three-diode limiter just described, is available. This technique utilizes the rectification properties of the silver-bonded diode which is reported to have a rectification ratio of 10^6.[19]

The diode first seen by the incident microwave energy, diode A in Fig. 10, is inserted in its mount in a direction opposite to the direction of insertion of diodes B and C. The diode terminals are then connected to each other. Measurements indicate that most of the incident microwave energy is absorbed in diode A, giving rise to a substantial rectified current which at 500 mw of input power is as high as 10 ma. Since diodes B and C have been inserted in their respective mounts in a direction of "easy current flow," the current from diode A biases diodes B and C into forward conduction. In this state, each diode represents a high impedance and if driven deep enough into conduction to a point where resonance occurs, the diode impedance can be very large. Thus, at increased input power levels (200-600 mw) the large diode impedance tends to maintain a low output power level, but not a flat output characteristic.

Figure 11 depicts the output characteristic for this type of limiter with the output power limited to 1.1 mw for 650 mw of input power. The frequency dependence of the limiter is illustrated in Fig. 12. A peak isolation of 30 db with a 20 db isolation bandwidth of 245 Mc/s is shown. The low-level insertion loss is less than 1.0 db from 9.1 to 9.45 Gc/s, rising to 1.4 db at 9.6 Gc/s. This form of the three-diode limiter gives higher peak isolation and broader 20 db bandwidths at the expense of an increased insertion loss.

SUMMARY AND CONCLUSIONS

The purpose of this report was to describe a technique for achieving series mode switching and limiting at X-band, using semiconductor diodes in a waveguide structure. Switching was achieved by the application of forward and reverse bias potentials to the diode terminals. When operated as a switch, the three-element configuration provided high isolation and low insertion loss, using either silver-bonded germanium varactors or silicon junction varactors. The better switching performance, i.e., higher isolation and lower insertion loss over wider bandwidths was obtained using the silver-bonded germanium diodes.

The three-element series configuration has also functioned passively as a microwave power limiter. Good limiting action was attained only when silver-bonded germanium units were used. This can be attributed primarily to the low voltage at which these diodes enter conduction (approximately 0.3 volt) and the diode parameters which allow resonant operation. The silicon units enter conduction at approximately 0.8 volt and have higher package capacitance, 0.4 $\mu\mu$f, precluding resonant operation in the 9 to 10 Gc/s region.

If the lead inductance of the silicon units were reduced to 0.7 nanohenries for the same package capacitance of 0.4 $\mu\mu$f, resonant operation in the 9 to 10 Gc/s region could be achieved. However, due to the higher contact potential of silicon, the threshold of limiting would be higher and the output power as a function of input power would resemble the curve of Fig. 3,

in Reference 18.

One of the principal disadvantages of this series mode of operation is power absorption. Most of the incident microwave power is absorbed within the diodes. Thus, for reliable operation, incident power levels must be restricted to levels lower than the dissipation ratings of the particular type diode being used to prevent diode burnout.

The effect of harmonic generation has not been investigated. It is believed that this effect would only become serious in the case of the limiter at the higher power levels. Thus, if the harmonics were removed by a filter, the isolation at the fundamental frequency would be enhanced.

ACKNOWLEDGMENTS

The author is grateful to the following personnel of USAELRDL: Mr. G. E. Hambleton for guidance and many helpful discussions; Messrs. F. A. Brand and W. G. Matthei for their suggestions and interest; and to Mr. T. Saad and Sage Laboratories for construction of the three-element configuration.

REFERENCES

1. D. J. Grace, "Some Applications of Crystal Rectifiers in Broadband Microwave Circuits," Microwave Crystal Rectifier Symposium Record, Fort Monmouth, N. J., p. 313, February, 1956.

2. A. Uhlir, Jr., "The Potential of Semiconductor Diodes in High-Frequency Communications," Proc. IRE, vol. 46, pp. 1099-1115, June, 1958.

3. M. R. Millet, "Microwave Switching by Crystal Diodes," IRE Trans. on Microwave Theory and Techniques," vol. MTT-6, pp. 284-290, July, 1958.

4. R. V. Garver, E. G. Spencer and M. A. Harper, "Microwave Switching Techniques," IRE Trans. on Microwave Theory and Techniques, vol. MTT-6, pp. 378-387, October 1958.

5. R. V. Garver, "High-Speed Switching of Semiconductors-II," IRE Trans. on Microwave Theory and Techniques, vol. MTT-7, pp. 272-276, April, 1959.

6. R. Lucy, "Microwave High-Speed Switch," Proc. 1959 Electronic Components Conference, Philadelphia, Pa., pp. 12-15, May 6-8, 1959.

7. G. C. Messenger, "A Review of Parametric Diode Research," Proc. 1959 Electronic Components Conference, Philadelphia, Pa., pp. 220-222, May 6-8, 1959.

8. C. J. Spector, "A Design Theory for the High-Frequency P-N Junction Variable Capacitor," IRE Trans. on Electron Devices, Vol. ED-6, pp. 347-351, July, 1959.

9. R. V. Garver, J. A. Rosado and E. F. Turner, "Theory of the Germanium Diode Microwave Switch," IRE Trans. on Microwave Theory and Techniques, Vol. MIT-8, pp. 108-111, January, 1960.

10. M. Bloom, "Microwave Switching with Computer Diodes," Electronics, vol. 33, pp. 85-87, January 15, 1960.

11. A. F. Harvey, "Duplexing Systems at Microwave Frequencies," IRE Trans. on Microwave Theory and Techniques, vol. MIT 8, pp. 415-431, July, 1960.

12 J. Galejs, "Multidiode Switches," IRE Trans. on Microwave Theory and Techniques, (Correspondence), vol. MIT-8, pp. 566-569, September 1960.

13. D. W. Feldman and B. R. McAvoy, "A 100 db Microwave Semiconductor Switch," Review of Scientific Instruments, vol. 32, pp. 74-76, January, 1961.

14. S. Kita, J. Okajima and M. Chung, "Parametric Amplifier Using a Silver Bonded Diode," IRE Trans. on Electron Devices, vol. ED-8, pp. 105-109, March, 1961.

15. R. V. Garver and D. Y. Tseng, "X-Band Diode Limiting," IRE Trans. on Microwave Theory and Techniques," (Correspondence), vol. MIT-9, p. 202, March, 1961.

16. R. V. Garver, "Theory of TEM Diode Switching," IRE Trans. on Microwave Theory and Techniques, vol. MIT-9, pp. 224-238, May, 1961.

17. T. H. B. Baker, "Semiconductor Diode Waveguide Switch," Electronic Technology, vol. 38, pp. 300-304, August, 1961.

18. L. Gould, M. Bloom and R. Tenenholtz, "Semiconductor Microwave Control Devices," NEREM Record, 1st Edition, pp. 138-139, November, 1961.

19. S. Kita, "Microwave Applications of the Silver Bonded Diode," Electronics, vol. 35, pp. 86-87, 11 May 1962.

20. G. C. Southworth, Principles and Applications of Waveguide Transmission, pp. 236-240, D. Van Nostrand Company, Inc., 1950.

TABLE I

DIODE PARAMETERS

Parameter	Symbol	Si Junction MA450 Type	Ge Silver-Bonded Varactor Diodes GSB1A	GSB1B	GSB2	Units
Lead Inductance	L_s	2	3	3	3	nh
Package Capacitance	C_p	0.4	0.1	0.1	0.1	pf
Zero Bias Junction Capacitance	C_o	0.6-2.0	0.3	0.3	0.3	pf
Cutoff Frequency	F_c	90-120	60(min)	100(min)	40(min)	kMc/s
Breakdown Voltage	V_B	6	6	6	11	volts

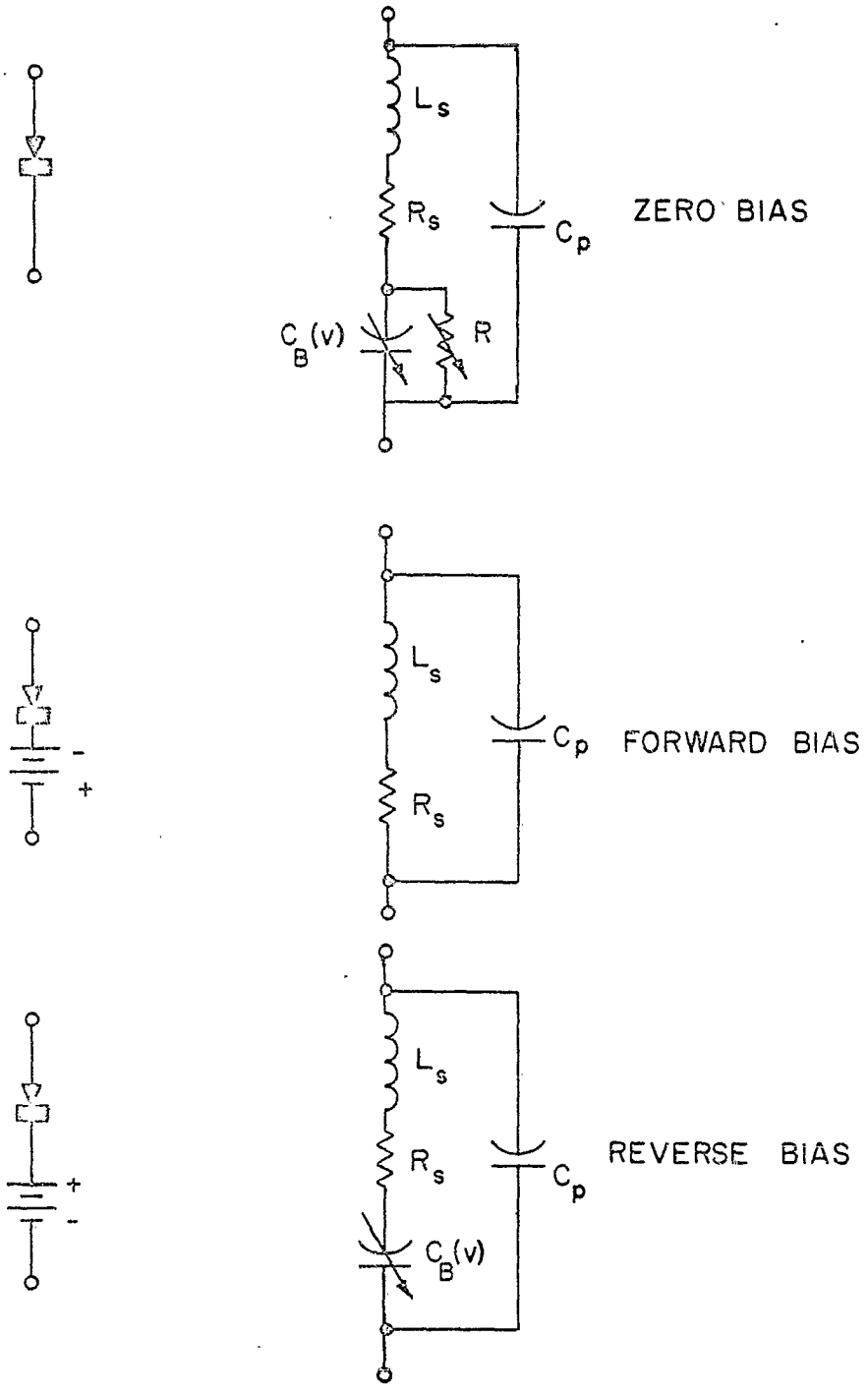

Fig. 1 Assumed Diode Equivalent Circuits

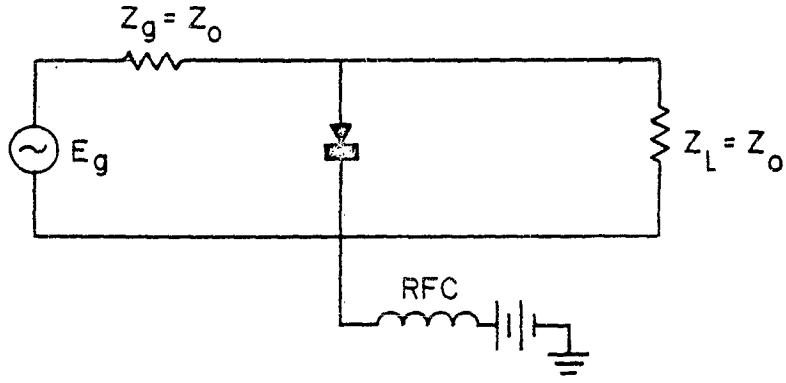

SIMPLE SHUNT MODE

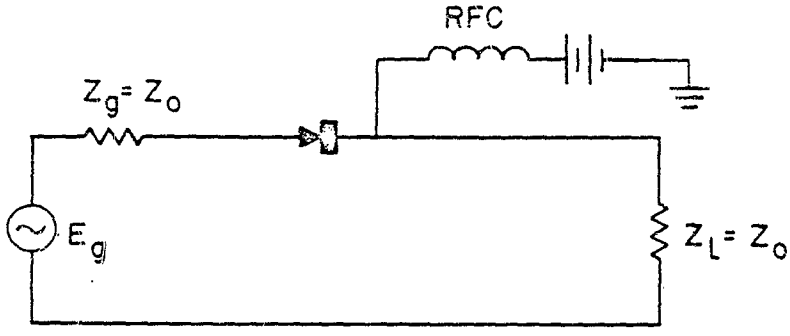

SIMPLE SERIES MODE

Fig. 2 Simple Series and Shunt Mode

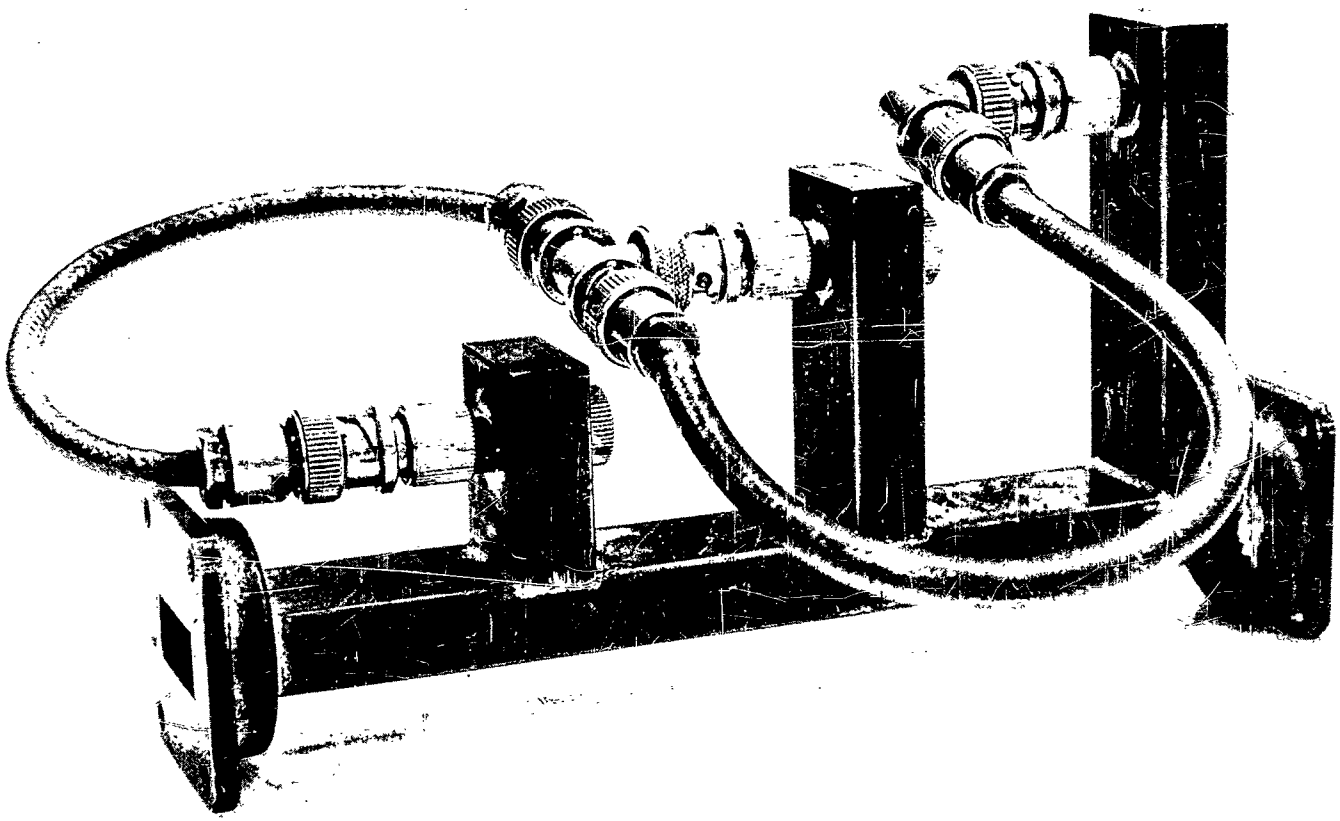

Fig. 3 Photograph - Three-Element Switch

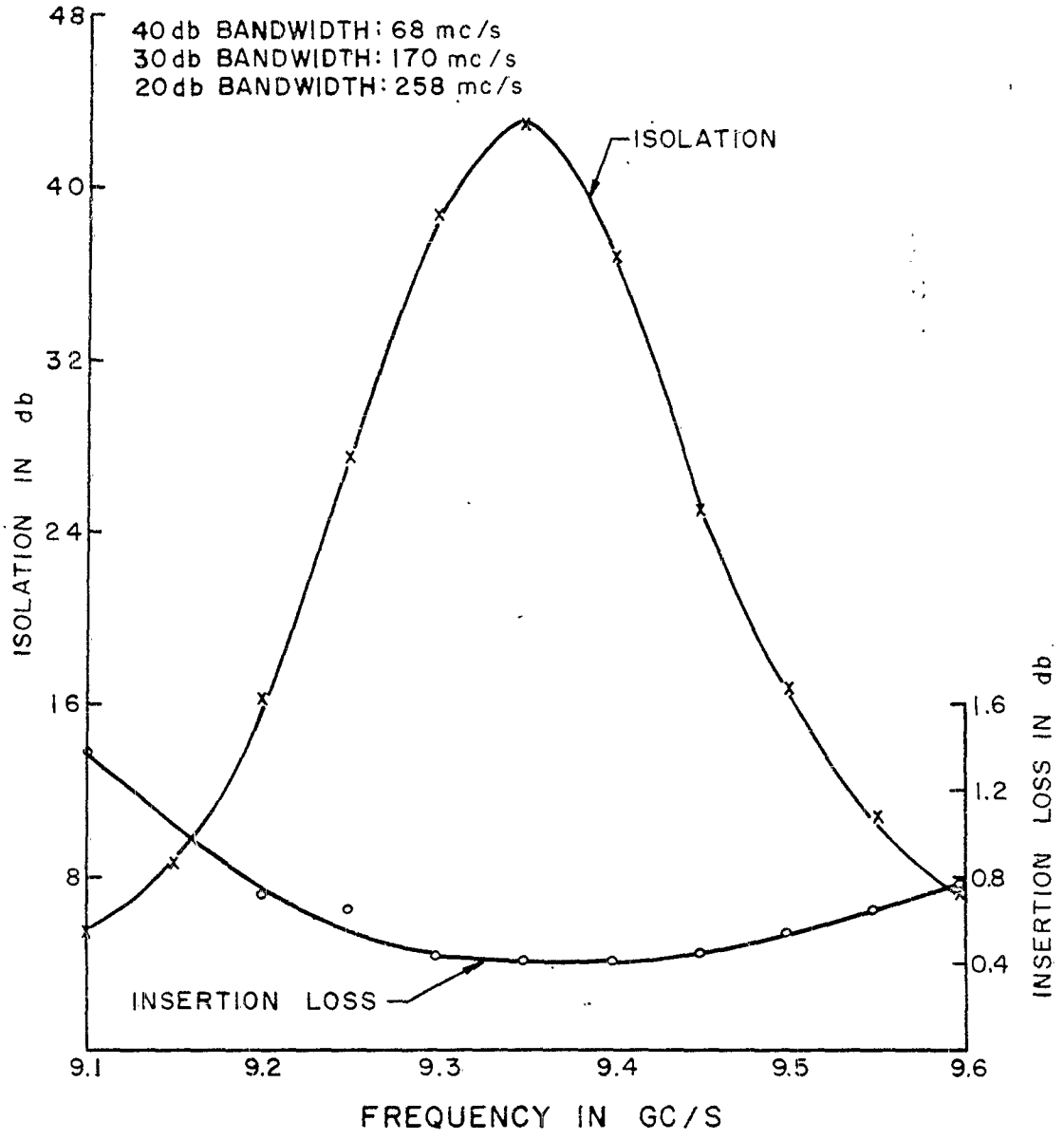

Fig. 4 Typical Switching Performance of GSB2 Type Silver-Bonded Diodes

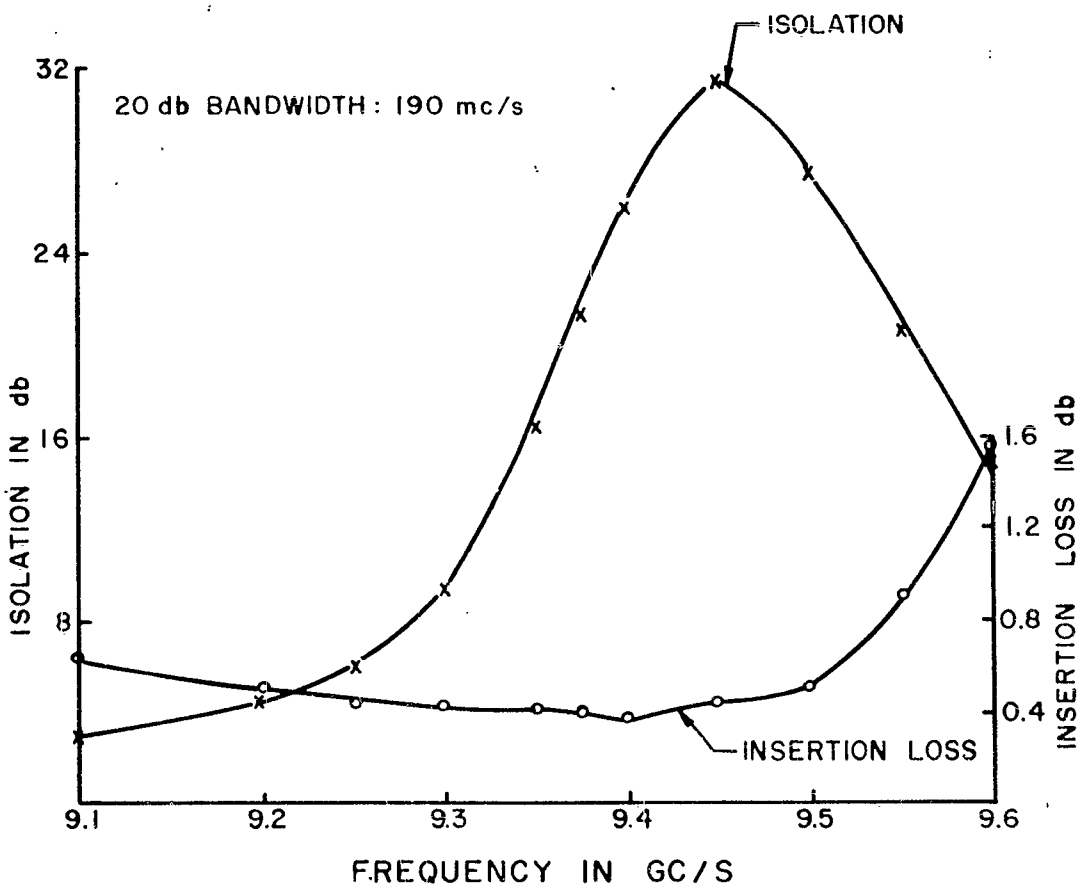

Fig. 5 Typical Switching Performance of Selected Silicon Junction Varactors

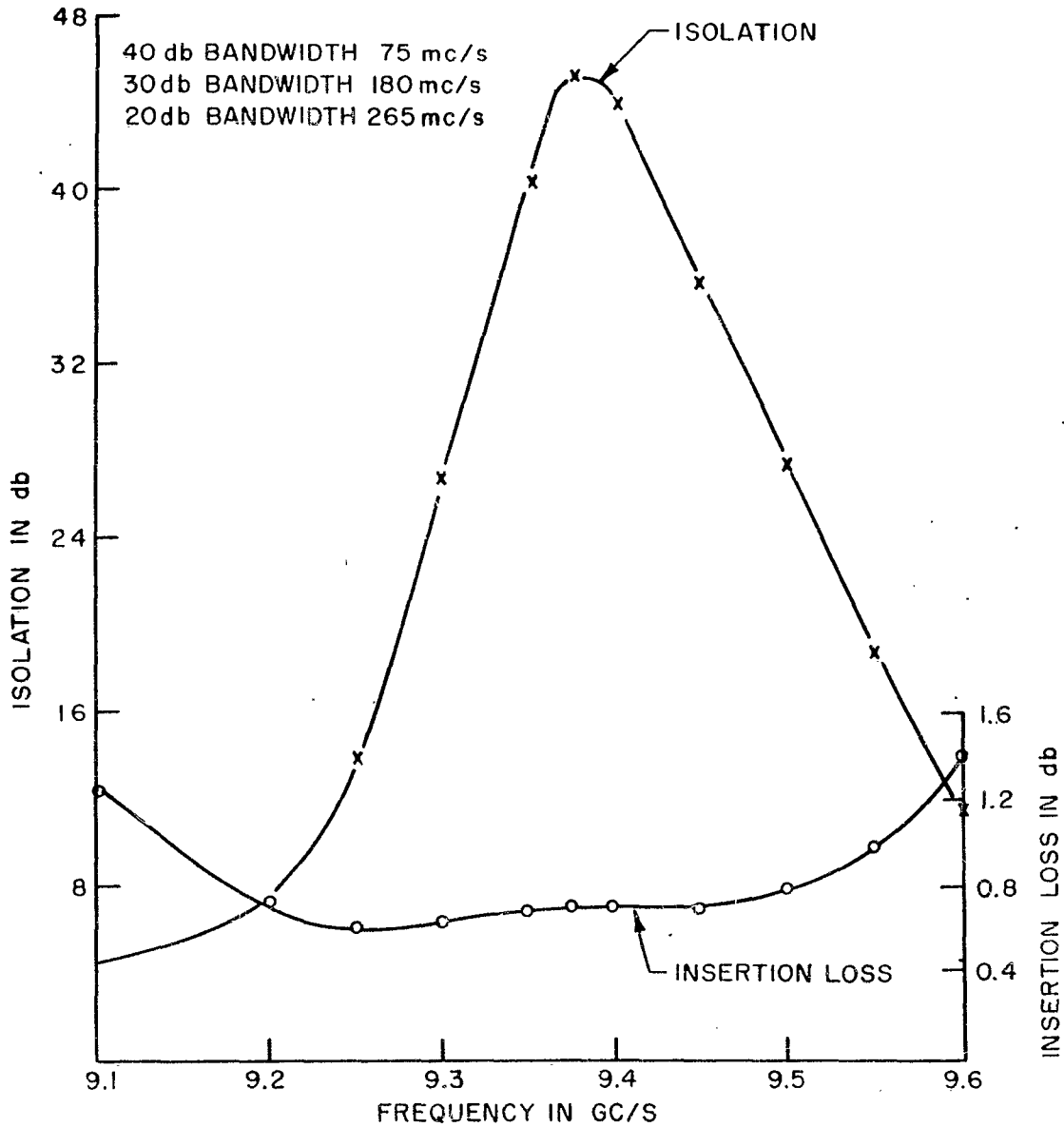

Fig. 6 Typical Switching Performance of GSB1A and GSB1B Silver-Bonded Varactors

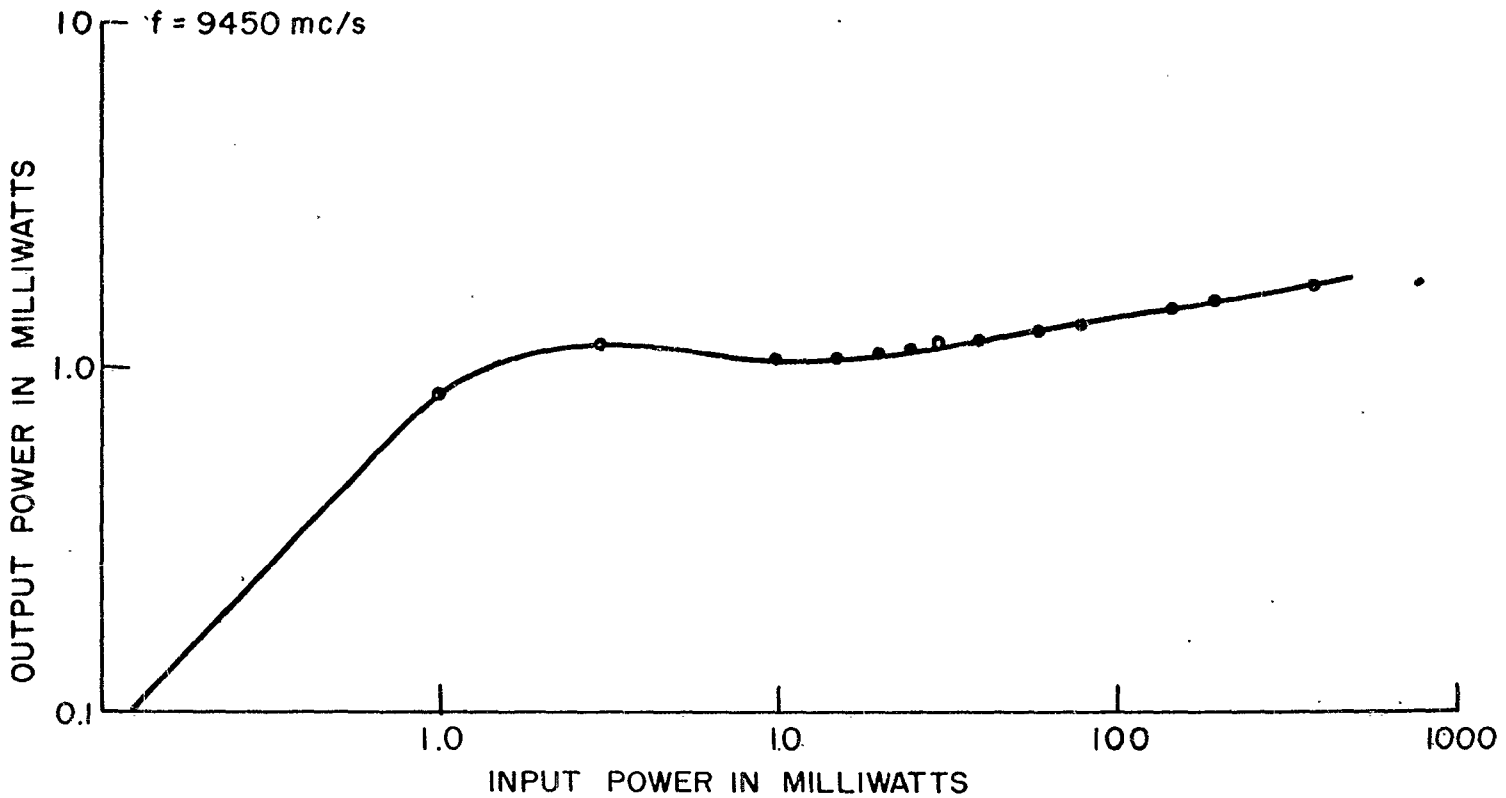

Fig. 7 Output Characteristic of Three-Element Limiter Using Silver-Bonded Diodes with DC Terminals Shorted

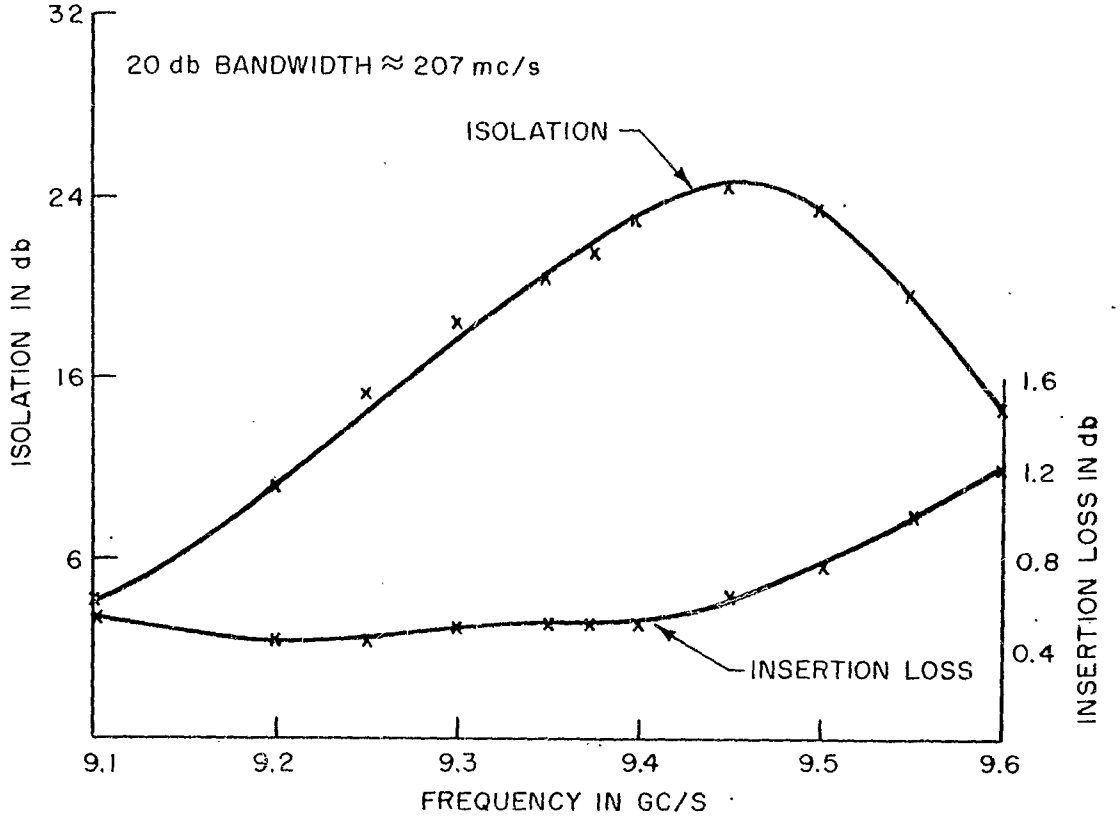

Fig. 8 Frequency Dependence of Three-Element Limiter Using Silver-Bonded Diodes with DC Terminals Shorted

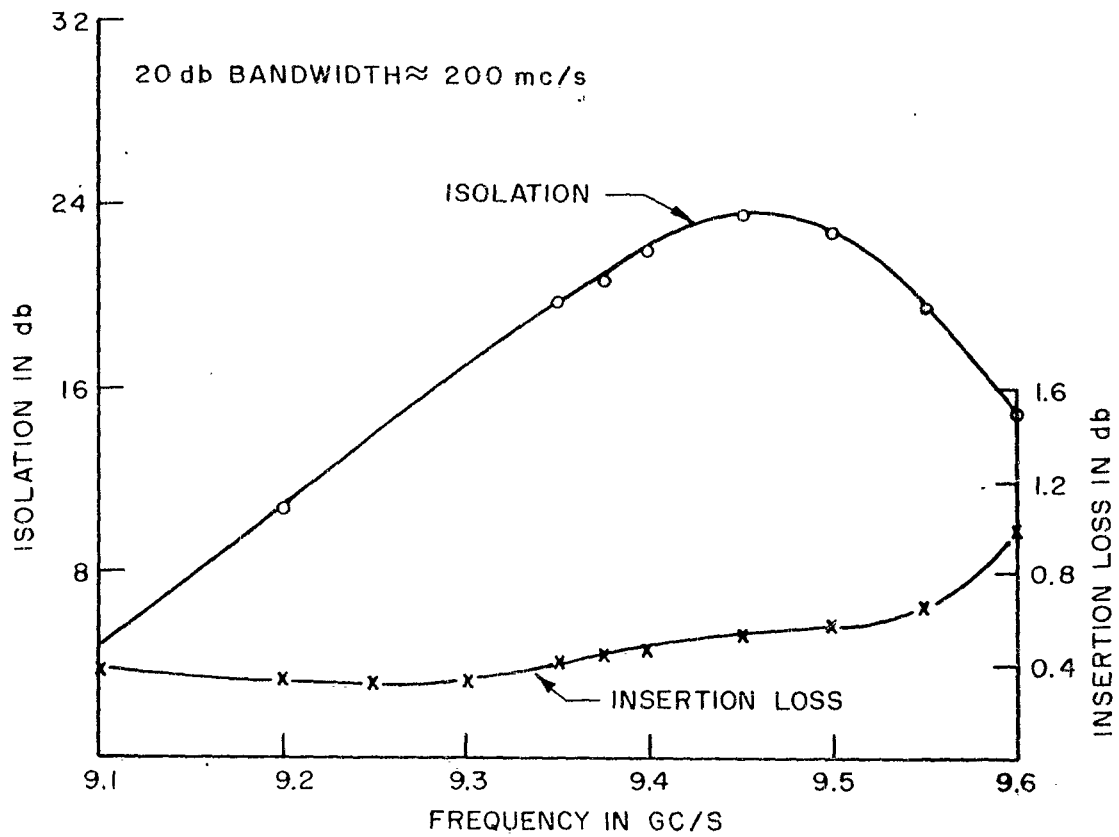

Fig. 9 Three-Element Limiter Using Silver-Bonded Diodes with Improved Insertion Loss

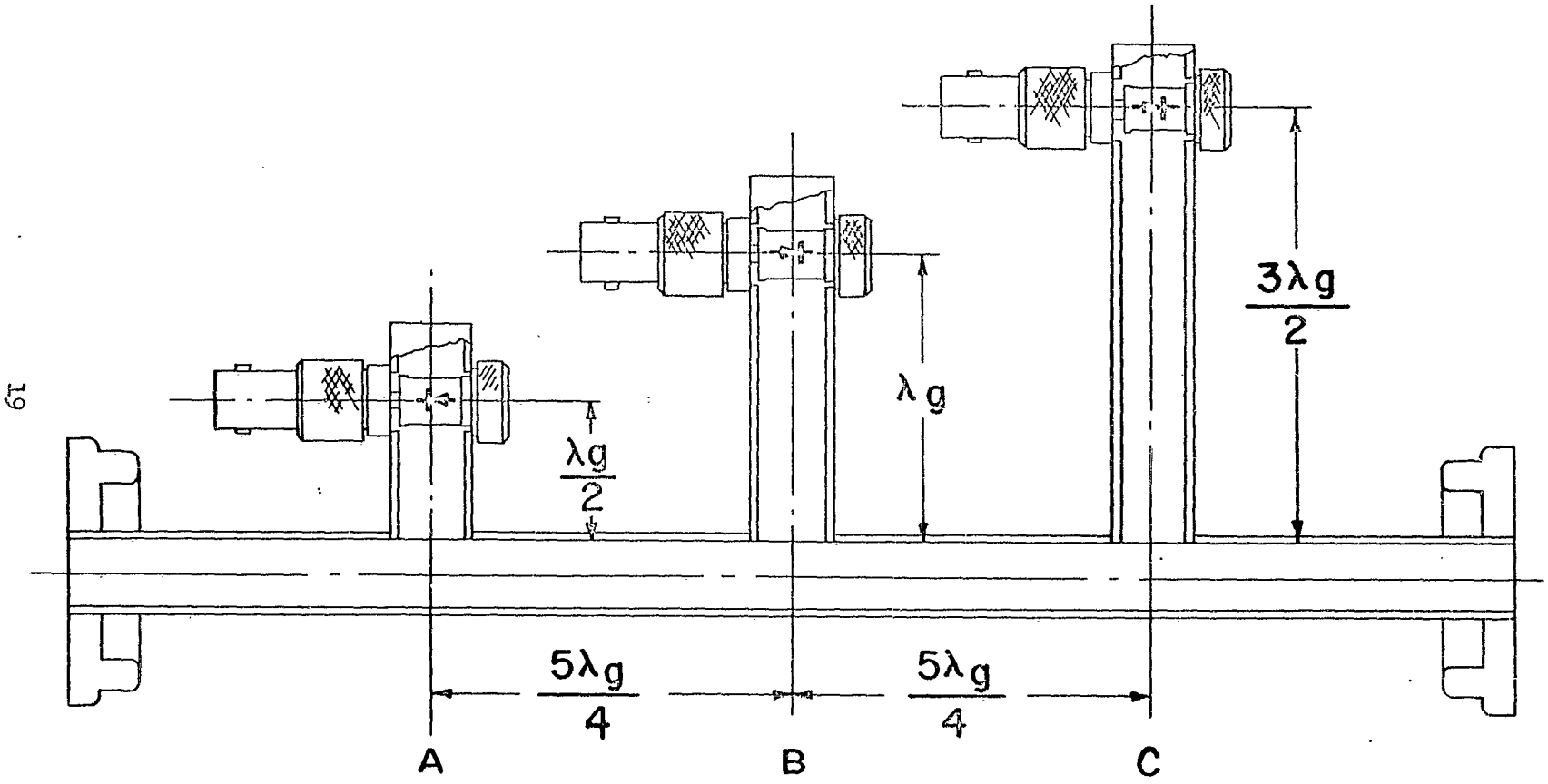

Fig. 10 Three-Element Limiter Showing Position of Diodes

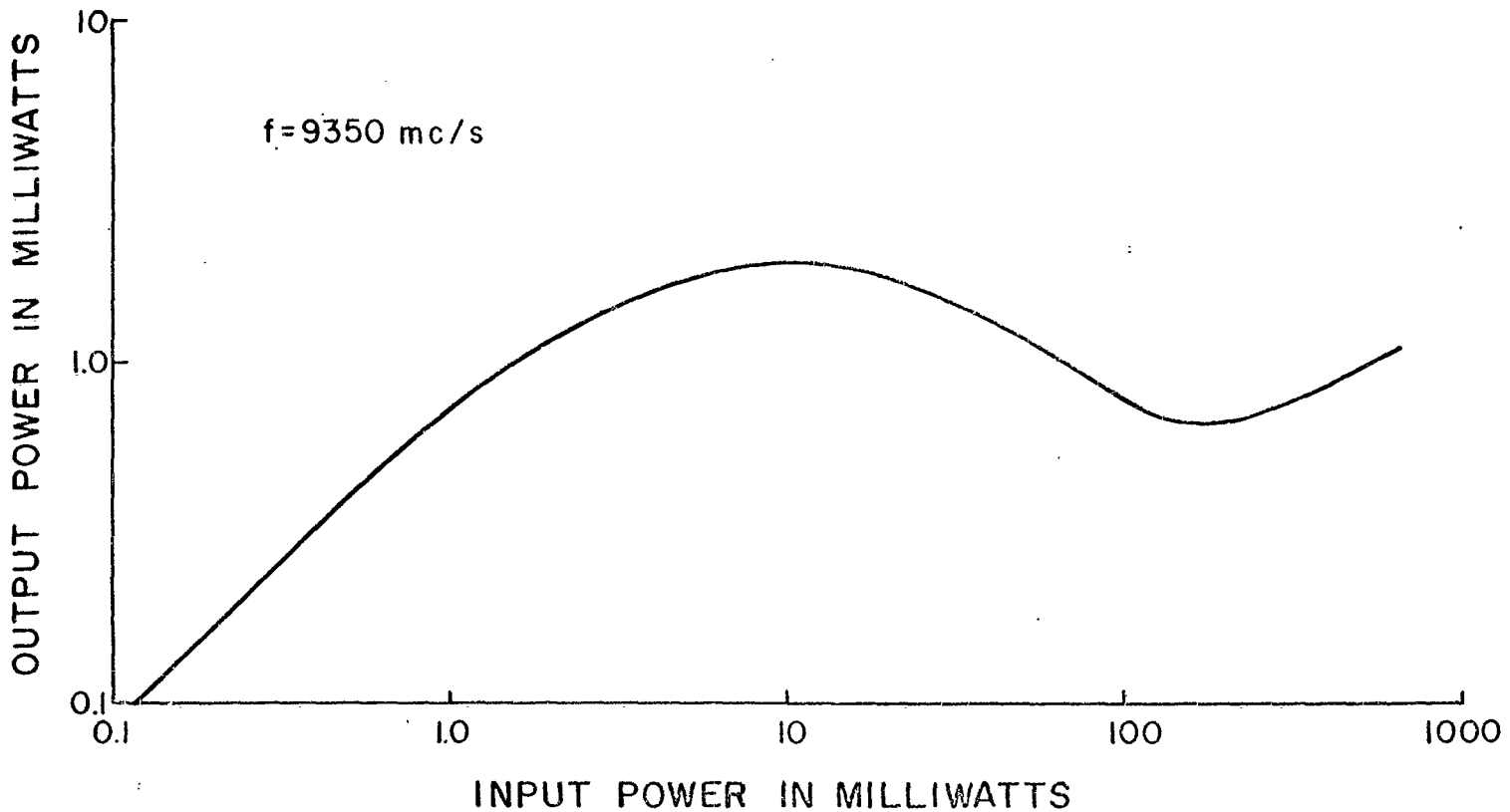

Fig. 11 Output Characteristic of Three-Element Limiter with First Diode 'Driving' Other Two Diodes

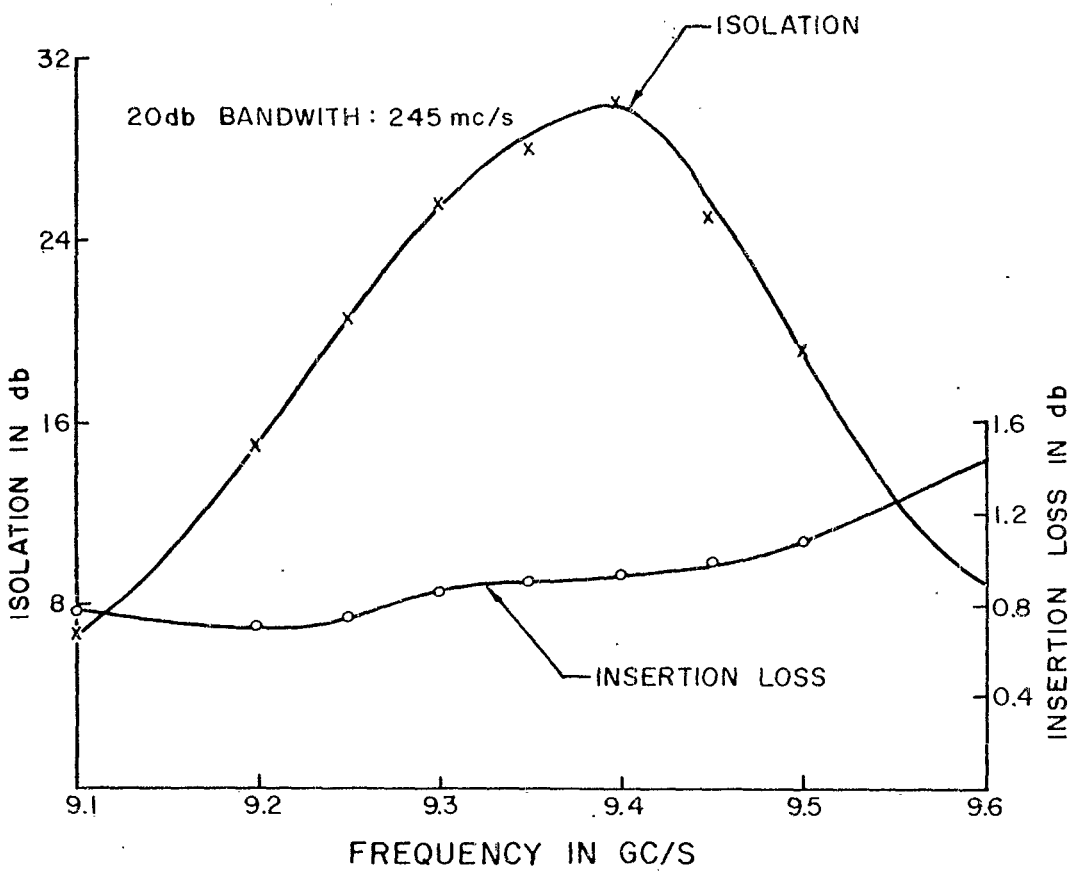

Fig. 12 Frequency Dependence of Three-Element Limiter with First Diode 'Driving' Other Two Diodes

DISTRIBUTION LIST

	Copies
Commanding General U. S. Army Electronics Command ATTN: AMSEL-AD Fort Monmouth, New Jersey	3
Office of the Assistant Secretary of Defense (Research and Engineering) ATTN: Technical Library Room 3E1065, The Pentagon Washington 25, D. C.	1
Chief of Research and Development Department of the Army Washington 25, D. C.	2
Chief, United States Army Security Agency ATTN: ACofS, G4 (Technical Library) Arlington Hall Station Arlington 12, Virginia	1
Commanding Officer U. S. Army Electronics Research and Development Activity ATTN: Technical Library Fort Huachuca, Arizona	1
Commanding Officer U. S. Army Electronics Research and Development Activity ATTN: SELWS-AJ White Sands, New Mexico	1
Commanding Officer U. S. Army Electronics Research Unit P. O. Box 205 Mountain View, California	1
Commanding Officer U. S. Army Electronics Materiel Support Agency ATTN: SELMS-ADJ Fort Monmouth, New Jersey	1
Commanding General U. S. Army Satellite Communications Agency ATTN: Technical Documents Center Fort Monmouth, New Jersey	1
Commanding Officer U. S. Army Engineer Research and Development Laboratories ATTN: Technical Documents Center Fort Belvoir, Virginia	1
Commanding Officer U. S. Army Chemical Warfare Laboratories ATTN: Technical Library, Building 330 Army Chemical Center, Maryland	1
Commanding Officer Harry Diamond Laboratories ATTN: Library, Building 92, Room 211 Washington 25, D. C.	1
Headquarters, United States Air Force ATTN: AFCIN Washington 25, D. C.	2
Rome Air Development Center ATTN: RAALD Griffiss Air Force Base New York	1
Headquarters Ground Electronics Engineering Installation Agency ATTN: ROZMEL Griffiss Air Force Base New York	1
Commanding General U. S. Army Materiel Command ATTN: R&D Directorate Washington 25, D. C.	2

Distribution List (Cont)

	Copies
Aeronautical Systems Division ATTN: ASAPRL Wright-Patterson Air Force Base Ohio	1
U. S. Air Force Security Service ATTN: ESD San Antonio, Texas	1
Headquarters Strategic Air Command ATTN: DOCE Offutt Air Force Base, Nebraska	1
Headquarters Research & Technology Division ATTN: RTH Bolling Air Force Base Washington 25, D. C.	1
Air Proving Ground Center ATTN: PGAPI Eglin Air Force Base, Florida	1
Air Force Cambridge Research Laboratories ATTN: CRXL-R L. G. Hanscom Field Bedford, Massachusetts	2
Headquarters Electronic Systems Division ATTN: ESAT L. G. Hanscom Field Bedford, Massachusetts	2
AFSC Scientific/Technical Liaison Office U. S. Naval Air Development Center Johnsville, Pa.	1
Chief of Naval Research ATTN: Code 427 Department of the Navy Washington 25, D. C.	1
Bureau of Ships Technical Library ATTN: Code 312 Main Navy Building, Room 1528 Washington 25, D. C.	1
Chief, Bureau of Ships ATTN: Code 454 Department of the Navy Washington 25, D. C.	1
Chief, Bureau of Ships ATTN: Code 686B Department of the Navy Washington 25, D. C.	1
Director U. S. Naval Research Laboratory ATTN: Code 2027 Washington 25, D. C.	1
Commanding Officer & Director U. S. Navy Electronics Laboratory ATTN: Library San Diego 52, California	1
Commander U. S. Naval Ordnance Laboratory White Oak Silver Spring 19, Maryland	1
Commander Armed Services Technical Information Agency ATTN: TISIA Arlington Hall Station Arlington 12, Virginia	20
USAELRDL Liaison Officer U. S. Army Tank-Automotive Center Detroit Arsenal Central Line, Michigan	1
USAELRDL Liaison Officer Naval Research Laboratory ATTN: Code 1071 Washington 25, D. C.	1
USAELRDL Liaison Officer Massachusetts Institute of Technology Building 26, Room 131 77 Massachusetts Avenue Cambridge 39, Massachusetts	1

Distribution List (Cont)

	Copies
USAELRDL Liaison Office Aeronautical Systems Division ATTN: ASDL-9 Wright-Patterson Air Force Base Ohio	1
U. S. Army Research Liaison Office Lincoln Laboratory P. O. Box 73 Lexington, Massachusetts	1
USAELRDL Liaison Officer Rome Air Development Center ATTN: RAOL Griffiss Air Force Base New York	1
USAELRDL Liaison Officer U. S. Army Combat Development Command, CDCLN-EL Fort Belvoir, Virginia	1
Chief, Bureau of Ships ATTN: Semiconductor Group Code 681A1A, Mr. A.H. Young Department of the Navy Washington 25. D. C.	1
USAEMSA Liaison Engineer USASCAJ APO 343 San Francisco, California	1
Technical Dir., SELRA/CS Headquarters, USAELRDL	1
USAELRDA-White Sands Liaison Office SELRA/LNW, USAELRDL	1
AFSC Scientific/Technical Liaison Office SELRA/LNA, USAELRDL	1
Corps of Engineers Liaison Office SELRA/LNE, USAELRDL	1
Marine Corps Liaison Office SELRA/LNR, USAELRDL	1

	Copies
USACDC Liaison Office SELRA/LNF, USAELRDL	2
Chief, Technical Information Division Headquarters, USAELRDL	6
USAELRDL Technical Documents Center SELRA/ADT, Hexagon	1
Commanding Officer U. S. Army Security Agency Processing Center, Deal Area	1
Chief Scientist U. S. Army Electronics Command ATTN: AMSEL-SC Fort Monmouth, N. J.	1
Director, Institute for Exploratory Research, USAELRDL	1
Director, Applied Physics Div., Surveillance Dept., USAELRDL	1
Actg. Director, Electronic Components Dept., USAELRDL	2
Actg. Director, Solid State & Frequency Control Div., EC Dept.	1
Dep. Director, Solid State & Frequency Control Div. EC Dept.	1
Chief, Technical Staff, Solid State & Frequency Control Div.	10
Chief, Piezoelectric Crystal & Circuitry Br., Solid State & Frequency Control Div.	10
Chief, Semiconductor & Micro- electronics Br., Solid State & Frequency Control Div.	10
Chief, Microwave & Quantum Electronics Br., Solid State & Frequency Control Div.	20
File Unit Nr. 1, Rm. 3D-116, Hexagon	1

(3) Army-Ft Monmouth,NJ-MON 1837-63

AD________ Div.________________________

Army Electronics Research and Development Laboratory, Fort Monmouth, N. J.
X-BAND SEMICONDUCTOR SWITCHING AND LIMITING USING WAVEGUIDE SERIES TEES, by V. J. Higgins.
March 63, 21 p. incl. illus. table, 20 refs.
(AELRDL Technical Report 2349)
(DA Task 3A99-21-001-03) Unclassified report

This report describes a new microwave semiconductor switching technique X-band. This technique uses various types of varactor diodes operating in a series mode. Series mode switching is obtained by cascading several E-plane tee junctions. Each tee is terminated in a fixed tuned crystal mount. A diode when inserted in its holder is spaced in an integral half guide wavelength from the junction of the series arm and the main waveguide, and each series arm is separated by odd integers of quarter wavelengths. Isolations of 30 to 48 db and insertion losses of 0.3 to 0.8 db have been obtained at a frequency of 9375 Mc/s. Details of a semiconductor X-band power limiter are given. The limiter consists of the same configuration as the switch except that it is not externally biased. Isolations of 20 to 30 db over a bandwidth of 180 to 250 Mc/s and insertion loss of 1.2 db and less over a 500 Mc/s bandwidth were noted.

UNCLASSIFIED

1. Switching Circuits--Microwave Semiconductor
2. Limiting Circuits--Microwave Power
3. Varactor Diodes
4. Silver-Bonded Germanium Diodes

I. V. J. Higgins
II. Army Electronics Research and Development Laboratory, Fort Monmouth, N. J.
III. DA Task 3A99-21-001-03

UNCLASSIFIED

AD________ Div.________________________

Army Electronics Research and Development Laboratory, Fort Monmouth, N. J.
X-BAND SEMICONDUCTOR SWITCHING AND LIMITING USING WAVEGUIDE SERIES TEES, by V. J. Higgins.
March 63, 21 p. incl. illus. table, 20 refs.
(AELRDL Technical Report 2349)
(DA Task 3A99-21-001-03) Unclassified report

This report describes a new microwave semiconductor switching technique X-band. This technique uses various types of varactor diodes operating in a series mode. Series mode switching is obtained by cascading several E-plane tee junctions. Each tee is terminated in a fixed tuned crystal mount. A diode when inserted in its holder is spaced in an integral half guide wavelength from the junction of the series arm and the main waveguide, and each series arm is separated by odd integers of quarter wavelengths. Isolations of 30 to 48 db and insertion losses of 0.3 to 0.8 db have been obtained at a frequency of 9375 Mc/s. Details of a semiconductor X-band power limiter are given. The limiter consists of the same configuration as the switch except that it is not externally biased. Isolations of 20 to 30 db over a bandwidth of 180 to 250 Mc/s and insertion loss of 1.2 db and less over a 500 Mc/s bandwidth were noted.

UNCLASSIFIED

1. Switching Circuits--Microwave Semiconductor
2. Limiting Circuits--Microwave Power
3. Varactor Diodes
4. Silver-Bonded Germanium Diodes

I. V. J. Higgins
II. Army Electronics Research and Development Laboratory, Fort Monmouth, N. J.
III. DA Task 3A99-21-001-03

UNCLASSIFIED

AD________ Div.________________________

Army Electronics Research and Development Laboratory, Fort Monmouth, N. J.
X-BAND SEMICONDUCTOR SWITCHING AND LIMITING USING WAVEGUIDE SERIES TEES, by V. J. Higgins.
March 63, 21 p. incl. illus. table, 20 refs.
(AELRDL Technical Report 2349)
(DA Task 3A99-21-001-03) Unclassified report

This report describes a new microwave semiconductor switching technique X-band. This technique uses various types of varactor diodes operating in a series mode. Series mode switching is obtained by cascading several E-plane tee junctions. Each tee is terminated in a fixed tuned crystal mount. A diode when inserted in its holder is spaced in an integral half guide wavelength from the junction of the series arm and the main waveguide, and each series arm is separated by odd integers of quarter wavelengths. Isolations of 30 to 48 db and insertion losses of 0.3 to 0.8 db have been obtained at a frequency of 9375 Mc/s. Details of a semiconductor X-band power limiter are given. The limiter consists of the same configuration as the switch except that it is not externally biased. Isolations of 20 to 30 db over a bandwidth of 180 to 250 Mc/s and insertion loss of 1.2 db and less over a 500 Mc/s bandwidth were noted.

UNCLASSIFIED

1. Switching Circuits--Microwave Semiconductor
2. Limiting Circuits--Microwave Power
3. Varactor Diodes
4. Silver-Bonded Germanium Diodes

I. V. J. Higgins
II. Army Electronics Research and Development Laboratory, Fort Monmouth, N. J.
III. DA Task 3A99-21-001-03

UNCLASSIFIED

AD________ Div.________________________

Army Electronics Research and Development Laboratory, Fort Monmouth, N. J.
X-BAND SEMICONDUCTOR SWITCHING AND LIMITING USING WAVEGUIDE SERIES TEES, by V. J. Higgins.
March 63, 21 p. incl. illus. table, 20 refs.
(AELRDL Technical Report 2349)
(DA Task 3A99-21-001-03) Unclassified report

This report describes a new microwave semiconductor switching technique X-band. This technique uses various types of varactor diodes operating in a series mode. Series mode switching is obtained by cascading several E-plane tee junctions. Each tee is terminated in a fixed tuned crystal mount. A diode when inserted in its holder is spaced in an integral half guide wavelength from the junction of the series arm and the main waveguide, and each series arm is separated by odd integers of quarter wavelengths. Isolations of 30 to 48 db and insertion losses of 0.3 to 0.8 db have been obtained at a frequency of 9375 Mc/s. Details of a semiconductor X-band power limiter are given. The limiter consists of the same configuration as the switch except that it is not externally biased. Isolations of 20 to 30 db over a bandwidth of 180 to 250 Mc/s and insertion loss of 1.2 db and less over a 500 Mc/s bandwidth were noted.

UNCLASSIFIED

1. Switching Circuits--Microwave Semiconductor
2. Limiting Circuits--Microwave Power
3. Varactor Diodes
4. Silver-Bonded Germanium Diodes

I. V. J. Higgins
II. Army Electronics Research and Development Laboratory, Fort Monmouth, N. J.
III. DA Task 3A99-21-001-03

UNCLASSIFIED