UNCLASSIFIED

AD 404 798

DEFENSE DOCUMENTATION CENTER

FOR

SCIENTIFIC AND TECHNICAL INFORMATION

CAMERON STATION, ALEXANDRIA, VIRGINIA

UNCLASSIFIED

NOTICE: When government or other drawings, specifications or other data are used for any purpose other than in connection with a definitely related government procurement operation, the U. S. Government thereby incurs no responsibility, nor any obligation whatsoever; and the fact that the Government may have formulated, furnished, or in any way supplied the said drawings, specifications, or other data is not to be regarded by implication or otherwise as in any manner licensing the holder or any other person or corporation, or conveying any rights or permission to manufacture, use or sell any patented invention that may in any way be related thereto.

404798

6.3-3-5

CATALOGED BY ASTIA
AS AD NO. 404798

US ARMY ELECTRONICS RESEARCH & DEVELOPMENT ACTIVITY

PRECISION SYNCHRONIZATION OF RADARS
PHASE I

BY

WILLIS S. PARSONS

USA ERDA-21

MAY 1963

DDC
MAY 2 1963

WHITE SANDS MISSILE RANGE
NEW MEXICO

8.12

(4) $ 8,10
(5) 948 500

(6) PRECISION SYNCHRONIZATION OF RADARS,
PHASE I,

(10) BY

WILLIS S. PARSONS.

(11) May 63
(12) 21p.
(13) NA

(18) WSMR

(19)
USA ERDA-21

MAY 1963

(20) 11
(21) NA

(16)
DA Project 1-G-2-50206-D-241

(17) NA

INSTRUMENTATION DEPARTMENT
U. S. ARMY ELECTRONICS RESEARCH AND DEVELOPMENT ACTIVITY
WHITE SANDS MISSILE RANGE
NEW MEXICO

ABSTRACT

~~This report discusses~~ a method of synchronizing radar systems by use of atomic oscillators is discussed. Synchronization will be accomplished by use of these oscillators and the microwave system of the synchronized radars. ~~The report discusses~~ the laboratory analysis of the oscillators used is also discussed.

CONTENTS

	PAGE
ABSTRACT	iii
INTRODUCTION	1
BACKGROUND	1
OBJECTIVES	2
DISCUSSION	2
GENERAL	2
SYNCHRONIZATION SYSTEMS	5
RADAR SYNCRHONIZATION REQUIREMENTS	11
LABORATORY ANALYSIS OF ATOMIC OSCILLATORS	12
SYNCHRONIZATION PROCEDURES	13
CONCLUSIONS	14
BIBLIOGRAPHY	19
ACKNOWLEDGEMENTS	21
APPENDICES	
A. VELOCITY OF LIGHT IN FREE SPACE	A1
B. TIME SCALES	B1
GENERAL	B1
EFFECT OF RADAR SYNCHRONIZATION USING DIFFERENT TIME SCALES	B2
C. LABORATORY ANALYSIS OF OSCILLATORS	C1
GENERAL	C1
INDIVIDUAI TEST RESULTS	C1
TABLE I, CESIUM BEAM OSCILLATOR ANALYSIS	C33

D. FREQUENCY SYNTHESIZER---------- D1

E. PRF GENERATOR AND CONTROL SYSTEM---------- E1

ILLUSTRATIONS

TITLE	PAGE
Crystal Oscillator	4
Typical Rubidium Oscillator Variation for 90 Day Period	6
Cesium Beam Oscillator	7
Rubidium Oscillators	8
Precision Synchronization	15
Radar Synchronization Using Airborne Target	16
Normal Bench Test Set-up	C2
Frequency Multiplier Analysis	C4
Crystal Oscillator Analysis	C5
Rubidium Oscillator Analysis, 19 Mar 63	C6
Rubidium Oscillator Analysis, 20 Feb 63	C7
Rubidium Oscillator Analysis, 28 Feb 63	C8
Rubidium Oscillator Analysis, 4 Mar 63	C9
Rubidium Oscillator Frequency Adjustment	C10
Cesium Beam Oscillator Analysis, 17 Sep 62	C12
Cesium Beam Oscillator Analysis, 20 Aug 62	C13
Cesium Beam Oscillator Analysis, 17 Sep 62	C14
Cesium Beam Oscillator Analysis, 13 Dec 62	C15
Cesium Beam Oscillator Analysis, 14 Dec 62	C16
Cesium Beam Oscillator Analysis, 14 Dec 62	C17
Null Comparison A, Cesium Beam Oscillators	C18
Null Comparison B, Cesium Beam Oscillators	C19
Beam Tube Response Curve	C20
Rubidium Oscillator vs Cesium Beam Oscillator	C22
Calibration Curve, Rubidium Oscillator SN 128	C23
Calibration Curve, Rubidium Oscillator SN 124	C24
Calibration Curve, Cesium Beam Oscillator SN S206	C25
Calibration Curve, Cesium Beam Oscillator SN S207	C26
Rubidium Oscillator, SN 128 vs Cesium Beam Oscillator SN S206	C27
Cesium Beam Oscillator, SN 128 vs Cesium Beam Oscillator, SN S207	C28
Rudibium Oscillator, SN 124 vs Rubidium Oscillator, SN 128	C29
Rubidium Oscillator, SN 124 vs Cesium Beam Oscillator, SN S206	C30
Frequency Synthesizer, Front View	D2
Frequency Synthesizer, Block Diagram	D3
Frequency Synthesizer, Card 1	D4
Frequency Synthesizer, Card 2	D5
Frequency Synthesizer, Card 3	D6
Frequency Synthesizer, Card 4	D7
Frequency Synthesizer, Card 5	D8
Frequency Synthesizer, Card 6	D9
Frequency Synthesizer, Card 7	D10

Frequency Synthesizer, Card 8---------- D11
Frequency Synthesizer, Card 9---------- D12
Frequency Synthesizer, Card 10---------- D13
PRF and Synchronization Control Unit---------- E4
PRF Countdown FF---------- E5
Normal PRF Generator Gates---------- E6
PRF Control Patch Panel Layout---------- E7
PRF Control, Normal, In, Out---------- E8
32,000 Yd. PRF Shift---------- E9
Alternating PRF Control, One of Two Preset---------- E10

INTRODUCTION

BACKGROUND

This program was initiated at the request of the SIGWS-RSS-RA (now Radar Division, ROD) Branch by DF, dated 29 December 1961, subject "Research and Development of a Radar Synchronization System." The referenced DF stated an urgent need for a synchronization system for the AN/FPS-16 Radar System, White Sands Missile Range, and requested that SIGWS-RD-EID (now the Radar Systems Division, Instrumentation Department, USA ERDA) develop the system. It was determined that a large percentage of range missions require multiple radar usage, and that a definite performance degradation was caused by pulse interference or beacon drop-out. It was further requested that the Radar Synchronization System provide a

(1) More stable 81,959 cycle signal than is provided by the existing radar ranging crystal.

(2) Synchronization signal to the AN/FPS-16 radar that will not degrade either the frequency standard (ranging crystal) or the performance of the radar.

(3) Means of synchronizing all radars in the control complex.

The synchronization of radars at White Sands Missile Range has been a continuing area of study since the early 1950's. A loosely synchronized system for the chain radar system at WSMR was developed by the Equipment Design Section, Engineering Branch, Radar Program, of the U. S. Army White Sands Signal Agency. This system was developed to permit radars at different locations to interrogate radar beacons without interference. It used a sine wave, generated at the radar's pulse repetition frequency (PRF), which was phase locked to the radar transmitter trigger. The sine wave signal was transmitted over the chain system microwave link.

This loose synchronization system was determined to be undesirable for use with the AN/FPS-16 type radars which were installed at WSMR subsequent to its development. This is particularly true when considering the requirement for a tight synchronization system for radars.

In 1959, Project WOSAC (World Wide Clock Synchronization Experiment) was conducted by the U. S. Army Research and Development Laboratories, Fort Monmouth, New Jersey. During this experiment atomic clocks were flown between widely separated sites, proving these atomic clocks (frequency

standards) could be used for the development of a tight synchronization system. Synchronization was held to better than five microseconds.[1]

OBJECTIVES

To accomplish the previously cited requirements for this project the following program was established.

Phase I

Determination of optimum methods of synchronization, investigating the types of oscillators and/or other available means of precision synchronization available.

Phase II

Analysis of, and obtaining data from a bi-static and multi-static system. Conduct studies on the transmission of various forms of data by means of a radar link.

Phase III

Conduct studies to develop a system compatible to future radar systems utilizing atomic oscillators, an automatic phasing system for the PRF, and/or a computer controlled PRF.

D I S C U S S I O N

GENERAL

Since synchronization of radar systems requires ranging oscillators (timing oscillators) both crystal and atomic type oscillators were considered in the determination of developing such a system.

The improvement of the basic ranging oscillators will improve the measuring rule. It will not correct for atmospheric disturbance and other variations external to the radar. An analysis of the sources of the ranging error attributed to the radar indicates that at one million yards the largest error caused by the radar was due to crystal frequency

1. Reder, F. H., Brown, P., Winkler, G., and Bichart, C., "Final Results of a World Wide Clock Synchronization Experiment (Project WOSAC), USARDL, Ft. Monmouth, N.J., Proceedings of the 15th Annual Symposium on Frequency Control.

drift and frequency instability.[2]

Crystal Oscillators

The AN/FPS-16 Radar uses a crystal cut to a frequency of 81.959 Kc and is accurate to one part in 10^6. Although some standard crystals are more accurate, the best crystal known to be obtainable at this frequency is accurate to one part in 10^7. Standard crystals require frequency synthesizers to obtain a frequency of 81.959 Kc.

The best standard crystal oscillators available today are accurate to one part of 10^{10} per day. Crystals of this accuracy cost approximately $10,000. This type crystal oscillator requires external synchronization every 20 minutes to maintain accuracies to .1 microsecond. To maintain one microsecond accuracy, synchronization from an outside source must be provided every three hours. Any crystal that is not completely slaved cannot be trusted for a period of two to three hours following frequency adjustment.[3] All crystals have fluctuations superimposed upon their aging characteristics. Atomic oscillators, to be discussed more fully later, may have fluctuations but do not show aging characteristics. The line about which they fluctuate should have a zero slope as a function of time.[4] The crystal oscillator used in this study is shown in Figure 1.

Atomic Oscillators

Development of ultra-stable oscillators, of the atomic variety, has made it feasible to provide tight, or precise, synchronization for the complete radar system at White Sands Missile Range and is adaptable to a world wide radar system. These oscillators are free of the drift characteristics normally effecting crystal oscillators. The use of atomic microwave resonance of the rubidium or cesium atom to slave crystal oscillators overcomes the short term variations inherent to atomic microwave units

2. "Velocity Measurements by Radar Means," Interim Report, Radio Corporation of America, Moorestown, N. J., 31 May 1959.
3. Winkler, G. M. R., "High-Precision Frequency and Time Interval Measurement Techniques," Paper Nr. 11, Atomic Frequency Symposium, presented at WSMR, 2 November 1961.
4. Searles, C.E., and Brown, P., "Evaluation of Atomic Frequency Standards," USARDL Tech Report 2298, U.S. Army R&D Laboratories, Ft. Monmouth, N.J., May 1962.

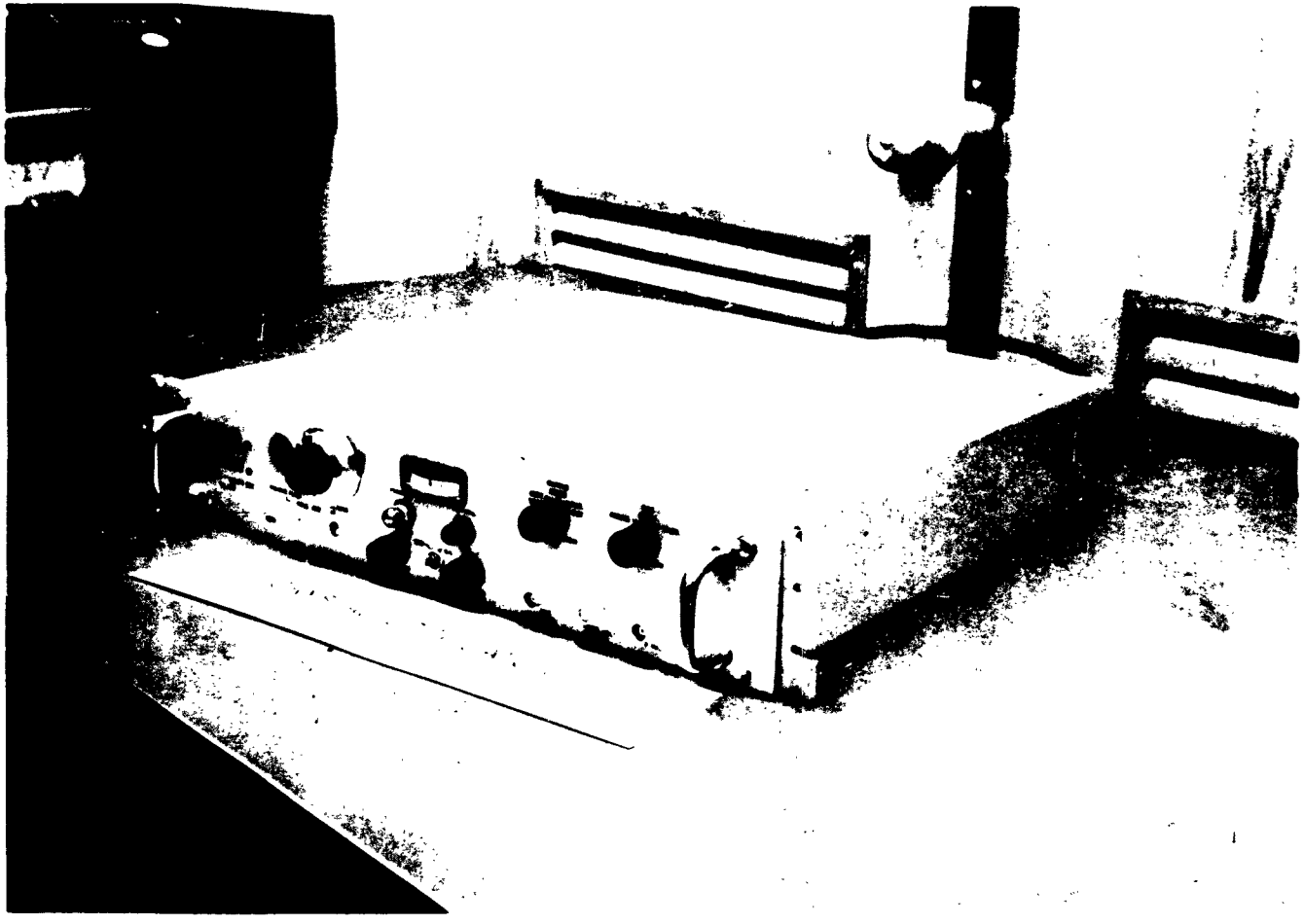

Figure 1 CRYSTAL OSCILLATOR

(This combination is considered for purposes of this report as an atomic oscillator.). The advantages of atomic resonance and crystal oscillators are obtained in the atomic oscillator. A typical atomic oscillator output vs. crystal oscillator with aging effect is shown in Figure 2.

The cesium beam oscillators (a type of atomic oscillator analyzed for use on this project) were developed under a Signal Corps Contract DA 36-039-SC-7486, 84935, and 84958 (Figure 3). They are primary standards, stable to several parts in 10^{11} and are accurate to better than one part in 10^{9}. They may be calibrated to parts in 10^{11}. Cesium beam oscillators may have a slight frequency offset. Experimentation with two of these oscillators (SN S206 and S207) have shown that they can be adjusted to a point where they are together in frequency.[5]

The rubidium oscillators (another of the atomic variety) developed for this project (Figure 4) can be adjusted to more than two parts in 10^{9}. They can hold the frequency setting over ninety days. This greatly simplifies the adjustment and setup required for a precision synchronization system. The rubidium oscillators require little power, making it easy to provide portable operation. The oscillators when disconnected from the primary 60 cycle power supply will continue to operate for more than eight hours on a battery supply, allowing for a system check by a portable oscillator method. The complete system can also be operated from an airplane's 24 volt power supply, or a 100 V, 400 cycle supply, whichever is available. It can be interchanged, using batteries, from one power source to another without being turned off or losing synchronization.

SYNCHRONIZATION SYSTEMS

There are three possible courses to be followed in providing synchronization for radar systems. These may be categorized generally as follows:

(1) Slaved Synchronization Systems,

(2) Independent Oscillator Synchronization System,

(3) Combination Synchronization System.

5. Experimentation conducted at the U.S. Army Research and Development Laboratories, Ft. Monmouth, N. J., indicates two cesium beam oscillators (S201 & S204) produced an accuracy and precision of 1.4×10^{-11} and 5.4×10^{-12} respectively. Searles, C. E., and Brown, P., "Evaluation of Atomic Frequency Standards," May 1962.

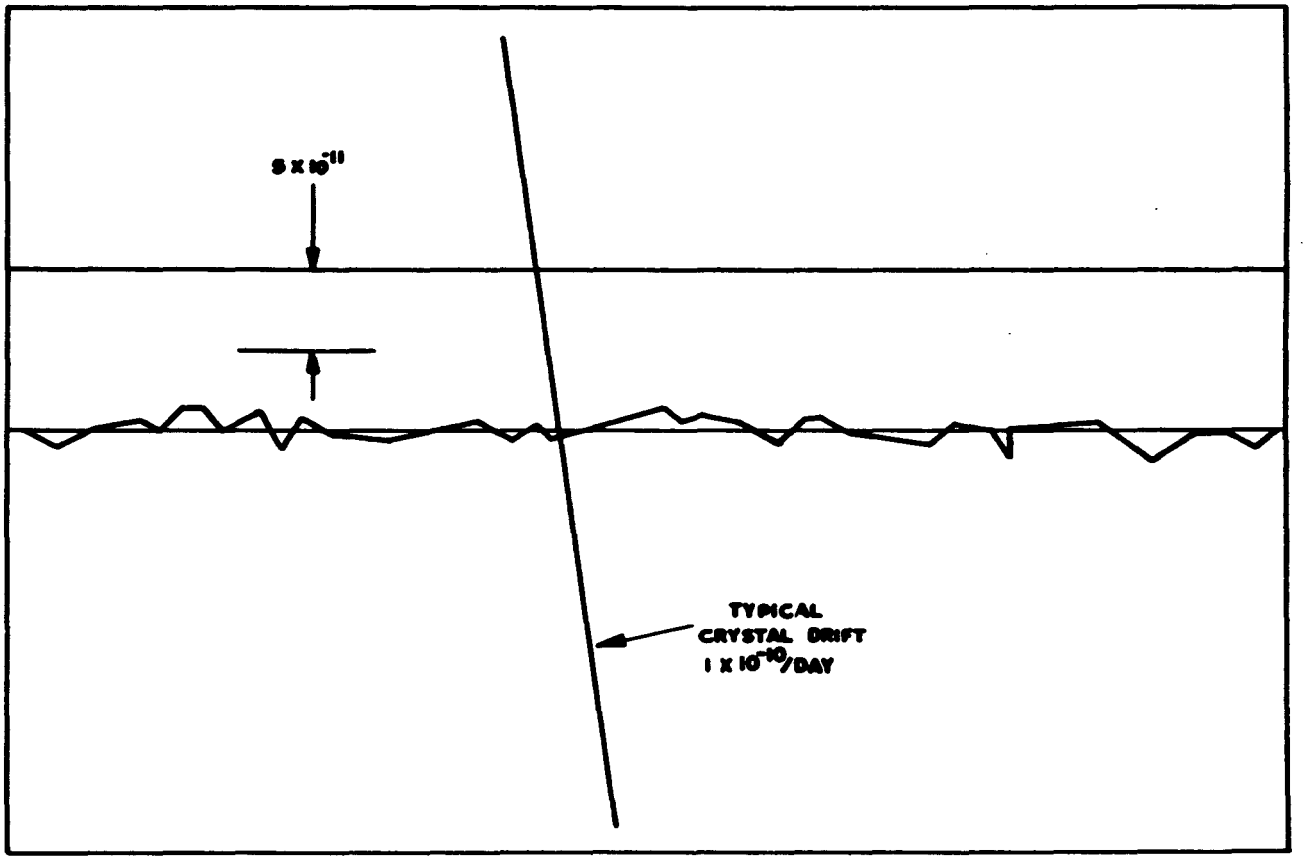

Figure 2 TYPICAL RUBIDIUM OSCILLATOR VARIATION FOR 90 DAY PERIOD

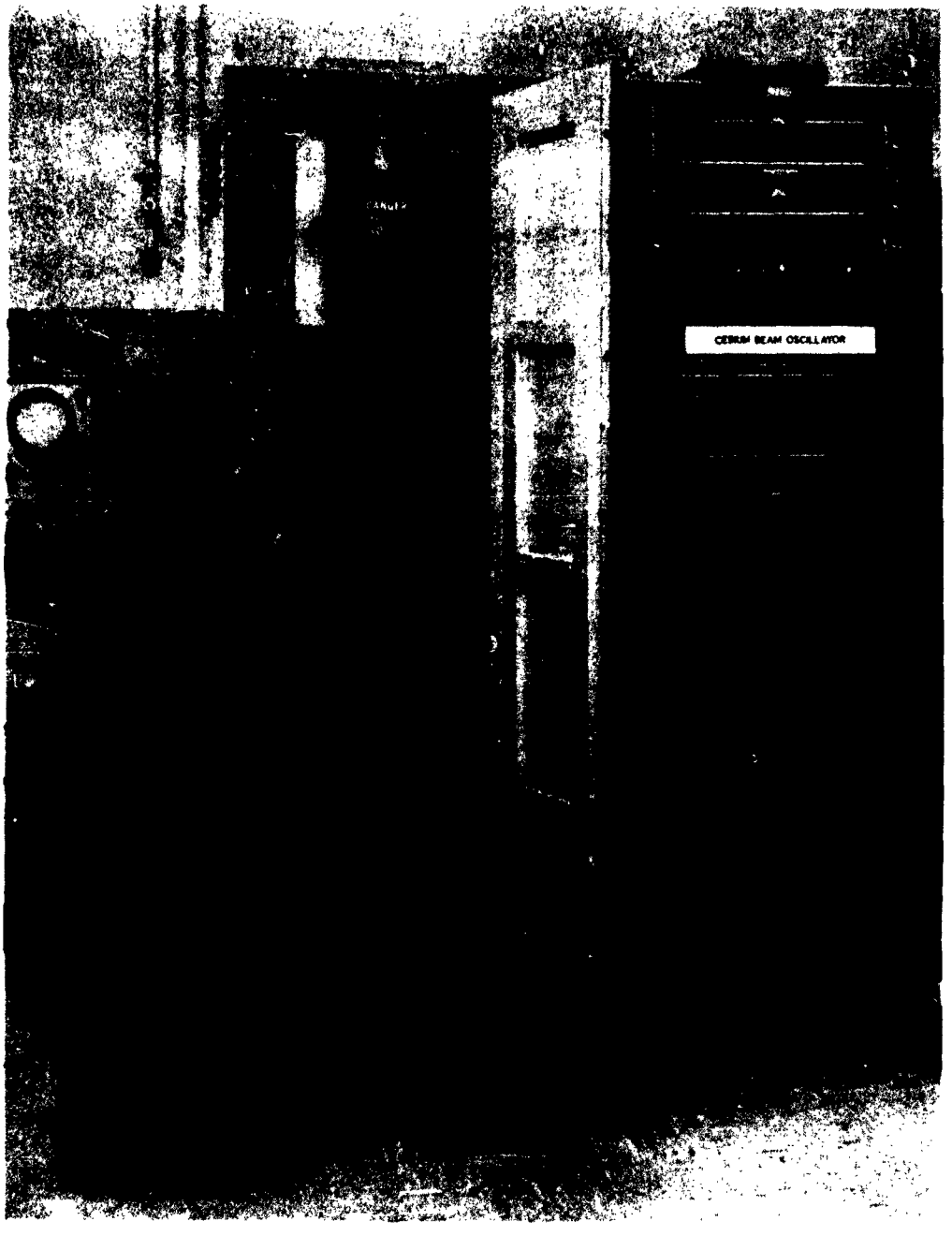

Figure 3 **CESIUM BEAM OSCILLATOR**

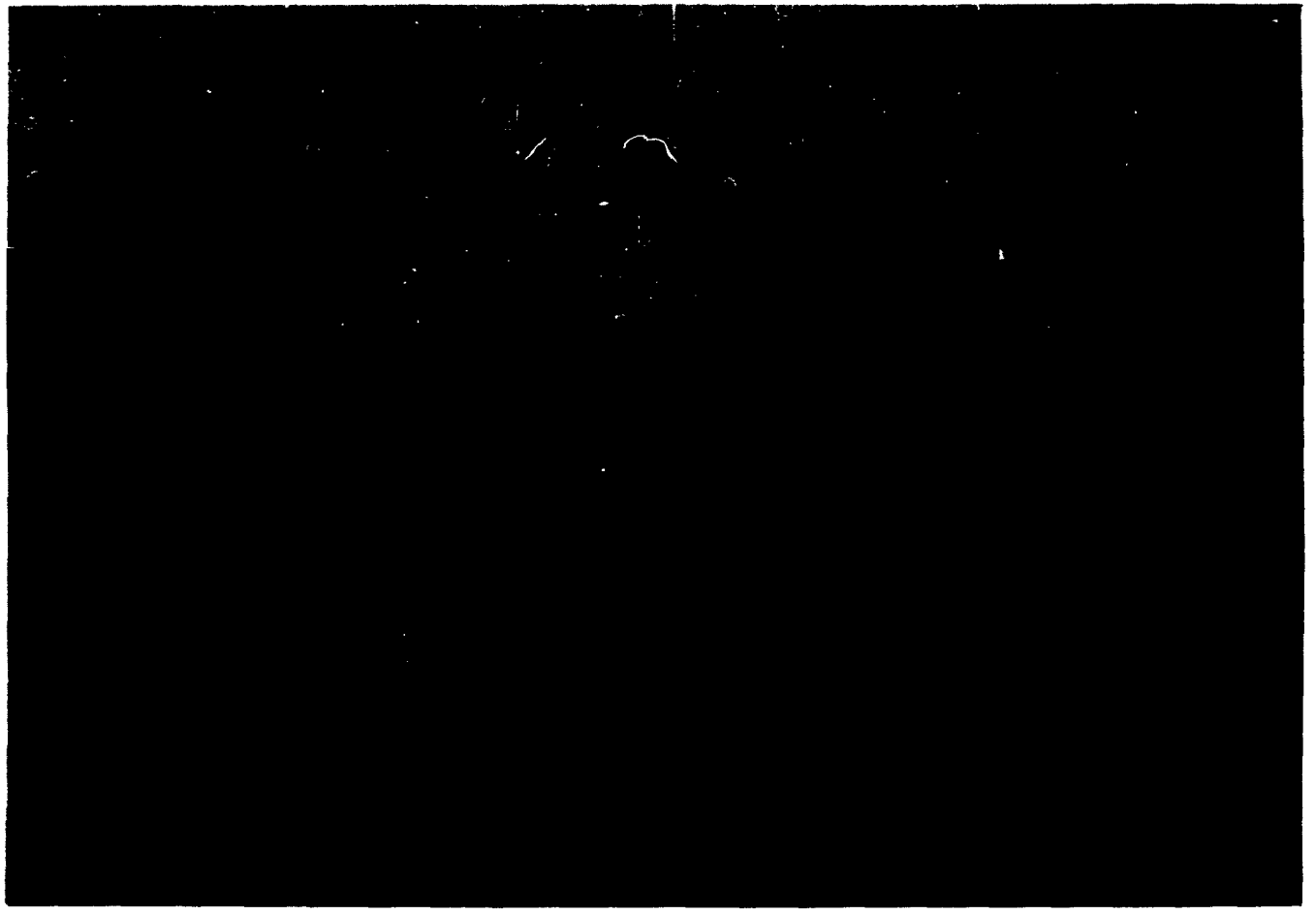

Figure 4 RUBIDIUM OSCILLATORS

Slaved Synchronization Systems

Slaved Synchronization Systems include, but are not limited to, LORAN-C, various communication circuits, and existing timing systems. In case of the LORAN-C system we have a navigational system capable of synchronizing oscillators. A LORAN-C receiver functions as a slaved oscillator and a trigger generator.[6] It uses a standard 100 Kc radio link to provide synchronization. This link is subject to the normal problems of ionosphere scatter. Where ground signals are used the separating of the combination of ground and ionosphere signals is required. Both the sky wave and the ground wave are affected by variations in atmospheric refraction, and the conductivity and the dielectric constant of the earth. Throughout the western portions of the United States conductivity varies to a considerable degree.

"The synchronization accuracy of the present LORAN-C system could be improved by the use of better oscillators and longer integration times."[7] Using one minute integration time, holding accuracy of the system requires an oscillator accurate to one part in 10^9. Adapting the LORAN-C to a synchronization system for world wide use would require additional transmission facilities, and exact time-position relationships between transmitters and receivers.

Under optimum conditions transmission of highly accurate timing signals over standard telephone facilities will jitter $\pm$40 microseconds and jitter increases when the signals used are square waves. This requires elimination of all frequency sidebands outside the communication systems bandpass. This also applies to all types of signals including sine waves. The stability of the signals can vary over 250 microseconds because of system variations.[8] Open wire lines, will cause even larger variations than those cited above due to the variation in capacitance between the lines. Should radio links be used, the effects noted in the discussions on the LORAN-C apply. For maximum accuracy, the same type oscillators used with the LORAN-C would be required at all sites. Radio receivers would also be required at all sites.

6. Doherty, R. H., and Others, "Timing Potentials of LORAN-C," Memo Report National Bureau of Standards PM-85-40, U.S. Dept. of Commerce, Boulder Laboratories, Boulder, Colorado, 1 June 1960.
7. Doherty, R. H., and Others, "Timing Potentials of LORAN-C."
8. Nylund, H. W., Byorick, R. S., and Others, "Plan for Future Range Instrumentation Communication Facilities at White Sands Proving Ground," Dept. 3223, Bell Telephone Laboratories, June 1956.

Existing timing systems at the White Sands Missile Range use square waves. The proposed IRIG Timing System will eventually use LORAN-C techniques or microwave communications channels. Information concerning LORAN-C equipment has been previously discussed. Broadband microwave systems are extremely costly and are subject to the same atmospheric variations that affect other equipment in the same frequency range. Narrow band microwave channels are also subject to variations common to carrier type equipment. Existing timing systems use exact intervals of the second and are not easily adaptable to a synchronization system for radars.

Independent Oscillator Systems

A synchronization system requires some method of determining the time-position relationship or time correlation between radars or radar complexes. An independent oscillator system, defined as one that has never had that type correlation, would operate randomly in relation to others. When a method of correlation is made the system becomes the combination system discussed hereafter.

Combination Synchronization Systems

A combination of the above discussed systems, using the best features of these systems will provide the optimum synchronization for radars locally or in circumstances requiring world wide synchronization. Use of atomic oscillators, due to their lack of aging characteristics, and their moderately higher cost, were chosen to be used as a semi-independent (local ranging) oscillators at the radar complexes. Synchronization will be accomplished by use of the existing, extremely high powered, pulse microwave radar transmitter and radar receiver. A portable atomic oscillator will be used to check synchronization as an alternate means. It can and will be used in cases where radars, being synchronized, cannot receive each other's transmitter output or the radars cannot track the same airborne targets and/or satellites.

Using this method of synchronization atmospheric refraction errors affect the system in the same way they would any microwave radio link. It does, however, eliminate the purchase of additional transmitting and receiving equipment. Because of the radar ranging system, refraction errors can be corrected to 1 yard (6 nanoseconds) in fifty miles.[9] The AN/FPS-16

9. Dixon, H. M., "A First Order Approximation Correction for Refraction Errors in Radar Range Measurements," Tech Report 18F, WSSCA, WSMR, N. M., 1 August 1957.

radar transmitter normally has 20 to 30 nanoseconds jitter, but the radar ranging circuit filters this jitter through an equivalent 10 cycle filter and range precision of ±1/2 yard can be obtained. This type system incorporates all the advantages of the LORAN-C timing proposal, but requires position accuracies only to the radars, and not to an outside (LORAN-C) transmitter.

RADAR SYNCHRONIZATION REQUIREMENTS

To completely synchronize the AN/FPS-16 type radars, the ranging time base of the radars must be identical, and the PRF periods must be the same or exact multiples thereof. The frequency selected for the ranging time base at White Sands Missile Range was 81.959 Kc.[10]

Radar Ranging

Radars range by timing a single pulse from the transmitter to the target and return. Range can also be determined by timing a transmitted pulse from one radar to its reflected return as received at other radars. The AN/FPS-16 radars require system synchronization using multiples of their ranging frequencies, because free running oscillators are used. Another family of radars use gated oscillators, that are turned on and off, requiring a single pulse to synchronize them. Use of this type gating would require a major modification to the AN/FPS-16 ranging system, and is not adaptable to "nth" time around ranging, or the AN/FPS-16 Digital Ranging and Measurement (DIRAM) System. Atomic oscillators can be used for synchronization of either of the above ranging systems, without major modification to their ranging systems.

Frequency Selection

As stated earlier, the ranging oscillator frequency of the AN/FPS-16 radar at WSMR is 81.959 Kc. This frequency is the average time for a radar set to measure 2000 yards in range, assuming the index of refraction is 1.000064. Other missile ranges use a different average index of refraction and vary the frequency output of the ranging oscillator accordingly.[11] The free space velocity of light is 327, 857.064 ±437

---

10. Pietrasanta, A., "Analysis of Radar Errors-Index of Refraction Study," Tech Report Nr. 4, WSSCA, WSMR, N. M., 12 February 1954.
11. Pacific Missile Range used an index of refraction of 1.00002 (81.94788 Kc) originally. They are currently using a frequency of 81.959 Kc; the Atlantic Missile Range uses an index of refraction of 1.00001 (81.95607 Kc).

yds/second.[12] Using this figure for the free space velocity of light, the ranging frequency becomes 81.964270 Kc/ATOT.[13]

To meet the need of varied frequency selection, a frequency synthesizer was designed as part of the overall synchronization unit. This synthesizer will change the basically accepted output frequency of 81.959 by one cycle steps. The lowest output of this synthesizer will be 81.954 Kc, with a normal upper limit of 81.964 Kc. It will additionally provide for an output of 81.964270 Kc which provides for a ranging frequency required using the velocity of light in free space as the determining factor without regard to index of refraction corrections. (Appendix D).

The synthesizer would have to be changed in design to provide the required output for radars developing a metric range base from a continuously running oscillator. A two kilometric range interval would require a frequency output of 74.948125 Kc from either the synthesizer or a ranging oscillator.

Pulse Repetition Frequency Selection

Any synchronization system including AN/FPS-16 radars as part of the system must use a direct countdown of their ranging frequency since the pulse repetition frequency used by the AN/FPS-16 radars is always a direct countdown of the ranging frequency. The synchronization system must be completely flexible and provide for the basic PRFs of the AN/FPS-16 radar and for the IRIG and other special requirements.

This precision synchronization system cannot be used between radars using the metric and English systems of range measurement because of the difference in PRF requirements, unless a loose synchronization system, or an automatic PRF phasing system, can be used to integrate metric and English ranging systems with a resultant loss in precision.

LABORATORY ANALYSIS OF ATOMIC OSCILLATORS

To determine the individual characteristics of the various oscillators, crystal and atomic (cesium beam and rubidium), laboratory tests were

12. McGraw Hill Publishing Co., N. Y., N. Y., "Science and Technology Encyclopedia," 1962.
13. ATOT is the normal abreviation used to denote time as indicated from the atomichron time scale.

made (Appendix C). In this report, the cesium beam oscillators are considered to be primary standards, while the crystal and rubidium oscillators are considered to be secondary standards.[14]

The analysis of crystal oscillators was small by comparison to that of the atomic variety. It was felt that sufficient knowledge of crystal oscillators was available from other sources and that any additional analysis would be repetitious.

The laboratory analysis of the oscillators was accomplished by heterodyning the outputs of one oscillator against another and recording the beat frequency. Each oscillator was compared with a like unit and with two other types of oscillators. The heterodyning determined short term variations and the individual characteristics of the oscillators. Other general characteristics of the atomic oscillators are given in the previously referenced USARDL Technical Report 2298.[15]

The cesium beam oscillators have considerable phase variation caused by the mechnaical servo loop. This type variation is largely reduced when using the electronic servo loop, and the higher signal-to-noise ratio of the rubidium oscillators.

SYNCHRONIZATION PROCEDURES

Oscillators

The synchronization of atomic oscillators over long periods of time requires two steps.

(1) Correction of any fractional period offset, usually with a resolver.

(2) Correction of frequency differences of the oscillators.

To determine any fractional period offset, the output frequencies should be visually displayed or determined from a phase meter. When the outputs are out of phase, correction is made by shifting one of the outputs until they are exactly in phase.

14. Reder, F. H., "Atomic Frequency Standards," Electronics Magazine, Vol. 35, Nr. 47, McGraw Hill Publishing Co., Albany, N.Y., 23 November 1962, and Reder, F. H., "Atomic Clocks and their Applications," USARDL Tech Report 2230, USARDL, Ft. Monmouth, N. J.
15. Searles, C. E., and Brown, P., "Evaluation of Atomic Frequency Standards."

To determine the frequency difference, two oscillators are heterodyned and the beat cycle recorded. To reduce the frequency difference to less than one part in 10^{11} requires the comparison of the 100 Kc, 1 Mc or 5 Mc synthesized outputs multiplied to 100 Mc for a minimum of three hours.

Radar Synchronization

Synchronization and checking of synchronization is accomplished by use of the radar microwave system (Figures 5 and 6). It requires the use, at the different radars, of the same PRF or multiples thereof. The oscillators are set for the same frequency output. They will then be installed in the radar as the remote ranging oscillator, and the adjustment for synchronization will be made by ranging on another radar's transmitted pulse. Course adjustment is accomplished by shifting the PRF pulse to the correct 2000 yard interval, and the fractional offset is removed (fine adjust) by using the existing remote phase adjust.

The range reading, when the two radars are synchronized, should be equal to 1/2 the range between the radars and be the same at both radars. It should also be equal to 1/2 the surveyed distance between the radars, provided atmospheric refraction corrections have been made.

C O N C L U S I O N S

The varied analyses conducted in connection with this report on the atomic oscillators, rubidium and cesium beam, show that they can be adjusted in frequency until they are the same in frequency or that they cross in frequency. The test conducted on 19 March 1963 shows a frequency difference and variance of 8.4 parts times 10^{-12} for the two rubidium oscillators.. Similar results were noted in the analysis of the cesium beam oscillators.

The graphs contained in Appendix C show comparisons made of the various oscillators. Cross correlation of pairs of the oscillators show that the rubidium oscillators are less subject to short term variations than are the cesium beam oscillators. The results of the analysis of these oscillators demonstrate the accuracy and stability of the oscillators. Adjustments required are a form of vernier control capable of removing small frequency differences that may appear in long term analysis.

The results of the laboratory analysis, and other studies conducted on the atomic oscillators, show these oscillators to be excellent for use in the development of a precise synchronization scheme for radars.

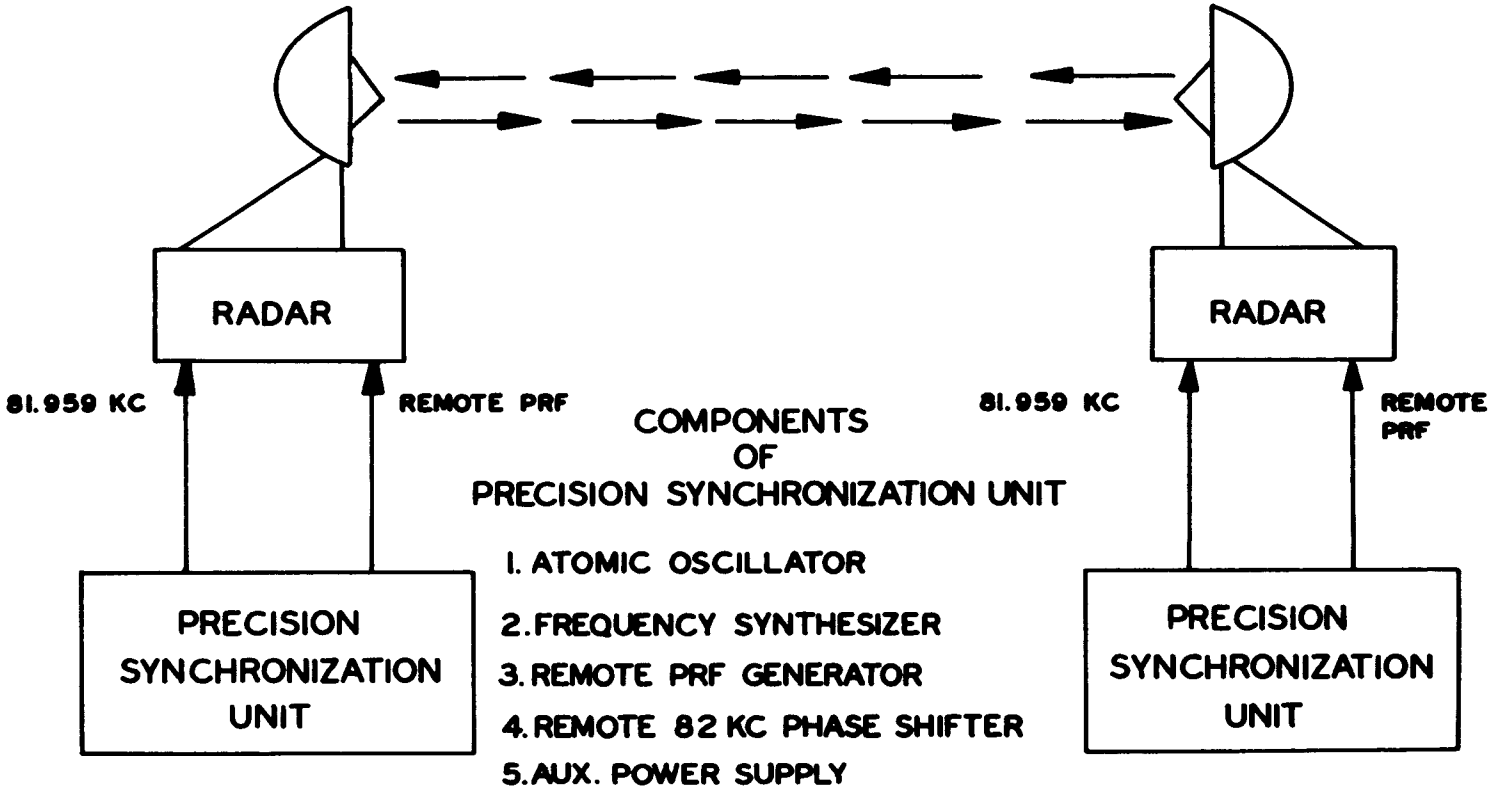

Figure 5 PRECISION SYNCHRONIZATION

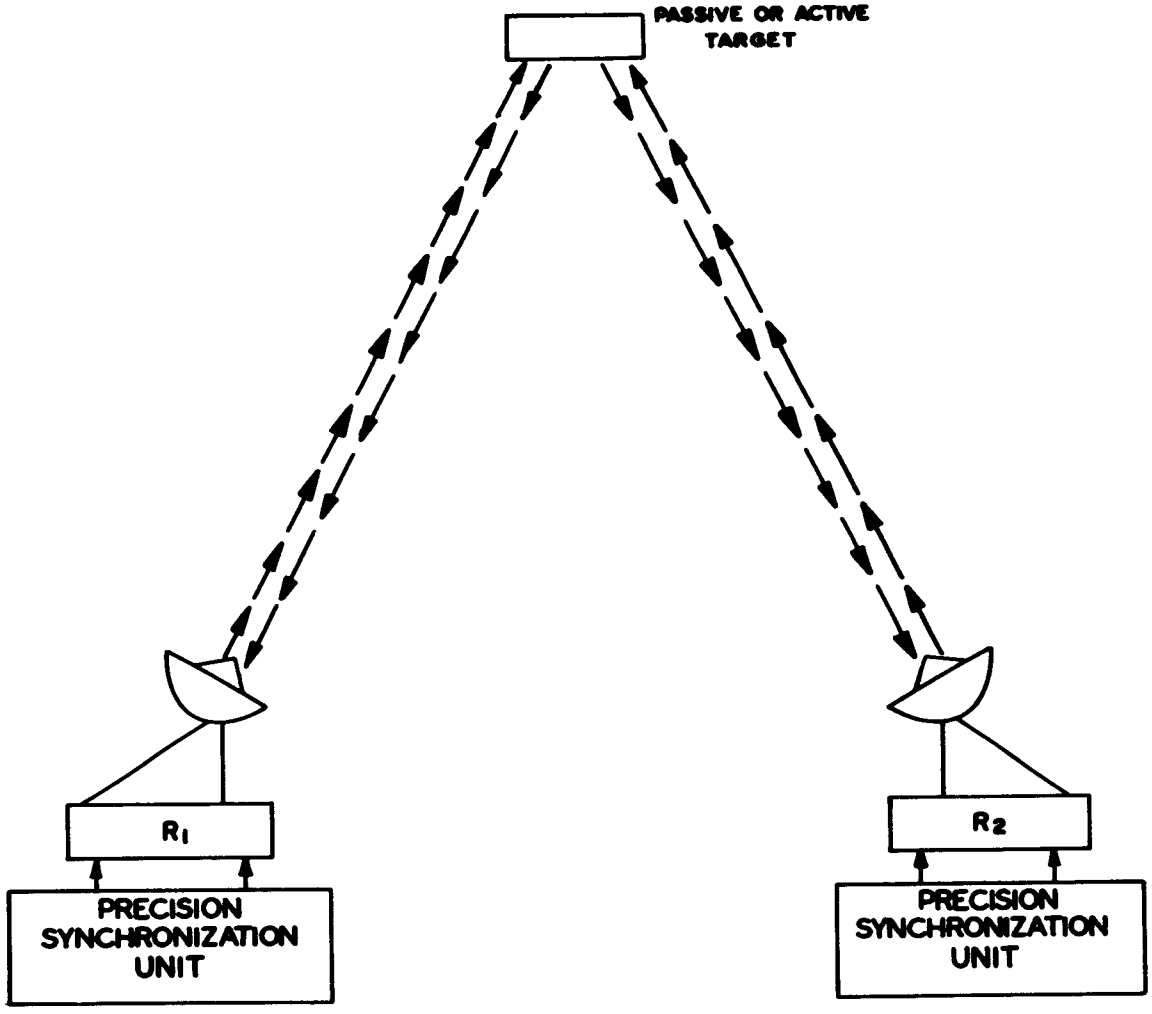

Figure 6 RADAR SYNCHRONIZATION USING AIRBORNE TARGET

The rubidium oscillators were determined to be best for use in such a development because of their better short term phase stability, higher reliability, lower cost, transportability, and the ease of use with varied power supplies (particularly battery supplies). The greatest previous disadvantage of the rubidium oscillators, variations in the gas cells controlling the frequency output, has been overcome by the contractor.

Field analysis, to be accomplished, will determine the time accuracy of the synchronization scheme. This analysis will also determine the maximum time between synchronization checks required for any specified accuracy and/or precision.

The means of synchronizing the radar ranging bases, by use of the radar microwave system and the PRF generator, is similar to using a very long integration time for synchronization. This provides an effective method of determining the time-position relationship of the transmitter pulses from the center of the axis of the antenna (the survey point of the radar). The normal radar calibration determines the time-position of a single pulse at the center of the radar axis by measuring the range to a known, precisely located target. The normal ranging and microwave circuit delays are then adjusted to set the radar range readings to the known range of the target.

These oscillators, when located at the radars, will also be able to be used as master oscillators for

a. Use with the digital range unit,

b. Radars using DIRAM systems,

c. Determining precisely the "nth" time around target position,

d. Providing stable pump frequency control for parametric amplifiers,

e. Complete, flexible, precise radar beacon coding,

f. Coherent transmitters,

g. Stabilizing radar digital shift pulses,

h. Pulse compression transmitters.

Additionally, the synchronization system will provide for a means of investigation of radar forward scatter, or the bi-static and multi-static

response characteristics of the radar target; multiple radar operations with one radar transmitter, using trilateration or triangulation procedures; and tracking without a radar transmitter when used with future synchronized beacons.

The system can be used to provide radar timing with a minimal additional cost and equipment. It would provide an excellent means of correlating timing with a radar located at a remote site where timing facilities are costly or not existant.

The high accuracy of atomic oscillators and their extremely long integration times allow with use of a WWV receiver, timing accuracies that approach those of the WWV transmitter, which is controlled by an atomic oscillator.

Since the atomic oscillators discussed herein are considered to be frequency standards by others, e.g. Dr. F. H. Reder, National Bureau of Standards, etc., it is possible to use them as a standard, for any system requiring a precise frequency.

BIBLIOGRAPHY

1. "American Institute of Physics Handbook, "Mcgraw Hill Book Co., N. Y., N. Y., 1957.

2. Chambers Encyclopaedia, J. B. Lippincott & Co., Philadelphia, Pa., 1868.

3. Dixon, H. W., "Study of Refraction Errors in Radar Propagation," Technical Report 18A, WSSCA, WSMR, N.M., 25 April 1956.

4. Dixon, H. W., "Microwave Refractive Index Profiles for the Atmosphere Over White Sands Proving Ground from Radio-Sonde Data," Technical Report 18D, WSSCA, WSMR, N.M., 1 October 1956.

5. Dixon, H. W., "A First Order Approximation Correction of Radar Elevation Angles for Troposheric Refraction," Technical Report 18E, WSSCA, WSMR, N.M., 15 January 1957.

6. Doherty, R. H. and Others, "Timing Potentials of LORAN-C," Memorandum Report, National Bureau of Standards PM-85-40, U.S. Dept. of Commerce, Boulder Laboratories, Boulder, Colorado, 1 June 1960.

7. IRIG, "IRIG System Standards for C-Band (SCM) Instrumentation Radars and Beacons," Recommendation Number 106-59, IRIG, May 1960.

8. Keys, D. D., "Chain Synchronization System," Technical Memorandum Nr. 1011, WSSCA, WSMR, N.M., undated.

9. Nylund, H. W., Byorick, R. S., and Others, "Plan for Future Range Instrumentation Communications Facilities at White Sands Proving Ground," Dept. 3223, Bell Telephone Laboratories, June 1956.

10. Pietrasanta, A., "Analysis of Radar Errors - Index of Refraction Study," Technical Report Nr. 4, WSSCA, WSMR, N.M., 12 February 1954.

11. Reder, F. H., "Atomic Clocks and their Application," USARDL Technical Report 2230, U.S. Army Research & Development Laboratories, Fort Monmouth, New Jersey, October 1961.

12. Reder, F. H., "Principle of Clock Synchronization and Review of Various High Synchronization Systems," Paper Nr. 9, Atomic Frequency Symposium, presented at WSMR, N.M., 2 November 1961.

13. Reder, F. H., Brown, P., Winkler, G., and Bichart, C., "Final Results of a World Wide Clock Sysnchronization Experiment (Project WOSAC)", USARDL, Ft. Monmouth, N. J., Proceedings of the 15th Annual Symposium on Frequency Control, 1959.

14. Reder, F. H., "Application of Atomic Frequency Standards," Paper Nr. 10, Atomic Frequency Symposium, presented at WSMR, N.M., 2 November 1961.

15. Reder, F. H., "Atomic Frequency Standards," Electronics Magazine, Vol. 35, Nr. 47, McGraw Hill Publishing Co., Albany, N.Y., 23 November 1962.

16. "Science and Technology Encyclopedia," McGraw Hill Publishing Co., N. Y., N. Y., 1962.

17. Searles, C. E., and Brown, P., "Evaluation of Atomic Frequency Standards," USARDL Technical Report 2298, U.S. Army Research & Development Laboratories, Fort Monmouth, New Jersey, May 1962.

18. "Velocity Measurements by Radar Means," Interim Report, Radio Corporation of America, Moorestown, N. J., 31 May 1959.

19. Winkler, G. M. R., "High-Precision Frequency and Time Interval Measurement Techniques," Paper Nr. 11, Atomic Frequency Symposium, presented at WSMR, N.M., 2 November 1961.

ACKNOWLEDGMENTS

Special acknowledgment is due Mr. E. G. Barrett, Mr. A. R. Salguero, Mr. H. L. Bonner and SP4 E. Surprenant of the Ground Radar Branch, Radar Systems Division for development of the prototype synthesizer and laboratory analysis of the oscillators discussed, and to the members of the Instrumentation Department's Reports Group, particularly Mr. J. L. Bryce for his assistance in preparing and analyzing the illustrations and M/Sgt L. A. Fatzinger for the assistance in the writing and editing done in the preparation of this report.

APPENDIX A

VELOCITY OF LIGHT IN FREE SPACE

The measurement of the velocity of light dates back in history. The speed of light was calculated as 195,000 English miles per second as early as 1868. This figure (195,000 miles/sec) was arrived at by observations of the eclypes of the satellites about the planet Jupiter.[1]

Various methods have been used since Cornu experimented with a toothed wheel and arrived at a figure of 299,990 ±200 kilometers/second in 1876. Others using rotating mirrors, toothed wheels, Kerr cells, electronic choppers, microwave cavities, interferometers, and molecular spectra reduced this figure to 299,792 ±6 kilometers/second by 1954.[2]

The latest published figures known to the author are those arrived at by Bearder and Thomsen in 1955. The speed of light by their calculations, as published in the "Science and Technology Encyclopedia of 1962, and the Handbook of Chemistry and Physics for 1962 is 299,792.8 ±.4 kilometers/second or 327,857.064 ±437 yards/second.

1. Chambers Encyclopaedia, J. B. Lippincott & Co., Philadelphia, Pa., 1868, provides the earliest reference found by the author quoting a figure for the velocity of light.
2. American Institute of Physics Handbook, McGraw-Hill Book Co., N. Y., N. Y., 1957

APPENDIX B
TIME SCALES

GENERAL

There are four main time scales now in use. They are

(1) Universal Time (UT2),

(2) Ephemeris Time (ET),

(3) Atomic Time (A1), and

(4) Atomichron Time (ATOT).[1]

By definition, 1 second ATOT equals

1 second ET + 7.6 nanoseconds,

1 second A1 + 7.6 nanoseconds

1 second $UT2_{1962}$ - 5.5 nanoseconds.

Universal Time (UT2) is based on rotation of the earth around its axis and is corrected for polar motion and known periodic variations in the speed of rotation of the earth. The corrective factor to convert to other times will normally change from year to year.

Ephemeris Time (ET) is based on the orbital motion of the earth around the sun. It is uniform by definition but has not been measured astronomically to the same precision as Universal Time.

Atomic Time (A1) is based on the zero field hyperfine transitions of cesium 133 atoms. It is assumed to be the same as Ephemeris Time.

Atomichron Time (ATOT) is not presently an official time scale but it is based on a second defined as the time it takes cesium 133 atoms to complete 9,192,631,840 Hertz units of electromagnetic vibration in a zero magnetic DC field.

---

1. Reder, F. H., "Atomic Clocks and Their Applications," USARDL Tech Report 2230, U. S. Army Research and Development Laboratory, Ft. Monmouth, N. J., October 1961.

EFFECT OF RADAR SYNCHRONIZATION USING DIFFERENT TIME SCALES

When measuring a radar range in relation to one of the time scales, the uncertainty of the velocity of light is several orders of magnitude higher than the difference in frequencies if the oscillators were referenced to different time scales.

The use of different time scales becomes significant in a synchronization system, for if one oscillator was calibrated to one time scale and a second oscillator calibrated to a different time scale, the time bases would drift apart at a fixed rate. This appears as a frequency offset and causes a shift in the time bases at the rate of the offset, if one unit was calibrated on UT2 time and the other unit calibrated on A1 time the time base would shift 27.18 microseconds per hour or 4454.8 yards/hr. or 74.24 yds/min. or 1.236 yds/second. Therefore, the various oscillators must be calibrated to each other regardless of the referenced time frequency scale.

APPENDIX C

LABORATORY ANALYSIS OF OSCILLATORS

GENERAL

The laboratory analysis of the various crystal and atomic oscillators was made to determine the individual characteristics of these oscillators. This analysis was used to determine which of the oscillators could be used to the greatest advantage in synchronizing the radars at White Sands Missile Range. The oscillators chosen, will be used as remote ranging oscillators and for determination of the PRF of all radars which are to be synchronized.

The cesium beam oscillators are primary standard oscillators. The rubidium oscillators are secondary standards which require calibration and recalibration only when components in the frequency resonator are changed.

PROCEDURE

The analysis demonstrates the individual characteristics of the oscillators and provides a comparison of the various oscillators. The equipment was set up as shown in Figure C1. Test results or conclusions are covered under individual tests. Peak variations are given and show larger variations than RMS or sigma variations. This indicates maximum synchronization errors that can be expected when using these oscillators.

Little was done to determine the absolute accuracy of the oscillators, rather the analysis was limited to determination of relative accuracy (specifically short term) between the oscillators. C. E. Searles and P. Brown have evaluated atomic type oscillators and reported on absolute accuracies in their report "Evaluation of Atomic Frequency Standards."[1]

INDIVIDUAL TEST RESULTS

Frequency Multiplier Analysis (Figure C2)

The short term analysis of the various oscillators uses a 5 Mc output

1. Searles C. E. and Brown, P., "Evaluation of Atomic Frequency Standards," USARDL Technical Report 2298, U. S. Army Research & Development Laboratory, Ft. Monmouth, N. J., May 1962.

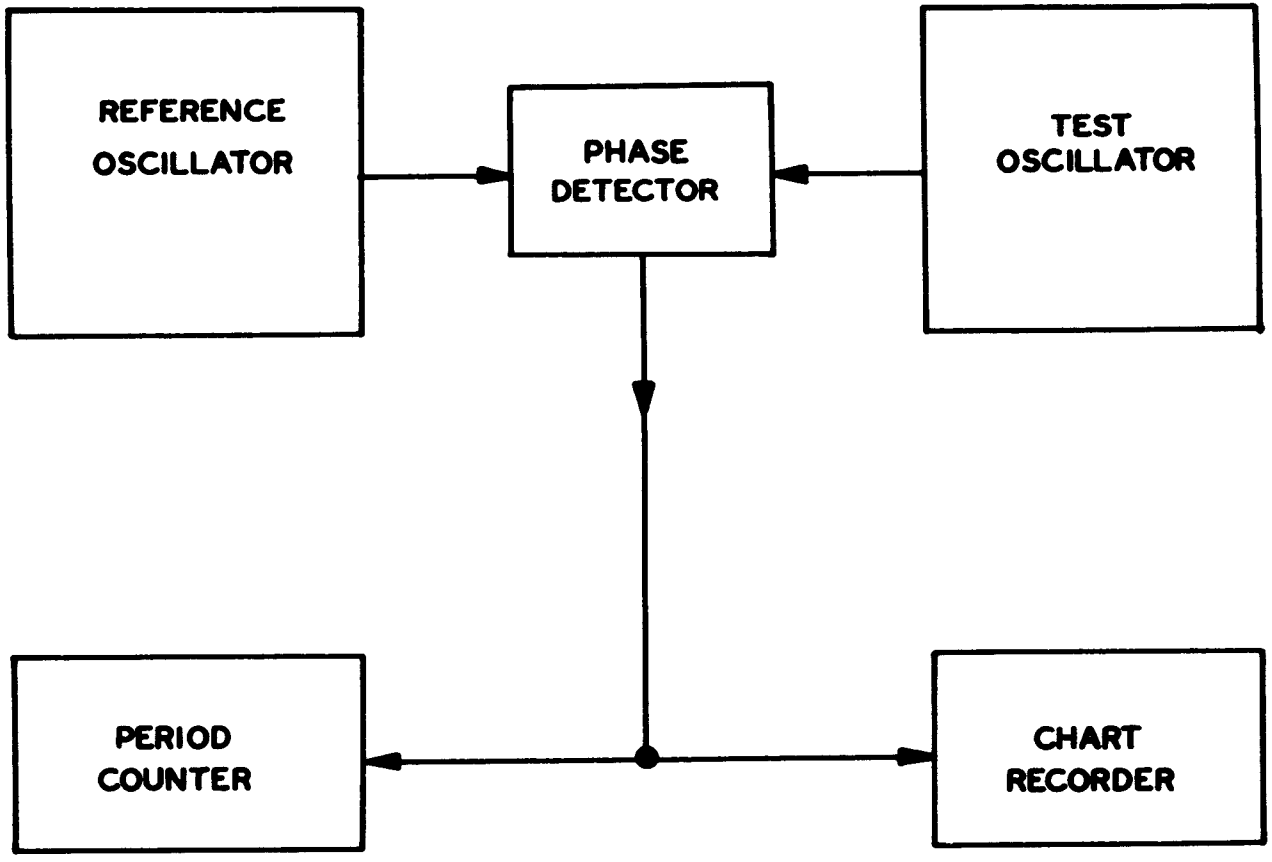

Figure C1 NORMAL BENCH TEST SET-UP

multiplied to 100 Mc and 500 Mc to show short term variations. To determine the amount of variation, and noise introduced by the frequency multipliers, the two frequency multipliers were driven from a common 5 Mc output of the rubidium oscillator. The figure shows that variations and noise caused by the frequency multipliers can be ignored for purposes of the succeeding tests.

Crystal Oscillator Analysis (Figure C3)

This comparison of the crystal oscillator vs. the rubidium oscillator shows that the crystal oscillator varied over the test period of 1 and 3/4 hours. Prior to T_0 the crystal oscillator was zeroed to the rubidium oscillator. The elapsed time between T_0 and T_4 was 800 seconds. The frequency difference at T_4 was one part times 10^{-10}. The elapsed time between T_0 and T_{30} was 6,000 seconds. The frequency difference at T_{30} was 10 parts times 10^{-10}. The crystal oscillator had been operating continuously for three months prior to this analysis.

Rubidium Oscillator Analysis

Comparison of the two rubidium oscillators (SN 124 and SN 128), run on 19 March 1963, shows approximately nine cycles variation at 100 Mc during a three hour period. This is an average frequency difference of 8.4 parts times 10^{-12}. During this test the peak frequency variation was approximately one part times 10^{-11} (Figure C4). Figures C5, C6 and C7 show several recordings made during the analysis of the rubidium oscillators.

Figure C5. This analysis was conducted on 20 February 1963 and shows three twenty minute segments in an eight hour run. During the recording period a frequency difference of 2.22 parts times 10^{-11} varying to 5.78 parts times 10^{-11} exists. This shows a frequency variation of 3.56 parts times 10^{-11}.

Figure C6. Analysis was conducted on 28 February 1963 and shows a frequency difference of 4.35 parts times 10^{-11}, with a frequency variation of .54 parts times 10^{-11}.

Figure C7. Analysis was conducted on 4 March 1963 and shows a frequency difference of 5.5 parts times 10^{-11} to 3.25 parts times 10^{-11}. The frequency variation was 2.20 parts times 10^{-11}.

The frequency difference during these tests could easily have been reduced by adjustments of the oscillators, but was maintained to show the

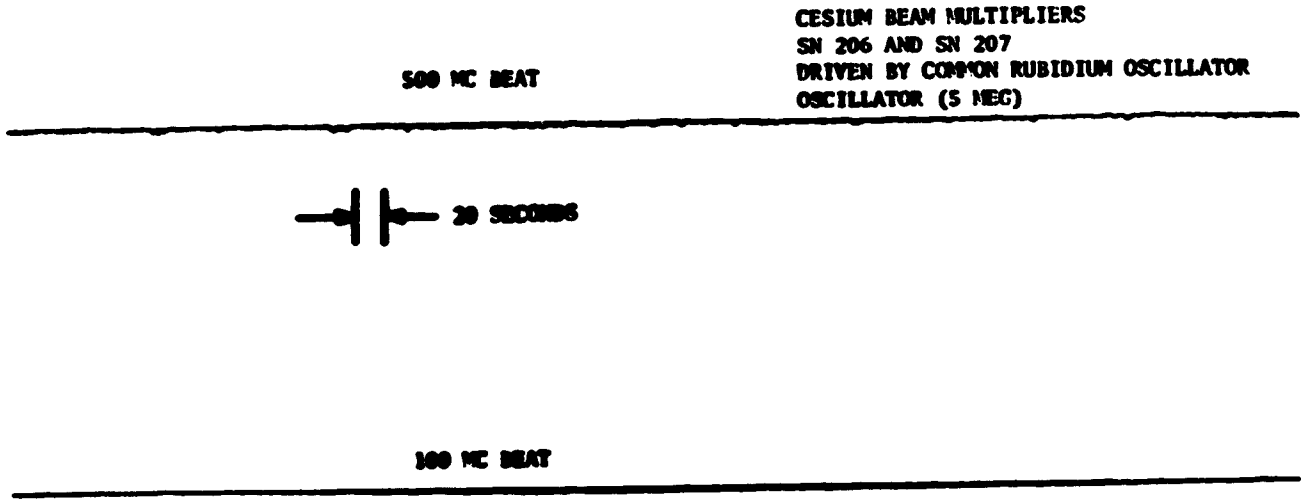

Figure C2 FREQUENCY MULTIPLIER ANALYSIS

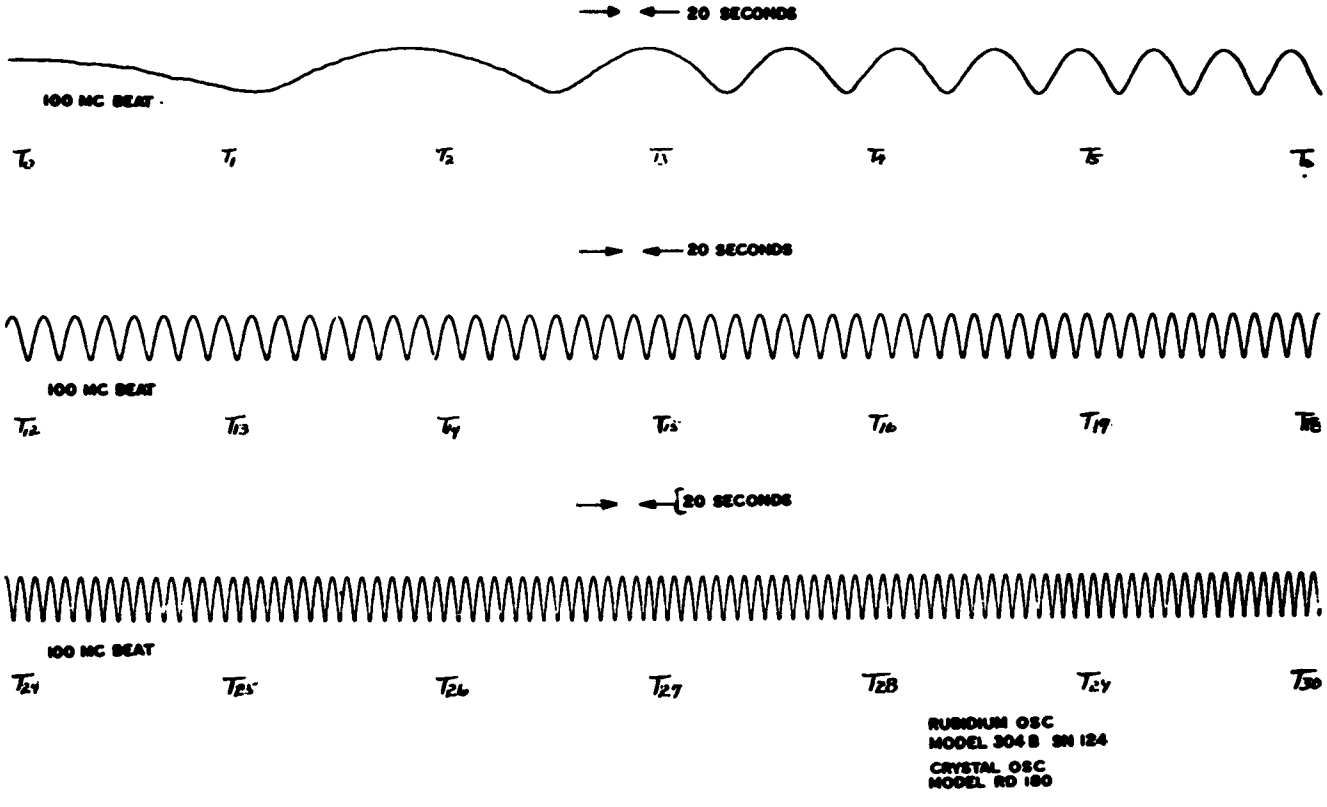

Figure C3 **CRYSTAL OSCILLATOR ANALYSIS**

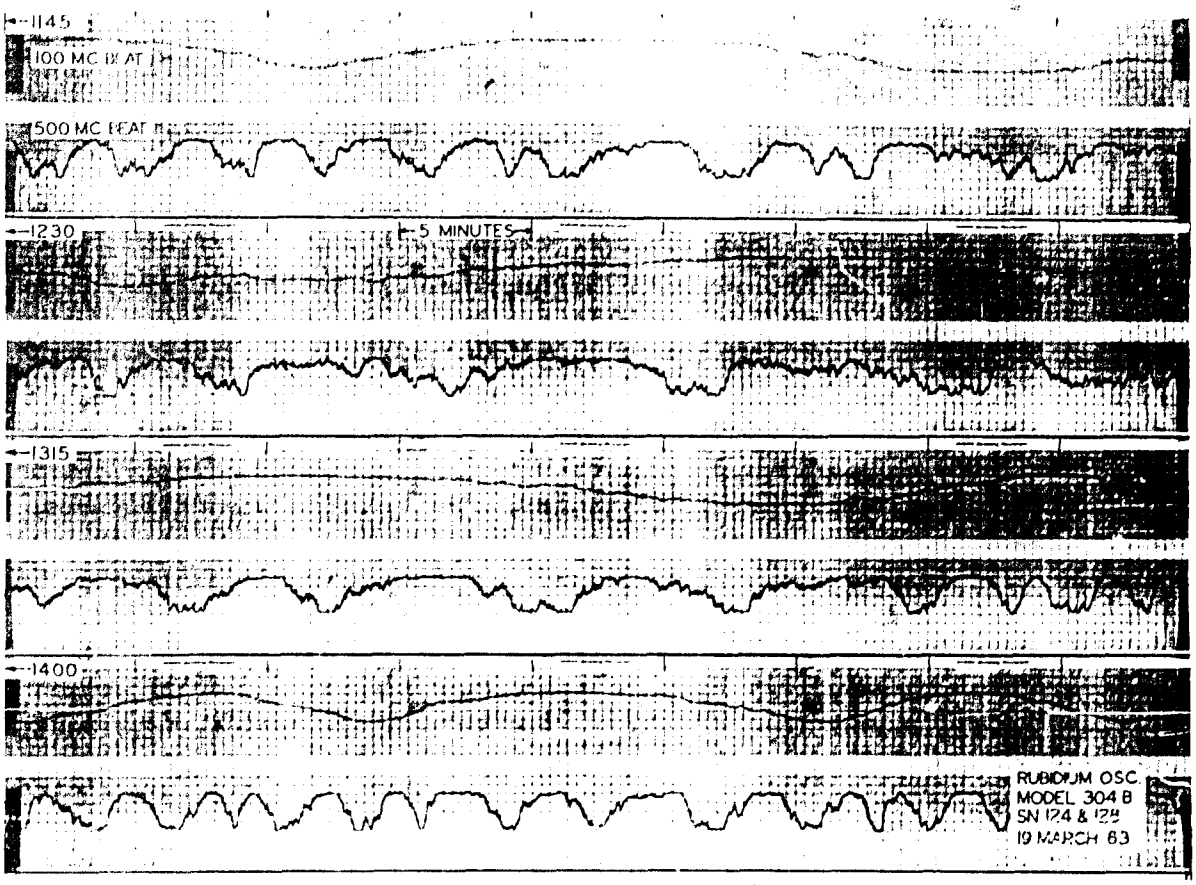

Figure C4 RUBIDIUM OSCILLATOR ANALYSIS, 19 MAR 63

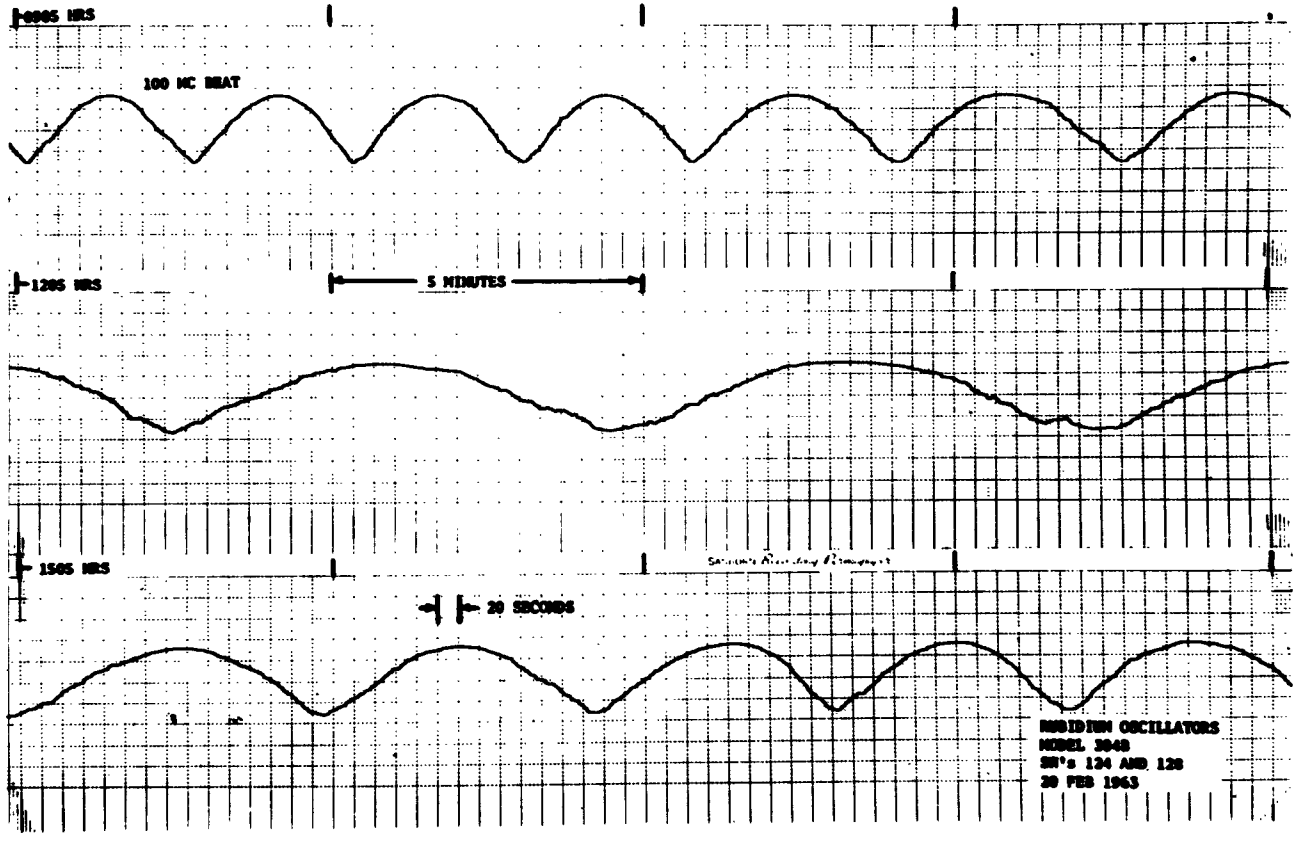

Figure C5 **RUBIDIUM OSCILLATOR ANALYSIS, 20 FEB 63**

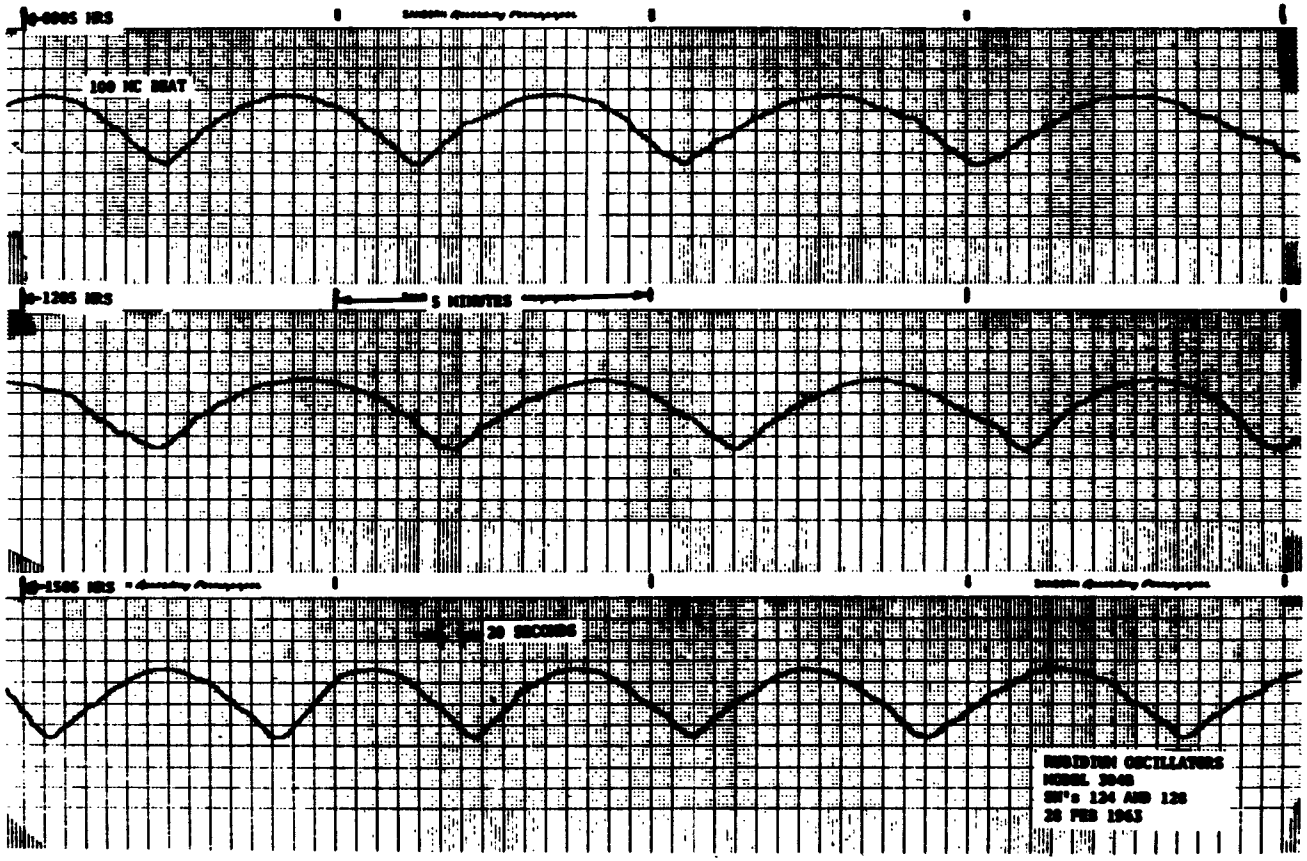

Figure C6 **RUBIDIUM OSCILLATOR ANALYSIS, 28 FEB 63**

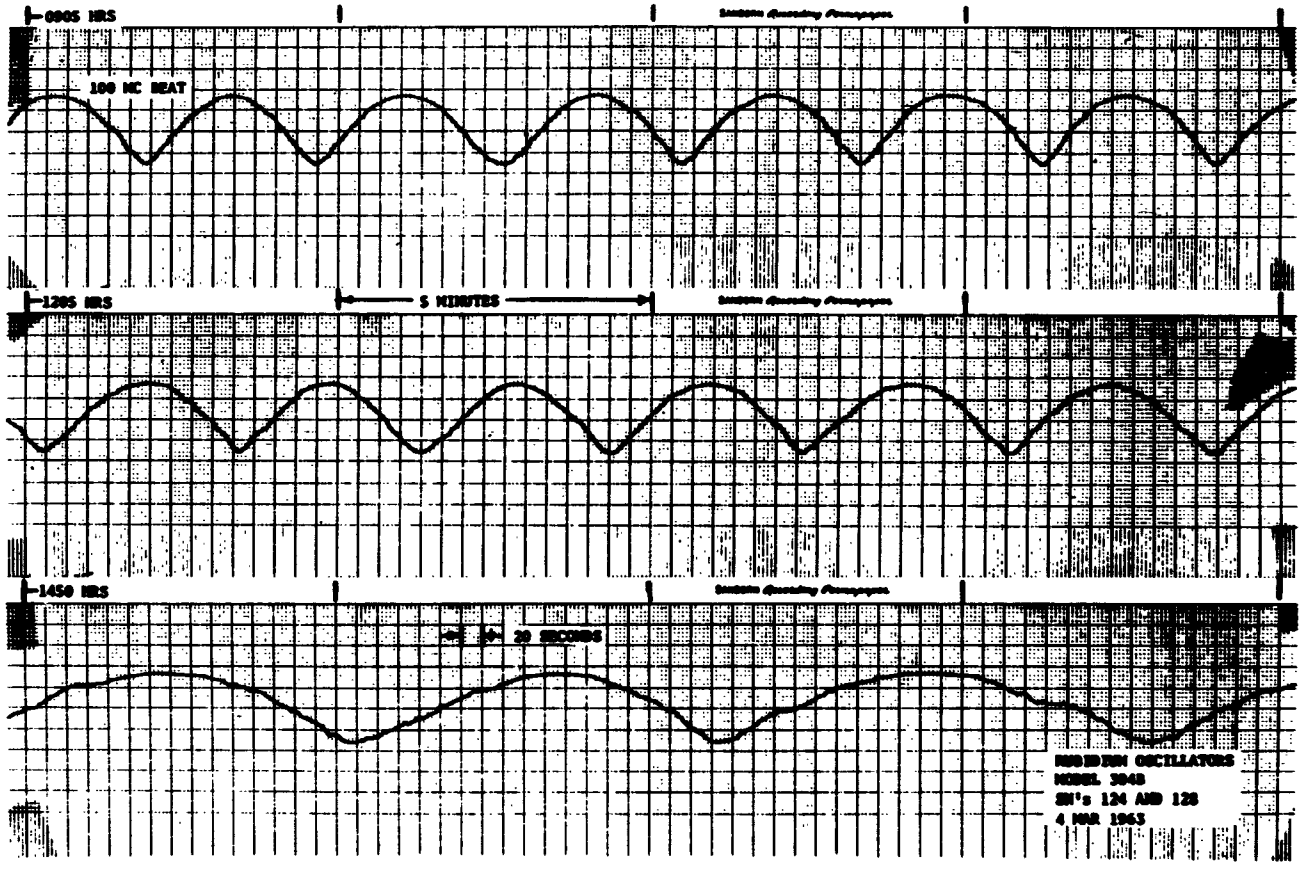

Figure C7 RUBIDIUM OSCILLATOR ANALYSIS, 4 MAR 63

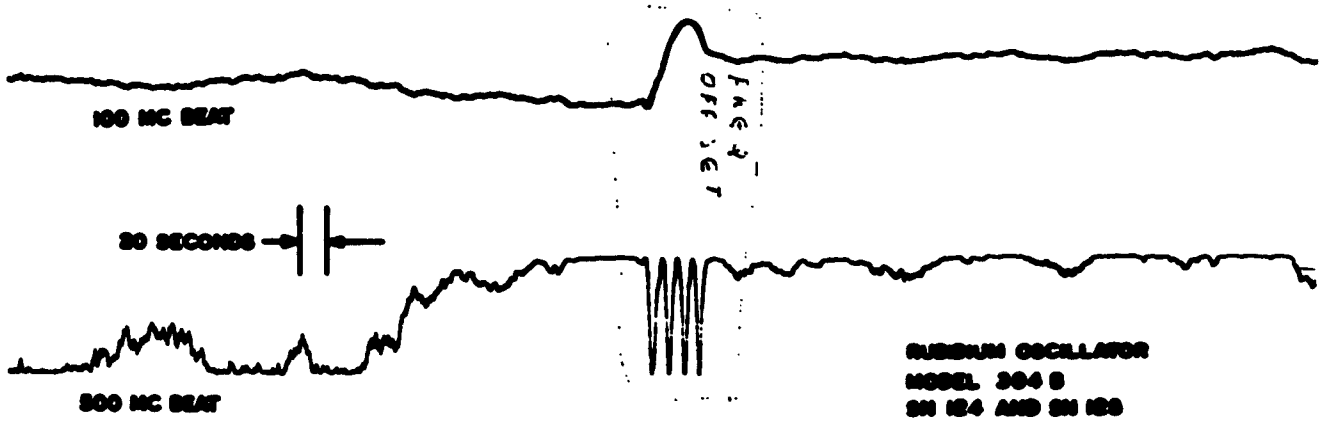

Figure C8 RUBIDIUM OSCILLATOR FREQUENCY ADJUSTMENT

difference between frequency variation and a very slight frequency difference. To demonstrate the ease and precision of the adjustment of rubidium oscillators, the frequency was changed four cycles on one oscillator at 500 Mc and returned to the original frequency (Figure C8). This is equivalent to a phase shift at 100 Mc of 288 degrees or a time shift of 8 nanoseconds.

Cesium Beam Oscillator Analysis

Comparison of the cesium beam oscillators (SN S206 and SN S207) was made by means of the following tests.

The test run on 17 September 1962 (Figure C9) shows the frequency difference between these oscillators, which was 13 cycles in 1200 seconds. This is a frequency difference of 1.08 parts times 10^{-10} with a cycle to cycle variation of .33 parts time 10^{-10}. Further comparisons are shown in Table I.

The tests run 20 August 1962 and 17 September 1962 (Figures C10 and C11) show the direct comparison of the 5 Mc outputs of the cesium beam oscillators. Figure C10 shows slightly different results than does Figure C11 over the same length of time. The frequency difference is 1.05 parts times 10^{-10} with a frequency stability of 1 part times 10^{-11}. The first period shown on Figure C11 is 1800 seconds, the second period is 1500 seconds, with a difference of 300 seconds between these periods. This shows instability or phase difference between the oscillators of 2.2 parts times 10^{-11}. The frequency difference is 1.35 parts times 10^{-10}, approximately the same as shown previously.

Figures C12, C13, and C14 show the direct comparison of the 100 Mc outputs at different C-Field current adjustments. Figures C12 and C13 show the comparison of the C-Fields of S206 at 450 Ma and S207 at 180 Ma. There is a frequency difference of approximately 1.6 parts times 10^{-11}. Figure C14 shows the comparison of the C-Fields of S206 at 500 Ma and S207 at 180 Ma. They have crossed in frequency and there is a frequency difference of approximately 1.25 parts times 10^{-11}. These figures show the difficulty of determining frequency difference and variation when the units are very close in frequency.

The cesium beam oscillators can operate on two frequency nulls in addition to the center null. These are about 2.22 to 2.36 parts in 10^8 difference in frequency from the center null. The high and low nulls are different in frequency by approximately the same amount. This provides an ideal method to determine the frequency difference and

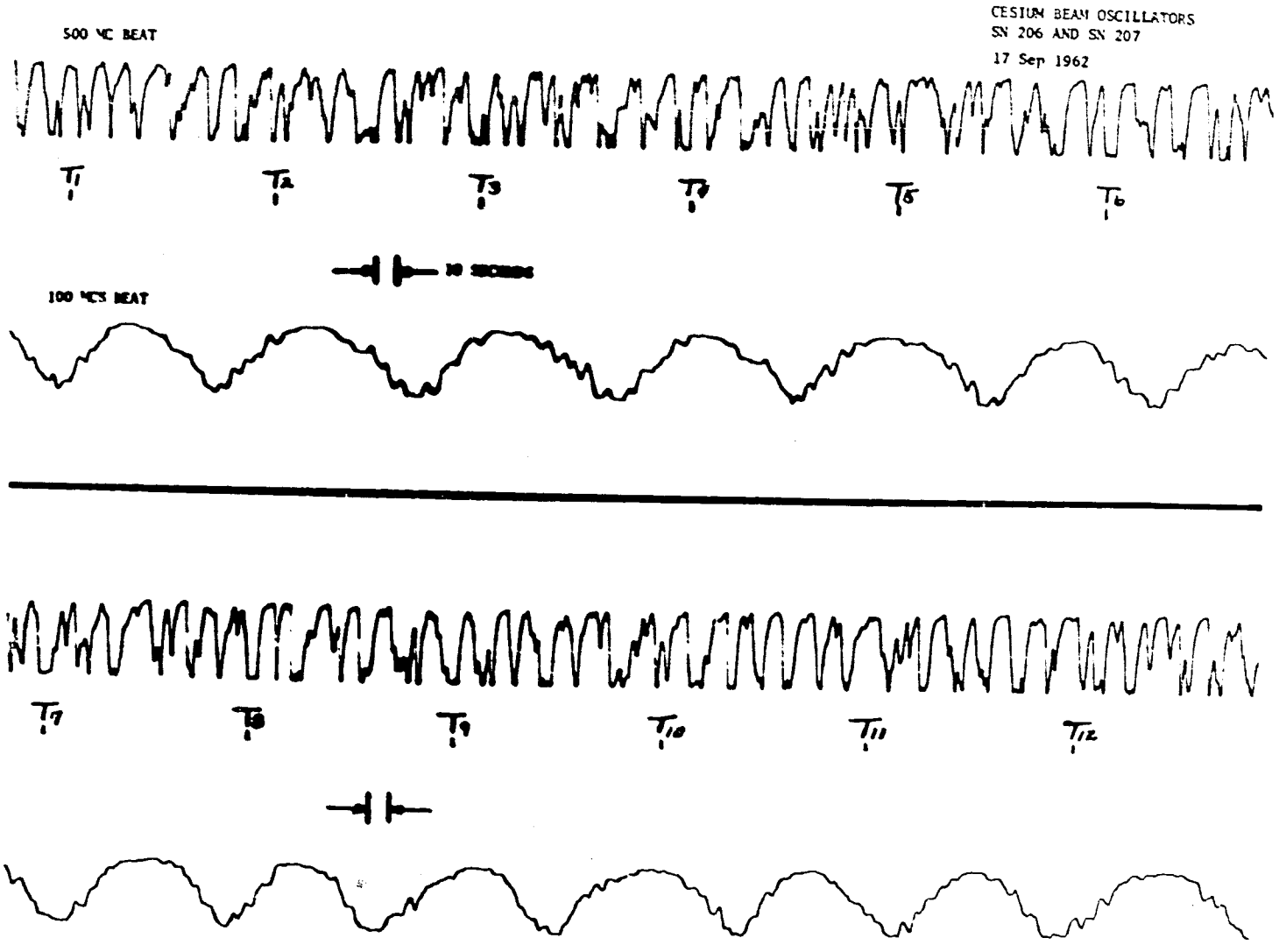

Figure C9 CESIUM BEAM OSCILLATOR ANALYSIS, 17 SEP 62

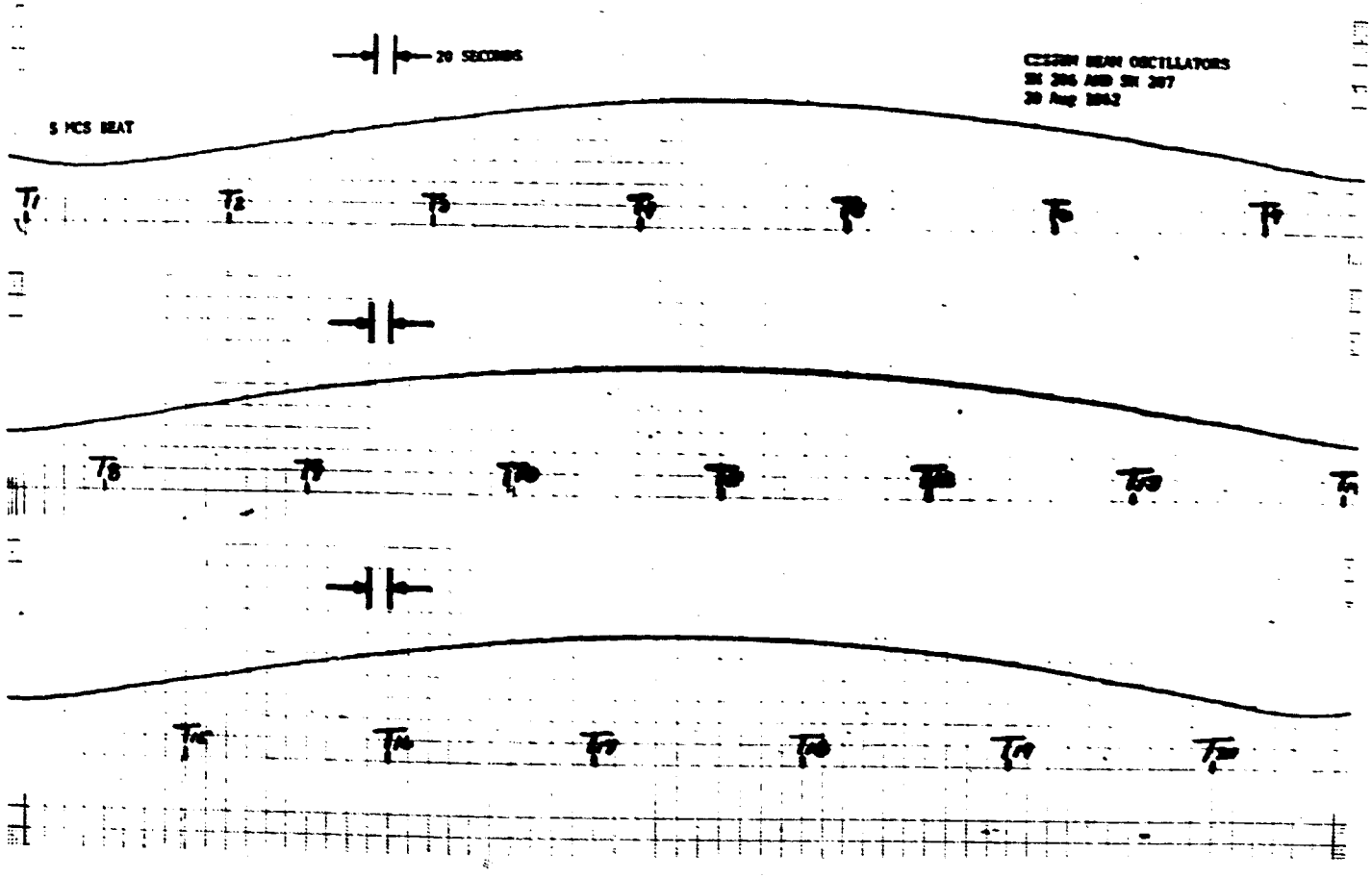

Figure C10 CESIUM BEAM OSCILLATOR ANALYSIS, 20 AUG 62

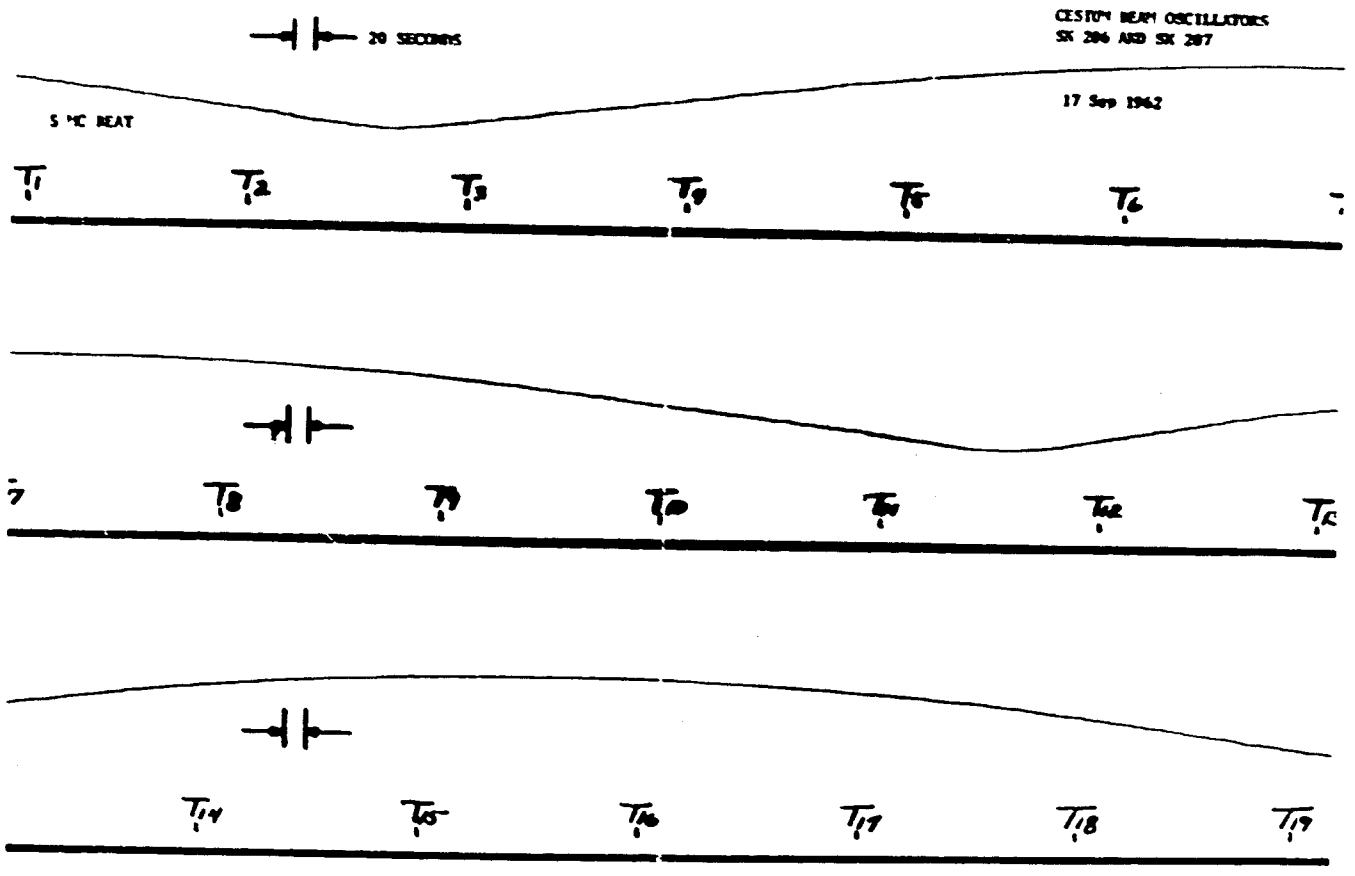

Figure C11 CESIUM BEAM OSCILLATOR ANALYSIS, 17 SEP 62

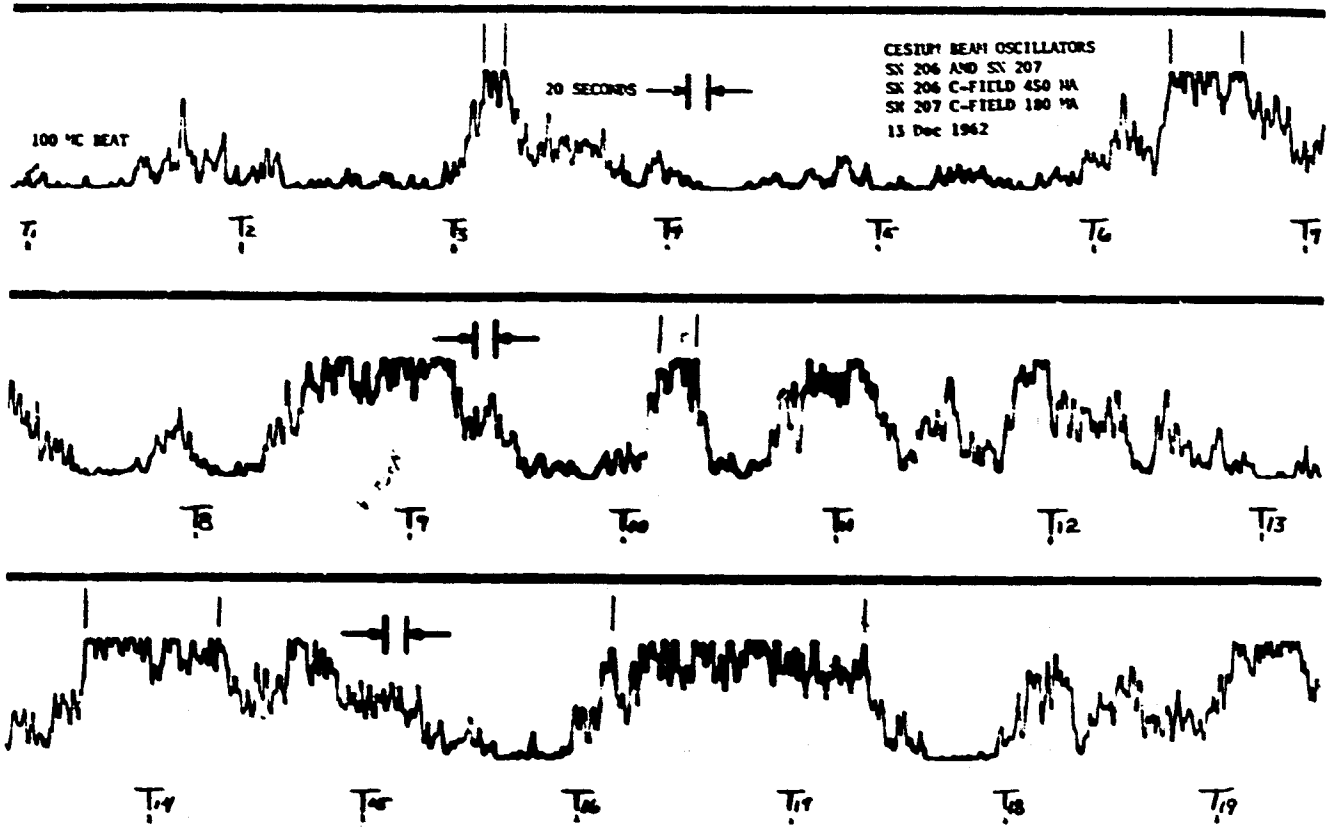

Figure C12 CESIUM BEAM OSCILLATOR ANALYSIS, 13 DEC 62

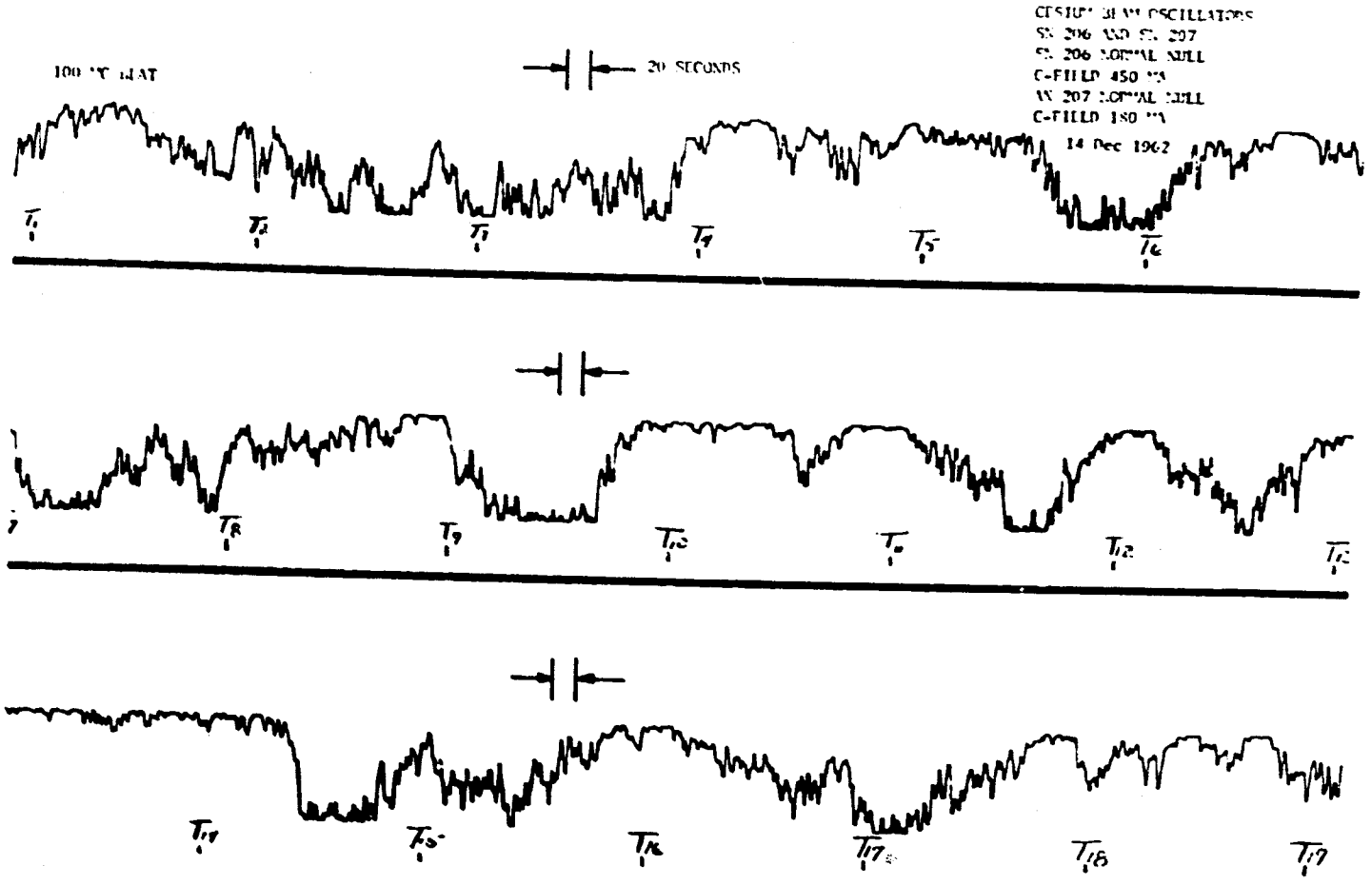

Figure C13 CESIUM BEAM OSCILLATOR ANALYSIS, 14 DEC 62

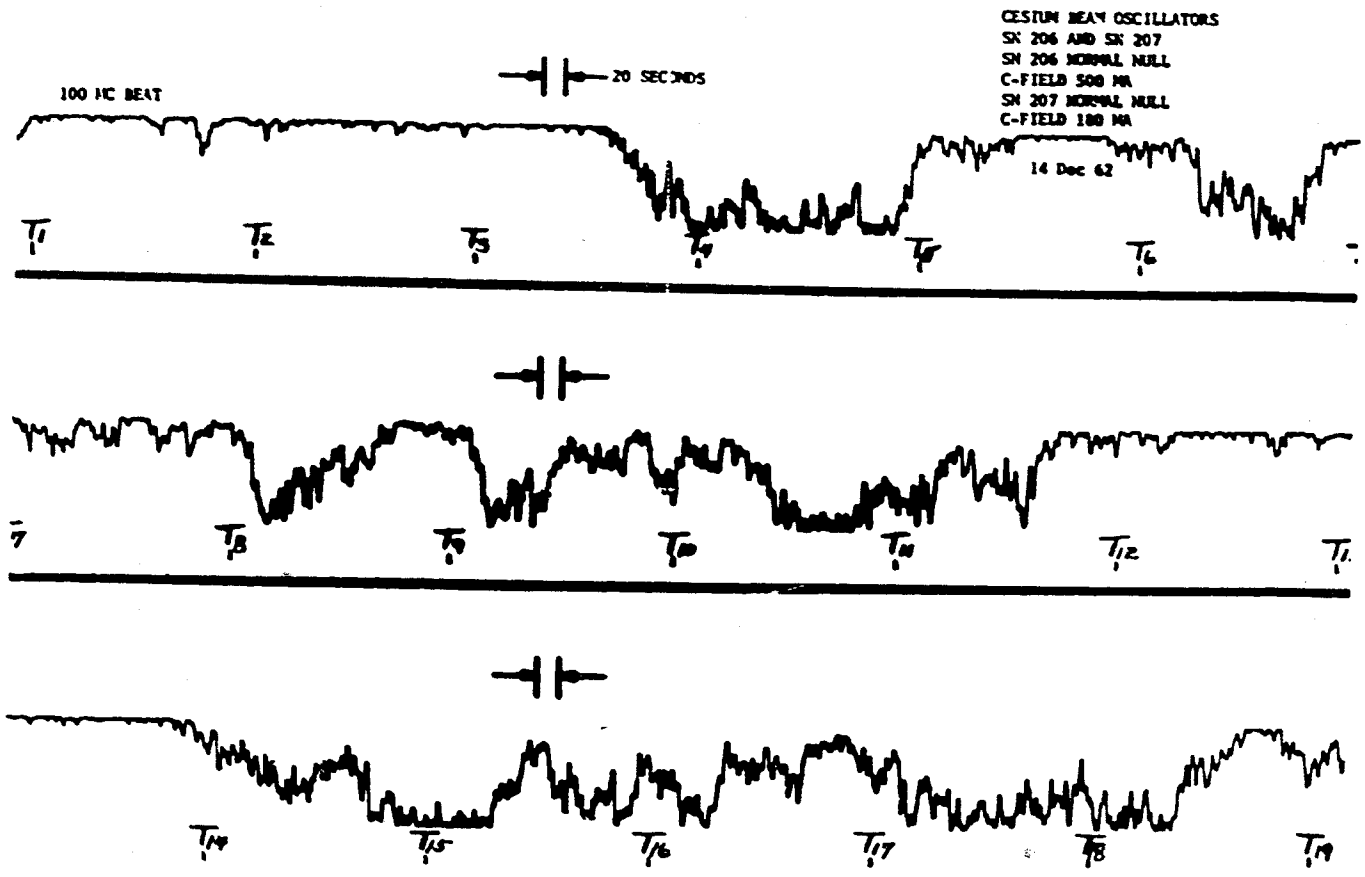

Figure C14 CESIUM BEAM OSCILLATOR ANALYSIS, 14 DEC 62

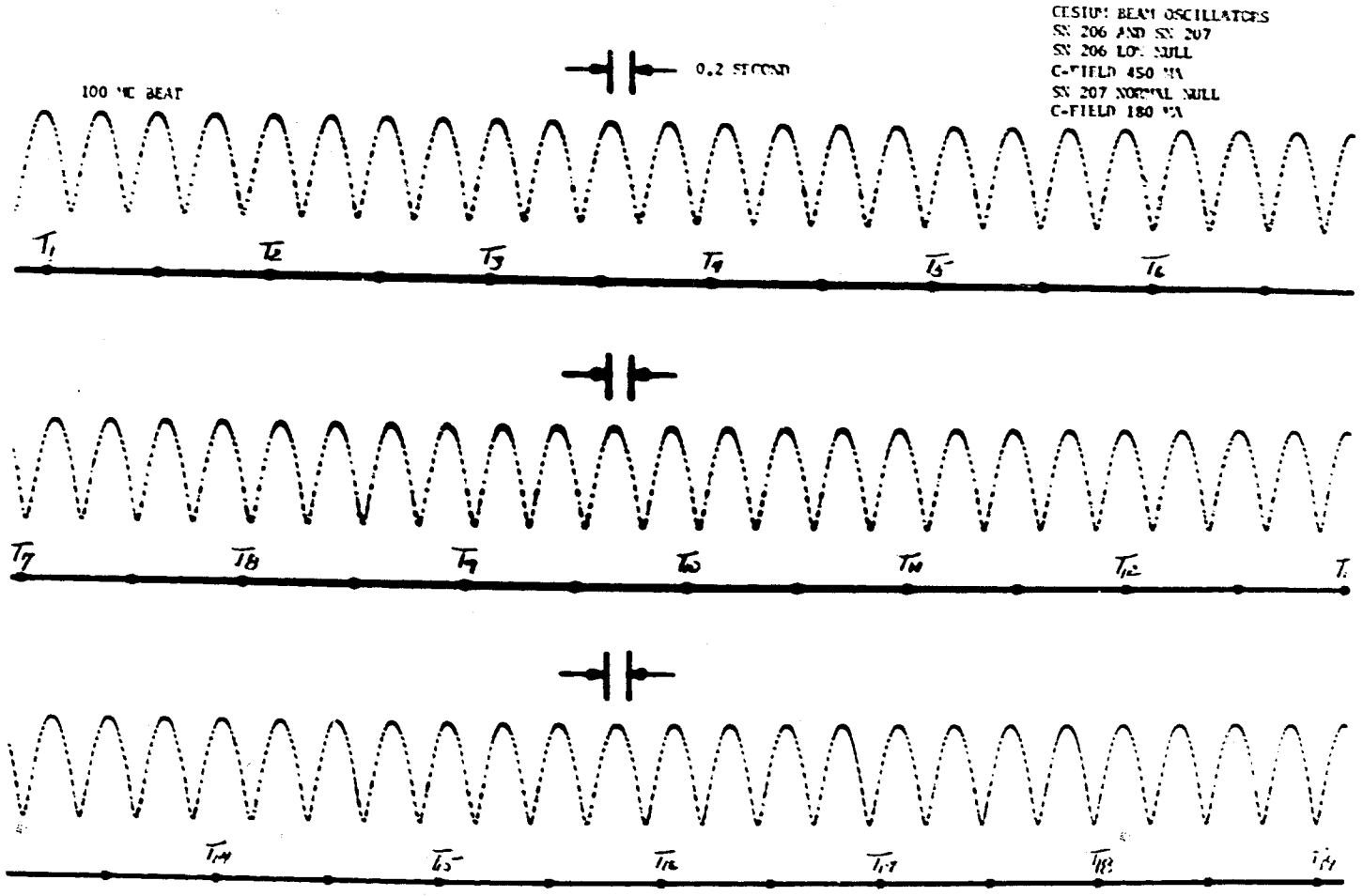

Figure C15 NULL COMPARISON A, CESIUM BEAM OSCILLATORS

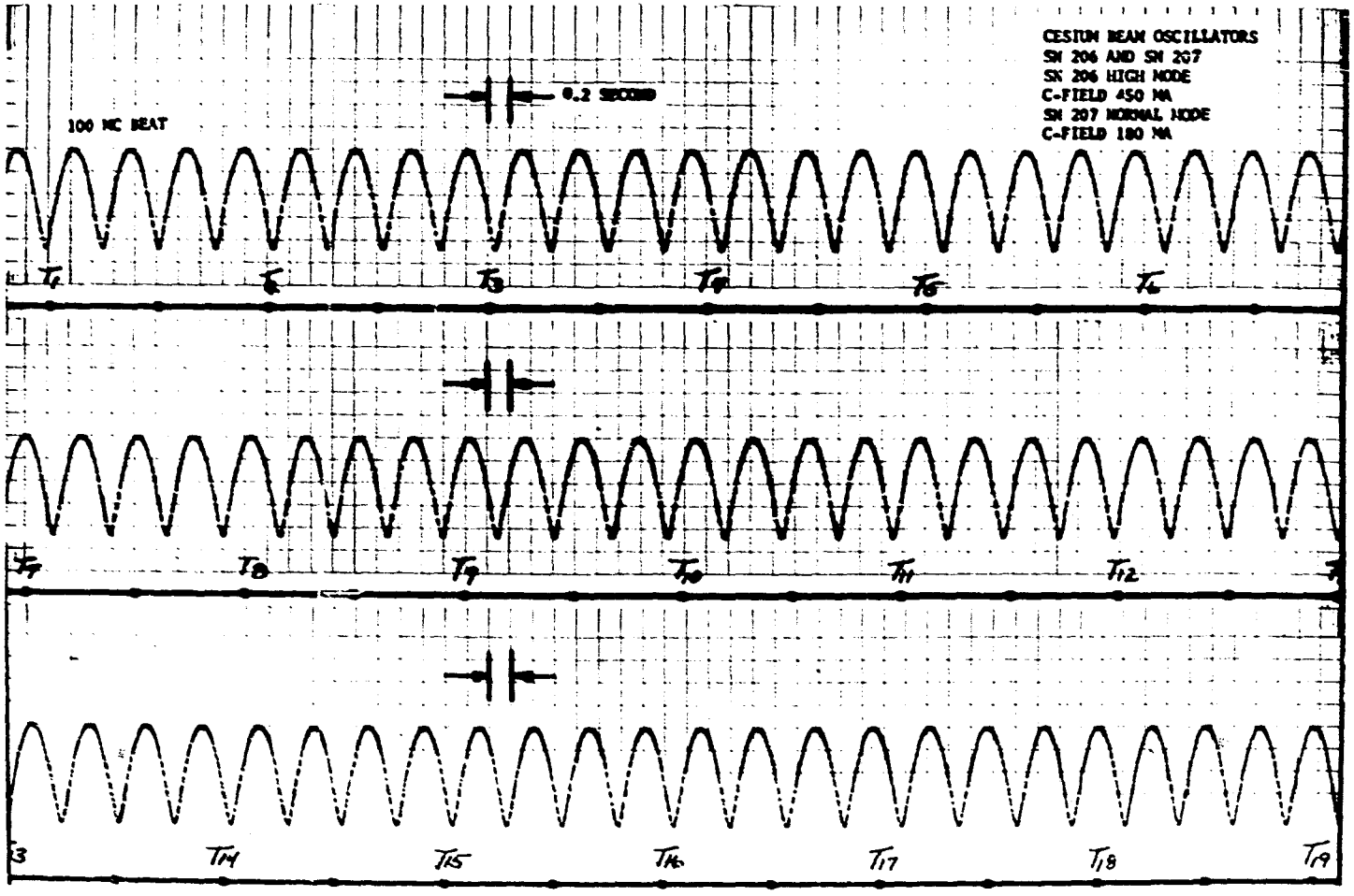

Figure C16 NULL COMPARISON B, CESIUM BEAM OSCILLATORS

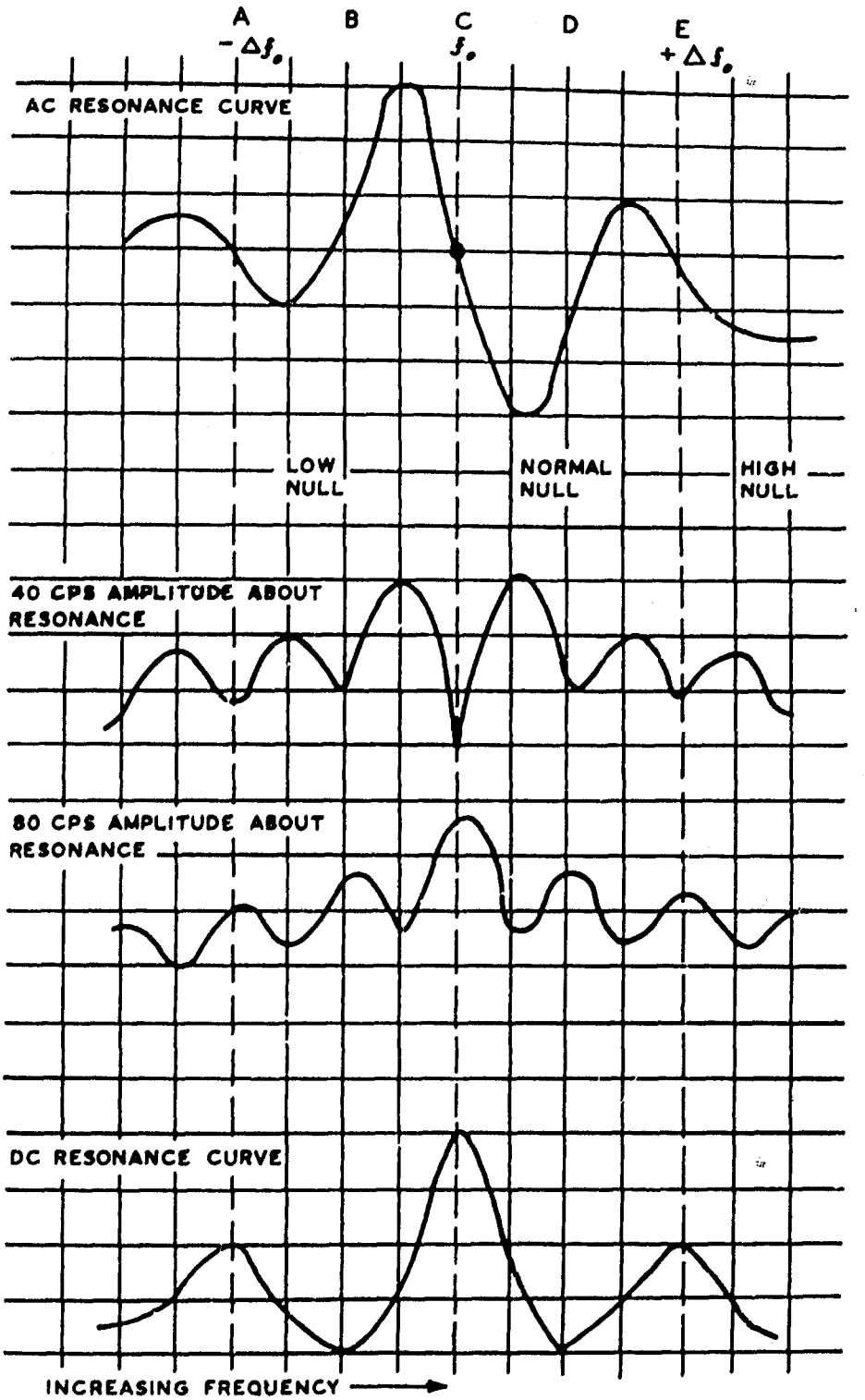

Figure C17 BEAM TUBE RESPONSE CURVE

variations or phase shift rapidly (Figures C15 and C16). Figure C17 shows the beam tube characteristics which allows for three null operation. The conditions along the C axis are the normal conditions for operation. Comparisons along the A and E axes show the conditions to be relatively the same but at lower amplitude. The AFC servo will control from any of the three axes.

Rubidium Oscillator vs. Cesium Beam Oscillator (Figure C18)

This figure shows the comparison of the two cesium beam oscillators and rubidium oscillator SN 124 vs. the cesium beam oscillator SN 207. This analysis was conducted without any adjustment being made to the rubidium unit after delivery from the manufacturer. The rubidium oscillator was 7.5 parts times 10^{-10} different in frequency from the cesium beam oscillator. The two cesium beam oscillators are different in frequency by 8.4 parts times 10^{-11} at the time this comparison was made.

Calibration Curves

Figures C19 through C22 are the calibration curves for the varied atomic oscillators used in the laboratory analysis.

Comparison of the Atomic Oscillators Analyzed

The atomic oscillators were adjusted to approximately the same frequency. Figures C23 through C26 show the frequency difference during the analysis.

Figure C23 is a comparison made between the rubidium oscillator (SN 128) and the cesium beam oscillator (SN S206) at 100 Mc. There is about three cycles difference in frequency in 1620 seconds. This is a frequency difference of 1.85 parts times 10^{-11}.

Figure C24 is a comparison made between the cesium beam oscillators (SN S206 and SN S207) at 100 Mc. There is about two cycles difference in frequency in 1600 seconds. This is a frequency difference of 1.25 parts times 10^{-11}.

Figure C25 is a comparison made between the rubidium oscillators (SN 124 and SN 128) at 100 Mc. There is about one cycle difference in frequency in 2560 seconds. This is a frequency difference of 0.39 parts times 10^{-11}.

Figure C26 is a comparison made between the rubidium oscillator (SN 124)

Figure C18 RUBIDIUM OSCILLATOR vs CESIUM BEAM OSCILLATOR

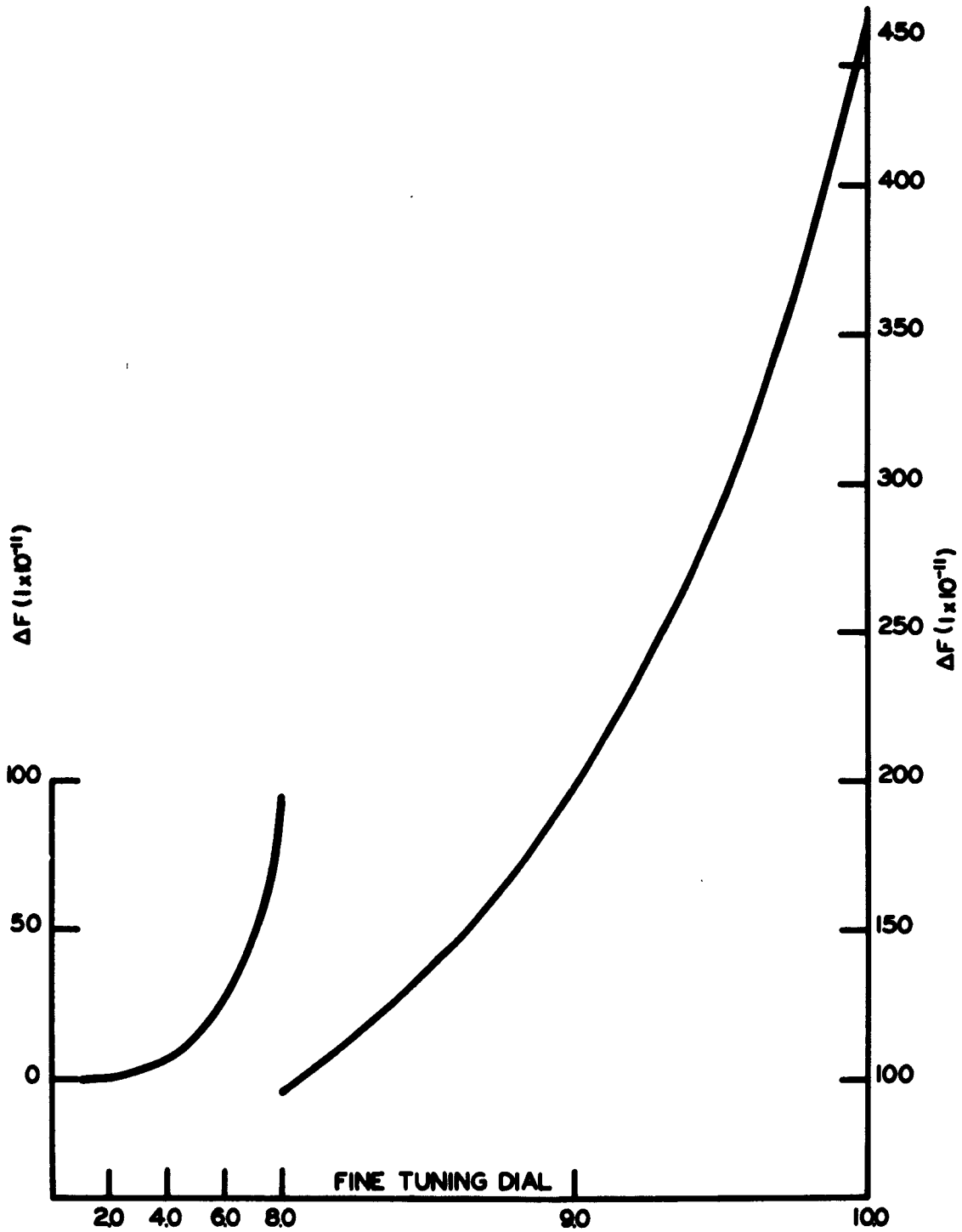

Figure C19 CALIBRATION CURVE, RUBIDIUM OSCILLATOR SN 128

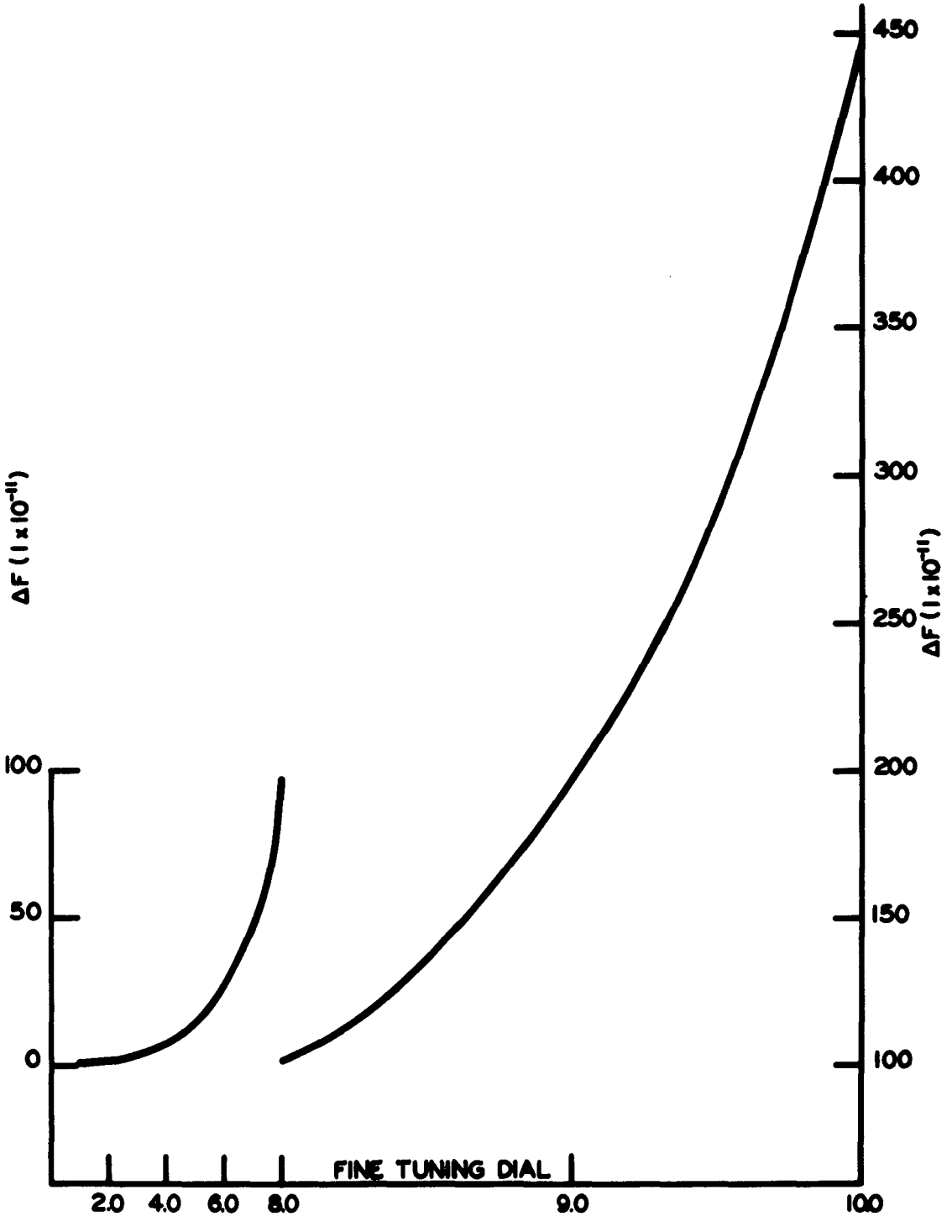

Figure C20 CALIBRATION CURVE, RUBIDIUM OSCILLATOR SN 124

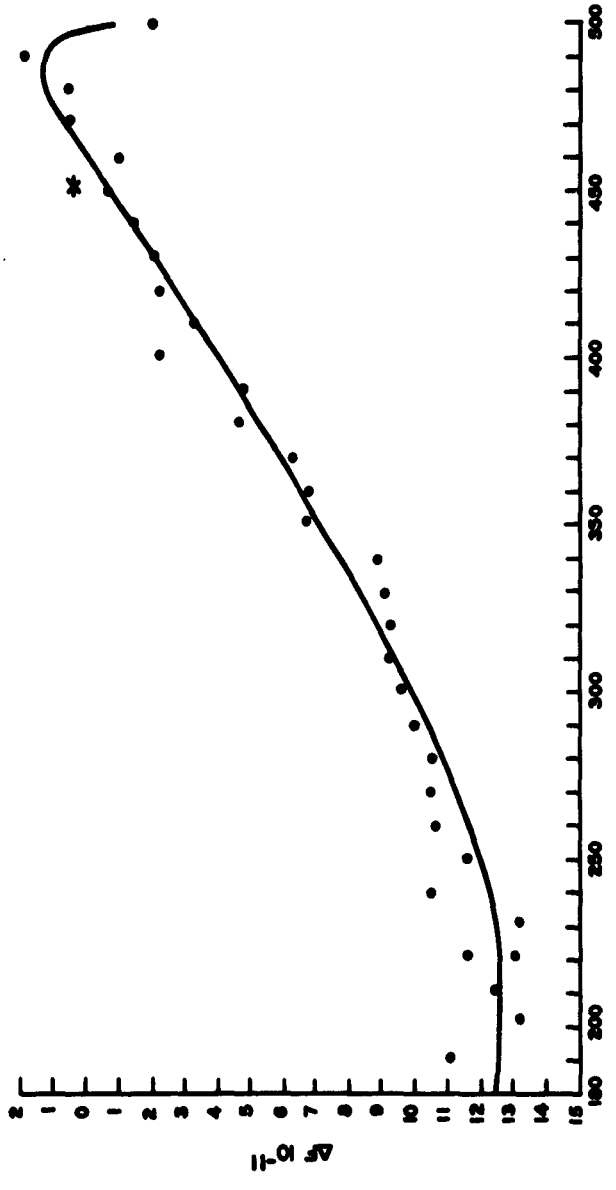

Figure C21 CALIBRATION CURVE, CESIUM BEAM OSCILLATOR SN S206

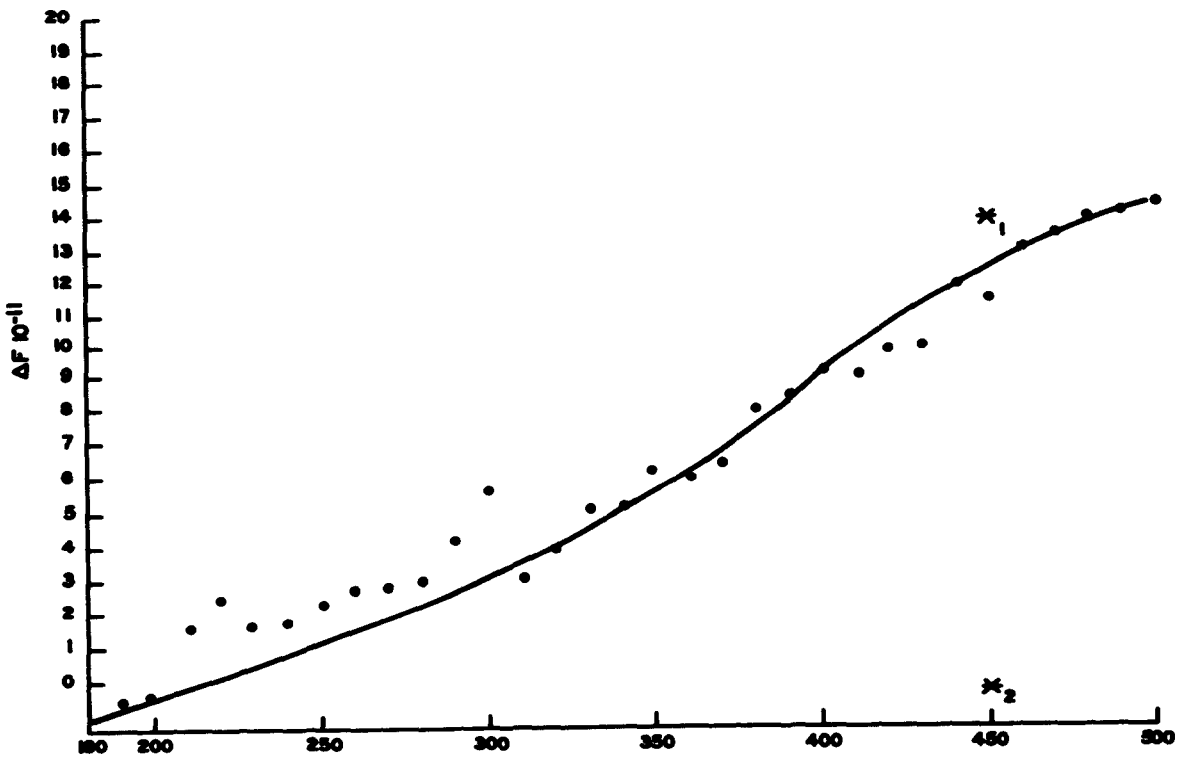

Figure C22 CALIBRATION CURVE, CESIUM BEAM OSCILLATOR SN S207

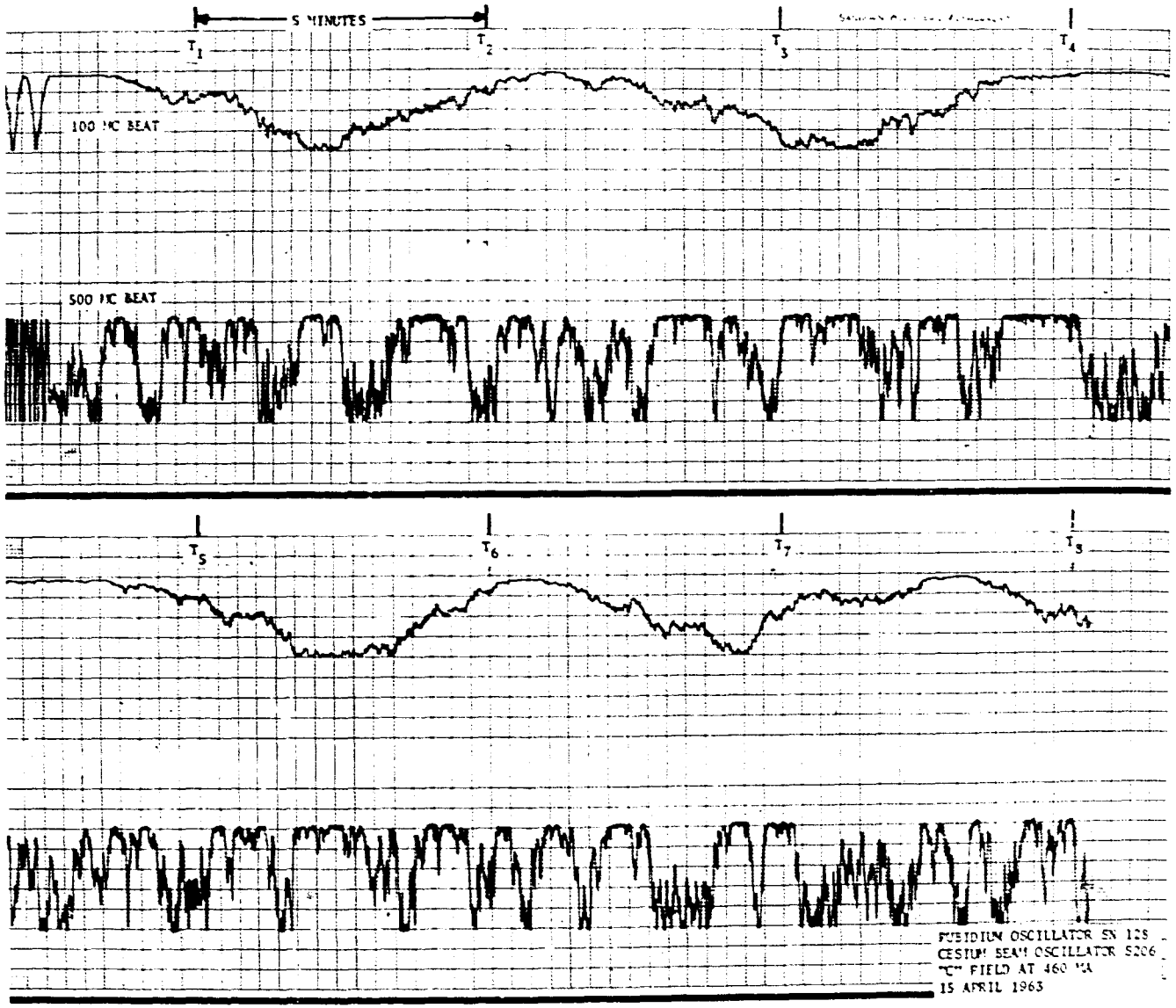

Figure C23 RUBIDIUM OSCILLATOR, SN 128 vs CESIUM BEAM OSCILLATOR SN S206

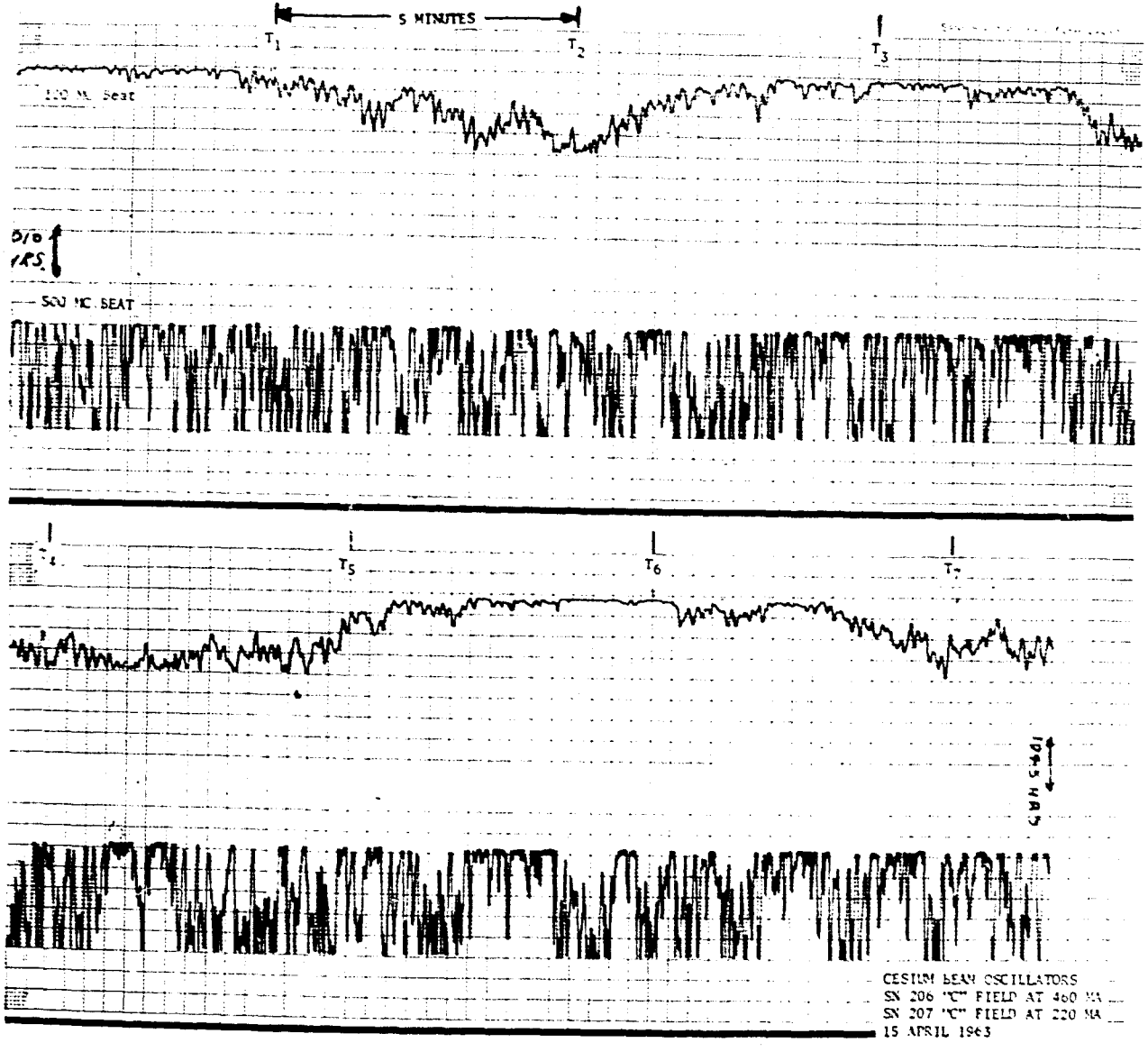

Figure C24 CESIUM BEAM OSCILLATOR, SN 128 vs CESIUM BEAM OSCILLATOR, SN S207

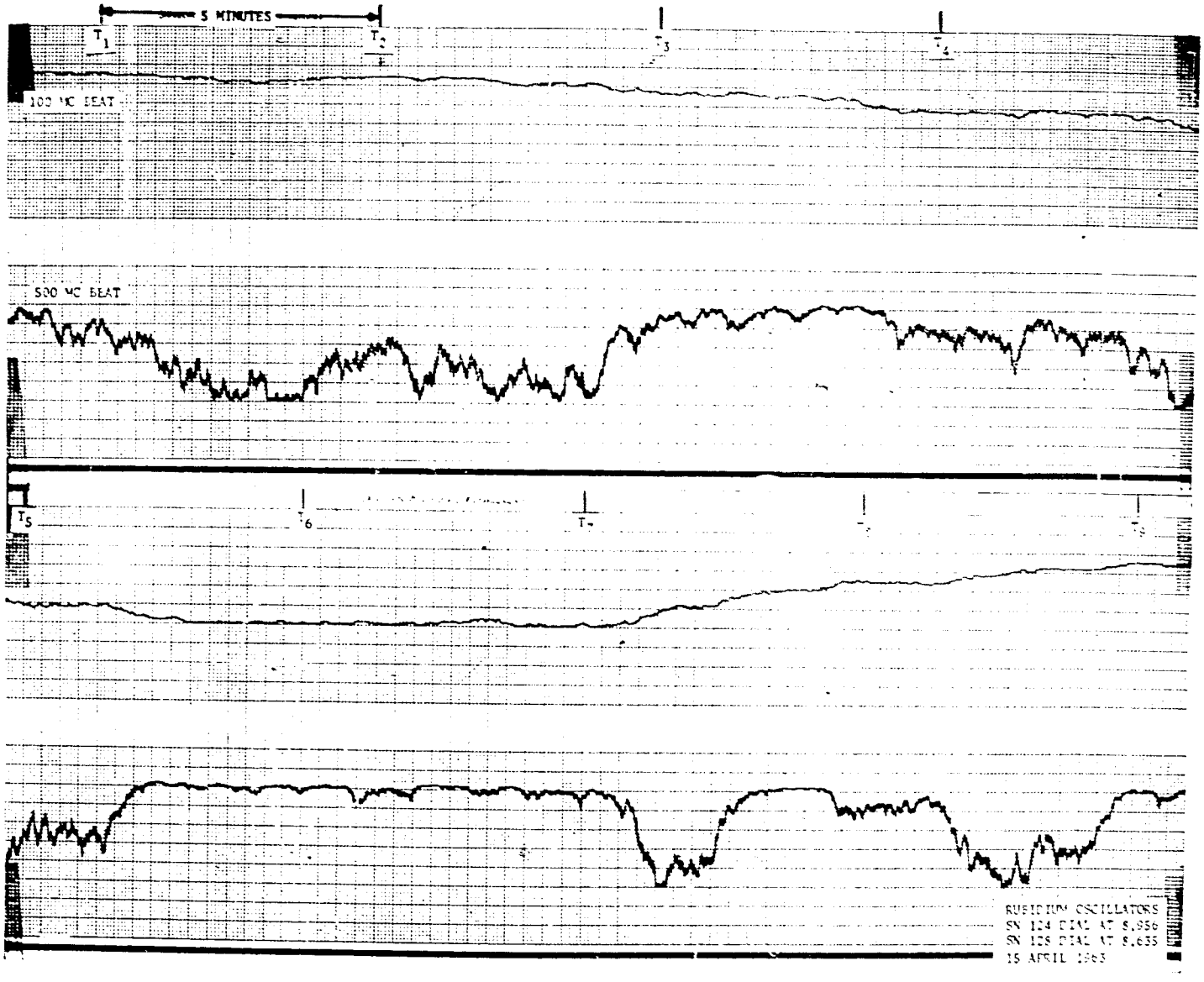

Figure C25 RUBIDIUM OSCILLATOR, SN 124 vs RUBIDIUM OSCILLATOR,SN 128

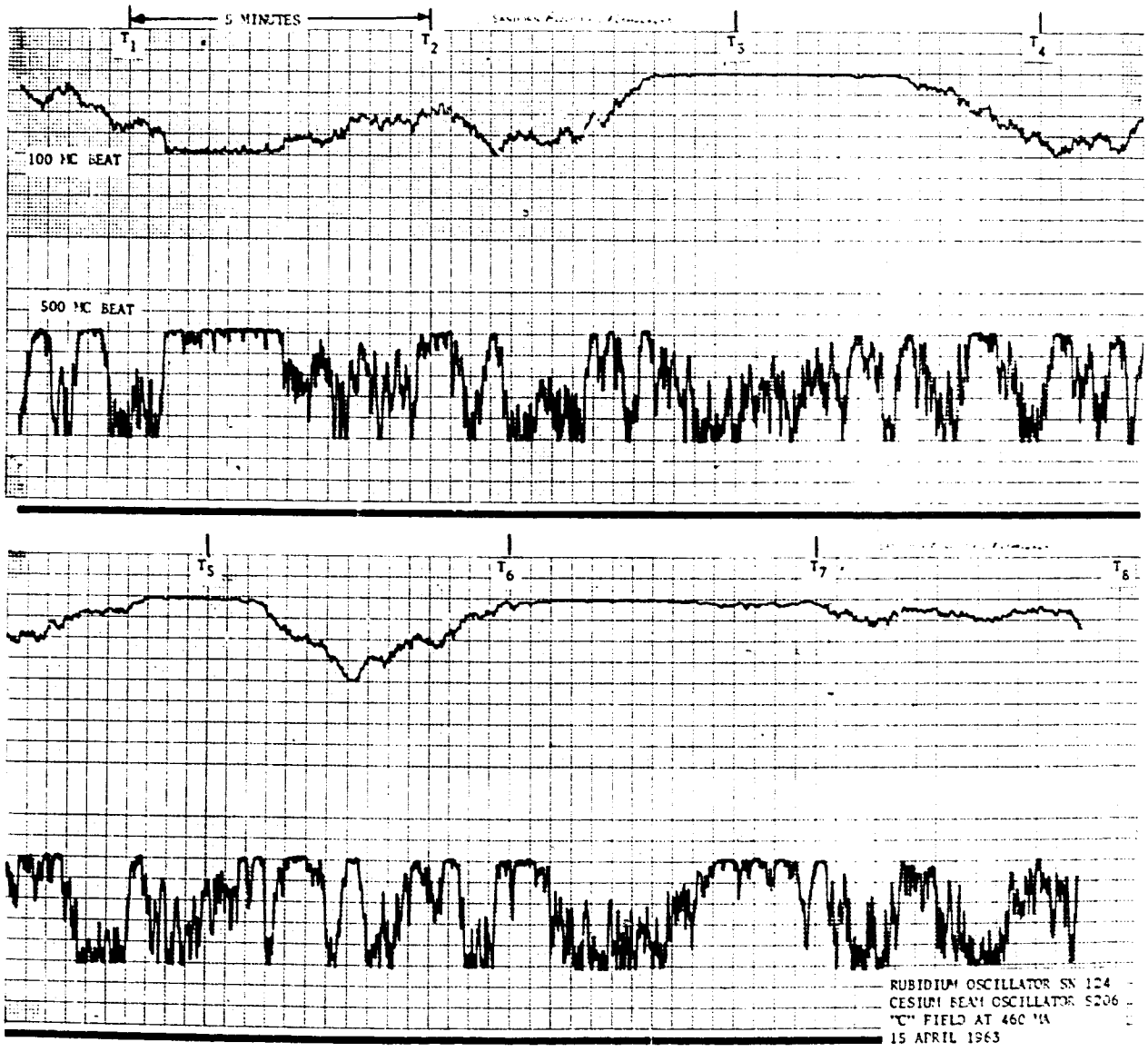

Figure C26 RUBIDIUM OSCILLATOR, SN 124 vs CESIUM BEAM OSCILLATOR, SN S206

and the cesium beam oscillator (SN S206) at 100 Mc. There is about three cycles difference in frequency in 2180 seconds. This is a frequency difference of 1.38 parts times 10^{-11}.

These figures also show the difference in phase shift of the oscillators. When the oscillators are very close in frequency, the outputs at 500 Mc are much rougher when the cesium oscillators are used.

The C-Field settings that follow are considered to be the reference frequency setting of the oscillators.

a. Cesium beam oscillator, SN S207 - C-Field at 220 Ma.

b. Cesium beam oscillator, SN S206 - C-Field at 460 Ma.

c. Rubidium oscillator, SN 124 - dial setting at 8.95.

d. Rubidium oscillator, SN 128 - dial setting at 8.63.

TABLE I

CESIUM BEAM OSCILLATOR ANALYSIS

Short term analysis was made at 100 Mc with both C-Fields at 450 Ma. Results of the analysis follow:

11 October 1962

46.6 seconds average period based on 10 period averages

2.146×10^{-10} frequency difference.

8.75×10^{-11} peak frequency variation

13 March 1962

69.5 seconds average period based on 10 period average

1.4388×10^{-10} frequency difference

1.0304×10^{-10} peak frequency variation

15 March 1962

58.9 second average period based on 100 period average

1.6978×10^{-10} frequency difference

1.284×10^{-10} peak frequency variation

APPENDIX D

FREQUENCY SYNTHESIZER

The frequency synthesizer was designed to provide a frequency output, variable in one cycle steps from 81.954 Kc to 81.964 Kc with an additional step of 81.964270 Kc. This allows the radar operator to change the radar's ranging frequency as a function of the index of refraction. The final step corresponds to the average free space velocity of light without any correction for the index of refraction.

To reduce distortion subminiature vacuum tubes are used in the prototype model. In addition, they provide impedance matching and high isolation. The tubes were derated to increase reliability.

A regenerative type mixer is used as the frequency divider for the same reason.

Figures D1 through D12 show the complete layout of this prototype equipment.

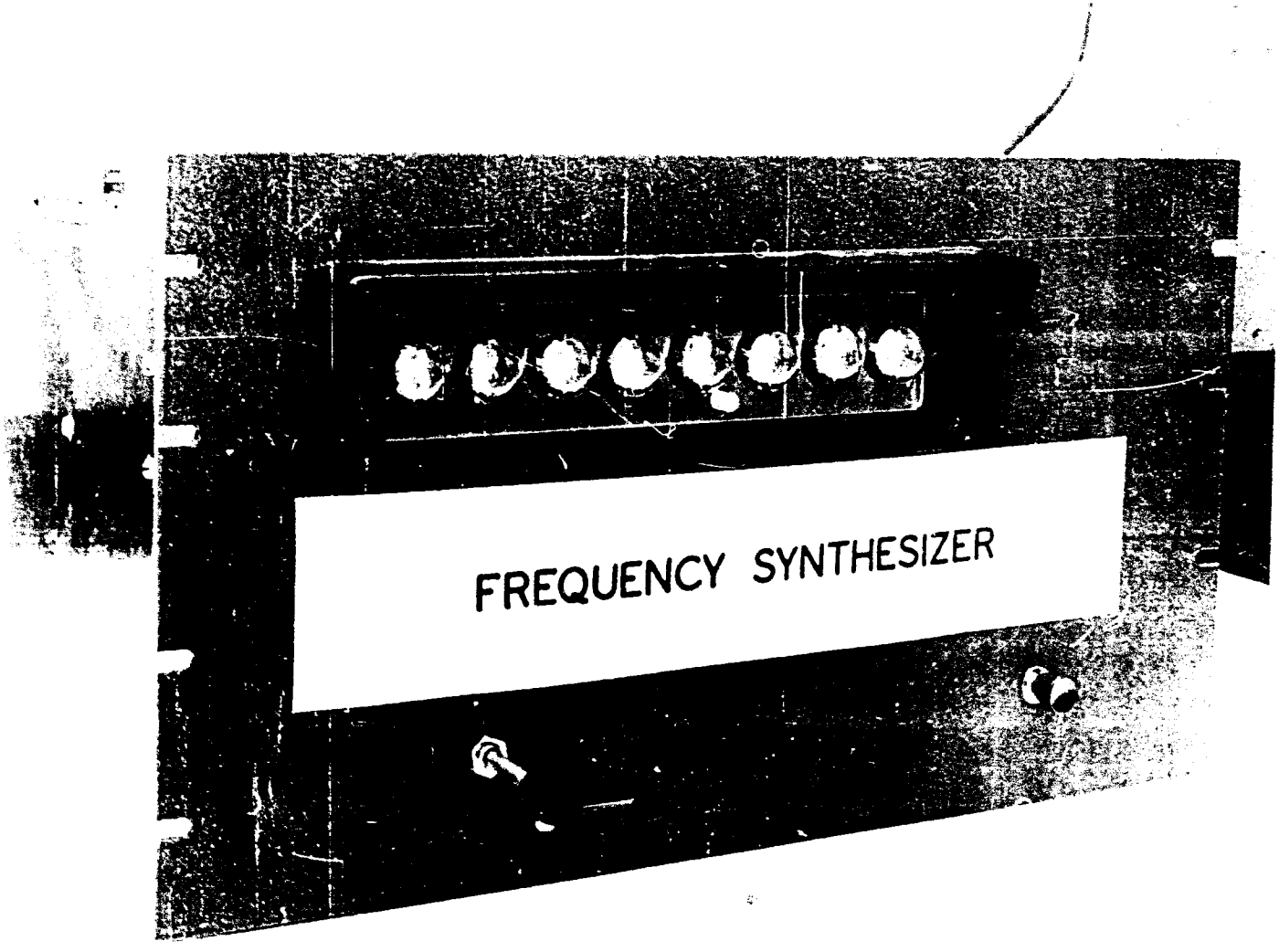

Figure D1 FREQUENCY SYNTHESIZER, FRONT VIEW

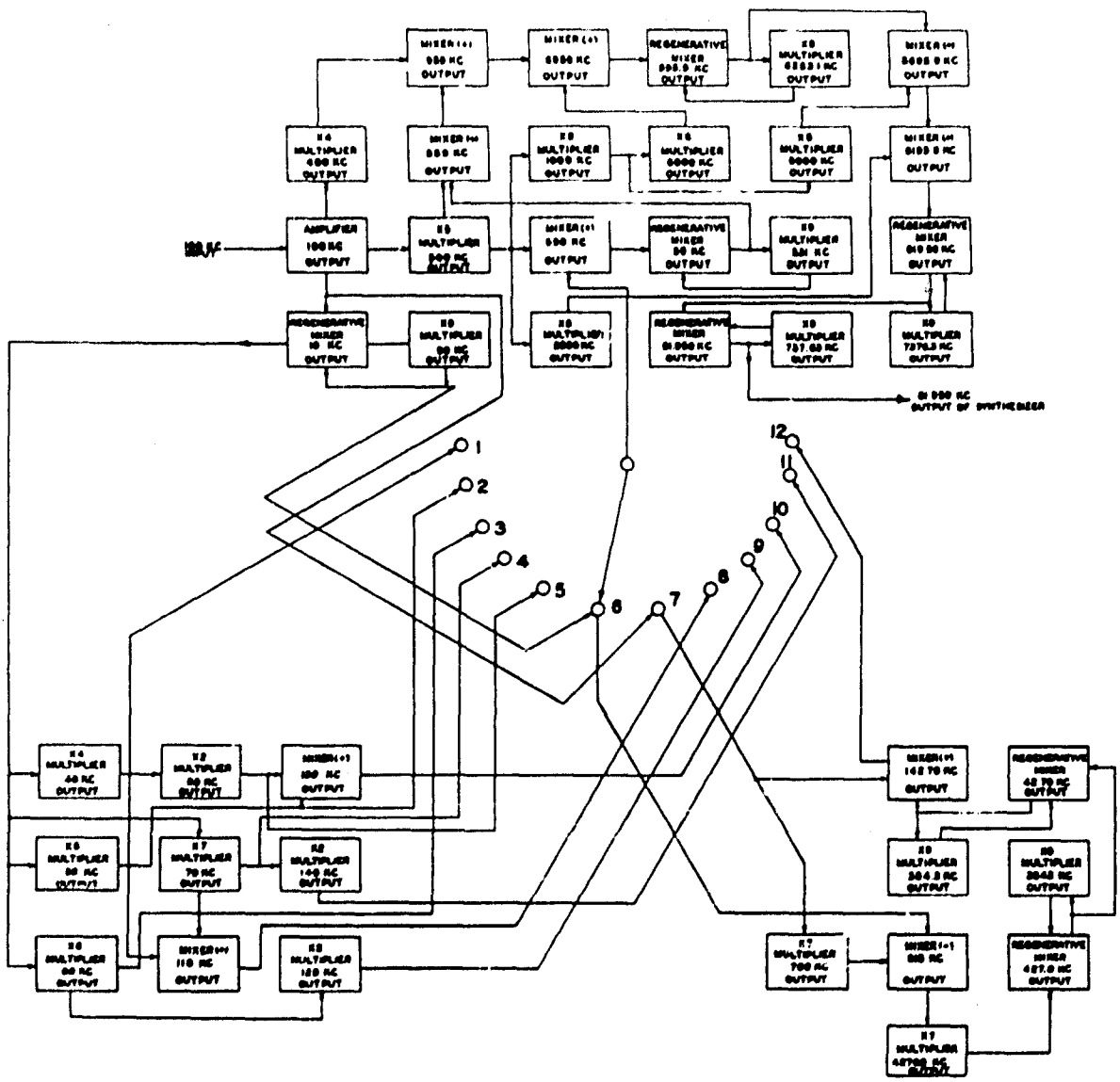

Figure D2 FREQUENCY SYNTHESIZER, BLOCK DIAGRAM

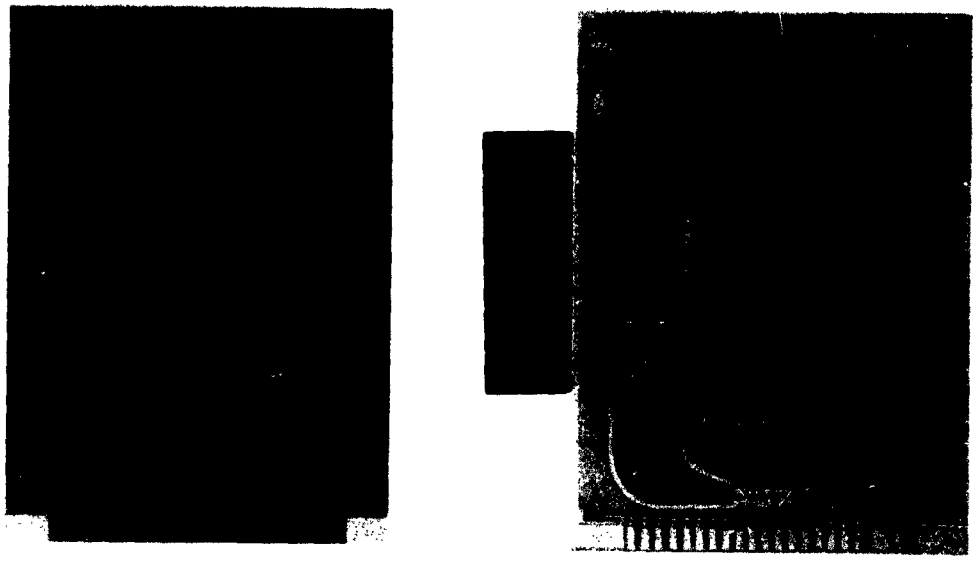

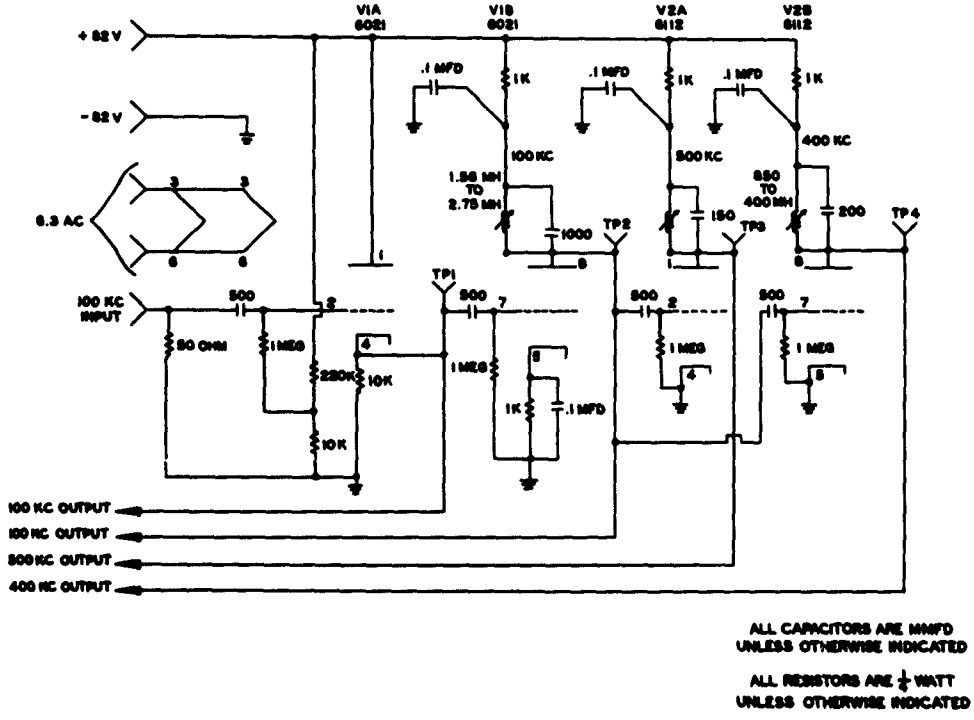

ALL CAPACITORS ARE MMFD UNLESS OTHERWISE INDICATED

ALL RESISTORS ARE $\frac{1}{2}$ WATT UNLESS OTHERWISE INDICATED

Figure D3 **FREQUENCY SYNTHESIZER, CARD 1**

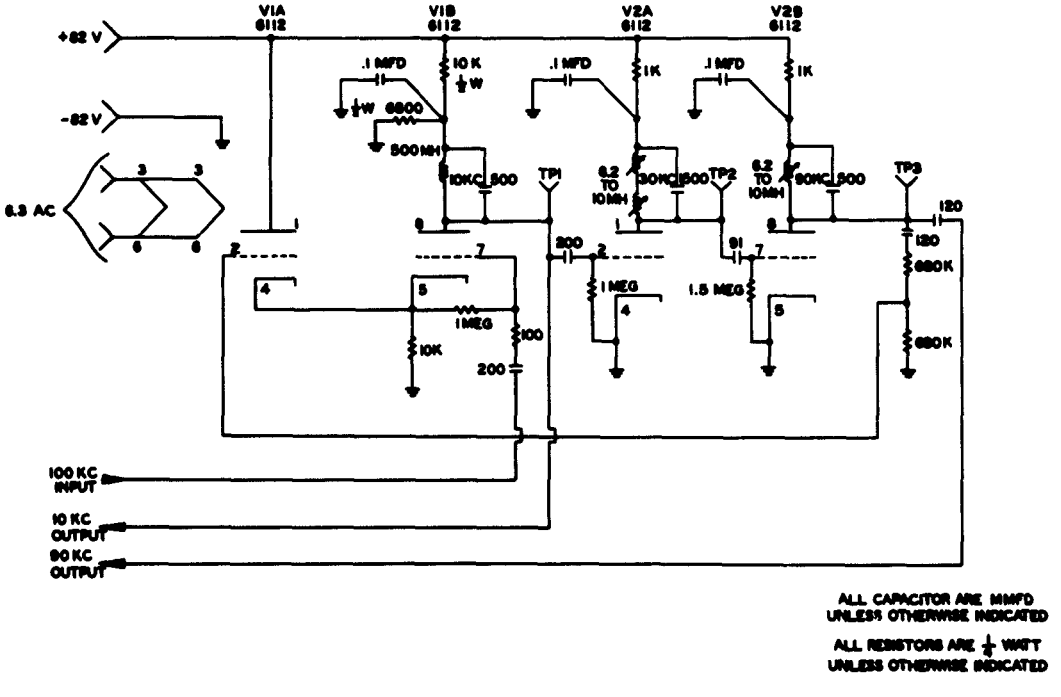

Figure D4 **FREQUENCY SYNTHESIZER, CARD 2**

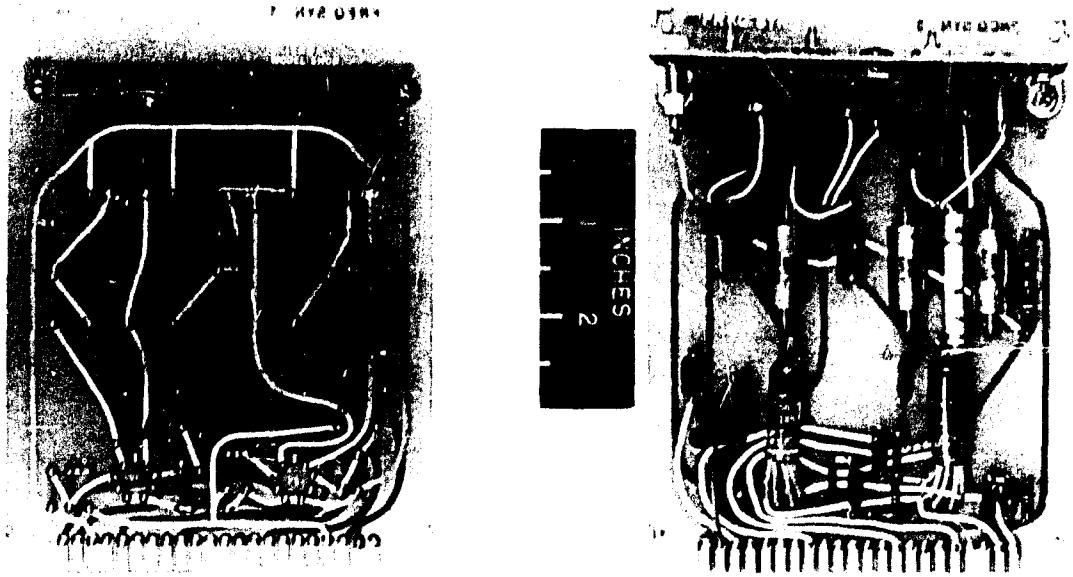

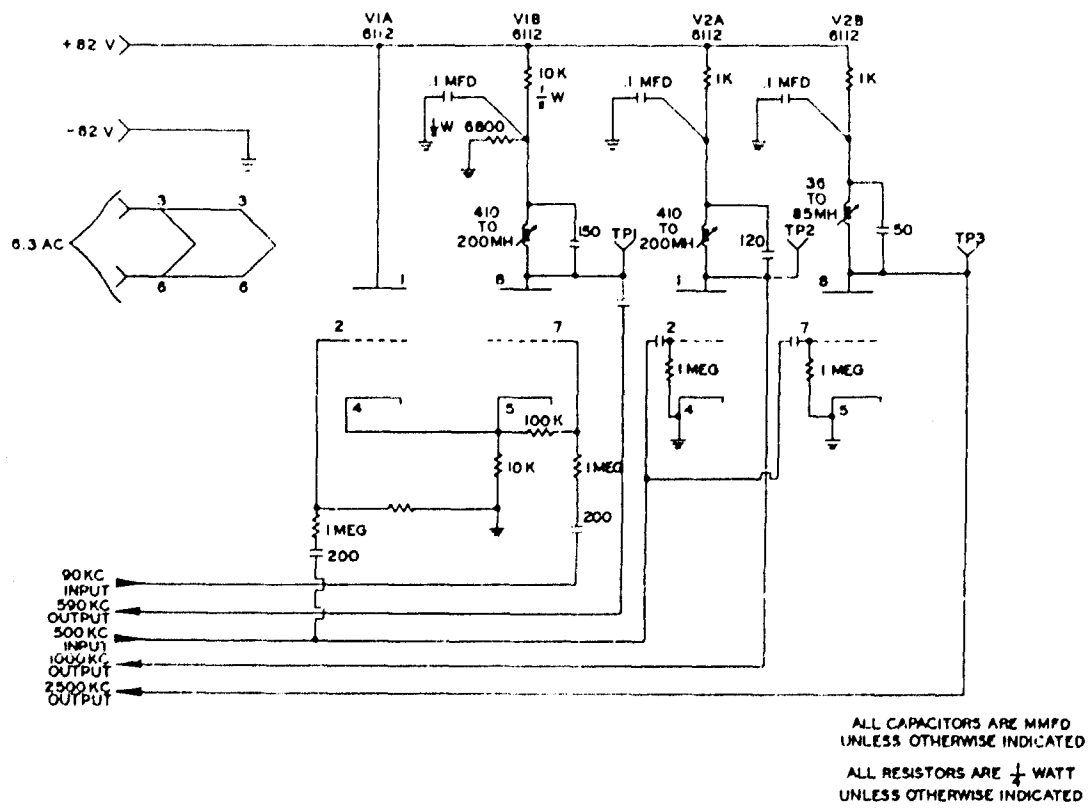

Figure D5 FREQUENCY SYNTHESIZER, CARD 3

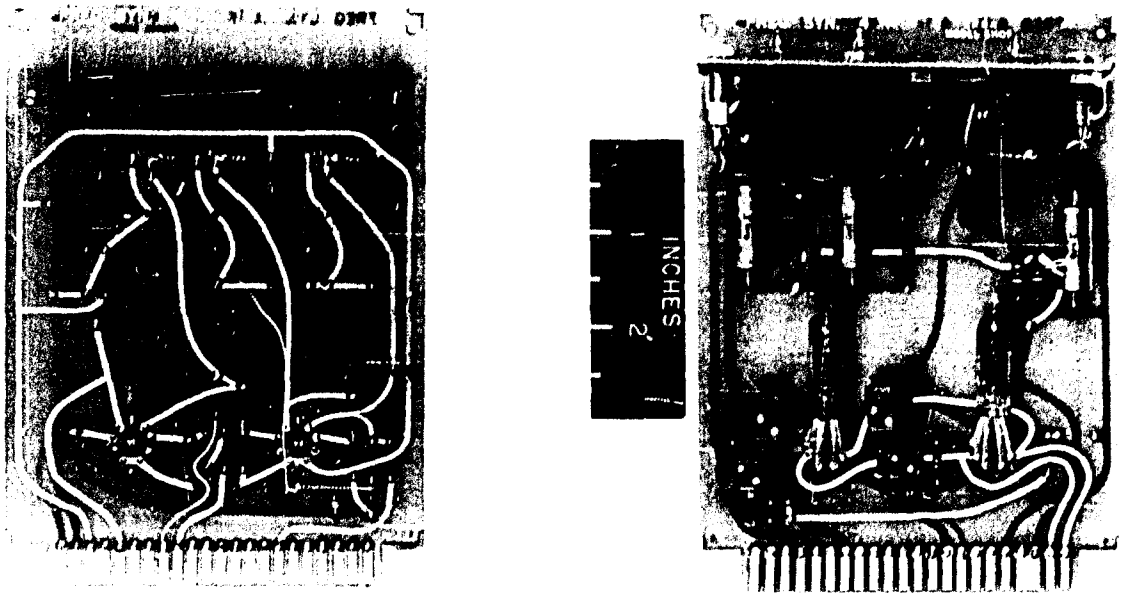

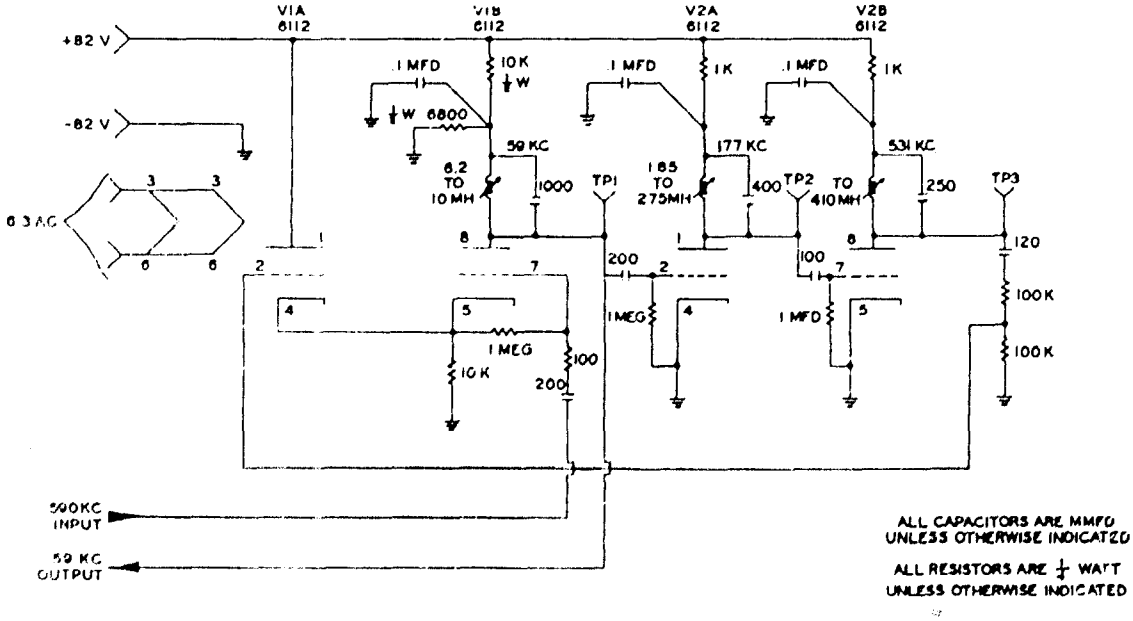

Figure D6 FREQUENCY SYNTHESIZER, CARD 4

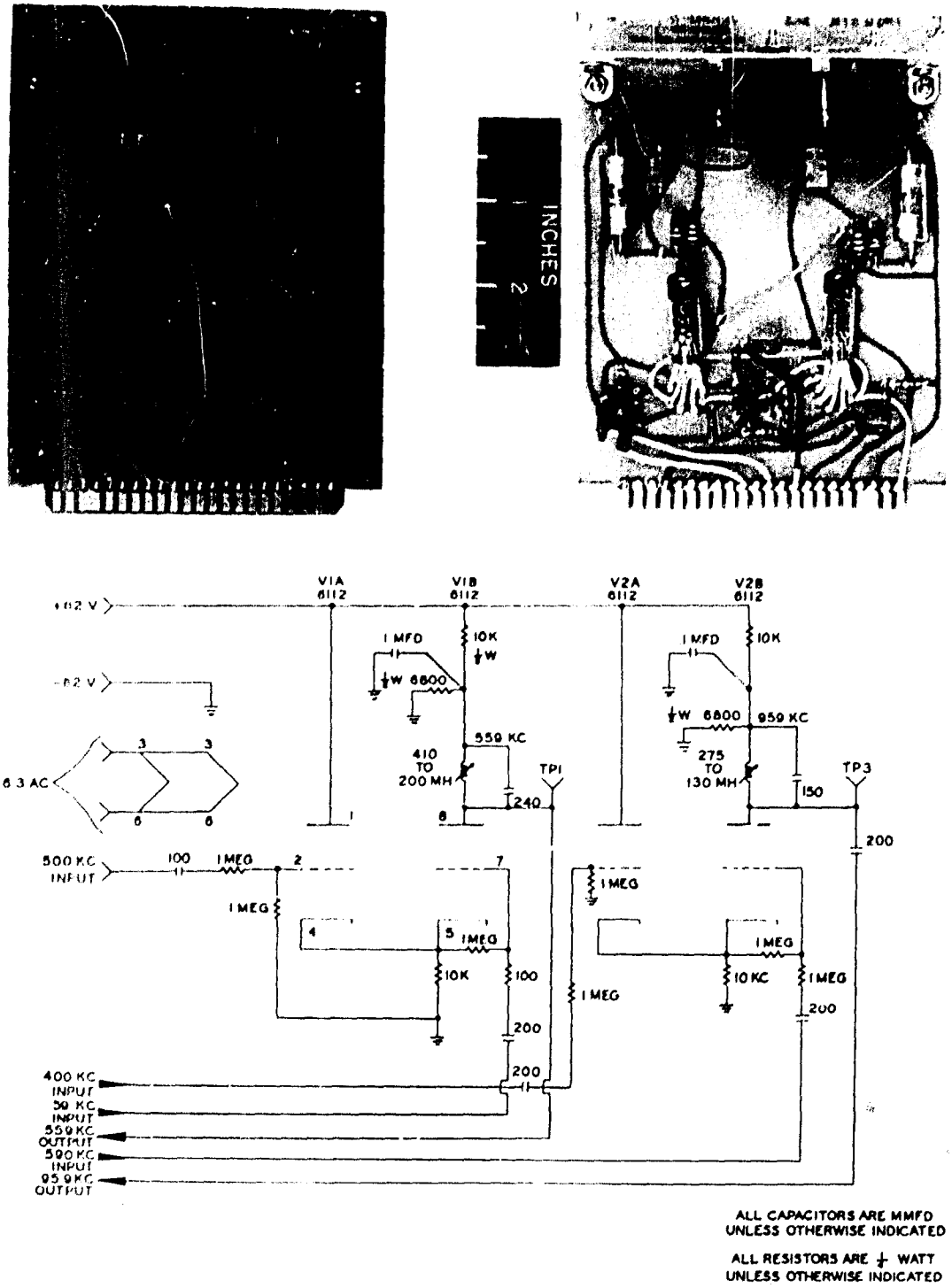

Figure D7 FREQUENCY SYNTHESIZER, CARD 5

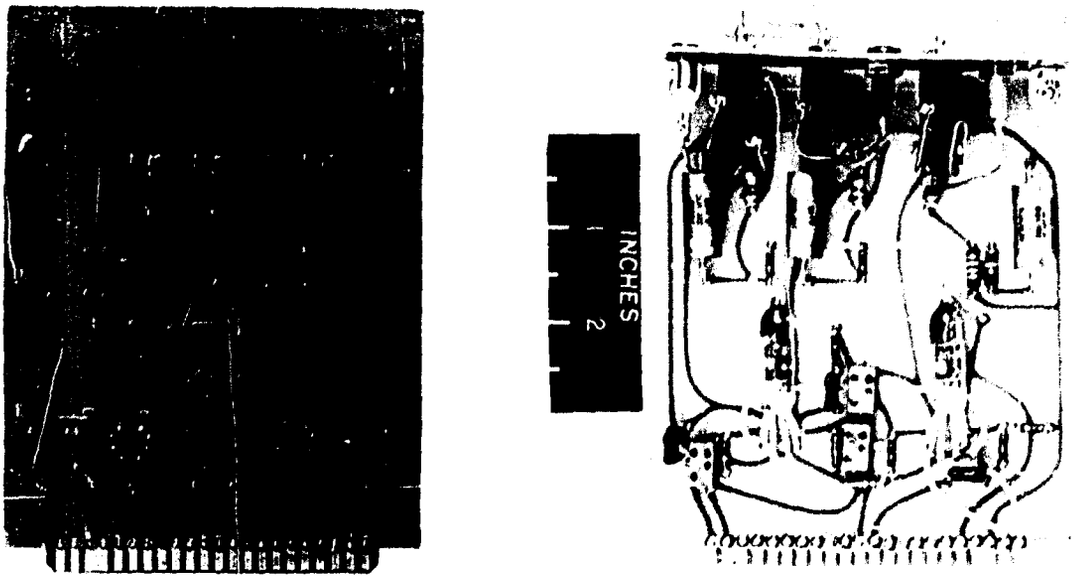

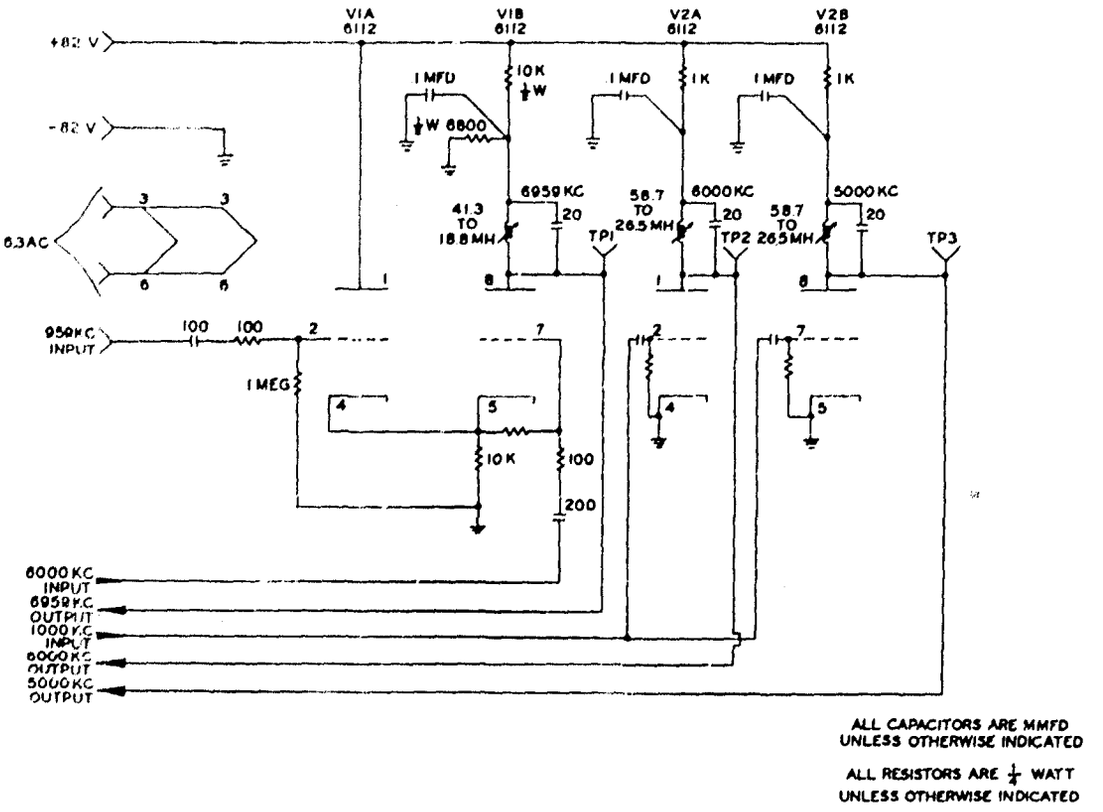

Figure D8 FREQUENCY SYNTHESIZER, CARD 6

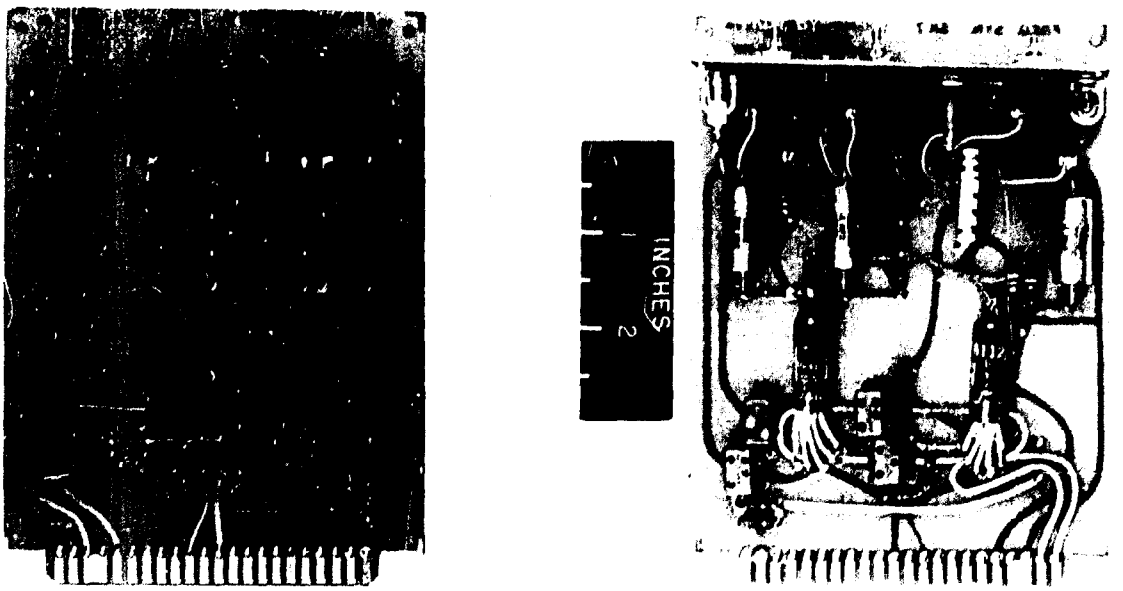

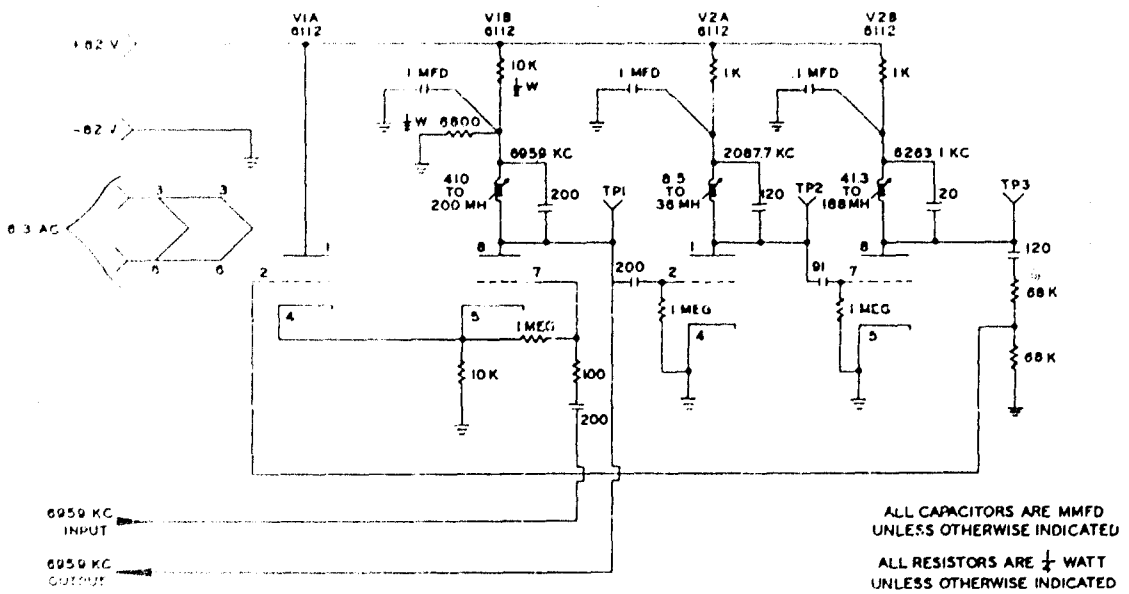

Figure D9 FREQUENCY SYNTHESIZER, CARD 7

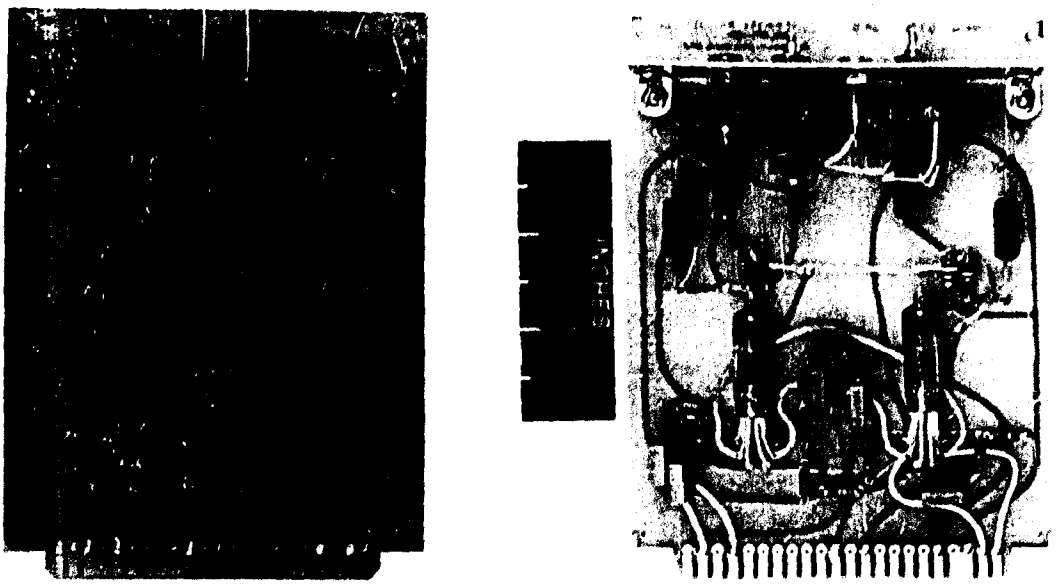

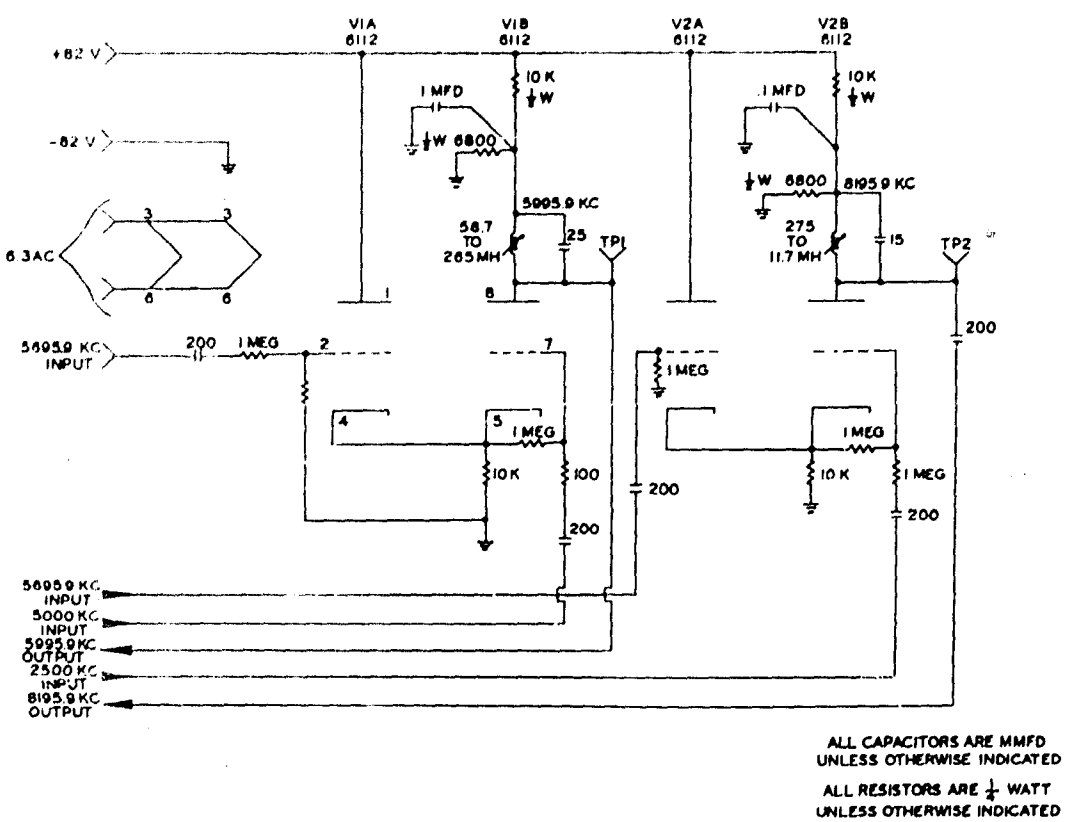

Figure D10 FREQUENCY SYNTHESIZER, CARD 8

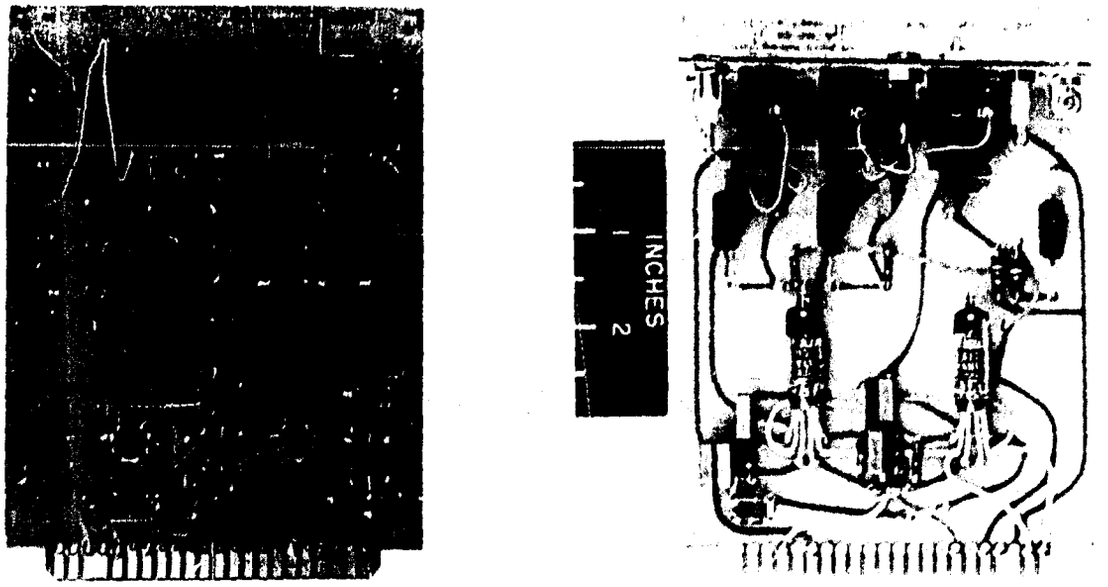

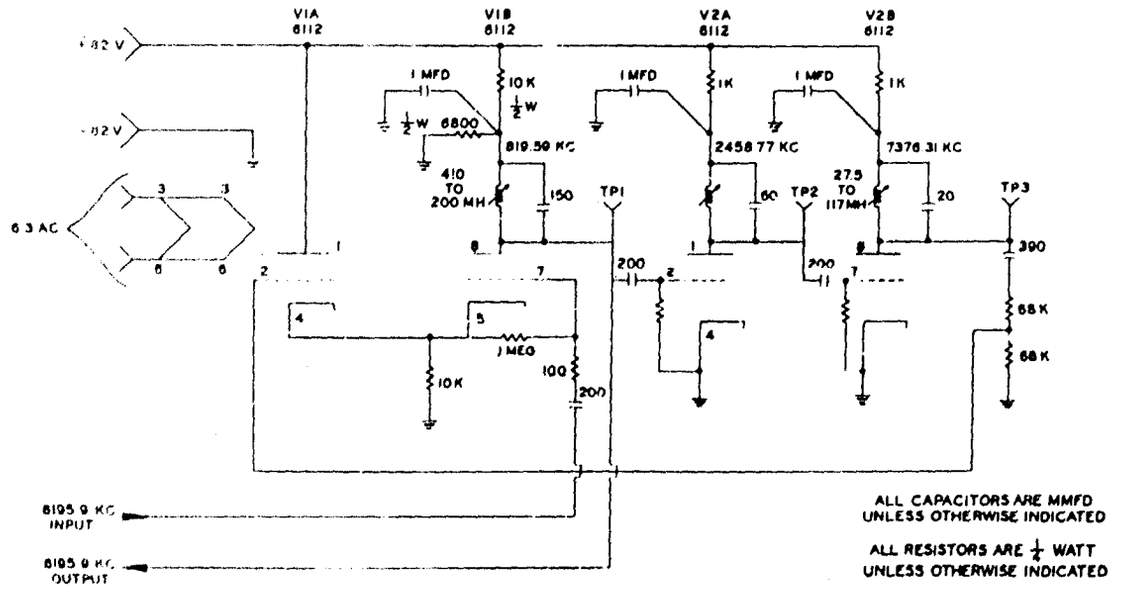

Figure D11 FREQUENCY SYNTHESIZER, CARD 9

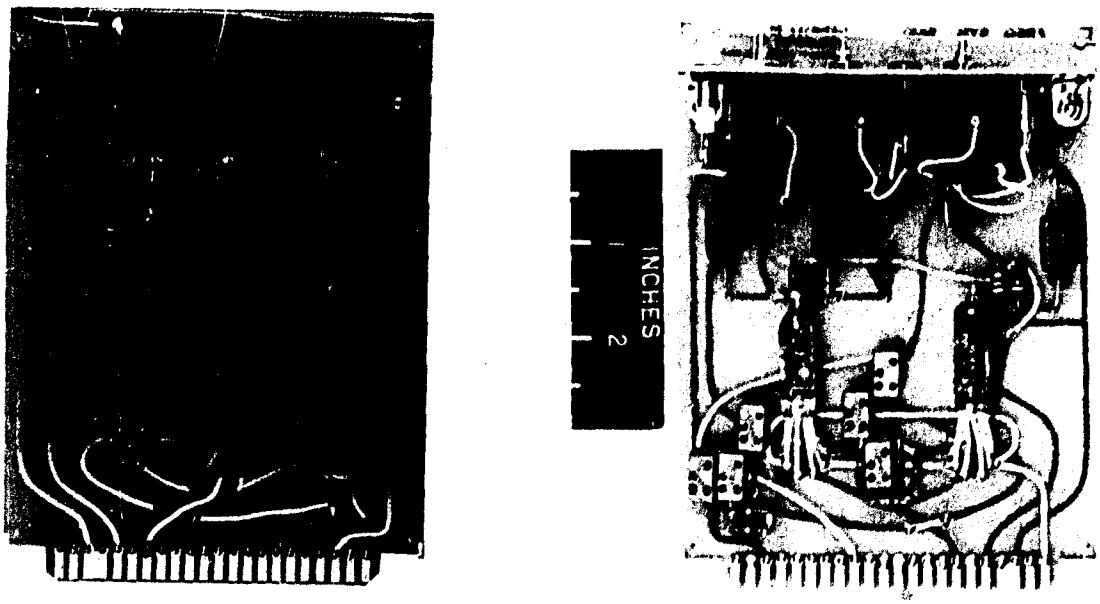

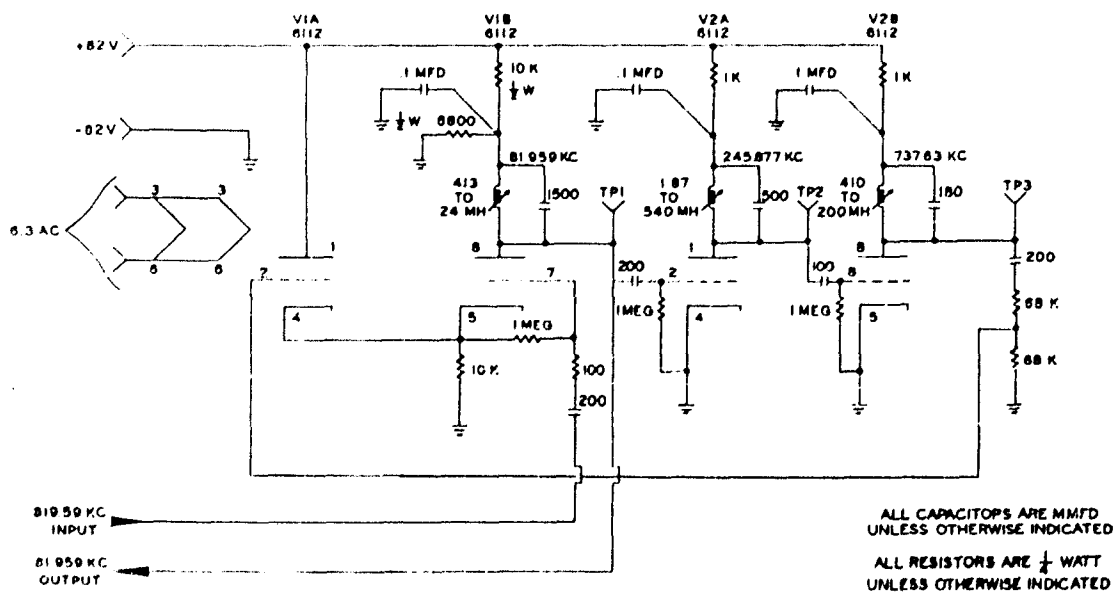

Figure D12 FREQUENCY SYNTHESIZER, CARD 10

A P P E N D I X E

PRF GENERATOR AND CONTROL SYSTEM

GENERAL

The atomic type oscillators are designed to be used with the AN/FPS-16 Radars. They have an output frequency comparable to the crystal frequency of the AN/FPS-16 Radars, 81.959 Kc. The units were designed first to replace the normal radar crystal frequency and utilize the existing radar PRF generators. An auxiliary control system was designed to be used, when the AN/FPS-16 radar pulse repetition frequency (PRF) is changed, or when used with radar systems requiring other PRF controls. This control system provides for stepping the PRF period in 2000 yard steps and 32000 yard steps either to decrease or increase the period in relation to a second radar system.

Another radar system uses a gated oscillator, or a start-stop oscillator system. The range in this type system is measured accurately from the time the oscillator is started. Only one start pulse is required for PRF synchronization in this case. If the additional accuracy of the ultra-stable oscillators is to be used for ranging, as well as for synchronization, a gating method for using the continuous running ultra-stable oscillator is required.

A PRF control and synchronization system was designed to provide a remote PRF control independent of the radar. It further provides a complete controllable PRF generator that can be used with the AN/FPS-16 Radars.

PRF CONTROL AND SYNCHRONIZATION SYSTEM

Remote PRF control and synchronization for AN/FPS-16 Radars, or any other radars, requires a sync pulse and/or an 81.959 Kc (82 Kc) sine wave input. Figures E1 through E6 show how the remote PRF control and separation can be obtained at the equipment.

For radars requiring only a remote start pulse, the output of the PRF pulse amplifier will be used. When used as a remote PRF control for the AN/FPS-16 Radar, the PRF pulse and the 82 Kc sine wave outputs will be used.

Figure E1 is a block diagram of the total unit. The 81.959 Kc (82 Kc) sine wave is peaked in the 82 Kc pipper. Outputs are negative and positive pulses.

The negative pulses are counted by the 12 flip-flops (FF). The output of the FF are patched into the PRF control gates, which are a series of AN/Gates. Use of one AN/Gate at a time is enabled by a remote control switch. The AN/Gate selected will have an output pulse when all the inputs are positive. The output pulse enables the next AN/Gate which has an output pulse when the next 82 Kc positive pulse occurs. This output is isolated in the output amplifier. It is also used to reset all the flip-flops. For systems requiring more than one PRF pulse out an auxiliary AN/Gate is provided. The 82 Kc pulse input to this AN/Gate is phase shifted to provide a variable delay of the pulse. This phase shifted signal is pipped in an identical circuit to the 82 Kc pipper.

Figure E2 is a block diagram of the 12 flip-flop circuits (FF) used to countdown the PRF pulses. Figure E3 is a schematic of the control AN/Gate to provide a prepatched PRF.

Figure E4 is a block layout of the patch panel. The top part of the patch panel provides 12 jacks for each FF marked FF_1 through FF_{12}. This allows for the patching of any FF output to any of the AN/Gates.

The bottom part of the patch of the patch panel is connected to 8 AN/Gates with 10 inputs to each AN/Gate. This allows patching any combination of 8 PRF's.

Figure E5 is a block diagram of part of the PRF control. It has 3 controls, one that will enable the PRF to be one 82 Kc interval short of the one normally used, this will enable one radar to move its times base in relation to another radar. The second control adds one 82 Kc interval, enabling the radar to move its time base in the opposite direction. The third control is the normal control used where the time bases are kept together. Figure E6 is a block diagram of the circuit permitting the shift of the PRF time base 32,000 yards instead of 2000 yards.

Figure E7 is a schematic block diagram of the circuit that permits the operator to control two preselected PRF's and alternate them. This will be used as a means of determining the nth times around and reducing the effect of the tracking dead space.

To determine the patching needed for required PRF, the countdown of the 82 Kc pulses is determined, for example, with a PRF of 341, the countdown is 240 and for PRF of 732 the countdown is 112.

If this number is considered as N, N-1 then should be converted to a binary number and this binary number patched from the PRF flip-flop (FF)

outputs to the AN/Gates, for example a PRF of 341 has a coutdown of 240 and N-1 is 239, which has a binary notation of 11101111. To patch this into this associated AN/Gate jumper the inputs from the 2^0output, the 2^1FF, the 2^2FF, the 2^5FF, the 2^6FF, the 2^7FF and the 2^8FF. (Note the 2^0 is the negative 82 Kc PIP and is not an output of a FF). This will provide an output of the AN/Gate at the 239th 82 Kc frequency pulse. The next 82 Kc pulse will set FF_2 and FF_5 of Figure E7, permitting the minus 16 thousand yards AN/Gate and the next positive 82 Kc PIP to be gated out. This provides the remote start pulse, which is used to reset the PRF FF's and trigger the radar.

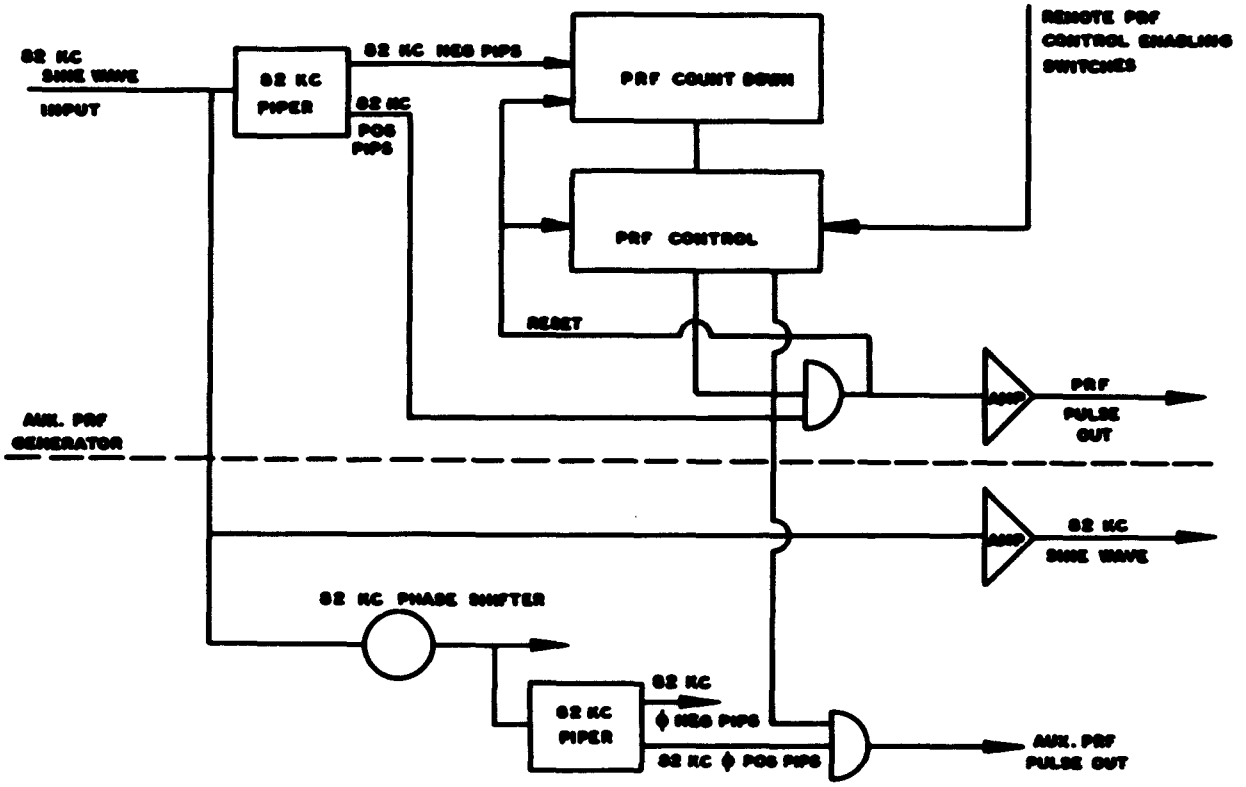

Figure E1 **PRF and SYNCHRONIZATION CONTROL UNIT**

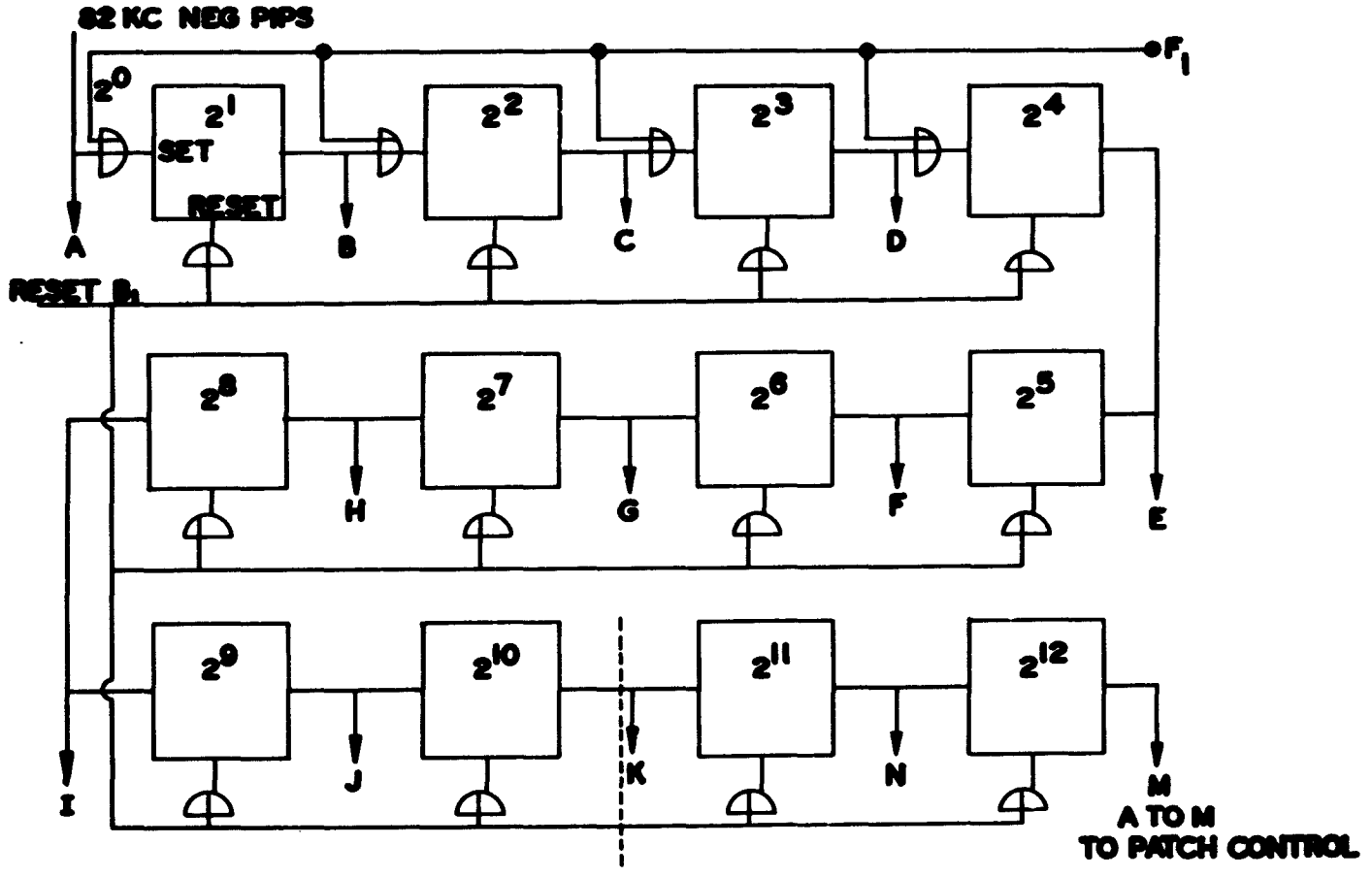

Figure E2 PRF COUNTDOWN FF

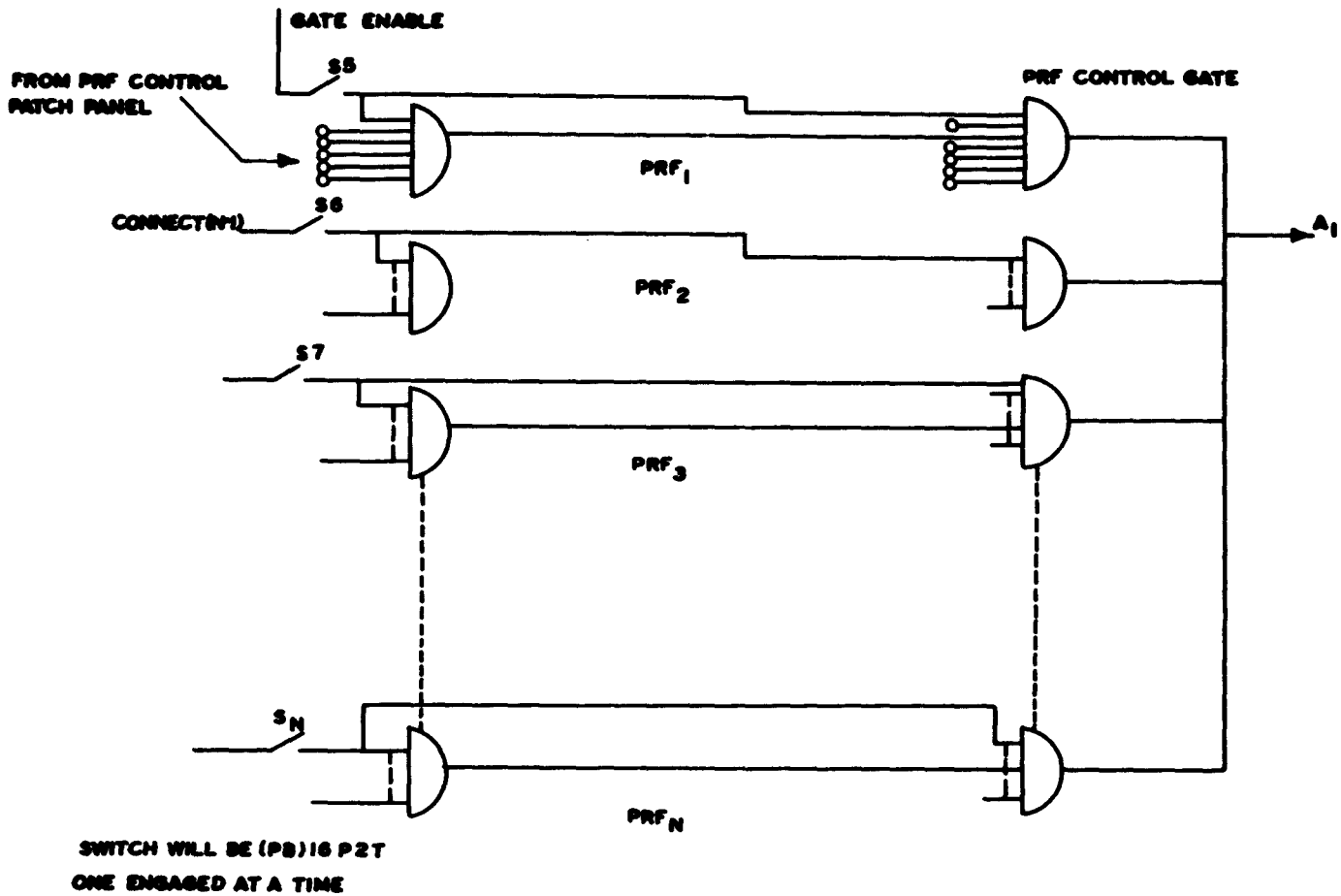

Figure E3 NORMAL PRF GENERATOR GATES

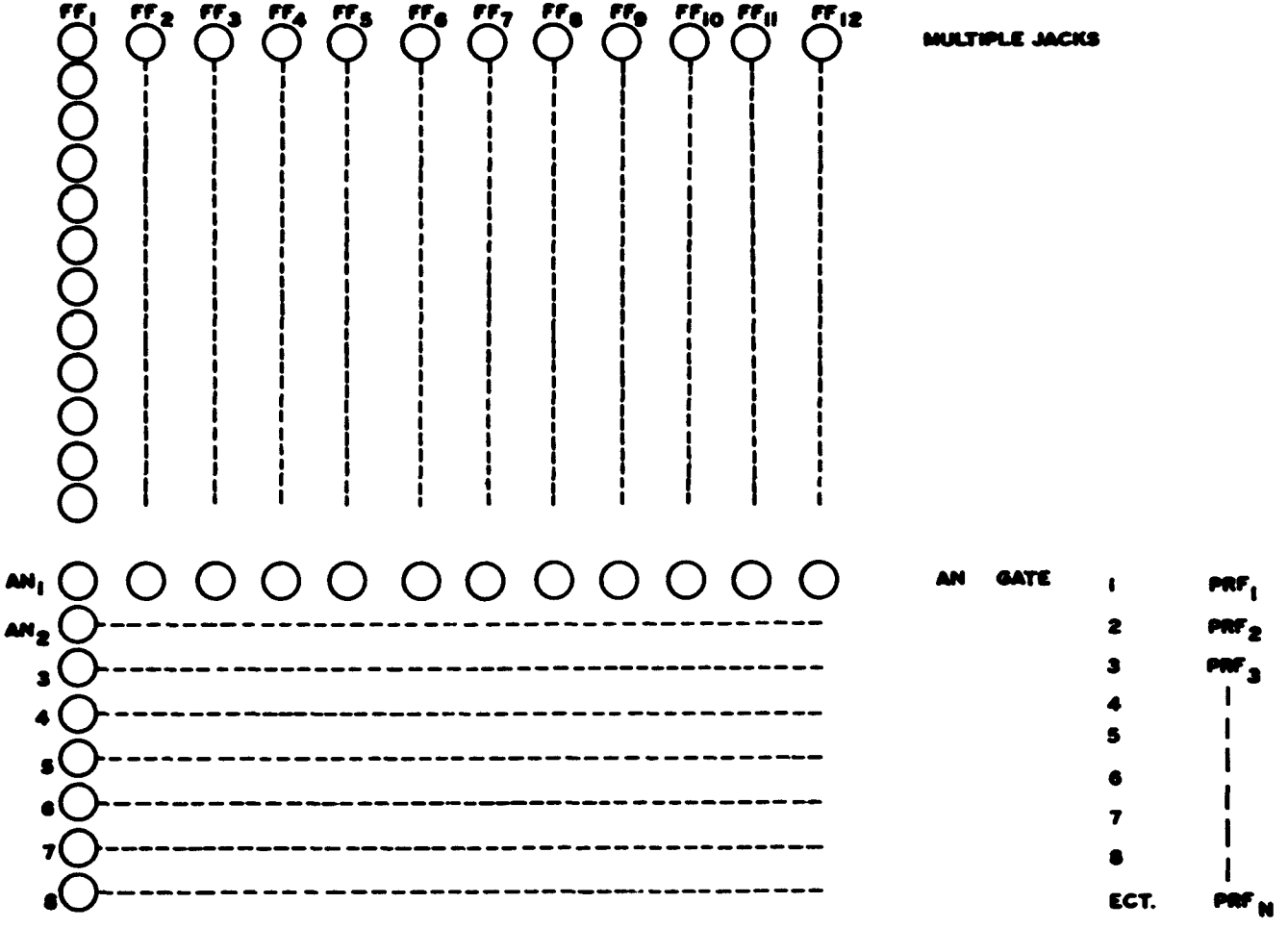

Figure E4 PRF CONTROL PATCH PANEL LAYOUT

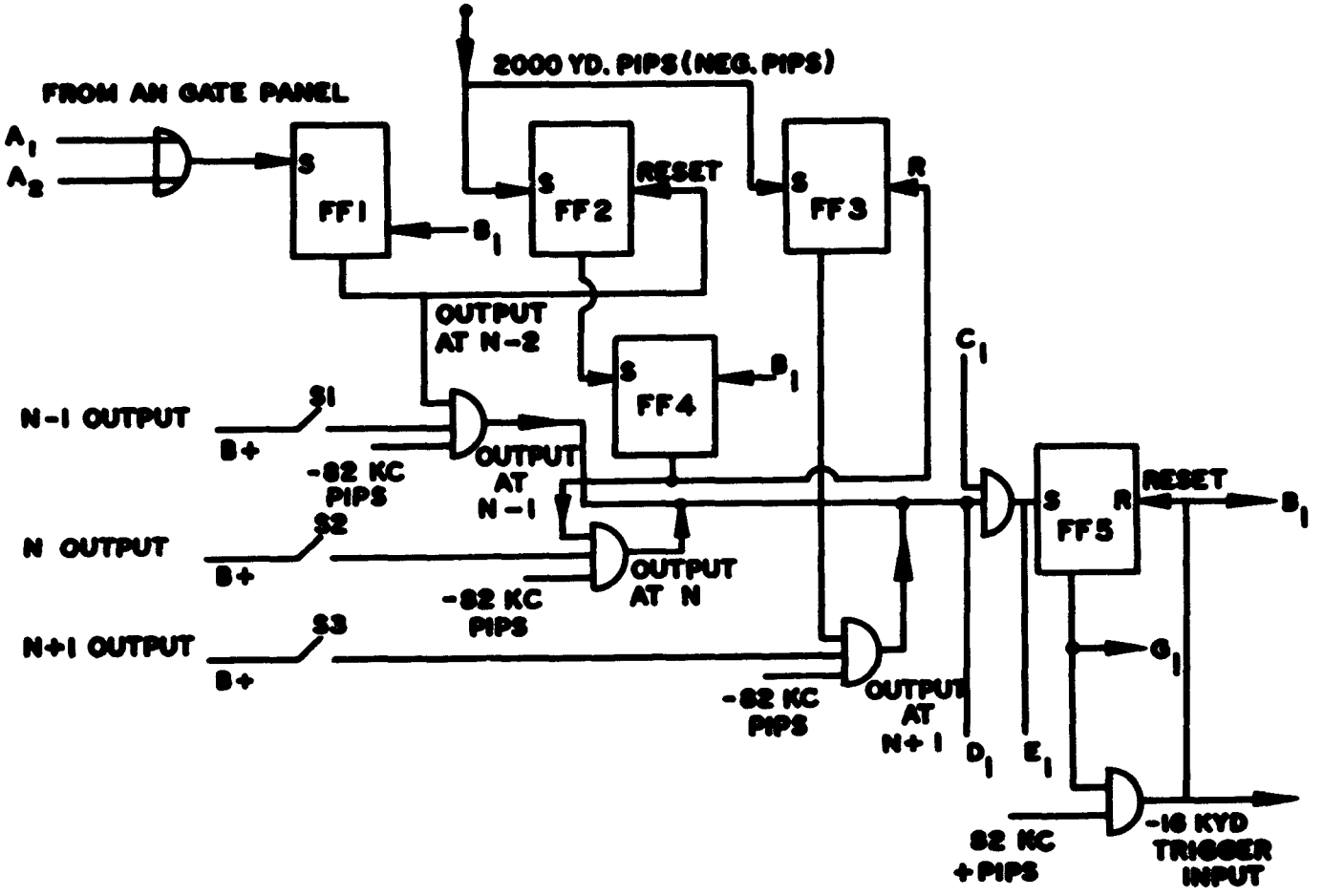

Figure E5 PRF CONTROL, NORMAL, IN, OUT

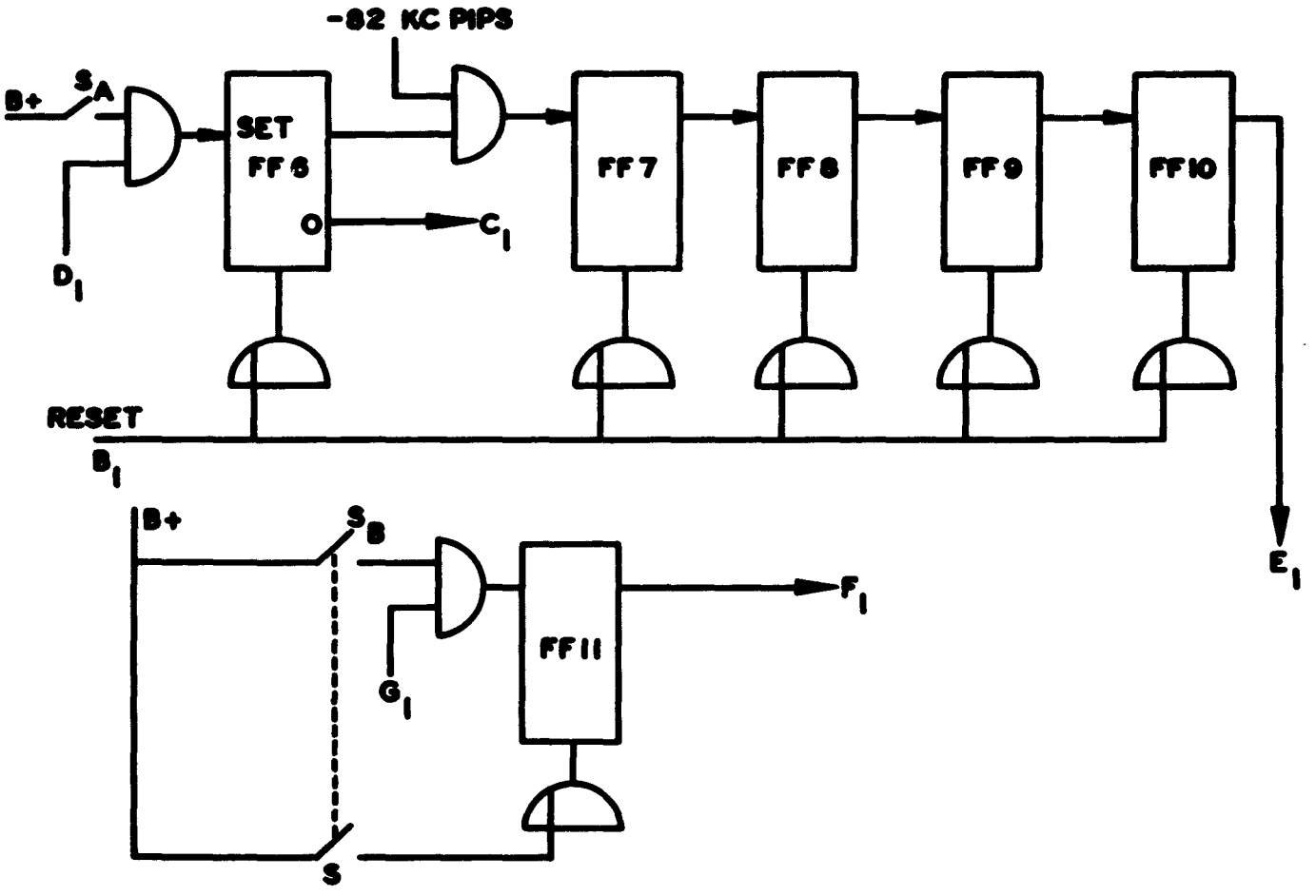

Figure E6

32,000 YD. PRF SHIFT

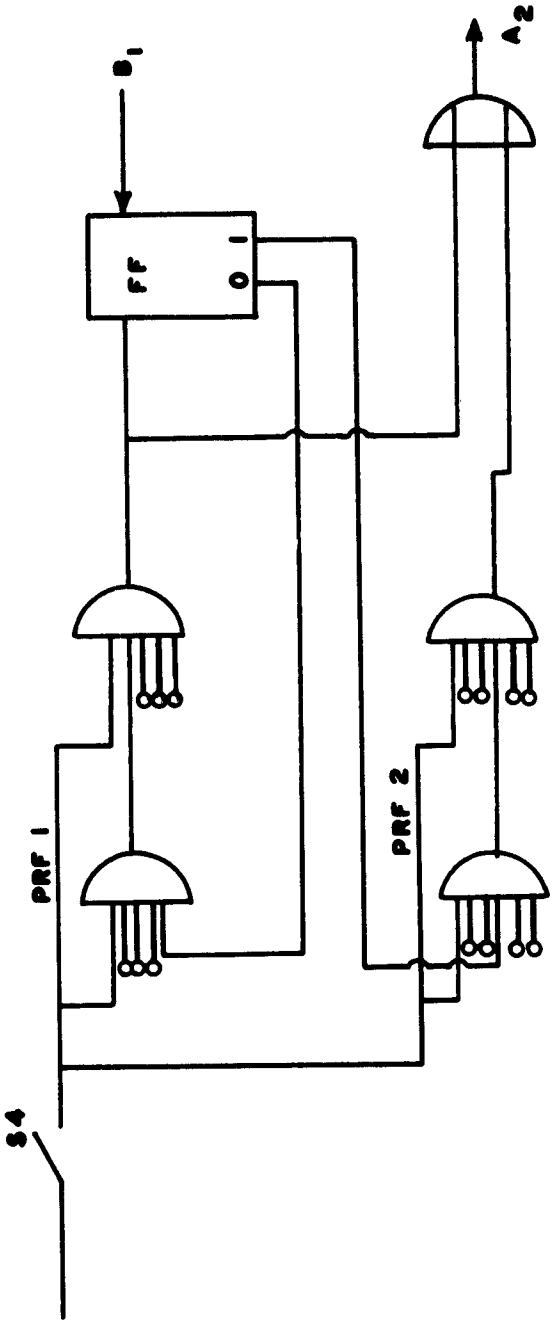

Figure E7 ALTERNATING PRF CONTROL, ONE of TWO PRESET

U. S. ARMY ELECTRONICS RESEARCH AND DEVELOPMENT ACTIVITY
WHITE SANDS MISSILE RANGE
NEW MEXICO

WILLIAM G. SKINNER
COLONEL, SIGNAL CORPS
COMMANDING

Approval. Technical Report USA ERDA-21 has been reviewed and approved for publication:

Paul R Smor

PAUL R. SMOR
Capt, SigC
Director
Instrumentation Department

for Richard D Kephart

JOHN L. McADORY
Acting Chief
Radar Systems Division

Distribution. This report has been distributed in accordance with SELWS-E List Nr. 1 and Special. Initial Printing 175 copies.

ASTIA Availability. Qualified requesters may obtain copies of this report from:

Armed Services
Technical Information Agency
Arlington Hall Station
ATTN: TIPCR
Arlington 12, Virginia

HEADQUARTERS
U. S. ARMY ELECTRONICS RESEARCH AND DEVELOPMENT ACTIVITY
WHITE SANDS MISSILE RANGE
NEW MEXICO

May 1963

1. Technical Report USA ERDA-21 has been prepared under the supervision of the Instrumentation Department and is published for the information and guidance of all concerned.

2. Suggestions or criticisms relative to the form, contents, purpose, or use of this publication should be referred to the Commanding Officer, U.S. Army Electronics Research and Development Activity, ATTN: SELWS-E, White Sands Missile Range, New Mexico.

FOR THE COMMANDER:

L. W. ALBRO
Major, AGC
Adjutant

AD ACCESSION NR

Instrumentation Department, U. S. Army Electronics Research and Development Activity, White Sands Missile Range, New Mexico

PRECISION SYNCHRONIZATION OF RADARS PHASE I, by Willis S. Parsons, Technical Report USA ERDA-21, 92 pp., incl. illus., May 1963.

UNCLASSIFIED Report

This report discusses a method of synchronizing radar systems by use of atomic oscillators. Synchronization will be accomplished by use of synchronized radars. The report discusses the laboratory analysis of the oscillators used.

UNCLASSIFIED

1. Multiradar Synchronization
2. Radar Pulses
3. Radar Ranging
4. Oscillators, Atomic
5. Oscillators, Crystal
6. Frequency Synthesizer

Copies of this document may be obtained upon request from:

Armed Services
Technical Information Agency
Arlington Hall Station
Attn: TIPCR
Arlington 12, Virginia

UNCLASSIFIED

AD ACCESSION NR

Instrumentation Department, U. S. Army Electronics Research and Development Activity, White Sands Missile Range, New Mexico

PRECISION SYNCHRONIZATION OF RADARS PHASE I, by Willis S. Parsons, Technical Report USA ERDA-21, 92 pp., incl. illus., May 1963.

UNCLASSIFIED Report

This report discusses a method of synchronizing radar systems by use of atomic oscillators. Synchronization will be accomplished by use of synchronized radars. The report discusses the laboratory analysis of the oscillators used.

UNCLASSIFIED

1. Multiradar Synchronization
2. Radar Pulses
3. Radar Ranging
4. Oscillators, Atomic
5. Oscillators, Crystal
6. Frequency Synthesizer

Copies of this document may be obtained upon request from:

Armed Services
Technical Information Agency
Arlington Hall Station
Attn: TIPCR
Arlington 12, Virginia

UNCLASSIFIED

AD ACCESSION NR

Instrumentation Department, U. S. Army Electronics Research and Development Activity, White Sands Missile Range, New Mexico

PRECISION SYNCHRONIZATION OF RADARS PHASE I, by Willis S. Parsons, Technical Report USA ERDA-21, 92 pp., incl. illus., May 1963.

UNCLASSIFIED Report

This report discusses a method of synchronizing radar systems by use of atomic oscillators. Synchronization will be accomplished by use of synchronized radars. The report discusses the laboratory analysis of the oscillators used.

UNCLASSIFIED

1. Multiradar Synchronization
2. Radar Pulses
3. Radar Ranging
4. Oscillators, Atomic
5. Oscillators, Crystal
6. Frequency Synthesizer

Copies of this document may be obtained upon request from:

Armed Services
Technical Information Agency
Arlington Hall Station
Attn: TIPCR
Arlington 12, Virginia

UNCLASSIFIED

AD ACCESSION NR

Instrumentation Department, U. S. Army Electronics Research and Development Activity, White Sands Missile Range, New Mexico

PRECISION SYNCHRONIZATION OF RADARS PHASE I, by Willis S. Parsons, Technical Report USA ERDA-21, 92 pp., incl. illus., May 1963.

UNCLASSIFIED Report

This report discusses a method of synchronizing radar systems by use of atomic oscillators. Synchronization will be accomplished by use of synchronized radars. The report discusses the laboratory analysis of the oscillators used.

UNCLASSIFIED

1. Multiradar Synchronization
2. Radar Pulses
3. Radar Ranging
4. Oscillators, Atomic
5. Oscillators, Crystal
6. Frequency Synthesizer

Copies of this document may be obtained upon request from:

Armed Services
Technical Information Agency
Arlington Hall Station
Attn: TIPCR
Arlington 12, Virginia

UNCLASSIFIED