AD-107 580

AD 107580

13000-6

TECHNICAL LIBRARY

USADACS Technical Library

5 0712 01013664 5

~~CONFIDENTIAL~~

TECHNICAL REPORT 2360

INVESTIGATION OF COMPOSITION B AND CYCLOTOL FOR USE IN 60 MM M49A2 HE SHELL

MARTIN J. MARGOLIN

CLARENCE D. HARTMAN

EXCLUDED FROM GENERAL DECLASSIFICATION SCHEDULE

SEPTEMBER 1956

Regraded Unclassified

By authority of DTIC (AD 107580)

Date 5 Jun 81

SAMUEL FELTMAN AMMUNITION LABORATORIES
PICATINNY ARSENAL
DOVER, N. J.

ORDNANCE PROJECT TA1-3501

DEPT. OF THE ARMY PROJECT 5A04-03-053

COPY 22

~~CONFIDENTIAL~~

REGRADING DATA CANNOT BE PREDETERMINED

OK 7/78

C5220

AD- 107580

SECURITY REMARKING REQUIREMENTS

DOD 5200.1-R, DEC 78

REVIEW ON 28 SEP 76

THIS REPORT HAS BEEN DELIMITED
AND CLEARED FOR PUBLIC RELEASE
UNDER DOD DIRECTIVE 5200.20 AND
NO RESTRICTIONS ARE IMPOSED UPON
ITS USE AND DISCLOSURE.

DISTRIBUTION STATEMENT A

APPROVED FOR PUBLIC RELEASE;
DISTRIBUTION UNLIMITED.

UNCLASSIFIED

AD 107580

CLASSIFICATION CHANGED
TO: UNCLASSIFIED
FROM: CONFIDENTIAL
AUTHORITY: ARRAD
ltr, 13 Feb

NOTICE: THIS DOCUMENT CONTAINS INFORMATION AFFECTING THE NATIONAL DEFENSE OF THE UNITED STATES WITHIN THE MEANING OF THE ESPIONAGE LAWS, TITLE 18, U.S.C., SECTIONS 793 and 794. THE TRANSMISSION OR THE REVELATION OF ITS CONTENTS IN ANY MANNER TO AN UNAUTHORIZED PERSON IS PROHIBITED BY LAW.

7/38

CONFIDENTIAL

DDC REPORT BIBLIOGRAPHY SEARCH CONTROL NO. BF035N

AD- 107 580 19/1 19/4
PICATINNY ARSENAL DOVER N J FELTMAN RESEARCH LABS

INVESTIGATION OF COMPOSITION B AND CYCLOTOL FOR USE IN 60MM M49A2 HE SHELL (C)

SEP 56 1V MARGOLIN,MARTIN J.;HARTMAN,CLARENCE D.;
REPT. NO. TR2360
PROJ: TA1 3501

EXCL. CONFIDENTIAL REPORT

DESCRIPTORS: *EXPLOSIVES, *FRAGMENTATION, HIGH EXPLOSIVE AMMUNITION, MATERIALS, MORTAR AMMUNITION, PROJECTILES, TESTS (M)
IDENTIFIERS: 60-MM ORDNANCE ITEMS, M-49 CARTRIDGES(60-MM) (M)

UNCLASSIFIED

DDC REPORT BIBLIOGRAPHY SEARCH CONTROL NO. BFK34D

AD- 107 580 19/1 19/4

PICATINNY ARSENAL DOVER N J FELTMAN RESEARCH LABS

Investigation of Composition B and Cyclotol for use in 60MM M49A2 HE Shell. (U)

SEP 56 16P MARGOLIN,MARTIN J.;HARTMAN,CLARENCE D.;

REPT. NO. TR2360

PROJ: TA1 3501

UNCLASSIFIED REPORT C-3928

DESCRIPTORS: *EXPLOSIVES, *FRAGMENTATION, HIGH EXPLOSIVE AMMUNITION, MATERIALS, MORTAR AMMUNITION, PROJECTILES, TESTS (U)

IDENTIFIERS: 60-MM ORDNANCE ITEMS, M-49 CARTRIDGES(60-MM) (U)

INVESTIGATION OF COMPOSITION B AND CYCLOTOL FOR USE IN 60 MM M49A2 HE SHELL (C)

by

Martin J. Margolin
Clarence D. Hartman

September 1956

Picatinny Arsenal
Dover, N. J.

This document contains information affecting the national defense of the United States within the meaning of the Espionage Laws, Title 18, U. S. C., Sections 793 and 794. The transmission or the revelation of its contents in any manner to an unauthorized person is prohibited by law.

Technical Report 2360

Project TA1-3501

Dept of the Army Project 5A04-03-053

Approved:

for Robert Joyce
D. R. BEEMAN
Acting Director
Samuel Feltman
Ammunition Laboratories

TABLE OF CONTENTS

	Page
Object	1
Summary	1
Conclusion	1
Recommendation	1
Introduction	2
Results	2
Discussion of Results	3
Experimental Procedure	4
Shell Assembly	4
Panel Recovery Test	5
References	5
Distribution List	15
Tables and Figures	
Table 1 Panel Penetration, Fragment Velocity, and Fragment Weight Distribution Results of 60 mm M49A2 HE Shell Loaded with Pressed Flake TNT, Composition B, and 75/25 Cyclotol	7
Fig 1 Metal Parts Shipping Assembly and Details of M49A2 60 mm HE Shell and M50A2 60 mm Practice Shell	10
Fig 2 Loading Assembly and Marking Diagram for M49A2 60 mm HE Shell	11
Fig 3 Assembly and Details of M52A2B1 Point Detonating Fuze	12
Fig 4 Fuze M52A2B1 Modified for Static Firing	13
Fig 5 Plan View of Panel Set-Up	14

OBJECT

To investigate the use of Composition B and cyclotol as the bursting charge in 60 mm M49A2 HE shell.

SUMMARY

In an attempt to improve the fragmentation efficiency of the 60 mm M49A2 HE shell (which is press-loaded with flake TNT), Picatinny Arsenal began an investigation of the use of cast Composition B and cyclotol as the bursting charge in this shell.

Panel recovery tests were conducted with nine M49A2 shell, three loaded with pressed TNT, three with cast Composition B, and three with cast cyclotol. From the results of these tests lethal areas at ground burst were calculated:

Angle of Elevation of Mortar	Lethal Area (sq ft) of M49A2 Shell Loaded with		
	TNT	Composition B	Cyclotol
45°	186	241	256
65°	352	456	488

The investigation was discontinued when production of the M49A2 shell was terminated.

CONCLUSION

Both Composition B and 75/25 cyclotol produce more effective fragmentation of the 60 mm M49A2 HE shell than pressed TNT. Cyclotol is slightly more effective than Composition B.

RECOMMENDATION

It is recommended that the use of Composition B and 75/25 cyclotol in other small fragmentation-type ammunition be investigated.

INTRODUCTION

1. Press-loaded flake TNT was standardized as the bursting charge for 60 mm M49A2 HE shell early in World War II. Because it was then believed that fragmentation in the smaller grain sizes was undesirable, cast TNT was considered too brisant for this shell. Recently, however, it has been recognized that more and smaller fragments of higher velocity provide greater lethality.

2. In 1954 Picatinny Arsenal was requested (Ref 1) to improve the loading of 60 mm M49A2 HE shell as a part of a comprehensive program to replace TNT with Composition B as the standard loading for all HE shell which would thereby be improved. An investigation was therefore started to determine the suitability of cast Composition B as the bursting charge in the M49A2 shell. Because cyclotol had been shown to be superior to Composition B in fragmentation ammunition (Ref 2), the use of cyclotol as the bursting charge for this shell was also investigated.

3. It was planned to conduct panel recovery, pit fragmentation, safety, and functioning tests of M49A2 shell loaded with pressed flake TNT, cast Composition B, and cast cyclotol. Because production of the M49A2 shell had been terminated, however, this investigation was discontinued (Ref 3) after only the panel recovery tests had been completed. This report covers the results of these tests.

RESULTS

4. Nine 60 mm M49A2 HE shell, three loaded with pressed flake TNT, three with cast Composition B, and three with cast cyclotol, were subjected to panel recovery tests. The results of these tests are given in Table 1 and may be summarized as follows:

	Bursting Charge		
	TNT	Comp B	Cyclotol
Avg no. of hits per shell	86	156	164
Avg no. of perforating hits per shell	35	59	68
Avg fragment velocity, ft/sec	3830	4700	5080
Avg wt of velocity fragments, grains	11.8	7.1	6.5
Avg no. of fragments larger than 1 grain	67	95	103
Avg wt of fragments larger than 1 grain	12.8	8.7	6.3

5. Lethal areas against prone men at ground burst for mortar elevations of 45° and 65°, calculated (Ref 4) from the results of the panel recovery tests, were as follows:

	Bursting Charge		
	TNT	Comp B	Cyclotol
Lethal Area at 45°, sq ft	186	241	256
Lethal Area at 65°, sq ft	352	456	488

DISCUSSION OF RESULTS

6. Both the panel penetration and fragment velocity test results agree with theoretical considerations. The results of the panel penetration tests show that both Composition B- and cyclotol-loaded shell produced nearly twice as many hits as shell press-loaded with flake TNT. Cyclotol-loaded shell produced 5% more hits than Composition B-loaded shell. Analysis of the fragment velocity results reveals that Composition B and cyclotol, respectively, produced 23 and 33% greater fragment velocity than TNT and showed a corresponding decrease in the size of the velocity fragments. Although velocities were recorded for only one TNT-and one Composition B-loaded shell, the fact that an increase in detonation rate of the bursting charge causes greater fragment velocities and increases the number of fragments further substantiates the results obtained.

7. Analysis of the fragment weight distribution data of Table 1 shows that shell loaded with either Composition B or cyclotol produced a larger number of fragments in the 1 to 25-grain size range than shell loaded with pressed TNT. Cyclotol produced a slightly larger number of fragments in this size range. No significant difference is apparent in the number of fragments larger than 25 grains produced by the different explosives. These results indicate that cyclotol is slightly more effective as the bursting charge for the subject shell than Composition B, which, in turn, is considerably more effective than pressed TNT.

8. The values for the lethal areas presented in paragraph 5 represent the cumulative effects of spatial distribution of fragments, fragment velocity, panel penetration, and the number and weight of recovered fragments. If we assume a terrain limitation at a radius of 14 feet at ground burst, the following average kill probabilities are obtained by dividing the appropriate lethal area by the area contained within the terrain limitation.

	Kill Probability		
Mortar Elevation	TNT	Composition B	Cyclotol
45°	.30	.39	.42
65°	.57	.74	.79

These values indicate the probability that a fatal wound will be inflicted on a prone human target within the terrain limitation. It is also seen that cyclotol is slightly more lethal than Composition B, which is considerably (about 30%) more lethal than TNT.

9. Because production of this shell has ceased and no further production is planned, further investigation of various explosives for use in this shell is not warranted. These results show, however, the improved fragmentation that can be gained by using cyclotol and Composition B in HE shell. Further studies of these explosives in other small fragmentation-type ammunition currently loaded with TNT should therefore be expedited.

EXPERIMENTAL PROCEDURE

Shell Assembly

10. Nine 60 mm M49A2 HE shell, Type A, (Fig 1) were loaded with TNT, Composition B, and 75/25 cyclotol described below:

a. Three shell were loaded with about 0.34 lb Grade I flake TNT (Spec JAN-T-248, 29 September 1955) pressed in two approximately equal increments. The first increment was pressed in two approximately equal increments. The first increment was pressed at 2000 psi with a 1.15-inch-diameter flat punch. The second increment was pressed to form the fuze cavity in accordance with Figure 2 at a pressure not exceeding 5000 psi with a 1.15-inch-diameter forming punch

b. Three shell were loaded with cast Grade A Composition B (Spec PA-PD-24, Rev 1, 13 August 1953) in one pour at 86°C ±1°. A thread-protecting funnel was used. The shell were filled to within one inch of the funnel top. The fuze cavity was drilled to the dimensions shown in Figure 2

c. Three shell were loaded with cast 75/25 cyclotol (Spec PA-PD-222, Rev 1, 31 July 1953) according to the procedure outlined in paragraph 10 (b) except that the pouring temperature was 90°C ±1°.

11. Nine M52A2B1 fuzes (Fig 3) were modified for static firing. The head assembly, booster cup with booster pellet, and booster lead cup with booster lead charge were removed. The body assembly was then disassembled and the axial hole diameter of the fuze body was increased by drilling to 0.290" + 0.010" to accomodate a Type II special blasting cap. The booster cup with booster pellet was then reassembled to the fuze body. A modified fuze, sealed with tape to exclude moisture, was assembled to each loaded shell.

Panel Recovery Test

12. The assembled shell were detonated in a horizontal position by a Type II special blasting cap which was inserted into the modified fuze (Fig 4) just before firing. Fragments were recovered from 10 celotex boxes arranged in a semicircle 14.8 feet from the shell firing position. A semicircular fence of 1-inch pine panels 9 feet in height and 30 feet from the shell firing position was used to obtain spatial distribution of fragments and panel perforation and penetration data. The fragment velocities were obtained by the use of two Fastax motion picture cameras operating at approximately 12,000 frames per second. Figure 5 shows a plan view of the panel recovery test set-up. Complete details of these tests are given in Reference 5.

REFERENCES

1. Letter from Office, Chief of Ordnance, to Picatinny Arsenal, 25 January 1954, ORDTA 00/4U0-3247, ORDBB 471.86/73-3, Subject: Explosive Loading of Shell, HE, 60 mm, M49A2

2. L. Jablansky, Evaluation of 70/30 Cyclotol and 75/25 Cyclotol for Use in HE and HEAT Projectiles, Picatinny Arsenal Technical Report 1944, 25 August 1953

3. Letter from Office, Chief of Ordnance, to Picatinny Arsenal, 8 June 1955, ORDTA 00/75U0 21895, ORDBB 471.86/7-23, Subject: Explosive Loading of Shell, HE, 60 mm, M49A2

4. Letter from Aberdeen Proving Ground to Picatinny Arsenal, 26 September 1955, ORDBG-BRL-W, ORDBB 471.86/7-51, Subject: Lethal Areas of Shell, HE, 60 mm M49A2 (U)

5. Yuma Test Station Firing Record No. 2024

TABLE 1

Panel Penetration, Fragment Velocity, and Fragment Weight Distribution Results of 60 mm M49A2 HE Shell Loaded with Pressed Flake TNT, Composition B, and 75/25 Cyclotol

		Panel Penetration*				Fragment Velocity**	
Round Number	Explosive Filler	Perforations	Penetrations	Total Hits	% Perf. of Total Hits	Avg Wt of Vel. Frag (Gr)	Average Velocity (ft/sec)
1	Pressed Flake TNT	26	34	60	43	--	Lost
2	Pressed Flake TNT	39	64	103	38	11.8	3,830
3	Pressed Flake TNT	41	55	96	43	--	Lost
4	Cast Composition B	65	83	148	44	--	Lost
5	Cast Composition B	54	83	137	39	7.1	4,700
6	Cast Composition B	59	126	185	32	--	Lost
7	Cast 75/25 Cyclotol	58	54	112	52	8.4	4,820
8	Cast 75/25 Cyclotol	84	130	214	39	5.2	5,310
9	Cast 75/25 Cyclotol	61	104	165	37	6.0	5,100
Avg.	Pressed Flake TNT	35	51	86	41	11.8	3,830
Avg.	Cast Composition B	59	97	156	38	7.1	4,700
Avg.	Cast 75/25 Cyclotol	68	96	164	41	6.5	5,080

*Panel Radius--30 feet
**Dist. to screen-14.8 ft.

TABLE 1 (Continued)

Fragment Weight Distribution*

Round Number	Less Than 1 Grain Wt. (Gr)	Less Than 1 Grain Number	1 - 25 Grains Wt. (Gr)	1 - 25 Grains Number	25 - 50 Grains Wt. (Gr)	25 - 50 Grains Number	50 - 75 Grains Wt. (Gr)	50 - 75 Grains Number
1	2	5	247	41	292	8	0	0
2	2.5	5	496	74	184	5	51	1
3	0	0	473	63	160	4	0	0
4	8	14	461	74	149	4	0	0
5	0.5	1	588	108	0	0	0	0
6	6.5	16	513	87	255	8	66	1
7	3.5	5	519	97	68	2	0	0
8	0	0	447	92	0	0	0	0
9	15.5	33	520	110	164	5	192	3
Avg.	2	3.3	405	59.3	212	5.7	17	0.3
Avg.	5	10.3	521	89.7	135	4	22	0.3
Avg.	6	12.7	495	99.7	77	2.3	64	1

*Fragments recovered in 10 Celotex boxes in a semicircle of 14.8-ft. radius. No fragments recovered above 750 grains.

TABLE 1 (continued)

Fragment Weight Distribution*

Round Number	75 - 150 Grains Wt. (Gr)	75 - 150 Grains Number	150-750 Grains Wt. (Gr)	150-750 Grains Number	Total Frags. Collected Above 1 Grain Wt. (Gr)	Total Frags. Collected Above 1 Grain Number	Avg. Frag. Wt.-Above 1 Gr.-(Gr/Frag)
1	96	1	221	1	856	51	16.8
2	0	0	0	0	731	80	9.1
3	80	1	154	1	867	69	12.6
4	116	1	0	0	726	79	9.2
5	0	0	0	0	588	108	5.4
6	307	3	0	0	1141	99	11.5
7	0	0	0	0	587	99	5.9
8	0	0	0	0	447	92	4.8
9	104	1	0	0	980	119	8.2
Avg.	59	0.7	125	0.7	818	67	12.8
Avg.	141	1.3	0	0	818	95	8.7
Avg.	35	0.3	0	0	671	103	6.3

*Fragments recovered in 10 Celotex Boxes in a semicircle of 14.8-ft radius. No fragments recovered above 750 grains.

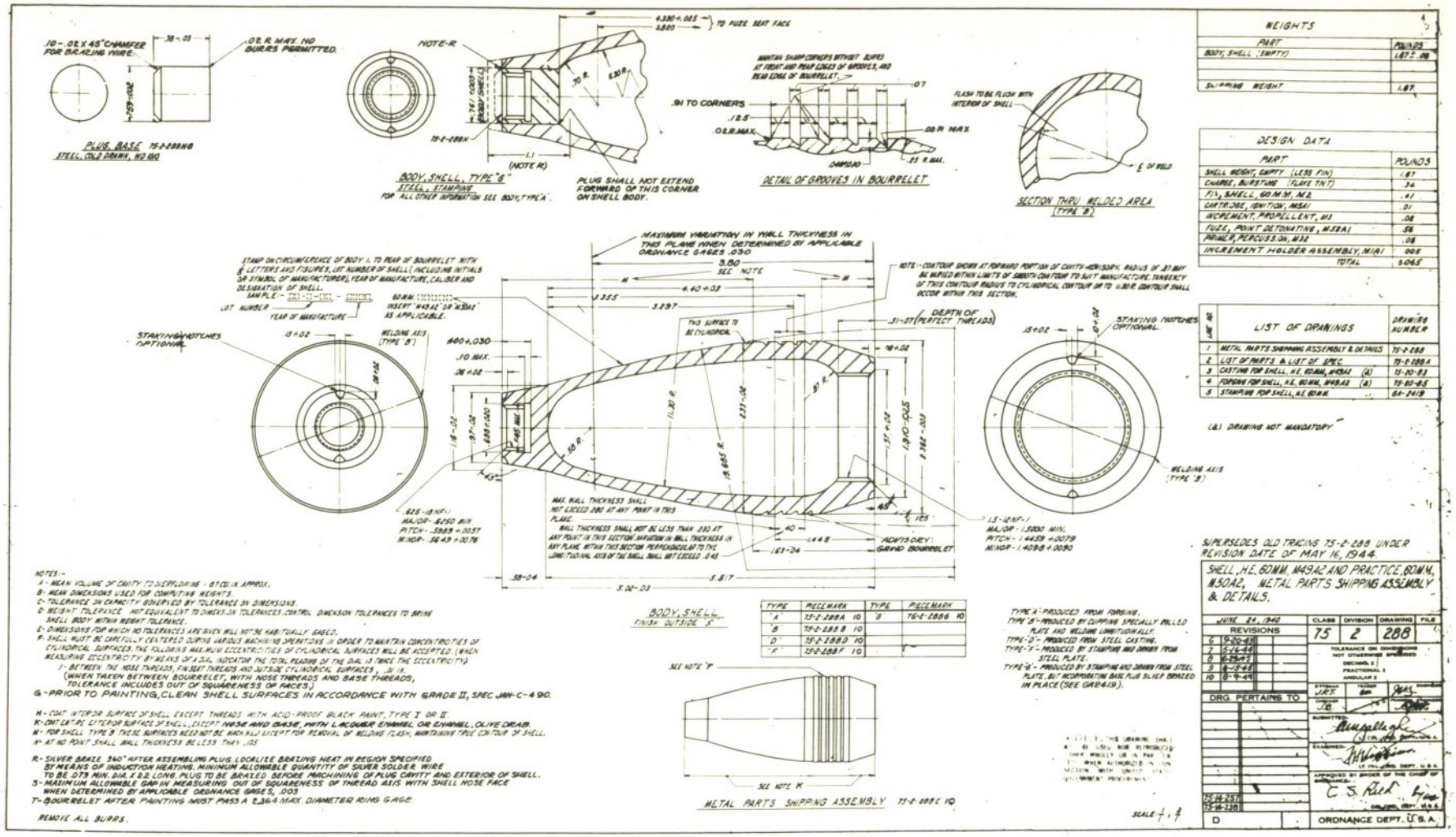

Fig 1 Metal Parts Shipping Assembly and Details of M49A2 60 mm HE Shell and M50A2 60 mm Practice Shell

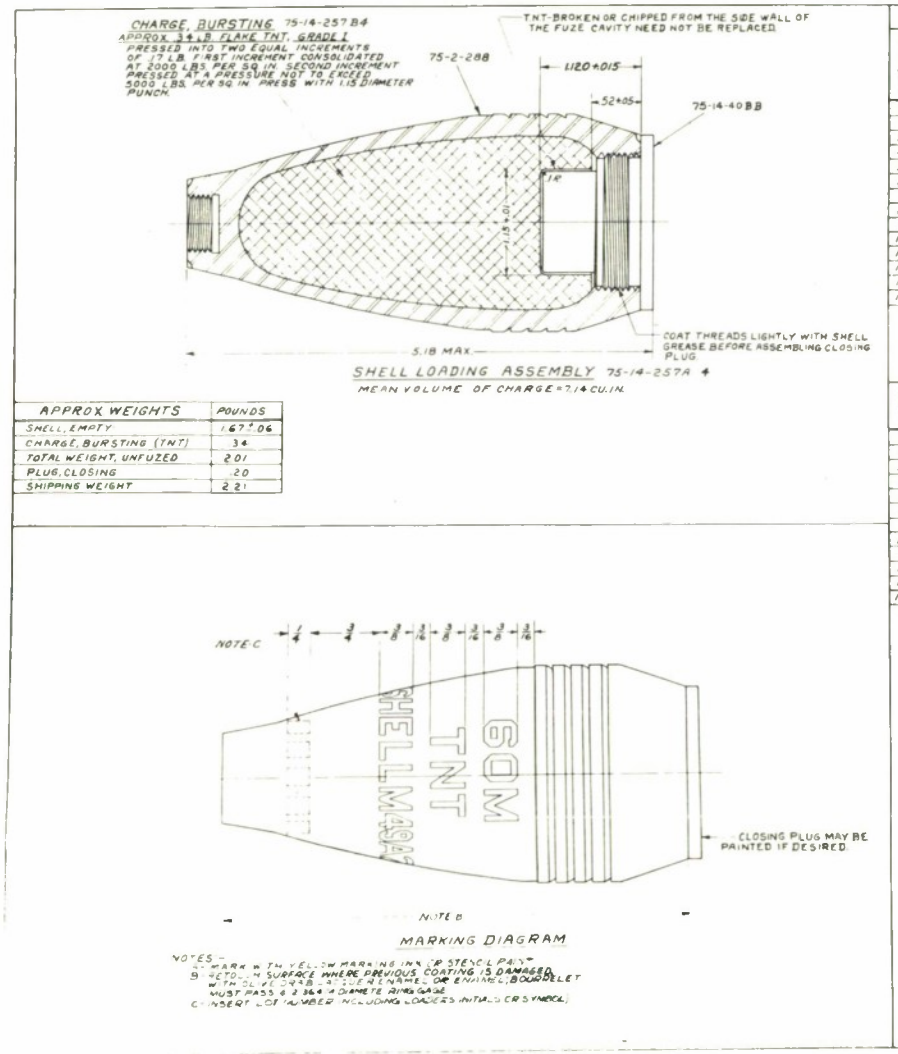

APPROX WEIGHTS	POUNDS
SHELL, EMPTY	1.67 ± .06
CHARGE, BURSTING (TNT)	.34
TOTAL WEIGHT, UNFUZED	2.01
PLUG, CLOSING	.20
SHIPPING WEIGHT	2.21

LIST OF PARTS

LINE NO	NAME OF PART	NUMBER REQUIRED EQUIPMENT	PIECE-MARK	MATERIAL: SIZE OR FORM	MATERIAL: KIND	MATERIAL: GRADE	MATERIAL: SPEC. NO.	APPROXIMATE UNIT WEIGHT (POUNDS)	APPROXIMATE GROSS WEIGHT PER STACK PER 1000 ASSEMBLIES	REMARKS
1	SHELL LOADING ASSEMBLY		75-14-257A				AXS-1466	2.21		
2	METAL PARTS ASSEMBLY	1	75-2-288					1.67		
3										
4										
5	CHARGE, BURSTING	1	75-14-257B	FLAKE	TRINITROTOLUENE	I	50-13-5	.34		
6										
7	PLUG, CLOSING	1	75-14-40BB				57-93-2	.20		(b)
8										
9										
10					INK, MARKING, YELLOW		36-2			(c)
11					LACQUER ENAMEL, OLIVE DRAB	I	3-162			(a)
12					GREASE, SHELL		50-11-37			
13										
14										

(a)-ALT.-ENAMEL, LUSTRELESS, OLIVE DRAB, GRADE I, SPEC 3-67
(b)-REQUIRED ONLY IN LOADED SHELL WHEN FUZE IS NOT ASSEMBLED IN SHELL IMMEDIATELY AFTER LOADING.
(c)-ALTERNATIVE PAINT, STENCIL, YELLOW, SPEC 3-179

LINE NO	LIST OF SPECIFICATIONS	SPEC. NUMBER •	REQUIRED BY
1	AMMUNITION, EXCERT SMALL ARMS AMM GENERAL SPEC FOR	50-0-1	DRG. 75-14-257
2			
3	SHELL, HE, M49, FOR 60MM MORTAR ASSEMBLING, MARKING & PACKING	AXS-1466	75-14-257A
4	INK, MARKING	36-2	DRG. 75-14-257
5	PAINT, STENCIL	3-179	DRG. 75-14-257
6	GREASE, SHELL	50-11-37	DRG. 75-14-257
7			
8	PAINTS AND RELATED MATERIALS, GENERAL SPECIFICATIONS FOR	3-1	3-67
9	ENAMEL, LUSTRELESS	3-67	DRG. 75-14-257
10	STANDARD SPECIFICATIONS FOR MARKING SHIPMENTS	100-2	DRG. 75-14-257
11	TRINITROTOLUENE (T.N.T.)	50-13-5	DRG. 75-14-257
12	LACQUER ENAMEL, LUSTRELESS	3-162	DRG. 75-14-257

• THE SPECIFICATION NUMBERS SHOWN ARE BASIC NUMBERS ONLY. WHEN A SPECIFICATION IS REVISED, A LETTER IS AFFIXED TO ITS BASIC NUMBER. SPECIFICATIONS REFERRED TO IN THESE SPECIFICATIONS AND NOT LISTED HEREON SHALL NOT APPLY.

LINE NO	LIST OF DRAWINGS	DRAWING NUMBER
1	SHELL LOADING ASSEMBLY	75-14-257
2	METAL PARTS ASSEMBLY	75-2-288
3	PLUG, CLOSING, FOR PROJECTILES	75-14-40
4		

SUPERSEDES OLD TRACING 75-14-257 UNDER REVISION DATE OF MAY 25, 1944

SHELL, H E, 60-M M, M 49 A2
LOADING ASSEMBLY AND MARKING DIAGRAM

JAN 21, 1941

REVISIONS	
1	8-7-41
2	6-14-44
3	5-25-44
4	8-13-45

CLASS	DIVISION	DRAWING	FILE
75	14	257	

TOLERANCE ON DIMENSIONS NOT OTHERWISE SPECIFIED
DECIMAL ±
FRACTIONAL ±
ANGULAR ±

DRG PERTAINS TO

RHW | EFL | 75-1-82

D

ORDNANCE DEPT U.S.A.

Fig 2 Loading Assembly and Marking Diagram for M49A2 60 mm HE Shell

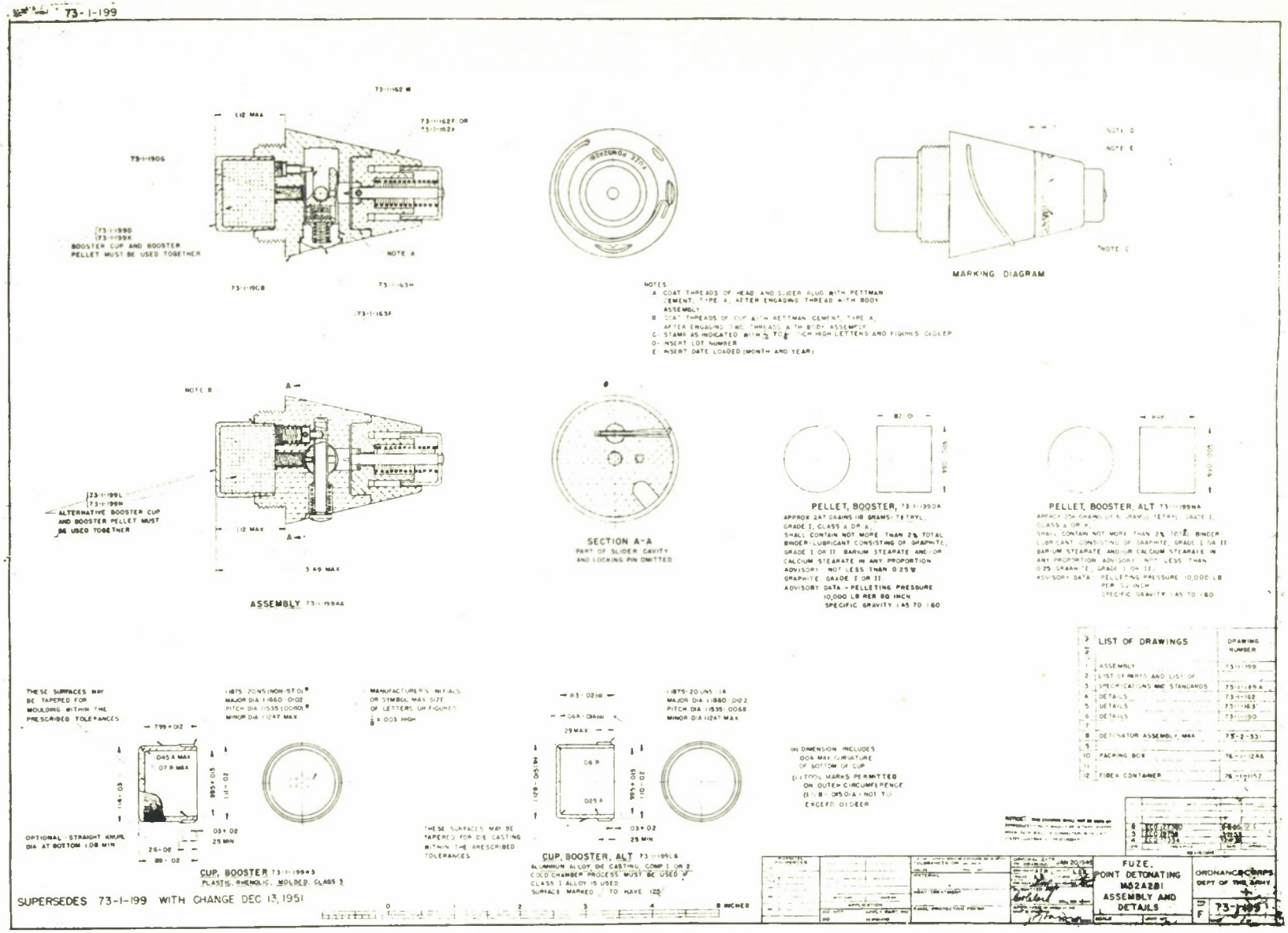

Fig 3 Assembly and Details of M52A2B1 Point Detonating Fuze

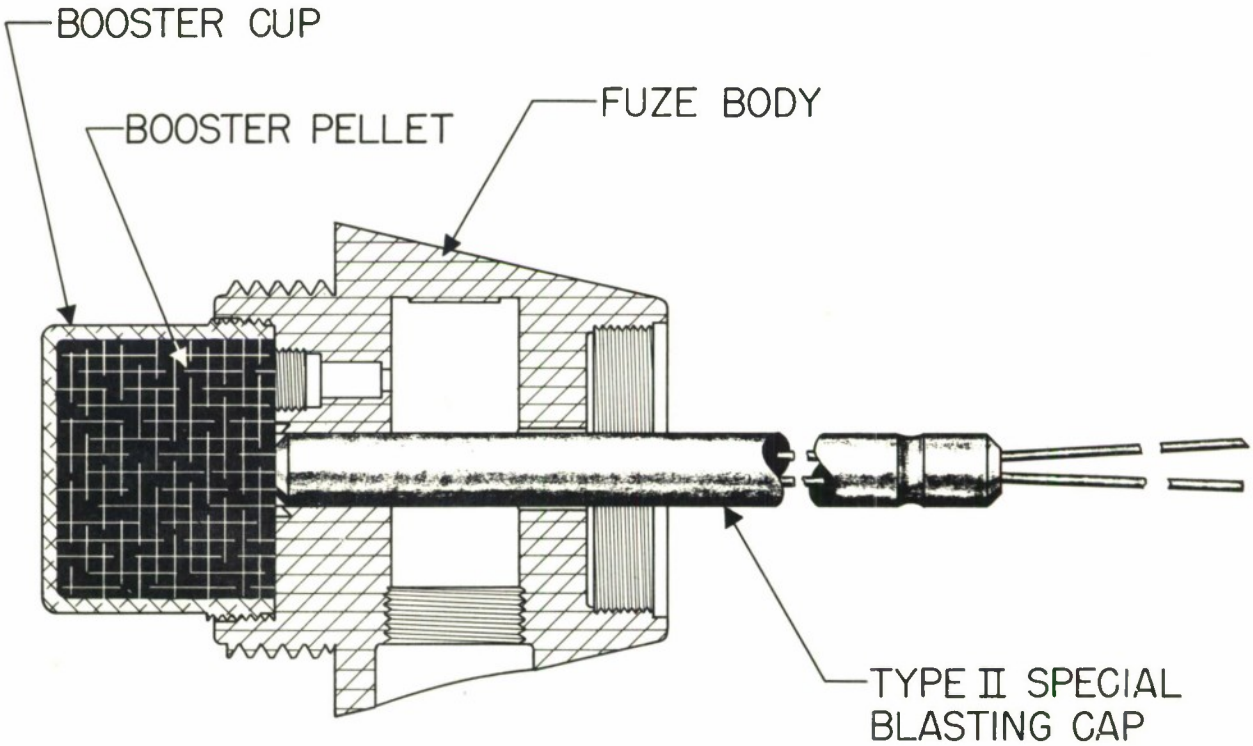

FUZE M52A2B1 MODIFIED FOR STATIC FIRING

Fig 4 Fuze M52A2B1 Modified for Static Firing

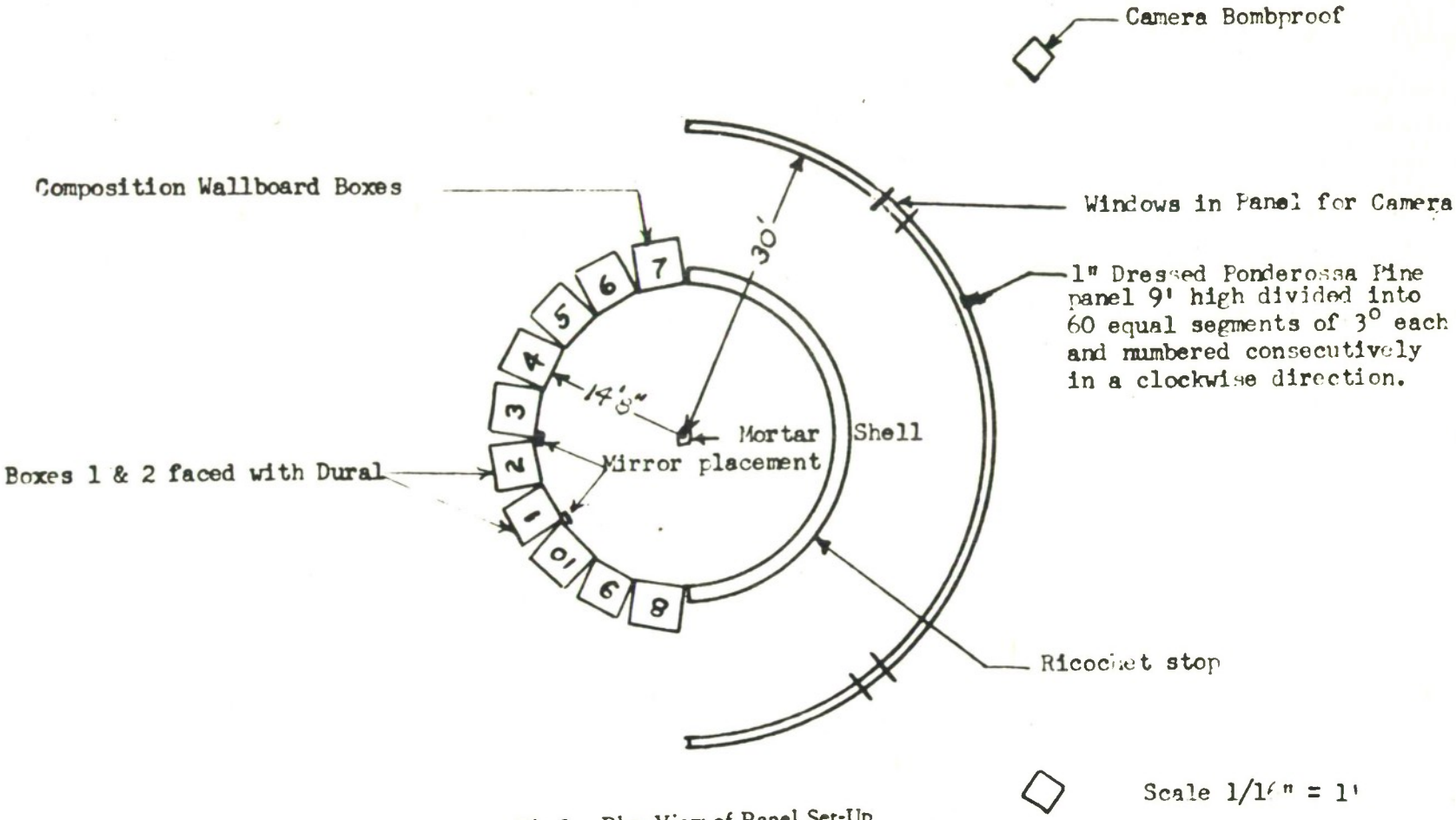

Fig 5 Plan View of Panel Set-Up

DISTRIBUTION LIST

	Copy No.
Commanding Officer Picatinny Arsenal Dover, New Jersey ATTN: Technical Information Section	1 - 5
Chief of Ordnance Dept of the Army Washington 25, D. C. ATTN: ORDTA-Mr. H. Rosenthal	6
ORDTB-Mr. M. C. Miller	7
ORDIM	8
ORDTX-AR	9
Armed Services Technical Information Agency Document Service Center Knott Building Dayton 2, Ohio ATTN: DSC-SD	10 - 19
Commanding General Aberdeen Proving Ground Maryland ATTN: Development and Proof Services	20
Ballistic Research Laboratories	21
Commanding General Ordnance Ammunition Command Joliet, Illinois ATTN: ORDLY-ARAC, Mr. E. G. Rapp	22
ORDLY-ARAT	23
Commanding Officer Jefferson Proving Ground Madison, Indiana	24

Commanding Officer
Holston Ordnance Works
Kingsport, Tennessee 25

Dept of the Navy
Bureau of Ordnance
Washington 25, D. C.
ATTN: ReV3a 26

Commander
Naval Ordnance Laboratory
Silver Spring, Maryland 27

Commander
U. S. Naval Ordnance Test Station
Inyokern, China Lake
California 28

Los Alamos Scientific Laboratory
Los Alamos
New Mexico 29

Commander
Naval Proving Ground
Dahlgren, Virginia 30

CONFIDENTIAL
REGRADING DATA CANNOT BE PREDETERMINED