US007441793B1

(12) **United States Patent**
Lim

(10) **Patent No.: US 7,441,793 B1**
(45) **Date of Patent: Oct. 28, 2008**

(54) **TOW HITCH LUNETTE ASSEMBLY**

(75) Inventor: **James G. Lim**, Macomb, MI (US)

(73) Assignee: **The United States of America as represented by the Secretary of the Army**, Washington, DC (US)

(*) Notice: Subject to any disclaimer, the term of this patent is extended or adjusted under 35 U.S.C. 154(b) by 402 days.

(21) Appl. No.: **11/340,008**

(22) Filed: **Jan. 17, 2006**

(51) **Int. Cl.**
B60D 1/01 (2006.01)

(52) **U.S. Cl.** **280/504**; 280/507; 280/511; 280/506; 280/515; 280/514

(58) **Field of Classification Search** 280/504, 280/507, 511, 506, 515, 514
See application file for complete search history.

(56) **References Cited**

U.S. PATENT DOCUMENTS

2,371,071	A	3/1945	Schonitzer	
2,483,111	A *	9/1949	Spillman	411/340
2,687,899	A *	8/1954	Bendtsen	280/504
4,052,085	A	10/1977	Rendessy	
4,111,449	A	9/1978	Hancock	
4,596,399	A	6/1986	Clark	
5,240,266	A	8/1993	Kelley et al.	
5,263,745	A *	11/1993	Storey	280/483
5,280,940	A	1/1994	Kendall	
5,551,539	A	9/1996	Frymiare	
5,620,198	A	4/1997	Borchers	
H1767	H	1/1999	Davis et al.	
6,027,134	A	2/2000	Hart et al.	
6,357,779	B1	3/2002	Mok et al.	
6,412,314	B1 *	7/2002	Jenks	70/14
6,416,073	B1 *	7/2002	Marcy	280/416.1
6,588,790	B2 *	7/2003	Hall	280/513
6,663,132	B1	12/2003	Kizy	
6,669,223	B2	12/2003	Sekaria et al.	
6,672,609	B2 *	1/2004	Pierman et al.	280/504
6,769,710	B1	8/2004	Lim	
6,820,889	B1	11/2004	Anderson	
6,834,879	B1	12/2004	Lorman	
6,908,094	B1	6/2005	Sellers	
6,908,097	B2	6/2005	Roberts	

(Continued)

Primary Examiner—Lesley D. Morris
Assistant Examiner—Marlon A Arce Diaz
(74) *Attorney, Agent, or Firm*—David L. Kuhn; Thomas W. Saur; Luis Miguel Acosta

(57) **ABSTRACT**

For use in a vehicular trailer hitch system, a vehicular trailer hitch lunette assembly is provided. The assembly includes at least one "U" shaped outer laminate plate having two legs with a semi-circular region therebetween, and at least one substantially flat inner laminate plate positioned between the legs of the U-shape of the outer laminate plate to provide support, stiffness, and additional mechanical strength to the assembly. The outer laminate plate and the inner laminate plate have cooperating apertures that are traversely positioned therethrough and the apertures are aligned and sized such that fasteners may be snugly inserted therein to mechanically couple the laminate plates together as a sandwich structure having first and second ends. The semi-circular region of the outer laminate plate and ends of the inner laminate plate comprise an inner void at the first end of the assembly to provide a lunette shaped structure to attach to a complimentary hitch assembly that is adapted to receive the lunette shaped structure, and the second end of the assembly is shaped to mate to a corresponding housing.

10 Claims, 3 Drawing Sheets

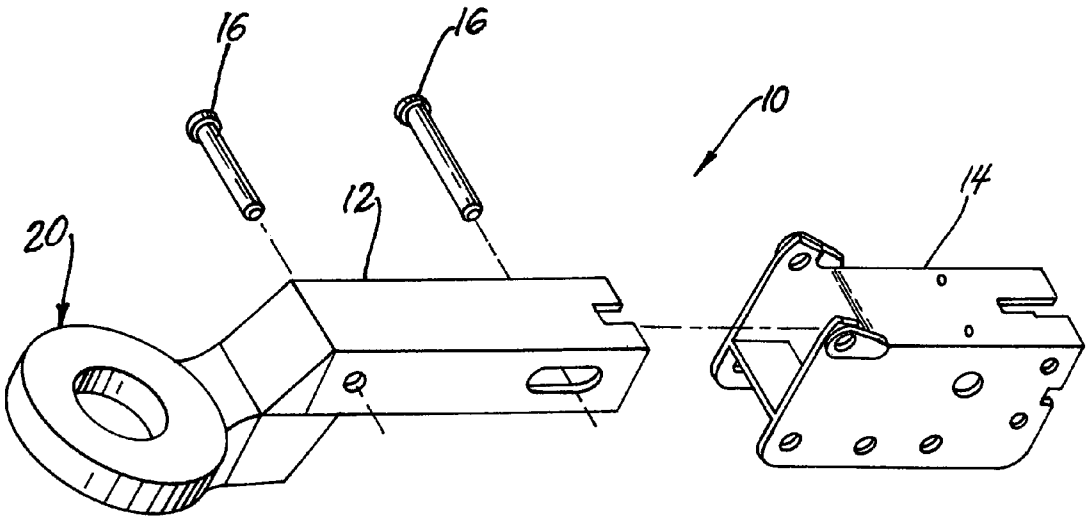

Report Documentation Page

Form Approved
OMB No. 0704-0188

Public reporting burden for the collection of information is estimated to average 1 hour per response, including the time for reviewing instructions, searching existing data sources, gathering and maintaining the data needed, and completing and reviewing the collection of information. Send comments regarding this burden estimate or any other aspect of this collection of information, including suggestions for reducing this burden, to Washington Headquarters Services, Directorate for Information Operations and Reports, 1215 Jefferson Davis Highway, Suite 1204, Arlington VA 22202-4302. Respondents should be aware that notwithstanding any other provision of law, no person shall be subject to a penalty for failing to comply with a collection of information if it does not display a currently valid OMB control number.

1. REPORT DATE **28 OCT 2008**	2. REPORT TYPE **N/A**	3. DATES COVERED **-**
4. TITLE AND SUBTITLE **Tow Hitch Lunette Assembly**		5a. CONTRACT NUMBER
		5b. GRANT NUMBER
		5c. PROGRAM ELEMENT NUMBER
6. AUTHOR(S) **James G. Lim**		5d. PROJECT NUMBER
		5e. TASK NUMBER
		5f. WORK UNIT NUMBER
7. PERFORMING ORGANIZATION NAME(S) AND ADDRESS(ES) **US Army RDECOM-TARDEC 6501 E 11 Mile Rd Warren, MI 48397-5000**		8. PERFORMING ORGANIZATION REPORT NUMBER **19493**
9. SPONSORING/MONITORING AGENCY NAME(S) AND ADDRESS(ES)		10. SPONSOR/MONITOR'S ACRONYM(S) **TACOM/TARDEC**
		11. SPONSOR/MONITOR'S REPORT NUMBER(S) **19493**
12. DISTRIBUTION/AVAILABILITY STATEMENT **Approved for public release, distribution unlimited**		
13. SUPPLEMENTARY NOTES **United States Patent US 7,441,793 B1**		
14. ABSTRACT		
15. SUBJECT TERMS		

16. SECURITY CLASSIFICATION OF:			17. LIMITATION OF ABSTRACT	18. NUMBER OF PAGES	19a. NAME OF RESPONSIBLE PERSON
a. REPORT **unclassified**	b. ABSTRACT **unclassified**	c. THIS PAGE **unclassified**	**UU**	**8**	

Standard Form 298 (Rev. 8-98)
Prescribed by ANSI Std Z39-18

U.S. PATENT DOCUMENTS

6,908,099 B2 6/2005 Andersen
6,910,705 B1 6/2005 Harwood et al.
6,938,912 B1 * 9/2005 Norton et al. 280/507
6,991,250 B2 * 1/2006 Lindsey et al. 280/651
D526,602 S * 8/2006 Sparkes D12/162
7,334,809 B2 * 2/2008 Coy 280/507
2004/0239073 A1 12/2004 Goettker
2005/0006874 A1 1/2005 Mrofka et al.
2005/0104325 A1 5/2005 Rodgers

* cited by examiner

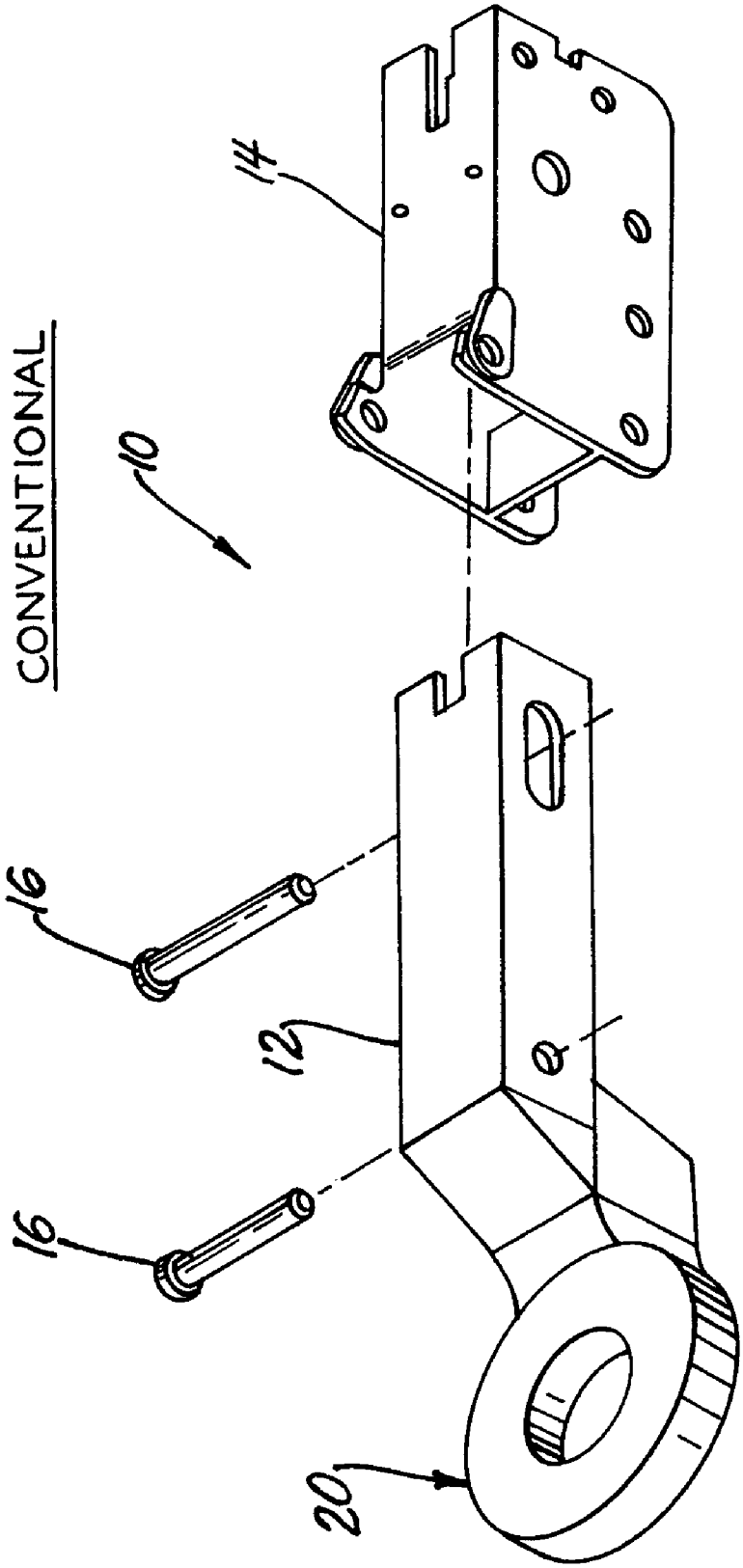

Fig. 1

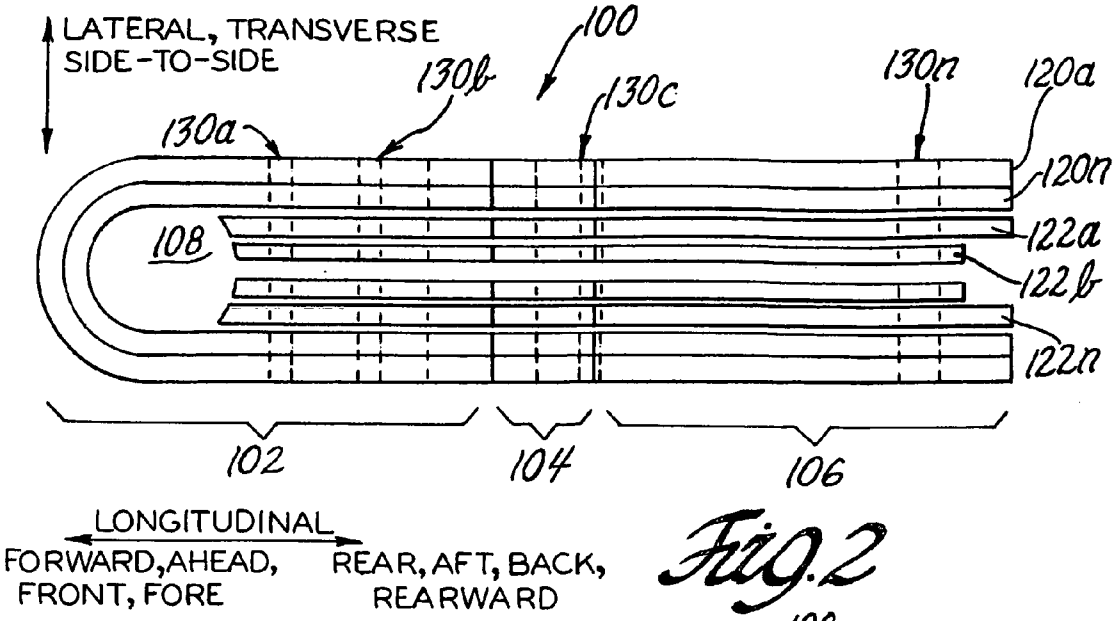

Fig. 2

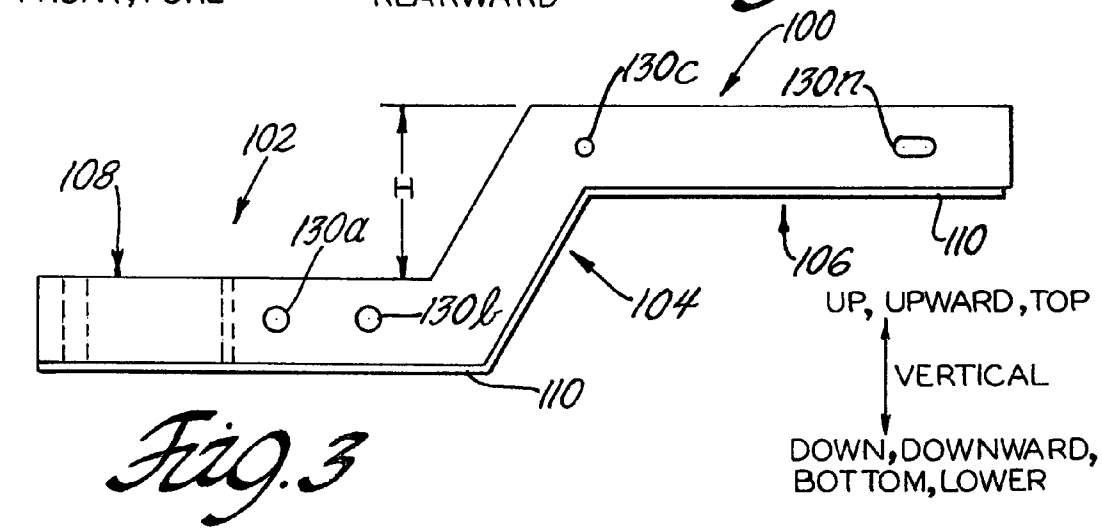

Fig. 3

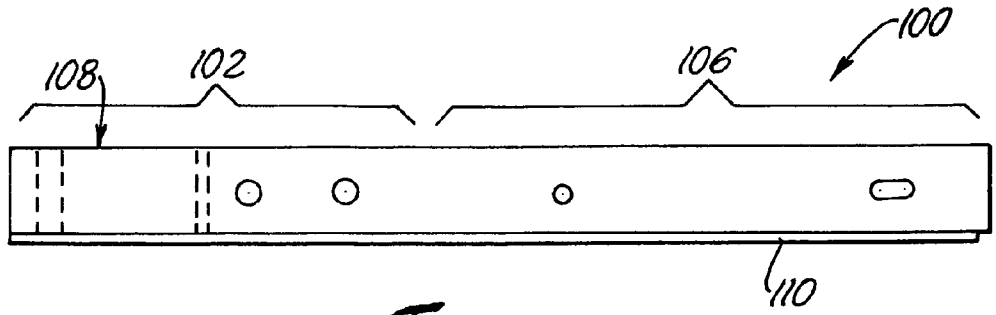

Fig. 4

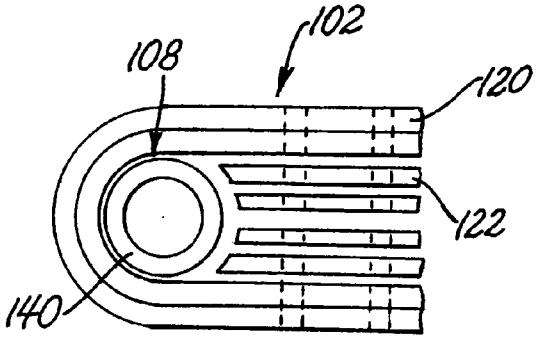

Fig.5A

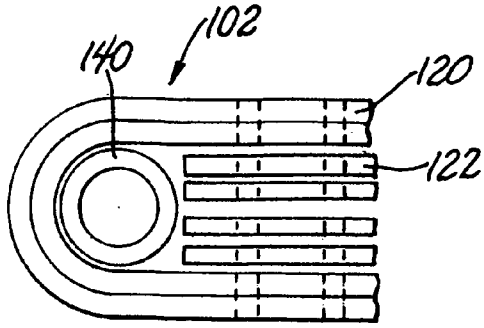

Fig.5B

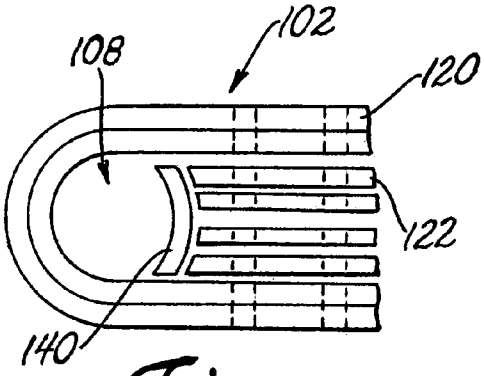

Fig.5C

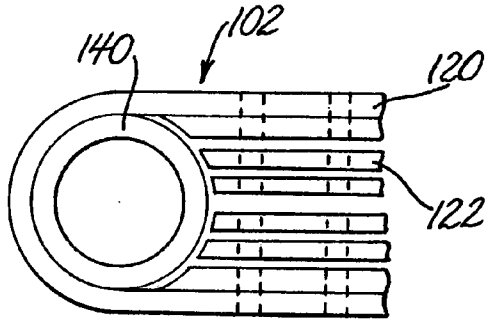

Fig.5D

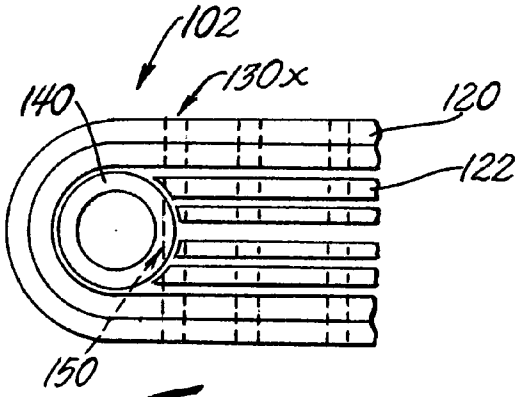

Fig.5E

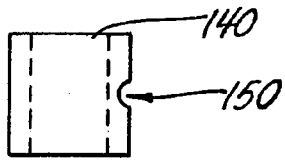

Fig.6

TOW HITCH LUNETTE ASSEMBLY

GOVERNMENT INTEREST

The invention described here may be made, used and licensed by and for the U.S. Government for governmental purposes without paying royalty to me.

BACKGROUND OF THE INVENTION

1. Field of the Invention

The present invention generally relates to a tow hitch lunette assembly.

2. Background Art

Tow hitch assemblies are generally implemented in connection with a tow vehicle such as a truck and a towed vehicle such as a trailer and the like. Trailers for construction equipment and other heavy-duty trailers often use a hitch assembly having a lunette eye trailer tongue to provide mechanical coupling between the tow vehicle and the towed vehicle. The lunette tongue can include a rigid, durable, hitch ring or "eye" having a toroidal (i.e., "donut" or lunette) shape. The eye can be placed over or secured to a vertical post or pin, or latched into a pintle, or the like on the tow vehicle.

Referring to FIG. **1**, an isometric perspective view of a conventional tow hitch assembly **10** is shown. The tow hitch assembly **10** generally includes a tow hitch lunette assembly **12** and a housing **14**. The tow hitch lunette assembly **12** is offset (i.e., "zig-zag", or "Z") shaped to provide proper interface height between a tow vehicle and a towed vehicle having unequal tow point heights.

The tow hitch lunette assembly **12** is generally sized and shaped to slidably fit snugly into the housing **14**. The housing **14** has apertures (holes) formed in respective side faces to provide for insertion of retention fasteners **16**. The tow hitch lunette assembly **12** is generally mechanically fastened to the housing **14** via a plurality of the through-bolt/nut or pin fasteners **16**. Additional components, assemblies, sub-assemblies, etc. such as electrical connectors, switches, surge dampers, and the like (not shown) may also be fastened to the housing **14** via respective holes using any appropriate fasteners (not shown). The tow hitch lunette assembly **12** is generally mechanically fastened to a tow vehicle hitch via an eye (or donut) portion **20**. The housing **14** is generally mechanically coupled to the towed vehicle.

To provide adequate strength in an offset configuration, conventional offset tow hitch lunette assemblies such as the assembly **12** are typically made of cast metal (e.g., iron, steel, etc.) that is processed by surface grinding, machining, and drilling. As such, the conventional tow hitch lunette assemblies such as the assembly **12** are heavy and costly to manufacture. In addition, the cast metal in the offset configuration may be prone to fatigue failure.

Thus, there exists a need and an opportunity for an improved tow hitch lunette assembly. Such an improved tow hitch lunette assembly may overcome one or more of the deficiencies of the conventional approaches.

SUMMARY OF THE INVENTION

Accordingly, the present invention may provide an improved tow hitch lunette assembly.

According to the present invention, for use in a vehicular trailer hitch system, a vehicular trailer hitch lunette assembly is provided. The assembly comprises at least one "U" shaped outer laminate plate having two legs with a semi-circular region therebetween, and at least one substantially flat inner laminate plate positioned between the legs of the U-shape of the outer laminate plate to provide support, stiffness, and additional mechanical strength to the assembly.

The outer laminate plate and the inner laminate plate have cooperating apertures that are traversely positioned therethrough and the apertures are aligned and sized such that fasteners may be snugly inserted therein to mechanically couple the laminate plates together as a sandwich structure having first and second ends.

The semi-circular region of the outer laminate plate and ends of the inner laminate plate comprise an inner void at the first end of the assembly to provide a lunette shaped structure to attach to a complimentary hitch assembly that is adapted to receive the lunette shaped structure, and the second end of the assembly is shaped to mate to a corresponding housing.

In one example, at least one of the outer laminate plate and the inner laminate plate is implemented using vanadium steel.

The assembly further comprises a wear plate that is fixed to a surface formed by one set of edges of the outer and inner laminate plates, and the wear plate includes a void accommodation aperture that is sized substantially the same as and is aligned with the void. The wear plate may be implemented using vanadium steel.

The assembly of claim further comprises a "Z" shaped offset to provide accommodation of height variation between a tow vehicle and a towed vehicle.

The second end of the assembly may be substantially rectangularly shaped.

In one example, the assembly further comprises a cylindrically shaped hollow lunette insert that is disposed and fastened within the void and has a respective cylindrical axis parallel to the cylindrical axis of the semi-circular region to provide additional strength and uniformity to the void. The lunette insert may be implemented using vanadium steel.

In one example, the lunette insert has a shaped recess formed in one face of the outer cylindrical surface, and the recess is shaped and positioned to cooperate with a matching one of the apertures to retain the lunette insert within the void.

In another example, the assembly further comprises an arcuate section of a hollow, cylindrically shaped member to form a lunette insert that is disposed and fastened within the void and has a respective cylindrical axis parallel to the cylindrical axis of the semi-circular region and attached to the ends of the inner laminate plates that form the rearward portion of the void to provide additional strength and uniformity to the void. The lunette insert may be implemented using vanadium steel.

The above features, and other features and advantages of the present invention are readily apparent from the following detailed descriptions thereof when taken in connection with the accompanying drawings.

BRIEF DESCRIPTION OF THE DRAWINGS

FIG. **1** is an isometric perspective diagram of a conventional tow hitch assembly;

FIG. **2** is a diagram of a top (plan) view of a tow hitch lunette assembly of an implementation of the present invention;

FIG. **3** is a diagram of a side (elevation) view of a tow hitch lunette assembly of an implementation of the present invention;

FIG. **4** is a diagram of a side (elevation) view of a tow hitch lunette assembly of an alternative implementation of the present invention;

FIGS. **5**(A-E) are diagrams of top (plan) views of tow hitch lunette assemblies of alternative implementations of the present invention; and

FIG. **6** is a side (elevation) view of an implementation of a lunette insert of the present invention.

DETAILED DESCRIPTION OF THE PREFERRED EMBODIMENT(S)

With reference to the Figures, the preferred embodiments of the present invention will now be described in detail. Generally, the present invention provides an improved system for a tow hitch lunette assembly for use in connection with a vehicular trailer tow hitch system. The tow hitch lunette assembly of the present invention may be implemented in connection with a tow (generally pull or push) vehicle such as a truck and a towed (generally pulled or pushed) vehicle such as a trailer, and the like. See, for example, U.S. Pat. No. 5,280,940 to Kendall, which is incorporated by reference in its entirety, as an example of the tow vehicle and the towed vehicle environment in which the present invention may be implemented.

Referring to FIGS. **2** and **3** in combination, diagrams illustrating a top view (FIG. **2**) and side view (FIG. **3**) of a vehicular trailer tow hitch lunette assembly **100** of the present invention are shown. The tow hitch lunette assembly (i.e., system, apparatus, device, etc.) **100** is generally implemented in connection with a vehicular trailer tow hitch system that includes a vehicular trailer tow hitch assembly housing or a towed vehicle drawbar. In one example, the tow hitch lunette assembly **100** may be advantageously implemented in connection with a vehicular trailer tow hitch assembly housing similar to the housing **14** of FIG. **1**. However, the tow hitch lunette assembly **100** may be implemented in connection with any appropriate tow hitch assembly, drawbar, component(s), sub-assembly(ies), system, sub-system(s), and the like to meet the design criteria of a particular application.

Relative directions (e.g., vertical, longitudinal, etc.) are generally as shown. Lateral (i.e., transverse, left-right, etc.) directions are generally perpendicular to the vertical-longitudinal plane.

In one example, the vehicular trailer hitch tow hitch lunette assembly **100** of the present invention may solve the problem of mismatched equipment hitch heights. The adapter **100** can be used with a trailer or other towed device which has an appropriate housing on the end of (i.e., mechanically coupled to) a towing tongue. The present invention may provide a robust and cost efficient solution for a tow hitch lunette assembly.

In one example, the assembly **100** comprises a laminated structure having a region (i.e., section, portion, etc.) **102** at a first end, a region **104**, and a region **106** at a second end. The regions **102**, **104** and **106** are generally adjacent (i.e., contiguous) portions of the structure **100**. In one example implementation, the section **102** may comprise the fore end of the assembly **100**, the section **106** may comprise the aft end of the assembly **106**, and the section **104** may comprise a center structure between the sections **102** and **106** at the first and second ends, respectively.

The section **102** is generally implemented as a lunette (i.e., eye) structure having a rounded end (i.e., a substantially semi-circular outer, e.g., foremost, end) that comprises an inner void (e.g., aperture, hole, opening, etc.) **108** such that lunette structure **100** may be used to attach a towed vehicle to a truck or other prime mover having a complimentary (i.e., matching) mounting assembly such as a pintle, boss and pin structure, and the like (not shown) that is generally adapted to receive and hold the lunette eye region **102** of the assembly **100**.

The section **104** is generally implemented as an offset (e.g., the offset, H) to provide accommodation of height variation between the tow vehicle and the towed vehicle. In one example, the offset, H, may be "zig-zag" or "Z" shaped. The amount of the offset, H, is generally selected (i.e., predetermined, chosen, etc.) to meet the design criteria of a particular application. In one example (e.g., as shown in FIG. **3**), the lunette assembly **100** may be implemented having a "dropped" section **102** via the offset **104** (i.e., the section **102** may be offset from the section **106** by the amount, H, in the downward direction). In another example (not shown), the lunette assembly **100** may be implemented having a "raised" section **102** via the offset **104** (i.e., the section **102** may be offset from the section **106** by the amount, H, in the upward direction).

The section **106** is generally shaped to mate (i.e., install) to a housing (e.g., a corresponding structure) on the vehicle that is to tow the desired piece of equipment, or alternatively, on the towed equipment. In one example (e.g., as shown in FIGS. **2** and **3**), the region **106** may be substantially rectangularly shaped. However, the region **106** may have any appropriate shape to interface with any appropriate housing assembly to meet the design criteria of a particular application.

The vehicular trailer tow hitch lunette assembly **100** generally comprises at least one outer laminate plate **120** (e.g., outer laminate plates **120***a*-**120***n*), and at least one inner laminate plate **122** (e.g., inner laminate plates **122***a*-**122***n*). The laminate plates **120** and **122** are generally assembled as a sandwich structure to form the lunette assembly **100**. The planar shaped portion of the laminate plates **120** and **122** are generally disposed (positioned) vertically. In one example (not shown), the edges of the laminate plates **120** and **122** may comprise top and bottom surfaces of the assembly **100**.

However, in another example (e.g., as shown in FIG. **3**), a "Z" shaped plate **110** may be fixed (e.g., fastened, welded, adhered, etc.) to the bottom edges of the laminate plates **120** and **122** to form a bottom surface of the assembly **100**. The bottom plate **110** may be implemented as a wear plate to reduce wear of the bottom the tow hitch lunette system **100**. The wear plate **110** generally includes a void accommodation aperture that is sized substantially the same as and is aligned with the void **108**.

The laminate plates **120** and **122** may have apertures (e.g., holes, slots, and the like) **130** that are traversely (laterally) positioned therethrough. In one example (e.g., holes **130***a* and **130***b*), the apertures **130** may be implemented to cooperate such that fasteners such as throughbolts, pins, or the like (not shown, similar to the bolts **16** as shown in FIG. **1**) may be installed (e.g., inserted) to hold together (i.e., mechanically couple) the laminate plates **120** and **122**.

In another example (e.g., the hole **130***c* and the slot **130***n*), the apertures **130** may be implemented and sized such that throughbolts or the like may be snugly installed to mechanically couple the laminate plates **120** and **122** and to cooperate with and mechanically couple the vehicular trailer tow hitch lunette assembly **100** in the mating hitch assembly housing (not shown). Common apertures **130** in the laminate plates **120** and **122** are generally aligned vertically and longitudinally to provide access for installation of the mechanical fasteners (e.g., throughbolts).

As illustrated in FIG. **2** (i.e., as viewed from the top), the laminate plates **120** are generally "U" shaped (i.e., "hairpin" shaped having two legs with a semi-circular region therebetween) to provide the semi-circular ("rounded") end of the section **102** and the outer lateral surfaces of the assembly **100**. The "U" shaped portion has a respective cylindrical axis. The semi-circular region of the outer laminate plates **120** and the forward ends of the inner laminate plates **122** comprise the inner void **108** at the first end of the assembly **100** to provide a lunette shaped structure to attach to a complimentary hitch assembly that is adapted to receive the lunette shaped structure **102**.

The laminate plates **122** are generally positioned between the legs of the U-shape of the plates **120**. The laminate plates **122** are generally singular, substantially flat plates that may be implemented to provide support, stiffness, and additional mechanical strength to the assembly **100**.

Referring to FIG. **4**, a diagram illustrating a side (elevation) view of an alternative implementation of the tow hitch lunette assembly **100** the present invention is shown. The apparatus **100** may be implemented without an offset section **104** such that the sections **102** and **106** are at substantially the same elevation. That is, the assembly **100** including the respective wear plate **110** when implemented may be substantially flat.

Referring to FIGS. **5**A-**5**E, diagrams illustrating top (plan) views of alternative examples of section **102** of the tow hitch lunette assembly **100** are shown. The apparatus **100** may further comprise a cylindrically shaped hollow lunette insert **140**. The insert **140** is generally disposed having a respective cylindrical axis vertical within the void **108** (i.e., parallel to the cylindrical axis of the semi-circular region of the outer laminate plate **120**). The insert **140** may provide additional structural strength and uniformity within the void region **108** of the "eye" section **102**. The hitch pin or pintle (not shown) that is implemented in connection with the present invention may be placed within the insert **140** to provide the desired mechanical coupling between the tow vehicle and the towed vehicle.

In one example (as shown, for example, in FIGS. **5**A, **5**B, **5**D, and **5**E), the lunette insert **140** may be implemented having a cylindrical shape. In one example (as shown, for example, in FIGS. **5**A, **5**D, and **5**E), the laminate plates **122** may be substantially adjacent to the insert **140**. In another example (as shown, for example, in FIG. **5**B), one or more of the laminate plates **122** may be disposed away from (i.e., not adjacent to) the insert **140**.

In another example (as shown, for example, in FIG. **5**C), the lunette insert **140** may be implemented as an arcuate section (or portion) of a hollow, cylindrically shaped member. The insert **140** as shown in FIG. **5**C may be attached to the ends of the laminate plates **122** that form the rearward portion of the void **108**.

In one example (as shown, for example, in FIGS. **5**A-**5**D), the insert **140** may be fastened (retained) inside the void **108** via welding or the like. In another example (e.g., as shown in FIGS. **5**E and **6**), the insert **140** may have a shaped recess **150** formed in one face of the outer cylindrical surface. The recess **150** is generally shaped and positioned to cooperate with a matching aperture **130** (e.g., aperture **130***x*) such that a pin, throughbolt, or the like may be implemented to snugly retain the insert **140** within the void **108**.

In one example, at least one of the laminate plates **120** and **122**, the bottom plate **110**, and the insert **140** may be implemented using vanadium steel (i.e., steel alloyed with vanadium for potential improvement in machinability, strength, hardness, and high-temperature stability). In one example, the vanadium steel may be an alloy comprising approximately 0.18 percent vanadium and about 1.00 percent chromium. When heat treated, the vanadium steel may have strength, toughness, and resistance to wear and fatigue which exceed that of conventional alloy steel. At least one grade of the vanadium steel in sheet form may be cold-formed into intricate shapes, folded, and flattened without breaking or exhibiting other failure modes. However, the laminate plates **120** and **122**, the bottom plate **110**, and the insert **140** are generally implemented using any appropriate materials to meet the design criteria of a particular application.

As is apparent then from the above detailed description, the present invention may provide an improved system for a tow hitch lunette assembly.

Various alterations and modifications will become apparent to those skilled in the art without departing from the scope and spirit of this invention and it is understood this invention is limited only by the following claims.

What is claimed is:

1. For use in a vehicular trailer hitch system, a vehicular trailer hitch lunette assembly, the assembly comprising:

at least one "U" shaped outer laminate plate having two legs with a semi-circular region therebetween;

at least one substantially flat inner laminate plate positioned between the legs of the U-shape of the outer laminate plate to provide support, stiffness, and additional mechanical strength to the assembly, wherein

the outer laminate plate and the inner laminate plate have cooperating apertures that are traversely positioned therethrough and the apertures are aligned and sized such that fasteners may be snugly inserted therein to mechanically couple the laminate plates together as a sandwich structure having first and second ends,

the semi-circular region of the outer laminate plate and ends of the inner laminate plate comprise an inner void at the first end of the assembly to provide a lunette shaped structure to attach to a complimentary hitch assembly that is adapted to receive the lunette shaped structure, and

the second end of the assembly is shaped to mate to a corresponding housing; and

a wear plate that is fixed to a surface formed by one set of edges of the outer and inner laminate plates, and the wear plate includes a void accommodation aperture that is sized substantially the same as and is aligned with the void.

2. The assembly of claim **1** further comprising a "Z" shaped offset to provide accommodation of height variation between a tow vehicle and a towed vehicle.

3. The assembly of claim **1** wherein the second end of the assembly is substantially rectangularly shaped.

4. The assembly of claim **1** further comprising a cylindrically shaped hollow lunette insert that is disposed and fastened within the void and having a respective cylindrical axis parallel to the cylindrical axis of the semi-circular region to provide additional strength and uniformity to the void.

5. The assembly of claim **4** wherein the lunette insert has a shaped recess formed in one face of the outer cylindrical surface, and the recess is shaped and positioned to cooperate with a matching one of the apertures to retain the lunette insert within the void.

6. The assembly of claim **1** further comprising an arcuate section of a hollow, cylindrically shaped member to form a lunette insert that is disposed and fastened within the void having a respective cylindrical axis parallel to the cylindrical axis of the semi-circular region and attached to the ends of the inner laminate plates that form the rearward portion of the void to provide additional strength and uniformity to the void.

7. The assembly of claim **1** wherein at least one of the outer laminate plate and the inner laminate plate is implemented using vanadium steel.

8. The assembly of claim **1** wherein the wear plate is implemented using vanadium steel.

9. The assembly of claim **4** wherein the lunette insert is implemented using vanadium steel.

10. The assembly of claim **6** wherein the lunette insert is implemented using vanadium steel.

* * * * *