NAVSEA
WARFARE CENTERS
NEWPORT

DEPARTMENT OF THE NAVY
NAVAL UNDERSEA WARFARE CENTER
DIVISION NEWPORT
OFFICE OF COUNSEL
PHONE: 401 832-3653
FAX: 401 832-4432
DSN: 432-3653

Navy Case No. 96674
Date: 10 October 2008

The below identified patent application is available for licensing. Requests for information should be addressed to:

TECHNOLOGY PARTNERSHIP ENTERPRISE OFFICE
NAVAL UNDERSEA WARFARE CENTER
1176 HOWELL ST.
CODE 07TP, BLDG. 990
NEWPORT, RI 02841

Serial Number 12/284,477

Filing Date 19 September 2008

Inventor Robert Kuklinski

Address any questions concerning this matter to the Office of Technology Transfer at (401) 832-1511.

DISTRIBUTION STATEMENT
Approved for Public Release
Distribution is unlimited

20081027289

Attorney Docket No. 96674

SUPERCAVITATING VEHICLE CONTROL

STATEMENT OF GOVERNMENT INTEREST

[0001] The invention described herein may be manufactured and used by or for the Government of the United States of America for governmental purposes without the payment of any royalties thereon or therefor.

CROSS REFERENCE TO OTHER PATENT APPLICATIONS

[0002] Not applicable.

BACKGROUND OF THE INVENTION

(1) Field of the Invention

[0003] The present invention relates to vehicle control systems and methods and more specifically to systems and methods for controlling a trajectory of a supercavitating vehicle.

(2) Description of the Prior Art

[0004] There exists a need for reducing drag in underwater vehicles, such as torpedoes, so as to enhance their speed, reliability and stealthy operation. For a nominally streamlined, fully wetted underwater vehicle, 80% of the overall drag is skin friction drag. The remaining drag is pressure or blockage drag.

[0005] Some investigations into reducing the drag of high-speed, underwater vehicles have focused attention on supercavitating underwater vehicles. For supercavitation, sufficient energy is put into the water to vaporize a given volume of water to form a cavity through which the object travels. When a vapor cavity completely encapsulates an underwater object, the process is referred to as supercavitation. Supercavitation allows for the higher speeds to be sustainable by reducing skin friction drag to a great extent at such higher speeds. The conditions for supercavitation are known in the art.

[0006] To obtain supercavitation, fluid may be accelerated over a sharp edge of the vehicle so that the pressure in the fluid drops below its vapor pressure after passing the edge. The component resulting in the pressure drop may be referred to herein as a cavitator. The cavitator, generally part of the nose shape of the object, is the only part of the object in constant contact with the water through which the vehicle travels.

[0007] However, if the speed of the vehicle is not sufficiently fast, the vapor cavity may collapse about the trailing portions of the vehicle. In such cases, artificial ventilation may be introduced into the cavity, which maintains the cavity beyond the trailing edge of the object.

[0008] In a ventilated cavity, i.e., one maintained by vaporous or artificial cavitation, the stability of the cavity interface can be maintained by insuring that the gas within the cavity is moving at same the speed as the vehicle. This reduces instabilities at the air-water

interface. As a result the vehicle within the cavity is surrounded by high speed ventilation gas.

[0009] For stability and control, current supercavitating vehicles rely on one or more tail fins extending radially from an aft portion of the vehicle. Stability is maintained by tail planing, whereby the tail fin is extended into the air-water interface of the cavity. Control surfaces on the tail fins control the vehicle trajectory.

[0010] However, the existing system of aft vehicle control produces considerable parasitic drag. In addition, such systems create continuous low frequency oscillations that result in intermittent banging of the tail surface on the air-water interface. The banging results in structural vibration, which increases the noise emanating from the vehicle and thereby decreases the overall stealth of the vehicle.

[0011] What is needed is a system for efficiently controlling a supercavitating vehicle. The system should provide an active damping mechanism such that a vehicle riding in an underwater supercavity needs not tail-plane. The system should reduce both the streamwise drag of the vehicle and the structural vibration induced by tail-planing, thus enhancing the stability of the vehicle, increasing its range and improving its stealth. In addition to stabilizing the vehicle in steady flight, the system should provide for quickly turning the vehicle as well.

SUMMARY OF THE INVENTION

[0012] It is therefore a general purpose and primary object of the present invention to provide systems and methods for controlling a supercavitating vehicle.

[0013] The object of the present invention is attained by providing a control system for a supercavitating vehicle comprising a set of wetted wings and a segmented ring wing extending from an aft portion of the vehicle. The wetted wings, which may be referred to herein as winglets, are supported by a strut attached to the vehicle. The angle of attack of each winglet is controlled by a winglet actuator. The winglet assembly may be extended into or retracted from the water by means of a spring-loaded actuated mount, which pivots the strut supporting the winglet. When fully retracted, the winglet assembly is contained completely within the cavity.

[0014] The segmented ring wing is controlled by one or more ring actuators. The dynamic effects of the ring wing may be neutralized by using the cavitator of the vehicle to globally enlarge the cavity and thus limit the flow over the ring wing. Alternately, or in combination, the ring actuator may be used to control the angle of attack of the ring wing. Thus, fine stabilization control is conducted by the wing ring and rapid maneuverability is obtained by the winglets.

[0015] In one embodiment, a system for controlling a trajectory of a supercavitating underwater vehicle, which forms a cavity about itself in underwater travel, comprises a winglet connected to the

vehicle. The winglet may be extendable into a flow of water surrounding the cavity and an angle of attack of the winglet may be adjustable to affect maneuverability of the vehicle. The system also comprises a segmented ring wing having at least two segments, each segment being separately extendable into the cavity. An angle of attack of each segment may be adjustable to affect stability of the vehicle within the cavity.

[0016] In one variation, a winglet strut may have a first end pivotally connected to the vehicle and the winglet may be pivotally connected to a distal end of the winglet strut. A winglet actuator may be connected to the winglet and the winglet strut. Operation of the winglet actuator may pivot the winglet about the distal end of the winglet strut to adjust the angle of attack of the winglet.

[0017] A strut actuator may be connected to the winglet strut and the vehicle. Operation of the strut actuator may pivot the winglet strut about the first end of the winglet strut to extend the winglet into the flow of water. The strut actuator may be biased to pivot the winglet strut about its first end to retract the winglet from the flow of water.

[0018] In another variation, ring struts each may have a first end connected to the vehicle and a distal end pivotally connected to one of the segments of the ring wing. Ring actuators each may be connected to one of the ring struts and a corresponding one of the segments. Operation of a ring actuator may pivot the corresponding

segment about the distal end of the ring strut to adjust the angle of attack of the corresponding segment in the cavity. Each ring actuator is biased to adjust the angle of attack of the corresponding segment to provide steady lift.

[0019] Each of the ring actuators is operable to retract the corresponding segment from the cavity toward the vehicle such that the segment is within the body diameter of the vehicle. Recesses on the vehicle may be shaped to accommodate the segments within the body diameter.

[0020] In another variation, a winglet strut may have a first end pivotally connected to the vehicle and the winglet may be pivotally connected to a distal end of the winglet strut. Ring struts each may have a first end connected to the vehicle and a distal end pivotally connected to one of the segments of the ring wing.

[0021] A winglet actuator may be connected to the winglet and the winglet strut such that operation of the winglet actuator may pivot the winglet about the distal end of the winglet strut to adjust the angle of attack of the winglet. Ring actuators each may be connected to one of the ring struts and a corresponding one of the segments such that operation of a ring actuator may pivot the corresponding segment about the distal end of the ring strut to adjust the angle of attack of the corresponding segment in the cavity.

[0022] A strut actuator may be connected to the winglet strut and the vehicle such that operation of the strut actuator may pivot the winglet strut about its first end so as to extend the winglet in the

flow of water. The strut actuator may be biased to pivot the winglet strut about its first end so as to retract the winglet from the flow of water.

[0023] Each of the ring actuators may be biased to adjust the angle of attack of the corresponding segment to provide steady lift; and each of the ring actuators may be operable to retract the corresponding segment from the cavity toward the vehicle such that the segment is within the body diameter of the vehicle. Recesses on the vehicle may be shaped to accommodate the segments within the body diameter of the vehicle.

BRIEF DESCRIPTION OF THE DRAWINGS

[0024] A more complete understanding of the invention and many of the attendant advantages thereto will be readily appreciated as the same becomes better understood by reference to the following detailed description when considered in conjunction with the accompanying drawings wherein:

[0025] **FIG. 1** shows a side view of an underwater, supercavitating vehicle with the control system of the present invention;

[0026] **FIG. 2** shows a partial cross-sectional view of a control surface taken at line **2-2** of **FIG. 1**; and

[0027] **FIG. 3** shows a cross-sectional view of an aft end of the vehicle taken at line **3-3** of **FIG. 1**.

DESCRIPTION OF THE INVENTION

[0028] Referring now to **FIG. 1**, there is shown a side view of underwater vehicle **10** traversing through a fluid medium **11**. For ease of reference, medium **11** is described herein as water. As is known in the art, water **11** is accelerated over a cavitator **12** attached to a nose portion **10a** of vehicle **10**. The downstream pressure drops below the vapor pressure of water **11** after passing cavitator **12**, resulting in the formation of cavity **13**, through which vehicle **10** traverses.

[0029] For stability and control of vehicle **10**, winglets **14** and segmented ring wing **16** extend from an aft portion **10b** of vehicle **10**. In the side view of **FIG. 1**, two winglets **14** and two segments **16a** of ring wing **16** are illustrated. However, those of skill in the art will recognize that the number of winglets **14** and segments **16a** can be varied, with the winglets **14** and segments **16a** being spaced equally about vehicle **10** for maintaining balance. Thus, for balance purposes but not for limitation, at least two winglets **14** and at least two segments **16a** may be provided. Preferably, four sets of winglets **14** and segments **16a** maintain balance, while providing an adequate level of control for vehicle **10**, as explained further herein. For ease of fabrication, each set of one winglet **14** and one segment **16a** preferably is aligned longitudinally, with winglet **14** being further aft than segment **16a**, though other arrangements of components are contemplated.

[0030] Each winglet **14** is supported by winglet strut **18**, which is pivotally attached to vehicle **10**. Both winglet **14** and winglet strut **18** may be hydrodynamically shaped to minimize drag. However, those of skill

in the art will recognize that the detailed shape (i.e., chord, span or thickness) of winglet **14** or winglet strut **18** will depend on the particular design conditions for vehicle **10**.

[0031] When extended away from vehicle **10** by means of pivoting winglet strut **18**, as shown in **FIG. 1**, winglet strut **18** extends through cavity **13** and winglet **14** extends into water **11**. The angle of attack of each winglet **14** with respect to the flow of water **11** is controlled by winglet actuator **20**. Strut actuator **22** pivots winglet strut **18** about its attachment point to vehicle **10**, as indicated by arrow **A**. Having winglets **14** extend into water **11** provides rapid maneuverability as the angle of attack of winglets **14** is controlled by actuators **20**.

[0032] Referring also to **FIG. 2**, there is shown a partial cross-sectional view of a segment **16a**, taken at line 2-2 of **FIG. 1**. Each segment **16a** of ring wing **16** is supported by ring strut **24**. As is the case for winglets **14** and winglet struts **16**, both segments **16a** and ring struts **24** may be hydrodynamically shaped to minimize drag; and those of skill in the art will recognize that their detailed shape (i.e., chord, span or thickness) will depend on the particular design conditions for vehicle **10**.

[0033] Ring struts **24** may be pivotally connected to segments **16a**, such that the angle of attack of segments **16a** into the flow through cavity **13** may be controlled by one or more ring actuators **26**. Ring actuators **26** may bias the angle of attack, such that segments **16a** provide a steady lift to carry the weight of vehicle **10** within cavity **13**.

Additionally, or in combination, the dynamic effects of ring wing **16** on the shape of cavity **13** may be diminished by using cavitator **12** to enlarge cavity **13** and thus limit the flow effects over ring wing **16**. Since segments **16a** only extend into cavity **13**, they have less influence on maneuverability than that afforded by winglets **14**. However, segments **16a** do provide the necessary fine stabilization control to reduce the tail banging associated with current supercavitating vehicles.

[0034] Generally, vehicle **10** will be launched underwater from a tube. To facilitate such a launch, both winglets **14** and ring wing **16**, together with their respective struts (**18** and **24**), may be retractable so that vehicle **10** may fit within the launching tube.

[0035] For winglets **14**, strut actuator **22** may be biased to retract winglet **14** and winglet strut **18**. For illustration in **FIG. 1**, and not limitation, winglet actuator **22** is biased by spring **28**. When retracted, as indicated in phantom (**14'**) in **FIG. 1**, winglet **14** and winglet strut **18** are contained within cavity **13**. Additionally, winglets **14** may retracted during periods of steady flight of vehicle **10**, i.e., during periods when rapid maneuvering is not required.

[0036] For segments **16a**, ring actuator(s) **26** may be used to retract segments **16a** and ring struts **24**. Alternately, or in combination, retraction actuator **30** may be provided to retract segments **16a** and ring struts **24**. Segments **16a**, when fully retracted, may be recessed into the body diameter of vehicle **10** to permit the tube launch of vehicle **10**. Those of skill in the art will recognize that the amount of recess is a function

of the mean thickness of cavity **13** at the axial location of ring wing **16**. Extending the thickness of cavity **13** in the location of ring wing **16** will increase the volumetric flow area within cavity **13**. As a result, the effectiveness of ring wing **16** in providing stabilization control will decrease. Thus, ring wing **16** may be operated in conjunction with cavitator **12** to produce a desirable cross-section for cavity **13** depending on the particular maneuver desired for vehicle **10**.

[0037] Referring to **FIG. 3**, there is illustrated a cross-sectional view of aft portion **10b** of vehicle **10** taken at line **3-3** of **FIG. 1**. In **FIG. 3**, actuators **26** and **30** are not shown for clarity. For illustration, but not for limitation, **FIG. 3** shows ring wing **16** having four segments **16a**, two of which are shown extended (labeled **e**) and two of which are shown retracted (labeled **r**). Also for illustration, but not for limitation, vehicle **10** includes recesses **32** into which segments **16a** may rest when fully retracted such that vehicle **10** may be tube launched, as discussed previously herein.

[0038] As shown in **FIG. 3**, segments **16a** are arcuate segments of ring wing **16**, having a centerpoint, **c**, coincident with that of vehicle **10**, when extended. The radius, **r**, of segments **16a** will depend on the extent to which segments **16a** extend into cavity **13**. The included angle, α, will depend on the number of segments **16a** and the extent to which segments **16a** will be separated when fully retracted. As illustrated in **FIG. 3**, α is such that segments **16a** do not overlap when retracted.

[0039] What has thus been described is a control system for a supercavitating underwater vehicle that provides enhanced stabilization control and more rapid maneuverability. A set of winglets extends through the cavity and into the water to provide for rapid maneuverability. A segmented ring wing operates within the cavity and provides for fine stabilization control. The angle of attack of the winglets and ring wing may be controlled by actuators. Each winglet is supported by a strut that is pivotally attached to the vehicle. The winglet assembly may be extended into the water or retracted to be completely within the cavity by means of a spring-loaded actuated mount, which pivots the strut about its attachment to the vehicle. The winglets and segmented ring wing may be retracted such that the vehicle may be tube launched.

[0040] Thus, the system not only provides maneuverability through the winglets, but the segmented ring wing controls the stability of the vehicle such that low frequency vehicle oscillations of the vehicle are minimized. By so doing, contact with the cavity boundary is avoided and structural vibrations are minimized. Separate controls for maneuverability and stability provide increased flexibility in controlling the flight path of the vehicle.

[0041] Obviously many modifications and variations of the present invention may become apparent in light of the above teachings. For example: the system may be mounted at various axial positions along the vehicle; the number of ring wing segments and winglets may be varied to

suit the geometry of a particular vehicle; and the detailed shape of the winglets, ring wing or support struts may be varied to suit. Further, the relative positions of the winglets and ring wing as well as the configuration of their support struts may be varied. Additionally, the fine stability control provided by the ring wing and the maneuverability provided by the winglets may be used independently.

[0042] It will be understood that many additional changes in details, materials, steps, and arrangements of parts which have been described herein and illustrated in order to explain the nature of the invention, may be made by those skilled in the art within the principle and scope of the invention as expressed in the appended claims.

Attorney Docket No. 96674

SUPERCAVITATING VEHICLE CONTROL

ABSTRACT OF THE DISCLOSURE

A control system for a supercavitating vehicle includes a set of winglets for rapid maneuverability and a segmented ring wing for fine stabilization control. The winglets and ring wing extend from an aft portion of the vehicle. The winglets are supported by a strut attached to the vehicle. The angle of attack of each winglet into the water adjacent the cavity is controlled by a winglet actuator. The winglet assembly may be extended into the water or retracted to be completely within the cavity by means of a spring-loaded actuated mount. The segmented ring wing is controlled by a ring actuator. The ring actuator may be used to control the angle of attack of the ring wing. Alternately, or in combination, the flow over the ring wing may be neutralized by using the cavitator of the vehicle to globally enlarge the cavity and thus limit the flow.

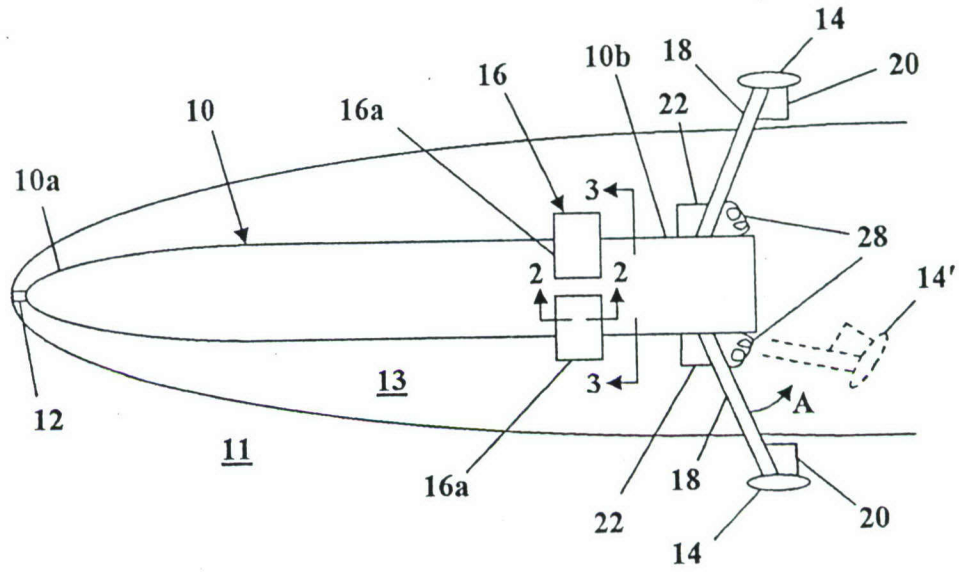
14
20
18
10b
16
22
10
16a
10a
3
28
2
2
14′
13
3
A
12
11
16a
18
22
20
14

FIG. 1

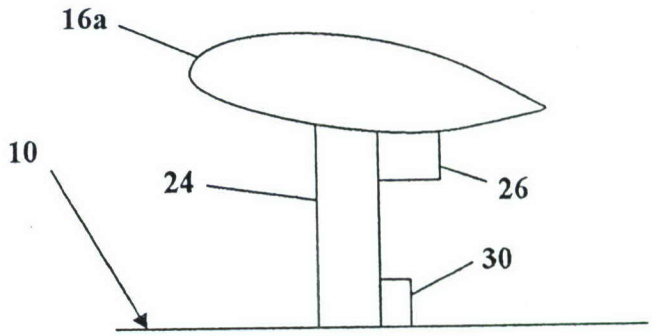
16a
10
24
26
30

FIG. 2

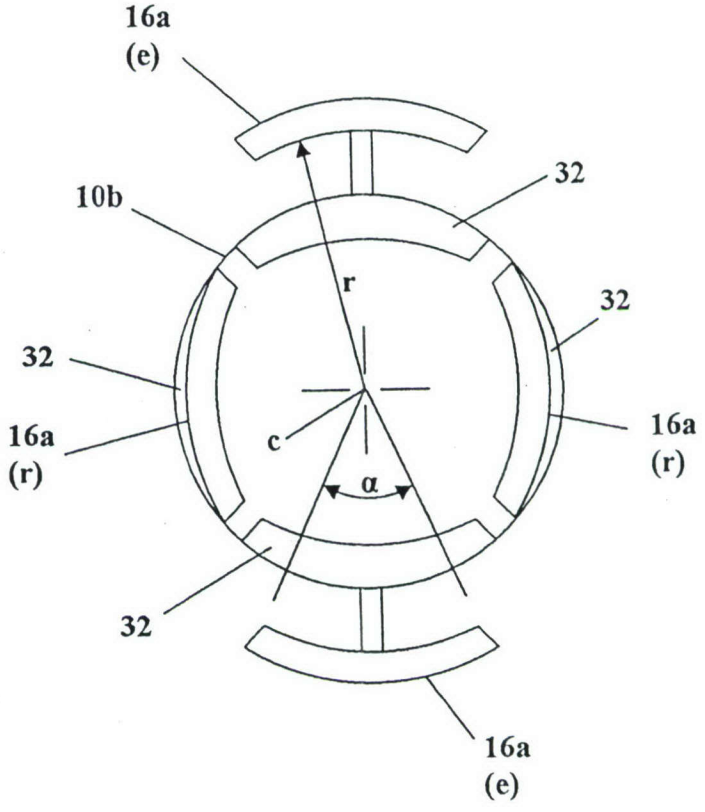

FIG. 3