NAVSEA
WARFARE CENTERS
NEWPORT

DEPARTMENT OF THE NAVY
NAVAL UNDERSEA WARFARE CENTER
DIVISION NEWPORT
OFFICE OF COUNSEL
PHONE: (401) 832-3653 FAX: (401) 832-4432
DSN: 432-3653

Attorney Docket No. 84474
Date: 9 July 2007

The below identified patent application is available for licensing. Requests for information should be addressed to:

PATENT COUNSEL
NAVAL UNDERSEA WARFARE CENTER
1176 HOWELL ST.
CODE 00OC, BLDG. 11
NEWPORT, RI 02841

Serial Number	11/772,864
Filing Date	3 July 2007
Inventor	Paul Medeiros

If you have any questions please contact James M. Kasischke, Supervisory Patent Counsel, at 401-832-4230.

DISTRIBUTION STATEMENT
Approved for Public Release
Distribution is unlimited

INDUCTIVE COUPLING METHOD FOR REMOTE POWERING OF SENSORS

STATEMENT OF GOVERNMENT INTEREST

[0001] The invention described herein may be manufactured and used by or for the Government of the United States of America for governmental purposes without the payment of any royalties thereon or therefore.

CROSS REFERENCE TO OTHER PATENT APPLICATIONS

[0002] Not applicable.

BACKGROUND

(1) Field of the Invention

[0003] The methods and systems described herein relate to remote powering of sensors, and more particularly to methods and systems for delivering power to a number of remote sensors utilizing inductive coupling between a planar primary coil and a plurality of sensor coils.

(2) Description of the Prior Art

[0004] Submarines and other vessels utilize large sensor arrays for detection of acoustic energy within the surrounding water. For proper sensing and detection, the arrays or grids of sensors are mounted on the external side of the hulls of the

vessels. The sensors are embedded in an acoustic polymer material and are generally several inches above the hull. Current on-hull sensor arrays are powered from the interior of the vessel. Power connections to the inboard side of a vessel typically include large, heavy and expensive wiring harnesses.

[0005] The wiring harnesses can add significant weight to the vessel and each power connection from the harness to a sensor requires a penetration through the hull. The wiring harnesses and penetrations can add significantly to the costs of the vessel. Additionally, each penetration provides a source of possible leakage and may decrease the overall structural integrity of the hull.

[0006] What are therefore needed are methods and systems for delivering power to the sensors without the use of wired connections. Such methods and systems may save significant amounts of weight and costs in overall acoustic detection array systems by reducing or removing large, heavy cable harnesses currently used to deliver power to the outboard sensors. Reliability may also be improved by not requiring a physical connection through the hull in order for a sensor to receive power.

[0007] One such method would involve the use of coils and inductive coupling to power sensors. In the prior art there are examples of the use of this technology on a very limited scale.

U.S. Pat. No. 6,535,133 to Gohara et al, for "Vehicle slide door power supply apparatus and method of supplying power to vehicle slide door" (issued March 18, 2003) teaches a power supply apparatus for supplying electric power from a vehicle body to a slide door slidable mounted on the vehicle body of a vehicle, the power supply apparatus comprising a primary coil provided to the vehicle body; a secondary coil provided to the slide door, wherein the primary and secondary coils can be brought into proximity to each other upon closing of the slide door to effect a mutual induction operation so as to supply the electric power; a temperature sensor provided in a vicinity of the primary coil; a primary coil control device which is connected to the temperature sensor, and stops excitation of the primary coil in accordance with the temperature of the primary coil or the vicinity of the primary coil detected by the temperature sensor, so as to interrupt a supply of the electric power to the slide door; a slide door-contained battery for supplying electric power to a load driver driving and controlling at least one load on the slide door at least when the slide door is opened or when the supply of the electric power to the slide door is interrupted; and charging means for charging the slide door-contained battery with the electric power supplied to the slide door through the secondary coil.

[0008] U.S. Patent 6,535,133 is a very relevant example of prior art in that it discloses a method for using two very closely spaced coils of approximately equal size for power delivery over the short gap that exists in a closed automotive sliding door. The invention requires the two coils to be very close together in order to operate. In addition, it is merely a one-to-one power delivery method and is used to keep a door-mounted battery charged.

[0009] What is needed is an inductive coupling method on a much larger scale that can employ a single large planar primary coil inductively coupling electrical energy to a number of smaller co-planar sensor coils above it, where the distance between the plane of the primary coil and the plane of the sensor coils remains constant.

SUMMARY OF THE INVENTION

[0010] It is a general purpose and object to provide methods and means of delivering power to a number of remote sensors that do not require a physical connection between the source of power and the sensors. A further object is to reduce costs and weight by replacing large, heavy, cable harnesses currently used for delivering power. A still further object is to improve reliability and structural integrity by eliminating through-hull physical connections for on-hull sensor grids.

[0011] These objects are accomplished by providing means and methods utilizing inductive coupling between a powered primary coil and a plurality of sensor coils to bias the active circuitry of the sensors. In some embodiments, the primary coil may be a wire coil. In other embodiments, the primary coil may be a planar coil pattern etched onto a printed circuit board.

[0012] In one embodiment, a system for remotely powering sensors includes a primary coil connected to a power source, a plurality of sensor coils spaced apart from the primary coil, and sensor circuitry at each one of the plurality of sensor coils, which together with the sensor coil form a sensor unit, wherein a current in the primary coil inductively couples to the plurality of sensor coils to induce a corresponding current in each one of the plurality of sensor coils such that the current activates the sensor circuitry to power each sensor unit.

[0013] The primary coil is adapted for mounting on the exterior side of a closed vessel hull as are the sensor coils. The primary coil must be on the same side of the hull as the sensors. Otherwise, the hull will shield the sensor coils from the magnetic field produced y the primary soil. The primary coil must not be in contact with the hull. The sensor units may be disposed between a first acoustic layer exteriorly adjacent the vessel hull and a second acoustic layer disposed exteriorly to the first acoustic layer. The first acoustic layer is

referred to as the inner layer and is bonded to the hull with a polymer adhesive. The second acoustic layer is referred to as the outer layer and is bonded to the inner layer. The primary coil and/or the sensor coils can be formed of a planar coil of wire, or may be etched onto a printed circuit board. The separation between the primary coil and the sensor coils may be as much as several inches. There is no minimum spacing requirement.

[0014] In one aspect, the method includes forming the primary coil and/or the sensor coils from a coil of wire, or etching at least one of the primary coil and the sensor coils unto a printed circuit board.

BRIEF DESCRIPTION OF THE DRAWINGS

[0015] A more complete understanding of the methods and systems and many of the attendant advantages thereto will be readily appreciated as the same becomes better understood by reference to the following detailed description when considered in conjunction with the accompanying drawings wherein:

[0016] FIG. 1 shows a schematic diagram of a remote powering system;

[0017] FIG. 2 shows a plot of system performance for equally sized coils;

[0018] FIG. 3 shows a plot of mutual and self inductance for equally sized coils; and

[0019] FIG. 4 shows a plot of mutual inductance for two coils of different sizes.

DESCRIPTION OF THE PREFERRED EMBODIMENT

[0020] Referring to FIG. 1, there is shown a schematic diagram of a system 10 for remote powering of sensors 12. For purposes of illustration and without limitation, system 10 is described herein with relation to remote sensors mounted on an exterior surface of a closed vessel hull 1. However, it can be understood that system 10 can be applicable to other configurations where multiple sensors are to be powered without having a direct power connection thereto. For the embodiment shown in FIG. 1, sensors 12 are embedded between two layers (14, 16) of acoustic polymer material, denoted as the inner layer 14 and outer layers 16. The inner acoustic polymer layer 14 is bonded to the hull with a bonding layer of adhesive 13 disposed over the exterior of the closed vessel hull 1. Each of the sensors 12 includes a pickup coil 12a consisting of a number of turns of wire and sensor circuitry 12b electrically connected to pickup coil 12a. Each of the sensors 12 are coplanar in a single plane that serves as an isolated sensing layer of a multi-sensor arrangement.

[0021] Planar power coil 18 consists of a number of turns of wire 18a. The plane of planar power coil 18 is parallel to the plane of the sensors 12. In a preferred embodiment, planar power coil 18 is larger than the pickup coils 12a by at least a 5:1 ratio of diameter, but the invention is not limited to such a ration as such. Planar power coil 18 is a fixed distance from the pick up coils 12a on an order of several inches. Power source 20 provides power to power coil 18 through connecting wires 22. For purposes of illustration, in keeping with the exemplary closed vessel hull configuration and without limitation, the primary power coil 18 is adapted for mounting on the exterior side of a closed vessel hull. The power coil 18 must be on the same side of the hull as the sensors 12. Otherwise, the hull will shield the sensor coils 12a from the magnetic field produced y the power coil 18. The power coil 18 must not be in electrical contact with the hull and is preferably located between the inner layer 14 and the hull. The connecting wires 22 carry an AC current at a frequency somewhere in the range of 100-500 kHz from power source 20 to power coil 18. The system 10 operates in a continuous wave mode.

[0022] As is known in the art, running a current of electricity in a wire coil such as power coil 18 produces a magnetic field that, near the center 18b of the power coil 18, is normal to the plane of power coil 18. The magnetic field

induces an AC current to flow in each of the pickup coils 12a that are present at each sensor 12 location. The AC current is then rectified using standard circuit components of sensor circuitry 12b, e.g., diodes, capacitors and the like, and is made available as DC power for sensor 12 to operate.

[0023] FIG. 2 is a graph of calculations performed to determine the performance of such a system for the simple case of equally sized pickup and power coils. As illustrated thereon, a reasonable amount of power transfer can be realized. In FIG. 2, the power transfer ratio is shown in decibels for two example coil diameters, *a*. For the case shown in FIG. 2, the calculations were performed using #22 AWG wire for power coil 18 and pickup coil 12a.

[0024] One key parameter to be considered using inductive coupling is the mutual inductance between the feed or power coil 18 and pickup coils 12a. As a starting point, consider two identical circular filamentary coils of N turns each, one located in the *z=0* plane, the other in the *z=h* plane, i.e., the coils lie in two parallel planes a distance *h* apart. The mutual inductance between two arbitrary current-carrying bodies can be found from equation [1]:

$$M = \frac{\mu_0}{4\pi} \iint_{VV'} \frac{\hat{f}_1 \cdot \hat{f}_2}{r} dV dV' , \qquad [1]$$

where μ_0 is the permeability of free space;

the $\hat{f}$ terms are unit vectors at each increment of volume dV indicating direction of current flow; and

r is the radius of the coil.

[0025] The volumetric double integral is evaluated over the two coils carrying current. For the filamentary coils under consideration, this integral reduces to a double closed line integral:

$$M = \frac{\mu_0}{4\pi} \oint_{C1} \oint_{C2} \frac{\hat{\phi} \cdot \hat{\phi}'}{r} \, dl \, dl' \qquad [2]$$

[0026] The unit vectors and the distance between differential elements are evaluated to obtain:

$$M = \frac{\mu_0 a^2}{4\pi} \int_0^{2\pi} \int_0^{2\pi} \frac{\cos(\phi - \phi')}{\sqrt{2a^2[1 - \cos(\phi - \phi')] + h^2}} \, d\phi \, d\phi' \qquad [3]$$

[0027] Normalizing the coil radius by the spacing and defining a parameter α such that $h = \alpha a$, equation [3] can be rewritten as:

$$M = \frac{\mu_0 a}{4\pi} \int_0^{2\pi} \int_0^{2\pi} \frac{\cos(\phi - \phi')}{\sqrt{(\alpha^2 + 2) - 2\cos(\phi - \phi')}} \, d\phi \, d\phi' = \frac{\mu_0 a}{4\pi} I(\alpha), \qquad [4]$$

where I is the current.

[0028] For coils of N turns each, the above equation is multiplied by N twice - once for each coil - to obtain the final expression for mutual inductance:

$$M = \frac{\mu_0 a N^2}{4\pi} I(\alpha) \qquad [5]$$

[0029] The self-inductance for a filamentary loop cannot be found by this method - the integral yields an infinite result. For a reasonable approximation, it can be assumed that the coils are #22 AWG having a radius of b = 0.64mm and the known expression for self-inductance can be used:

$$L = \mu_0 a\left(\ln\frac{8a}{b} - \frac{3}{2}\right) \qquad [6]$$

[0030] To estimate the efficiency of the coupling, circuit theory for transformers can be employed using:

$$\frac{P_{out}}{P_{in}} = \left(\frac{j\omega M}{Z_L + j\omega L}\right)\left(\frac{j\omega M Z_L}{j\omega L(Z_L + j\omega L) + \omega^2 M^2}\right), \qquad [7]$$

where P is power;

Z is impedance; and

ω is the angular frequency.

[0031] The first term in parenthesis is the current ratio and the second term is the voltage ratio for a given load impedance Z_L. For an example case, consider h=4″=10.16 cm, N=10, and a=5 cm. The mutual and self inductances are plotted in FIG. 3.

[0032] As illustrated in FIG. 3, the self inductance is noticeably higher than the mutual, due to the large separation of the coils. Referring back to FIG. 2, there is a graph of the power coupling factor for a=5cm and a=10cm for an arbitrary load impedance of 50 Ohms. For this case, the optimum frequency of operation is around 100 kHz for the 10 cm coil and just shy of

300 kHz for the 5 cm one. As expected, the larger coil gives a better result. In this example, a coupling factor of around -26 dB is achieved - meaning that 1 Watt of power input will yield around 50 mW delivered to the load.

[0033] The number of sensors that can be powered in this manner depends on the size of the power coil used and the sensor spacing. The larger the power coil is and the more turns it has, the more sensors that can be powered. In order to determine if the use of coils of unequal size will be beneficial in improving the coupling efficiency between the two coils, the mutual inductance must be re-derived in order to allow for differing radii.

[0034] For two N-turn parallel coaxial coils of radii a and b, respectively, the mutual inductance is given by:

$$M = \frac{\mu_0 abN^2}{4\pi} \oint_{C1} \oint_{C2} \frac{\hat{\phi} \cdot \hat{\phi}'}{R} dl\, dl' , \qquad [8]$$

where R is the distance between incremental segments on each coil and is given by:

$$R = \sqrt{a^2 + b^2 + h^2 - 2ab\cos(\phi - \phi')} , \qquad [9]$$

[0035] If, as before, the spacing h is normalized by the lower coil radius, a, and the upper coil radius, b, is normalized such that $h=\alpha a$ and $b=\beta b$, equation [9] can be written as:

$$R = a\sqrt{1 + \alpha^2 + \beta^2 - 2\beta\cos(\phi - \phi')} \qquad [10]$$

and the mutual inductance becomes:

$$M = \frac{\mu_0 a N^2}{4\pi} \int_0^{2\pi} \int_0^{2\pi} \frac{\cos(\phi - \phi')}{\sqrt{1 + \alpha^2 + \beta^2 - 2\beta\cos(\phi - \phi')}} d\phi d\phi' = \frac{\mu_0 a N^2}{4\pi} I(\alpha, \beta) \qquad [11]$$

[0036] To illustrate whether or not the mutual inductance can be improved, consider the example of a bottom side coil with N=10 and a=3 in. For h=4 inches, i.e., α=4/3, a plot of M vs. b can be formed as illustrated in FIG. 4.

[0037] It is clear from the plot in FIG. 4 that there is not much more mutual inductance to be gained by using differing coil sizes in this instance. The mutual inductance increases from 2.38 μH when β=1, the case of equal coil sizes, to 2.50 μH when β=1.28. This represents an increase of only 4.8%.

[0038] However, despite this modest increase, the systems and methods described herein provide advantages over existing systems for powering sensors. The use of inductive coupling provides power to the sensors without a physical connection to the sensors. Accordingly, wiring requirements for the sensors are reduced and/or eliminated. Additionally, in the case of a vessel where the sensors are on the exterior of the hull, penetrations through the hull are not required, resulting in increased structural integrity of the hull and decreased risk of leakage. Further, the inductive coupling system described herein uses a single large coil to provide power to a plurality of sensors. The use of a large coil provides for increased separation between the power coil and the sensor coils.

[0039] What has thus been described is a system for remotely powering a plurality of sensor coils by inductively coupling the sensor coils to a single, primary coil so as to bias the active circuitry of the sensors. The primary and sensor coils can have a separation on the order of inches, embedded in the acoustic layers or at their interfaces.

[0040] Obviously, many modifications and variations of the present invention may become apparent in light of the above teachings. For example, the system can be configured to suit not only applications in vessels, as described herein, but may be adapted for operation in land and air vehicles, or other applications requiring remote sensor powering. Further, the primary coil and sensor coils may be fabricated as wire coils or may be a planar coil pattern etched onto a printed circuit board, or some combination of wire and printed circuit board.

[0041] In light of the above, it is therefore understood that within the scope of the appended claims, the invention may be practiced otherwise than as specifically described.

ABSTRACT

Means and methods of remotely powering a plurality of sensor coils are described. The plurality of sensor coils can be inductively coupled to a single, primary coil so as to bias the active circuitry of the sensors. The primary and sensor coils can have a separation on the order of inches, such that the sensors can be mounted exterior to a vessel and the primary coil can be mounted interior to the vessel. In some embodiments, the primary coil can be a wire coil. In other embodiments, the primary coil can be a planar coil pattern etched onto a printed circuit board.

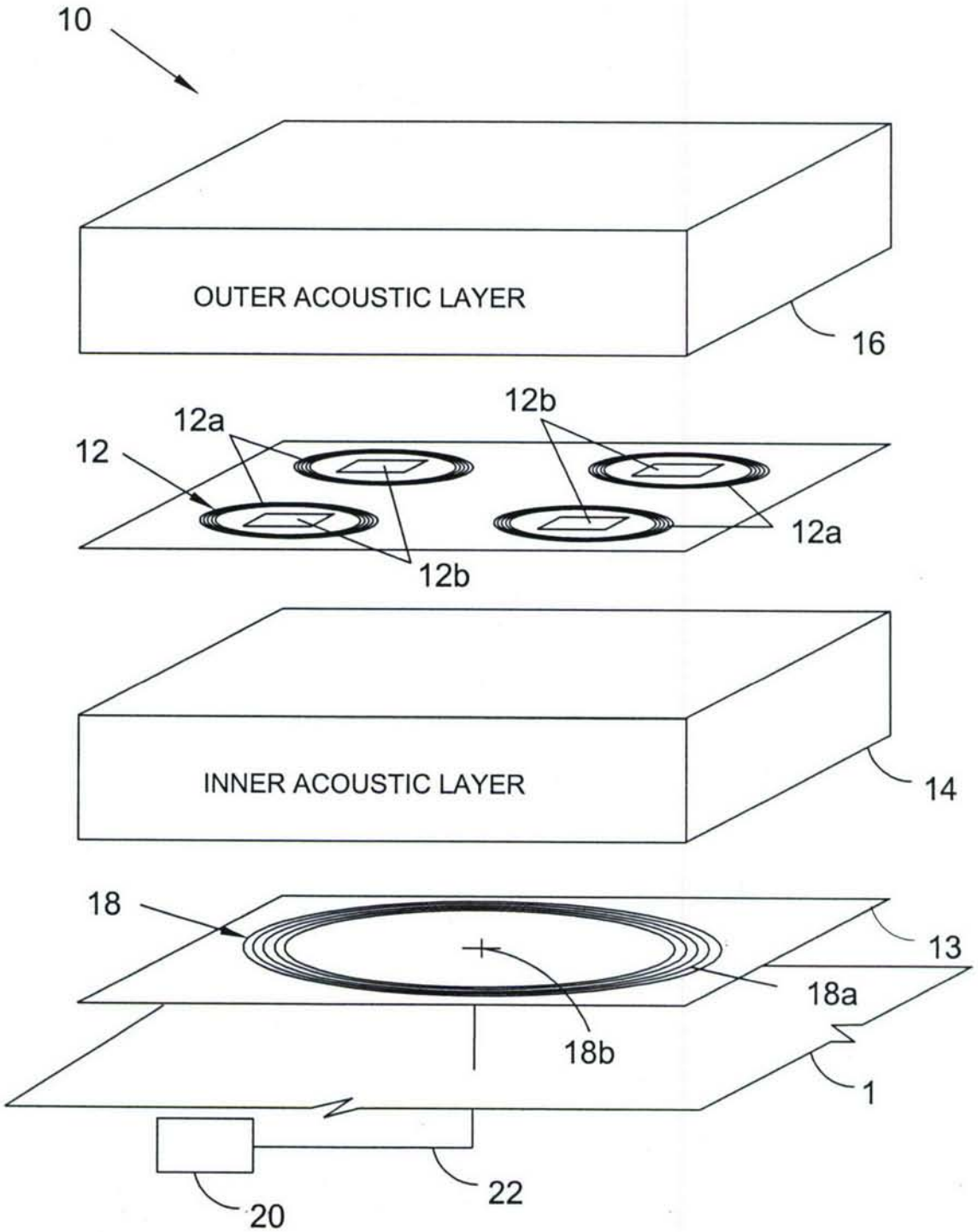
10
OUTER ACOUSTIC LAYER
16
12a
12b
12
12a
12b
INNER ACOUSTIC LAYER
14
18
13
18a
18b
1
22
20

FIG. 1

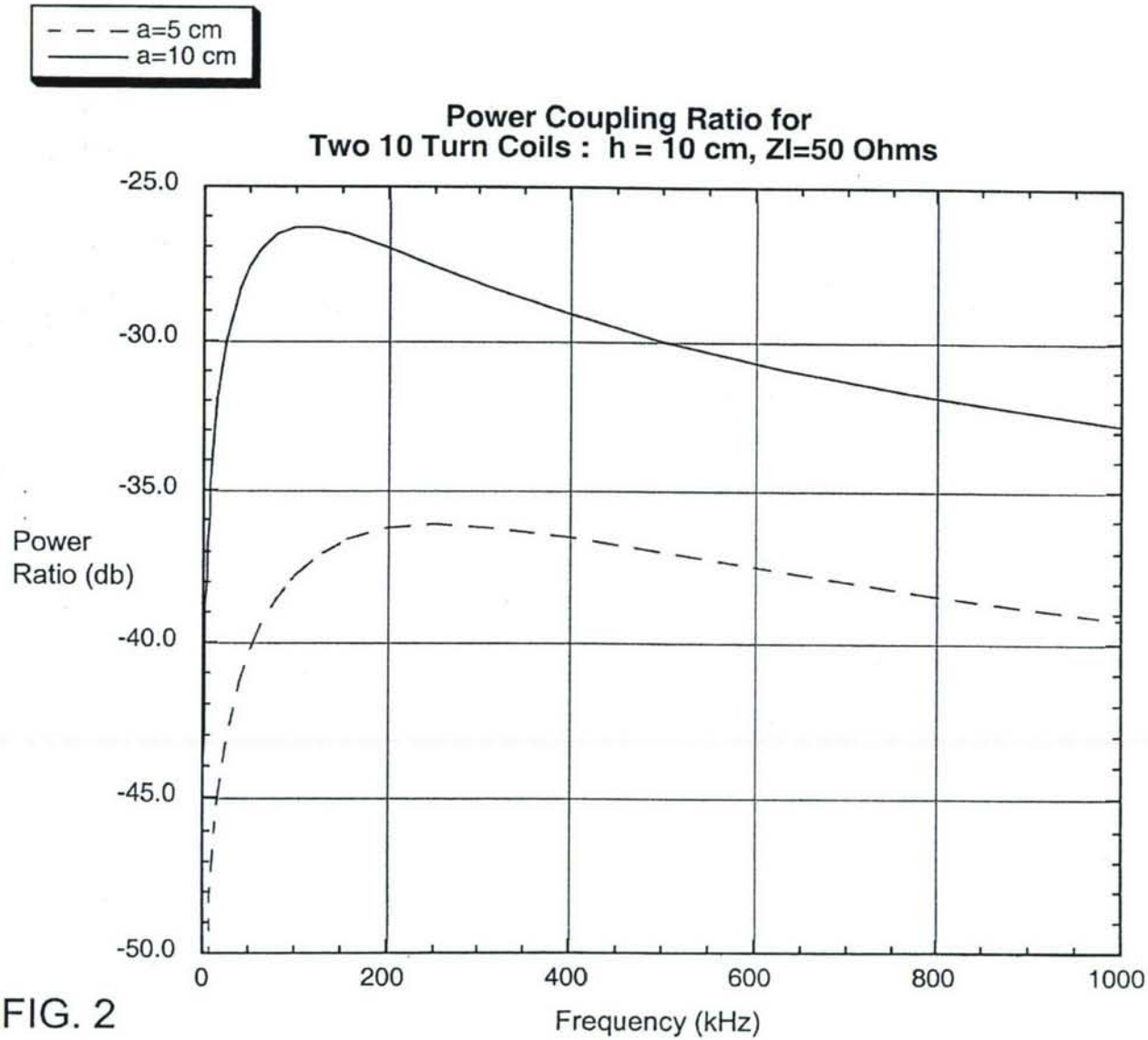
a=5 cm
a=10 cm
Power Coupling Ratio for
Two 10 Turn Coils : h = 10 cm, Zl=50 Ohms
-25.0
-30.0
-35.0
-40.0
-45.0
-50.0
Power
Ratio (db)
0
200
400
600
800
1000
Frequency (kHz)

FIG. 2

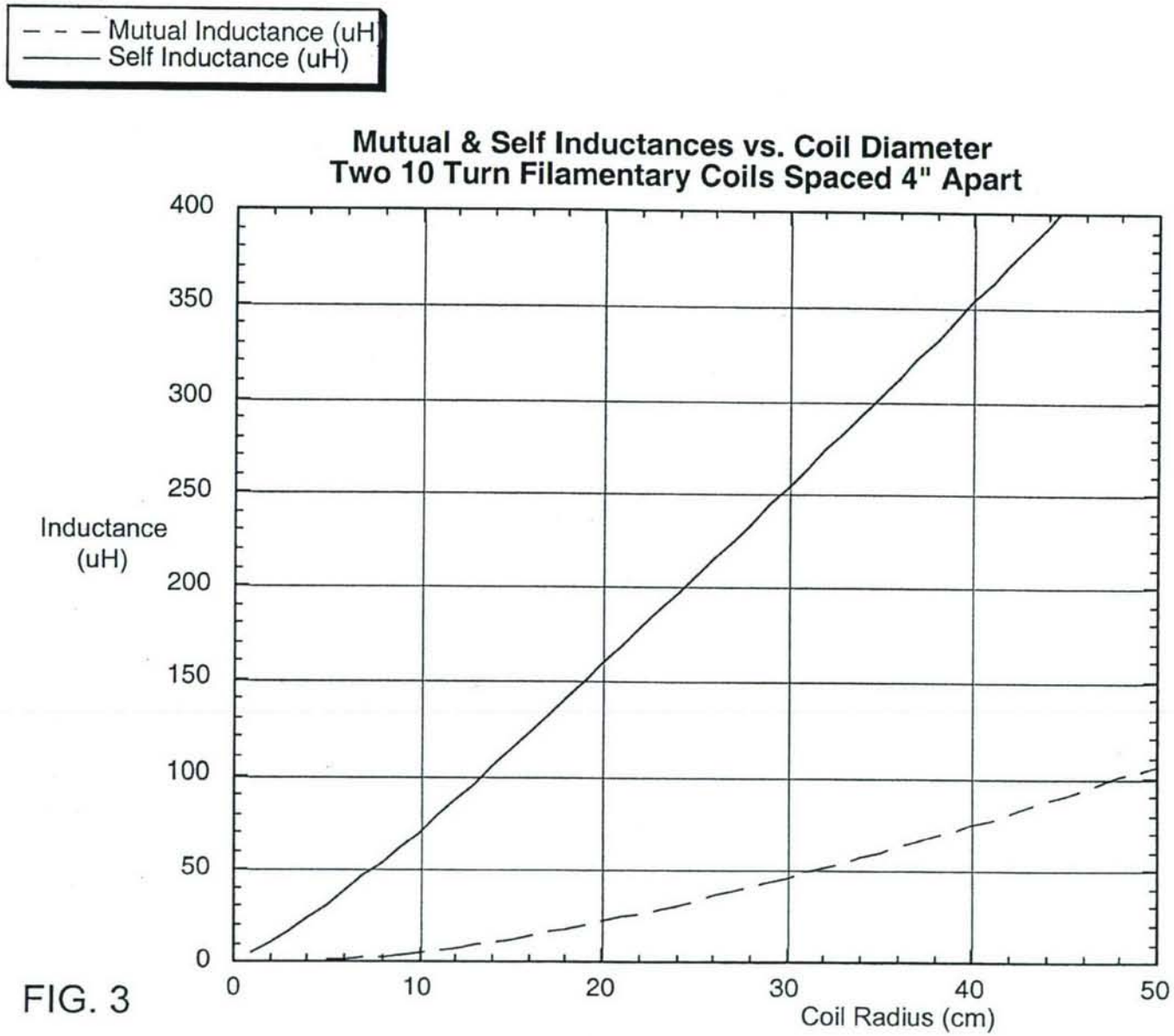
Mutual Inductance (uH)
Self Inductance (uH)
Mutual & Self Inductances vs. Coil Diameter
Two 10 Turn Filamentary Coils Spaced 4" Apart
Inductance (uH)
400
350
300
250
200
150
100
50
0
0
10
20
30
40
50
Coil Radius (cm)

FIG. 3

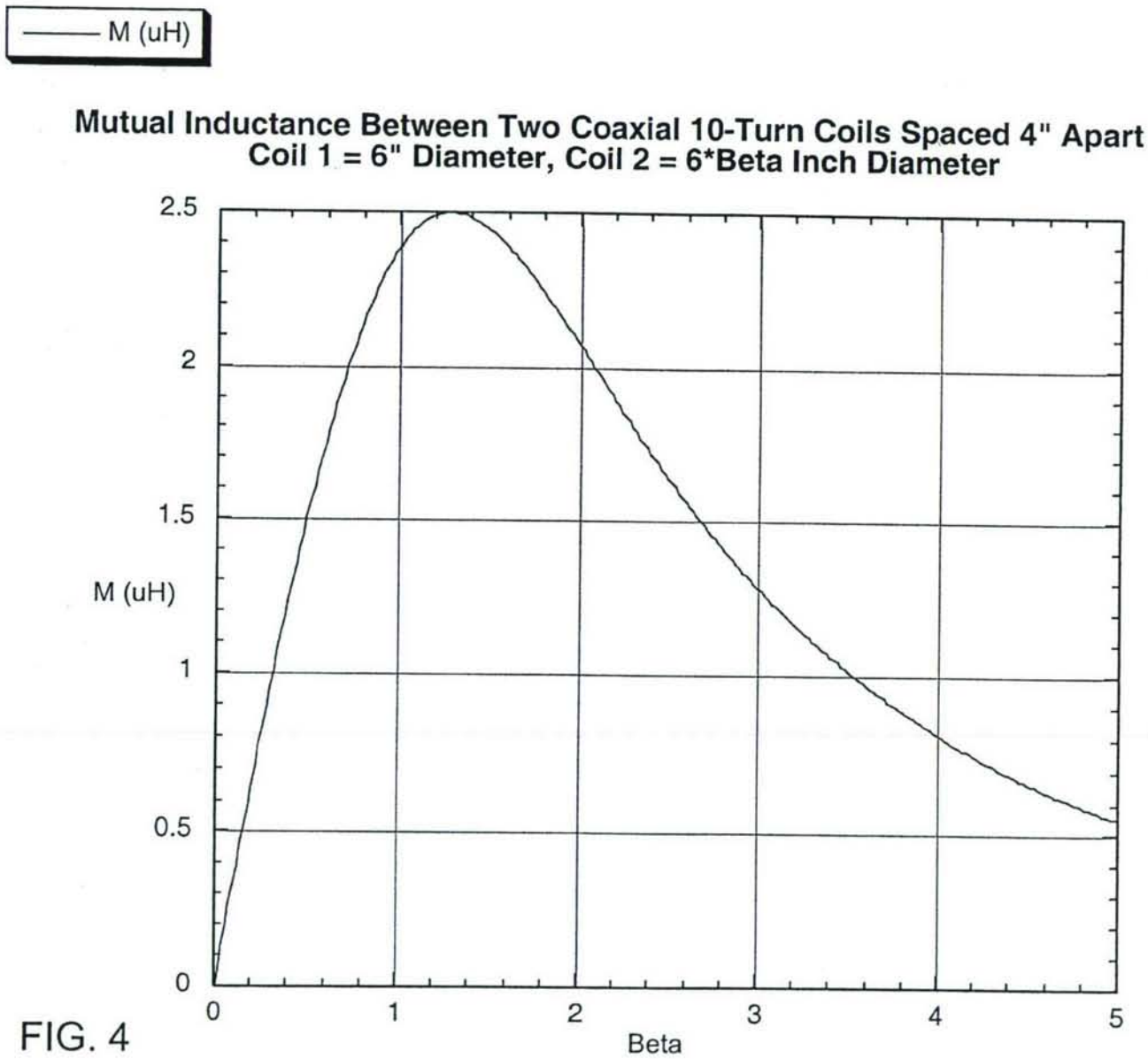
M (uH)
Mutual Inductance Between Two Coaxial 10-Turn Coils Spaced 4" Apart
Coil 1 = 6" Diameter, Coil 2 = 6*Beta Inch Diameter
2.5
2
1.5
M (uH)
1
0.5
0
0
1
2
3
4
5
Beta

FIG. 4