DEPARTMENT OF THE NAVY

OFFICE OF COUNSEL
NAVAL UNDERSEA WARFARE CENTER DIVISION
1176 HOWELL STREET
NEWPORT RI 02841-1708

IN REPLY REFER TO:

Attorney Docket No. 78705
Date: 30 March 2004

The below identified patent application is available for licensing. Requests for information should be addressed to:

PATENT COUNSEL
NAVAL UNDERSEA WARFARE CENTER
1176 HOWELL ST.
CODE 00OC, BLDG. 112T
NEWPORT, RI 02841

Serial Number 10/641,584

Filing Date 8/11/03

Inventor Donald V. Beauregard

If you have any questions please contact James M. Kasischke, Deputy Counsel, at 401-832-4736.

DISTRIBUTION STATEMENT A
Approved for Public Release
Distribution Unlimited

Attorney Docket No. 78705

PROCESS FOR CONTINUOUS FOAM EXTRUSION OF THERMOPLASTIC POLYMERS VIA SYNTACTIC AND CHEMICAL FOAMING AGENTS

TO ALL WHOM IT MAY CONCERN:

BE IT KNOWN THAT (1) DONALD V. BEAUREGARD, employee of the United States Government of America and citizen of United States of America (2) NICK R. SCHOTT, (3) STEPHEN A. ORROTH, (4) LAWRENCE J. TRAINER, (5) JUDITH A.H. JONES AND (6) ROBERT J. REEDER, citizens of the United States of America, residents of (1) Jamestown, County of Newport, State of Rhode Island, (2) Westford, County of Middlesex, Commonwealth of Massachusetts (3) Windham, County of Rockingham, State of New Hampshire, (4) Miami Lakes, County of Dade, State of Florida, (5) Amherst, County of Hillsborough, State of New Hampshire, and (6) Waltham, County of Middlesex, Commonwealth of Massachusetts, have invented certain new and useful improvements entitled as set forth above of which the following is a specification:

JEAN-PAUL A. NASSER, ESQ.
Reg. No. 53372
Naval Undersea Warfare Center
Division, Newport
Newport, RI 02841-1708
TEL: 401-832-4736
FAX: 401-832-1231

23523
PATENT TRADEMARK OFFICE

20040405 089

Attorney Docket No. 78705

PROCESS FOR CONTINUOUS FOAM EXTRUSION OF THERMOPLASTIC POLYMERS VIA SYNTACTIC AND CHEMICAL FOAMING AGENTS

STATEMENT OF GOVERNMENT INTEREST

The invention described herein may be manufactured and used by or for the Government of the United States of America for governmental purposes without the payment of any royalties thereon or therefor.

CROSS REFERENCE TO OTHER PATENT APPLICATIONS

Not applicable.

BACKGROUND OF THE INVENTION

(1) Field of the Invention

The present invention relates to plastic compositions and processes for producing plastic compositions and more particularly to foam extruded thermoplastic compositions for use as insulators in electrical conductors, cables and conductors and to processes for producing the same.

(2) Description of the Prior Art

Many naval submarines use a foam jacketed antenna cable made out of a polyethylene which is chemically foamed during a single screw extrusion operation. The material has proven to have

excellent electrical properties, marginal low density and at high hydrostatic pressure shows compression set. Efforts have been made to find improved polymers and blowing agents to obtain an extrudate with improved properties for use on submarines and for other uses.

The prior art discloses a number of processes relative to use of syntactic and chemical blowing agents in continuous foam extrusion.

U.S. Patent No. 4,837,251 to Okey et al., for example, discloses a composition for a pressure-molded core of a composite structure, including a thermal plastic resin. The composition also includes a component to reduce the coefficient of thermal expansion, a lightweight high compressive strength filler and a blowing agent. The thermoplastic resin may be polyetheretherketone, the component may be carbon fibers and the filler may be hollow glass microspheres.

U.S. Patent No. 5,120,769 to Dyksterhouse et al. discloses compositions, which are suitable for the preparation of thermoplastic syntactic foam intermediate and final products. These compositions comprise a slurry or putty containing thermoplastic particles, microballoons and a non-solvent, optionally in the presence of suitable thickeners, binders and surfactants. In a preferred embodiment, the composition contains particles of an engineering thermoplastic having a mean particle size less then about 100 μm, microballoons, water as the non-

solvent and a thickener/binder which is a lightly crosslinked polyacrylic acid.

U.S. Patent No. 5,122,316 to Saatchi et al. discloses a process using high temperature thermoplastic polymers in the in-situ fabrication in the formation of foamed composite sandwich or foam articles often resulting in weak unsound products, which may be avoided by utilizing a high temperature thermoplastic in powder form, a blowing agent having a high decomposition temperature, and, if desired, reinforcers and/or fillers, mixing the thermoplastic, blowing agent and reinforcer and fillers, placing the mixture in a mold and if forming a composite structure, in abutment with at least one skin and applying sufficient heat and/or pressure to the mold and its contents to melt the thermoplastic and generate gas within said mixture by decomposition of the blowing agent. Also, an activator may be included with the blowing agent, which promotes the production of gas. The thermoplastic should be free from any material, which will react with the blowing agent or the activator at temperatures below the melting point of the thermoplastic.

U.S. Patent No. 5,174,932 to Saatchi discloses a process using high temperature thermoplastic polymers in the in-situ fabrication in the formation of foamed composite sandwich or foam articles often resulting in weak unsound products, which may be avoided by utilizing a high temperature thermoplastic in powder form, a blowing agent having a high decomposition temperature,

and, if desired, reinforcers and/or fillers, admixing the thermoplastic, blowing agent and reinforcer and fillers, placing the mixture in a mold and, if forming a composite structure, in abutment with at least one skin, compacting the contents of the mold, and applying sufficient heat and/or pressure to the mold and its contents to melt the thermoplastic and generate gas within said mixture by decomposition of the blowing agent. Also, an activator may be included with the blowing agent, which promotes the production of gas. It is disclosed that the thermoplastic should be free from any material, which will react with the blowing agent or the activator at temperatures below the melting point of the thermoplastic. Articles made by the process are also disclosed.

U.S. Patent No. 5,401,785 to Kumagai et al. discloses a process of obtaining foamed polyurethanes substantially free from non-uniform density distribution by dispersing an inert gas with mechanical stirring into a foamed polyurethane-forming composition containing substantially no flowing agent and comprising (1) an organic polyisocyanate component, (2) a polyol component comprising a high molecular weight polyol (A1) and a low molecular weight polyol (A2), (3) a dehydrating agent (B) and optionally organic microballoons, and curing the resulting composition containing therein the inert gas substantially homogeneously distributed. It is disclosed that foamed

polyurethanes thus obtained are lightweight and of reduced warpage after processing and are suitable for model materials.

U.S. Patent No. 5,691,390 to Harrison et al. discloses a low-density, porous material prepared by mixing together microballoons and an oligomeric precursor to a polyesterimide polymer. The oligomeric precursor has an initial viscosity sufficiently low that it can flow and wet the microballoons when first heated to a polymerization processing temperature, and thereafter polymerize. It is disclosed that fibers may be controllably incorporated into the material during processing to impart specific properties, and air may be controllably incorporated into the material during processing to further decrease its density.

U.S. Patent No. 5,783,272 to Wong discloses a thin, tacky, non-pourable in-situ expandable thermoplastic particles and thermosettable matrix resin that contains an essentially uniform density and thickness across the breadth of the film. The in-situ expandable mass is not pourable yet can be easily dispensed in a uniform manner within a mold and thereafter expanded to the dimensions of the mold. Composites and reinforced compositions, as well as methods of molding are disclosed.

U.S. Patent No. 5,804,762 to Jones et al. discloses an electromagnetic interference (EMI) shielding gasket for mounting on a substrate having a surface. The gasket is formed of a resilient, elongated core member extending along a central

longitudinal axis and having an outer circumferential surface defining a cross sectional profile, and an electrically-conductive outer member having an inner and an outer surface and extending from a first distal end to a sheathing portion. The sheathing portion of the outer member covers a portion of the circumferential surface of the core member and extends from a first proximal end to a second proximal end. The first distal end of the outer member and the first proximal end of the sheathing portion thereof define a first inner shear surface therebetween, which is attachable to the substrate. The uncovered portion of the circumferential surface of the core member defines an interface surface for disposition on the surface of the substrate.

U.S. Patent No. 6,074,475 to Harrision et al. discloses low-density, syntactic foam, which is prepared by mixing together a plurality of microballoons and a finely divided solid thermosetting resin. Fibers are also preferably incorporated into the material during processing to impart specific properties. The mixture is heated to allow the thermosetting resin to flow and wet the microballoons in the mixture. The mixture is then cured to set and cross-link the thermosetting resin to form the syntactic foam of the invention. It is also disclosed that the syntactic foam material has highly uniform properties and can be used in aerospace applications.

U.S. Patent No. 6,075,205 to Zhang discloses an EMI shielding and environmental sealing gasket for interposition between a first substrate and an oppositely disposed second substrate. The gasket is formed of a resilient, tubular body having a generally continuous interior and exterior surface defining a wall thickness of the gasket therebetween, and including base, arcuate and lateral members. The base member extends intermediate a first and a second edge and has an inner and outer for contact with the second substrate. The arcuate member, which has an inner surface spaced apart radially form the inner surface of the base member and an outer surface for contact with the first substrate, extends intermediate a first proximal end disposed radially inwardly of the first edge of the base member, and a second proximal end disposed radially inwardly of the second edge of the base member. A first lateral member extends from the first edge of the base member to the first proximal end of the arcuate member, with a second lateral member extending from the second edge of the base member to the second proximal end of the arcuate member. Each of the lateral members has an outer surface and an inner surface, which defines an acute angle with the inner surface of the base member. It is disclosed that the gasket so constructed is deflectable under a predetermined compressive force between the first and second substrates into a collapsed orientation characterized in that

substantially continuous contact is maintained between the outer surface of the base member and the second substrate.

A need still exists for an improved process for producing a buoyant electrical insulative material with good mechanical cushioning properties.

SUMMARY OF THE INVENTION

It is an object of the present invention to provide a process to continuously extrude a low density closed cell foam using thermoplastic polymers and syntactic polymeric microballoons, which will physically expand during processing, in combination with chemical blowing agents.

It is a further object of the present invention to provide a closed cell foam extrudate with a density below 0.5 g/cm^3, low moisture absorption, good low temperature flexibility, good skin surface, controlled foaming, good compressive strength, low compression set and good electrical and mechanical properties as defined for the application of a submarine antenna cable jacket.

The present invention is a process for producing a foam electrical insulative material. As a first step, a composition is provided, which is a thermoplastic polymer resin selected from the group consisting of a polyethylene octene, a polyethylene hexene, a polyethylene heptene, a polyethylene nonene and a polyethylene decene; a filler selected from the group consisting of expandable polymer microballoons and glass or other rigid

microspheres; and a blowing agent comprising a physical blowing agent and a chemical blowing agent, wherein the chemical blowing agent is selected from one or more of the group consisting of an exothermic blowing agent and an endothermic blowing agent. This composition is then continuously foam extruded.

BRIEF DESCRIPTION OF THE DRAWINGS

Other objects, features and advantages of the present invention will become apparent upon reference to the following description of the preferred embodiments and to the drawings, wherein corresponding reference characters indicate corresponding parts in the drawings and wherein:

FIG. 1 is a schematic drawing on the apparatus by means of which a preferred embodiment is the method of the present invention may be carried out.

DESCRIPTION OF THE PREFERRED EMBODIMENT

It has been found that the combination of matallocene catalyzed polyolefins, expandable acrylic based microballoons with a physical blowing agent and exothermic or endothermic chemical blowing agent (CBA) or a combination of exothermic and endothermic CBAs produced the desired density reduction during extrusion as the melt exited the die. Preferably the process is a single step, continuous extrusion foaming process that may be performed with or without a breaker plate.

The preferred polymeric resin used in the invention is polyethylene 1-octene. Typical commercial grades of this polymer are ENGAGE 8100, which is commercially available from Dupont-Dow or AFFINITY EG8100, which is commercially available from Dow Chemical. EXPANCEL 092-120, which is commercially available from AKZO NOBEL may be used as the acrylic expandable syntactic foaming agent. Alternatively, the resin may be any polyethylene octene, polyethylene hexene, polyethylene heptene, polyethylene nonene and polyethylene decene. Preferably the resin will have a density of from about .75 g/cm^3 to about 1.5 g/cm^3. Alternatively, rigid hollow microspheres may be used, which may be glass microspheres that are commercially available from 3M under the trade name/product number Scotchlite S60. Other suitable rigid microspheres are none. The endothermic chemical foaming agent used was SAFOAM FP, which is commercially available from Reedy International and the exothermic chemical foaming agent used was CELOGEN AZ (azodicarbonamide), which is commercially available from Unroyal Chemical Division. These foaming agents are typical of their classification and other commercially available chemical foaming agents could be used in their place. A typical formulation is presented in Table 1.

Table 1: Typical Formulation

Component	Percentage Loading
Polyethylene 1-octene	88-97%
Expandable Acrylic Microballoon	3-10%
Exothermic CBA	0-1%
Endothermic CBA	0-1%

Referring to FIG. 1, the apparatus by means of which the method of the present invention may be practiced includes a gravity fed hopper 10 into which the resin, filler and blowing agent are initially added. The mixture is then metered into an extruder 12, which is made up of a barrel 14 with a single screw 16. The extruder 12 also has a breaker plate 18 and then a die 20 at its terminal end. A hot extrudate 22 leaves the die 20 into a reservoir 24 having copper heating coils 26, which are contained in water bath 28. Cooled extrudate 30 leaves the water bath 28 and enters roller apparatus 32. Roller apparatus 32 includes an upper section 34, which is comprised of roll 36 and roll 38 and continuous belt 40. The roller apparatus 32 also includes a lower section 42. Lower section 42 includes a roll 44 and a roll 46 and a continuous belt 48. The upper section 34 is superimposed in spaced relation over the lower section 42. The cooled extrudate 30 passes between upper section 34 and lower section 42 of the roller apparatus 32 and emerges a completed rolled extrudate 50. Both the resin and the blowing agents are preblended to be fed by gravity in the hopper 10 via single screw extrusion. The

extruder 12 has a water jacket around the feed throat and the barrel 14 is divided into several zones to heat the polymer as it progresses to the die 20. The temperature of the melt is increased so that the resin melted is plasticated and the chemical blowing agent is decomposed as the melt travels to the die 20. As the melt temperature increases the physical blowing agent also causes an expansion of the acrylic microballoons (syntactic foam portion). Conditions in the extruder 12 are regulated, i.e., melt temperature, pressure, shear rate, residence time so as to produce a low-density foam as the melt exits the die 20. Typical processing conditions are shown in Table 2. These processing conditions are presented for an extruder 12 with three heating zones, one gate-heating zone and two die heating zones. The invention is not limited to this many heating zones and the foaming process may be performed on extruders with a different number of barrel, gate and die heating zones. Head pressure developed is largely dependent on screw speed, melt viscosity, die design and the use of breaker plate. Due to the wide variation in variables that effect head pressure, a very wide range of possible head pressures is presented in Table 2.

Table 2: Typical Processing Conditions

Processing Parameter	Setting
Barrel Zone 1	150°C - 170°C
Barrel Zone 1	165°C - 185°C
Barrel Zone 1	165°C - 185°C
Gate Zone	165°C - 185°C
Die Zone 1	180°C - 200°C
Die Zone 2	180°C - 200°C
Screw Speed	10-50 RPM
Head Pressure	2-14 MPa

(the screw speed and screw design). The shear rate and residence time in the extruder 12 depend upon the invention using both a 24:1 and 30:1 L/D extruders 12. The screws 16 used possessed compression ratios of 2.5-3:1. All screws 16 were single stage screws with approximately one-third of the screw 16 comprising the feed section, one-third of the screw 16 comprising the transition and one-third of the screw 16 comprising the metering section of the screw. Screws 16 with a Maddock mixing section and screws 16 with a Pulsar mixing section were used in the development of the invention. The die design was adjusted so that melt fracture was minimal. This is done via correct design of the die land. Since the viscosity of the melt decreases with increased temperature, the melt temperature has to stay below a certain limit.

The melt extrudate 22 is passed through a water bath 28, which has copper tubes 26 to heat the water to an elevated temperature. A set of foamed rubber pull rolls 32 continuously pulled the extrudate 22 through the bath 28. The haul off speed

in combination with the extruder screw speed and process conditions (melt temperatures, viscosity, melt pressure) determines the outside diameter, extrudate foam density and surface roughness. (Typically an optimum condition where low density and good skin quality are obtained can be found.)

Example 1: Acrylic Microballoons

95.4g of polyethylene 1-octene resin commercially obtained from Dow Chemical (supplier) under the trade name/product number Affinity EG 8100 is mixed with 4.6g of expandable acrylic microballoons commercially obtained from Akzo-Nobel (supplier) under the trade name/product number Expancel 092 MB 120 in the gravimetric hopper 10 of a single screw extruder 12. The acrylic balloons contain a hydrocarbon gas (a physical blowing agent). The mixture is then processed in the extruder under the following temperature conditions: 250°F, 280°F, 300°F and 320°F in the four barrel zones, 320°F in the die zones. Screw speed of 20 rpm. The resulting exudate 50 should have a density of lower than 0.5g/cc and pressure conditions.

Example 2: Acrylic Microballoons with an Exothermic CBA

96.4g of polyethylene 1-octene resin commercially obtained from Dow Chemical (supplier) under the trade name/product number Affinity EG 8100 is mixed with 3.1g of expandable acrylic microballoons in a masterbatch commercially obtained from Akzo-

Nobel (supplier) under the trade name/product number Expancel 092 MB 120 in the gravemetric hopper 10 of a single screw extruder 12. Also included in the mixture is 0.5g of Azodicarbonate commercially obtained from Uniroyal Chemical Co. (supplier) under trade name/product number Celogen AZ. The mixture is then processed in the extruder 12 under the following temperature: 250°F, 280°F, 300°F and 320°F in the four barrel zones, 250°F in the die zones. Screw speed of 20 rpm. The resulting exudate 50 should have a density of lower than 0.5g/cc.

Example 3: Acrylic Microballoons with an Endothermic CBA

96.4g of polyethylene 1-octene resin commercially obtained from Dow Chemical (supplier) under the trade name/product number Affinity EG 8100 is mixed with 3.1g of expandable acrylic microballoons in a masterbatch commercially obtained from Akzo-Nobel (supplier) under the trade name/product number Expancel 092 MB 120 in the gravemetric hopper 10 of a single screw extruder 12. The acrylic microballoons contain a hydrocarbon gas (a physical blowing agent). Also included in the mixture is 0.75g of Safoam FP commercially obtained from Reedy International (supplier). The mixture is then processed in the extruder 12 under the following temperature conditions: 250°F, 280°F, 300°F and 320°F in the four barrel zones, 300°F in the die zones. Screw speed of 20 rpm. The resulting exudate 50 should have a density of lower than 0.5g/cc.

Example 4: Acrylic Microballoons with an Endothermic CBA

96.4g of polyethylene 1-octene resin commercially obtained from Dow Chemical (supplier) under the trade name/product number Affinity EG 8100 is mixed with 3.1g of expandable acrylic microballoons in a masterbatch commercially obtained from Akzo-Nobel (supplier) under the trade name/product number Expancel 092 MB 120 in the gravemetric hopper 10 of a single screw extruder 12. The acrylic microballoons contain a hydrocarbon gas (a physical blowing agent). Also included in the mixture is 0.5g of Azodicarbonamide commercially obtained from Uniroyal Chemical Co. (supplier) under the trade name/product number Celogen AZ znd 0.75g of Safoam FP commercially obtained from Reedy International (supplier). The mixture is then processed in the extruder 12 under the following temperature conditions: 250°F, 280°F, 300°F and 320°F in the four barrel zones, 250°F in the die zones. Screw speed of 20 rpm. The resulting exudate 50 should have a density of lower than 0.5g/cc.

Example 5: Acrylic Microballoons in A pre-compounded foam grade of LDPE 96.15g of DFD 4960, a pre-compounded foaming grade of LDPE, commercially obtained from Union Carbide (supplier) is mixed with 3.1g of expandable acrylic microballoons in a masterbatch commercially obtained from Akzo-Nobel (supplier) under the trade name/product number Expancel 092 MB 120 in the gravemetric hopper 10 of a single screw extruder 12. The acrylic microballoons contain a hydrocarbon gas (a physical blowing

agent). The mixture is then processed in the extruder 12 under the following temperature conditions: 200°F, 250°F, 260°F and 275°F in the four barrel zones, 250°F in the die zones. Screw speed of 20 rpm. The resulting exudate 50 should have a density of lower than 0.5g/cc.

For the purposes of this disclosure, the term "foam extruding" refers to any extrusion process in which inert gases in the materials being processed are allowed to expand to form a cellular polymeric material after the material being processed is discharged from a pressurized extruder.

For the purposes of this disclosure, a "physical blowing agent" is any material used in a foam extrusion process which produces an inert gas as a result of a physical change of state in that material to form a cellular polymeric material. A non-limiting example of the same would include low boiling point liquid organic materials such as isopentene.

For the purpose of this disclosure, a "chemical blowing agent" is any material used in a foam extrusion process, which produces an inert gas as a result of a chemical change in that material to form a cellular polymeric material. A non-limiting example of the same would includes azodicarbonamide.

For the purpose of this disclosure, an "expandable microballoon" refers to any hollow particle comprised of a polymeric or other flexible or expandable material. While such particles are often spherical in shape, particles of other

shapes, which may have these characteristics, are also intended to be encompassed within this definition.

For the purpose of this disclosure, a "rigid microsphere" is any hollow particle, which is comprised of a rigid exterior. While such particles are often glass and spherical in shape, hollow particles comprised of other rigid material and having other shapes are also intended to be encompassed within this definition.

It will be appreciated that a process for making a buoyant closed cell foam extrudate polymeric material having a density below 0.5 g/cm^3, low water absorption, low compression set, with excellent electrical insulating and cushioning properties has been described.

While the present invention has been described in connection with the preferred embodiments of the various figures, it is to be understood that other similar embodiments may be used or modifications and additions may be made to the described embodiment for performing the same function of the present invention without deviating therefrom. Therefore, the present invention should not be limited to any single embodiment, but rather construed in breadth and scope in accordance with the recitation of the appended claims.

Attorney Docket No. 78705

PROCESS FOR CONTINUOUS FOAM EXTRUSION OF THERMOPLASTIC POLYMERS VIA SYNTACTIC AND CHEMICAL FOAMING AGENTS

ABSTRACT OF THE DISCLOSURE

A process for producing an electrical insulative material. First there is produced a composition including a thermoplastic polymer resin selected from the group consisting of a polyethylene octene, a polyethylene hexene, a polyethylene heptene, a polyethylene nonene and a polyethylene decene; a filler selected from the group consisting of expandable polymer microballoons and glass microspheres; and a blowing agent comprising a physical blowing agent and a chemical blowing agent. The chemical-blowing agent is selected from one or more of the group consisting of an exothermic blowing agent and an endothermic blowing agent. This composition is then continuously foam extruded.

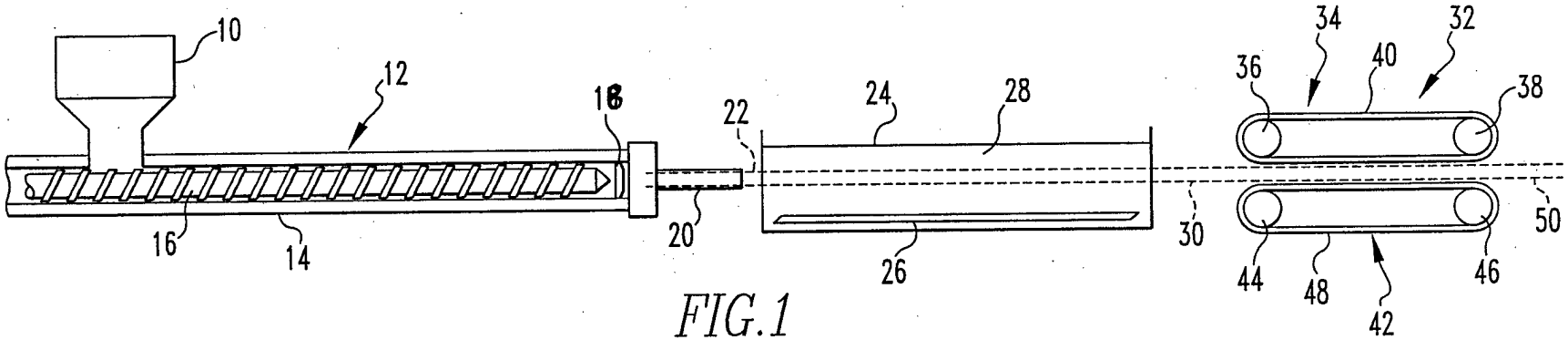

FIG.1