DEPARTMENT OF THE NAVY

OFFICE OF COUNSEL
NAVAL UNDERSEA WARFARE CENTER DIVISION
1176 HOWELL STREET
NEWPORT RI 02841-1708

IN REPLY REFER TO:

Attorney Docket No. 82829
Date: 2 February 2004

The below identified patent application is available for licensing. Requests for information should be addressed to:

PATENT COUNSEL
NAVAL UNDERSEA WARFARE CENTER
1176 HOWELL ST.
CODE 00OC, BLDG. 112T
NEWPORT, RI 02841

Serial Number 10/672,969

Filing Date 9/29/03

Inventor Michael T. Ansay

If you have any questions please contact James M. Kasischke, Deputy Counsel, at 401-832-4736.

DISTRIBUTION STATEMENT A
Approved for Public Release
Distribution Unlimited

Attorney Docket No. 82829
Customer No. 23523

SUBMARINE AIR BAG LAUNCH ASSEMBLY

TO ALL WHOM IT MAY CONCERN:

BE IT KNOWN THAT (1) MICHAEL T. ANSAY, and (2) JOHN R. LITTLE, citizens of the United States of America, employees of the United States Government, and residents of (1) Johnston, County of Providence, State of Rhode Island, and (2) Swansea, County of Bristol, Commonwealth of Massachusetts, have invented certain new and useful improvements entitled as set forth above, of which the following is a specification.

JAMES M. KASISCHKE, ESQ.
Reg. No. 36562
Naval Undersea Warfare Center
Division, Newport
Newport, RI 02841-1708
TEL: 401-832-4736
FAX: 401-832-1231

20040213 102

Attorney Docket No. 82829

SUBMARINE AIR BAG LAUNCH ASSEMBLY

STATEMENT OF GOVERNMENT INTEREST

The invention described herein may be manufactured and used by and for the Government of the United States of America for Governmental purposes without the payment of any royalties thereon or thereto.

BACKGROUND OF THE INVENTION

(1) Field of the Invention

The present invention relates to a launch assembly for expelling bodies from an underwater vehicle, and more particularly to an air bag launch assembly for launching weapons and/or vehicles from a submarine.

(2) Description of the Prior Art

Traditionally, weapons and other vehicles have been stowed inside a submarine's torpedo room where they are protected from the corrosiveness of the ocean. The weapons may thereafter be launched from the submarine torpedo tubes as needed. An alternate launch method used by submarines involves launching weapons from individual air tight pressure vessels that are located external to the submarine's pressure hull. These

individual pressure vessels are stored within modular, external bays and protect the individual weapons from the high pressure and corrosiveness of the ocean environment.

The traditional method of storing weapons inside the submarine's pressure hull theoretically allows for very dense packing of weapons. However, if the space occupied by the torpedo tubes, impulse tanks, shutter doors, inlet cylinders, muzzle doors, breech doors, weapon launchers, and the weapon loading and handling system is added to the space occupied by the weapons, the apparent packing density of weapons is lost. By locating vehicles external to the submarine's pressure hull, the weight of the vehicles is greatly reduced. This is due to the buoyant force difference between air and water. This weight difference allows for a smaller less costly submarine volume to float the weight of the vehicles.

Individual weapons located in individual pressure vessels external to the submarine's pressure hull also occupy excessive space thus limiting the packing density, and adding significant weight to the submarine. Each individual pressure vessel has its own thick walled cylinder, self contained gas generator, launch capsule, muzzle door, weapon positive pressure ventilation system, and operational hydraulics and linkages. This adds to the complexity as well as the weight of the system.

Accordingly, there is needed in the art a launch system which is low in cost to construct and operate, high in reliability, easy to maintain, and safe to operate. Preferably, the launch system should also be simple in design, quiet during operation, relatively lightweight, and compact.

SUMMARY OF THE INVENTION

The present invention is directed to an air bag launch assembly which allows for modular loading onto a submarine, the launch of weapons external to the submarine pressure hull, while also achieving greater packing densities. The air bag launch assembly provides a simple method of launching weapons and/or vehicles from densely packed storage bins located within modular payload bays on submarines. According to one embodiment, the air bag launch assembly includes a large, watertight pressure container or payload bay, one or more smaller, watertight weapon canisters used to contain the weapon and/or vehicle and which is sized to fit within the larger pressure container; and one or more air bag inflators attached to the top and/or sides of the small weapon canisters. A support framework designed to hold multiple weapon canisters in position within the larger container may also be provided. Preferably, the containers are designed to withstand pressure to the deepest operating depths of the submarine to which they are attached, whereas the

smaller, weapon canisters need only be capable of withstanding shallow sea pressures since they are housed within the larger containers.

BRIEF DESCRIPTION OF THE DRAWINGS

It should be understood that the drawings are provided for the purpose of illustration only and are not intended to define the limits of the invention. The foregoing and other objects and advantages of the embodiments described herein will become apparent with reference to the following detailed description when taken in conjunction with the accompanying drawings in which:

FIG. 1 is a perspective view of an air bag launch assembly according to the present invention in a closed, non-operative position;

FIG. 2 is a perspective view of the air bag launch assembly of FIG. 1 in an open position;

FIG. 3 is a cross-sectional view of the air bag launch assembly taken along lines 3-3 of FIG. 2; and

FIG. 4A and 4B are diagrammatic representations of the air bag launch assembly of FIG. 1 during launch of a weapon or other device.

DESCRIPTION OF THE PREFERRED EMBODIMENTS

Referring now to the Figures, the air bag launch assembly **10** includes a payload bay or pressure container **12** designed to be mounted externally on a hull, one or more smaller canisters **14** for storing a weapon, vehicle, or other device (not shown) and which is sized to fit within the larger pressure container **12**; and one or more air bag inflators **16** (FIG. 4) supported on a corresponding canister. The larger pressure container **12** is preferably watertight and should be made of a material that can withstand ocean pressure to the deepest operating depths of the submarine hull to which the pressure container is to be attached. The containers **12** may be removably attached to the hull of the submarine in any known manner and may preferably include a body **18** sized to hold the smaller canisters **14**, and a cover or hatch **20** which is moveable between a closed (FIG. 1) and an open (FIG. 2) position for launching the canisters **14**. The body **18** may preferably be cylindrical, as shown, or any alternate shape. In the closed position, the pressure container **12** will normally be filled with air until a canister launch is desired. Because the large pressure containers **12** are used to protect the devices stored within the smaller canisters **14** from the corrosive seawater, they should also be made of a corrosion resistant material. A watertight seal may also be provided so

that the containers remain watertight when closed as the submarine maneuvers through the ocean environment.

The smaller canisters **14** can be provided to protect the weapon, vehicle or other device during a dry launch as it travels a short distance through the ocean water and up to the ocean's surface. The canisters **14** may include a cylindrical body **22** that houses the weapon, vehicle, or other device to be launched, as shown, or any alternate shape and a top enclosure **24**. Once the ocean's surface is reached, the top enclosure **24** of the canister **14** is opened to allow the device to exit. The canister design is similar to past Harpoon weapon canisters used when Harpoon weapons were launched from horizontal torpedo tubes. If desired, canister **14** can have a bottom enclosure **26** which may also be opened to allow exhaust gases to escape during launch of the device from the canister **14**. An optional tether **27** is shown for providing communication between body **18** or submarine and canister **14** after release. The watertight canisters **14** also prevent corrosion and/or electrical damage to the stored device, as the devices remain dormant until needed. In particular, when the large container **12** is flooded to equalize pressure with the ambient ocean surroundings, the small canister protects their stored weapons and/or vehicles. Thus, the individual canisters **14** get wet each time the large container **12** is flooded to launch a weapon and/or vehicle. The

watertight canisters **14** are also provided to help reduce the weight of the weapon and/or vehicle, and assist in ascending the devices to the ocean's surface.

For a weapon and/or vehicle that can withstand the ocean's depth pressures and corrosiveness, the watertight canister **14** need not be provided. In such a case, the air bag inflators **16** can be attached directly to the weapon and/or vehicle without the use of a separate canister. Alternately, the individual watertight canisters **14** can be designed to withstand sea pressure to the full operational depths of the submarine. This would eliminate the need for the single large airtight pressure container **18**. However, it would require that the smaller canisters **14** be designed for continuous seawater immersion. The individual weapon and/or vehicle canisters may also be tethered to the large pressure container, or to the submarine, so that the canisters can be retracted back into the submarine, if necessary.

Air bag inflators **16** are used to lift the canisters **14** from the pressure container **12** using the buoyancy of air in water. One or more inflators **16** are preferably attached to the body **22** and/or top enclosure **24** of the individual canisters **14**. The air bag inflator **16** on the top enclosure **24** of the canister **14A** is preferably used to lift the canister out of the pressure

container during launch. First, the large container **12** is flooded, equalized in pressure, and the hatch **20** is opened.

Each air bag assembly **16** has an air bag **17A** and an inflator **17B** joined in communication with air bag **17A**. Air bag **17A** can be any fluid impermeable bag that is capable of being stowed in the available space. This bag can be made from Mylar, rubber, a polymer material or the like. In a first embodiment, the inflator **17B** can be a gas generator that is electrically activated to generate an inflation gas on receipt of an electrical signal. Gas generators are well known in the art of automobile air bag inflators. As an alternative, the inflator **17B** can be a compressed gas source having an electrically actuated valve that releases the compressed gas into air bag **17A** on receipt of a control signal. In either embodiment, inflator **17B** should provide sufficient gas to lift canister **14** at the operational depth while not providing excessive gas that could rupture air bag **17A**. Lifting air bag assemblies **16** must have a mechanism for coping with launches at depth and changing air pressures as the canister ascends. Stabilizing air bag assemblies **17C** can be activated near the surface and have less need to accommodate depth pressures.

Once the container **12** is opened the air bag or bags are deployed to raise the weapon and/or vehicle canister **14** out of the submarine and into the water environment for a wet launch,

or up to the ocean's surface for a dry launch. The buoyant force on the gas filled air bag provides the lift force to raise the weapon canister out of the container. Given that the weapon canisters contain air, and due to the buoyant force of water, the weapon canisters are relatively light in water and only a small lift force is necessary to raise the weapon canister. Once the weapon canister is a sufficient distance from the submarine, the top air bag **17A** and/or the inflator **17B** may be jettisoned and side air bag inflators may be deployed.

The side air bag inflators **17C** are preferably used during a dry launch to buoy the weapon canister the remaining distance up through the ocean water and to the ocean's surface. Once the ocean's surface is reached, the side air bags may be used to stabilize the canister as it floats, and may thereafter be used to stabilize the weapon during launch. After the weapon is launched, the air bag inflator and the weapon canister may remain on the ocean's surface until they can be recovered.

For a wet launch, the side air bags are not needed. During a wet launch, after the top air bag has removed the canister a safe distance from the submarine, the weapon or vehicle's own propulsion system preferably directs the weapon and/or vehicle toward its target. The top air bag can be jettisoned at that time.

A support framework **28** (FIGS. 2 and 3) may be provided to loosely hold the canisters **14** inside the larger containers **12**. A loose, non-rigid connection may preferably be provided between the canisters **14** and the support framework **28** in order to allow for easy loading and launching. A rigid connection is not needed, as the canisters **14** will be held in place by the normally vertical orientation of the submarine and the weight of the canisters. However, a soft, shock absorbent material may be used to cover the support framework and interior portions of the container in order to cushion the canisters during aggressive submarine maneuvers and shock loads.

Operation of the air bag launch assembly **10** will now be described with reference to the Figures.

Once a weapon launch is called for, the submarine assumes a position sufficiently close to the ocean's surface. The large watertight containers **12** are then filled with water to equalize its pressure with the surrounding ambient ocean conditions. The water will occupy the air space around the small weapon canisters **14** inside the large container **12**. When the pressure inside the large container **12** is balanced against the ambient ocean pressure, the top hatch **20** on the large container **12** is opened. Once the container **12** is opened, the air bag or bags are deployed to raise the weapon and/or vehicle canister **14** out of the submarine and into the water environment for a wet

launch, or up to the ocean's surface for a dry launch. As described above, the top air bags **17A** are preferably used to raise the canisters out of the containers. The side air bags **17C** are preferably used during a dry launch to ascend the weapon canister the remaining distance up through the ocean water and to the ocean's surface. Once the ocean's surface is reached, the side air bags may be used to stabilize the canister as it floats, and may thereafter be used to stabilize the weapon during launch. As previously noted, for a wet launch, the side air bags are not needed and the top air bag may be jettisoned when the weapon and/or vehicle's own guidance and propulsion system takes over. Preferably, the air bags are launched from a vertical position within the canisters. However, the air bags may also be sized to launch from many small angles from vertical. In doing so the air bag buoyant force merely has to overcome the frictional force and the weapon and/or vehicles weight to lift the weapon and/or vehicle out of the support framework.

As will be appreciated, the combination of a large watertight pressure container, a small airtight weapon canister, a support framework, and an air bag inflator represent an improved method of launching weapons underwater. The advantages of the launch assembly include; easy loading/unloading of weapons, increased weapon packing density, cost and weight

savings, and reliability advantages. The weapons can be loaded/unloaded individually or as an entire cartridge inside the support framework making them easy to load and unload. In either case, the weapon canister or weapons cartridge is simply lowered vertically into the large container or raised vertically out of it. Once loaded, the weapons are naturally secured in place due to their own weight, the designated space limitations, and the normally vertical orientation of the submarine.

Using the air bag launcher assembly also increases the packing density of the weapons. Given a higher packing density, either more weapons can be carried on a same size submarine or the same number of weapons can be carried on a smaller submarine. Current systems use individual pressure vessels for each weapon and large weapon launching systems such as gas generators, air turbine pumps, ram pumps, and elastomeric ejection systems. All these components occupy a significant amount of space. In contrast, one air bag inflator is small enough to fit into a person's hand.

The air bag launch assembly also eliminates the need for several complicated, expensive, and heavy components. If it is used to replace the existing torpedo tube weapon launching systems, several torpedo room components can be eliminated. Example components that may be eliminated include; impulse tanks, torpedo tubes, air turbine pumps, inlet cylinders,

shutter doors, high efficiency inlets, and the weapon loading and handling systems. If it is used to replace the existing vertical launch system components such as the gas generator, the individual thick walled pressure vessel, the individual capsule, the individual muzzle door, and the individual hydraulic systems can be eliminated. In addition, the air bag launch assembly will be less costly to maintain since there are fewer components that require servicing.

Since the air bag assembly has fewer components that make up the entire launch system it is expected to have increased reliability and reduced maintenance. Because the air bag launcher itself has no moving parts, the wearing of parts over time is not a concern. Air bag inflators have demonstrated such reliability that they are used in millions of automobiles for personnel safety. The other components that make up the air bag vertical launch system are also well understood and known to be reliable.

It will be understood that many additional changes in the details, materials, steps and arrangement of parts, which have been herein described and illustrated in order to explain the nature of the invention, may be made by those skilled in the art within the principle and scope of the invention as expressed in the appended claims.

Attorney Docket No. 82829

SUBMARINE AIR BAG LAUNCH ASSEMBLY

ABSTRACT OF THE DISCLOSURE

An air bag launch assembly is disclosed which allows for modular loading onto a submarine, the launch of weapons or vehicles external to the submarine pressure hull, while also achieving greater packing density. The air bag launch assembly includes a large, watertight pressure container; one or more smaller, watertight canisters used to contain the weapon or vehicle. The canisters are sized to fit within the larger pressure container. An air bag inflator is attached to the top and/or sides of the small canister to buoy the canister out of the container.

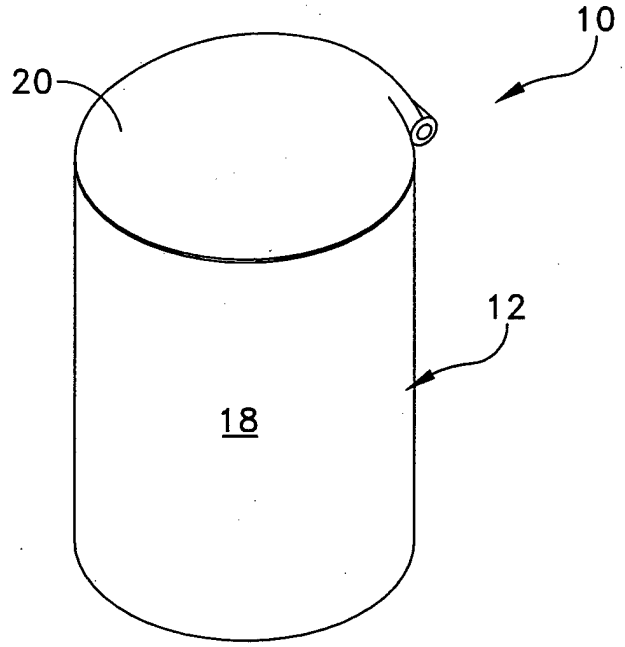

FIG. 1

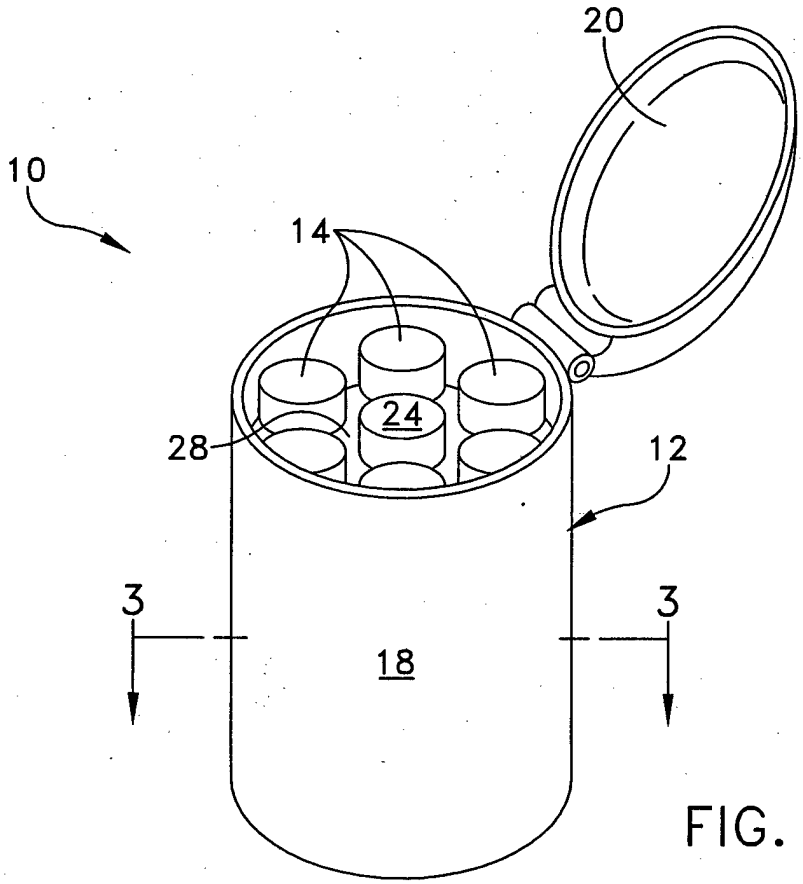

FIG. 2

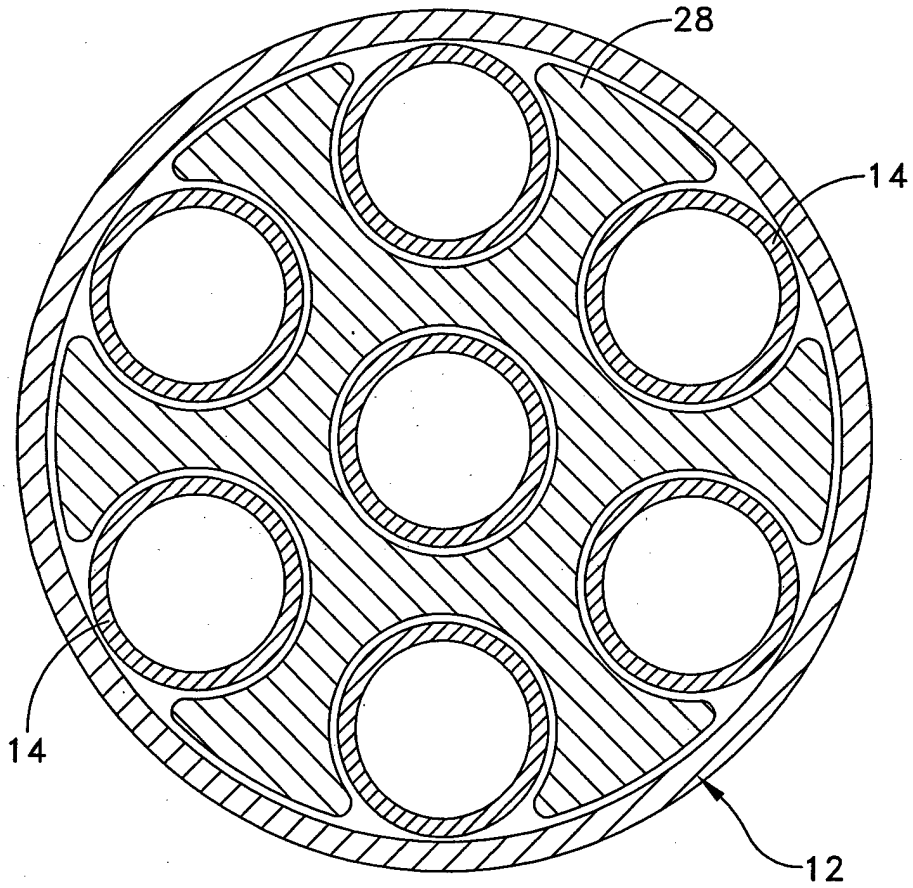

FIG. 3

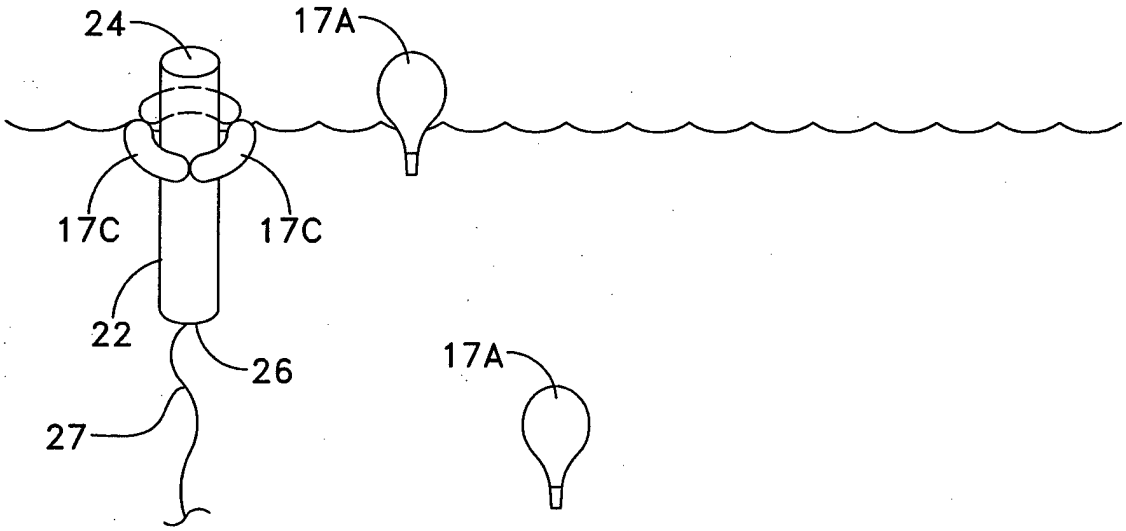
24
17A
17C
17C
22
26
17A
27

FIG. 4B

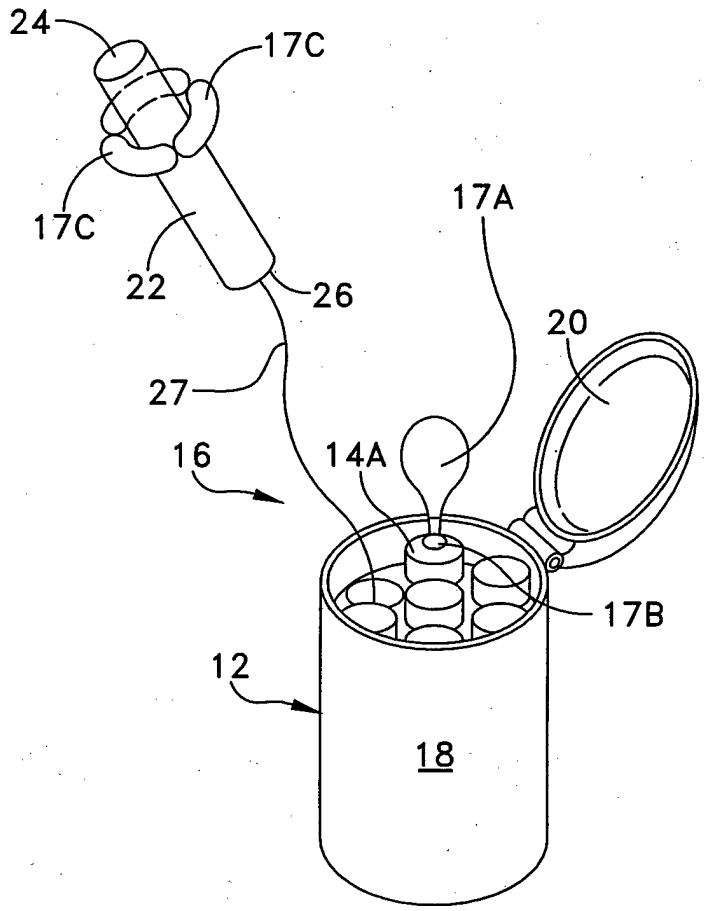
24
17C
17C
17A
22
26
20
27
16
14A
17B
12
18

FIG. 4A