DEPARTMENT OF THE NAVY

OFFICE OF COUNSEL
NAVAL UNDERSEA WARFARE CENTER DIVISION
1176 HOWELL STREET
NEWPORT RI 02841-1708

IN REPLY REFER TO:

Attorney Docket No. 82838
Date: 22 October 2003

The below identified patent application is available for licensing. Requests for information should be addressed to:

PATENT COUNSEL
NAVAL UNDERSEA WARFARE CENTER
1176 HOWELL ST.
CODE 00OC, BLDG. 112T
NEWPORT, RI 02841

Serial Number 10/600,728

Filing Date 6/23/03

Inventor Michael T. Ansay

If you have any questions please contact James M. Kasischke, Deputy Counsel, at 401-832-4736.

Attorney Docket No. 82838

AN ASSEMBLY FOR SELF-PROPELLED MOVEMENT FROM A RELEASE POSITION BENEATH A WATER SURFACE

TO ALL WHOM IT MAY CONCERN:

BE IT KNOWN THAT (1) MICHAEL T. ANSAY, and (2) JOHN R. LITTLE, citizens of the United States of America, employees of the United States Government, and residents of (1) Johnston, County of Providence, State of Rhode Island, and (2) Swansea, County of Bristol, Commonwealth of Massachusetts, have invented certain new and useful improvements entitled as set forth above, of which the following is a specification.

JAMES M. KASISCHKE, ESQ.
Reg. No. 36562
Naval Undersea Warfare Center
Division, Newport
Newport, RI 02841-1708
TEL: 401-832-4736
FAX: 401-832-1231

20031121 099

DISTRIBUTION STATEMENT A
Approved for Public Release
Distribution Unlimited

23523
PATENT TRADEMARK OFFICE

Attorney Docket No. 82838

AN ASSEMBLY FOR SELF-PROPELLED MOVEMENT FROM A RELEASE POSITION BENEATH A WATER SURFACE

STATEMENT OF GOVERNMENT INTEREST

The invention described herein may be manufactured and used by or for the Government of the United States of America for Governmental purposes without the payment of any royalties thereon or therefor.

BACKGROUND OF THE INVENTION

(1) Field of the Invention

The invention relates to the launch of bodies from submarines at various depths, and is directed more particularly to the launch of bodies, such as weapons, vehicles, and the like, from locations outside the pressure hulls of the submarines.

(2) Description of the Prior Art

The United States Navy has expressed a need to carry greater payloads of weapons/vehicles on submarines and a need to launch weapons/vehicles from modular, external, payload bays. Traditionally, such bodies have been stowed inside submarine torpedo rooms, protected from the pressure and corrosiveness of the ocean environment, and then launched from the submarine torpedo tubes when needed.

A vertical air bag launcher has been considered as one method for launching a body externally, without the need for a traditional torpedo room. However, a primary concern with using air bags underwater is the large variation in submarine operating depths. Because of the large variations in depth pressure, a normal air bag inflator is unable to consistently fill an air bag to the same volume. An air bag inflator that produces a given amount of pressurized gas will fill a relatively small volume at deep depth pressures and a relatively large volume at shallow depth pressures. As a result, the air bag buoyant lift force will be much less when deployed at deep depths than at shallow depths.

If an air bag inflator is sized for the greatest expected depth pressure, it will rupture the bag when deployed at a shallow depth. If it is sized for a very shallow depth, it will not fill the air bag to the proper volume, or it may not deploy, at deep depths. In order to use air bags to launch weapons underwater, the air bag launcher must be able to compensate for all submarine operating depths.

There is thus a need for an air bag launch system in which the air bag is filled to a proper volume at all operating depths.

SUMMARY OF THE INVENTION

An object of the invention is, therefore, to provide an air bag launch assembly in which the air bag is filled to a volume

sufficient to provide ascent of the bag and a body connected thereto, and which is adapted to adjust the pressure therein as the assembly ascends toward the surface so as to provide the required buoyancy while not permitting the bag to expand beyond its limits.

With the above and other objects in view, a feature of the present invention is the provision of an assembly for self-propelled movement from a release position beneath a water surface to a second position closer to the water surface. The assembly includes a body whose function includes moving from the release position to the second position, an air bag connected to the body, a differential pressure relief valve in communication with the air bag, and an air source in communication with the air bag. The air source is adapted to provide air to the air bag to inflate the air bag to lift the body toward the second position, and the pressure relief valve is operative to maintain a selected pressure differential in the air bag relative to outside water pressure.

The above and other features of the invention, including various novel details of construction and combinations of parts, will now be more particularly described with reference to the accompanying drawings and pointed out in the claims. It will be understood that the particular assembly embodying the invention is shown by way of illustration only and not as a limitation of the invention. The principles and features of this invention may

be employed in various and numerous embodiments without departing from the scope of the invention.

BRIEF DESCRIPTION OF THE DRAWINGS

Reference is made to the accompanying drawings in which is shown an illustrative embodiment of the invention, from which its novel features and advantages will be apparent, and wherein:

FIG. 1 is a diagrammatic side elevational view of one form of assembly illustrative of an embodiment of the invention; and

FIG. 2 is a generally sectional view of a portion of the assembly of FIG. 1.

DESCRIPTION OF THE PREFERRED EMBODIMENTS

Referring to FIGS. 1 and 2, it will be seen that the assembly includes an air bag 10 of a material that is compatible with seawater and strong enough to support the weight, in water, of a selected weapon, canister containing a weapon, or other body 12.

The assembly further includes a housing 14 fixed to the air bag 10. The housing 14 is provided with one or more differential pressure relief valves 16 which serve to maintain a selected differential pressure between the air inside the air bag 10 and the water pressure outside the air bag.

Preferably, a gas generator 18 is disposed in the housing 14. The housing 14 is provided with a supply conduit 20 which conveys gas, typically air, to the air bag 10.

The air bag 10 is of a material that is flexible enough to be collapsed into a small volume but strong enough to support the weight, in water, of the weapon and canister it is intended to lift. The volume of the air bag 10 is sized to provide a buoyant lift force that sufficiently exceeds the weight of the weapon, housing, and any other resistive weight or force that could prevent ascension of the assembly. The air bag thickness is selected by the amount of differential air pressure it is designed to contain. The air bag is also able to endure the corrosiveness and other operating conditions in the ocean environment.

The air bag inflator preferably comprises the small gas generator 18. The gas generator 18 can be similar to any commercially available gas generator such as those utilized to inflate automobile air bags. The air bag inflater can also be a compressed gas cylinder as is well known in the art. It is sized to produce a sufficient amount of gas to fill the air bag at the greatest operating depth of the submarine. The air bag volume remains the same at all depths, but the pressure inside the air bag varies as a function of depth. At deep depths the air bag contains high pressure, while at shallow depths it contains low pressure. Thus, the gas generator 18 is sized to fill the air

bag 10 to the desired volume at the deepest operating depth of the submarine. Any excess gas produced by the air bag inflator is vented outside into the ocean environment via the pressure relief valve mechanism 16.

The air bag inflator, i.e., the gas generator 18, is triggered when a launch is desired. An electrical signal is used to start the gas generator. Once operation of the gas generator is initiated, the air bag begins to fill. When the air bag reaches a volume large enough to produce a sufficient buoyant lift force, the weapon/vehicle and canister, if present, are lifted away from the submarine.

The gas generator 18 always produces the same amount of gas, even though a different quantity is required for each depth. At the deepest anticipated launch depth, the gas generator produces enough gas to just fill the air bag or slightly overfill it. At more shallow depths the air bag inflator will produce more gas than necessary. To ensure that the air bag is not over inflated, the excess gas is released by the pressure relief valve mechanism 16.

The pressure relief valve mechanism incorporates at least one pressure relief valve 16 (FIG. 2) that is sized to maintain a specific differential pressure inside and outside the air bag. Pressure relief valve 16 is positioned in an outlet passageway 21 in the housing 14. One side 22 of the relief valve 16 is exposed to sea pressure and the other side 24 is exposed to the internal

air bag pressure. Once the air bag pressure exceeds the outside sea pressure by the desired differential pressure, the relief valve 16 will lift off its seat and discharge the excess gas pressure into the ocean environment.

The air bag inflator 18 provides for a constant lift force at all depths. This is ensured by the pressure compensation mechanism 16 that inflates the air bag to the same volume at all launch depths. As a result, the launch performance is consistent as a function of depth. Other weapon launch systems require depth pressure equalization before a launch to ensure consistent performance. The underwater air bag launch described herein is depth pressure independent so it does not require depth pressure equalization prior to launch. Therefore, the underwater air bag launcher provides consistent launch performance at all depths and does not require pre-launch depth pressure equalization.

The underwater air bag launch assembly can be sized easily to accommodate various weapon/vehicle sizes. This is accomplished by simply adjusting the size of the air bag and the amount of fuel in the gas generator. In the same manner, the underwater air bag launcher can be sized to provide various launch performances as well.

As is understood from the above, the underwater air bag launch assembly is defined by only a few components, which translates into increased reliability and reduced maintenance. Inasmuch as the underwater air bag launch assembly has few moving

parts, the wearing of parts over time is not a concern. Air bag inflators have demonstrated such reliability that they are used in millions of automobiles for personnel safety. The other components that make up the air bag vertical launch system are also well understood and known to be reliable.

The underwater air bag launcher can be used as a safety device for submarines or submersible vehicles. Underwater air bags can be attached externally to submarine hulls and designed to employ before the submarine sinks to an unsafe crush depth. Once deployed, the added buoyant force can be used to help ascend the submarine back to a safe depth. The system herein described can also be used to retrieve missiles which are used for test purposes and are often lost in the oceans.

FIG. 2 shows the air bag attached to the top of the housing 14 having a gas generator 18 therein. However, the gas generator may be remotely located, as opposed to being part of the air bag assembly, by piping the gas from the gas generator to the air bag (not shown).

There is thus provided an air bag launch assembly in which the air bag pressure is initially limited to that which is required to lift the assembly and its payload, and in which the air bag pressure is thereafter regulated during ascent to provide the required buoyancy while not permitting the bag to expand beyond its limits.

It will be understood that many additional changes in the details, materials, steps and arrangement of parts, which have been herein described and illustrated in order to explain the nature of the invention, may be made by those skilled in the art within the principles and scope of the invention as expressed in the appended claims.

Attorney Docket No. 82838

AN ASSEMBLY FOR SELF-PROPELLED MOVEMENT FROM A RELEASE POSITION BENEATH A WATER SURFACE

ABSTRACT OF THE DISCLOSURE

An assembly for generating buoyancy for an attached self-propelled body for movement from a release position beneath a water surface to a second position closer to the water surface includes an air bag connected to the body, a differential pressure relief valve in communication with the air bag, and a gas source in communication with the air bag. The source provides gas to the air bag to inflate the air bag to lift the body toward the second position, and the pressure relief valve is operative to maintain a selected pressure differential in the air bag relative to outside water pressure.

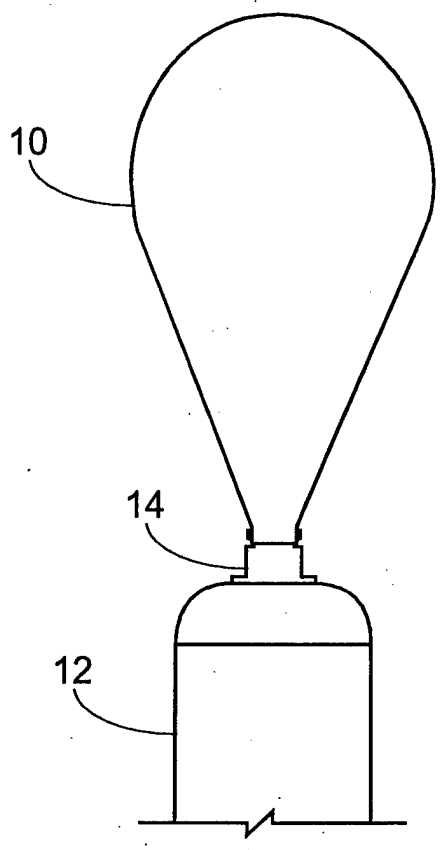

FIG. 1

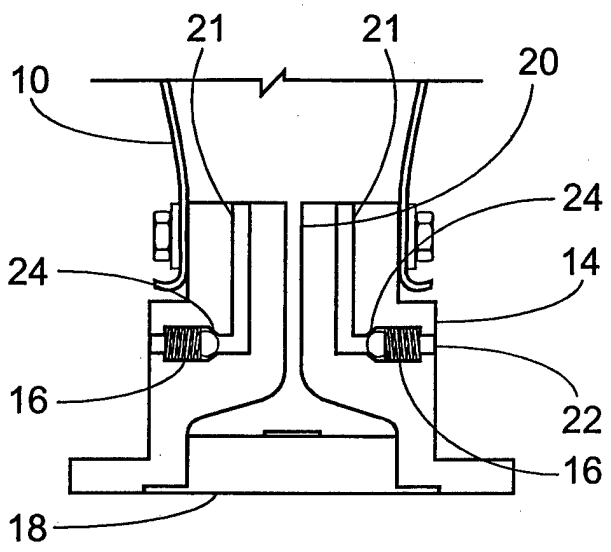

FIG. 2