(2)

WT-1690(EX)
EXTRACTED VERSION

OPERATION HARDTACK

Report to the Scientific Director

Power-Time and Total-Thermal Measurements

AD-A995 381

D. F. Hansen
J. E. Perry
A. G. Rockman
Naval Research Laboratory
Washington, DC

DTIC
ELECTE
FEB 27 1986
S D
D

February 1960

NOTICE:
This is an extract of WT-1690, Operation HARDTACK.

DTIC FILE COPY

Approved for public release;
distribution is unlimited.

Extracted version prepared for
Director
DEFENSE NUCLEAR AGENCY
Washington, DC 20305-1000

1 September 1985

86 2 26 015

Destroy this report when it is no longer needed. Do not return to sender.

PLEASE NOTIFY THE DEFENSE NUCLEAR AGENCY, ATTN: STTI, WASHINGTON, DC 20305-1000, IF YOUR ADDRESS IS INCORRECT, IF YOU WISH IT DELETED FROM THE DISTRIBUTION LIST, OR IF THE ADDRESSEE IS NO LONGER EMPLOYED BY YOUR ORGANIZATION.

DNA PRINTING PLANT

DISCLAIMER NOTICE

THIS DOCUMENT IS BEST QUALITY PRACTICABLE. THE COPY FURNISHED TO DTIC CONTAINED A SIGNIFICANT NUMBER OF PAGES WHICH DO NOT REPRODUCE LEGIBLY.

UNCLASSIFIED

SECURITY CLASSIFICATION OF THIS PAGE

AD-A995 381

REPORT DOCUMENTATION PAGE

1a REPORT SECURITY CLASSIFICATION UNCLASSIFIED	1b RESTRICTIVE MARKINGS
2a SECURITY CLASSIFICATION AUTHORITY N/A since Unclassified	3 DISTRIBUTION/AVAILABILITY OF REPORT Approved for public release; distribution is unlimited.
2b DECLASSIFICATION/DOWNGRADING SCHEDULE N/A since Unclassified	
4 PERFORMING ORGANIZATION REPORT NUMBER(S)	5 MONITORING ORGANIZATION REPORT NUMBER(S) WT-1690 (EX)
6a NAME OF PERFORMING ORGANIZATION Naval Research Laboratory — 6b OFFICE SYMBOL (If applicable)	7a NAME OF MONITORING ORGANIZATION Defense Atomic Support Agency
6c ADDRESS (City, State, and ZIP Code) Washington, DC	7b ADDRESS (City, State, and ZIP Code) Washington, DC
8a NAME OF FUNDING/SPONSORING ORGANIZATION — 8b OFFICE SYMBOL (If applicable)	9 PROCUREMENT INSTRUMENT IDENTIFICATION NUMBER
8c ADDRESS (City, State, and ZIP Code)	10 SOURCE OF FUNDING NUMBERS PROGRAM ELEMENT NO / PROJECT NO / TASK NO / WORK UNIT ACCESSION NO

11 TITLE (Include Security Classification)
OPERATION HARDTACK, Report to the Scientific Director, Power-Time and Total-Thermal Measurements, Extracted Version

12 PERSONAL AUTHOR(S)
D. F. Hansen, J. E. Perry, and A. G. Rockman

13a TYPE OF REPORT	13b TIME COVERED FROM ____ TO ____	14 DATE OF REPORT (Year Month, Day)	15 PAGE COUNT
		600201	48

16 SUPPLEMENTARY NOTATION This report has had sensitive military information removed in order to provide an unclassified version for unlimited distribution. The work was performed by the Defense Nuclear Agency in support of the DoD Nuclear Test Personnel Review Program.

17 COSATI CODES			18 SUBJECT TERMS (Continue on reverse if necessary and identify by block number)
FIELD	GROUP	SUB-GROUP	Hardtack
18	3		Thermal Measurements
20	13		Power-Time Instrumentation

19 ABSTRACT (Continue on reverse if necessary and identify by block number)

The objective of the experiments reported in this volume was to determine the very high altitude behavior of two nuclear explosions, namely, the thermal power versus time and the total thermal yield.

The power-time measurements were performed with four bolometers-chopper units. A large dynamic range was provided both electronically and by neutral filters. The total thermal yield of the Teak Shot was measured by thermopile-recorder systems. The total thermal yield for Orange Shot could not be determined because of the cloud cover present over Johnston Island.

20 DISTRIBUTION/AVAILABILITY OF ABSTRACT ☒ UNCLASSIFIED/UNLIMITED ☐ SAME AS RPT ☐ DTIC USERS	21 ABSTRACT SECURITY CLASSIFICATION UNCLASSIFIED
22a NAME OF RESPONSIBLE INDIVIDUAL MARK D. FLOHR	22b TELEPHONE (Include Area Code) (202) 325-7559 — 22c OFFICE SYMBOL DNA/ISCM

DD FORM 1473, 84 MAR — 83 APR edition may be used until exhausted. All other editions are obsolete.

SECURITY CLASSIFICATION OF THIS PAGE
UNCLASSIFIED

FOREWORD

Classified material has been removed in order to make the information available on an unclassified, open publication basis, to any interested parties. The effort to declassify this report has been accomplished specifically to support the Department of Defense Nuclear Test Personnel Review (NTPR) Program. The objective is to facilitate studies of the low levels of radiation received by some individuals during the atmospheric nuclear test program by making as much information as possible available to all interested parties.

The material which has been deleted is either currently classified as Restricted Data or Formerly Restricted Data under the provisions of the Atomic Energy Act of 1954 (as amended), or is National Security Information, or has been determined to be critical military information which could reveal system or equipment vulnerabilities and is, therefore, not appropriate for open publication.

The Defense Nuclear Agency (DNA) believes that though all classified material has been deleted, the report accurately portrays the contents of the original. DNA also believes that the deleted material is of little or no significance to studies into the amounts, or types, of radiation received by any individuals during the atmospheric nuclear test program.

Accesion For	
NTIS CRA&I	✓
DTIC TAB	☐
Unannounced	☐
Justification	
By	
Distribution /	
Availability Codes	
Dist	Avail and / or Special
A-1	23

UNANNOUNCED

Report to the Scientific Director

POWER-TIME AND TOTAL-THERMAL MEASUREMENTS

By
D. F. Hansen
J. E. Perry
A. G. Rockman

Optics Division
Naval Research Laboratory
Washington, D. C.
February 1960

ABSTRACT

Thermal power as a function of time and total thermal yield measurements were made on Teak and Orange shots at Operation Hardtack (Newsreel). The power-time measurements were performed with four bolometer-chopper units. A large dynamic range was provided both electronically and by neutral filters. Because of scaling, only one bolometer system provided good results on Teak shot, while two did on Orange shot. The first 10 μsec of these records is ambiguous because of a blocking action produced in the amplifier of each system by a fiducial marker generator. The data after that time indicate that the thermal power for Orange showed a slight "minimum" which in surface detonations is a pronounced characteristic. Teak shot at twice the altitude, or 250,000 feet, showed no trace of a minimum. Its thermal output rose to a maximum and decayed almost exponentially. The total thermal yield of Teak shot was as measured by thermopile-recorder systems. Thermal energy incident on the ground at Johnston Island from Teak shot was and for Orange shot The total thermal yield for Orange could not be determined because of the cloud cover present over Johnston Island.

PREFACE

This is a final report on power-time and total-thermal measurements made at Operation Hardtack-Newsreel on Teak and Orange shots. The results of these experiments presented in NRL Preliminary Field Reports, No. RD/00870 and No. RD/00874, are herewith superseded.

ACKNOWLEDGMENTS

The material presented in this report is part of the optical studies conducted under Program 18 by the U.S. Naval Research Laboratory in behalf of the Los Alamos Scientific Laboratory for Operation Hardtack-Newsreel.

The preliminary work at NRL was performed under the direction of Dr. H. S. Stewart. Dr. H. Hoerlin of LASL, program director, provided guidance in the field. We wish to specifically acknowledge the assistance of Mr. W. Gould of LASL in the total-thermal final field calibrations and that of Mr. L. Knestric in the preliminary NRL calibrations. Mr. F. E. Carpenter of NRL deserves special credit for the long, laborious task of evaporating the many platinum-on-quartz scaling filters used for both the power-time and total-thermal systems.

CONTENTS

Abstract 5

Preface 6

Acknowledgments 6

1. BACKGROUND 11

2. OBJECTIVE 12

3. INSTRUMENTATION 14

3.1 Power-Time Instrumentation 14

3.1.1 General Concept of the Power-Time System 14

3.1.2 The Bolometer Elements 16

3.1.3 The Bolometer Chopper Unit 20

3.1.4 The Recorder Amplifier 22

3.1.5 The Recorder Unit 23

3.1.6 The Fiducial Marker 23

3.1.7 The Automatic Timing Unit 24

3.1.8 The Data Readout Equipment 25

3.1.9 The External Optical System 25

3.2 Total-Thermal Instrumentation 26

3.2.1 General Concept of the Total-Thermal System 26

3.2.2 The Eppley Thermopile 28

3.2.3 The Brown Recording Potentiometer 28

3.2.4 The External Optical System 30

4. CALIBRATIONS 31

4.1 Calibration of the Power-Time System 31

4.2 Calibration of the Total-Thermal System 31

4.2.1 General Procedure 31

4.2.2 Calibration of Secondary Standard Lamps 32

4.2.3 The Total Radiant Flux Standard 32

4.2.4 The Brown Recorder Characteristics 33

4.2.5 Calibration of the Working Thermopiles 33

4.2.6 Scaling of the Working Thermopiles 36

5. RESULTS. 40

5.1 Power-Time Measurements 40

5.2 Total-Thermal Measurements 45

5.2.1 Transmission of the Atmosphere 45

5.2.2 Teak Total-Thermal Measurements 50

5.2.3 Thermal Energy Received at Johnston Island – Teak Shot 52

5.2.4 Orange Total-Thermal Measurements 52

REFERENCES 54

TABLES

4.1 Calibration Factors of the Working Thermopiles 34

4.2 Thermopile Range of Coverage Assignments 37

4.3 Expected Incident Thermal Energy 38

4.4 Volt-Seconds Required for Full-Scale Response 39

4.5 Energy Equivalent to Maximum Deflection 39

4.6 Attenuation for Scaling to Coverage Assignment 39

4.7 Scaling Filters Used With the Thermopiles 40

5.1 Mean Transmission of 1 Air Mass at Johnston Island 50

5.2 Total Thermal Yield of Teak Shot 51

FIGURES

3.1 Power-time recording equipment. 15

3.2 Power-time data readout equipment 15

3.3 The bolometer bridge circuit 17

3.4 The bolometer chopper unit 21

3.5 Automatic timing and sequence units 24

3.6 Wavelength behavior of optical components and the atmosphere 27

3.7 The Eppley circular thermopile 29

3.8 The Eppley circular thermopile 30

4.1 Typical total-thermal calibration trace 35

5.1 Teak power-time records 42

5.2 Orange power-time records 43

5.3 Spurious attenuation factor versus time 45

5.4 Teak power-time data, G-B system 46

5.5 Orange power-time data, G-B system 47

5.6 Orange power-time data, G-T system 48

5.7 Teak total-thermal records 53

OPERATION HARDTACK-NEWSREEL POWER-TIME AND TOTAL-THERMAL MEASUREMENTS

1. BACKGROUND

Over a span of many years in the field of nuclear tests, some of the now commonplace experiments have had names associated with them that are in a sense jargon or at best a rather loose description of the experiment. The two classes of measurements with which this report deals fall into that category. Their now-familiar names are "power-time" and "total-thermal." A more strict definition of each would be "thermal power as a function of time" and "total thermal yield" - as applied to nuclear detonations. Since the abbreviated forms are now well entrenched, this report will often refer to them in that manner.

Total-thermal measurements have a history extending back to the first or Trinity shot at Alamagordo, New Mexico. For the measurements on that shot and the very early operations, Crossroad, Sandstone, and Greenhouse, the reader is referred to a résumé provided in NRL Report 5352 (Reference 1). These and later measurements indicate that upwards of 30 percent of the total yield of a nuclear explosion appears within a few seconds as thermal radiation. Such a large fraction of the entire energy cannot help but be of military significance. Thus, the total-thermal measurement is made on almost all nuclear detonations.

The rate at which this thermal energy is released (or the power-time) is also significant. From the time of occurrence of certain characteristic features such as the "first maximum," the "minimum," and the "second maximum," important scaling laws have been deduced. Having these scaling laws and only a relative power-time curve, for example, one can deduce the total yield of a surface explosion quite accurately.

For high-altitude explosions the behavior of these thermal phenomena, especially the power-time, was expected to be quite different. With the present-day capability in the field of rocketry it continues to be quite necessary to determine the thermal features of the detonations, but now as a function of altitude. The two shots Teak and Orange which took place during the Newsreel phase of Operation Hardtack at Johnston Island provided the first opportunity to perform thermal measurements on very high altitude detonations.

2 OBJECTIVE

The thermal characteristics of nuclear explosions at the earth's surface have been studied extensively and are fairly well understood. A few high-altitude events had occurred prior to the Newsreel phase of Operation Hardtack, mostly by air drop, but none at the altitude planned for Teak and Orange shots. The altitude selected for Teak shot was 250,000 feet and for Orange 125,000 feet. At these very high altitudes the characteristics of the explosions were expected to be quite different from surface or lower altitude explosions. The objective of the experiments reported here was to determine the very high altitude behavior of two of these characteristics, namely, the thermal power versus time and the total thermal yield.

A nuclear explosion becomes, within a short interval of time, a large extended source of thermal energy. However, it can be shown

that the amount of this thermal energy reaching a detector some distance away is exactly equivalent to that which would have been received from a point source releasing the equivalent amount of energy. To simplify the calculations, therefore, the measurements performed are related back to a hypothetical point source of energy release.

The wavelength range which is taken to constitute thermal energy may, of course, be subject to question. For the purposes of this report, it is taken to be those radiations between 0.2 and 10 microns. The energy detectors to be described are approximately uniform in sensitivity over this range, but the atmospheric transmission may vary markedly with wavelength. Various methods of measuring the atmospheric transmission and allowing for its variation with wavelength were used on previous operations (References 2 and 3). Teak and Orange burst altitudes were located above the atmospheric ozone layer. The lower wavelength limit of the thermal measurements was therefore automatically set at 0.29 micron by the ozone cutoff.

If Y(t) represents the thermal power radiated by the hypothetical point source explosion, in watts, then the irradiance H(t) at a distance d cm from the explosion is given by

$$H(t) = \frac{Y(t)\, T_A}{4\pi d^2} \quad \text{watts/cm}^2 \tag{2.1}$$

where T_A is the mean atmospheric transmittance. The irradiance H(t) is the function measured by the power-time equipment. The time integral of the above expression

$$E = \int_0^\infty H(t)\, dt \qquad \text{joules/cm}^2 \tag{2.2}$$

gives the total amount of energy per unit area received by a detector at a distance d from the explosion. This is the quantity measured by the

total-thermal equipment. Once the atmospheric transmission is determined, the total thermal yield Y, given by

$$Y = \int_0^{\infty} Y(t)\, dt \quad \text{joules,} \tag{2.3}$$

can be calculated.

3. INSTRUMENTATION

3.1 Power-Time Instrumentation

3.1.1 General Concept of the Power-Time System

The bolometer system used to measure the thermal power versus time of the Teak and Orange shots was developed in 1950 by the Radiometry Branch* of the U.S. Naval Research Laboratory (NRL). These same systems were used to record power-time data at Operation Greenhouse and nearly every operation in the intervening years (Reference 4).

Schematically, the method of recording data is shown in Figure 3.1. Thermal energy from the nuclear explosion is incident upon the bolometer element of a "bolometer chopper" unit. The chopper unit chops, or modulates the radiant energy; the resultant electrical signal is then fed to an ac amplifier and thence to a fast magnetic tape recorder. Simultaneously, the thermal energy is used to create a fiducial time marker by triggering a photoelectric detector whose output is amplified and recorded on the same magnetic tape.

To obtain the data signal from the magnetic tape, the equipment illustrated by block diagram form in Figure 3.2 is used. The tape is played back through a Rangertone readout unit whose output signal is displayed on a cathode-ray oscilloscope. A Fairchild oscilloscope camera of the continuously moving film type is used to photograph the oscillographic display.

*Subsequently divided into the Radiometry I Branch and the Radiometry II Branch.

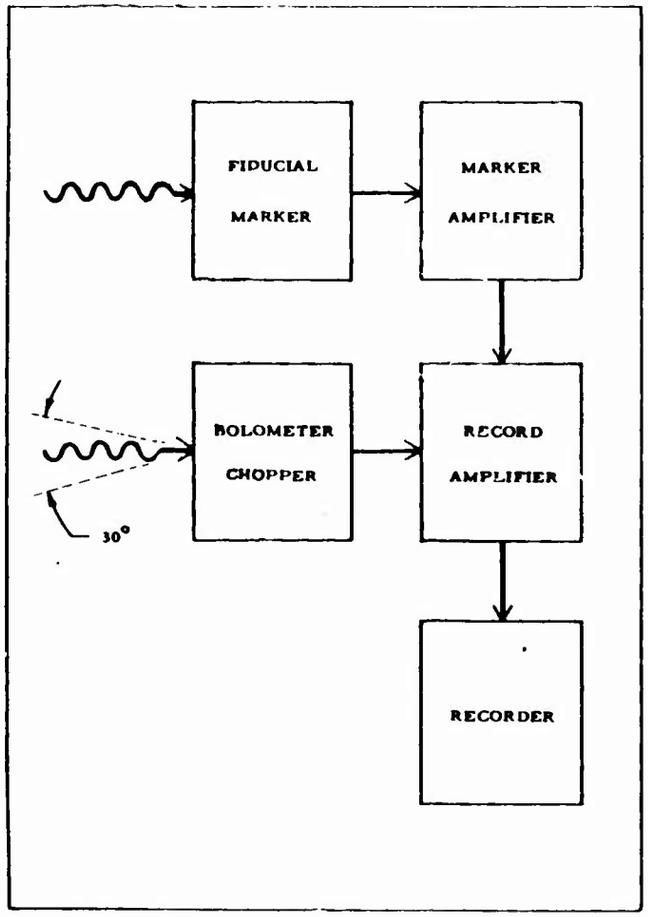

Figure 3.1 Equipment used to record the power-time signal

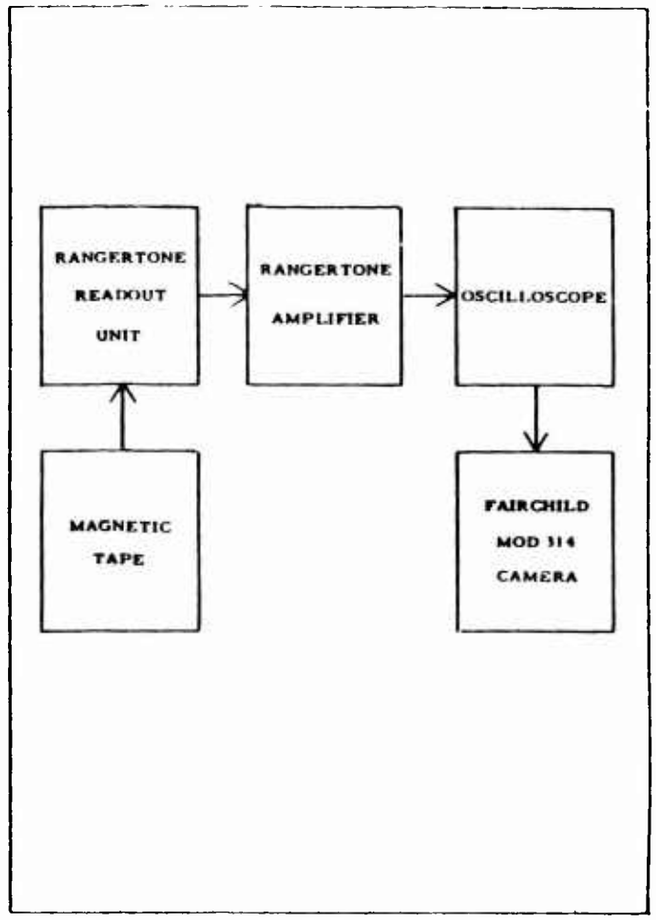

Figure 3.2 Equipment used to read out data signals from the magnetic tape

The frequency at which the thermal signal is modulated by the chopper unit can serve as time base on the data signal. Thus, it becomes a simple matter to extract the data from the film by measurement of amplitude versus number of cycles. To place the signal amplitude on an absolute incident power scale requires that an absolute radiant energy calibration be performed on the system. Though such a calibration is usually performed, it is used only as a rough check on the system performance. Calibration lamps, even of very high power output, produce a signal in the system which is only slightly above the background noise and thus would give a very poor absolute scale. An accurate method of arriving at the absolute scale for the power-time data can be obtained from the total-thermal measurements to be described later. The integral of the power-time curve is, of course, the total thermal signal, which can more easily be placed on an absolute basis.

3.1.2 The Bolometer Elements

Bolometer elements for the power-time equipment were obtained from Baird Associates, Inc. The bolometer bridge circuits were fabricated at NRL. The bridge circuit, as shown in Figure 3.3, consists of two identical bolometer elements in parallel with resistors whose resistance is chosen to match the individual resistance of a bolometer element.

The pair of bolometer elements are so placed that each faces the direction of incoming thermal radiation and receives flux over the same solid angle. The chopping action of the flux is performed by a rotating disk with holes near its periphery. The spacing of the bolometer elements and the size of the holes are so chosen as to allow flux to fall on each element in succession. Thus, while one element is being subjected to the thermal flux the other is masked off and vice-versa. Each bolometer element is 1.0 mm long and 0.2 mm wide. The spacing between

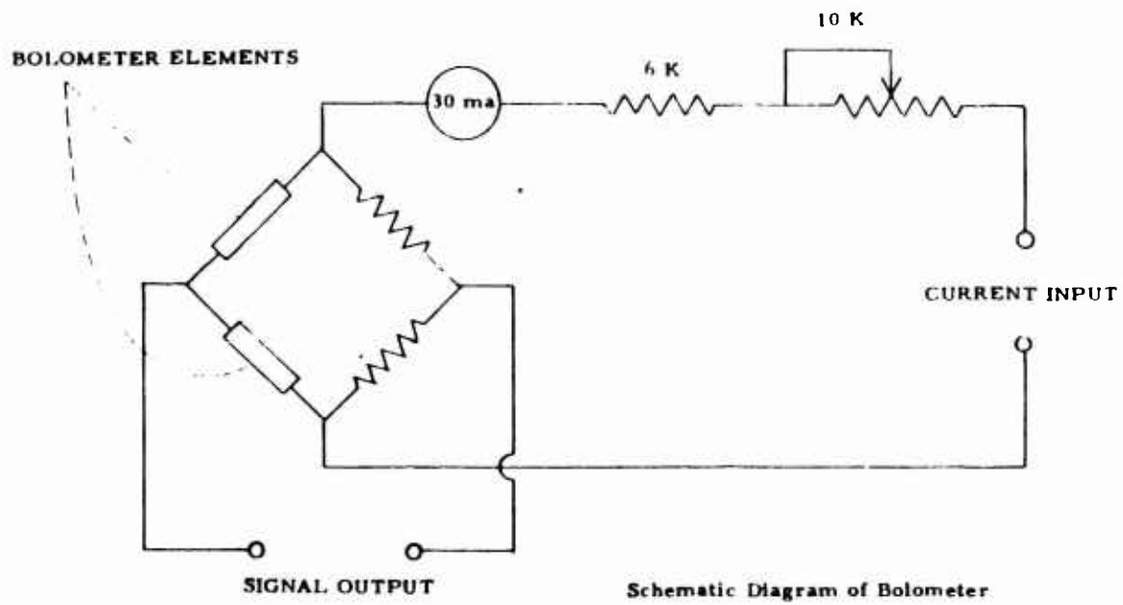

Schematic Diagram of Bolometer

Figure 3.3 The bolometer bridge circuit, and a photograph of the bolometer housing

the pair is 2.5 mm. The average characteristics of an element are as follows:

Operating resistance: 5 ohms

Current carrying capacity: 20 ma

Noise: less than 3.5×10^{-9} rms volt per 10-cps bandwidth

Time constant: 1.2 to 1.4 ms

Output: 1.0 rms volt per watt at 30 cps

The spectral sensitivity of the bolometer elements is nearly flat over a range from 0.2 to 10.0 microns. A calcium fluoride window covers the entrance to the bolometer housing in order to protect the elements from the air being fanned by the chopper.

The time resolution of the power-time equipment is taken to be 20.8 microseconds. To see how this excellent resolution is obtained with bolometer elements having time constants of the order of 1.2 milliseconds, one must refer to the fundamental mathematical description of the receiving element. Given a constant irradiance H in joules/cm^2-sec, incident upon an inert body, the basic heat balance equation may be solved to give (Reference 5)

$$\theta' = \theta - \theta_o = \frac{a\,A\,H}{h}\left(1 - e^{-\alpha t}\right) \tag{3.1}$$

where

θ_o = ambient temperature (^oC)

θ = average temperature (^oC)

a = absorptivity of receiver

A = irradiated area (cm^2)

h = heat loss coefficient of receiver (joules/sec-^oC)

t = time (sec).

The decay constant α is defined by

$$\alpha = h/MC \text{ sec}^{-1} \tag{3.2}$$

where

M = mass of receiver (gm)

C = specific heat of receiver material (joules/gm-^{o}C)

Now the decay constant is also the reciprocal of the time constant τ:

$$\alpha = 1/\tau \ \text{sec}^{-1} \tag{3.3}$$

so that the time constant is the time necessary for the response of the system to reach $1 - e^{-1}$ or 63 percent of its final value. Since the time constant of the bolometer elements is about 1.2 ms, the decay time $\alpha = 834 \ \text{sec}^{-1}$.

Equation (3.1) may be expanded to give

$$\theta' = \frac{aAHt}{MC}\left(1 - \frac{\alpha t}{2} + \frac{(\alpha t)^2}{6} - \ldots\right) {}^{o}\text{C}. \tag{3.4}$$

If the time t during which the bolometer element is exposed to the constant irradiance H is so short that αt is very small, θ' is given approximately by

$$\theta' = \frac{aAHt}{MC} \ {}^{o}\text{C}. \tag{3.5}$$

Using the decay constant ($\alpha = 834 \ \text{sec}^{-1}$) and exposure time (20.8 μsec) for the bolometer system under discussion, one sees that the error involved in substituting Equation (3.5) for (3.4) amounts to only about one percent. Thus, it is shown that the temperature rise of the bolometer element over the time of exposure is linear with time for a constant irradiance.

The linearity of system response with time also assumes that the specific heat of the bolometer material is constant over the range of use and that the temperature coefficient of resistivity over the temperature range used is linear with temperature, both reasonably good assumptions in the present system.

So far, the treatment has explained the system response only for the case of constant irradiance H. However, the thermal power output from a nuclear test will produce an irradiance H(t) at the receiver which varies with time. That the system will respond properly to give the

true shape of the thermal signal depends upon the rate at which the thermal signal is changing. In the case of nuclear tests, the fastest rise and decay times are usually of the order of milliseconds, in which case the irradiance during the exposure time of 20.8 μsec can be taken to be constant and the above treatment is valid. The envelope of the oscillatory signal is then proportional to the true power-time output of the explosion. Either the positive or negative envelope may be used to represent the data signal; it is usually unnecessary to extract data from both envelopes. Since the time between maximum amplitudes of only one polarity is twice the exposure time, the time resolution of the system is taken to be 41.6 μsec.

The manner in which the bolometers are used in the power-time system is an unusual application of this type of detector. In order to gain signal linearity the system sensitivity has been sacrificed to a very great extent. Since the systems were designed entirely for use on nuclear weapons tests, the lack of sensitivity is not a problem - for nuclear detonations provide an abundance of signal. Absolute calibrations, however, become a problem, because standard lamps do not provide sufficient flux to give adequate signal-to-noise ratios.

3.1.3 The Bolometer Chopper Unit

The bolometer-chopper unit consists of the chopper motor, chopper disk, bolometer bridge preamplifier, a reference oscillator, and a power supply (Figure 3.4). Frederick Flader Inc. developed these units.

The power supply is fed by a regulated 2 kva motor-generator set with a 400-cps 115-volt output. The frequency and stability are necessary in order to obtain a constant speed of 12,000 rpm from the chopper motor. This revolution rate in combination with 120 equally spaced holes on the chopper disk provides a chopping frequency of 24,000 cps.

A high step-up input transformer is used between the bolometer bridge and input of the preamplifier. The first stage of the preamplifier

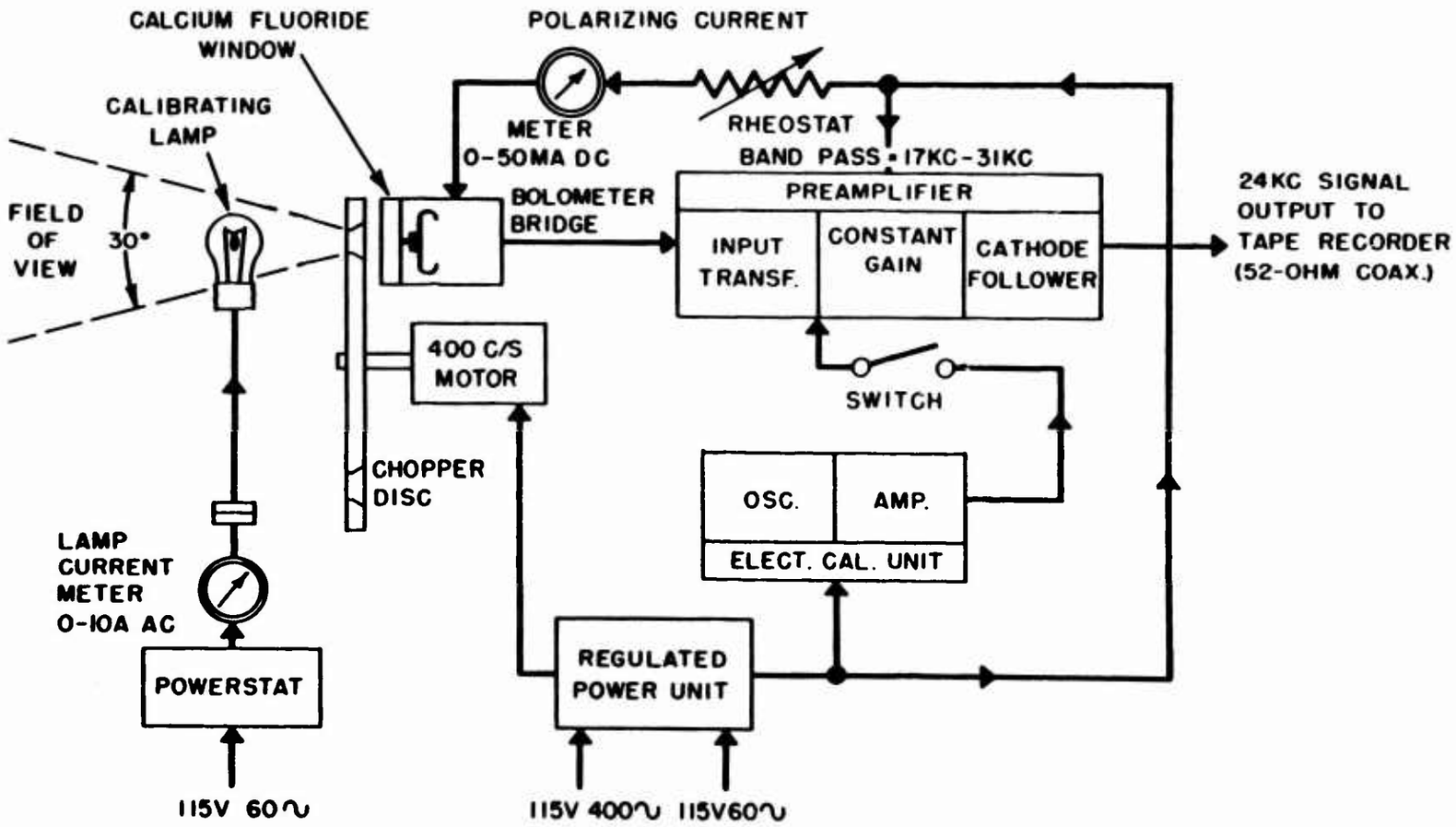

Figure 3.4 The bolometer chopper unit

consists of a low-noise 12AY7 amplifying stage. Bandwidth of the preamplifier is limited to 17 to 31 kc by a bandpass filter. The overall gain is approximately 300, and the output impedance is matched to a 52-ohm coaxial cable.

During pre-shot runs a 24-kc test signal is used for checkout of the system. It is provided internally by a multivibrator-amplifier reference oscillator. The operating condition of the bolometers themselves are checked by using the radiation from a 1000-watt projection lamp placed very near the entrance aperture. The geometry of the chopper system is such as to provide a 30-degree field of view for the instrument.

3.1.4 The Recorder Amplifier

The input stage of the recorder amplifier is coupled from the 52-ohm output cable of the preamplifier by a step-up transformer. The recorder amplifier has a 17 to 31 kc bandpass filter as did the chopper preamplifier. A dynamic range of 55 db is available for a 24-kc signal input. Zero decibels on the VU (volume unit) meter is referenced to a 60-mv rms input signal.

A 240-cps reference signal is also developed in this unit. This signal is generated by an American Time Products frequency standard model 2001-1L, having a specified accuracy of 0.001 percent. The reference signal is used as a check on recording speed accuracy. It is placed on the shot magnetic tapes as a check on the playback speed.

The bias signal is also contained in the recorder amplifier unit. It is an RC oscillator circuit with an output frequency of 100 kc. The bias signal has two purposes: one is to serve as an erase head in case there is any prior recording on the tape, the second is to place the magnetic tape material in a linear portion of the response curve.

A standard laboratory power supply is used to furnish the various power and voltage requirements of the recorder amplifier.

3.1.5 The Recorder Unit

The recorder units are of an unconventional type developed by Rangertone, Inc. The magnetic tape drive is accurately maintained at 60 in./sec by a synchronous drive motor. Each recorder contains three recorder heads for individual recording of the data signal, of the bias signal, and of the 240-cps reference signal.

In the recorder heads are 0.192 ampere-turns of data signal, 1.23 ampere-turns of bias signal, and 0.066 ampere-turns of the 240-cps reference signal. If intermodulation between the 24-kc data signal and the 240-cps reference signal takes place, the data record head must be demagnetized. A separate demagnitizer is provided for this purpose.

The bias, or erase head, for the unit is constructed in a manner quite similar to the data recorder head except there are less ampere-turns because the erase voltage has more amplitude than the signal voltage.

3.1.6 The Fiducial Marker

During the early nuclear test operations, some difficulty occurred in determining the exact zero time of a nuclear detonation on the magnetic tapes. Before Operation Castle, a fiducial time marker system was incorporated in order that zero time could be identified on the records.

The fiducial system works in the following manner: The output of a 30-kc oscillator is amplified by the fiducial marker amplifier whose cathode follower output is capacitor-coupled to the recorder amplifier, from whence it is automatically recorded by the tape recorder. A standard Edgerton, Germeshausen and Grier (EGG) photoelectric fiducial signal generator is used to obtain the marker trigger signal. The trigger pulse is fed by coaxial cable to the fiducial amplifier, where it is used to place a thyratron in its conducting state. When the thyratron goes

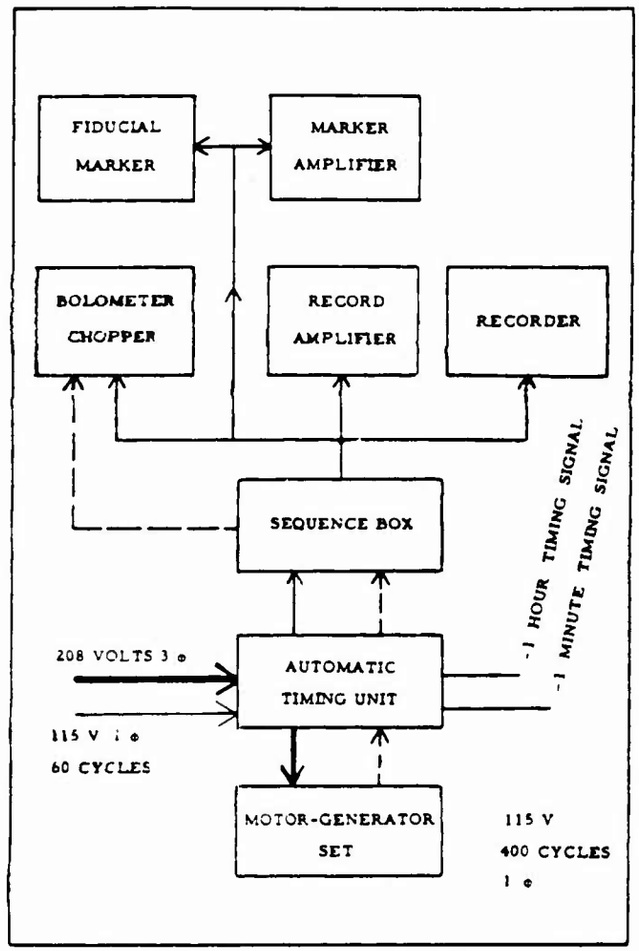

Figure 3.5 Block diagram showing the manner in which the automatic timing and sequence units control the power and timing signals

over to its conducting state, the cathode follower output stage of the fiducial amplifier is placed in an inoperable condition, thus shutting off the 30-kc signal output to the recorder amplifier. The 30-kc signal is turned on prior to zero time; hence zero time is indicated on the record by the cutoff of this signal.

3.1.7 The Automatic Timing Unit

The remote operation of the complete power-time equipment requires automatic control of a number of electrical power inputs and the sequencing of various calibrating and reference signals. Figure 3.5 illustrates

in block diagram form the manner in which these various functions are accomplished.

The sequence box shown in the figure is a part of the automatic timing unit and controls the two phases of recording. A complete cycle for the sequence box is three minutes. The EGG minus-one-minute timing signal is used to initiate the cycle. For the first 30 seconds the sequence box allows the 30-kc electronic oscillator to record on the data tape as a calibration check. A two-minute data-taking period then follows, at the end of which time the 30-kc signal is recorded for another 30 seconds. The sequence box also controls the start and stop times of the chopper motor and recorder. It has synchronous timer motors which get their power from the timing clocks in the automatic timing unit.

3.1.8 The Data Readout Equipment

The manner in which the data is obtained from the magnetic tape was illustrated schematically in Figure 3.2. The basic playback unit was manufactured by Rangertone, Inc., as was the recorder unit. The playback, or readout unit, plays the tape back at a speed of 15 in./sec which is one-fourth the recorder speed. Thus, the data signal frequency is transformed from 24 kc to 6 kc and the 240-cps reference signal to 60 cps. The reduction of data-taking frequencies by a factor of four is necessary for ease of photographic recording.

The signal from the readout unit is amplified and displayed on a Dumont Type 304-H oscilloscope. The oscilloscope display is photographed by a 35-mm Fairchild Type 314 strip camera. A built-in timing light records timing markers on the film to aid in data reduction.

3.1.9 The External Optical System

Each of the four bolometer systems had an independent line of sight viewing air zero. Their horizontal lines of sight from the chopper units were directed vertically by plane front-surface mirrors which subtended

almost the full 30-degree field of the chopper units. The mirrors were of evaporated aluminum which was coated with $1/4\lambda$ of silicon dioxide as protection against the corrosive salt atmosphere. Figure 3.6 shows a typical reflectance curve for mirrors of this type. Also shown in the figure is a typical platinum-evaporated-on-quartz scaling filter for neutral attenuation of the incident flux.

Atmospheric transmission is an important factor in power-time and total-thermal measurements. Customarily the mean atmospheric transmission is measured for each shot during an operation. Since a vertical air mass is involved in the case of Teak and Orange, a curve of a normal atmosphere (Reference 6) is also shown in Figure 3.6.

3.2 Total-Thermal Instrumentation

3.2.1 General Concept of the Total-Thermal System

The basic NRL total-thermal measuring system has remained unchanged since its first use on Operation Greenhouse. It is a quite simple system consisting only of a thermopile with a large time constant and a strip chart recorder (References 1 and 3).

The principle behind the system is straightforward. Nuclear explosions release the majority of their thermal energy in a comparatively short period of time. A thermopile with a decay time much longer than this thermal pulse thus responds ballistically; that is, the receiving elements heat up to a peak value proportional to the amount of thermal energy received. The voltage output of the thermoelectric junction or junctions can then be recorded on any standard amplifier-recorder unit. However, due to the uncertainties involved in recording a fast-rising signal on a chart recorder, namely, effects of recorder response time and overshoot, the peak voltage recorded necessarily has a large error in its value. Another function of the same thermopile output which does not suffer from the same uncertainties is the time integral under the

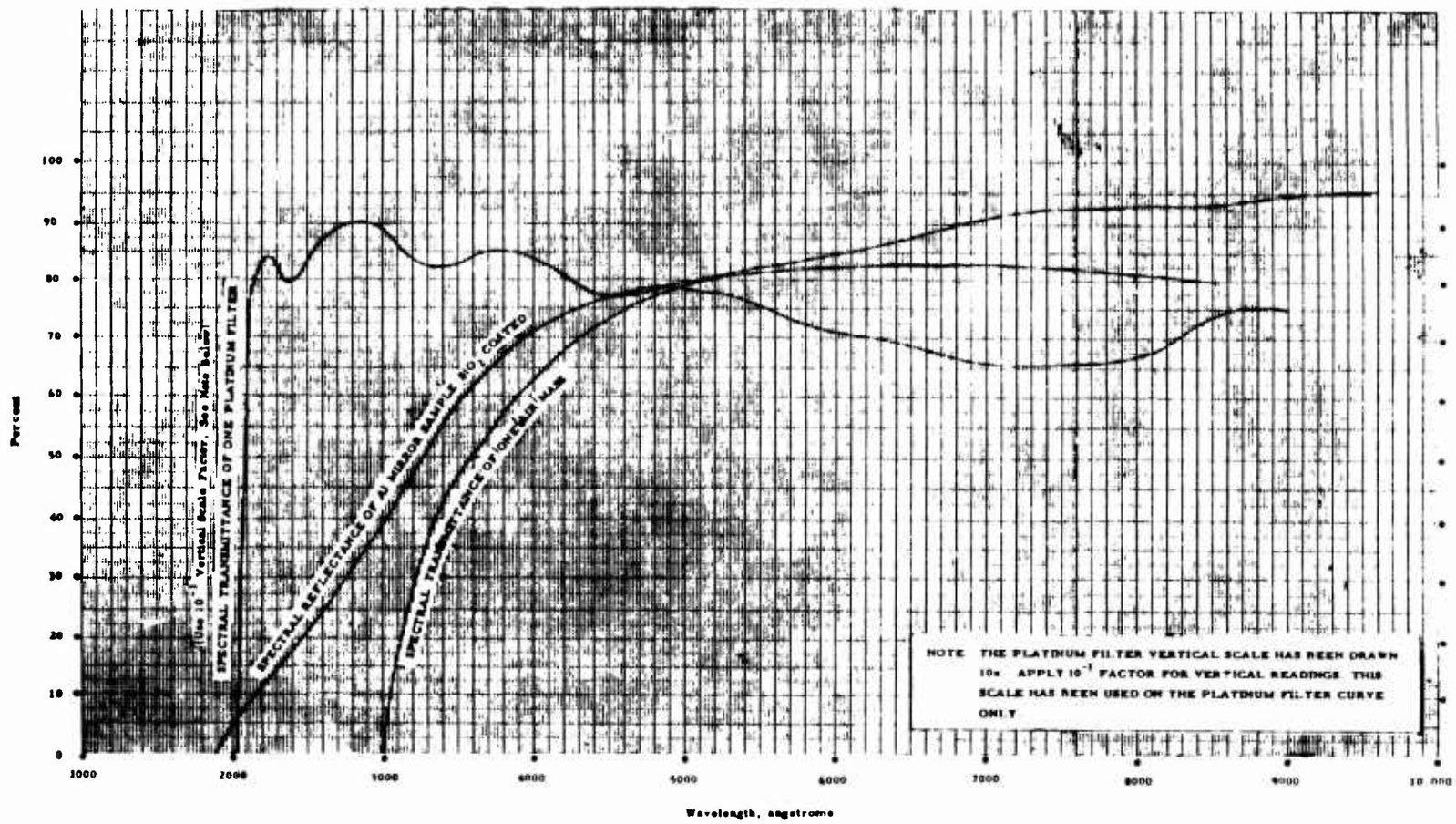

Figure 3.6 Wavelength behavior of various optical components and a normal atmosphere of 1 air mass

response curve of the thermopile. The energy that the thermopile absorbs must be radiated away or carried off by conduction or convection. These combined processes lead to the decay constant (α) of the thermopile. It can be shown that the combined area under the rise and decay curves on the strip charts is linearly related to the amount of energy received.

3.2.2 The Eppley Thermopile

The Eppley circular-type thermopile has characteristics quite suited to the needs of the total-thermal system and consequently was selected as the receiving unit. These thermopiles are rugged, relatively insensitive devices constructed by fastening four copper-constantan thermoelectric junctions to one side of a thin copper disk. The views shown in Figure 3.7 are of the rear of the copper disk. The front of the 5.4-mm-diameter disk is coated with lampblack to make the thermopile a blackbody receiver over a wide spectral range.

Each thermopile is enclosed in a sturdy housing as shown in Figure 3.8. The aperture-limiting disk, if used, defines the field of view of the thermopile, and the filter holder secures platinum attenuation filters in place if scaling is necessary. Without the aperture-limiting mask, the natural aperture of the thermopile is 6.9 mm. This aperture is sealed by either a calcium fluoride or lithium fluoride window, depending upon the type of thermopile used. Of the two variations of the same basic Eppley thermopile, that with the calcium fluoride window has a time constant of the order of 8 seconds, and that with the lithium fluoride window approximately a 2-second time constant. The internal resistance of all thermopiles is in the neighborhood of 4 ohms.

3.2.3 The Brown Recording Potentiometer

Earlier versions of the total-thermal equipment used General Electric recorder amplifiers. The Hardtack version used Minneapolis Honeywell-Brown recording potentiometers. In order to extend the range of the Brown recorders for both calibration and data taking, they

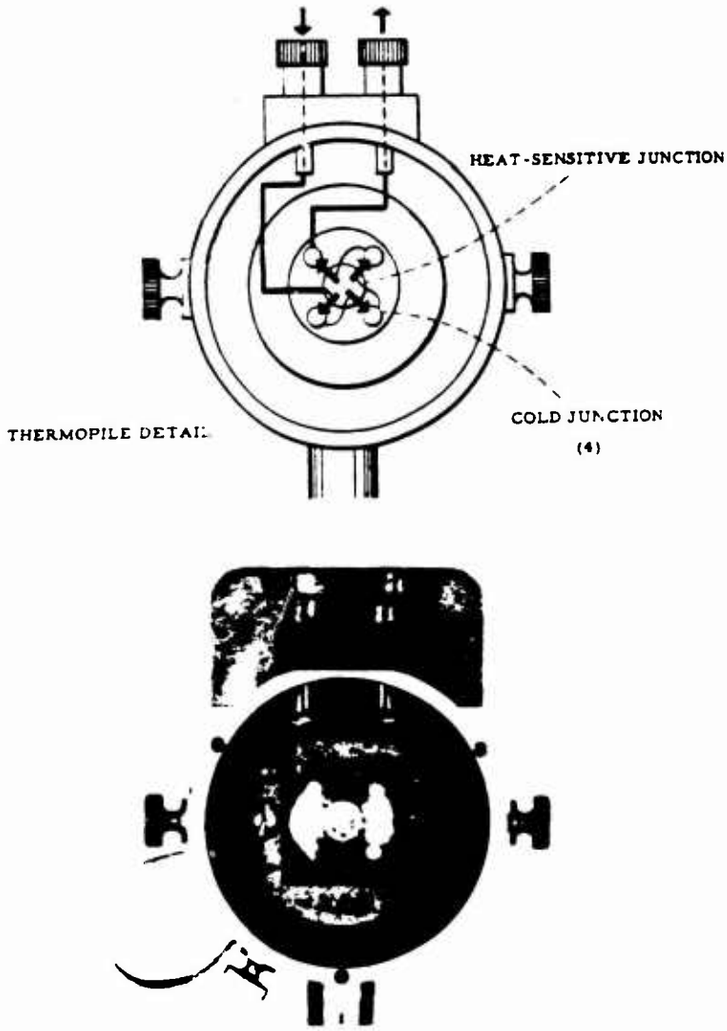

Figure 3.7 The Eppley circular thermopile: details of the thermojunctions

were modified to operate in either of two full-scale ranges: 0 to 1.0 millivolts or 0 to 10 millivolts. The range desired could be selected by the flip of a switch. Each thermopile was paired off with a recorder prior to being calibrated. The same calibrated thermopile and recorder remained as a pair for taking the shot data. A shielded cable connected the two parts of the system together.

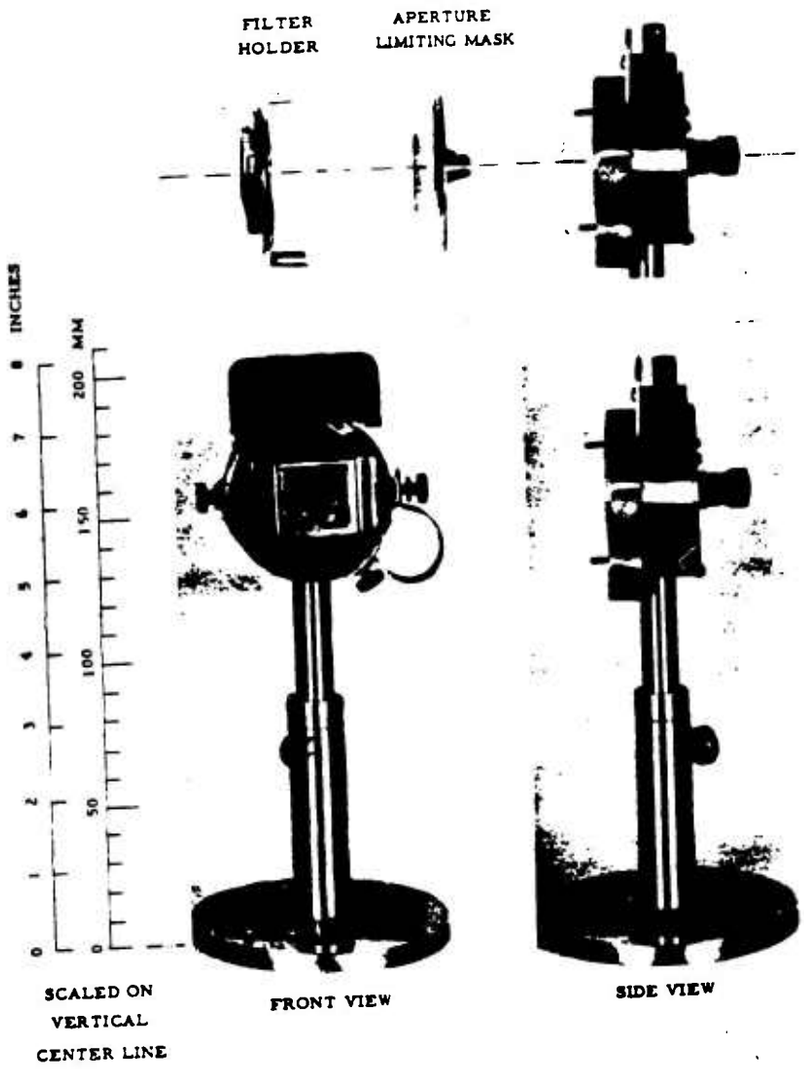

Figure 3.8 The Eppley circular thermopile: front view, side view, and exploded view

3.2.4 The External Optical System

The optical system for the total-thermal equipment was identical to that for the power-time equipment. A plane front-surface aluminum mirror turned the line of sight to air zero, and platinum-evaporated-on-quartz filters were used for scaling.

The reflectance of the SiO_2-coated mirror shown in Figure 3.6 is low due to the age of the mirror sample used for illustration. The

mirrors used on Hardtack had been freshly evaporated and coated. Their average reflectance for the wavelength range of interest was 85 percent.

Transmittance of the platinum scaling filters was obtained by measuring a thermopile response to a tungsten lamp with and without the filter in the beam.

4. CALIBRATIONS

4.1 Calibration of the Power-Time System

A direct calibration of the power-time system is difficult to achieve with any degree of accuracy. A 1000-watt lamp placed directly in front of the chopper unit gives signal-to-noise ratios only slightly above unity; hence the 1000-watt calibrating lamp shown in Figure 3.4 is used primarily as a check to see that the bolometer elements are functioning properly.

An indirect calibration of the power-time data is possible through use of the total-thermal data. The time integral of the thermal power output of the nuclear explosion is exactly the total thermal output. Thus, though only the relative thermal power is obtained from the power-time system, it is easily scaled to the correct absolute amplitude by equating the integral under the thermal-power curve to the value obtained for the total thermal yield.

4.2 Calibration of the Total-Thermal System

4.2.1 General Procedure

All absolute calibrations related to radiant energy are usually referenced for convenience to standard lamps. The choice of the type of standard (for example, color temperature or brightness temperature) depends on the particular application for which it is needed. The lamp most suited for calibration of the total-thermal system is of the type known as a total radiant flux standard. Lamps of this type are secured

from the National Bureau of Standards and become the primary standard for the experimenter.

In practice, many steps may be involved between obtaining a primary standard and achieving the end calibration of the data-taking system. For the case of the total-thermal system, these steps are listed below:

1. Transfer of calibration from the primary standard to a thermopile.
2. Transfer of calibration from the thermopile to secondary, or working, standard lamps.
3. Transfer of calibration from a secondary standard lamp to the working thermopiles.
4. Determination of the recorder characteristics.
5. Scaling of the working thermopiles.

4.2.2 Calibration of Secondary Standard Lamps

Steps 1 and 2 of the procedure outlined in the preceding section were followed through in great detail at NRL prior to shipment of the equipment to the field. Four secondary standard lamps were calibrated for cross-checking of all thermopiles and standards in the field. The NRL Radiometry I Branch primary standard, however, had not been checked against the NBS standards for a number of years; thus when a new Los Alamos Scientific Laboratory primary standard became available for use in the field it was decided to place the most reliance upon the thermopile calibrations determined with that standard. Calibrations arrived at with the NRL secondary standards were not very different from those obtained with the LASL standard, but since the most reliance can be placed on the latter, the values presented are based on the LASL lamp and the details of the calibration of secondary standards will be omitted.

4.2.3 The Total Radiant Flux Standard

The LASL total radiant flux standard lamp used for the total-thermal measurements had been assigned the number 4476 by the NBS. Its characteristics are as follows:

Operating current . . . . . 3.593 amps

Operating voltage . . . . . 87.10 volts

Color temperature . . . . . 2854°K

True temperature . . . . . 2775°K

Total incident flux . . . . . 4100 μ watts/cm^2 (at 1 meter).

The lamp current was simultaneously monitored with two Weston Model 904 ammeters. This type meter has an accuracy of 1/2 percent of full-scale deflection. Voltage control was obtained by use of a Variac and voltage stabilization by a Sola transformer.

4.2.4 The Brown Recorder Characteristics

Brown recording potentiometers were used to record the thermopile output. The characteristics of the recorder pertinent to the experiment are the following:

Chart speed . . . . . 7.5 sec/in.

Chart deflection (for 10 mv) . . . . . 11.0 in.

Ballistic sensitivity . . . . . 6.82 mv-sec/in.^{2}

The ballistic sensitivity, which is defined as the product of millivolts and seconds required to produce 1.0 square inch of area on the recorder chart paper, is determined by the chart speed and chart deflection.

4.2.5 Calibration of the Working Thermopiles

The working thermopiles and recorders were located inside an air-conditioned enclosure called a "doghouse." They viewed the burst location by means of ports which automatically opened 30 seconds before zero time. Turning mirrors located outside the ports elevated the lines of sight to air zero. Calibrations were performed "in situ" to eliminate any temperature or background dependent effects.

The calibration consisted of placing the standard lamp exactly 25 cm from each thermopile and exposing the thermopile to the lamp for approximately 10 seconds. A thermal shutter was used to produce the exposures.

It consisted of alternate layers of aluminum foil and Celotex. Actually, the thermopiles were insensitive enough so that neither the type of shutter used nor the type of background viewed made a discernible difference in calibration values.

The exact shuttering time was not explicitly measured since it was implicit on the chart record and could accurately be scaled from the chart. Two 10-second calibration runs were made on each thermopile. The final values are the means of the two runs.

At 25 cm the irradiance produced by the standard lamp is

Calibrating Irradiance = 0.0656 joules/cm^2-sec (at 25 cm).

With all recorders set for a full-scale deflection equivalent to 10 mv, the thermopile calibration factors determined were those shown in Table 4.1. The calibration factor of the thermopiles is defined to be the energy per square centimeter incident on the thermopile which is necessary to produce a square inch of area on the recorder chart paper.

TABLE 4.1 CALIBRATION FACTORS OF THE WORKING THERMOPILES

Thermopile No.	Mean Chart Area per Second	Irradiance	Calibration Factor
	in.^{2}/sec	joules/cm^2-sec	joules/cm^2-in.^{2}
2609	0.196	0.0656	0.335
2610	0.213	0.0656	0.308
1814	0.166	0.0656	0.395
2249	0.182	0.0656	0.360

Figure 4.1 illustrates a typical 10-second calibration recording. The total area under the curve is directly related to the irradiance producing the deflection and to the duration of the exposure. If the thermopile had zero response time, the profile of the area would have been a rectangle. However, due to the finite response time, there exists an

exponential rise and decay to the calibration exposure. That the area under the curve is independent of the decay constant α of the thermopile and thus is exactly equal to the area under the hypothetical rectangle can easily be shown mathematically. The change in temperature θ' produced

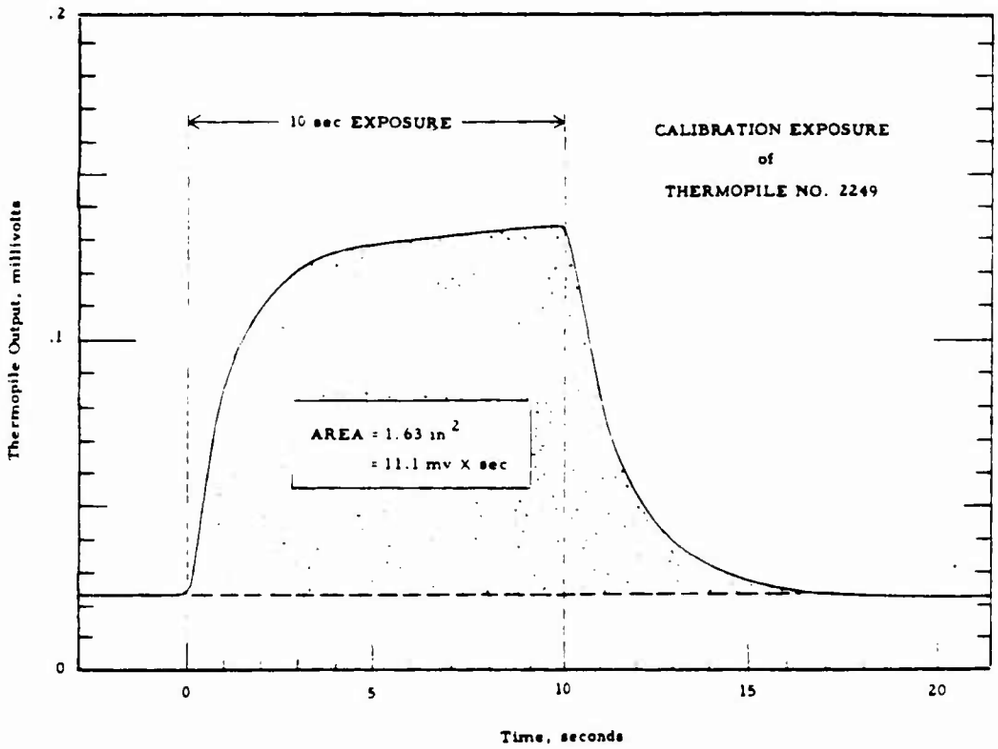

Figure 4.1 Typical total-thermal calibration trace for a 10-second exposure

in the thermopile element during the time of irradiation is given by Equation (3.1), repeated below, and during the decay time by Equation (4.1), introduced below, where all symbols and units are as defined in Section 3.1.2:

$$\theta' = \frac{aAH}{h}(1 - e^{-\alpha t}), \qquad 0 \leqq t \leqq t_o \tag{3.1}$$

$$\theta'' = \frac{aAH}{h}(1 - e^{-\alpha t_o})\, e^{-\alpha t}, \qquad t_o \leqq t \leqq \infty. \tag{4.1}$$

The thermoelectric emf, V, in volts is assumed to vary linearly with temperature over the temperature range used; therefore

$$V = k\theta' + k\theta'', \quad 0 \leq t \leq \infty. \tag{4.2}$$

The area, S, in volt-seconds under the response curve is thus the time integral of the voltage; i.e.,

$$S = \int_0^{\infty} V\,dt$$

$$S = \frac{kaAH}{h} \int_0^{t_o} (1 - e^{-\alpha t})\,dt + \frac{kaAH}{h}(1 - e^{-\alpha t_o}) \int_{t_o}^{\infty} e^{-\alpha t}\,dt \tag{4.3}$$

or, upon performing the integration,

$$S = \frac{kaAHt_o}{h} \tag{4.4}$$

$$S = \frac{Ht_o}{K}, \text{ where } K = \frac{h}{kaA}\ \frac{\text{joules}}{\text{cm}^2\text{-volt-sec}}. \tag{4.5}$$

The equivalence between $K = Ht_o/S$ and the calibration factor is thus demonstrated. For convenience, the area under the integral is measured in square inches of chart paper, but the same area can be converted to volt-seconds by use of the recorder characteristics given in Section 4.2.4.

4.2.6 Scaling of the Working Thermopiles

Because of the uncertainty in the expected total thermal yield of the high-altitude detonations, it was necessary to plan an extended range of coverage by the thermopiles. The pre-shot assignments for range of coverage are given in Table 4.2. Once the assignments were made, it was only necessary to determine the expected thermal energy pulse to be received at the thermopiles and then by the use of neutral attenuation filters to scale the thermopiles to their range assignment. In each case the upper level of the range assignment was placed as near as possible to full scale (10 mv) on the Brown recording potentiometers.

TABLE 4.2 THERMOPILE RANGE OF COVERAGE ASSIGNMENTS

Event	Thermopile	Range of Coverage
Teak and Orange	2610	0 to 2 x Expected Energy
Teak and Orange	2249	0 to 1/5 x Expected Energy
Teak and Orange	2609	0 to 1 x Expected Energy
Teak and Orange	1814	0 to 1/10 x Expected Energy

The expected thermal energy was calculated assuming isotropic point-source emission. Taking 1 kiloton = 10^{12} calories, the total energy output equivalences for a explosion are

At a distance d cm from the explosion, assuming the full yield is converted to thermal radiation, the unattenuated energy incident per unit area is given by

(4.6)

Using the distances from the recording station to the predicted burst locations, the expected unattenuated incident energy was calculated. These values are given in the next-to-last column of Table 4.3. Atmospheric transmission measurements were performed, but only after the range assignments had been made. For purposes of fixing the expected thermal energy (last column), a value of 50 percent was taken for the atmospheric transmission. It was realized that this value was certainly on the low side; however, by taking the full yield of the weapon as being converted to thermal energy there was a tendency to balance the approximation.

To set the full-scale sensitivity of the recorders to their range assignments, it was necessary to determine the value of an energy impulse incident on each thermopile required to produce a full-scale deflection.

When an energy impulse is absorbed by the receiving element of a thermopile, it is heated, during the time duration of the impulse, to a peak temperature value. If V_o is the corresponding peak voltage, the instantaneous voltage thereafter is given by

$$V = V_o e^{-\alpha t} \text{ volts} \tag{4.7}$$

where α represents the decay constant as the energy is reradiated, conducted, or dissipated by convection. The energy which is necessary to make V_o a full-scale deflection is simply the area under the decay curve or

$$S = \int_0^\infty V\,dt = V_o/\alpha \text{ volt-sec.} \tag{4.8}$$

Decay constants for each thermopile were measured from curves similar to that shown in Figure 4.1. The volt-seconds (area under the decay curve) required to produce a full-scale deflection are given in Table 4.4. From the values of V_o/α, the recorder ballistic sensitivity, and the thermopile calibration factors the energy equivalent to full-scale deflection was obtained. These are shown in Table 4.5.

The final step in this scaling process was to determine the amount of optical attenuation needed to set each thermopile in its proper range of coverage. Table 4.6 summarizes the values calculated so far to determine the amount of attenuation and gives the transmittance of the filter needed.

Page 39 deleted.

Platinum-evaporated-on-quartz optical filters were fabricated at NRL to be used as the attenuating devices. These filters are fairly neutral in transmitting properties over a large spectral range extending from the near ultraviolet region into the infrared (Figure 3.6). Considerable difficulty is experienced in obtaining exact transmittance values. For one reason, only approximate measurements can be made while the evaporation is in process; for another, the transmittance changes upon exposure to air and takes a few days to stabilize around its eventual value. Because of these factors and because the expected thermal energy was at best only a fair approximation, no prolonged attempt was made to obtain the exact transmittances specified in Table 4.6. A sufficient number of filters were made, with varying transmittances, such that an adequate approximation to the calculated value could be chosen in each case. The actual transmittances of the filters used are shown in Table 4.7.

5. RESULTS

5.1 Power-Time Measurements

Of the four power-time systems operated on Teak and Orange shots not all received signals of sufficient amplitude to produce good data because of the scaling filters which were used. This, of course, was not unexpected but was a consequence of scaling for a wide range of

coverage. On Teak shot the systems designated as G-B and H-B recorded data of excellent signal-to-noise ratio. Reproductions of the shot records are shown in Figure 5.1.

The modulated envelope of the H-B record is indicative of microphonics in the electronic system. Though microphonics plagued this system on both shots, they were never present during dry runs or calibrations. Thus, the only significant Teak power-time data was taken with the G-B system.

A power-time record for a
is shown for comparison with the high-altitude Teak event. Though the time scale of each record is the same, no comparisons should be drawn between the relative amplitudes of each because of the different electronic and optical attenuations used in each case. The record for shot is typical of surface detonations. One sees the "first maximum" of brightness decaying to the "minimum" and then the "second maximum"
Teak shot as predicted, however, showed none of these same features. Its thermal power output rose to a maximum and decayed monotonically to zero, releasing the bulk of its energy within 100 to 200 ms. One discrepancy from the predicted behavior is the lack of signal for the first 10 ms. Not only does this not agree with prediction but also disagrees with photoelectric records taken by others (Reference 7).

The Orange shot records are shown in Figure 5.2. Again, the microphonics are apparent in the H-B record. The amplitude of the G-T system is weak, while that of the G-B system is excellent. Although Orange was predicted to have a slight "minimum" effect because of the lower burst altitude, the minimum present in the G-B record is almost washed out, and again there is an unexpected lack of signal for the first 10 ms or so.

Pages 42 and 43
deleted.

The disagreement between the records of all NRL systems at early times, on the one hand, and prediction and photoelectric records on the other, made the NRL power-time systems suspect. Consequently, a lengthy study of the systems was carried out at NRL in order to determine the source of the trouble. The difficulty was finally traced to the behavior of the fiducial marking system. When the photoelectric trigger signal causes the thyratron transmitting the 30-kc marker signal to go over to the conducting state, a signal is apparently created which blocks the recorder amplifier momentarily; some period of time then elapses during which the amplifier recovers. Numerous experiments were conducted in order to determine this attenuation as a function of time in order that the shot data could be corrected. The method finally selected for giving the correct function consisted of feeding a steady 24-kc oscillator signal from the bolometer chopper unit through the system, simultaneously mixing it with the 30-kc signal from the fiducial marker. The fiducial system was then triggered by a light pulse from a General Radio Strobolume. Results of this determination were the same for every system. Typical examples are shown in Figure 5.3.

In order to correct the shot data it was assumed that the amount of attenuation present in a given system at a particular time was given by the ratio of the amplitude of the correction trace (Figure 5.3) at that time to the amplitude at the time that a steady-state signal had been reached. The corrected data for Teak and Orange shots are shown in Figures 5.4 through 5.6. Curves extraced from the original records are presented along with the corrected data. Since there is an absence of original data for the first 10 ms, the correction process cannot be continued back into that early time region.

No attempt has been made to place the thermal power on an absolute basis. Without the full relative curve any determination of the area under the curve (which is the total thermal energy) might be quite

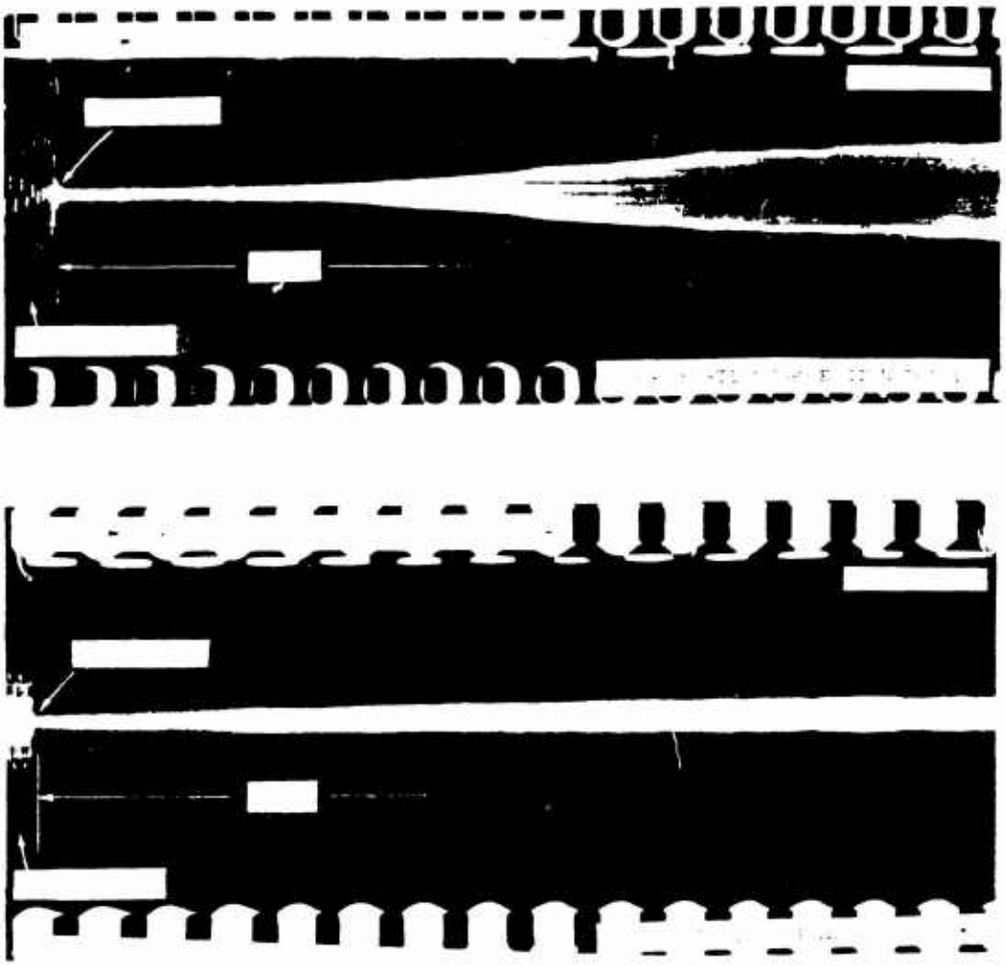

Figure 5.3 Spurious electronic attenuation as a function of time

inaccurate depending upon the shape of the unknown position. For Orange shot the G-B system data should be more accurate than that of the G-T system, since the signal-to-noise ratio of the shot data is much greater in the former system.

5.2 Total-Thermal Measurements

5.2.1 Transmission of the Atmosphere

The total-thermal equipment, along with the power-time equipment, was located at Station J-1811 on Johnston Island. Its coordinates with respect to the launch point were determined by a Holmes and Narver survey team. Distances to the burst location were calculated from the J-1811 position and the coordinates of the bursts furnished by the Army Ballistic Missiles Agency.

Pages 46 through 48 deleted.

To calculate the total-thermal yield of the detonations from the amount of energy received by the calibrated thermopiles it was necessary to know the transmission of the atmosphere in addition to the distances involved and values of the scaling filters. The altitudes of the detonations were such that a whole vertical air mass was necessarily considered. Teak was detonated almost vertically over Station J-1811 while Orange was at an elevation angle of approximately 45 degrees from the station.

It was expected that the firings would occur only during excellent observation conditions. Consequently, the method selected for measuring the transmission of the atmosphere involved measuring the solar constant on clear days when the sun was very near the zenith at Johnston Island. The values of transmission obtained in this manner for one air mass were sufficient to fix the transmission to within the order of accuracy of the error for the entire experiment. The measurements were performed using the calibrated Eppley thermopiles.

The solar constant, σ, is defined as the total radiation received outside the earth's atmosphere per unit area at a mean sun-earth distance:

$$\sigma = 1.97 \pm 0.01 \text{ cal/cm}^2\text{-min}$$
$$= 0.137 \text{ joules/cm}^2\text{-sec.}$$

The above value for the solar constant is the mean value for a year. In late July the earth is 1.015 astronomical units from the sun. This leads to a 3-percent correction to the solar constant because of the inverse-square-law dependence of flux on distance. When corrected by this factor, the solar constant for late July becomes 0.133 joules/cm^2-sec, which value was used for the atmospheric transmission measurements.

For an exposure time t, in seconds, the transmission of the atmosphere as measured by the thermopiles is given by

$$T_A = \frac{(C.F.)S}{\sigma t R} = \frac{8.85(C.F.)S}{t} \qquad (5.1)$$

where

S = the area under the thermopile record (in.^{2})

R = the reflectance of the mirror in the system (85%)

C.F. = the calibration factor of the thermopile (joules/cm^2-in.^{2}).

Data taken on three typically clear days prior to Teak shot are presented in Table 5.1.

TABLE 5.1 MEAN TRANSMISSION OF 1 AIR MASS AT JOHNSTON ISLAND

Date	Thermopile No.	t	S	C.F.	T_A
		sec	in.^{2}	joules/cm^2-in.^{2}	
July 24	1814	6.0	1.38	0.395	80.4%
		10.3	2.30	0.395	78.2
July 27	1814	4.9	1.12	0.395	80.1
		9.6	2.24	0.395	81.7
July 28	1814	5.3	1.22	0.395	80.6
		9.6	2.07	0.395	75.5
July 28	2610	5.2	1.35	0.308	70.9
		9.9	2.32	0.308	64.0
				Mean transmission =	76.4%

5.2.2 Teak Total-Thermal Measurements

The burst location of Teak shot was off by some 11.2 km in the horizontal plane at burst altitude. The actual burst location was very close to the zenith at Station J-1811; hence no correction for zenith angle was made to the mean transmission obtained for one air mass. No clouds were in the line of sight at shot time, so that the above mean transmission value can be used with some assurance. A haze layer was present as evidenced by data taken with high-speed streak cameras (Reference 8). This haze layer is not uncommon, even in the Pacific Atolls, as shown by evidence gathered at previous operations (Reference 9). In fact it seems to be the rule rather than the exception, but, of course, it varies in concentration and therefore in transmission.

Since no provision was made to evaluate the transmission at shot time, the assumption has to be made that transmission was very much like the mean value obtained.

As measured by the thermopiles the total thermal yield of the nuclear detonation is given by

$$Y = \frac{4\pi d^2 (C.F.) S}{T_F T_A R} \text{ joules} \tag{5.2}$$

where T_F is the transmittance of the scaling filter and all other symbols are as defined before. Values of the quantities specific to all systems are

$$d = 76.3 \times 10^5 \text{ cm}$$
$$T_A = 76.4\%$$
$$R = 85\%.$$

After substitution of these values into Equation (5.2) the expression for the total thermal yield becomes

$$Y = 1.126 \times 10^{15} \frac{(C.F.) S}{T_F} \text{ joules.} \tag{5.3}$$

Figure 5.7 shows reproductions of the shot records for two of the four Eppley thermopiles. The amplitudes of the signals on the remaining two thermopiles, because of scaling, were off scale on the recorders and therefore of no value. The values of total thermal yield computed from the usable records are given in Table 5.2.

When the mean value is converted to the equivalent energy value in megaton units, it becomes

Teak Total Thermal Yield =

The field of view of the thermopiles was a circle 14.6 km in radius centered on predicted air zero. Since the actual burst location was 11.2 km off, the question must be raised as to whether the thermal yield value quoted should not have a field-of-view correction. Inspection of photographic data indicates that the bulk of the energy was released within the modified field of view and that the correction factor is insignificant.

5.2.3 Thermal Energy Received at Johnston Island - Teak Shot

A physical quantity not as important as the total thermal yield, yet of significant value, is the amount of thermal energy received on the ground beneath the high-altitude detonations. This information is easily extracted from the thermopile records in the case of Teak shot. The thermal energy received at Station J-1811 is given by

$$E = \frac{(C.F.)S}{T_F R} \text{ joules/cm}^2. \tag{5.4}$$

From the preceding values for each of these quantities the thermal energy received is calculated to be:

Thermal Energy Received at Johnson Island - Teak Shot

5.2.4 Orange Total-Thermal Measurements

Because of dense cloud cover over Johnston Island on Orange shot, optical measurements suffered severely. No data can be given for the total thermal yield of Orange since the transmittance of the cloud layer is unknown to within a very large factor. However, the thermal energy received at Johnston Island is readily obtained from the shot data and is presented for what it may be worth:

Thermal Energy Received at Johnston Island - Orange Shot

Page 53 deleted.

REFERENCES

1. Radiometry Branch, NRL; "Operation Greenhouse Annex 1.3, Thermal Radiation Measurements, Part II Total Thermal Radiation"; NRL Report 5352, RD 00912; Apr. 1959; Secret-Restricted Data.

2. Radiometry Branch, NRL; "Operation Greenhouse Annex 1.3, Thermal Radiation Measurements, Part I Atmospheric Transmission"; NRL Report 5250, RD 00886; Aug. 1958; Secret-Restricted Data.

3. E. M. Man, Jr.; "Operation Tumbler-Snapper, Total Thermal Radiation and Atmospheric Transmission," NRL Report 5434; in publication; Secret-Restricted Data.

4. J.E. Perry; "A Compendium of the Measurements of Relative Power as a Function of Time"; NRL Report 4875, RD 00703; Apr. 1957; Secret-Restricted Data.

5. A. Broido and A.B. Willoughby; "Measurement of Intense Beams of Thermal Radiation," J. Opt. Soc. Amer. 1958, Vol. 48, page 344.

6. C.W. Allen; "Astrophysical Quantities"; 1955; The Athlone Press, University of London; page 116.

7. A.T. Stair, Jr., and D.J. Baker; "Thermal Radiation from a Very High Altitude Burst"; AFSWP Preliminary Report ITR-1648-2; Oct. 1958; Secret.

8. D.F. Hansen and others; "Operation Hardtack-Newsreel, Interim Test Report on Teak," NRL Report 5294, RD 00901; Feb. 1959; Secret-Restricted Data.

9. D.L. Whitt; "Operation Castle, Atmospheric Transmission Measurements"; NRL Report 5435; in publication; Confidential.

* * *

Pages 55 and 56 deleted.