(2)

POR-2272(EX)
(WT-2272)(EX)
EXTRACTED VERSION

OPERATION SUN BEAM, SHOTS LITTLE FELLER II AND SMALL BOY

Project Officer's Report—Project 7.16

Airborne E-Field Radiation Measurements of Electromagnetic Pulse Phenomena

DTIC
ELECTE
MAR 0 3 1986
S D
D

K. L. Butler, Project Officer
U. S. Naval Missile Center
Point Mugu, CA

11 September 1964

AD-A995 380

NOTICE:

This is an extract of POR-2272 (WT-2272), Operation SUN BEAM, Shots Little Feller and Small Boy, Project 7.16.

Approved for public release;
distribution is unlimited.

DTIC FILE COPY

Extracted version prepared for
Director
DEFENSE NUCLEAR AGENCY
Washington, DC 20305-1000

1 September 1985

86 3 3 011

Destroy this report when it is no longer needed. Do not return to sender.

PLEASE NOTIFY THE DEFENSE NUCLEAR AGENCY, ATTN: STTI, WASHINGTON, DC 20305-1000, IF YOUR ADDRESS IS INCORRECT, IF YOU WISH IT DELETED FROM THE DISTRIBUTION LIST, OR IF THE ADDRESSEE IS NO LONGER EMPLOYED BY YOUR ORGANIZATION.

UNCLASSIFIED
SECURITY CLASSIFICATION OF THIS PAGE

AD-A995380

REPORT DOCUMENTATION PAGE

1a REPORT SECURITY CLASSIFICATION UNCLASSIFIED	1b RESTRICTIVE MARKINGS
2a SECURITY CLASSIFICATION AUTHORITY N/A since Unclassified 2b DECLASSIFICATION/DOWNGRADING SCHEDULE N/A since Unclassified	3 DISTRIBUTION/AVAILABILITY OF REPORT Approved for public release; distribution is unlimited.
4 PERFORMING ORGANIZATION REPORT NUMBER(S)	5 MONITORING ORGANIZATION REPORT NUMBER(S) POR-2272(EX) (WT-2272)(EX)
6a NAME OF PERFORMING ORGANIZATION U.S. Naval Missile Center 6b OFFICE SYMBOL (If applicable)	7a NAME OF MONITORING ORGANIZATION Defense Atomic Support Agency
6c ADDRESS (City, State, and ZIP Code) Point Mugu, CA	7b ADDRESS (City, State, and ZIP Code) Washington, DC
8a NAME OF FUNDING/SPONSORING ORGANIZATION 8b OFFICE SYMBOL (If applicable)	9 PROCUREMENT INSTRUMENT IDENTIFICATION NUMBER
8c ADDRESS (City, State, and ZIP Code)	10 SOURCE OF FUNDING NUMBERS PROGRAM ELEMENT NO / PROJECT NO / TASK NO / WORK UNIT ACCESSION NO

11 TITLE (Include Security Classification) OPERATION SUN BEAM, SHOTS LITTLE FELLER II AND SMALL BOY, Project Officer's Report—Project 7.16, Airborne E-Field Radiation Measurements of Electromagnetic Pulse Phenomena, Extracted Version

12 PERSONAL AUTHOR(S)
Butler, K. L.

13a TYPE OF REPORT	13b TIME COVERED FROM ____ TO ____	14 DATE OF REPORT (Year, Month, Day)	15 PAGE COUNT
		640911	34

16 SUPPLEMENTARY NOTATION This report has had sensitive military information removed in order to provide an unclassified version for unlimited distribution. The work was performed by the Defense Nuclear Agency in support of the DoD Nuclear Test Personnel Review Program.

17 COSATI CODES

FIELD	GROUP	SUB-GROUP
18	3	
20	14	

18 SUBJECT TERMS (Continue on reverse if necessary and identify by block number)
Sun Beam, Little Feller II, Small Boy, Radiation Measurements, Electromagnetic Pulse, Instrumentation

19 ABSTRACT (Continue on reverse if necessary and identify by block number)

Airborne measurements of the absolute vertical electric field (E-field) of the radiated electromagnetic pulse were attempted for Shots Little Feller II and Small Boy. Instrumentation included calibrated vertical whip antennas, wideband magnetic tape recorders, and photographs of oscilloscope traces. One instrumented aircraft participated in Little Feller II (C-131F); two aircraft participated in Small Boy (a C-131F and an A-3A). No detectable signals were recorded for either event.

It is concluded that the vertical E-field intensities encountered were below the calibrated levels of the instrumentation or the method of instrumentation and calibration was inadequate for nonrepetitive pulse signals.

20 DISTRIBUTION/AVAILABILITY OF ABSTRACT ☒ UNCLASSIFIED/UNLIMITED ☐ SAME AS RPT ☐ DTIC USERS	21 ABSTRACT SECURITY CLASSIFICATION UNCLASSIFIED
22a NAME OF RESPONSIBLE INDIVIDUAL MARK D. FLOHR	22b TELEPHONE (Include Area Code) (202)325-7559 / 22c OFFICE SYMBOL DNA/ISCM

DD FORM 1473, 84 MAR — 83 APR edition may be used until exhausted. All other editions are obsolete.

SECURITY CLASSIFICATION OF THIS PAGE
UNCLASSIFIED

FOREWORD

Classified material has been removed in order to make the information available on an unclassified, open publication basis, to any interested parties. The effort to declassify this report has been accomplished specifically to support the Department of Defense Nuclear Test Personnel Review (NTPR) Program. The objective is to facilitate studies of the low levels of radiation received by some individuals during the atmospheric nuclear test program by making as much information as possible available to all interested parties.

The material which has been deleted is either currently classified as Restricted Data or Formerly Restricted Data under the provisions of the Atomic Energy Act of 1954 (as amended), or is National Security Information, or has been determined to be critical military information which could reveal system or equipment vulnerabilities and is, therefore, not appropriate for open publication.

The Defense Nuclear Agency (DNA) believes that though all classified material has been deleted, the report accurately portrays the contents of the original. DNA also believes that the deleted material is of little or no significance to studies into the amounts, or types, of radiation received by any individuals during the atmospheric nuclear test program.

OPERATION SUN BEAM

SHOTS LITTLE FELLER II AND SMALL BOY

PROJECT OFFICERS REPORT — PROJECT 7.16

AIRBORNE E-FIELD RADIATION MEASUREMENTS OF ELECTROMAGNETIC PULSE PHENOMENA

K.L. Butler, LCDR, USN
Project Officer

U.S. Naval Missile Center
Point Mugu, California

This document is the author(s) report to the Director, Defense Atomic Support Agency, of the results of experimentation sponsored by that agency during nuclear weapons effects testing. The results and findings in this report are those of the author(s) and not necessarily those of the DOD. Accordingly, reference to this material must credit the author(s). This report is the property of the Department of Defense and, as such, may be reclassified or withdrawn from circulation as appropriate by the Defense Atomic Support Agency.

DEPARTMENT OF DEFENSE
WASHINGTON, D.C. 20301

ABSTRACT

Airborne measurements of the absolute vertical electric field (E-field) of the radiated electromagnetic pulse were attempted for Shots Little Feller II and Small Boy. Instrumentation included calibrated vertical whip antennas, wide-band magnetic tape recorders, and photographs of oscilloscope traces. One instrumented aircraft participated in Little Feller II (C-131F); two aircraft participated in Small Boy (a C-131F and an A-3A). No detectable signals were recorded for either event.

It is concluded that the vertical E-field intensities encountered were below the calibrated levels of the instrumentation or the method of instrumentation and calibration was inadequate for nonrepetitive pulse signals.

Accesion For
NTIS CRA&I ☑
DTIC TAB ☐
Unannounced ☐
Justification
By
Distribution /
Availability Codes
Dist | Avail and / or Special
A-1

UNANNOUNCED

CONTENTS

ABSTRACT ---------- 5

INTRODUCTION ---------- 9

THEORY, OBJECTIVES, AND BACKGROUND ---------- 10

PROCEDURE ---------- 11

Instrumentation ---------- 11
Calibration ---------- 15
Flight Paths: Little Feller II ---------- 18
Small Boy ---------- 19

RESULTS ---------- 21

CONCLUSIONS ---------- 23

GENERAL COMMENTS ---------- 24

TABLES

1 Specifications of Aircraft Instrumentation ---------- 26

FIGURES

1 C-131F antenna sensitivity chart ---------- 28
2 C-131F antenna locations ---------- 29
3 A-3A antenna location ---------- 30
4 Photograph of C-131F starboard pylon antenna ---------- 31
5 Line drawing of airborne instrumentation ---------- 32
6 Atmospheric refractive index for 7 July 1962, Shot Little Feller II ---------- 33
7 Atmospheric refractive index for 14 July 1962, Shot Small Boy ---------- 34

AIRBORNE E-FIELD RADIATION MEASUREMENTS OF ELECTROMAGNETIC PULSE PHENOMENA

INTRODUCTION

The U. S. Naval Missile Center (NMC) was approached by representatives of the Continental Test Organization (CTO), Field Command, Defense Atomic Support Agency (FC/DASA), during late May 1962 with a proposal that NMC make certain radio frequency (RF) field intensity measurements during Shot Small Boy, Operation Sun Beam. The Commander, NMC, made a study of the project requirements and the NMC capabilities and decided that NMC could properly prosecute the project utilizing presently available equipment. The Naval Missile Center is a field activity of the Bureau of Naval Weapons, Department of the Navy. Informal permission from the Bureau of Naval Weapons was obtained before any further preparations were attempted. The Chief, DASA, formally requested the participation of NMC in a Secret message to the Chief of Naval Operations (CNO). CNO directed that the Bureau of Naval Weapons provide the support of NMC to participate in Shot Small Boy as requested by the Chief, DASA, provided there would be no interference to normally assigned Bureau of Naval Weapons missile project tasks.

The Electronic Warfare Division of NMC was directed to perform the support operations requested by DASA. The Electronic Warfare Division has a broad background in all forms of electronic warfare, frequency interference, and missile and radar system countermeasures and has available the personnel, equipment, and aircraft to make airborne RF measurements such as those requested by the Chief, DASA.

THEORY, OBJECTIVES, AND BACKGROUND

The basic objective of Small Boy was to obtain, experimentally, a verification of the electromagnetic pulse phenomena of a low yield, surface burst, nuclear detonation. The objective of Project 7.16 was to measure experimentally the absolute radiated energy of the vertical E-field at two airborne positions in close proximity to a surface detonation. These measurements were an attempt to verify the theoretical predictions, scaling laws, and techniques described in the Small Boy Pre-Test Analysis **(document is out of print; later information is contained in Small Boy POR's).**

As described in the Small Boy Pre-Test Analysis, prepared by personnel of the Research Directorate of the Air Force Special Weapons Center, experimental data of previous weapon tests, both by the United States and the United Kingdom, have explored the presence of the electromagnetic pulse. The measurements to be obtained experimentally by Project 7.16 aircraft as well as the other projects concerned with surface field measurements were expected to correlate the previous test data.

The vertical E-field of the electromagnetic pulse was the prime area of interest to Project 7.16. This was dictated by the short preparation

time and the requirement that only presently available equipment be utilized. Magnetic fields were not investigated because of the inherent complexity of the instrumentation required for magnetic field measurements. Contributing to this complexity were complications in mounting and calibrating loop antennas on aircraft. Relatively simple vertical stub antennas can be used for vertical E-field measurements.

PROCEDURE

Instrumentation

When the Electronic Warfare Division of NMC was first approached by FC/DASA personnel to make the airborne RF field intensity measurements, it was suggested by these personnel that the aircraft carry field intensity measuring equipment such as the AN/PRM-1A, the AN/URM-6B, and similar equipment for the appropriate frequencies, to make measurements in the frequency spectrum from 5 to 20 kilocycles and from 100 to 200 megacycles. The field intensities of the vertical E-field expected at the contemplated distances from ground zero (GZ) were to be approximately as reported verbally by FC/DASA personnel.

There are three distinct disadvantages of using calibrated field intensity equipment for such measurements. They are:

1. Calibrated field intensity meters are basically sensitive, narrow band, accurate, calibrated radio receivers, and as such, each field intensity meter could observe only a single frequency with a very narrow band-width. Thus, several meters would be required to effectively cover the desired spectrum of frequencies.

2. The expected field intensities were of such magnitude that a large attenuation of the signal would be required before the signal is injected into the field intensity meter input; otherwise the receiver would be overloaded or damaged. Additionally, if the attenuator were installed to decrease the input signal and then the field intensity meter was used to amplify the signal for a recordable output, the field intensity meter is being used only as a selective filter and an RF detector.

3. The field intensities anticipated were expected to be in a short pulse of energy which could cause considerable difficulties within the field intensity measurement equipment circuitry, which is designed for the measurement of steady state RF energy. Difficulties such as ringing or shock excitation of tuned networks would be experienced. Also, the anticipated sharp rise times would not be within the design limitations of the automatic gain control, feedback, and detection circuitry of the field intensity meter.

For the above reasons, it was decided that the incoming pulse of energy would be recorded directly on magnetic tape utilizing wide-band instrumentation equipment, which would reduce the active electronic circuitry to the pre-amps of the magnetic tape recorder. In addition, band-pass filters and logarithmic and compression amplifiers were investigated in an effort to reduce inter-modulation distortion and to increase the dynamic range of the recording instruments. These devices and techniques were abandoned because of time limitations and also in an effort to reduce the active electronic circuitry and simplify the instrumentation. See Table 1 for specifications of the airborne recording

instruments. See Figure 5 for a line drawing of the assembled airborne instrumentation.

The dynamic range of an average airborne instrumentation tape recorder operating in a direct or analog mode is approximately 50 db, that is, the ratio of the largest signal readable upon playback just before head saturation to the smallest signal readable above inherent record/playback noise. The anticipated signals as reported by CTO FC/DASA were to be in the range of from in the planned position of the C-131F for Small Boy. The predicted vertical E-field directly over GZ (for Small Boy and Little Feller II) was predicted to be zero by these same CTO FC/DASA personnel. For this reason, each channel of the airborne tape recorders was set for different amounts of signal attenuation. The attenuators also provided additional isolation between recorder pre-amp circuitry. Various active (cathode follower) and passive (transformer) impedance matching devices were investigated for insertion between the antenna pedestal and the antenna cables. None were found that were acceptable or commercially available in the short preparation time available.

The antennas were vertical whip antennas mounted under the two aircraft (C-131F and A-3A) as shown in Figures 2 and 3. The antennas used were readily available antennas normally used for telemetry and missile range digital timing signals. The pylon antennas (Figure 4) had specially constructed groundplanes adapted to the pylons, whereas the fuselage antenna used the aircraft skin as a ground plane. The telemetry antennas are quarter-wave resonant at ap-

proximately 400 Mc. The antenna used on the A-3A aircraft was a 400-Mc antenna, installed on the nose wheel door and is normally utilized for telemetry and timing equipment. Figure 1 does not include the A-3A antenna measurements, but these approach those of the C-131F antennas shown in Figure 1.

For recording of signals outside the record-playback capability of the airborne instrumentation, two methods were utilized:

1. Envelope detection of the incoming signals, using video crystal detectors. The pulse envelope is detected and recorded rather than the RF content of the pulse.

2. Direct connection of an antenna lead-in cable to the deflection plates of a Tektronix 545 oscilloscope cathode ray tube. In by-passing the oscilloscope pre-amplifiers, which are band-pass limited to 30 megacycles in even the best oscilloscopes available, the recorded signal is only frequency limited by the geometry of the cathode ray tube itself. The upper frequency limit is purely a function of the transit time of the electron stream from the cathode to the phosphorescent screen. This frequency limit was not calculated or measured but was assumed to be above the 100- to 200-megacycle spectrum desired, assuming normal cathode ray tube high voltage.

Calibration

The calibration of the test equipment and instrumentation was accomplished, using standard procedures except as described below. All calibrations were made using known signals of continuous wave or modulated continuous wave characteristics. Correlation to signals of non-periodic pulses was not attempted due to the lack of a source of calibrated non-periodic pulse signals and the limitation of the field intensity equipment in the measurement of pulse type signals.

Radiation patterns of the antennas, which are physically very short compared to the wave lengths of the receiving signals, are those of a simple dipole regardless of the location on the aircraft. The orientation of the equivalent-dipole axis with respect to the vertical will depend upon the antenna location. For the antenna positions chosen the electric-field fringing produced by the air frame for incident fields is polarized in the three principal directions —vertical, longitudinal, and transverse. The antenna locations were predetermined by practical considerations such as physical mounting connections and electrical cable connections. Electrical fringing and aircraft flight attitude were not considered to be large sources of error, so purely vertical polarization was assumed. Antenna sensitivity is the same as it would be on a flat ground plane except that it is reduced due to the field fringing produced by the air frame. The most difficult calibration involved in the measurements

attempted was in the area of antenna efficiency, effective length, polarization, and patterns.

As background for the method of antenna calibration, the following is a theoretical basis for the assumptions made.

A radiated continuous wave sinusoidal vertical E-field intercepted by a vertical antenna will set electrons in motion in the antenna. This electron motion constitutes a current that varies in accordance with variations of the vertical E-field. The induced electron motion or current in a vertical stub antenna is not uniform along the antenna and becomes zero at the tip of the antenna. The open circuit voltage capable of producing the current measured at the base of the antenna is equal to an **effective height times** the electric intensity of the field measured in volts per meter.

The dipole factor of a given antenna or calibrated antenna of a field intensity meter is defined as the ratio of field intensity in volts per meter to the voltage across the antenna input terminals or input terminals of a field intensity meter.

$$\text{Dipole Factor} = \frac{\text{field intensity (v/m)}}{\text{input voltage}}$$

Most field intensity meters are calibrated in terms of the voltage appearing across their input terminals. Therefore, the field intensity can be obtained by multiplying the meter reading by the dipole factor.

When the vertical antenna is short compared to the electrical wave length, the shape for a radiated (or receiving) pattern including the effect of the antenna ground plane reflection is approximately omni-directional in all three planes. At low frequencies where the antenna is electrically very short, the antenna pattern becomes uniform for varying depression angles from the horizontal.

The calibration curves shown in Figure 1 were obtained by using a substitution method with a field intensity meter, a signal generator, and several known continucus wave and modulated continuous wave radio stations. The calibration curves were obtained in the following manner:

The aircraft was placed in a position on the ground in a location as free as possible from metal objects, electronic interference, and shading by ferrous structures. At this position, a field intensity meter was tuned to a series of known radio stations at various frequencies. Measurements were made at several frequencies from 15.8 kilocycles up to 1,500 kilocycles. After each reading was completed, using the special instrumentation antenna, the antenna was disconnected and a signal generator was adjusted to obtain the same reading on the field intensity meter as was obtained using the known radio source. The voltage output of the signal generator was noted. Next, the signal generator output was adjusted to a higher signal level until the field intensity meter inside the aircraft indicated the same signal strength obtained when well clear of the aircraft and using the calibrated field intensity antenna. In this substitution method the antenna effectiveness index or dipole factor was determined.

This effectiveness index also included the attenuation of the coaxial cables between the antenna terminals and the recorder inputs. With the signal generator connected to the aircraft antenna terminals, the level was adjusted to various levels to determine the minimum detectable signal (MDS) that could be recorded and discerned upon playback. With the field strength of each radio signal known, the antenna effectiveness known for each calibration point, and the MDS of the recorder known, a direct computation of minimum detectable signals expected is made. The calibration in **Figure** 1 includes the attenuation due to mismatch caused by parallel loading of several recorder inputs using a single antenna.

Flight Paths. Little Feller II. The C-131F, 141024, participated in Shot Little Feller II. The aircraft staged to Nellis AFB and remained overnight the night of 6 July 1962. The aircraft reported on-station over Area 18 at approximately H-45 minutes and entered a 6-minute holding pattern at 4,500 feet over GZ. The flight path was adjusted to compensate for winds and placed the aircraft directly over GZ at each 6-minute interval before Time Zero (To). Pilot judgment was the only means of positioning the aircraft, and it appeared that the aircraft was directly over GZ at T_o; the aircraft instruments indicated:

Indicated Air Speed	155 knots
Aircraft Heading	164 degrees magnetic (180 degrees T)
Aircraft Altitude	9,960 feet MSL
Outside Air Temperature	61 degrees F

High density goggles were worn by all crewmen, but the flash at detonation was not very intense. It is believed that vision would not have been impaired if normal sun glasses had been used, because of the low yield and the bright sky conditions.

Shock-wave passage was quite sharp but of low intensity. No fluctuation in the pressure altimeters was noted, other than that observable during normal turbulence. The aircraft landed at Indian Springs AFB for radiation monitoring before returning to Nellis AFB.

Small Boy. The C-131F aircraft departed Point Mugu, California, at 0745 PDT, anticipating zero time of 1000. Upon reporting over Camp Mercury at 0915, a 1-hour delay in the countdown commenced. The decision was made to remain airborne at reduced power settings for fuel conservation. An additional 30-minute delay later changed zero time to 1130. The aircraft entered a race-track pattern over a position 10,600 feet from GZ at an altitude of 13,678 feet MSL. The flight path was adjusted to compensate for winds and placed the aircraft on a track to pass over a ground marker located due east of GZ at a distance 10,600 feet.

At T_o, the aircraft instruments indicated:

Indicated Air Speed	155 knots
Aircraft Heading	170 degrees magnetic (186 degrees T)
Aircraft Altitude	13,680 feet, MSL
Outside Air Temperature	32 degrees F

For eye protection, high-density goggles were worn by all crew members. The position of the aircraft was judged to be directly over the required position at T_o. Shock-wave passage was quite sharp but did not appear to stress the aircraft any more than heavy turbulent air or a harder than normal landing. The shock-wave passage caused the pressure altimeter to fluctuate 500 to 700 feet above and then 500 to 700 feet below the actual altitude. The aircraft landed at Indian Springs AFB for radiation monitoring before returning to Point Mugu.

The A-3A, 130352, aircraft departed Point Mugu, California, at 0830 PDT, anticipating a zero time of 1000. Upon reporting over Camp Mercury at 0915, a 1-hour delay in the countdown commenced. Sufficient fuel was available for a 1-hour hold, but anticipating further delays, the pilot decided to land at Nellis AFB for fuel and to await a firm H-1 hour countdown. Airborne again at 1045, the aircraft entered the planned 6-minute holding pattern over the Nevada Test Site to pass directly over GZ at an altitude of 18,078 feet at T_o.

At T_o, the aircraft instruments indicated:

Indicated Air Speed	250 knots
Aircraft Heading	164 degrees magnetic (180 degrees T)
Aircraft Altitude	18,080 feet, MSL

The aircraft appeared to be correctly in position directly over GZ at T_o. The effect of the shock wave appeared to be no greater than the effect of a harder than normal landing. After the event, the A-3A landed

at Indian Springs AFB for radiation measurements before returning to Point Mugu.

Photo triangulation was attempted from two E.G. & G. ground stations for after-the-fact aircraft position information. The photo information was inconclusive. One camera station used an improper exposure, and no information was obtained. The other photo station did not function properly and the two aircraft (C-131F and A-3A) were indistinguishable.

RESULTS

Analysis of magnetic tapes, film stripes, and memory tube photographs indicated no detectable signals other than expected instrumentation and inherent noise.

The C-131F was the only aircraft equipped with a readable radiation dosimeter. The dosimeter was used only during Shot Small Boy. The dosimeter indicated a radiation dosage of approximately 60 mr.

The AN/ASH-14 microwave refractometer was utilized during the descent to Indian Springs AFB after each participation of the C-131F. The results of these recordings are shown in Figures 6 and 7.

The refractive index N is defined as the ratio of the velocity of propagation of electromagnetic wave in a vacuum to the velocity of propagation in a specific air sample. Since radio waves travel slightly slower in air than in a vacuum, the index is slightly greater than unity. In order to have numbers that are convenient, the refractive index is expressed as $(N-1)^{10^6}$, or simply N. Surface values for refractive index

range from 1.000250 to 1.000400 or 250N to 400N. The rate of change of the refractive index is -12N units per 1,000 feet. A subrefractive index gradient is algebraically greater than -12N per 1,000 feet. A subrefractive index gradient decreases the radio horizon which results in a shorter propagation range. A super-refractive index occurs when the refractive index gradient is algebraically less than -12N units per 1,000 feet. Such super-standard refractive index gradients may cause extensions of the radio horizon up to 30 percent.

Figure (6): 7 July 1962 1200 PDT refractive sounding. As indicated in Figure 6, the relative N did not decrease with altitude as compared to the standard atmosphere of -12N per 1,000 feet. As typical of desert thermal conditions at the Nevada Test Site, subrefractive conditions prevailed and a decrease in refractive N units of only -7.9N units per 1,000 feet was measured. This subrefractive would cause any maximum radar ranges to be less than normal for transmitters located at any altitude within the air mass due to a decrease in range of the radio horizon.

Figure (7): 14 July 1962 1150 PDT refractive sounding. This figure indicates no change in the type of refraction prevailing over the area. Due to the thermal characteristics of the air mass, subrefractive conditions could be expected. Measurements conducted indicate a small degree of subrefraction, and the result would be that maximum radar range would probably be decreased by approximately 3 percent due to a decrease in range of the radio horizon.

CONCLUSIONS

1. The two NMC aircraft of Project 7.16 successfully participated in Shots Little Feller II and Small Boy as requested.

2. The positioning of the aircraft at planned positions relative to GZ was as accurate as pilot judgment and ability would allow.

3. Instrumentation in both aircraft performed properly and was accurately calibrated in the manner described.

4. The vertical E-field intensity of the electromagnetic pulse was apparently below the threshold sensitivity of the installed instrumentation or the method of instrumentation and calibration was inadequate for non-repetitive pulse signals.

All equipment performed properly with the following exceptions:

1. During Shot Little Feller II, the AR-300 Ampex video recorder did not operate correctly because power-cable phasing discrepancies did not allow the recorder to operate in the record position.

2. During Shot Small Boy, the port pylon antenna separated from the aircraft in flight. It is possible that the shock-wave passage caused the antenna stub to break in its mount. The antenna had been installed on the aircraft for the previous 8 days and had withstood 12.9 hours of flight before the D-day flight of 4 hours.

3. The instrumentation data in the A-3A was found to be useless upon completion of operation. A ground loop in the antenna cabling induced 400-cycle signals upon the magnetic tape beyond tape saturation.

Because of the absence of detectable signals on any of the instrumentation in either of the aircraft, it is assumed that the vertical E-field signal levels were below the calibrated minimum detectable signal levels as shown in **Figure** 1 or the methods of instrumentation and calibration were inadequate for non-repetitive pulse signals.

Each airborne tape recorder had one channel available to record the voice countdown, as broadcast on guard channel 243.0 Mc.

It was interesting to note that the T_o tone was not modulated in any manner at the time of detonation. In a like manner, there was an absence of any noise or spike of energy recorded on any of the audio tracks of the three recorders using separate AN/ARC-27 UHF transceivers.

GENERAL COMMENTS

Objectives, positioning, and information concerning expected signal strengths were supplied by FC/DASA personnel because of the late request for such support by FC/DASA. Experimental models were not investigated except by reference to the Small Boy Pre-Test Analysis Report during the one month preparation time, which included several practice flights before instrumentation could be designed, assembled, and installed. It is also regretable that Project 7.16 participation was on the basis of not to interfere with normally assigned tasks. This required constant reconfiguration of aircraft instrumentation so that normal missile projects could be prosecuted whenever event Small Boy was delayed. The several reconfigurations contributed greatly to

the confidence level of the reported results. The absence of any data (due to 400-cycle power supply ground loops) from the A-3A participation is directly attributable to the last minute reconfiguration of the Small Boy instrumentation the evening before the actual event.

TABLE 1 SPECIFICATIONS OF AIRCRAFT INSTRUMENTATION

C-131F

Recorders:

	Manufacturers	
	Precision Instruments Corp.	Ampex Corp.
Model No.	PS-207	AR-300
Number of channels	7	3
Tape speed	60 ips	25 ips (head to tape 1300 ips)
Frequency response	100 cps - 350 kc	10 cps - 4 Mc 100 cps - 15 kc (audio channel)
Input level	0.15 to 50 volts RMS	2 volts
Dynamic range	35 db at 1% harmonic distortion	30 db
Rise time	NA	0.18 microseconds (10 to 90%)

Oscilloscopes:

Tektronix Model 545

Hughes Memo-Scope Model 104-D

Cameras:

High-Speed Strip Film Camera: Photographic Instrumentation and Development Company, Model OC-4000 camera operated at 600 inches per second, 1,000 feet per reel, operated open shutter for continuous strip film of Tektronix 545 trace.

Polaroid: Oscilloscope camera mounted on the Hughes 104-D Memo-Scope.

Antennas:

Two stub antennas vertically polarized and mounted on pylons on the C-131F: (1) length of stub: 13¼ inches; and (2) diameter of ground plane: 30 inches.

TABLE 1 CONTINUED

Attenuators: Kay Electric Company, Model 30-0 attenuators.

On-stub antenna mounted underneath aircraft fuselage, same physical dimensions as the pylon antennas, except the ground plane was the aircraft fuselage.

Microwave refractometer (AN/ASH-14):

This instrument made use of two stabilized klystron oscillators turned to X-band frequencies; the frequency of each oscillator was determined by an associated cavity. One cavity is sealed inside the equipment and acted as a reference, while the other is exposed to the atmosphere. The changes of density of the atmosphere causes a proportional change in the frequency of the associated oscillator. The difference of frequency of the two oscillators was linear, with change in refractive index. This information was recorded on an X-Y plotter, showing refractive index versus altitude.

A-3A

Recorder:

Ampex 800

Channels: 7

Tape Speed: 60 ips

Frequency response: 300 cps - 400kc

Input level: 1 volt RMS

Dynamic range: 35 db for 1% Harmonic distortion

Output level: 1 volt RMS

Antenna:

AT-126 mounted on the underside of the nose-wheel door.

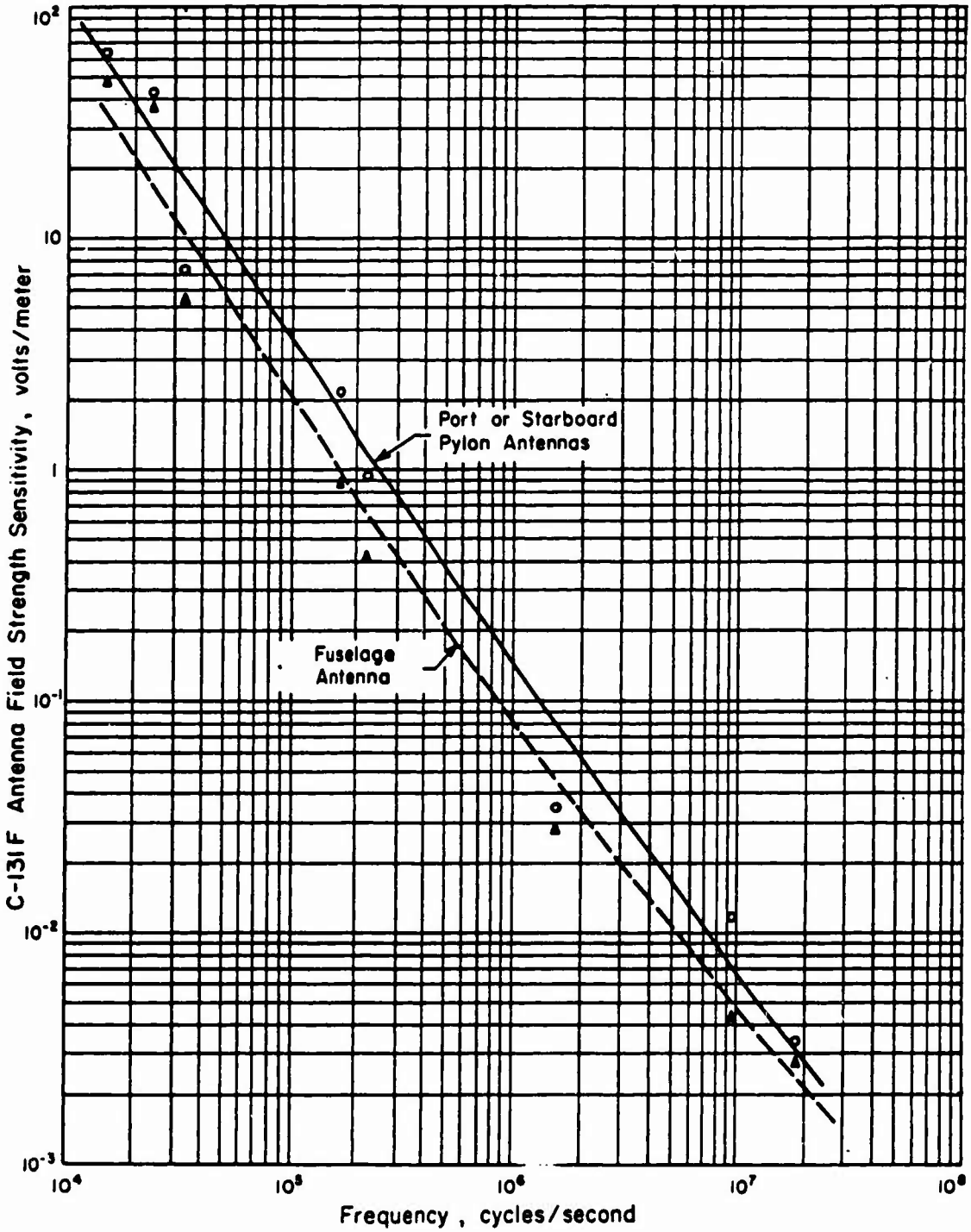

Figure 1. C-131F antenna sensitivity chart.

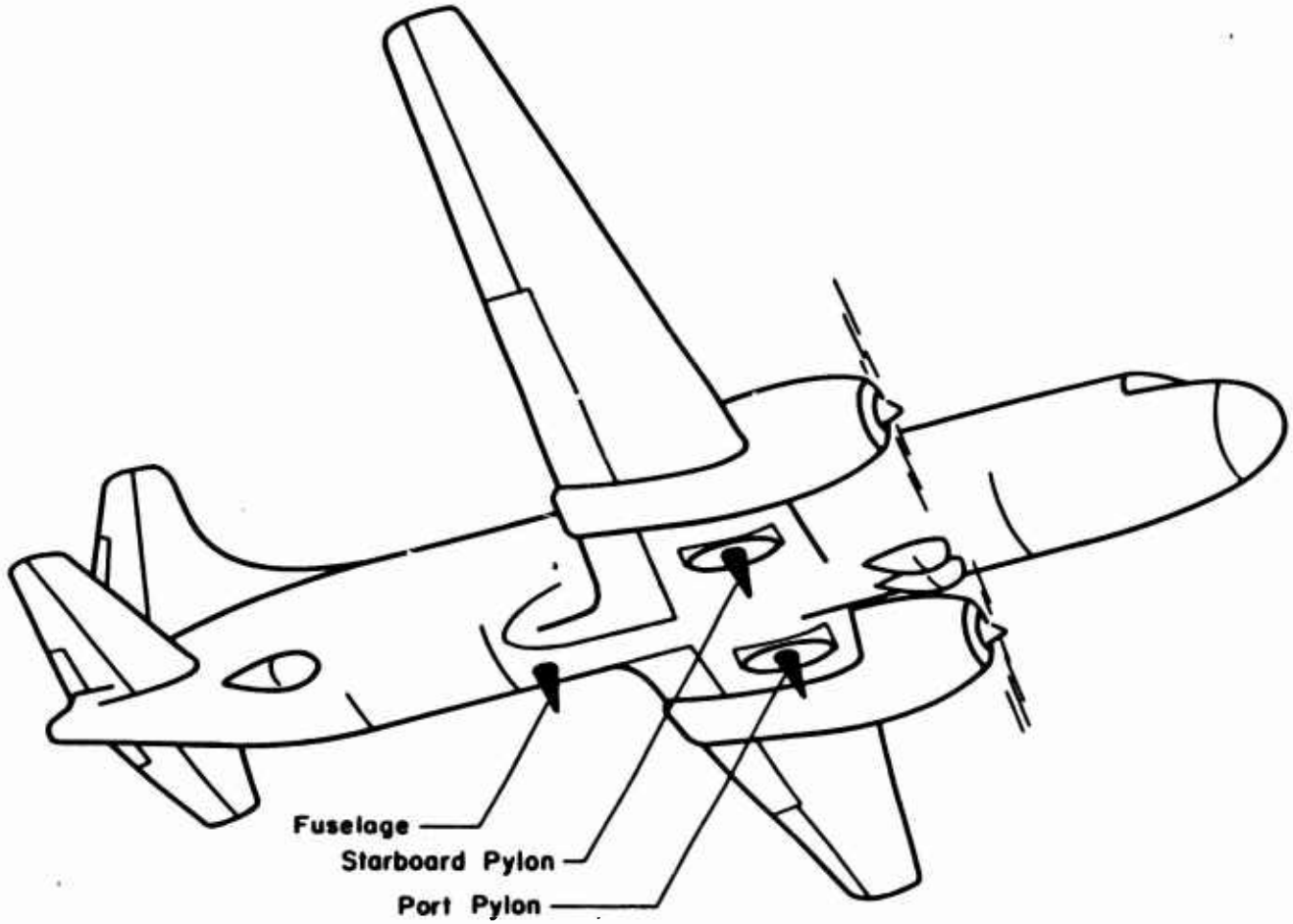

Figure 2. C-131F antenna locations.

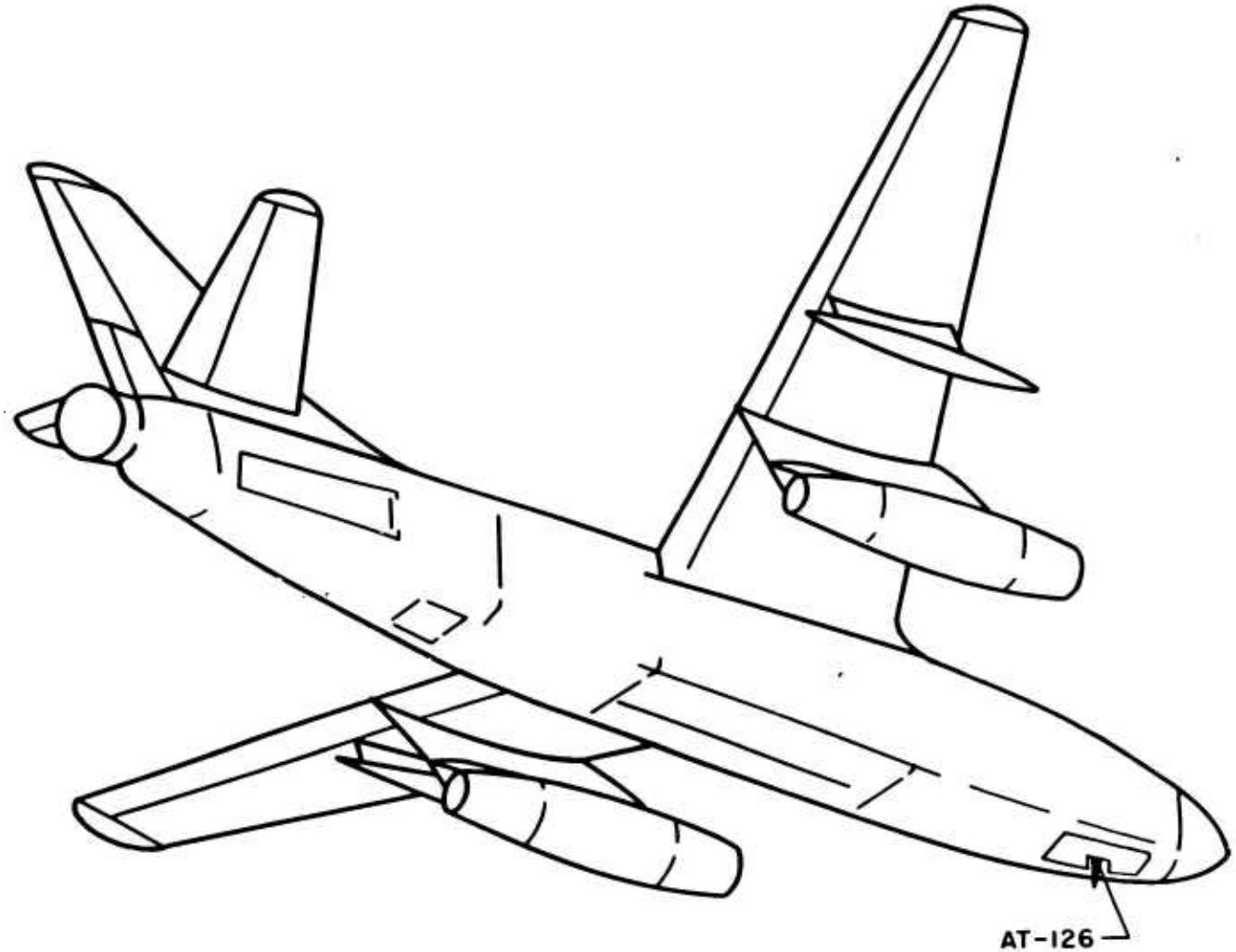

Figure 3. A-3A antenna location.

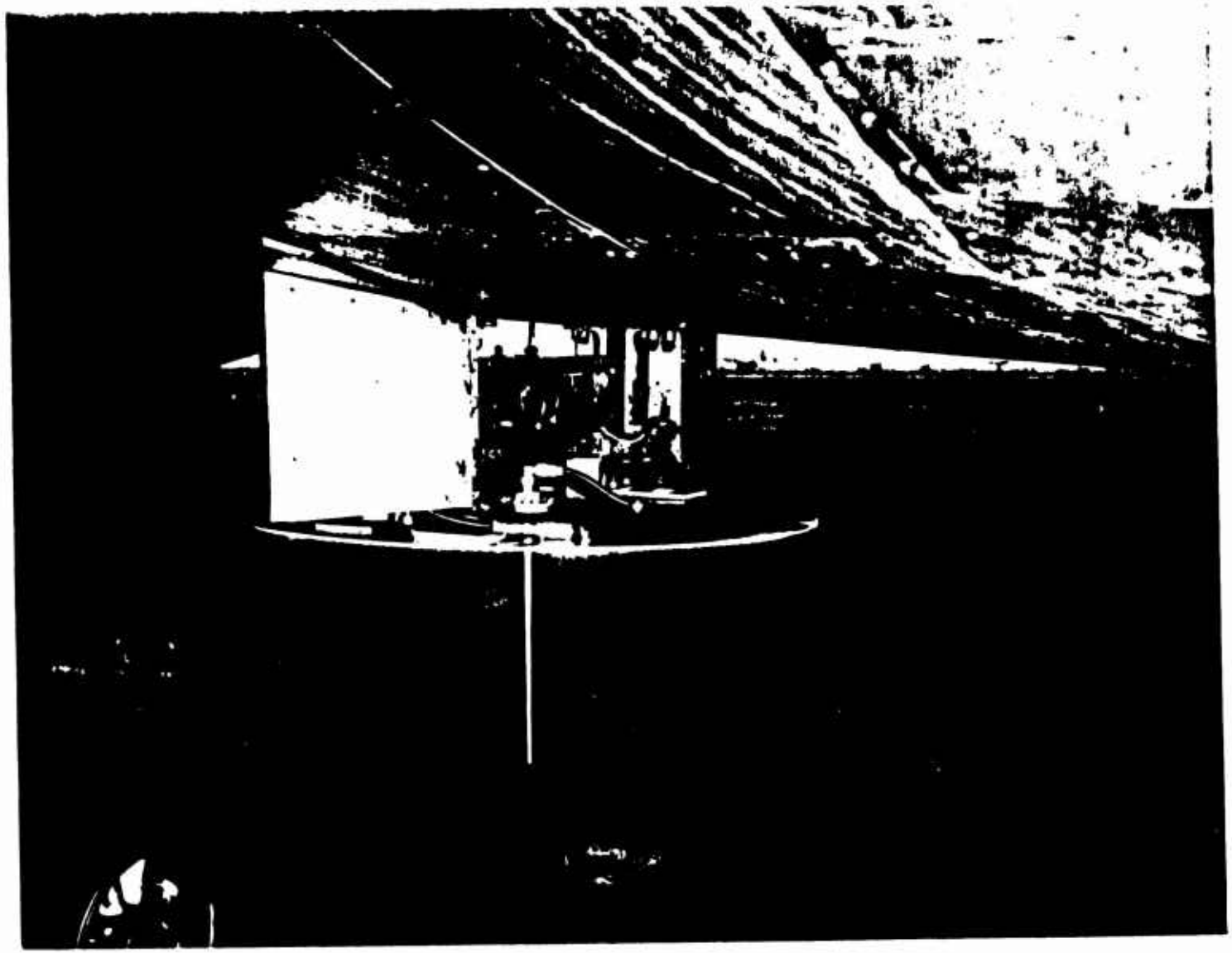

Figure 4. Photograph of C-131F starboard pylon antenna.

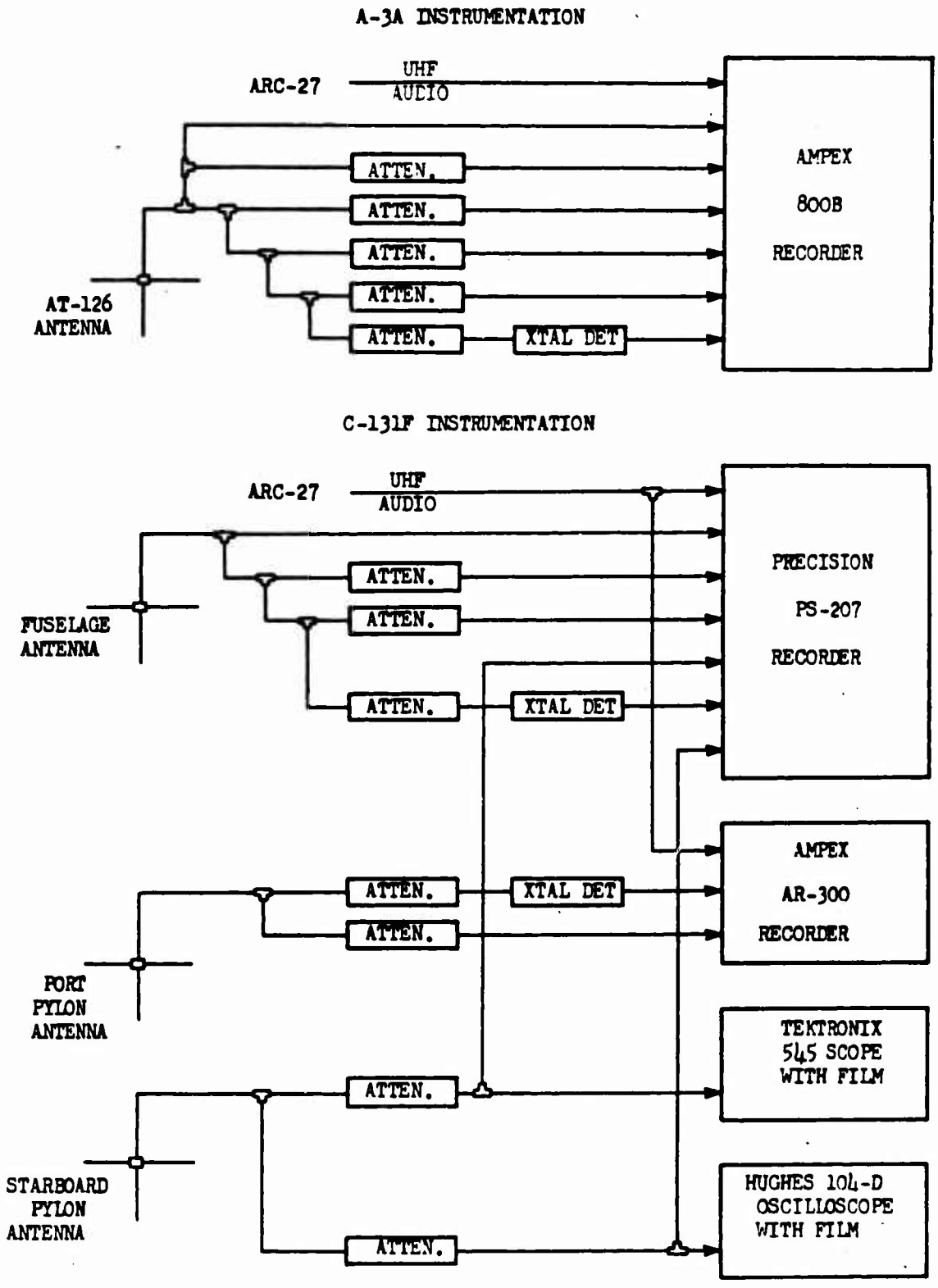

Figure 5. Line drawing of airborne instrumentation.

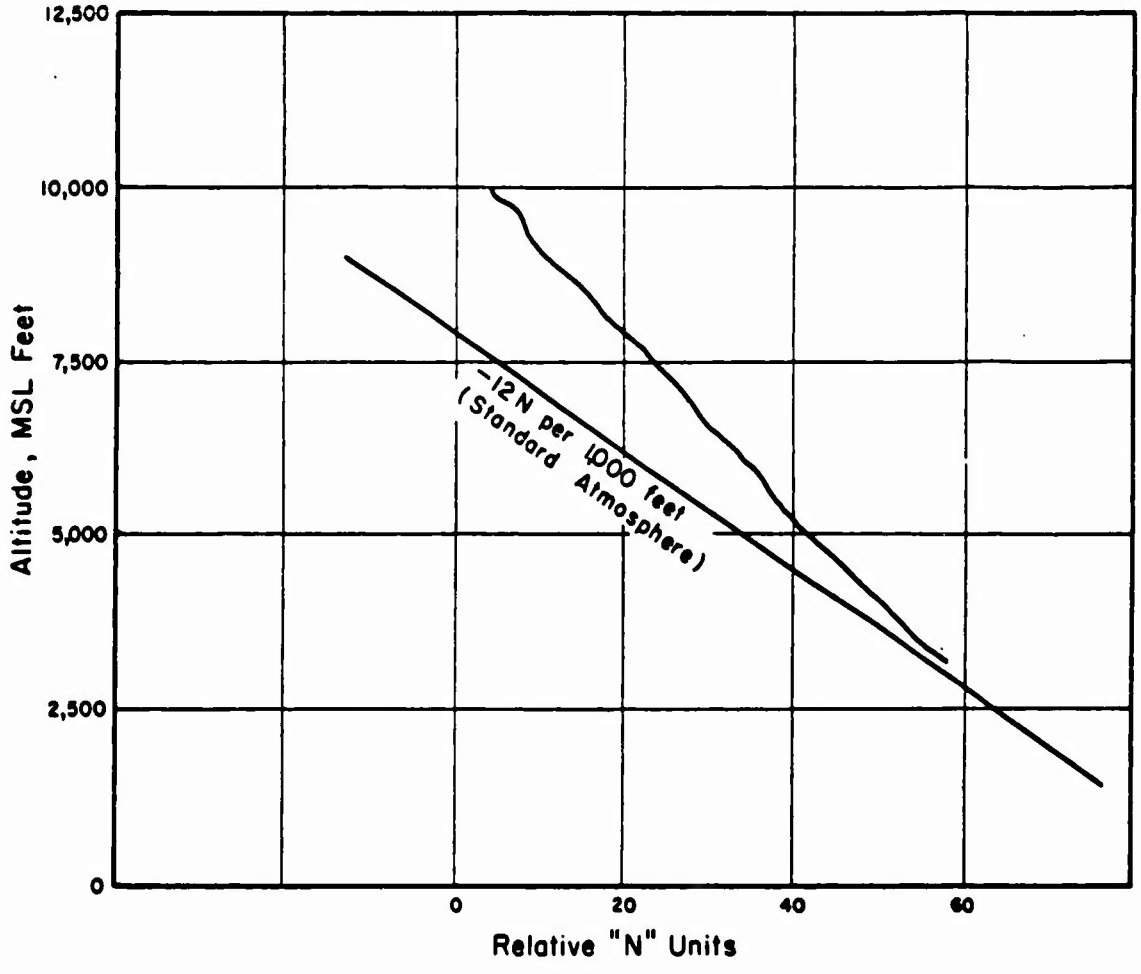

Figure 6. Atmospheric refractive index for 7 July 1962, Shot Little Feller II.

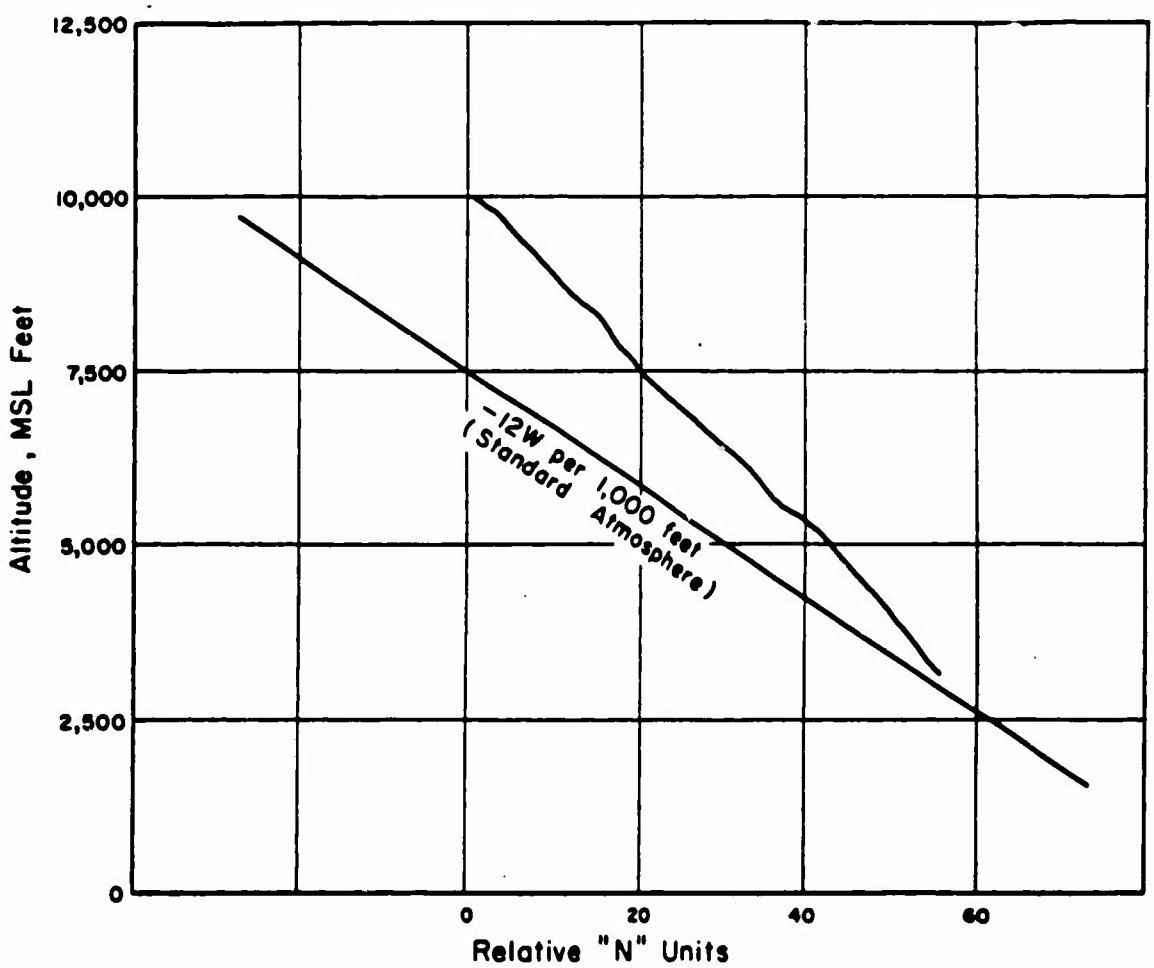

Figure 7. Atmospheric refractive index for 14 July 1962, Shot Small Boy.

Pages 35 and 36 deleted.