Best
Available
Copy

STATUS REPORT ON UNIVERSITY PARTICIPATION IN THE ATS-1 COMPUTER COMMUNICATIONS EXPERIMENT

BY

DAVID W. WAX

AD-A954 772

DTIC
ELECTE
JUN 1 7 1985
S D
G

DTIC FILE COPY

APPROVED FOR PUBLIC RELEASE;
DISTRIBUTION IS UNLIMITED (A)

SEPTEMBER 1974

TECHNICAL REPORT B74-8

85 06 13 008

REPRODUCED AT GOVERNMENT EXPENSE

STATUS REPORT ON UH/ALOHA PARTICIPATION IN THE ATS-1 COMPUTER COMMUNICATIONS EXPERIMENT

by

David W. Wax
University of Hawaii

Accession For
NTIS GRA&I ☒
DDC TAB ☐
Unannounced ☐
Justification
By
Distribution/
Availability Codes
Dist | Avail and/or Special
A/1

UNANNOUNCED

September 1974

Sponsored by
Advanced Research Projects Agency
ARPA Order No. 1956

*****

The views and conclusions contained in this document are those of the authors and should not be interpreted as necessarily representing the official policies, either expressed or implied, of the Advanced Research Projects Agency of the United States Government.

-a-

STATUS REPORT ON UH/ALOHA PARTICIPATION IN THE ATS-1 COMPUTER COMMUNICATIONS EXPERIMENT

by

David W. Wax
University of Hawaii

ABSTRACT

This report describes the status of UH/ALOHA participation in the ATS-1 Computer Communications Experiment through January, 1974. This experiment was initiated in January, 1972, by the Spacecraft Data Systems Branch of the NASA Ames Research Center, to demonstrate the feasibility of utilizing satellite communication links to provide computer-computer and terminal-computer communications between remotely located sites. In order that the experiment be conducted under realistic conditions, computing facilities at the University of Hawaii and the University of Alaska were connected to the Advanced Research Projects Agency computer network, via an ATS-1 VHF link, through the Terminal Interface Message Processor (TIP) located at the Ames Research Center. The ATS-1 VHF transponder was utilized as a broadcast repeater for the three nodes mentioned above, with the satellite network operating in the ALOHA random-access burst mode.

This report was supported by The ALOHA System, a research project at the University of Hawaii, which is supported by the Advanced Research Projects Agency of the Department of Defense and monitored by NASA Ames Research Center under Contract No. NAS2-6700.

STATUS REPORT ON UH/ALOHA PARTICIPATION IN THE ATS-1 COMPUTER COMMUNICATIONS EXPERIMENT

BACKGROUND

In January, 1972, the Spacecraft Data Systems Branch of the Ames Research Center, NASA, initiated an experiment in Computer Communications via the ATS-1 geosynchronous satellite. This experiment is designed to demonstrate the feasibility of utilizing satellite communication links to provide computer-computer and terminal-computer communications between remotely located sites. In order that the experiment be conducted under realistic conditions, computing facilities at the University of Hawaii (UH) and the University of Alaska (UA) are being connected to the Advanced Research Projects Agency (ARPA) computer net via an ATS-1 VHF link to the NASA - Ames Research Center (ARC). The ATS-1 VHF transponder is being utilized as a broadcast repeater for the three above-mentioned nodes, with the satellite network operating in the ALOHA random-access burst mode. A detailed description of the experiment is contained in the ATS-1 Computer Communications Experiment Plan, attached as Appendix A.

EXPERIMENT OBJECTIVES

NASA's objectives in this experiment may be summarized in two broad areas:

- *Satellite Communications Links*
  - Determine optimum channel coding and modulation/demodulation techniques.
  - Develop quick acquisition techniques for burst data transmissions.
  - Evaluate channel characteristics including:
    - Effects of auroral zones on data transmissions.
    - Error burst and interference phenomena.

- *Computer Networking*
  - Develop network protocol strategies for operating with:
    - Two diverse networks: ARPA Net and ALOHA Net.
    - Individual remote terminals via satellite into ARPA Net.
  - Devise efficient communication strategies for interactive computer use to accommodate the transmission path delay time.

The objectives of UH/ALOHA, as a participant in the experiment, are similar though somewhat different in emphasis.

UH/ALOHA PARTICIPATION

In March, 1972, a set of communications equipment was delivered to the ALOHA Project from NASA/AMES to enable UH/ALOHA's participation in the experiment. This equipment consisted of a modified VHF mobile radio base station, two sets of VHF antennas, a PCM Bit Synchronizer, a psuedorandom bit sequence generator and error detector, and various interface units. The radio was modified to provide burst transmission under digital control, true FM, and bypassing of internal audio circuits in order to use the full bandwidth capability of the receivers. Each antenna consisted of a four-bay crossed dipole array to provide gain and circular polarization. The two arrays were set up on top of the old ALOHA laboratory building separated as far as possible. Unfortunately the distance was not great enough and the transmit power leaking over to the receiving array desensitized the receiver so that we were unable to listen to our own transmission. When the ALOHA lab was moved to its present location in Holmes Hall, the antennas were separated enough so that this problem no longer exists.

ERROR RATE MEASUREMENTS

The data modulation technique chosen by ARC for this experiment is synchronous FSK since it is the easiest and least expensive to implement. Initial testing consisted of continuous psuedorandom bit sequence transmissions from

ARC to UH/ALOHA, and vice-versa, using the ATS-1 VHF transponder. The University of Alaska also cooperated in these tests. The recovered clock from the bit synchronizer and the error output from the error detector were fed to a ratio counter to provide direct reading of error rate. Figure 1 shows the ALOHA ground station setup for the tests. Tables 1, 2 and 3 are examples of error readings made at UH/ALOHA during the early tests. It should be noted that the channel was being pushed to its full capacity since data was being transmitted at rates of about 10 KBPS and 20 KBPS through receivers with 10 KHZ and 20 KHZ bandwidth, respectively. Also, the satellite was operating in its low power mode when these tests were made, which is 6 dB below full power. Also note that the tests were made at night when interfering signals were at a minimum. During the day the local interference was much worse and there were periods when the receiving channel was completely blocked by interfering signals.

By looking at the data, one can see when noise bursts or interfering signals occur. The error readings correlated closely with noise observed on an oscilloscope display of the baseband signal. The noise and interference problems were greatly reduced when the antennas were later moved to Holmes Hall and the receiving array rebuilt and retuned to improve circular polarization eccentricity and beam pattern.

Recent tests, using the present equipment configuration, with the ATS-1 VHF transponder in the full-power mode, and during the daylight hours, have indicated error rates in the order of 1×10^{-3} at 10 KBPS. Measurements of the power received from the spacecraft indicate an average C/N ratio of 17 dB for the 20 KHZ bandwidth receiver. This is well above the threshold level of the receiver and thus supports the observation that errors are due primarily to impulse noise bursts and signal interference, and not to receiver front-end thermal noise. This observation is not surprising and should be expected for low-level received signals in the VHF band, due to the large number of potentially interfering emitters in this band. The density of man-made noise in an urban area, such as automobile ignition noise, also is quite strong at VHF.

The foregoing observations indicate the need for some form of data encoding to combat the effects of noise in the channel and to improve the channel reliability. ARC has chosen to use convolutional coding for forward error-correction on this channel. A LINKABIT Model LV7015 Convolutional Encoder/Viterbi Decoder unit was sent to UH/ALOHA by ARC about the time the error measurements shown in Tables 1, 2 and 3 were being run. This unit uses a rate

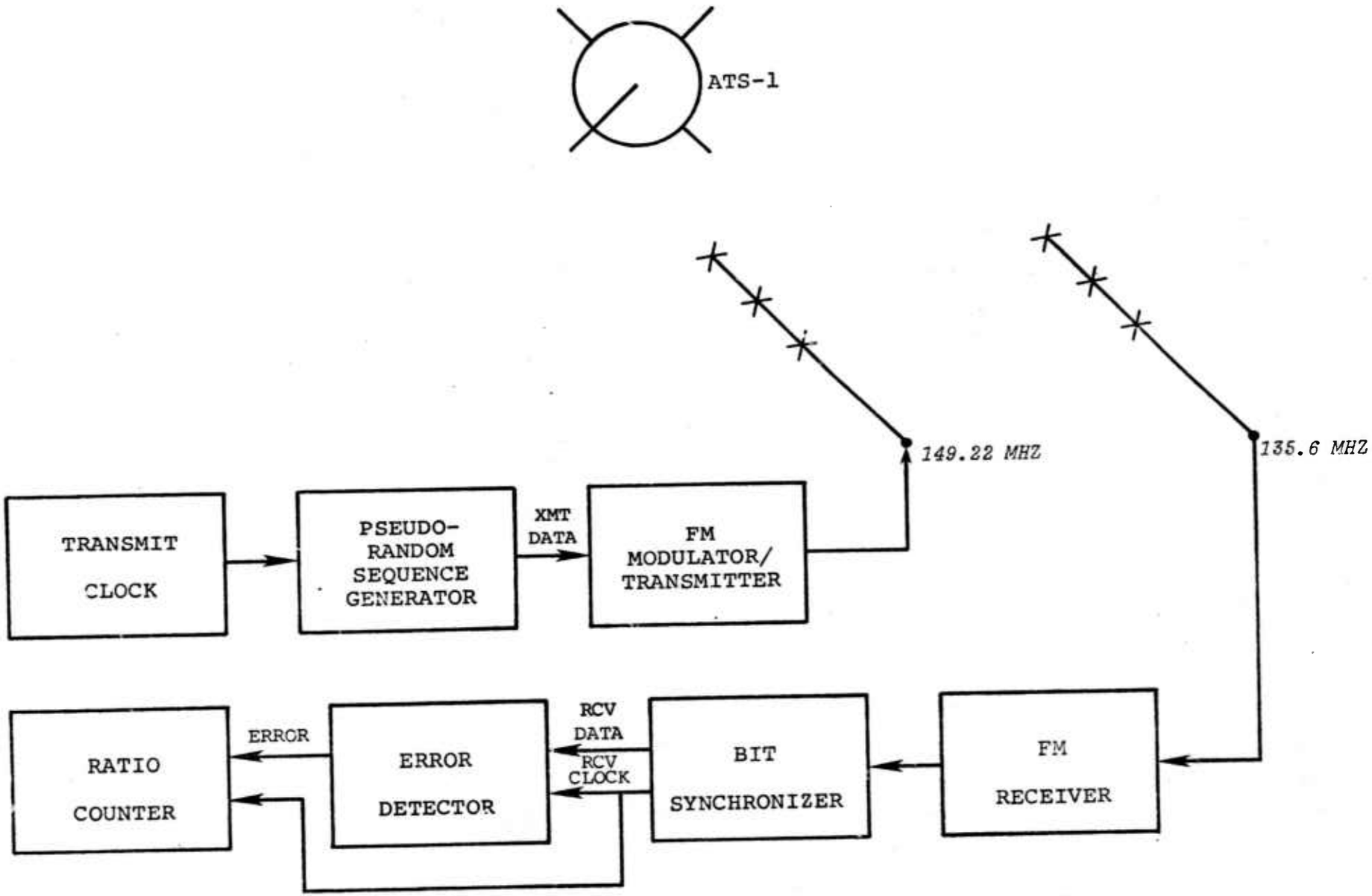

Figure 1 CONTINUOUS ERROR-RATE MEASUREMENT SET-UP

Table 1

ERROR RATE MEASUREMENTS OVER ATS-1 LINK

DATE: May 3, 1972

TIME: 2016 to 2029 Hours, Hawaiian Standard Time

DATA RATE: 10 KBS (Narrow Band Receiver)

DATA SOURCE: Ames Research Center

Error Counts Per 10^5 Bits

922	29	770
1156	185	63
905	2	396
883	1	412
245	154	166
573	142	28
143	490	128
1222	372	253
985	42	4
794	245	14
172	514	142
2	87	56
5	810	193
49	745	300
41	1	380
18	0	2
2	1	192
3	0	383
0	1	
2	3	END
7	2	
3	3	
50	3	
5	203	
31	180	
5	248	
70	1	
2	2	
5	537	

Table 2

ERROR RATE MEASUREMENTS OVER ATS-1 LINK

DATE: May 17, 1972

TIME: 2030 to 2045 Hours, Hawaiian Standard Time

DATA RATE: 21.14 KBS (Wide Band Receiver)

DATA SOURCE: Ames Research Center

Error Counts Per 10^5 Bits

2	2	2	0	28	13
7	0	0	16	42	5
3	0	3	3	64	52
3	0	1	78	114	62
1	7	2	69	105	159
1	9	11	11	86	146
2	4	5	0	75	107
5	1	14	1	122	10
48	0	2	2	148	9
31	0	28	2	114	1
48	0	14	5	123	3
0	3	28	6	71	6
0	0	76	9	75	2
1	0	4	11	53	0
1	0	1	14	29	0
3	5	2	10	40	0
7	2	0	16	46	
9	44	1	40	157	END
6	1	0	9	254	
5	62	0	20	129	
1	26	1	14	28	
1	128	0	18	37	
0	73	14	90	20	
0	13	57	44	156	
1	11	81	72	488	
14	52	1	108	510	
1	104	1	19	165	
35	382	0	32	19	
1	785	0	27	31	
0	213	4	45	24	
2	4	26	24	1	

Table 3

ERROR RATE MEASUREMENTS OVER ATS-1 LINK

DATE: May 17, 1972

TIME: 2015 to 2030 Hours, Hawaiian Standard Time

DATE RATE: 19.14 KBS (Wide Band Receiver)

DATA SOURCE: Ames Research Center

Error Counts Per 10^5 Bits

9	20	1	4	11	100
39	11	3	0	70	44
99	6	3	0	163	0
4	12	6	0	86	4
2	9	2	0	53	0
1	7	90	0	12	1
2	10	25	1	7	0
25	14	3	2	6	0
103	5	0	2	1	0
2	8	27	13	2	11
208	3	1	5	7	1
447	13	3	10	1	2
1062	30	3	2	3	10
324	195	99	1	0	2
6	2	1	0	1	0
7	202	0	1	4	0
9	1025	2	3	2	0
3	962	17	0	13	0
2	459	116	3	0	12
2	31	363	0	4	0
1	2	31	0	1	168
1	1	1	0	1	49
7	9	1	1	13	2
5	27	8	0	24	2
1	11	3	1	3	7
21	9	2	5	21	105
1	166	2	3	8	11
1	52	1	6	0	61
16	4	87	1	79	
9	13	35	0	31	END
19	16	1	0	22	

one-half, constraint length 7, convolutional code and is capable of full-duplex operation at any data rate up to 100 KBPS (200 K code symbols/second). The Viterbi decoder accepts as input either hard (2 level) or soft (8 level) quantized received data. A coding gain (savings in required energy per bit to noise ratio relative to ideal coherent PSK modulation in additive white Gaussian noise) in excess of 5 dB is provided by the unit at a 10^{-5} bit error rate when operating in the soft quantized mode. A corresponding coding gain of greater than 3 dB is attained in the hard quantized mode. Data runs were performed using the LV7015 in the hard quantized mode over the VHF channel about the same time the measurements shown in Tables 1, 2 and 3 were made. The channel performance was significantly improved with error rates in excess of 1×10^{-5} very seldom being recorded. Considering that the channel was exhibiting an un-coded error rate of about 3×10^{-3} at the time the tests were made, the convolutional encoder/decoder improved the channel bit error rate by a factor greater than 300, on the average, and probably more for peak error rates.

From the above observations, one may conclude that use of the convolutional encoder/decoder can improve the ATS-1 VHF channel bit error-rate to about 1×10^{-5}, or better, at the cost of halving the data rate. One then asks the question: Can a like improvement in bit error rate be obtained without such a large reduction in data rate? To answer this question, UH/ALOHA is presently collecting bit error rate data on a per packet basis to analyze the grouping of error bits within the packets. Since significant numbers of bit errors seem to occur in bursts on this channel, the idea is to incorporate a burst-error correcting code in the cyclic-check code of the packet and provide error correction capability in the packet recovery algorithms of the receiving digital equipment. Thus, the use of an additional encoder/decoder for the channel could be eliminated with a resulting decrease in hardware cost and complexity and, hopefully, a higher data rate. The view at UH/ALOHA is that the convolutional encoder/decoder may be providing much more improvement than is necessary for efficient channel throughput. This study is being carried on at UH/ALOHA independently of the goals of the ARC experiment.

During the remainder of the present ARPA contract period, UH/ALOHA will collect the necessary error statistics and evaluate appropriate error-correction codes for possible use. Hopefully selection and implementation of a code can be performed during this time. Concurrently, the ATS-1 digital communications channel will be operated using the convolutional coder/encoder, assuming the

proper burst synchronizing equipment has been received from ARC which will allow using the LV7015 unit with ARC's burst formatter and synchronizer.

BURST COMMUNICATION EXPERIMENTS

In December, 1972, a Packet Formatter/Synchronizer device was received by UH/ALOHA from ARC. This device, designed and fabricated at ARC for the burst communication experiment, provides the capability to transmit and receive data packets over the ATS-1 VHF satellite link. The unit provides interface control signals between itself and the UH/ALOHA data terminal equipment and the radio transmitter/receiver set. The equipment arrangement, list of control and data signals, and signal timing relationship are shown in Figure 2. The packet formatter creates a preamble consisting of a sequence of alternating 1 and 0 bits for bit synchronization, followed by a 32 bit sync recognition word for packet synchronization. Once these two sequences have been generated, it provides a clear-to-send to the ALOHA equipment which then sends the ALOHA packet format, through the formatter. The synchronizer portion of this device continuously monitors received data from the bit synchronizer for the sync recognition word. When it detects this word, it flags the ALOHA equipment of an incoming packet and opens the receive data gate. Previous to this action, the bit synchronizer is presumed to have synchronized on the incoming sequence of 1's and 0's. The ATS-1 Packet Format is shown schematically in Figure 3. Below it is shown a representation of the ALOHA Packet Format. The formatter is equipped with switches which enable manually setting the bit sync sequence length anywhere from zero to 999 bits to allow experimentation with sequence lengths required to synchronize the Bit Synchronizer unit to the received data stream. Except for the AGC level control signal, this is the way the terminal at UH/ALOHA is presently configured. The response of the AGC circuit was found to be too slow for burst synchronizing and therefore the AGC signal is not used. Removal of the AGC level control seems to increase the false alarm rate only slightly, indicating that the sync recognition code is performing effectively.

One may note from Figure 2 that the convolutional encoder/decoder is not shown. The initial tests are intended to gather data on the burst communication channel without the aid of error correction in order to gather statistics on

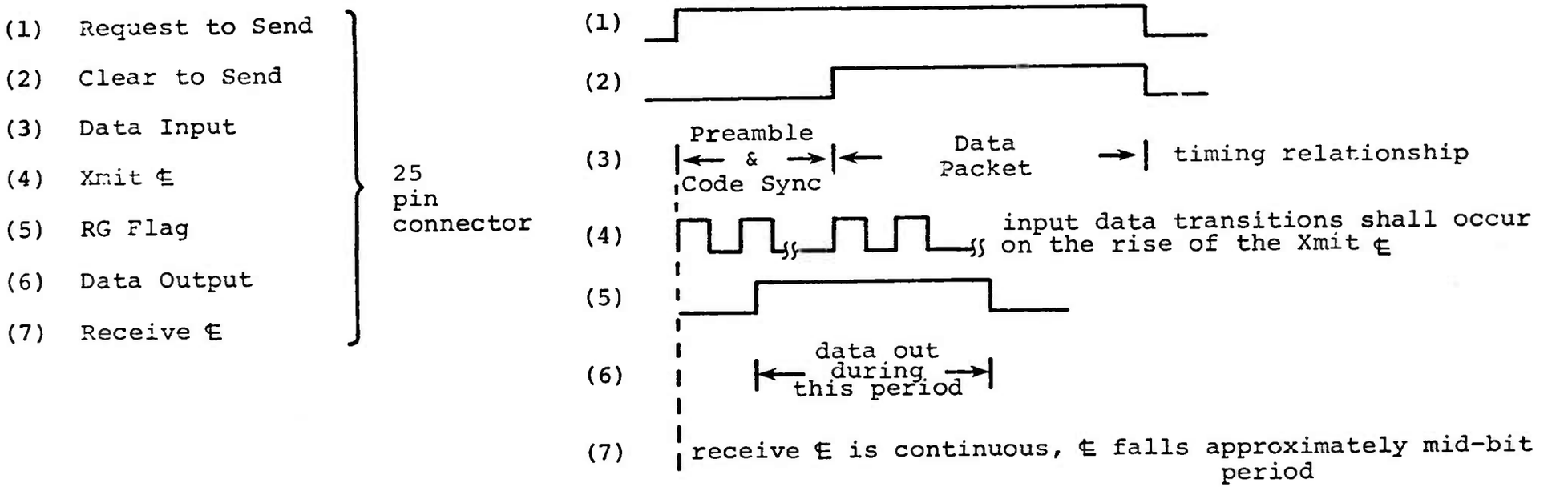

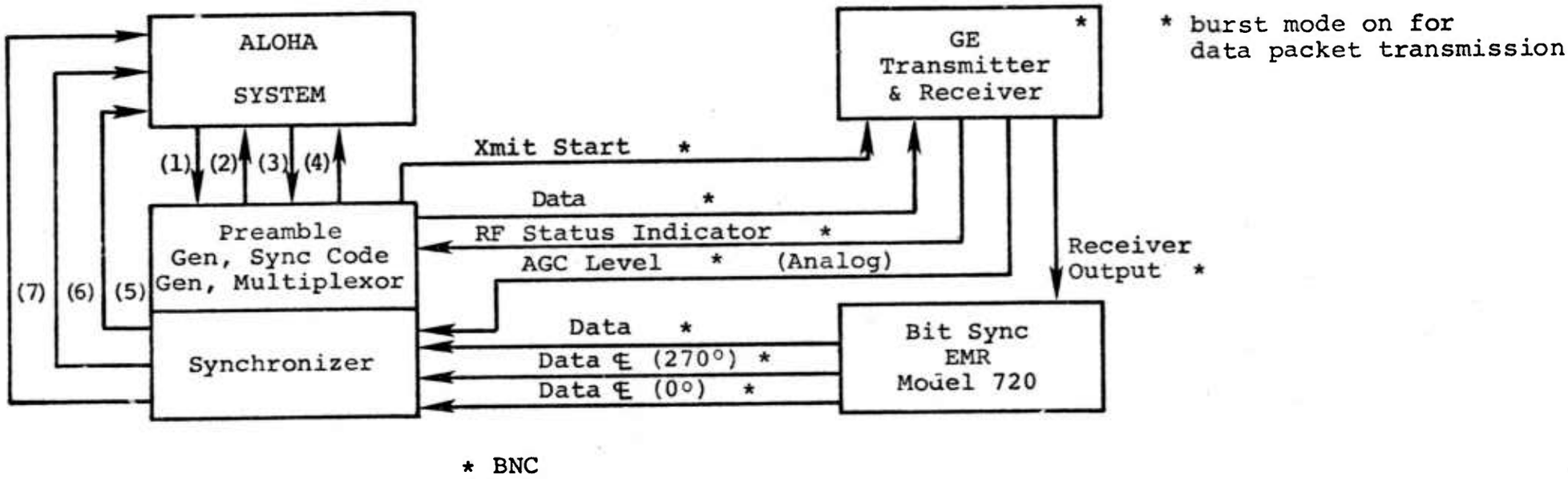

Figure 2 UH DATA UNIT FOR BURST MODE

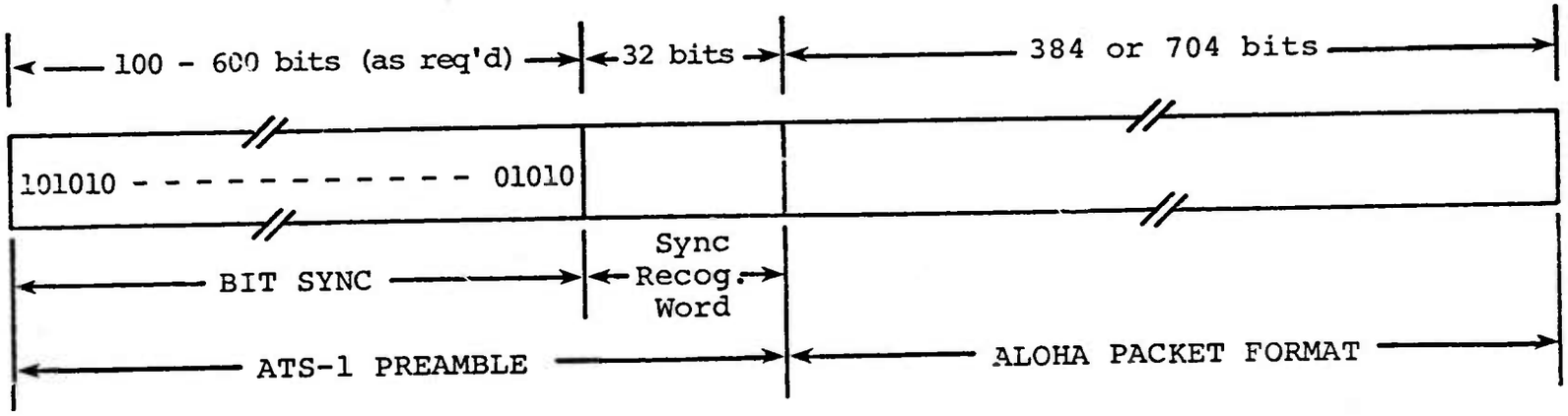

ATS-1 PACKET FORMAT

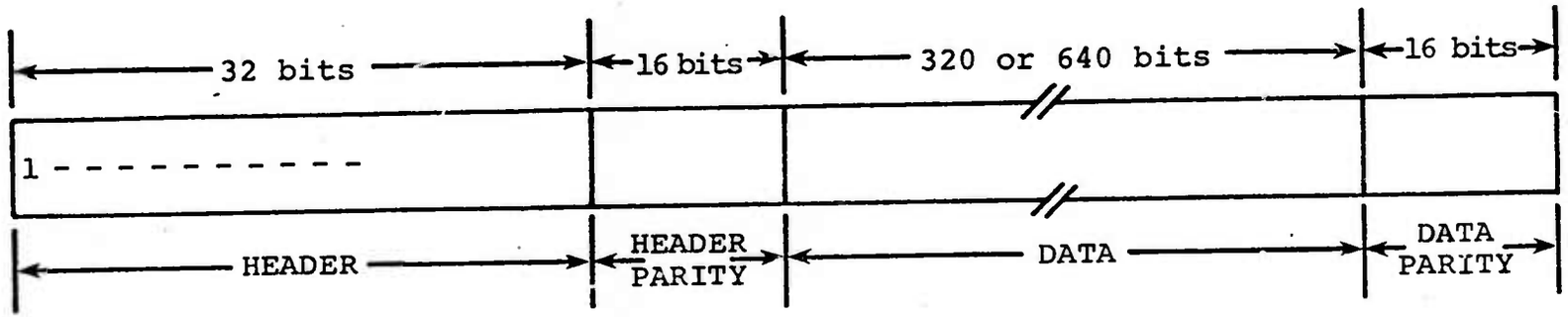

ALOHA PACKET FORMAT

Figure 3

burst communications over the noisy channel at different data rates. An additional option has been included in the formatter to allow operation at different data rates. The UH/ALOHA unit has the capability of operating at four different data rates: 1, 2, 10, and 20 KBPS. Since the Bit Synchronizer can be set to any data rate simply by dialing in the desired rate, it presents no constraints to data rate selection. In the future these rates will be changed to 2400, 4800, 9600, and 19,200 bits/second to allow the Alaska equipment to be more readily interfaced. When ARC has completed the special sync circuitry required to incorporate the LINKABIT unit, and sent this equipment to UH/ALOHA and Alaska, then experiments will be performed using forward error correction in the channel under burst mode conditions. Essentially this sync circuitry ensures that a constraint length of zeroes is encoded at the end of the packet for reliable decoder termination.

The burst communications experiments have been implemented in two phases. The first phase was to operate the satellite network in a star configuration with ARC being the center node. UH/ALOHA and Alaska were to operate as remote terminals accessing the ARPANET through ARC, with the interface computer at ARC performing necessary error detection, message formatting, and network protocol, similar to the functioning of the Interface Message Processor (IMP) in the ARPANET. During this phase Alaska was not able to operate but the ALOHA terminal did access the ARPANET through the ARC ground station. The ground station at UH/ALOHA used an ALOHA Terminal Control Unit connected to the ARC Formatter/Synchronizer Unit. The terminal used was a standard Model 33 TTY. The ALOHA TCU performs the necessary packet buffering and control functions and the unit used was a standard unit from the local ALOHA ground system. The computer at ARC performed the same function as those implemented in the MENEHUNE; error checking, transmission of acknowledgments, etc. Tests were made at 20, 10, and 2 KBPS. Throughput at 20 KBPS was very poor, of variable quality at 10 KBPS, and usually good at 2 KBPS. However, even at 2 KBPS one out of four packets frequently would have errors, indicating the burst nature of the noise. Some interesting effects due to line-by-line buffering were noted. If one is accustomed to character-by-character transmission and feedback such as is employed on the ARPANET, the line-by-line mode feels quite awkward. A LOGIN precedure to a host was complicated by the delays involved in packet transfer between the ARC computer and the ARPANET. Also, significant delays were incurred by the acknowledgment procedure over the satellite link. The overall result was that

if one waited for a response from the net before entering his identification and password, he would be automatically timed out. One soon learned to provide all the necessary login information in one packet to avoid a timeout or autologout. However this problem would be quite awkward for a user not fully familiar with network protocol, who depends on some response from the network to guide him. Some efficient protocol for handling character-by-character transmission over the satellite network is indicated if remote terminals are to access the ARPANET directly over the satellite link. A compromise may be to use a data concentrator at each satellite ground station. Therefore, implementation of TIP- or IMP-type machines at satellite nodes becomes of greater interest. This leads to the second phase of the burst communications experiment, which has recently been initiated.

Phase II consists of implementing a fully connected network between ARC, UH/ALOHA, and University of Alaska. This implies not only the connection of each satellite ground station to its own computer, but also the development of efficient protocols. A special buffer interface unit was received by UH/ALOHA from ARC in July, 1973. This unit was developed to allow interfacing the ALOHA MENEHUNE to the ATS-1 ground station. The equipment setup, shown in Figure 4, shows the interface arrangement. The ATS-1 channel is multiplexed in with the ALOHA ground system channel and thus must contend with it for access to the MENEHUNE. This is a temporary arrangement and the ATS-1 channel will be provided with its own port to the MENEHUNE as soon as traffic warrants. The interface buffer isolates the ATS-1 channel from the MENEHUNE channel so that variable data rates may be employed on the satellite channel without effecting the MENEHUNE channel data rate. The buffer is designed to store and forward full packets only.

Technical problems with the buffer interface hardware and delays in implementing the necessary software in the MENEHUNE delayed operation of the satellite link through the MENEHUNE until January, 1974. Very little test time was available during January, 1974, due to priority use of the VHF transponder by NASA for its SKYLAB experiment. Full testing should get underway in February, 1974. It should be pointed out that throughout the experiment very little test time has been available on ATS-1. The test schedule has been only 120 minutes per week, consisting of 40 minutes each on Mondays, Wednesdays, and Fridays. Additional test time has recently been obtained for future testing. The University of Alaska should be operational soon as a network node, using a NOVA II computer

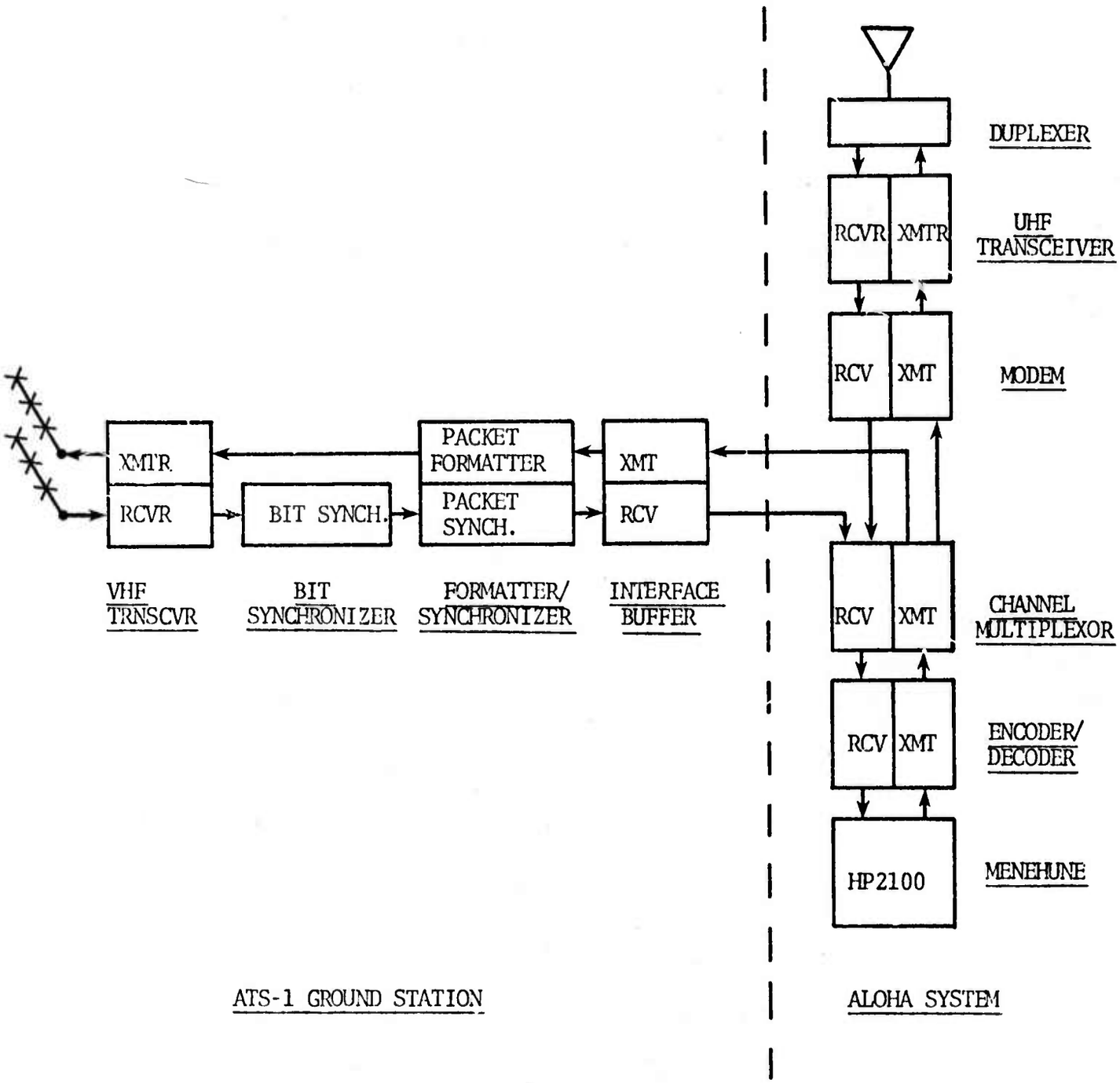

Figure 4 ATS-1 TO ALOHA INTERFACE ARRANGEMENT

as their communications processor. Since University of Alaska has its own half-hour of time allocated immediately following the 40 minute ARC/ALOHA period, this time will often be available for the experimental tests.

During Phase II, the satellite network will be developed in two increments. The first increment, presently underway, is for ARC to act as a remote terminal connected to the UH/ALOHA MENEHUNE. This is just the opposite the roles played during the initial tests, wherein an ALOHA terminal was accessing the ARC TIP over the satellite link. This arrangement will allow ARC to gain experience in accessing the time sharing system (TSO) employed on the University of Hawaii 360/65 computer, through the MENEHUNE. During this test period, software work will proceed at UH/ALOHA which will allow the MENEHUNE to receive acknowledgments from ARC or Alaska. This ACK capability in the MENEHUNE will hopefully be operational by late March, 1974. In addition, a new packet format for the ATS-1 network will be developed to allow routing of packets on a distributed network. The primary difference of this new packet format will be the employment of both destination and originator ID's. It is expected that the separate ATS-1 port on the MENEHUNE will be implemented when this new format is put into effect, in order to more effectively separate the ATS-1 network from the local ALOHA network. In fact, a separate computer is seriously being considered for use on the ATS-1 network in order to provide full isolation of the two networks. The second increment will involve putting the distributed network mode into operation. With the network operating in this mode, experiments will be directed toward the development of effective protocols through testing of new algorithms.

APPENDIX A*

ATS-1 COMPUTER COMMUNICATIONS EXPERIMENT

CONTENTS

Section		Page
1.	OBJECTIVES	A-2
2.	RATIONALE	A-2
3.	DESCRIPTION OF SYSTEM	A-5
4.	LINK POWER BUDGET	A-14
5.	EXPERIMENT DEVELOPMENT PLAN	A-15
6.	ATS PROJECT SUPPORT	A-20
7.	EXPERIMENT DATA	A-20

* Appendix A: ATS-1 Computer Communications Experiment Plan was submitted by the Spacecraft Data Systems Branch of the NASA Ames Research Center to NASA Headquarters.

ATS-1 COMPUTER COMMUNICATIONS EXPERIMENT

1. OBJECTIVES

The proposed experiment is designed to demonstrate the feasibility of utilizing satellite communication links to provide computer-computer and terminal-computer communications between remotely located sites. In order that the experiment be conducted under realistic conditions, computing facilities at the University of Hawaii (UH) and the University of Alaska (UA) will be connected to the Advanced Research Projects Agency (ARPA) computer net via an ATS-1 VHF link to the NASA-Ames Research Center (ARC). This experiment provides detailed information concerning the characteristics of the satellite link and the performance of a unique communication system under actual operating conditions. The experiment has the potential of providing, on a temporary basis, UH and UA access to the ILLIAC IV and other resources connected to the ARPA computer network, as well as providing ARPA network access to the BCC-500 computer at UH.

2. RATIONALE

Developments in mote access computing during the latter part of the 1960's h e resulted in increased emphasis on remote time-sharing, remote job entry, and networking of large information processing systems. The present generation of computer-communications systems is based on the use of leased or dial-up common carrier

facilities, primarily wire connections. These systems offer nearly optimum performance for applications requiring the transmission of digital data at relatively constant rates. Under these conditions, the use of a satellite communication link would offer a substantial advantage only if the satellite link is less expensive than the conventional common carrier facility it directly replaces. For many remote processing applications, however, data flows in bursts, interlaced by long periods of silence. These applications include the use of remote job entry stations and interactive computer consoles. Typically, these devices require private communication links, and the cost of communication may exceed the cost of computing, particularly when long distances are involved. This difficulty can be alleviated somewhat by multiplexing and data concentration if several of these devices can be placed in close proximity to each other. When this is not feasible, other techniques for increasing the efficiency of bandwidth utilization must be sought. One such technique is being investigated in the development of the ALOHA system at the University of Hawaii.

In the ALOHA system up to 500 remote terminal devices will be connected to a large time-sharing computer, the BCC-500, via two 100 kHz VHF channels. One channel is reserved for messages from the BCC-500 to the terminals; the other for messages in

the opposite direction. Messages from the BCC-500 are buffered and time multiplexed to the terminals by a HP 2115A mini-computer. Messages from the terminals to the BCC-500 cannot be multiplexed in such a direct manner, however. The use of standard orthogonal multiplexing techniques (such as frequency or time division multiplexing) results in the same inefficiencies found in conventional common carrier systems. Other techniques are more complex (expensive) and still do not solve the problem of inefficiency caused by the burst, low duty cycle nature of the messages. This situation led to the use of a random access mode of operation which requires no special central control or synchronization. It relies, instead, on a simple error detection technique and the retransmission of erroneous messages. Message errors are most likely caused by random interference between users.

Because of the similarities in data transmission requirements between the ALOHA system and the proposed experiment, and the unique solution to these requirements offered by the burst mode, random access concept of the ALOHA system, many of its features are incorporated in the experiment design. However, the scope of this experiment extends beyond the ALOHA system, not only in the use of the satellite link and the solution of unique problems involved therein, but also in the fundamental design to provide a complete computer networking capability. This is especially

important because the increased ground terminal expense for a satellite link would not be economically justifiable for the limited ALOHA application, and because of the need for a computer networking capability to such outlying areas as Hawaii and Alaska where leased broadband lines are prohibitively expensive. As satellite communication costs decrease it is possible that many wire-based communication links will be replaced by satellite links for the computer communication networks of the not-so-distant future. Because the base-band concepts of this experiment will not change, it will be directly applicable to radio frequency bands other than VHF, and, therefore, to such future applications. With current needs and such future potential in mind, the experiment is designed to be fully compatible with the ARPA network which is the largest and most successful computer network in use today.

3. DESCRIPTION OF SYSTEM

3.1 Data Organization. The initial satellite communication link will be between ARC and UH, with the UA link added later in the experiment. Final system evaluation will be for the ARC-UH-UA net. Interface between computers or terminal equipments and the link is provided by a PDP-11 mini-computer. This machine performs necessary message formatting and network protocol, similar to the functioning of the Interface Message Processor (IMP) in the ARPA net. As many satellite-peculiar functions as possible will be

performed in hardware, keeping the IMP and PDP-11 functioning nearly identical. This is done to simplify possible future replacement of the PDP-11 by an IMP. For the duration of the experiment, the PDP-11 will also monitor network status and tabulate link and user statistics.

Messages of varying length are given to the PDP-11 by users for transmission over the net. These messages are formatted into smaller packets, if necessary, before transmission, and are reassembled at the destination. Sync, routing, and message identification are added to each packet, along with a cyclic parity check code which is used by the receiver for error detection. A transmitted data packet is ignored by all receivers except the one for which it is addressed, and is acknowledged if, and only if, it was received without error. A message is retransmitted if the expected acknowledgement is not received within a given interval of time. (The interval is different for each terminal to prevent repeated interferences.) Because of the low downlink signal strength and variability of the channel characteristics, an error correction code will be added prior to transmission. The presence of this code will not be apparent in the other portions of the system.

3.2 System Hardware. A simplified block diagram of the system hardware organization is given in figure 3.2. A more complete description is given below.

3.2.1 PDP-11. The function of the PDP-11 is described in section 3.1. This 8k, 16-bit mini-computer will operate unattended. For initial phases of testing, the PDP-11 will be replaced by a small test set which interfaces directly to the transmitter (or encoder) and generates pre-programmed messages continuously or at specified intervals. An error counting capability is also provided with the test set.

3.2.2 Transmit Interface Hardware. A small interface device is required to provide parallel-to-serial conversion from the PDP-11 for transmission. This hardware also generates the cyclic parity check bits and appends them to the end of the packet.

3.2.3 Convolutional Encoder. In order to maintain the minimum required data rate of 5 kbps without excessive retransmissions due to channel errors, error correction coding is necessary. The short constraint length convolutional code tentatively selected (K=4) is capable of about 4.5 dB gain with maximum

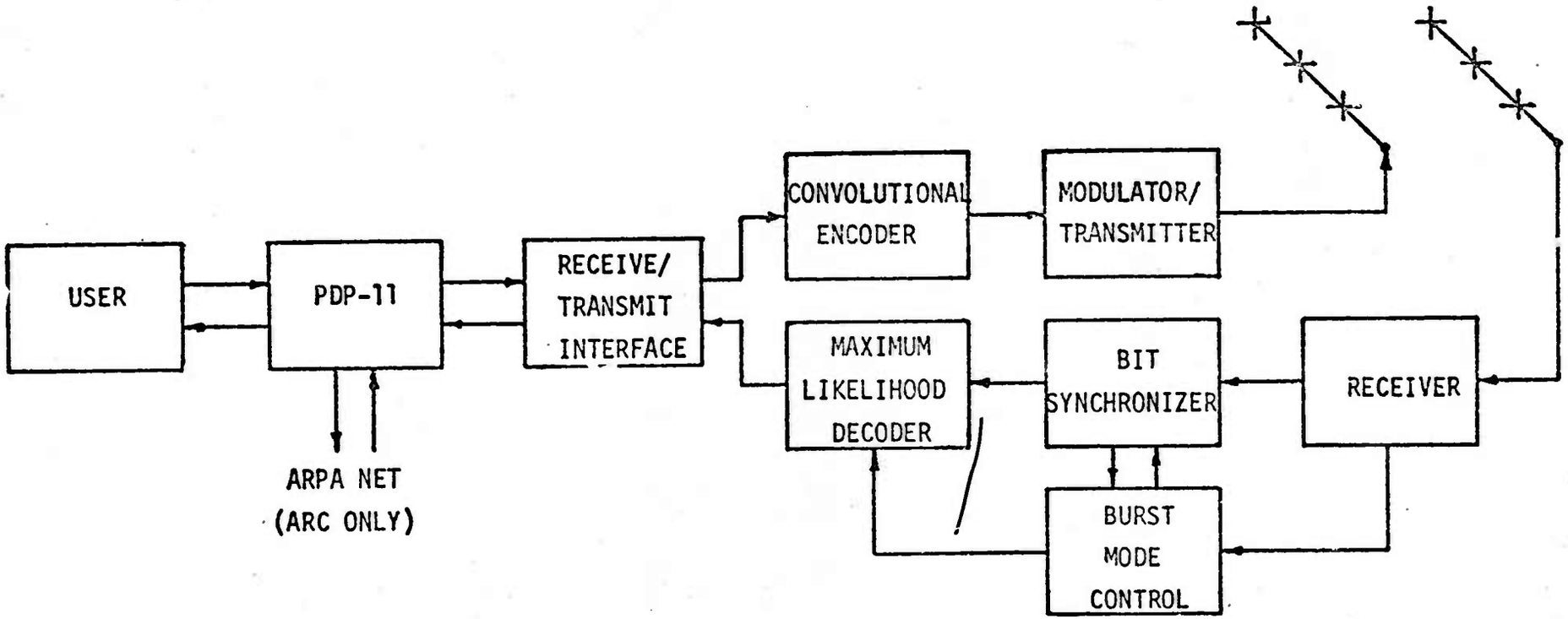

FIGURE 3.1. EXPERIMENT GROUND TERMINAL

likelihood decoding at an output bit error rate of 1×10^{-7}, for errors caused by system noise and anticipated auroral interference. Random decoder errors and errors caused by message interference and VHF burst interference are of the type that the cyclic parity check code was designed to detect. It is expected that the system undetected error rate will be compatible with the 1×10^{-12} value specified for the ARPA net.

A bit synchronizer preamble and decoder sync bits are added to the beginning of an encoded data packet, and a constraint length of zeroes is encoded at the end for reliable decoder termination.

3.2.4 Modulator/Transmitter. To minimize receiver lock-up time, which is necessary for the burst mode of operation, while keeping the RF receiver simple, PCM/FM modulation and discriminator detection will be employed. Discriminator detection causes only 1 dB degradation from optimum PCM/FM, provided the deviation ratio and the receiver IF bandwidth is optimized for the bit rate used. The transmitter section from a General Electric Company commercial-grade transceiver operating with an output power of 330 watts on a carrier frequency of 149.2 MHz will be used. A simple modification to convert the transmitter to frequency modulation is necessary; this has been designed and tested.

3.2.5 Transmitting Antenna. A four-bay crossed dipole array which provides circular polarization and 17.0 dB gain will be used for transmission. Although the satellite antenna is linearly polarized, circular polarization of both ground transmitting and receiving antennas with the attendent 3 dB polarization loss is necessary because of the varying Faraday rotation of the signal. Manual antenna pointing is facilitated by rotators in both the azimuth and elevation axes.

3.2.6 Satellite Channel. The ATS-1 geosynchronous satellite, which provides both C-band and VHF transponders, was selected for this experiment because of its easy access from Hawaii, Alaska, and California. Although the 5-10 kbps data rates supported by the VHF link are only marginal for the proposed experiment, VHF was selected because the RF portion of a ground terminal is minimal in cost for VHF when compared to C-band; also, VHF terminal equipment already is available in Alaska.

Several characteristics of the satellite and VHF frequency band require special consideration in the system design. The ATS-1 transmitter is usually operated in the so-called half-power mode, which is actually 6 dB below full power, or currently, 41.8 dBm. To minimize restrictions on satellite

use, the link is designed for this mode of operation. Additional attenuation is caused by spin modulation of the VHF antenna array. For the half-power mode, this amounts to about 4.5 dB per satellite revolution, at the ARC location. The galactic noise temperature at VHF varies, depending on the ground antenna pointing angle relative to the center of our galaxy; this is a function of the time of day and year. Although variable bit rates could be used to compensate for this variation, non-optimum receiver bandwidth utilization would result. In addition, all terminals would have to operate at the bit rate of the poorest link. Therefore, a fixed bit rate and worst case sky temperature have been used in the system design. Finally, propagation anomalies and local interference may produce fading and burst error properties in the channel, and particular attention must be given to auroral interference in the Alaska link. One of the experiment objectives will be to determine how effectively system design can compensate for these anomalies.

It is planned initially to use only a single channel in a half-duplex mode of operation. This is necessitated by the non-linear power compression characteristics of the ATS-1 transponder. Compensation to provide full duplex operation would require tedious adjustment of ground transmitter power levels because of the low power margin available. For the

single channel mode, each user risks interference by other users which requires subsequent retransmission. The possibility of protecting the high-use ARC transmit link by using a separate frequency channel and increased power will be investigated. For this mode, the channel will still be essentially half-duplex since an outlying transmission occurring simultaneously with an ARC transmission will be compressed below the system threshold.

3.2.7 Receiving Antenna. A 4-bay crossed dipole ar identical to the transmitting antenna will be used for re iving.

3.2.8 Receiver/Demodulator. The narrow band receiver from the GE transceiver will be used for the experiment. Since this unit was designed for voice operation, a number of modifications have been made to provide for optimum operation at 10 kilo-symbols-per-second. However, tests indicate performance equivalent to much more expensive receivers can be obtained.

3.2.9 Bit Synchronizer. An EMR model 720 bit synchronizer is proposed for use by the experiment. This unit provides the "integrate-and-dump" voltage output required for decoding and the very fast acquisition time necessary for efficient burst mode operation. Bit sync acquisition will be aided by the use of a local

oscillator whose signal amplitude and frequency are set to the approximate received signal level and symbol rate. Bit sync stability will be maintained by gating this signal with the receiver output according to a pre-set receiver AGC level, thus reducing bit sync acquisition time.

3.2.10 Decoder. Maximum likelihood decoding of the K=4 convolutional code is relatively simple and straightforward for the low data rates involved. This application requires the addition of a phase and sync resolution circuit for the burst mode of operation.

3.2.11 Receive Interface Hardware. PDP-11 receive interface hardware consists of a serial-to-parallel buffer and parity check logic. Parity violation will be signalled by a program interrupt.

3.2.12 SEL 840A Computer. The ARC Systems Engineering Division SEL 840A computer will be used throughout the initial phases of testing to perform detailed monitoring of link characteristics. Real-time error tabulation and data recording will be provided in addition to extensive off-line statistical analysis of link characteristics. In the final system configuration, the 840A will be connected to the ARC PDP-11 as a user computer.

4. LINK POWER BUDGET

The downlink power budget is presented in table 4.1. Under worst case conditions, the input bit error rate at the decoder is 1.4×10^{-3}. The uplink effective radiated power of 66 dBm is 4 dB above the level required to saturate the satellite receiver.

1.	Average satellite transmitter EIRP (1)		41.8 dBm
2.	Spin modulation loss for minimum signal		2.2 dB
3.	Space Loss (f = 135.6 MHz, R = 38,000 km)		166.7 dB
4.	Receiving antenna gain		17.0 dB
5.	Polarization loss		3.0 dB
6.	Receiving circuit loss		1.0 dB
7.	Total received power, S		-114.1 dBm
8.	Receiver noise spectral density, N_o (T = 1500°K)	(2)	-166.8 dBm-Hz
9.	Bit rate (1/T) (10k symbols/sec)	(3)	40.0 dB
10.	ST/N_o; $P_e = 1.4 \times 10^{-3}$	(4)	12.7 dB

NOTES:
(1) Regulator #1 only
(2) 500°K Preamp temp.
500-1000°C Sky temp.
(3) Rate 1/2 convolutional code;
data rate = 5 kbps
(4) PCM/FM experimental data
error rate output of decoder $< 10^{-7}$

Table 4.1. Power Budget for Satellite to Terminal

5. EXPERIMENT DEVELOPMENT PLAN.

The experiment objectives will be met by performing a number of major subtasks which are identified below. Figure 5 lists these tasks in detail with milestones and time schedule, assuming experiment approval and satellite test time are granted as requested.

5.1 Establish simplex (ARC-ATS-ARC) link at ARC: Develop test set hardware, test and select equipment, determine satellite link characteristics, optimize system parameters.

5.2 Establish half-duplex link between ARC and UH: Provide test set, transmitter, antennas, receiver, and bit synchronizer for loan to UH. Determine characteristics of link and effect of simultaneous transmissions.

5.3 Upgrade RF terminal for burst mode operation: Determine transmitter, satellite, receiver, and bit synchronizer characteristics in burst mode and the subsequent requirements for data formatting and decoder sync recognition. Design and fabricate burst mode control logic for transmitter, receiver, and bit synchronizer.

5.4 Add error correction coding to link: Design and fabricate hardware for coding. Evaluate its performance over the

		1972												1973											
		J	F	M	A	M	J	J	A	S	O	N	D	J	F	M	A	M	J	J	A	S	O	N	D
1.	ESTABLISH SIMPLEX LINK AT ARC																								
1.1	design, fabricate, and check out ARC test set	—	—																						
1.2	modify and test GE transmitter	—																							
1.3	modify and test GE wide-band and narrow-band receivers	—	—																						
1.4	fabricate and check out antenna systems	—	—																						
1.5	procure and test bit synchronizer			—																					
1.6	prepare SEL 840A test software and interface to bit sync	—	—	—																					
1.7	perform hard-line systems tests (mod. index, bandwidth, & bit rate for PCM-FM links)	—	—	—																					
1.8	perform ATS-1 link tests (characterize link; spin modulation, fading, interference)	—	—	—																					
2.	ESTABLISH HALF-DUPLEX LINK BETWEEN ARC & UH																								
2.1	modify transceiver for UH terminal		—	—X					(X DENOTES SHIPPING DATE)																
2.2	fabricate test set for UH		—	—X																					
2.3	construct and test antennas for UH		—	—X																					
2.4	ship bit synchronizer			X																					
2.5	assemble and check out UH RF ground terminal in Hawaii			—	—																				
2.6	establish ARC-UH link and perform half-duplex tests				—	—																			
3.	UPGRADE RF TERMINAL FOR BURST MODE OPERATION																								
3.1	determine burst mode response for transmitter, receiver, and bit sync		—	—																					
3.2	design, fabricate, and test burst mode control logic			—																					
3.3	design data format for burst mode operation			—																					

FIGURE 5. EXPERIMENT DEVELOPMENT PLAN

sheet 1 of 3

		1972												1973											
		J	F	M	A	M	J	J	A	S	O	N	D	J	F	M	A	M	J	J	A	S	O	N	D
3.4	upgrade ARC test set for burst mode format & test thru ATS-1 at ARC				—																				
3.5	fabricate burst mode hardware for UH				—X																				
3.6	perform burst mode tests between ARC & UH					—																			
4.	ADD ERROR CORRECTION CODING TO LINK																								
4.1	evaluate perf. of conv. code with max. likelihood decoding		—	—																					
4.2	design, fabricate, and test encoder and decoder for continuous mode			—	—	—	—																		
4.3	design, fabricate, & test decoder sync acquisition for burst mode						—																		
4.4	fabricate burst mode encoder/decoder for UH						—X																		
4.5	perform coded burst mode tests at ARC and between ARC and UH								—																
5.	INTEGRATE ARC PDP-11 INTO SYSTEM																								
5.1	software design for PDP-11 (functions, protocols, interfaces)		—	—																					
5.2	prepare interim software for bit transfer and validation tests				—																				
5.3	design, fabricate and test receive/transmit interface hardware				—																				
5.4	prepare final satellite/user/ARPA interface software for PDP-11					—	—	—	—	—															
5.5	perform PDP-11/link subsystem tests at ARC and with UH					—	—	—	—	—															
5.6	design and prepare user/PDP-11 interface software for 840A								—	—															
5.7	design, fabricate, and test user (840A)/PDP-11 interface hardware								—																
5.8	test compatibility of 840A/PDP-11/satellite/ARPA software/hardware system										—														
6.	INTEGRATE UH INTO NET																								
6.1	ship PDP-11 to UH					X																			

FIGURE 5. EXPERIMENT DEVELOPMENT PLAN

sheet 2 of 3

		1972												1973											
		J	F	M	A	M	J	J	A	S	O	N	D	J	F	M	A	M	J	J	A	S	O	N	D
6.2	modify existing PDP-11 software package for UH use			—																					
6.3	fabricate receive/transmit interface hardware for UH			—X																					
6.4	design, fabricate, and test user interface hardware for UH									—															
6.5	prepare user/PDP-11 interface software									—	—														
6.6	validate end-to-end compatibility between UH users and ARC											—													
6.7	connect UH to ARPA net & evaluate performance with UH only on link												—	—	—	—									
7.	INTEGRATE UA INTO NET																								
7.1	fabricate test set for UA		—X																						
7.2	ship bit sync to UA			X																					
7.3	evaluate ARC/UA link		—	—	—	—	—																		
7.4	fab. coding hardware, burst mode control, receive/transmit interface hardware for UA						—	—	X																
7.5	design, fabricate, and test user interface hardware for UA									—															
7.6	provide PDP-11 and software (identical to UH) to UA								X																
7.7	prepare user/PDP-11 interface software									—	—														
7.8	validate end-to-end compatibility of all systems between UH users and ARC									—	—	—													
7.9	connect UA to ARPA net & evaluate performance with UA only on link												—	—	—	—									
8.	PERFORM MULTIPLE USER SYSTEM TEST & EVAL. Conduct controlled tests with two users connected into ARPA net to determine system perf., max. thru-put, effects of interferences, effects of propagation & system delays, improvements in protocols, improvements in hardware and system design.		BEGIN	APRIL	1973	AND				CONTI	NUE			THRU	JUNE		1974								

FIGURE 5. EXPERIMENT DEVELOPMENT PLAN

sheet 3 of 3

satellite link in continuous mode. Upgrade to burst mode with necessary formatting of data and decoder sync recognition logic.

5.5 Integrate PDP-11 into system: Detail PDP-11 functional design. Design and fabricate receive and transmit interface hardware. Develop software and integrate into satellite link, 840A, and ARPA net at ARC.

5.6 Integrate UH into net: Provide PDP-11 and interfaces for UH. Develop user software. Perform end-to-end tests. Tie into ARPA net and test operation.

5.7 Integrate UA into net: Characterize UA link. Provide PDP-11 and interfaces for UA. Develop user software. Perform end-to-end tests. Tie into ARPA net and test operation.

5.8 Perform multiple user system test and evaluation. Conduct controlled tests with UH and UA connected into ARPA net. Determine system performance, maximum thru-put, effects of interferences, effects of propagation and system delays, improvements in protocols, improvements in hardware and system design.

6. ATS PROJECT SUPPORT.

6.1 Satellite Time. Subtasks identified in section 5 requiring ATS-1 satellite test time are shown in figure 6.1. A composite of the time required is given below:

3 Jan 72 - 2 Apr 72	3 days/week, 40 min/day
3 Apr 72 - 29 Oct 72	3 days/week, 60 min/day
30 Oct 72 - 9 Dec 72	5 days/week, 60 min/day
10 Dec 72 - 8 Apr 73	5 days/week, 120 min/day
9 Apr 73 - 30 Jun 74	4 days/week, 120 min/day

6.2 Ground Station Support. No special ground support from the ATS Project is anticipated other than configuring the satellite to meet test requirements, monitoring the tests on a daily basis, and distributing satellite ephemeris data.

7. EXPERIMENT DATA.

The experiment will provide data concerning:

a) Suitability of satellite links for multiple user, random access, computer-computer communications.

b) Effectiveness of experimental system design to meet specific user requirements.

		1972												1973											
		J	F	M	A	M	J	J	A	S	O	N	D	J	F	M	A	M	J	J	A	S	O	N	D
	NUMBERS BELOW CORRELATE WITH SUBTASKS LISTED IN FIGURE 5:																								
1.8	Perform simplex tests at ARC																								
2.6	Perform half-duplex tests between ARC & UH																								
3.4	Perform burst mode tests at ARC																								
3.6	Perform burst mode tests between ARC & UH																								
4.1	Evaluate convolutional code performance																								
4.2	Test hardware decoder in continuous mode																								
4.5	Perform coded burst mode tests																								
5.5	Check out software via subsystem tests with UH & ARC																								
5.8	Perform compatibility tests with ARPA at ARC																								
6.6	Validate UH compatibility with ARC terminal																								
6.7	Test UH connection into ARPA net																								
7.3	Perform link tests with UA																								
7.8	Validate UA compatibility																								
7.9	Test UA connection into ARPA net																								
8.	Perform system test and evaluation		APRIL 1973 THRU JUNE 1974																						
	COMPOSITE OF TIME REQUIRED				3 days/week 60 min/day								5 days/week 120 min/day				4 days/week 120 min/day								
		3 days/week 40 min/day									5 days/week 60 min/day														

FIGURE 6.1. SUBTASKS REQUIRING ATS-1 TEST TIME

c) Problems of system implementation with optimal and alternative solutions.

d) Design of a more generalized system with application to other satellite frequency bands.

e) Detailed satellite link characteristics, including the effects of fading and auroral interference on error rate.

f) Performance of the first quantized maximum likelihood decoder over a satellite link.

g) Gains in link data rate by the utilization of efficient modulation and error correction coding techniques.