UNCLASSIFIED

AD NUMBER
ADA954579
CLASSIFICATION CHANGES
TO: **UNCLASSIFIED**
FROM: **CONFIDENTIAL**
LIMITATION CHANGES
TO: **Approved for public release; distribution is unlimited. Document partially illegible.**
FROM: **Distribution authorized to U.S. Gov't. agencies and their contractors; Administrative/Operational Use; 01 SEP 1950. Other requests shall be referred to Army Chief of Ordnance, Washington, DC 20310. Document partially illegible.**
AUTHORITY
14 dec 1984 per document marking; 14 dec 1984 per document marking

THIS PAGE IS UNCLASSIFIED

UNCLASSIFIED

AD NUMBER
ADA954579
CLASSIFICATION CHANGES
TO: **CONFIDENTIAL**
FROM: **RESTRICTED**
AUTHORITY
EO 10501, 5 Nov 1953

THIS PAGE IS UNCLASSIFIED

REPRODUCED AT GOVERNMENT EXPENSE

AD-A954 579

UNCLASSIFIED

Interim Technical Report

"A RESEARCH INVESTIGATION OF POSSIBILITIES FOR OBTAINING HOT-HARD ELECTRODEPOSITED CHROMIUM OR CHROMIUM-BASE ALLOYS FOR CANNON"

O.O. Project Number: TR3-30033

A.A.L. File Number: 691.1/25-23

Contract: DA-33-019-ORD-9

Classification: ~~Restricted~~

September 1, 1950

G-1430

BATTELLE
MEMORIAL INSTITUTE
505 King Avenue
COLUMBUS 1, OHIO

CONFIDENTIAL

DTIC FILE COPY

DTIC
DEC 1 4 1984
A

This document has been approved for public release and sale; its distribution is unlimited.

DISCLAIMER NOTICE

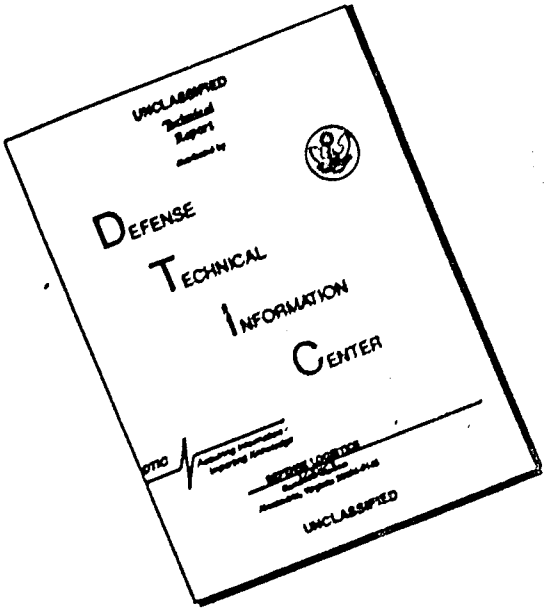

THIS DOCUMENT IS BEST QUALITY AVAILABLE. THE COPY FURNISHED TO DTIC CONTAINED A SIGNIFICANT NUMBER OF PAGES WHICH DO NOT REPRODUCE LEGIBLY.

UNCLASSIFIED CONFIDENTIAL

DTIC ELECTE DEC 1 4 1984 S A

INTERIM TECHNICAL REPORT

Contractor: Battelle Memorial Institute

Agency: Office, Chief of Ordnance, ORDTR - Cannon

Ordnance District: Cleveland, Ohio

Contract Number: DA-33-019-ORD-9 W. A. L. File No. 691.1/25-23

O.O. Project Number: TR3-3003B

Priority: War Department 2B

Title of Project: "A Research Investigation of Possibilities for Obtaining Hot-Hard Electrodeposited Chromium or Chromium-Base Alloys for Cannon."

Authors: J. Edwin Bride, Cloyd A. Snavely, and Charles L. Faust

Object: To investigate possibilities for an erosion-resistant chromium or chromium-alloy electroplate for lining gun tubes.

Summary: The 94 per cent chromium - 6 per cent iron alloy plate 0.003 inch thick has been successfully applied to the bore surface of 12-inch sections of 40-mm. gun tubes. Though adhesion was generally good, as indicated by resistance to peeling upon sawing, there was some indication, by metallographic examination, of need for further improvement. Attaining good adhesion is no problem when plating flat panels. So, the

Cont'd UNCLASSIFIED CONFIDENTIAL

Cont'd

internal moving-anode system will be studied further. The process for alloy plating the bore surface has been simplified by modification, eliminating the porous diaphragm that was previously needed.

CONFIDENTIAL

Conclusions

Changes now being studied in the anode system are expected to be successful for showing the technique to be used in applying the 94 chromium - 6 iron alloy plate to full-length 40-mm. gun tubes. As soon as the method is ready, full-length 40-mm. tubes will be plated elsewhere and used in firing tests.

Since plating can now be done without a diaphragm, prospects are much better for applying the 94 chromium - 6 iron alloy plate to the caliber-.60 erosion-gage weapon. Tests with it could give preliminary evaluation of the new alloy plate.

Report Period

This report covers the period from February 10, 1950, to September 1, 1950.

Avail and/or
Special
UNANNOUNCED

CONFIDENTIAL

CONFIDENTIAL
RESTRICTED

DISTRIBUTION

No. of Copies	Sent To
2	Chief of Ordnance Attn: ORDTR-Cannon Washington 25, D. C.
1	Ditto Attn: ORDTX-AR
1	" Attn: ORDTS-Machine
1	" Attn: ORDTR-Materials
1	" Attn: ORDTM-Ammunition
1	" Attn: ORDTU-Rockets
1	District Chief, Los Angeles Ordnance District, 35 North Raymond Avenue, Pasadena 1, California, Attn: Rockets
1	Commanding Officer Watervliet Arsenal Watervliet, New York
1	Commanding General Frankford Arsenal Philadelphia 37, Pa.
1	Commanding Officer Springfield Armory Springfield 1, Mass.
1	Commanding Officer Picatinny Arsenal Dover, New Jersey
1	Commanding Officer Rock Island Arsenal Rock Island, Illinois

CONFIDENTIAL
RESTRICTED

DISTRIBUTION (Continued)

CONFIDENTIAL

No. of Copies	Sent To
1	Chief, Bureau of Ordnance Navy Department Washington, D. C. Attn: Re5a
1	Commanding Officer Office of Naval Research Bellevue Washington 25, D. C.
1	Commandant Naval Gun Factory Washington, D. C. Attn: Plating Shop
1	Commanding Officer Wright Field Dayton, Ohio Attn: Materials Lab.
1	National Bureau of Standards Washington, D. C. Attn: Electrochemical Section
1	Rensselaer Polytechnic Institute Department of Metallurgy Troy, New York
2	District Chief Cleveland Ordnance District Cuyahoga Abstract Building 717 Superior Avenue, N. E. Cleveland 14, Ohio
4	Commanding Officer Watertown Arsenal Watertown 72, Massachusetts
25 TOTAL	

CONFIDENTIAL

CONFIDENTIAL RESTRICTED

TABLE OF CONTENTS

	Page
INTRODUCTION	5
EXPERIMENTAL WORK	7
Method of Attack	7
Apparatus	7
SUMMARY OF ESSENTIAL EXPERIMENTAL OBSERVATIONS	9
Specimens 4662-69A to 4662-75A (Table 1)	9
Pilot-Cell Tests 4662-80A to 4662-87A (Table 1)	9
Pilot-Cell Tests 4662-95A to 5389-1B (Table 2)	11
Pilot-Cell Tests 5389-2A to 5389-17A (Table 2)	12
Pilot-Cell Tests 5389-17A to -24A (Table 2)	13
Pilot-Cell Tests 5389-30A to -38A (Table 3)	14
Pilot-Cell Tests 5389-39A to -42A (Table 3)	14
Pilot-Cell Tests 5389-50A to -50B (Table 3)	15
Specimen and Short-Tube Tests 5389-51A to -52D (Table 3)	15
Pilot-Cell Tests 5389-52E to 5389-52G (Table 3)	16
SUMMARY OF THE BEST PLATING PROCEDURE TO DATE	17
Electrolyte Flow	18
Cathode Current Density	18
pH (at 145°F.)	18
Temperature of Bath	18

CONFIDENTIAL RESTRICTED

CONFIDENTIAL

TABLE OF CONTENTS (Continued)

Page

Anode Construction 18

Reduction of Hexavalent Chromium in Bath 18

Rate of Deposition 18

Adherence of Alloy Deposit 19

CONFIDENTIAL

RESTRICTED

INTERIM TECHNICAL REPORT

on

CONFIDENTIAL

A RESEARCH INVESTIGATION OF POSSIBILITIES FOR OBTAINING HOT-HARD ELECTRODEPOSITED CHROMIUM OR CHROMIUM-BASE ALLOYS FOR CANNON

by

J. Edwin Bride, Cloyd A. Snavely, and Charles L. Faust

September 1, 1950

INTRODUCTION

The development of a process for plating chromium-iron alloy was carried out in a previous Army Ordnance contract*. A 94 per cent chromium - 6 per cent iron alloy plate exhibited hot hardness considerably superior to conventional chromium plate. In addition, the rate of deposition and current efficiency for chromium-iron alloy plating were superior. Limited tests were made on the application of the plate to the bore surfaces of tubes. However, the major portion of the work related to the development of the plating process.

The present effort relates mainly to developing the special technique required to plate the chromium-iron alloy on the bore surfaces of long tubes. The 40-mm. cannon has been selected for firing tests to

* Contract W33-019-ORD-6397. Results are reported in the "Final Technical Report on A Research Investigation of Possibilities for Obtaining Hot-Hard Electrodeposited Chromium or Chromium-Base Alloys for Cannon", Battelle Memorial Institute, November 15, 1949.

CONFIDENTIAL

CONFIDENTIAL

compare the alloy plate with conventional chromium plate [illegible] guns. At the present time, the current-density requirements for the alloy-plating process are too great to allow plating of an entire gun tube at one time. Therefore, a moving anode must be used, similar to the practice with conventional chromium plating. The main difficulty in applying the alloy plate inside tubes with a moving anode has appeared as peeled or poorly adherent plate at regions receiving the plate in the latter stages of the plating run.

CONFIDENTIAL

EXPERIMENTAL WORK*

Method of Attack

CONFIDENTIAL

A pilot-scale plating unit was constructed for plating the bore surfaces of tubes up to 18 inches long. This unit was used to test the plating process with a moving anode. Insoluble anodes were used with diaphragms, and soluble anodes were used without diaphragms. Continued difficulty with these anode systems led to development of an improved plating method, employing an insoluble moving anode without a diaphragm. This method appears very promising at the present time, though experience with it has been insufficient to allow definite conclusions.

Apparatus

The pilot-scale plating unit is shown in the photograph of Figure 1 and the schematic drawing of Figure 2. Most of the work with the unit has been on 1-1/2-inch-bore steel tubing. The tubing is prepared for plating in separate electropolishing, electrocleaning, and acid-dipping facilities, then placed in the plating unit for plating.

The apparatus illustrated in Figure 2 is for a diaphragm-type anode arrangement wherein both catholyte and anolyte are continuously

---

* Experimental data obtained in this work are recorded in Laboratory Record Books Nos. 4662, pages 67-100; and 5389, pages 1-53.

CONFIDENTIAL

CONFIDENTIAL

circulated. The anode assembly is moved downward throu[illegible] plated during the plating operation. Catholyte flows by gravity from the 16-liter catholyte reservoir into the bottom of the tube. The catholyte level inside the tube is lowered with the anode so that the finished plate is not exposed to solvent action of the catholyte. Suction tubes attached at the top of the anode assembly and passing through a sigmamotor pump return the catholyte to the reservoir.

The anolyte flow through the anode assembly is maintained by a sigmamotor pump which pumps anolyte out of the assembly. This produces a negative pressure inside the diaphragm. Thus, there is a tendency for catholyte to seep through the diaphragm into the anolyte, but no anolyte flows into the catholyte. When no diaphragm is used, the anolyte circulating system is simply disconnected.

The speed of lowering the anode assembly is adjusted by interchangeable pinions of various sizes in the lowering mechanism. The actual lowering is done by a motor-driven rack-and-pinion arrangement.

Figure 3 is an illustration of a diaphragm-type anode assembly. Figure 4 shows various types of anode arrangements used during the work. The arrangement on the left has a hollow lead anode inside a ceramic-tube diaphragm. This anode was water cooled. Second from the left shows a hollow magnesium anode, cut away to show the water cooling chamber. The center anode is the type detailed in Figure 3. Fourth from the left is

CONFIDENTIAL

CONFIDENTIAL
RESTRICTED

a solid lead anode with braided-wire current le[illegible] Lucite spiders at the top and bottom served to center the anode in the tube being plated. At the right is shown the most successful anode assembly used thus far. The anode itself is a two-inch length of lead rod. The four rubber tubes serve to remove electrolyte which flows up to the top of the anode. The Lucite cylinder serves as a centering guide.

SUMMARY OF ESSENTIAL EXPERIMENTAL OBSERVATIONS

The essential experimental data are recorded in Tables 1 to 3. The following discussion summarizes the pertinent aspects of groups of individual plating experiments.

Specimens 4662-69A to 4662-75A (Table 1)

These tests were performed in a 1-liter glass cell, using a 99 per cent lead - 1 per cent silver anode with a porous diaphragm. The specimens were prepared primarily for metallographic study of deposits made from the "high throwing power bath".* The tests showed that, to obtain a sound deposit, the temperature of the bath must be about 120°F. and the pH must be in the range from 1.8 to 2.0.

Pilot-Cell Tests 4662-80A to 4662-87A (Table 1)

These experiments were performed to study the effect of the variables that would be encountered in plating a steel tube of approxi-

* The "high throwing power bath" was described in the November 15, 1949, report, page 18.

CONFIDENTIAL

RESTRICTED
CONFIDENTIAL

mately the same diameter as a 40-mm. gun tube [illegible] at the left in Figure 4. The 99 per cent lead - 1 per cent silver alloy was cast around a brass tube, the center of which was cooled with circulating tap water. A porous diaphragm was positioned around the anode to keep the anolyte from contaminating the catholyte. A small tube inserted in the space between the outside of the anode and inside of the diaphragm was attached to an aspirator. The purpose of this was to continuously draw off a small quantity of anolyte, thereby creating a negative pressure inside the diaphragm. The small amount of catholyte seeping through the diaphragm was the only assurance at this time that hexavalent chromium ion was not passing out through the diaphragm. This anode assembly was bulky and difficult to keep in repair. However, a considerable number of tests were carried out which gave valuable information relating to the type of pump to use, amount of heat transfer to be considered when operating at high current densities, rate of anode travel, and pH control. Poor adhesion of the chromium-iron alloy deposit to the tube bore surface, whether it be brass, steel, or electropolished steel, was encountered in the first series of tests with this anode. Many changes were subsequently made in anode design, cathode flow, pH control, rate of anode travel, and other plating conditions in an effort to find a solution to the adherence problem.

A magnesium anode assembly (shown in Figure 4), made of Dow Pure Star magnesium bar stock of 1-inch diameter with a 1/2-inch hole drilled

CONFIDENTIAL

CONFIDENTIAL RESTRICTED

in the center for circulation of cooling water was used as a soluble anode and did not require a diaphragm. Several fairly good deposits were made in 1-1/2-inch-diameter steel tubes 6 inches long, but the chemical action of the bath on the magnesium was excessive. This caused an increased concentration of magnesium ammonium sulfate in the bath which precipitated as a thin film on the inside surface of the tube. For these two reasons, mainly, the use of magnesium anodes was discontinued.

Pilot-Cell Tests 4662-95A to 5389-1B (Table 2)

These experiments were performed with a 4-inch-long lead-tube anode enclosed by a porous diaphragm, as shown in Figure 4 and also in cross section in Figure 3. Anolyte was circulated in a closed system and cooled as required. By installing a sigmamotor pump on the outlet tube of the anode assembly, a negative pressure of from 1 to 3 inches of mercury could be maintained inside the diaphragm. This was necessary mainly for preventing hexavalent ion and oxygen, the anode products, from seeping through the diaphragm and contaminating the catholyte. Uniformly good adhesion of the alloy deposit still was not obtained with this improved anode. However, plating variables could now be controlled within close enough limits that a 12-inch section of 40-mm. gun tube was selected for several tests. The composition of the 16-liter pilot-cell bath at the start of Test 4662-95A corresponded to the "high throwing power bath".

RESTRICTED
CONFIDENTIAL

RESTRICTED

Just prior to Test 4662-99A, the bath composition was adjusted, as shown in Table 1, to a chromium ammonium sulfate content of 500 g./l. Subsequent tests gave no improvement in plate adherence.

CONFIDENTIAL

Pilot-Cell Tests 5389-2A to 5389-17A (Table 2)

At the start of this series of tests, the concentration of the pilot-cell bath was adjusted to the "Standard Formulation Bath"* composition plus 50 g./l. ammonium sulfate to help increase throwing power. The 12-inch section of 40-mm. gun tube was stripped and plated several times, but, in all cases, the deposit was not suitably adherent to the electropolished steel bore surface. At this time, it appeared that the catholyte was attacking the bore surface and perhaps leaving a smutty residue that interfered with good adhesion. In an effort to prevent the formation of smut, 3.0 g./l. of an organic pickling inhibitor was added to the plating solution after beaker tests showed that some protection could be expected from such an addition. Pilot-cell tests showed that a small amount of the organic inhibitor migrated to the cathode, forming a film there which caused very poor adhesion of the alloy deposit. An activated-charcoal treatment at 170°F. was used to remove the organic inhibitor from the plating solution. At the same time, ammonium persulfate was added to facilitate removal of reduced sulfur compounds in the bath by filtration.

---

* As described in the report dated November 15, 1949.

RESTRICTED

CONFIDENTIAL

CONFIDENTIAL

Test 5389-13A, which followed the bath treatment, was the first tube to be plated in which the alloy deposit was firmly adherent for the full length of the bore surface. This test showed that success is possible if all conditions are properly adjusted. The 12-inch section of 40-mm. gun tube used in previous tests was plated again, and this time (5389-14C) the lower half of the bore surface received a deposit with good appearance and excellent adherence. The improvement in adherence at this time could not be traced directly to any one factor, but it was suspected that the ammonium persulfate might have influenced the chemical action on the steel bore surface as the catholyte flowed up through it.

Test 5389-16A, using an 18-inch-length tube, yielded a poorly adherent plate at the top of the tube where the catholyte flow rate was known to have been slow. A higher rate of catholyte flow during the remainder of the test gave a very good appearing deposit with excellent adhesion.

Pilot-Cell Tests 5389-17A to -24A (Table 2)

In this series of tests, a running log of the rate of catholyte flow and negative pressure in the anode system indicated that poor adhesion could result from a catholyte flow below 500 ml./min. It was also shown that a break in the negative pressure on the anode assembly

CONFIDENTIAL

RESTRICTED

could seriously affect plating conditions and result in poor adherence. A new pump was designed and built to allow a wider range of catholyte flow under controllable conditions. The pump was designed at Battelle. However, its principle of operation is similar to that of a pump described in a recent publication*.

CONFIDENTIAL

Pilot-Cell Tests 5389-30A to -38A (Table 3)

This series of tests showed that increased catholyte flow gave slightly better deposits but did not overcome the poor adhesion problem. It was noted in Tests 4389-17A to -24A that the anode negative pressure decreased as the anode was lowered into the tube being plated. To control this variable, several plating tests were carried out (5389-34A to -38A) in which the anode was held stationary and the tube was moved slowly upward during the plating operation. A good appearing, adherent deposit was produced this way, but not until additional ammonium persulfate had been added to the pilot-cell bath.

Pilot-Cell Tests 5389-39A to -42A (Table 3)

These tests were performed with a 3/4-inch-diameter lead-tube anode 7 inches long without the usual porous diaphragm, as shown in Figure 4, extreme right. The hexavalent chromium formed as an anode product in the

---

* Glenn, E. E., Jr., and Hackerman, Norman, "Positive Displacement Pump for Corrosive Fluids", Rev. Sci. Inst., 21, 148 (1950).

RESTRICTED

CONFIDENTIAL

pilot-cell bath was indirectly reduced with 30 per cent hydrogen peroxide. The initial deposit, full length of the anode, was good in most cases, but, as soon as the anode moved down farther into the tube, the deposit blistered and peeled from the tube surface. An addition of sodium sulfite to the bath seemed to improved the adherence of the alloy plate. For this reason, the use of hydrogen peroxide to remove hexavalent chromium was temporarily discontinued in favor of reduction by sodium sulfite.

Pilot-Cell Tests 5389-50A to -50B (Table 3)

These two tests showed that the use of sodium sulfite for complete reduction of hexavalent chromium ion is not practical. A 16-liter bath normally requires only 3.2 grams Na_2SO_3 or 6.4 grams $Na_2SO_3 \cdot 7H_2O$ for successful operation, provided the anolyte is kept separated from the catholyte. A one-hour plating test similar to either 5389-50A or -50B will require approximately 100 grams $Na_2SO_3 \cdot 7H_2O$ to maintain complete reduction of the hexavalent chromium ion produced at the anode to the trivalent state. It is likely that, with this method of reduction, the plating bath would soon be contaminated with excessive amounts of sulfur compounds.

Specimen and Short-Tube Tests 5389-51A to -52D (Table 3)

This series of tests was designed to isolate the variable or combination of variables that was most likely to be causing the poor ad-

heater. The apparatus was a small-scale arrangement of the pilot cell. Flat 1-inch by 6-inch panels or short 3-inch or 4-inch lengths of 1-1/2-inch-diameter steel tube were used as cathodes. Results indicated that good adhesion could be expected from either an anode without a diaphragm or one with a diaphragm, provided a current density of approximately 400 amp./sq. ft. is maintained and sufficient space exists between the diaphragm and cathode to permit easy escape of gas. By using a 1/4-inch by 1/8-inch by 1-inch lead strip as a moving anode, without a diaphragm, good adherence could be duplicated on either flat panels or the short tubes.

Pilot-Cell Tests 5389-52E to 5389-52G (Table 3)

Using the information gained in the above tests, a 3/16-inch by 2-inch lead-tubing anode was substituted for the 3/4-inch by 7-inch anode on the pilot cell. A 40-mm. by 12-inch electropolished gun tube was plated at 400 amp./sq. ft. with a catholyte flow of 1700 ml./min. The deposit was blistered and peeled the full length of the tube. The tube had been thoroughly degreased, electrocleaned, and given a short hydrochloric acid dip prior to plating. Good adhesion was not attained on the first 40-mm. gun-tube section until it had been stripped and plated four times. This indicated a possible benefit from a severe etch. This was done on Test 5389-52F, and the deposit showed good adherence to the electropolished bore surface. The top and bottom "thief sections" (added

lengths of tube) used in this test had a slightly larger bore than the gun tube; consequently, the plate at the top and bottom of the gun tube was of inferior quality. This was corrected in Test 5389-52G by using 3-inch-long sections of a 40-mm. gun tube for the top and bottom "thief". Samples of this gun tube were given to representatives of Watertown Arsenal and Watervliet Arsenal. The plating results were good and indicated that a successful method was near.

SUMMARY OF THE BEST PLATING PROCEDURE TO DATE

The "Standard Bath Formulation"* has been modified to give increased throwing power and less pitting. The formulation recommended at present is as follows:

Ammonium Hydroxide (28%) NH_4OH	60	ml./l.
Chromium Ammonium Sulfate $Cr_2(SO_4)_3(NH_4)_2 \cdot SO_4 \cdot 24H_2O$	700	g./l.
Ferrous Ammonium Sulfate $FeSO_4 \cdot (NH_4)_2SO_4 \cdot 6H_2O$	13.5	g./l.
Magnesium Sulfate $MgSO_4 \cdot 7H_2O$	20.0	g./l.
Ammonium Sulfate $(NH_4)_2SO_4$	50.0	g./l.
Sodium Sulfite (Stock solution containing 0.005 g./ml.) Na_2SO_3	50	ml./l.

* The "Standard Bath Formulation" was described in the November 15, 1949, report, page 10.

CONFIDENTIAL

RESTRICTED

Duponol L.* ..... 0.125 g/l.

The recommended procedure of making up the bath still follows the detailed instructions previously reported**.

In the plating of steel tubes of 1.5-inch inside diameter, it is recommended that plating variables be maintained within the following limits:

Electrolyte Flow	1 to 2 liters/min.
Cathode Current Density	375 to 400 amp./sq. ft.
pH (at 145°F.)	1.4 to 1.7
Temperature of Bath	140° to 150°F.

Anode Construction

3/16- to 1/2-inch copper rod, 2 to 7 inches long, coated with 0.015-inch thickness of 90 per cent Pb - 10 per cent Sn electroplate.

Reduction of Hexavalent Chromium in Bath

Reduction of hexavalent chromium is accomplished indirectly by oxidizing the Cr^{+6} to perchromate with 30 per cent hydrogen peroxide. On standing, the perchromate decomposes to form Cr^{+3}.

Rate of Deposition

A flat steel cathode, inserted in a Lucite "picture-frame" fixture with 1 square inch of the cathode exposed, will receive 94 per cent Cr - 6 per cent Fe alloy deposit at a rate of approximately 0.010 inch per hour when a cathode current density of 400 amp./sq.ft. is applied in a still

* Surface active agent manufactured by E. I. du Pont de Nemours & Co., Wilmington, Delaware.

** op. cit.

RESTRICTED

CONFIDENTIAL

CONFIDENTIAL RESTRICTED

plating operation. A comparable rate of deposition has not been obtained in tube plating up to this time. Tests are in progress to show the effect of catholyte flow on rate of deposition of the alloy.

Adherence of Alloy Deposit

The adherence of the alloy deposit on flat cathodes of brass, low-carbon steel, or stainless steel has been generally very good and easy to obtain by using customary precleaning treatments.

In tube plating with a moving anode, the initial deposit of approximately the same length as the anode has shown good adherence to the steel bore surface. As the anode moves down the inside of the tube, the adherence is less satisfactory thus far. This situation will receive further study.

JEB:CAS:CLF/JH
October 10, 1950

CONFIDENTIAL RESTRICTED

CONFIDENTIAL
UNCLASSIFIED

INDEXES OF FIGURES AND TABLES

FIGURE 1. PHOTOGRAPH OF PILOT UNIT FOR PLATING GUN-TUBE SECTIONS.

FIGURE 2. SCHEMATIC DRAWING OF PILOT-SCALE PLATING UNIT.

FIGURE 3. INSOLUBLE-ANODE ASSEMBLY WITH DIAPHRAGM.

FIGURE 4. VARIOUS TYPES OF ANODE ASSEMBLIES USED IN PLATING TESTS.

TABLE 1. DETAILS OF PLATING TESTS.

TABLE 2. DETAILS OF PLATING TESTS.

TABLE 3. DETAILS OF PLATING TESTS.

UNCLASSIFIED
CONFIDENTIAL

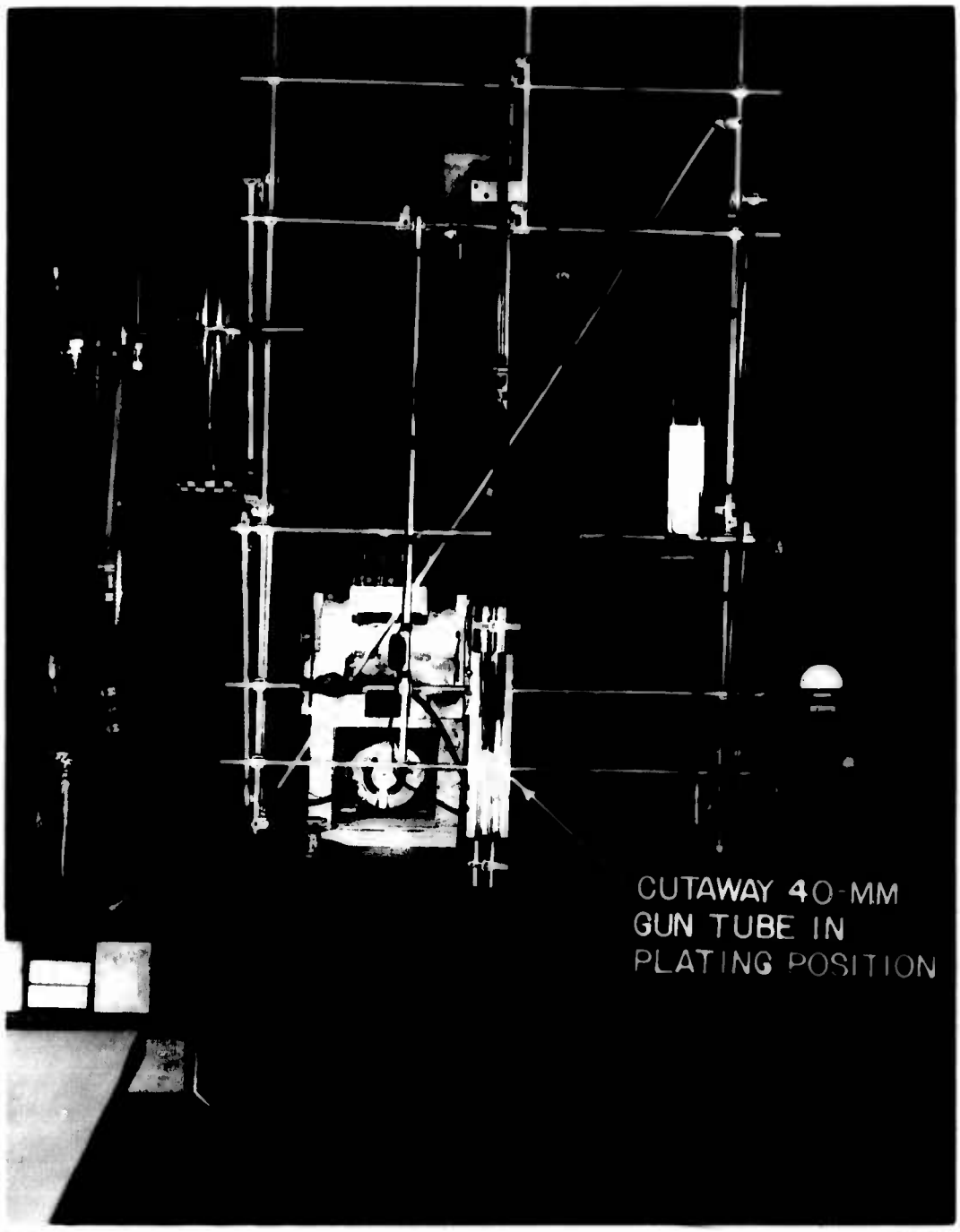

X3217 72726

Figure 1. Photograph of pilot unit for plating gun-tube sections.

CONFIDENTIAL

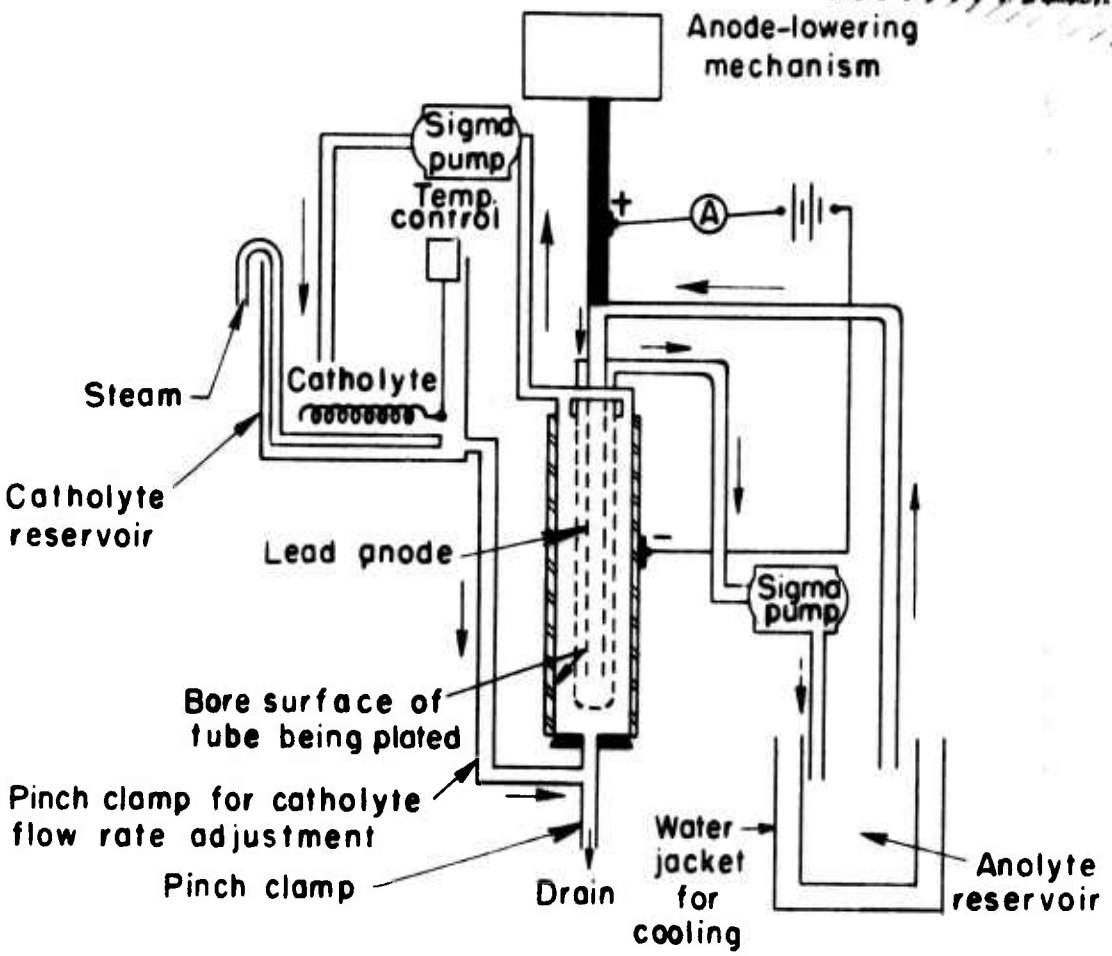

FIGURE 2. SCHEMATIC DRAWING OF PILOT-SCALE PLATING UNIT

CONFIDENTIAL

CONFIDENTIAL

A. Catholyte sucked up tube by sigma pump and then into 16-liter glass tank

B. Anolyte recirculated by sigma pump

RESTRICTED

1. Rubber tubing

2. Fine-porosity alundum diaphragm thimble

3 Area of tube being plated

4 40-mm gun tube section

5. Rubber stopper

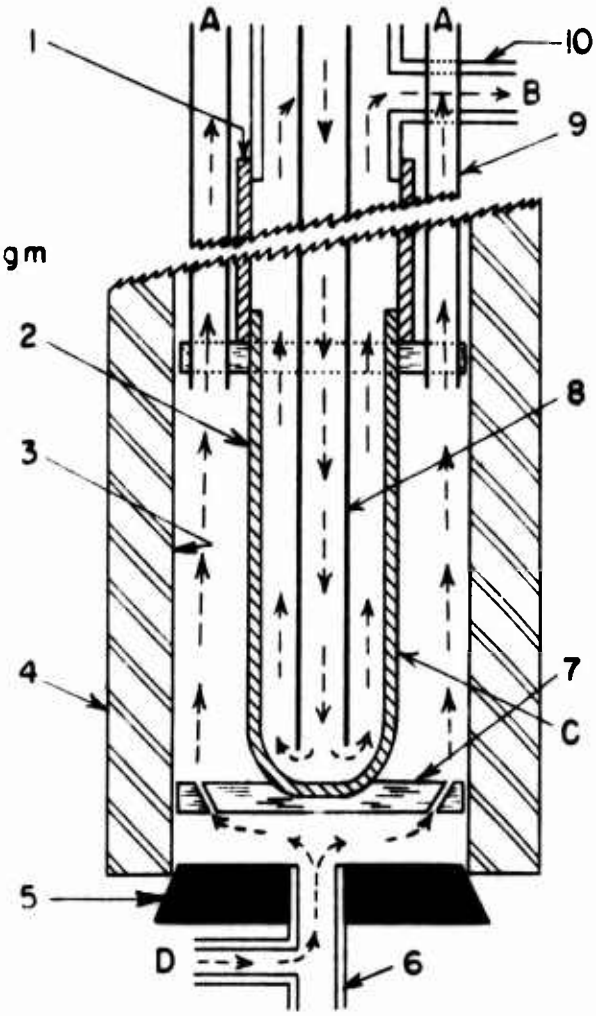

10. Glass tubing

9. Amber tubing

8. Lead tubing anode

7. Lucite spacer

6. Glass tubing

C. Small amount of catholyte drawn through alundum diaphragm

D. Catholyte gravity flow from 16-liter cell

FIGURE 3. INSOLUBLE ANODE ASSEMBLY WITH DIAPHRAGM

RESTRICTED

CONFIDENTIAL

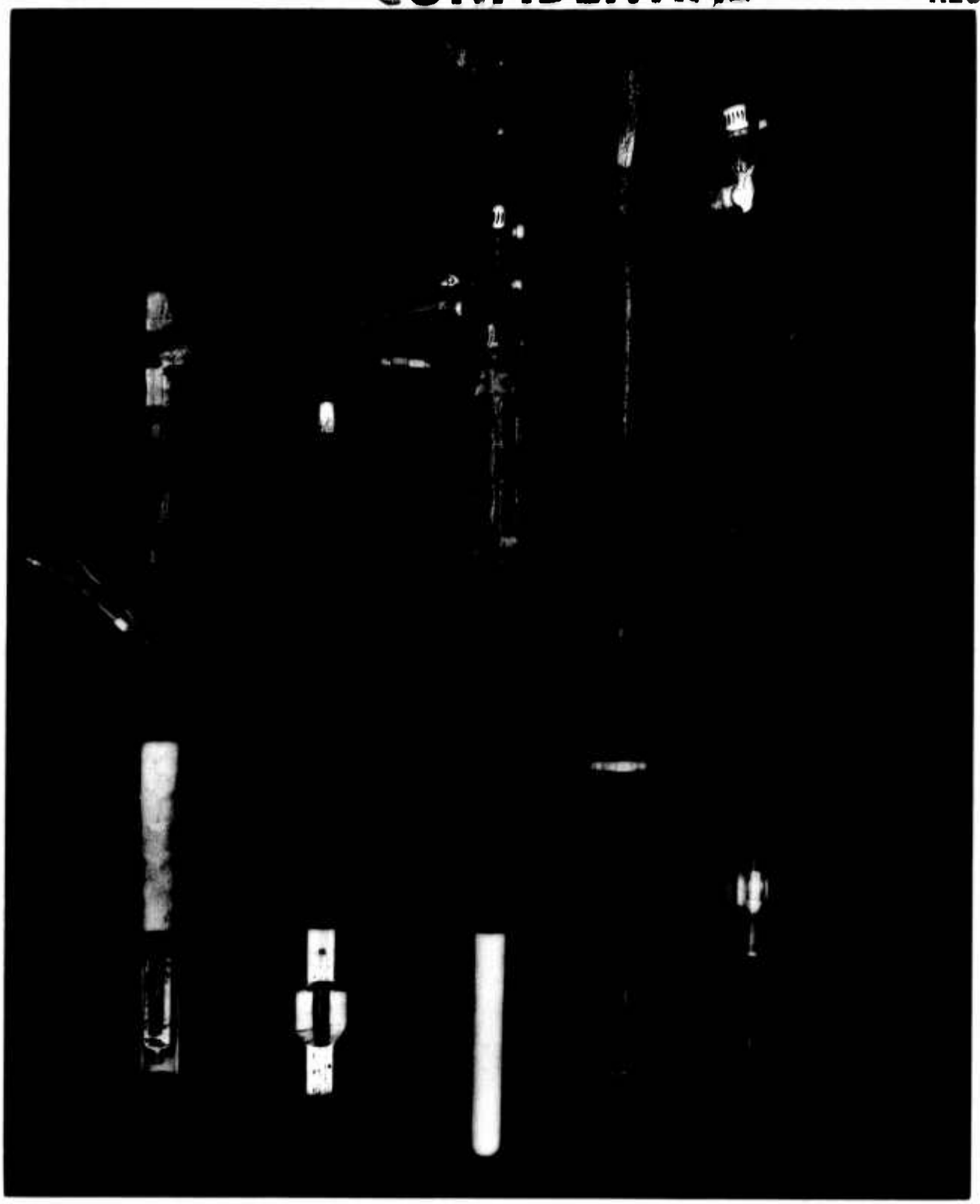

X2838 72725

Figure 4. Various types of anode assemblies used in plating tests.

REPRODUCED AT GOVERNMENT EXPENSE

TABLE 1. DETAILS OF PLATING TESTS

Test No.	Bath No.	Time (Hours)	Cathode Material	Cathode C. D. (Amp./Sq.Ft.)	pH	
			Bath Composition: 300 g./l. $Cr_2(SO_4)_3(NH_4)_2SO_4 \cdot 24H_2O$, 5.0 g./l. Fe $(NH_4)_2SO_4$. 1500-ml. volume.			
4662-69A	69A	2-1/2	Brass strip, 1 sq.in. plated	144	2.3	Pb-1% Ag wit
-74A	"	"	Ditto	"	1.8	
-75A	"	3	"	"	2.0	
			Bath Composition: 700 g./l. $Cr_2(SO_4)_3(NH_4)_2SO_4 \cdot 24H_2O$, 13.5 g./l. F Na_2SO_3. 16-liter volume.			
4662-80A	80A	—	Steel tube, 1-1/2" I.D.	300	1.0	Pb-1% Ag wit
-80B	"	—	Ditto	"	1.0	Magnesium an
-80C	"	—	Brass strip, 1 sq.in. plated	"	1.0	Pb-1% Ag wit
-80D	"	—	Ditto	"	1.6	
-81A	"	—	Steel tube, 2-3/4" I.D.	"	1.5	Cooled Pb-1%
-82A	"	—	Ditto	350	1.5	Water-cooled
-85A	"	—	"	"	1.5	
-87A	"	—	"	"	1.5	

102

REPRODUCED AT GOVERNMENT EXPENSE

CONFIDENTIAL
RESTRICTED

Type Anode	Description of Deposits	Remarks
$O_4(NH_4)_2SO_4 \cdot 6H_2O$, 10 g./l. $MgSO_4 \cdot 7H_2O$, 0.1 g./l. Na_2SO_3, 50 g./l.		
diaphragm	Cross section shows nodular deposit	Temp. 108-110°F.
Ditto	Sound structure at 250X	Temp. raised to 118°F.
"	Ditto	Shows that "high throwing power bath" must be operated at 118-120°F. and at pH 1.8-2.0 to get sound structure
$SO_4(NH_4)_2SO_4 \cdot 6H_2O$, 70 g./l. $(NH_4)_2SO_4$, 10 g./l. $MgSO_4 \cdot XH_2O$, 0.32 g./l.		
diaphragm	Poor deposit, blistered	—
Ne	Ditto	—
diaphragm	"	1-l. bath from 16-l. -80A bath
Ditto	Good appearing deposit	16-l. bath adjusted to 1.5 pH
anode with diaphragm	Thin, center portion blistered	Filtering of cathelyte caused flow to be retarde
gnesium anode 4" long	Top and bottom good plate, center blistered	Filter removed, tube cool on O.D. by water spray
Ditto	7" of tube plated, 3 small spots blistered	Spray mechanism for tube improved
"	Plate badly peeled	More precaution used in cleaning tube, but magnesium ammonium sulfat deposited on tube

CONFIDENTIAL
RESTRICTED

REPRODUCED AT GOVERNMENT EXPENSE

TABLE 2. DETAILS OF PLATING TESTS

Test No.	Bath No.	Time (Hours)	Cathode Material	Cathode Current Density (Amp./Sq.Ft.)	Catholyte Condit Flow (Ml./Min.)	pH	T (
	94A	Bath Composition: 300 g./l. $Cr_2(SO_4)_3(NH_4)_2SO_4 \cdot 24H_2O$, 5.0 g./l. $FeSO_4$(Anolyte Stock Solution: 50 g./l. $(NH_4)_2SO_4$ with sufficient H_2SO_4 added					
4662-95A	"	—	Steel tube, 1-1/2" I.D.x12" long	275	—	1.6	
-95B	"	—	Ditto	"	—	1.5	
-97A	"	1-1/2	"	315	—	1.6	1
-97B	"	"	"	155	—	1.6	
		Additions to Bath 94A to Make Following Composition: 500 g./l. $Cr_2(SO_4)_3(NH_4)_2SO_4 \cdot 24H_2O$, 8.3 g./l. $FeSO_4$(					
-99A	"	1-1/2	Steel tube, 1-1/2" I.D.x12" long	255	—	1.3	1
-100A	"	"	Ditto	"	—	1.3	
5389-1A	"	1	"	315	—	1.7	1
-1B	"	"	"	250	—	1.7	
		Additions to Bath to Make the Following Composition: 700 g./l. $Cr_2(SO_4)_3(NH_4)_2 \cdot 24H_2O$, 13.5 g./l. $eSO_4(NH_4$					
-2A	"	—	40-mm. gun-tube section 12" long	400	—	1.0	1

183

REPRODUCED AT GOVERNMENT EXPENSE

Cathode Current Density (A./Sq.Ft.)	Catholyte Conditions Flow (Ml./Min.)	pH	Temp. (°F.)	Type Anode	Anolyte Negative Pressure (Inch of Hg)	Anolyte Temp. (°F.)	Descr
$SO_4 \cdot 24H_2O$, 5.0 g./l. $FeSO_4(NH_4)_2SO_4 \cdot 6H_2O$, 10 g./l. $MgSO_4 \cdot XH_2O$, 50 g./l. $(NH_4)_2SO_4$, 1.0 g./l. N with sufficient H_2SO_4 added to make pH 1.5 at 120°F.							
275	--	1.6	128	4" long lead tube with diaphragm	Slight	136	Good one s
"	--	1.5	"	Ditto	None	"	Depos as Te
315	--	1.6	130	"	Slight	130	Nonco tered
155	--	1.6	"	"	"	--	Very a fe
mposition: $_2SO_4 \cdot 24H_2O$, 8.3 g./l. $FeSO_4(NH_4)_2SO_4 \cdot 6H_2O$, 10 g./l. $MgSO_4 \cdot XH_2O$, 50 g./l. $(NH_4)_2SO_4$, 1.12 g./l.							
255	--	1.3	140	4" long lead tube with diaphragm	Slight	140	Depo spot
"	--	1.3	"	Ditto	"	"	Depo bett
315	--	1.7	140	"	"	148	Good for plat
250	--	1.7	"	"	"	"	Depo
mposition: $_2 \cdot 24H_2O$, 13.5 g./l. $FeSO_4(NH_4)_2SO_4 \cdot 6H_2O$, 10 g./l. $MgSO_4 \cdot XH_2O$, 50 g./l. $(NH_4)_2SO_4$, 1.12 g./l. N							
400	--	1.0	150	4" long lead tube with diaphragm	Positive	180	Depo bli peel

REPRODUCED AT GOVERNMENT EXPENSE

CONFIDENTIAL

RESTRICTED

Anolyte Negative Pressure (Inch of Hg)	Anolyte Temp. (°F.)	Description of Deposit	Remarks
50 g./l. $(NH_4)_2SO_4$, 1.0 g./l. $Na_2SO_3 \cdot 7H_2O$. 16-liter-volume bath.			
Slight	136	Good adherence except one small spot	Best test so far with 1-1/2" diameter steel tube
None	"	Deposit not as good as Test -95A	Probably due to slight positive anolyte pressure
Slight	130	Noncontinuous, blistered in spots	--
"	--	Very good except for a few small areas	Approximately 6" length of tube plated
50 g./l. $(NH_4)_2SO_4$, 1.12 g./l. $Na_2SO_3 \cdot 7H_2O$. 16-liter volume.			
Slight	140	Deposit peeled in spots	Cooling water on tube varied
"	"	Deposit slightly better than -99A	32 g. $Na_2SO_3 \cdot 7H_2O$ added to 16-l. bath
"	148	Good adhesion except for last portion plated	No cooling of steel tube
"	"	Deposit blistered	Bath filtered after this test
0 g./l. $(NH_4)_2SO_4$, 1.12 g./l. $Na_2SO_3 \cdot 7H_2O$. 16-liter volume.			
Positive	180	Deposit badly blistered and peeled	Removal of gas from anolyte compartment not fast enough, causing build-up of positive pressure

CONFIDENTIAL

RESTRICTED

REPRODUCED AT GOVERNMENT EXPENSE

TABLE 2. CONTINUED

Test No.	Bath No.	Time (Hours)	Cathode Material	Cathode Current Density (Amp./Sq.Ft.)	Catholyte Flow (Ml./Min.)
5389-2B	94A	—	40-mm. gun-tube section 12" long	315	—
-3A	"	—	Ditto	"	—
		Bath Additions:	3.0 g./l. Kleanright Inhibitor added to Bath 94A		
-10A	"	—	Tube, 1-1/2" I.D.x12" long	400	—
-10B	"	—	Ditto	315	—
-10C	"	1/2	"	400	—
-10C	"	—	40-mm.x12" gun-tube section	"	—
		Bath Treatment:	Heated to 170°F. 1 g./l. activated charcoal and No. 12 Whatman filter paper. Specific gravity a inhibitor added prior to Test 5389-10A.		
-13A	"	—	Steel tube, 1-1/2" I.D.x12" long	400	—
-13B	"	—	Ditto	"	—
-14A	"	—	"	320	—

REPRODUCED AT GOVERNMENT EXPENSE

lyte C w in.)	pH	ditions Temp. (°F.)	Type Anode	Anolyte Negative Pressure (Inch of Hg)	Anolyte Temp. (°F.)	Description of Deposit	
	1.3	150	4" long lead tube with diaphragm	Slight	140	Deposit badly peeled	Same Test for
	1.3	"	Ditto	"	"	Ditto	
94A.							
	1.3	—	"	—	—	Very poor adhesion	Large on su asses eesoi curre
	1.3	—	"	—	—	Ditto	
	1.3	—	"	—	—	"	
	1.3	—	"	—	—	"	Same 5389-

and 0.5 g./l. ammonium persulfate stirred in. Let stand at 170°F. for 24 hours. Bath filtered throug
y adjusted to 1.22 with temperature lowered to 140°F. This treatment used to remove the organic

	1.6	143	4" long lead tube with diaphragm	—	—	Very good deposit with only slight blistering	Poor cause lower
	1.6	"	Ditto	—	—	Deposit better than -13A	Desig chang in ca creas
	1.6	"	"	—	—	Blistered spots where anode stopped	Anode manua flash start mecha

CONFI
RES

REPRODUCED AT GOVERNMENT EXPENSE

CONFIDENTIAL
RESTRICTED

Anolyte Negative Pressure (Inch of Hg)	Anolyte Temp. (°F.)	Description of Deposit	Remarks
Slight	140	Deposit badly peeled	Same gun-tube liner as for Test -2A. Stripped in HCl for -2B and -3A.
"	"	Ditto	—
—	—	Very poor adhesion	Larger diameter tubing used on suction side of anode assembly to carry away excessive gas caused by high current density
—	—	Ditto	—
—	—	"	—
—	—	"	Same tube used as in Test 5389-2A

and at 170°F. for 24 hours. Bath filtered through
. This treatment used to remove the organic

—	—	Very good deposit with only slight blistering	Poor adhesion thought to be caused by Lucite spacer on lower portion of diaphragm
—	—	Deposit better than -13A	Design of anode spacer changed so that turbulence in catholyte flow was decreased.
—	—	Blistered spots where anode stopped	Anode moved up and down manually inside tube to give flash plate. Then anode started at top and lowered mechanically.

CONFIDENTIAL
RESTRICTED

REPRODUCED AT GOVERNMENT EXPENSE

TABLE 2. CONTINUED

Test No.	Bath No.	Test (Hours)	Cathode Material	Cathode Current Density (Amp./Sq.Ft.)	Catholyte Condi Flow (Ml./Min.)	pH
5389-14B	94A	--	Steel tube, 1-1/2" I.D.x12" long	320	—	1.6
-14C	"	--	40-mm.x12" gun-tube section	400	—	1.6
		Bath Addition: 10 g./l. ammonium persulfate.				
-16A	"	1-1/2	Steel tube, 1-1/2" I.D.x18" long	320	—	1.7
-17A	"	1-1/2	Ditto	"	—	1.7
-23A	"	Start	"	"	525	—
		1/4	"	"	490	—
		1/2	"	150-320	550	—
-23B	"	Start	"	300	—	—
		1/4	"	"	620	—
-23C	"	Start	"	320	635	—
		1/2	"	"	"	—
		3/4	"	400	590	—
-23D	"	Start	"	380	490	1.7
		1/4	"	"	320	—
		1/2	"	"	—	—
		3/4	"	"	490	—
		1	"	390	580	—
		1-1/4	"	380	570	—
		1-1/2	"	"	"	2.1

1083

REPRODUCED AT GOVERNMENT EXPENSE

Catholyte Conditions Flow (L./Min.)	pH	Temp. (°F.)	Type Anode	Anolyte Negative Pressure (Inch of Hg)	Anolyte Temp. (°F.)	Description of Deposit
—	1.6	143	4" long lead tube with diaphragm	—	—	Top and bottom good, middle area blistered
—	1.6	143	Ditto	—	—	Lower half very good, top half poor
—	1.7	"	"	—	80-120	Top 2" blistered, rest of tube very good
—	1.7	"	"	—	"	Blistered deposit all the way down tube
425	—	"	"	-2.0	115	
490	—	"	"	-1.8	100	
550	—	"	"	-0.8 to -1.5	120	Poor adherence, deposit blistered
—	—	146	"	-1.6	—	
620	—	"	"	-1.6	115	Ditto
635	—	"	"	-1.9	118	
"	—	"	"	0	"	
590	—	"	"	-1.4	"	Poor adherence of deposit of steel
490	1.7	120	"	-1.9	120	
520	—	"	"	-1.8	"	
—	—	"	"	-1.8	"	
490	—	"	"	-1.8	"	
560	—	"	"	-1.8	"	
570	—	"	"	-1.8	"	
"	2.1	"	"	-1.8	"	Deposit nonadherent

REPRODUCED AT GOVERNMENT EXPENSE

CONFIDENTIAL
RESTRICTED

Anolyte Negative Pressure (inch of Hg)	Anolyte Temp. (°F.)	Description of Deposit	Remarks
—	—	Top and bottom good, middle area blistered	—
—	—	Lower half very good, top half poor	Same gun-tube section used in Test 5389-10C
—	80-120	Top 2" blistered, rest of tube very good	Catholyte flow very slow at start of test. Might account for blistering
—	"	Blistered deposit all the way down tube	16-liter bath raised 6" to get increased gravity flow necessary when using 18" long tubes.
-2.0	115		
-1.8	100		
[illegible] to -1.5	120	Poor adherence, deposit blistered	Leak in anolyte circuit hose
-1.6	—		
-1.6	115	Ditto	Ditto
-1.9	118		
0	"		Pinhole in anolyte tube repaired.
-1.4	"	Poor adherence of deposit of steel	Test stopped
-1.9	120		
-1.8	"		Leak in anolyte circuit repaired
-1.8	"		
-1.8	"		
-1.8	"		
-1.8	"		
-1.8	"	Deposit nonadherent	

CONFIDENTIAL

REPRODUCED AT GOVERNMENT EXPENSE

Catholyte Conditions Flow (ml./Min.)	pH	Temp. (°F.)	Type Anode	Anolyte Negative Pressure (Inch of Hg)	Anolyte Temp. (°F.)	Description of
530	1.5	146	4" long lead tube with diaphragm	-1.85	120	
520	—	"	Ditto	-1.80	130	
330	—	"	"	-1.4	118	
400	—	"	"	—	"	Top of tube go bottom nonadhe

REPRODUCED AT GOVERNMENT EXPENSE

CONFIDENTIAL
RESTRICTED

	Anolyte Negative Pressure (Inch of Hg)	Anolyte Temp. (°F.)	Description of Deposit	Remarks
Diaphragm	-1.85	120		
	-1.80	130		
	-1.4	118		
	--	"	Top of tube good, bottom nonadherent	Catholyte flow greater than 500 ml./min. apparently necessary for good adhesion of deposit to tube. Capacity of Sigmamotor pump insufficient to accomplish this.

RESTRICTED
CONFIDENTIAL

REPRODUCED AT GOVERNMENT EXPENSE

TABLE 3. DETAILS OF PLATING TESTS

Test No.	Bath No.	Time (Hours)	Cathode Material	Cathode Current Density (Amp./Sq.Ft.)	Catholyt Flow (Ml./Min.
		Bath Treatment and Additions:	Present volume of Bath 94A 10 liters, 6 and 2 g./l. ammonium persulfate added a liters of new bath of the following com 20 g./l. $MgSO_4 \cdot 7H_2O$, 0.15 g./l. Na_2SO_3. of bath lowered to 140°F. pH adjusted		
5389-30A	94A	1/2	Steel tube, 1-1/2" I.D.x18" long	400	900
-30B	"	1-1/2	Ditto	"	1000
-31A	"	3	"	"	"
-32A	"	2-1/2	"	320	900
-34A	"	1/4 1/4	" "	" "	" "
-35A	"	1-1/2	"	320	1000
-37A	"	1-1/2	"	"	1100
		Bath Additions:	10 g./l. ammonium persulfate.		
-38A	"	1-1/2	Steel tube, 1-1/2" I.D.x18" long	"	1000

REPRODUCED AT GOVERNMENT EXPENSE

CONFIDE

Catholyte Conditions Flow (Gal./Min.)	pH	Temp. (°F.)	Type Anode	Description of Deposit	Rem
liters, 6 liters having been used up as anolyte in preceding tests. 2 g./l. activated charcoal added and stirred into the 10-liter bath. Temperature of bath raised to 170°F. To this, 6 lowing composition was added: 700 g./l. $Cr_2(SO_4)_3(NH_4)_2 \cdot 24H_2O$, 13.5 g./l. $FeSO_4(NH_4)_2SO_4 \cdot 6H_2O$, Na_2SO_3. Bath filtered through No. 12 paper. Specific gravity adjusted to 1.26. Temperature adjusted to 1.4.					
900	1.4	140	4" lead tube with diaphragm	Initial deposit good	Failure of Si hose stopped
1000	1.4	"	Ditto	Good appearing, adherent deposit	Deposit showe from above tr
"	1.4	"	"	Top good, middle badly blistered, bottom showed fair adhesion	Tube plated f then double p
900	—	"	"	Very good plate at top, blistered at bottom	Anode travel
"	—	"	"	—	Anode station
"	—	"	"	Very good deposit	Tube drained Plate first d taken into so posit on inve very good.
1000	—	—	"	Tube badly blistered	Anode held st raised at rat
1100	--	—	"	Deposit good at start. Progressively worse as test continued.	Tube given se Anode held st raised same a
1000	1.6	--	"	Good appearing, adherent deposit	Anode station raised. Ammon treatment appa ble for good a

RESTRICTE

CONFIDEN

293

REPRODUCED AT GOVERNMENT EXPENSE

CONFIDENTIAL
RESTRICTED

	Description of Deposit	Remarks
	In preceding tests. 2 g./l. activated charcoal perature of bath raised to 170°F. To this, 6 $(NH_4)_2 \cdot 24H_2O$, 13.5 g./l. $FeSO_4(NH_4)_2SO_4 \cdot 6H_2O$, Specific gravity adjusted to 1.26. Temperature	
agm	Initial deposit good	Failure of Sigmamotor-pump hose stopped test
	Good appearing, adherent deposit	Deposit showed improvement from above treatment
	Top good, middle badly blistered, bottom showed fair adhesion	Tube plated full length, then double plated
	Very good plate at top, blistered at bottom	Anode travel 4.6 in./hr.
	— Very good deposit	Anode stationary during test Tube drained and inverted. Plate first deposited was taken into solution. Deposit on inverted section very good.
	Tube badly blistered	Anode held stationary. Tube raised at rate of 1 in./6 min.
	Deposit good at start. Progressively worse as test continued.	Tube given severe HCl etch. Anode held stationary. Tube raised same as for Test -35A.
	Good appearing, adherent deposit	Anode stationary. Tube raised. Ammonium persulfate treatment apparently responsible for good adhesion.

RESTRICTED
CONFIDENTIAL

REPRODUCED AT GOVERNMENT EXPENSE

TABLE 3. CONTINUED

Test No.	Bath No.	Time (Hours)	Cathode Material	Cathode Current Density (Amp./Sq.Ft.)	Catholyte Flow (Ml./Min.)
5389-39A	94A	1	Steel tube, 1-1/2" I.D.x18" long	300	1700
-40A	"	"	Ditto	"	"
-41A	"	1-1/2	"	"	"
-42A	"	1	"	"	"
-44A	"	1/4	"	"	"
-44C	"	1/2	"	"	"
-50A	"	1	"	"	2000
-50B	"	1	"	280	"
-51A	"	1/4	1" x 6" x 0.012" steel strip	300	500

REPRODUCED AT GOVERNMENT EXPENSE

athode urrent ensity /Sq.Ft.)	Catholyte Conditions Flow (Ml./Min.)	pH	Temp. (°F.)	Type Anode	Description of Deposit
300	1700	—	—	Lead tube, 3/4" diam.x7". No diaphragm used.	Top 8" of deposit good, rest blistered
"	"	—	142	Ditto	Ditto
"	"	—	"	"	"
"	"	—	"	"	Top 8" fair deposit blistered
"	"	—	"	4" lead tube with diaphragm	Deposit blistered in usual area right after bottom of anode moved to a lower position in steel tube
"	"	—	"	Ditto	Good deposit with good adhesion
"	2000	—	—	Lead tube, 3/4" diam.x7". No diaphragm used.	Blistered spot on tube corresponded to the electrical connection 6" from top of tube
280	"	—	—	"	Blistered area 9" from top of tube corresponding to the electrical connection 9" from top
300	500	1.6	143	1/4" x 1/8" x 2" lead strip with diaphragm. Lucite spacer at bottom.	Blistered area on cathode corresponding to area adjacent to lower tip of anode

REPRODUCED AT GOVERNMENT EXPENSE

CONFIDENTIAL
RESTRICTED

Description of Deposit	Remarks
Top 8" of deposit good, rest blistered	—
Ditto	5 g./l. ammonium persulfate added to bath
"	—
Top 8" fair deposit blistered	—
Deposit blistered in usual area right after bottom of anode moved to a lower position in steel tube	At end of test, 5.0 g. $Na_2SO_3 \cdot 7H_2O$ added to bath and circulated in catholyte system for 15 min.
Good deposit with good adhesion	Use of 30% H_2O_2 for indirect reduction of hexavalent chromium ion temporarily discontinued in favor of reduction by sodium sulfite
Blistered spot on tube corresponded to the electrical connection 6" from top of tube	100 g. $Na_2SO_3 \cdot 7H_2O$ required to continuously reduce the hexavalent chromium formed
Blistered area 9" from top of tube corresponding to the electrical connection 9" from top	Approximately the same quantity of $Na_2SO_3 \cdot 7H_2O$ required for continuous reduction of hexavalent chromium. Use of sodium sulfite discontinued.
Blistered area on cathode corresponding to area adjacent to lower tip of anode	Apparatus used was small-scale arrangement of pilot cell. Anode travel approx. 1"/6 min. downward into 1-1/2" diam. Lucite tube. Catholyte flow by gravity into bottom of cell. Removed by sigma pump.

CONFIDENTIAL
RESTRICTED

REPRODUCED AT GOVERNMENT EXPENSE

TABLE 3. CONTINUED

Test No.	Bath No.	Time (Hours)	Cathode Material	Cathode Current Density (Amp./Sq.Ft.)	Catholyte Flow (Ml./Min.)
5389-51B	94A	1/4	1" x 6" x 0.012" steel strip	450	500
-51C	"	1/4	Ditto	"	"
-51D	"	1/4	"	"	"
-51E	"	1-1/2	Steel tube, 1-1/2" I.D.x18" long	"	1700
-52A	"	1/4	1" x 6" x 0.012" steel strip	300	500
-52B	"	1/4	Ditto	400	"
-52C	"	1/4	Steel tube, 1-1/2" I.D.x3" long	300	"
-52D	"	1/4	Steel tube, 1-1/2" I.D.x4" long	"	"
-52E	"	2	40-mm. x 12" gun tube	400	1700

REPRODUCED AT GOVERNMENT EXPENSE

CONFIDENTIAL RESTRICTED

Catholyte Conditions Flow (ml./Min.)	pH	Temp. (°F.)	Type Anode	Description of Deposit	Rem
500	1.6	143	1/4" x 1/8" x 2" lead strip with diaphragm. Lucite spacer at bottom.	Adherence of deposit at critical area improved	Use of higher density reduc
"	1.6	"	Lucite spacer removed	Deposit improved. Very good with exception of a few small pits.	
"	1.6	"	Ditto	Very good appearing deposit. Small pits eliminated.	0.5 g./l. Du agent added ting.
1700	1.6	"	4" lead tube with diaphragm	Initial deposit full length of anode good. Blistered as anode started to travel downward.	Results from tests could applied to p same results
500	1.6	"	1/4" x 1/8" x 1/2" lead strip, no diaphragm	Good appearing deposit	Note short-l more area fo
"	1.6	"	1/4" x 1/8" x 1" lead strip, no diaphragm	Ditto	D
"	1.6	"	Ditto	"	Small-scale steel tube i small scale panels.
"	1.6	"	"	"	D
1700	1.4	142	3/16" x 2" lead tubing	Blistered deposit full length of tube	Gun tube ele given a ligh etch. Depos examination. and given a diluted HCl.

RESTI

CONFIDE

REPRODUCED AT GOVERNMENT EXPENSE

CONFIDENTIAL
RESTRICTED

Description of Deposit	Remarks
Adherence of deposit at critical area improved	Use of higher cathode current density reduced blistered area
Deposit improved. Very good with exception of a few small pits.	—
Very good appearing deposit. Small pits eliminated.	0.5 g./l. Duponol M.E. wetting agent added to eliminate pitting.
Initial deposit full length of anode good. Blistered as anode started to travel downward.	Results from above small-scale tests could not be directly applied to pilot cell with same results.
Good appearing deposit	Note short-length anode. Also more area for gassing
Ditto	Ditto
"	Small-scale test in 1-1/2" diam. steel tube in agreement with small scale tests using flat panels.
"	Ditto
Blistered deposit full length of tube	Gun tube electrocleaned and then given a light hydrochloric acid etch. Deposit stripped after examination. Tube pumice scrubbed and given a 2-min. etch in undiluted HCl.

RESTRICTED
CONFIDENTIAL

REPRODUCED AT GOVERNMENT EXPENSE

TABLE 3. CONTINUED

Test No.	Bath No.	Time (Hours)	Cathode Material	Cathode Current Density (Amp./Sq.Ft.)	Catholyte Flow (Ml./Min)
5389-52F	94A	2	40-mm. x 12" gun tube	400	1700
-52G	"	2-1/2	Ditto	"	"

REPRODUCED AT GOVERNMENT EXPENSE

CONFI

de nt ty Ft.)	Catholyte Conditions Flow (Ml./Min)	pH	Temp. (°F.)	Type Anode	Description of Deposit	
	1700	1.4	142	3/16" x 2" lead tubing	Very good appearing deposit. Adherence also very good.	Appa steel seve adhe each posi to b thie
	"	1.4	"	Ditto	Best deposit so far obtained on any tube	This save insp sect Wate tion The at W inta

CONFI

REPRODUCED AT GOVERNMENT EXPENSE

CONFIDENTIAL
RESTRICTED

Description of Deposit	Remarks
Very good appearing deposit. Adherence also very good.	Apparently the electropolished steel gun-tube bore must be severely etched to obtain good adhesion. 3" length sawed from each end of this tube and deposit stripped. These sections to be used as an upper and lower thief for the next test.
Best deposit so far obtained on any tube	This 40-mm. gun-tube section sawed in half lengthwise for inspection. One of the half sections was cut in two at Watervliet Arsenal. One section remains at Watervliet. The second section was examined at Watertown Arsenal. Plate was intact after sawing.

CONFIDENTIAL
RESTRICTED