UNCLASSIFIED

AD NUMBER
ADA801449
LIMITATION CHANGES
TO: **Approved for public release; distribution is unlimited. Document partially illegible.**
FROM: **Distribution authorized to U.S. Gov't. agencies and their contractors; Administrative/Operational Use; 10 JAN 1946. Other requests shall be referred to Office of Scientific Research and Development, Washington, DC 20301. Document partially illegible.**
AUTHORITY
SOD memo dtd 2 Aug 1960

THIS PAGE IS UNCLASSIFIED

Reproduced by

AIR DOCUMENTS DIVISION

TECHNICAL INTELLIGENCE

AMC

HEADQUARTERS AIR MATERIEL COMMAND

WRIGHT FIELD, DAYTON, OHIO

Reproduced by

The U.S. GOVERNMENT

IS ABSOLVED

FROM ANY LITIGATION WHICH MAY ENSUE FROM THE CONTRACTORS IN-FRINGING ON THE FOREIGN PATENT RIGHTS WHICH MAY BE INVOLVED.

SAFETY FILM

REEL – C

958

A.T.I.

24500

122.112

X-BAND SEA-RETURN MEASUREMENTS

REPORT
870

RADIATION LABORATORY
MASSACHUSETTS INSTITUTE OF TECHNOLOGY
CAMBRIDGE - MASSACHUSETTS

NDRC
Div. 14
OEMsr-262

Radiation Laboratory

Report 870 January 10, 1946

X-BAND SEA-RETURN MEASUREMENTS

Abstract

Measurements with an X-band system show that sea return follows a law between an inverse square and inverse cube with range, and between zero and the first power with pulse duration, tending toward the former set of conditions with shorter range, steeper incidence, and longer pulses. Sea return in surface radar follows closely the latter limits; the return for high-angle radar-controlled missiles approaches the former. The maximum difference in sea return between vertical and horizontal polarization is approximately 10 db, with about the same maximum difference for different headings. Vertical polarization and upwind headings give the greatest return. At an incidence of 45° an increase in roughness of the sea corresponding to a change of surface wind velocity from 1 to 10 knots increases sea return by 30 db, with an even greater change at more slanting incidence. For a change of incidence from 1° above the horizontal to vertical, return from a Beaufort 3 sea (a few whitecaps) at a constant value of range varies by as much as 70 db, the return for different roughness of sea, headings, polarizations, and pulse durations approaching the same value as the incidence nears the vertical.

E. W. Cowan

Approved by:

C. M. Lyman
Leader, Group 91

Milton B. White
Head, Division 9

Title Page
9 Numbered Pages
11 Pages of Figures

X-BAND SEA-RETURN MEASUREMENTS

Radar reflections from the roughened surface of the sea result in a signal whose variation with range, pulse duration, and beam angle is readily approximated by theoretical predictions. The measurements described in this report are to substantiate these predictions as far as possible and further to provide sufficient empirical data concerning the variation of sea return with angle of incidence, roughness of sea, heading, and polarization, i.e., variables to which sea return is not easily related by theory, to allow the approximate prediction of X-band sea return under practical conditions. Measurements of ship and airplane target return are included for direct comparison.

a. Theoretical Predictions.

The received voltage from sea return is the resultant of the addition of the many tiny pulses returned from each of the wavelets that presents a scattering point on the sea, each pulse of r-f voltage being added in a phase determined by its distance from the radar system. Since the number of scattering points is usually very large and the relative distances random, the following statistical prediction can be made about the power returned: The average received power will be proportional to the number of scattering points and to the power density of the field incident on the points.[1]

To determine the approximate manner in which these two factors vary with range, pulse duration, and beam angle, it is convenient to consider the two separate cases shown in Fig. 1. The symbols used are defined in the figure. An expression for the power returned by the sea at a given range (averaged over a large number of sweeps so that a statistical prediction can be made) is obtained in each case by multiplying the power received from one scattering point by the number of points whose return adds to the power at the given point on the range sweep. The received power contributed by each scattering point is assumed to be the same. This in turn assumes that the antenna transmits and receives uniformly over a definite angle but not outside of that angle and also that the return is not affected by the small differences in range or incidence to scattering points in the narrow strip that contributes overlapping pulses.

In Case I the number of scattering points involved is dependent on the pulse duration, since only part of the returned pulses (within the range increment $\delta c/2$) overlap and contribute to the received

---

[1] For theoretical justification see RL Report 43-24, page 8.

power at a given time. For this case the sea return is proportional to the pulse duration, the horizontal beam angle, and the inverse cube of the range but is independent of the vertical beam angle. In Case II the return pulses from all of the scattering points in the beam overlap, and the sea return is proportional to the horizontal beam angle, the vertical beam angle, and the inverse square of the range but is independent of the pulse duration. Since actually the beam is not concentrated within definite angles, there is no sharp dividing line between the two cases, and the sea return obeys laws between those described above, tending toward those for Case II with shorter range, steeper incidence, narrower vertical beam angle, and longer pulses.

b. Variation with Range and Pulse Duration.

Experimental verification of the laws of variation with range is shown in Figs. 2, 3, 4, and 5 for the antenna beam above the horizontal 5°, 30°, 60°, and 90°, respectively. Logarithmic scales are used for both power and range. At 90° or vertical incidence, Case II applies entirely, and an excellent check of the inverse-square law is shown. This check was confirmed over a wider range in the measurements of altitude return described in RL Report 706. All of the rest of the curves lie between an inverse-square and inverse-cube law. A check of the inverse-cube relation is shown at long ranges where Case I definitely applies. The curves for steeper angles show the trend from the inverse-cube to the inverse-square law with decreasing range.

In Fig. 2, which shows the results for shallow incidence, the upper of the two curves shows a tendency to bend toward an inverse-square law at a very much longer range than would be predicted by the calculated dividing line between the two cases using any reasonable value of α. Since this unpredicted bend is present in only one of the two curves, it may well be attributed to a changing of the roughness of the sea viewed by the radar as the airplane flew along.

Because small changes in the roughness of the sea and other supposedly constant factors can produce very appreciable changes in sea return compared with those caused by the changes in range, the variable whose effect is being separated, at least two runs were made for each angle of incidence. The results of the different runs have been either plotted separately or averaged together to give some indication as to which of the bends in the curves are significant. Further discussion of the methods used in taking the data and of the accuracy of the data are in the appendix with a description of the radar system and test equipment used.

Curves in Fig. 6 confirm over a limited range the prediction that the return is proportional to pulse duration for Case I and

independent for Case II. Although the pulse duration can be changed rapidly enough to eliminate troubles from variation of other factors, it is difficult to make an estimate of the height of the sea-return pulses, especially for shallow incidence, that is reproducible within less than 1 or 2 db. All of the experimental values of sea return given in this report are the estimated power level exceeded by 5 percent of the sea return pulses at a given range. This level is three times the average power of the sea return at that range.[2]

c. Variation with Angle of Incidence, Roughness of Sea, Heading, and Polarization.

Formulas for sea return for both of the cases discussed in part a contain the factor $n\sigma_0$, which is the effective scattering cross section as a function of θ of a unit of area on the ocean. This factor varies with roughness of sea, heading, and polarization as well as angle of incidence. The data that are plotted in Figs. 7, 8, and 9 were taken with a constant range and pulse duration (8,000 feet and 1/2 μsec) to show the variation of sea return with incidence from 1° to 90° for three different sea conditions. Each set of measurements was made with three directions with respect to the wind, and all measurements were made with both horizontal and vertical polarization. A range of received power from sea return of nearly 100 db is shown by the results.

A maximum difference of about 10 db between vertical and horizontal polarization under the various conditions (excluding very calm seas) is shown; the return for vertical polarization is always equal to or greater than that for horizontal polarization. About a 10-db maximum difference for different headings with respect to the wind is also shown, with upwind headings giving in general the largest return, downwind headings the smallest, and crosswind headings an intermediate value. For calm seas the headings were selected with respect to the swells rather than the surface wind. The direction of the swells seemed to be more important in determining the amount of sea return than the direction of movement of the small wavelets, and under these conditions the return for either direction perpendicular to the swells was nearly identical, with considerably less return along the swells.

A comparison between the variations of sea return with incidence for different roughness of sea is made in Fig. 10. For an increase in the roughness of the sea corresponding to a surface wind change from 1 to 10 knots, sea return at an incidence of 45° changes by 30 db, with even greater changes at more slanting incidence.

2 See RL Report 454 for probability distribution of sea-return pulses.

As the incidence nears the vertical, the sea return under different conditions of polarization, heading, and roughness of sea approaches the same value. At vertical incidence the distinction between different polarizations and headings is lost, and within the accuracy of the measurements, the return is also independent of the roughness of the sea. Although no measurements were made for seas rougher than a Beaufort 3[3] (scattered whitecaps) in this series of tests, confirmation of this last fact for rougher seas is found in the measurements of altitude return reported in RL Report 706.

Reference to the formulas and diagrams in Fig. 1 shows that the number of scattering points as well as σ_s varies with θ and affects the shape of the curves in Figs. 7 through 10. However, with the 1/2-μsec pulses and 8,000-foot range used, the number of points contributing to the sea return varies by only a factor of about four[4] with a 90° change of incidence; the number rises to a maximum near the vertical. An attempt to check the effect of the variation of the number of contributing scattering points was made by plotting in Fig. 11 the variation with incidence under the above conditions and the variation with 2-μsec pulses at 4,000-foot range. The variation with 2-μsec pulses gives a change in the number of scattering points by a factor of two in the opposite direction with the maximum near the horizontal. In terms of the decibels change in power, however, these variations are both slow and relatively small so that any change in the shape of the curves from this cause seems to have been largely hidden by changes in the roughness of the sea. Furthermore, since the variation of sea return with angle is slow even near the vertical compared to that of the antenna pattern (justifying the assumption that the angle to all contributing scattering points is the same), the curves in Figs. 7 through 11 are approximately the variation of σ_a.

Because of the complex shape of the surface of the sea, the assumption of n identical, randomly spaced scattering points is probably an oversimplification if the complicated problem of explaining theoretically the variation with incidence is to be attempted. Waves on a Beaufort 3 sea consist of a long swell (wavelength of the order of tens of feet), upon which shorter choppy wavelets (wavelength a few feet) run with the direction of the wind, covered in turn by fine wrinkles (wavelength a fraction of an inch) running in all directions. If σ_a is assumed to be the variation of an "average" scattering point, the number n becomes a function of incidence, decreasing as some of the wavelets are hidden in the shadow of the swells at shallow incidence. Also the assumption of entirely random phase may not be correct near vertical incidence so that the pattern of a group of scattering points is no longer that of a single point. This may help explain the large increase in return near vertical incidence, an increase that might be unexpected from the shape of a single scattering point.

With the above reservations in mind, a value of $n\sigma_s$, the effective scattering area per unit area of ocean, can be obtained from the curves in Figs. 7 through 10 by taking the antilogarithm of the algebraic sum of 8.22 and one-tenth the value of the abscissa. A correction factor of 4 (cos θ) to correct for the change in the number of contributing scattering points may be multiplied times the result when Case I applies (dividing line at 75°). However, the effect of this correction is of the same order as the experimental scatter in the points, and the effect of the corresponding correction for Case II is entirely negligible. The calculated value of $n\sigma_s$ for a Beaufort 3 sea viewed upwind with horizontal polarization at 15° from the horizontal is about 3×10^{-4}, with a value at vertical incidence of 80. At vertical incidence then the ocean as viewed by the radar is equivalent to a group of flat horizontal metal plates 6 inches square, spaced 1 foot between centers, and with sufficient vertical displacement to give return in random phase as viewed from above.

d. Pulse-to-Pulse Variation.

Photographs of the variation of sea return with time on successive range sweeps for four values of incidence are shown on the following sheet. A complete set of such photographs were made at 15-degree intervals of incidence for two different headings and polarizations, but since the number of sweeps shown is too small for statistical analysis, only a representative few have been included to show the change in shape of sea return with different incidence. As might be expected, the pulse-to-pulse variation is much less near the vertical, where the radial velocity components are small. Near the horizontal the variation probably is largely determined by the speed of the airplane and whether or not the beam is exactly on the ground track.

The large variation of the peak height of the sea-return block when the incidence is steep suggests that a micoil might be controlled by the decrease in percentage variation of the sea return block when a target pulse of much smaller and slower variation is included with it. Although the return from several pulses must be examined to determine if for a given maximum pulse height a target pulse is increasing the minimum height, necessitating a slower scan, this method might allow control when the target pulse is equal to or smaller than the sea-return pulse.

3 See appendix for Beaufort scale.

4 Calculated on the assumption that all of the energy in the antenna beam is confined to the solid angle $4\pi/G$.

(a) Beam 1° from horizontal. Pulses left to right: transmitted, sea return, signal generator (peak corresponds to received signal 144.9 db below peak power output).

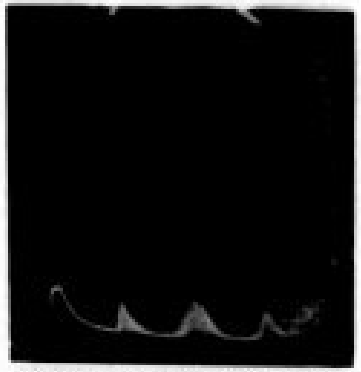

(b) Beam 30° from horizontal. Pulses: transmitted, altitude return, sea return, signal generator (peak corresponds to received signal 133.9 db below peak power output).

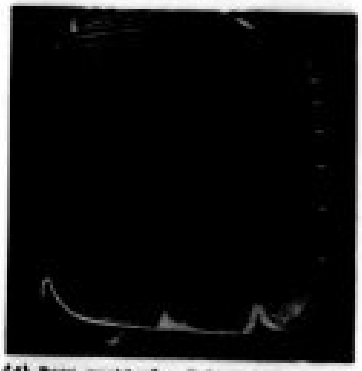

(d) Beam vertical. Pulses left to right: transmitted, sea return, signal generator (peak corresponds to received signal 62.9 db below peak power output).

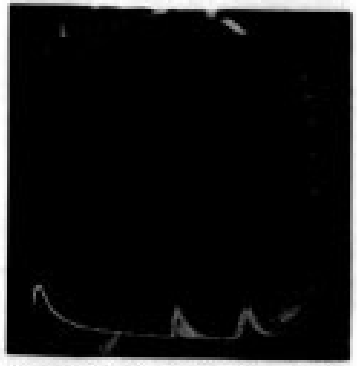

(e) Beam 60° from horizontal. Pulses left to right: transmitted, sea return, signal generator (peak corresponds to received signal 115.7 db below peak power output).

Horizontal polarization, surface wind 1 or 2 knots, heading upwind, pulse duration 1 μsec, repetition rate 1000 cps, range 8000 feet, transmitted power 6.5 kw, total sweep length 40 μsec, airspeed 140 mph, beam approximately on ground track.

e. Comparison of Target and Sea Return.

Measurements of return from both a ship and airplane target were made with the same system used for the sea-return measurements. A direct comparison may, therefore, be made. The return from an SNB airplane, stern aspect, is plotted versus range in Fig. 12, resulting in approximately an inverse-fourth-power curve. Similar curves are drawn in Fig. 13 for a 10,000-ton Liberty freighter target viewed broadside at various angles from the horizontal.

For search-type radar, Case I nearly always applies, so in Fig. 14 an inverse-cube-law line is drawn to show the approximate sea return at an incidence of 5° for the sea under the conditions indicated in the figure. Conditions not directly affecting the sea return under the case being considered have been purposely omitted from this and the following figure, but may be obtained from previous figures if desired. Inverse-fourth-power curves are drawn to show the ship and airplane target return. The effect of a change in any of the conditions on the range at which sea return equals target return is easily shown by moving the sea-return curve parallel to its present position. For instance, the curve should be raised 3 db each time the horizontal beam angle or pulse duration are doubled and may be raised or lowered the correct amount for changes in polarization, incidence, or heading, by referring to the curves in Figs. 7 through 11. From the viewpoint of the best ratio between target and sea return when Case I applies, a radar system should have horizontal polarization, short pulses, and a narrow horizontal beam angle.

High-angle, radar-controlled missiles (and narrow-beam aircraft-interception systems under some conditions) will fall under Case II. For this case an inverse-square-law curve is drawn in Fig. 14 and may be moved parallel to its position for comparison under different conditions with the curve for return from the ship target. If the vertical beam angle is narrow or the incidence far enough from vertical that the return from straight down does not contribute much to the total, doubling either beam angle increases the sea return 3 db. Because of the fairly rapid increase of σ_0 near the vertical, with a broad beam the energy reaching the scattering points directly below the airplane may become the important factor rather than the total number of points. Increasing either the vertical beam angle or the incidence under these conditions, increases the sea return by about the same amount as the increase in power at the point on the two-way antenna pattern corresponding to the vertical direction. For best ratio between target and sea return when Case II applies, a radar system should have a narrow pencil beam; and polarization, pulse duration, roughness of sea, and heading will have a relatively small effect near vertical incidence.

APPENDIX

An APS-6A radar system, using a Type 725A magnetron operating at 9425 Mcps, was used in all of the tests. The duty cycle was 1/1,000 for pulse durations of 1/2, 1, and 2 μsec. A magnetron showing a good spectrum at low power output was used for the tests. Receiver sensitivity was -120 dbw; receiver i-f bandwidth about 2.5 Mcps. The antenna was a 17-inch parabola with a circular opening and a Cutler feed, having an absolute power gain of 29.5 db, beam angle in E plane of 5.3°, and beam angle in H plane of 5.5° (to 3-db points in one-way pattern).

Sea-return measurements were made by adjusting the output of a TS-146 test set (Serial No. 13) until about 5 percent of the sea-return pulses at the selected range exceeded the height of the signal-generator pulse as viewed on a synchroscope.

The range of the calibrated attenuator on the test set was extended by the test-equipment group, who also checked the calibration of the set, cable, and directional coupler after the completion of the tests. For incidences near the vertical, the sea return exceeded even the extended range of calibration of the test set. Additional attenuation was then placed in the r-f line to the antenna by passing the energy through a directional coupler to a sand load and then connecting the 20-db tap of the coupler to the antenna. When this power divider was inserted, the sea return reaching the receiver was decreased by 48 db, a figure obtained by taking the difference between the test set readings with the attenuator in and then out, for a signal that would allow such an overlap of readings.

The absolute accuracy of the measurements depends on the calibration of the following parts of the r-f system: test set (calibration curve supplied by F. Banks of test group), test-set cable (10 db), coupler (20.9 db), wave guide from coupler to antenna (0.6 db), antenna gain (29.5 db), and plexiglass radome (0.5 db). A check on the over-all accuracy can be made by assuming that for vertical incidence the sea is equivalent to a perfect mirror. This seems moderately reasonable since the rapid change of σ_0 near the vertical and the independence of the return of roughness of sea at vertical incidence seem to indicate that the fraction of the energy scattered must be fairly small, although this does not assure that the maximum possible return is close to the three-times-average level recorded. Calculation using the above assumption gives a ratio of transmitted to received power at 8,000 feet for vertical incidence of 63.6 db compared with a measured value (average of 3 flights) of 63.3 db, an accidently close check even if the assumption were correct.

Relative accuracy of the measuring equipment was better than the

reproducibility of the estimated height of the sea return, which was of the order of several decibels for slanting incidence. Measurements of angle were made with a combined level and protractor accurate to less than a degree. Measurements of range were made on the P4E synchroscope, the calibration of which was checked with temperature-corrected altimeter readings.

By far the largest errors were introduced by seemingly insignificant changes in the roughness of the sea in front of the airplane, and difficulty in establishing an accurate scale to measure the roughness. Waves on a moderate sea consist of a long swell upon; which shorter choppy wavelets run, covered in turn by fine wrinkles. Since the directions in which these various waves appear to run is not necessarily the same, the difficulty in establishing a standard scale is apparent, even if accurate measurement of the surface wind or the height of the waves were possible. For fairly calm seas, headings were selected with respect to the swell rather than the less consistent chop that appears to follow the direction of the wind. Because of the above difficulties, the averaging of a large amount of data is probably more important than either the absolute or relative accuracy of the test equipment.

Beaufort Scale

Beaufort Number	Description of Sea	Surface Wind
0	Sea like a mirror.	Less than 1 knot
1	Ripples with the appearance of scales are formed but without foam crests.	1 - 3 knots
2	Small wavelets, still short but more pronounced; crests have a glassy appearance and do not break.	4 - 6 knots
3	Large wavelets. Crests begin to break. Foam of glassy appearance. Perhaps scattered white caps.	7 - 10 knots
4	Small waves, becoming longer; fairly frequent white caps.	11 - 16 knots
5	Moderate waves; taking a more pronounced long form; many white caps are formed. Chance of some spray.	17 - 21 knots
6	Large waves begin to form; the white foam crests are more extensive everywhere. Probably some spray.	22 - 27 knots

E. W. Cowan
August 14, 1945

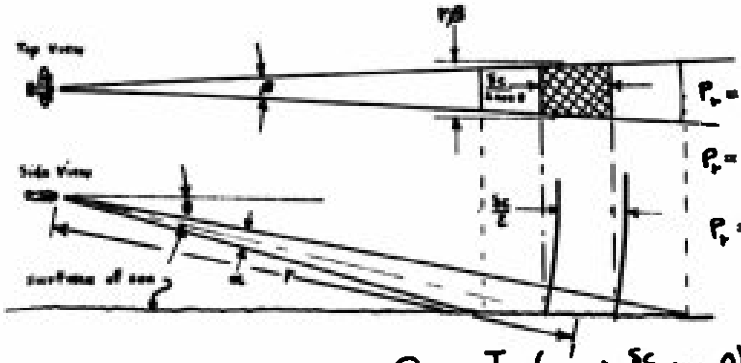

P_r = (rec. pwr. /scatter)(nos. of scatters)

$$P_r = \left(\frac{P_t G A \sigma_0}{(4\pi r^2)^2}\right)\left(n \cdot r\beta \cdot \frac{\delta c}{2\cos\theta}\right)$$

$$P_r = \frac{P_t G A \sigma_0 n \beta \delta c}{(4\pi)^2 r^3 2 \cos\theta}$$

Case I $\left(r\alpha > \frac{\delta c}{2}\tan\theta\right)$

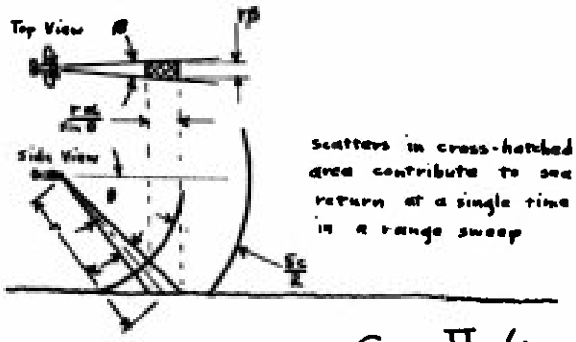

P_r = (rec. pwr. /scatter)(nos. of scatters)

$$P_r = \left(\frac{P_t G A \sigma_0}{(4\pi r^2)^2}\right)\left(n \cdot r\beta \cdot \frac{r\alpha}{\sin\theta}\right)$$

$$P_r = \frac{P_t G A \sigma_0 n \beta \alpha}{(4\pi)^2 r^2 \sin\theta}$$

Case II $\left(r\alpha < \frac{\delta c}{2}\tan\theta\right)$

Definitions of symbols not indicated on diagram;

P_t = transmitted power
G = gain of transmitting antenna over point source
δ = pulse duration
n = speed of light
A = absorption cross section of receiving antenna
P_r = power received from sea return at a given range averaged over a large number of range sweeps
σ_0 = effective cross section of each scatter as a function of θ
n = average number of scatters on a unit area of the sea

FIG. I. Two cases in the theoretical prediction of sea return.

Fig. 2 Variation of Sea Return with Range

Fig. 3 Variation of Sea Return with Range

Fig. 4. Variation of Sea Reflection with Range

KODAK SAFETY FILM

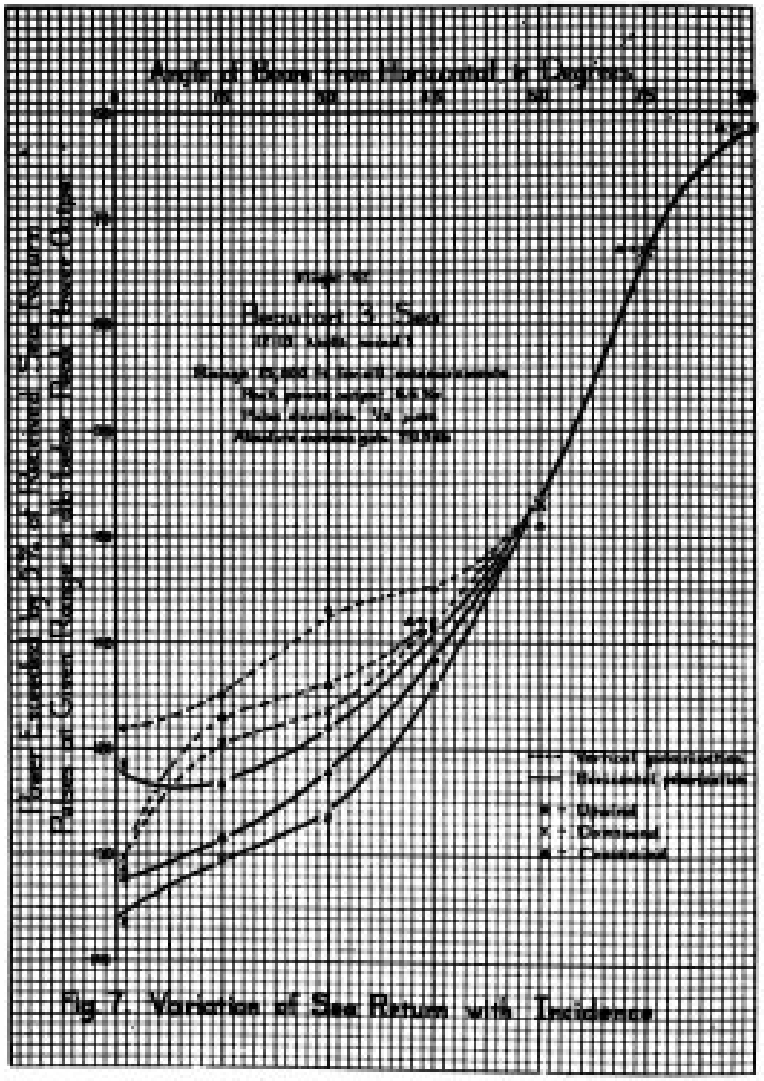

Fig. 7. Variation of Sea Return with Incidence

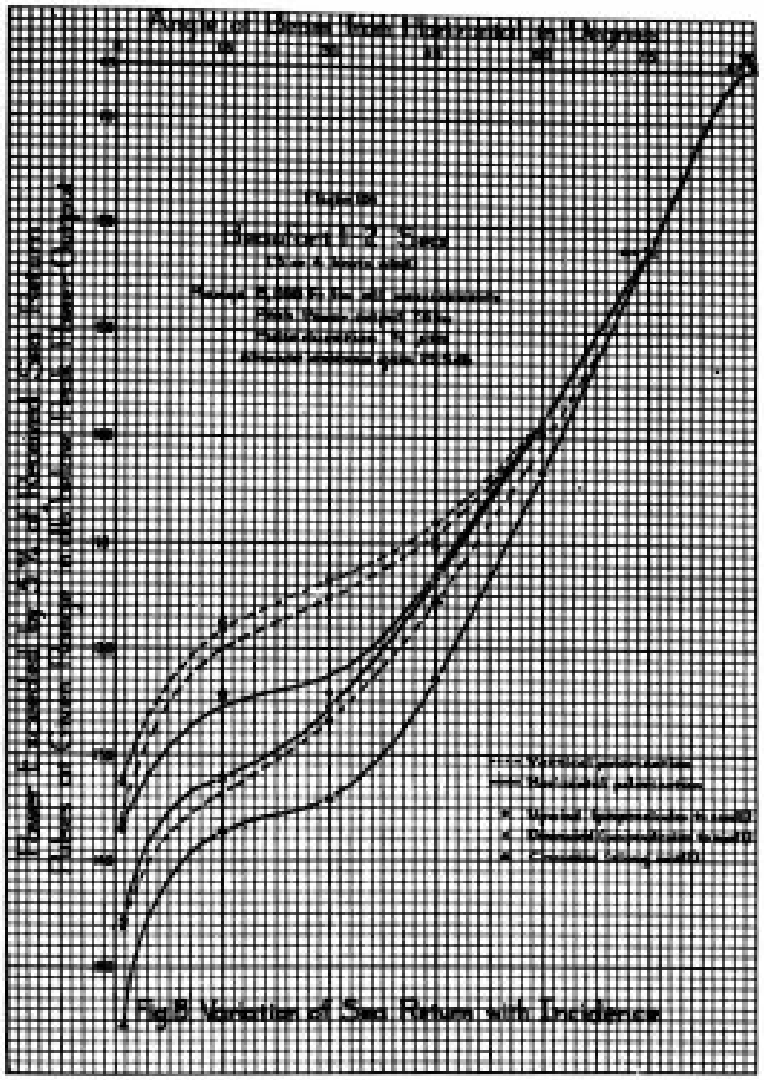

Fig. 8 Variation of Sea Return with Incidence

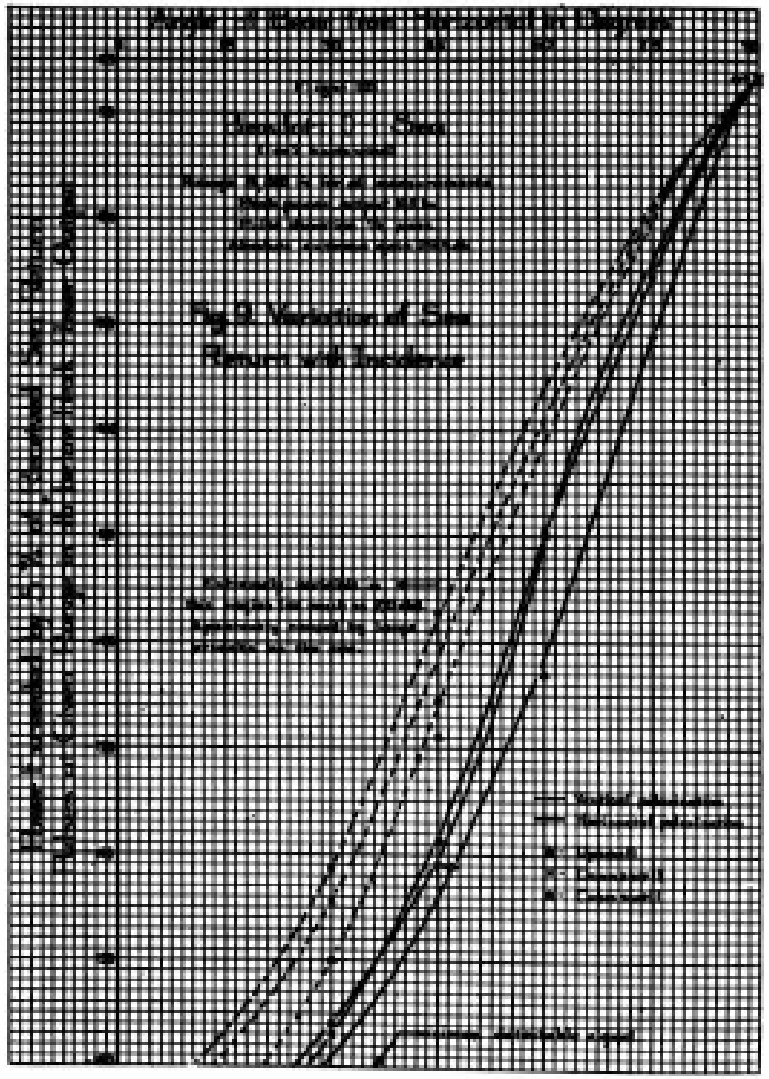
Fig 9 Variation of Sea
Return with Incidence

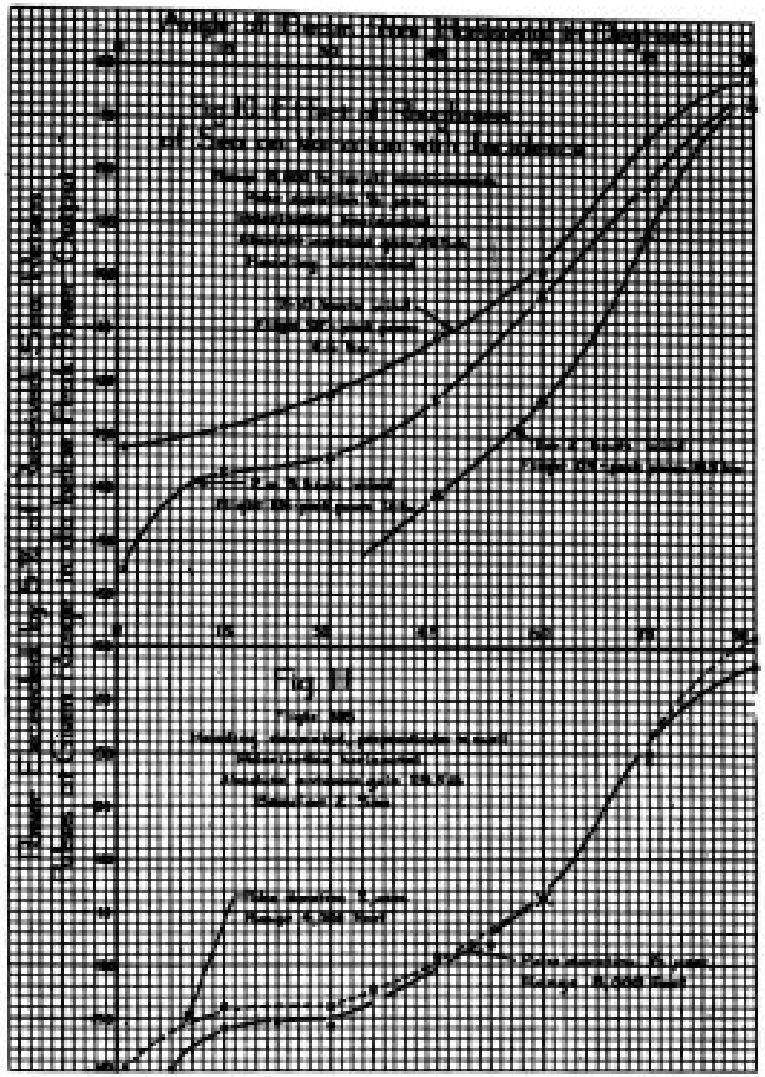
Fig 10 Effect of Roughness
of Sea on Variation with Incidence
Fig 11

KODAK SAFETY FILM

SAFETY FILM

REEL – C

958

A.T.I.

24500

Reproduced by

AIR DOCUMENTS DIVISION

TECHNICAL INTELLIGENCE

AMC

HEADQUARTERS AIR MATERIEL COMMAND

WRIGHT FIELD, DAYTON, OHIO

Reproduced by

The U.S. GOVERNMENT

IS ABSOLVED

FROM ANY LITIGATION WHICH MAY ENSUE FROM THE CONTRACTORS IN-FRINGING ON THE FOREIGN PATENT RIGHTS WHICH MAY BE INVOLVED.

SAFETY FILM

REEL – C

958

A.T.I.

24500

122.112

X-BAND SEA-RETURN MEASUREMENTS

REPORT
870

RADIATION LABORATORY
MASSACHUSETTS INSTITUTE OF TECHNOLOGY
CAMBRIDGE - MASSACHUSETTS

NDRC
Div. 14
OEMsr-262

Radiation Laboratory

Report 870 January 10, 1946

X-BAND SEA-RETURN MEASUREMENTS

Abstract

Measurements with an X-band system show that sea return follows a law between an inverse square and inverse cube with range, and between zero and the first power with pulse duration, tending toward the former set of conditions with shorter range, steeper incidence, and longer pulses. Sea return in surface radar follows closely the latter limits; the return for high-angle radar-controlled missiles approaches the former. The maximum difference in sea return between vertical and horizontal polarization is approximately 10 db, with about the same maximum difference for different headings. Vertical polarization and upwind headings give the greatest return. At an incidence of 45° an increase in roughness of the sea corresponding to a change of surface wind velocity from 1 to 10 knots increases sea return by 30 db, with an even greater change at more slanting incidence. For a change of incidence from 1° above the horizontal to vertical, return from a Beaufort 3 sea (a few whitecaps) at a constant value of range varies by as much as 70 db, the return for different roughness of sea, headings, polarizations, and pulse durations approaching the same value as the incidence nears the vertical.

E. W. Cowan

Approved by:

C. M. Lyman
Leader, Group 91

Milton B. White
Head, Division 9

Title Page
9 Numbered Pages
11 Pages of Figures

X-BAND SEA-RETURN MEASUREMENTS

Radar reflections from the roughened surface of the sea result in a signal whose variation with range, pulse duration, and beam angle is readily approximated by theoretical predictions. The measurements described in this report are to substantiate these predictions as far as possible and further to provide sufficient empirical data concerning the variation of sea return with angle of incidence, roughness of sea, heading, and polarization, i.e., variables to which sea return is not easily related by theory, to allow the approximate prediction of X-band sea return under practical conditions. Measurements of ship and airplane target return are included for direct comparison.

a. Theoretical Predictions.

The received voltage from sea return is the resultant of the addition of the many tiny pulses returned from each of the wavelets that presents a scattering point on the sea, each pulse of r-f voltage being added in a phase determined by its distance from the radar system. Since the number of scattering points is usually very large and the relative distances random, the following statistical prediction can be made about the power returned: The average received power will be proportional to the number of scattering points and to the power density of the field incident on the points.[1]

To determine the approximate manner in which these two factors vary with range, pulse duration, and beam angle, it is convenient to consider the two separate cases shown in Fig. 1. The symbols used are defined in the figure. An expression for the power returned by the sea at a given range (averaged over a large number of sweeps so that a statistical prediction can be made) is obtained in each case by multiplying the power received from one scattering point by the number of points whose return adds to the power at the given point on the range sweep. The received power contributed by each scattering point is assumed to be the same. This in turn assumes that the antenna transmits and receives uniformly over a definite angle but not outside of that angle and also that the return is not affected by the small differences in range or incidence to scattering points in the narrow strip that contributes overlapping pulses.

In Case I the number of scattering points involved is dependent on the pulse duration, since only part of the returned pulses (within the range increment $\delta c/2$) overlap and contribute to the received

---

[1] For theoretical justification see RL Report 43-24, page 8.

power at a given time. For this case the sea return is proportional to the pulse duration, the horizontal beam angle, and the inverse cube of the range but is independent of the vertical beam angle. In Case II the return pulses from all of the scattering points in the beam overlap, and the sea return is proportional to the horizontal beam angle, the vertical beam angle, and the inverse square of the range but is independent of the pulse duration. Since actually the beam is not concentrated within definite angles, there is no sharp dividing line between the two cases, and the sea return obeys laws between those described above, tending toward those for Case II with shorter range, steeper incidence, narrower vertical beam angle, and longer pulses.

b. Variation with Range and Pulse Duration.

Experimental verification of the laws of variation with range is shown in Figs. 2, 3, 4, and 5 for the antenna beam above the horizontal 5°, 30°, 60°, and 90°, respectively. Logarithmic scales are used for both power and range. At 90° or vertical incidence, Case II applies entirely, and an excellent check of the inverse-square law is shown. This check was confirmed over a wider range in the measurements of altitude return described in RL Report 706. All of the rest of the curves lie between an inverse-square and inverse-cube law. A check of the inverse-cube relation is shown at long ranges where Case I definitely applies. The curves for steeper angles show the trend from the inverse-cube to the inverse-square law with decreasing range.

In Fig. 2, which shows the results for shallow incidence, the upper of the two curves shows a tendency to bend toward an inverse-square law at a very much longer range than would be predicted by the calculated dividing line between the two cases using any reasonable value of α. Since this unpredicted bend is present in only one of the two curves, it may well be attributed to a changing of the roughness of the sea viewed by the radar as the airplane flew along.

Because small changes in the roughness of the sea and other supposedly constant factors can produce very appreciable changes in sea return compared with those caused by the changes in range, the variable whose effect is being separated, at least two runs were made for each angle of incidence. The results of the different runs have been either plotted separately or averaged together to give some indication as to which of the bends in the curves are significant. Further discussion of the methods used in taking the data and of the accuracy of the data are in the appendix with a description of the radar system and test equipment used.

Curves in Fig. 6 confirm over a limited range the prediction that the return is proportional to pulse duration for Case I and

independent for Case II. Although the pulse duration can be changed rapidly enough to eliminate troubles from variation of other factors, it is difficult to make an estimate of the height of the sea-return pulses, especially for shallow incidence, that is reproducible within less than 1 or 2 db. All of the experimental values of sea return given in this report are the estimated power level exceeded by 5 percent of the sea return pulses at a given range. This level is three times the average power of the sea return at that range.[2]

c. Variation with Angle of Incidence, Roughness of Sea, Heading, and Polarization.

Formulas for sea return for both of the cases discussed in part a contain the factor $n\sigma_0$, which is the effective scattering cross section as a function of θ of a unit of area on the ocean. This factor varies with roughness of sea, heading, and polarization as well as angle of incidence. The data that are plotted in Figs. 7, 8, and 9 were taken with a constant range and pulse duration (8,000 feet and 1/2 μsec) to show the variation of sea return with incidence from 1° to 90° for three different sea conditions. Each set of measurements was made with three directions with respect to the wind, and all measurements were made with both horizontal and vertical polarization. A range of received power from sea return of nearly 100 db is shown by the results.

A maximum difference of about 10 db between vertical and horizontal polarization under the various conditions (excluding very calm seas) is shown; the return for vertical polarization is always equal to or greater than that for horizontal polarization. About a 10-db maximum difference for different headings with respect to the wind is also shown, with upwind headings giving in general the largest return, downwind headings the smallest, and crosswind headings an intermediate value. For calm seas the headings were selected with respect to the swells rather than the surface wind. The direction of the swells seemed to be more important in determining the amount of sea return than the direction of movement of the small wavelets, and under these conditions the return for either direction perpendicular to the swells was nearly identical, with considerably less return along the swells.

A comparison between the variations of sea return with incidence for different roughness of sea is made in Fig. 10. For an increase in the roughness of the sea corresponding to a surface wind change from 1 to 10 knots, sea return at an incidence of 45° changes by 30 db, with even greater changes at more slanting incidence.

2 See RL Report 454 for probability distribution of sea-return pulses.

As the incidence nears the vertical, the sea return under different conditions of polarization, heading, and roughness of sea approaches the same value. At vertical incidence the distinction between different polarizations and headings is lost, and within the accuracy of the measurements, the return is also independent of the roughness of the sea. Although no measurements were made for seas rougher than a Beaufort 3[3] (scattered whitecaps) in this series of tests, confirmation of this last fact for rougher seas is found in the measurements of altitude return reported in RL Report 706.

Reference to the formulas and diagrams in Fig. 1 shows that the number of scattering points as well as σ_s varies with θ and affects the shape of the curves in Figs. 7 through 10. However, with the 1/2-μsec pulses and 8,000-foot range used, the number of points contributing to the sea return varies by only a factor of about four[4] with a 90° change of incidence; the number rises to a maximum near the vertical. An attempt to check the effect of the variation of the number of contributing scattering points was made by plotting in Fig. 11 the variation with incidence under the above conditions and the variation with 2-μsec pulses at 4,000-foot range. The variation with 2-μsec pulses gives a change in the number of scattering points by a factor of two in the opposite direction with the maximum near the horizontal. In terms of the decibels change in power, however, these variations are both slow and relatively small so that any change in the shape of the curves from this cause seems to have been largely hidden by changes in the roughness of the sea. Furthermore, since the variation of sea return with angle is slow even near the vertical compared to that of the antenna pattern (justifying the assumption that the angle to all contributing scattering points is the same), the curves in Figs. 7 through 11 are approximately the variation of σ_a.

Because of the complex shape of the surface of the sea, the assumption of n identical, randomly spaced scattering points is probably an oversimplification if the complicated problem of explaining theoretically the variation with incidence is to be attempted. Waves on a Beaufort 3 sea consist of a long swell (wavelength of the order of tens of feet), upon which shorter choppy wavelets (wavelength a few feet) run with the direction of the wind, covered in turn by fine wrinkles (wavelength a fraction of an inch) running in all directions. If σ_a is assumed to be the variation of an "average" scattering point, the number n becomes a function of incidence, decreasing as some of the wavelets are hidden in the shadow of the swells at shallow incidence. Also the assumption of entirely random phase may not be correct near vertical incidence so that the pattern of a group of scattering points is no longer that of a single point. This may help explain the large increase in return near vertical incidence, an increase that might be unexpected from the shape of a single scattering point.

With the above reservations in mind, a value of $n\sigma_s$, the effective scattering area per unit area of ocean, can be obtained from the curves in Figs. 7 through 10 by taking the antilogarithm of the algebraic sum of 8.22 and one-tenth the value of the abscissa. A correction factor of 4 (cos θ) to correct for the change in the number of contributing scattering points may be multiplied times the result when Case I applies (dividing line at 75°). However, the effect of this correction is of the same order as the experimental scatter in the points, and the effect of the corresponding correction for Case II is entirely negligible. The calculated value of $n\sigma_s$ for a Beaufort 3 sea viewed upwind with horizontal polarization at 15° from the horizontal is about 3×10^{-4}, with a value at vertical incidence of 80. At vertical incidence then the ocean as viewed by the radar is equivalent to a group of flat horizontal metal plates 6 inches square, spaced 1 foot between centers, and with sufficient vertical displacement to give return in random phase as viewed from above.

d. Pulse-to-Pulse Variation.

Photographs of the variation of sea return with time on successive range sweeps for four values of incidence are shown on the following sheet. A complete set of such photographs were made at 15-degree intervals of incidence for two different headings and polarizations, but since the number of sweeps shown is too small for statistical analysis, only a representative few have been included to show the change in shape of sea return with different incidence. As might be expected, the pulse-to-pulse variation is much less near the vertical, where the radial velocity components are small. Near the horizontal the variation probably is largely determined by the speed of the airplane and whether or not the beam is exactly on the ground track.

The large variation of the peak height of the sea-return block when the incidence is steep suggests that a micoil might be controlled by the decrease in percentage variation of the sea return block when a target pulse of much smaller and slower variation is included with it. Although the return from several pulses must be examined to determine if for a given maximum pulse height a target pulse is increasing the minimum height, necessitating a slower scan, this method might allow control when the target pulse is equal to or smaller than the sea-return pulse.

3 See appendix for Beaufort scale.

4 Calculated on the assumption that all of the energy in the antenna beam is confined to the solid angle $4\pi/G$.

(a) Beam 1° from horizontal. Pulses left to right: transmitted, sea return, signal generator (peak corresponds to received signal 144.9 db below peak power output).

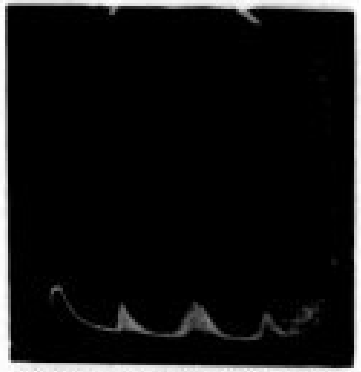

(b) Beam 30° from horizontal. Pulses: transmitted, altitude return, sea return, signal generator (peak corresponds to received signal 133.9 db below peak power output).

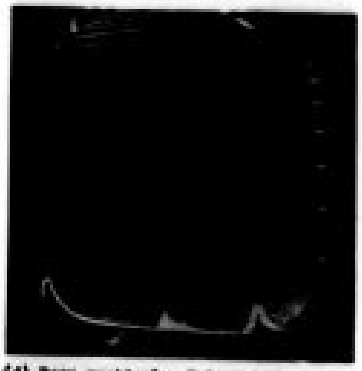

(d) Beam vertical. Pulses left to right: transmitted, sea return, signal generator (peak corresponds to received signal 62.9 db below peak power output).

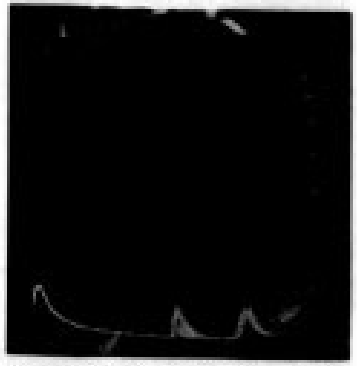

(e) Beam 60° from horizontal. Pulses left to right: transmitted, sea return, signal generator (peak corresponds to received signal 115.7 db below peak power output).

Horizontal polarization, surface wind 1 or 2 knots, heading upwind, pulse duration 1 μsec, repetition rate 1000 cps, range 8000 feet, transmitted power 6.5 kw, total sweep length 40 μsec, airspeed 140 mph, beam approximately on ground track.

e. Comparison of Target and Sea Return.

Measurements of return from both a ship and airplane target were made with the same system used for the sea-return measurements. A direct comparison may, therefore, be made. The return from an SNB airplane, stern aspect, is plotted versus range in Fig. 12, resulting in approximately an inverse-fourth-power curve. Similar curves are drawn in Fig. 13 for a 10,000-ton Liberty freighter target viewed broadside at various angles from the horizontal.

For search-type radar, Case I nearly always applies, so in Fig. 14 an inverse-cube-law line is drawn to show the approximate sea return at an incidence of 5° for the sea under the conditions indicated in the figure. Conditions not directly affecting the sea return under the case being considered have been purposely omitted from this and the following figure, but may be obtained from previous figures if desired. Inverse-fourth-power curves are drawn to show the ship and airplane target return. The effect of a change in any of the conditions on the range at which sea return equals target return is easily shown by moving the sea-return curve parallel to its present position. For instance, the curve should be raised 3 db each time the horizontal beam angle or pulse duration are doubled and may be raised or lowered the correct amount for changes in polarization, incidence, or heading, by referring to the curves in Figs. 7 through 11. From the viewpoint of the best ratio between target and sea return when Case I applies, a radar system should have horizontal polarization, short pulses, and a narrow horizontal beam angle.

High-angle, radar-controlled missiles (and narrow-beam aircraft-interception systems under some conditions) will fall under Case II. For this case an inverse-square-law curve is drawn in Fig. 14 and may be moved parallel to its position for comparison under different conditions with the curve for return from the ship target. If the vertical beam angle is narrow or the incidence far enough from vertical that the return from straight down does not contribute much to the total, doubling either beam angle increases the sea return 3 db. Because of the fairly rapid increase of σ_0 near the vertical, with a broad beam the energy reaching the scattering points directly below the airplane may become the important factor rather than the total number of points. Increasing either the vertical beam angle or the incidence under these conditions, increases the sea return by about the same amount as the increase in power at the point on the two-way antenna pattern corresponding to the vertical direction. For best ratio between target and sea return when Case II applies, a radar system should have a narrow pencil beam; and polarization, pulse duration, roughness of sea, and heading will have a relatively small effect near vertical incidence.

APPENDIX

An APS-6A radar system, using a Type 725A magnetron operating at 9425 Mcps, was used in all of the tests. The duty cycle was 1/1,000 for pulse durations of 1/2, 1, and 2 μsec. A magnetron showing a good spectrum at low power output was used for the tests. Receiver sensitivity was -120 dbw; receiver i-f bandwidth about 2.5 Mcps. The antenna was a 17-inch parabola with a circular opening and a Cutler feed, having an absolute power gain of 29.5 db, beam angle in E plane of 5.3°, and beam angle in H plane of 5.5° (to 3-db points in one-way pattern).

Sea-return measurements were made by adjusting the output of a TS-146 test set (Serial No. 13) until about 5 percent of the sea-return pulses at the selected range exceeded the height of the signal-generator pulse as viewed on a synchroscope.

The range of the calibrated attenuator on the test set was extended by the test-equipment group, who also checked the calibration of the set, cable, and directional coupler after the completion of the tests. For incidences near the vertical, the sea return exceeded even the extended range of calibration of the test set. Additional attenuation was then placed in the r-f line to the antenna by passing the energy through a directional coupler to a sand load and then connecting the 20-db tap of the coupler to the antenna. When this power divider was inserted, the sea return reaching the receiver was decreased by 48 db, a figure obtained by taking the difference between the test set readings with the attenuator in and then out, for a signal that would allow such an overlap of readings.

The absolute accuracy of the measurements depends on the calibration of the following parts of the r-f system: test set (calibration curve supplied by F. Banks of test group), test-set cable (10 db), coupler (20.9 db), wave guide from coupler to antenna (0.6 db), antenna gain (29.5 db), and plexiglass radome (0.5 db). A check on the over-all accuracy can be made by assuming that for vertical incidence the sea is equivalent to a perfect mirror. This seems moderately reasonable since the rapid change of σ_0 near the vertical and the independence of the return of roughness of sea at vertical incidence seem to indicate that the fraction of the energy scattered must be fairly small, although this does not assure that the maximum possible return is close to the three-times-average level recorded. Calculation using the above assumption gives a ratio of transmitted to received power at 8,000 feet for vertical incidence of 63.6 db compared with a measured value (average of 3 flights) of 63.3 db, an accidently close check even if the assumption were correct.

Relative accuracy of the measuring equipment was better than the

reproducibility of the estimated height of the sea return, which was of the order of several decibels for slanting incidence. Measurements of angle were made with a combined level and protractor accurate to less than a degree. Measurements of range were made on the P4E synchroscope, the calibration of which was checked with temperature-corrected altimeter readings.

By far the largest errors were introduced by seemingly insignificant changes in the roughness of the sea in front of the airplane, and difficulty in establishing an accurate scale to measure the roughness. Waves on a moderate sea consist of a long swell upon; which shorter choppy wavelets run, covered in turn by fine wrinkles. Since the directions in which these various waves appear to run is not necessarily the same, the difficulty in establishing a standard scale is apparent, even if accurate measurement of the surface wind or the height of the waves were possible. For fairly calm seas, headings were selected with respect to the swell rather than the less consistent chop that appears to follow the direction of the wind. Because of the above difficulties, the averaging of a large amount of data is probably more important than either the absolute or relative accuracy of the test equipment.

Beaufort Scale

Beaufort Number	Description of Sea	Surface Wind
0	Sea like a mirror.	Less than 1 knot
1	Ripples with the appearance of scales are formed but without foam crests.	1 - 3 knots
2	Small wavelets, still short but more pronounced; crests have a glassy appearance and do not break.	4 - 6 knots
3	Large wavelets. Crests begin to break. Foam of glassy appearance. Perhaps scattered white caps.	7 - 10 knots
4	Small waves, becoming longer; fairly frequent white caps.	11 - 16 knots
5	Moderate waves; taking a more pronounced long form; many white caps are formed. Chance of some spray.	17 - 21 knots
6	Large waves begin to form; the white foam crests are more extensive everywhere. Probably some spray.	22 - 27 knots

E. W. Cowan
August 14, 1945

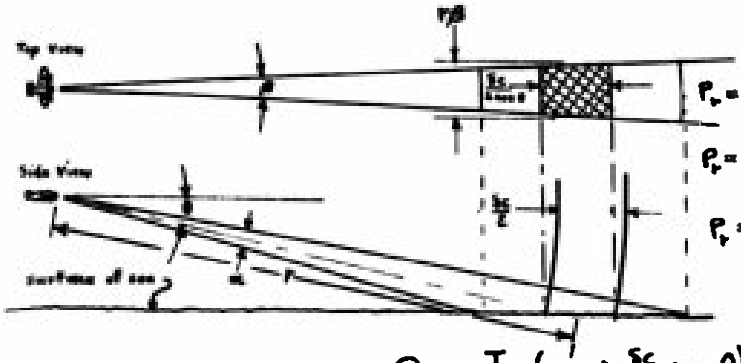

P_r = (rec. pwr. /scatter)(nos. of scatters)

$$P_r = \left(\frac{P_t G A \sigma_0}{(4\pi r^2)^2}\right)\left(n \cdot r\beta \cdot \frac{\delta c}{2\cos\theta}\right)$$

$$P_r = \frac{P_t G A \sigma_0 n \beta \delta c}{(4\pi)^2 r^3 2 \cos\theta}$$

Case I $\left(r\alpha > \frac{\delta c}{2}\tan\theta\right)$

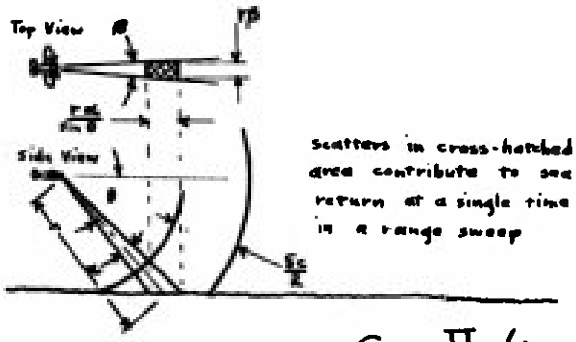

P_r = (rec. pwr. /scatter)(nos. of scatters)

$$P_r = \left(\frac{P_t G A \sigma_0}{(4\pi r^2)^2}\right)\left(n \cdot r\beta \cdot \frac{r\alpha}{\sin\theta}\right)$$

$$P_r = \frac{P_t G A \sigma_0 n \beta \alpha}{(4\pi)^2 r^2 \sin\theta}$$

Case II $\left(r\alpha < \frac{\delta c}{2}\tan\theta\right)$

Definitions of symbols not indicated on diagram;

P_t = transmitted power
G = gain of transmitting antenna over point source
δ = pulse duration
n = speed of light
A = absorption cross section of receiving antenna
P_r = power received from sea return at a given range averaged over a large number of range sweeps
σ_0 = effective cross section of each scatter as a function of θ
n = average number of scatters on a unit area of the sea

FIG. I. Two cases in the theoretical prediction of sea return.

Fig. 2 Variation of Sea Return with Range

Fig. 3 Variation of Sea Return with Range

Fig. 4. Variation of Sea Reflection with Range

KODAK SAFETY FILM

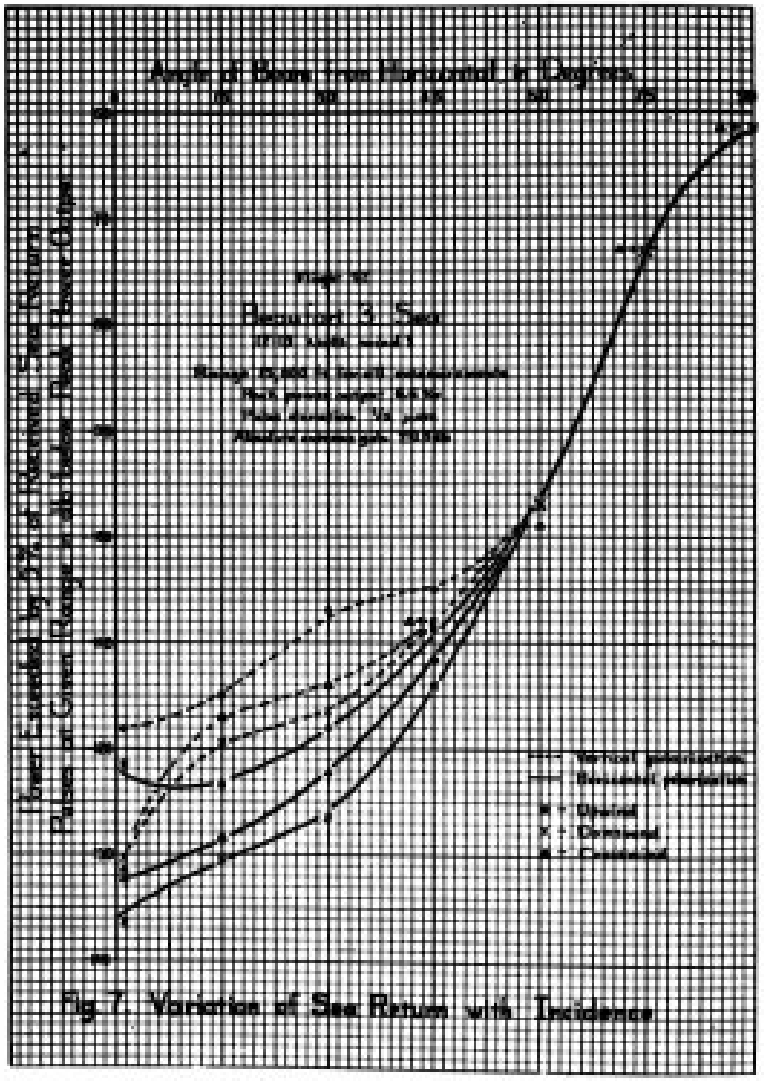

Fig. 7. Variation of Sea Return with Incidence

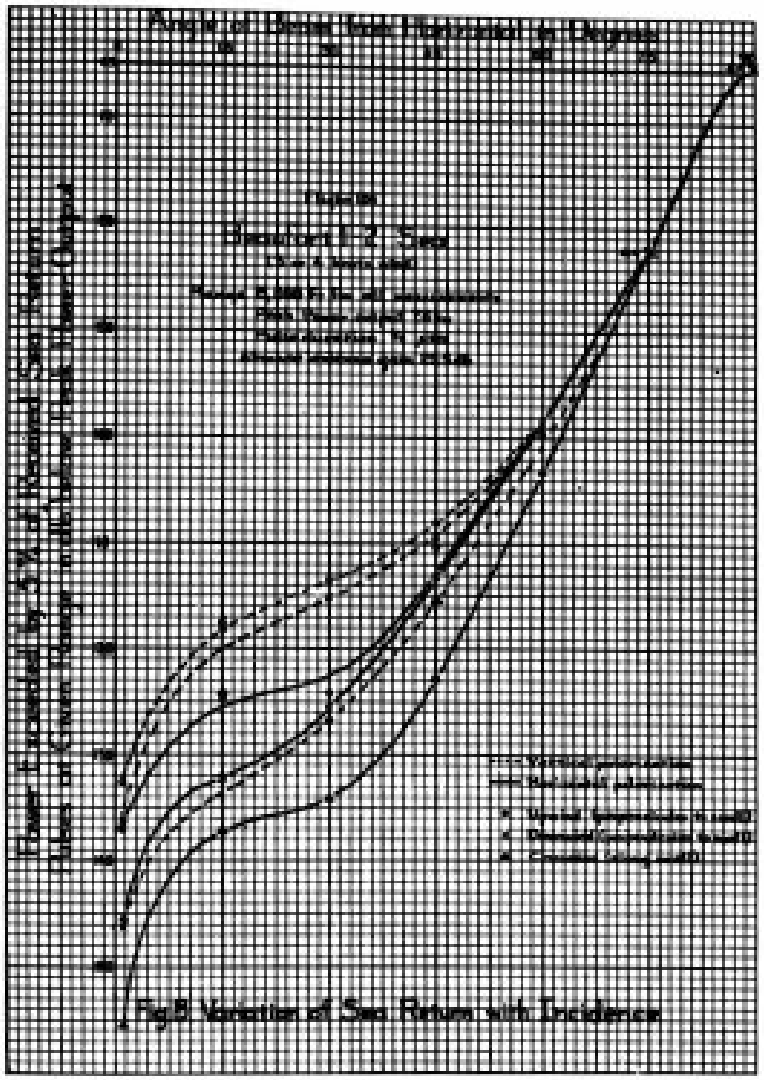

Fig. 8 Variation of Sea Return with Incidence

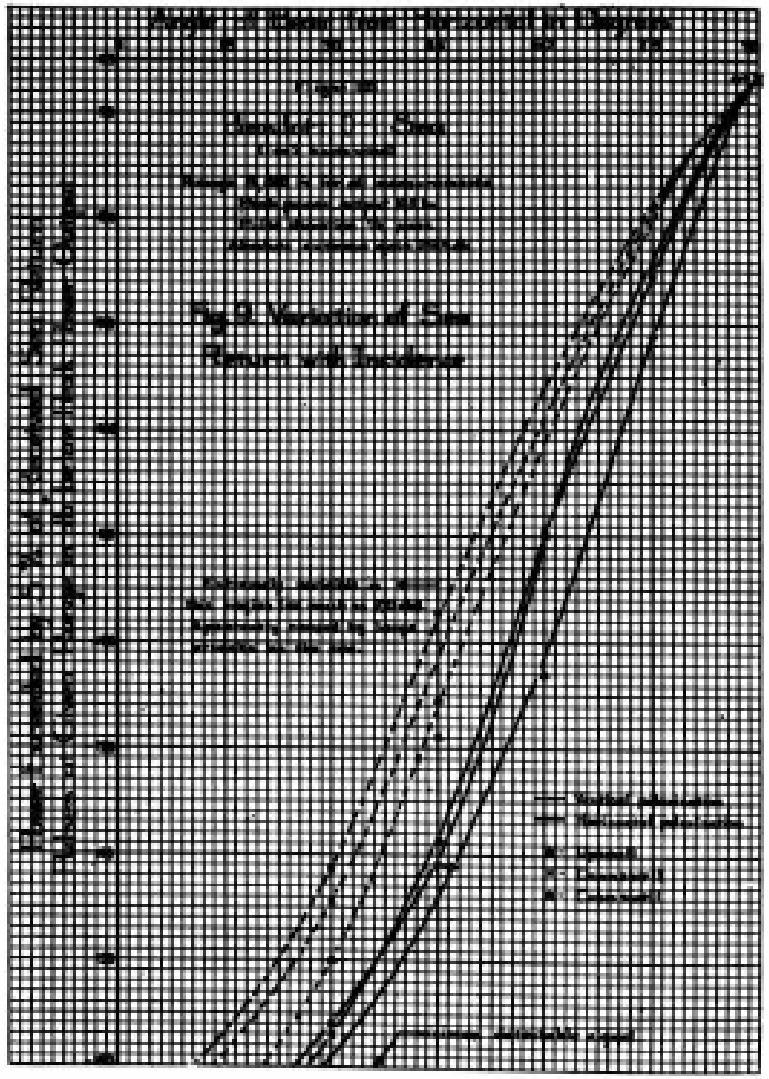
Fig 9 Variation of Sea
Return with Incidence

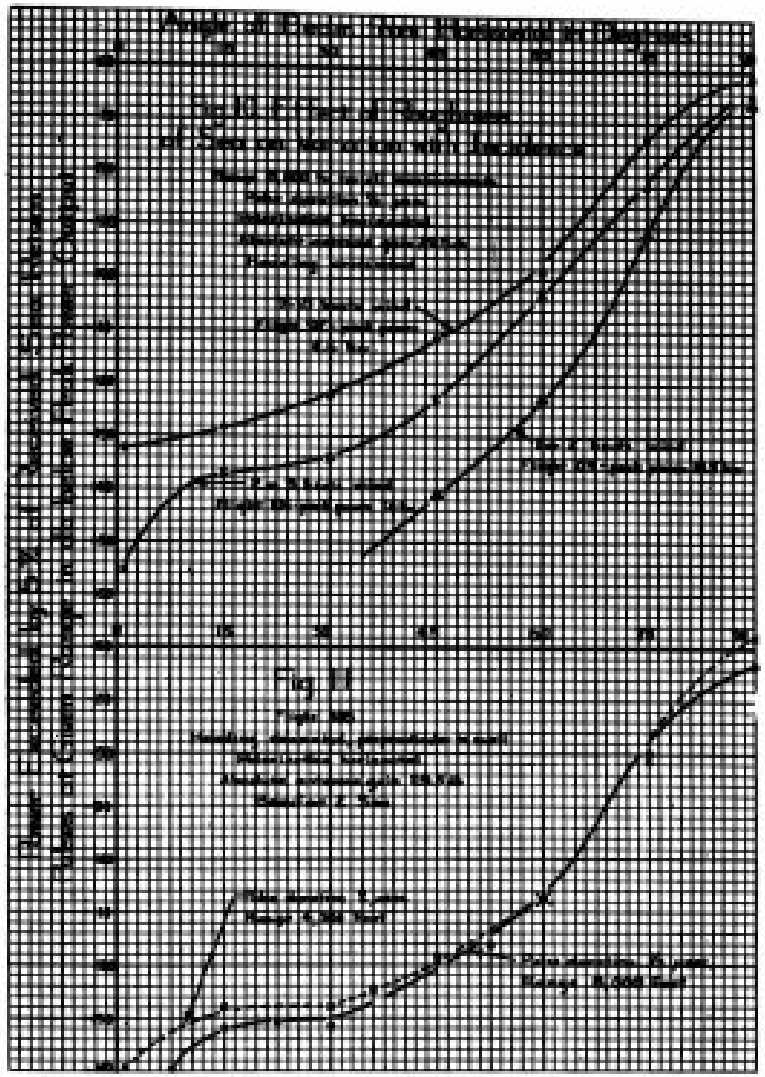
Fig 10 Effect of Roughness
of Sea on Variation with Incidence
Fig 11

KODAK SAFETY FILM

SAFETY FILM

REEL – C

958

A.T.I.

24500

TITLE: X-Band Sea-return Measurements

AUTHOR(S): Cowan, E. W.
ORIGINATING AGENCY: Massachusetts Institute of Technology, Cambridge, Mass.
PUBLISHED BY: Office of Scientific Research and Development, NDRC, Washington, D. C.

ATI- 13801
REVISION (None)
ORIG. AGENCY NO. R-870
PUBLISHING AGENCY NO. (None)

DATE	DOC. CLASS.	COUNTRY	LANGUAGE	PAGES	ILLUSTRATIONS
Aug '45	Unclass.	U.S.	Eng.	21	photos, graphs

ABSTRACT:

Measurements with the APS-6A X-band radar system show that sea return follows a law between an inverse square and inverse cube with range, and between zero and the first power with pulse duration. The maximum difference in sea return between vertical and horizontal polarization is approximately 10 db, with about the same maximum difference for different headings. Variations of the sea return with range, pulse duration, angle of incidence, roughness of sea, heading, and polarization are discussed.

DISTRIBUTION: Copies of this report obtainable from Air Documents Division; Attn: MCIDXD

DIVISION: Electronics (3)
SECTION: Radar (2)

SUBJECT HEADINGS: Radar sea reflections - X-band (77992); APS-6A (77992)

ATI SHEET NO.: R-3-2-73

TITLE: X-Band Sea-Return Measurements

AUTHOR(S): Cowan, E. W.
ORIGINATING AGENCY: Massachusetts Inst. of Technology, Radiation Lab., Cambridge
PUBLISHED BY: Office of Scientific Research and Development, NDRC, Div 14

ATI- 24500
DIVISION (None)
ORIG. AGENCY NO. R-870
PUBLISHING AGENCY NO. (None)

DATE	DOC. CLASS.	COUNTRY	LANGUAGE	PAGES	ILLUSTRATIONS
Aug '45	Unclass.	U.S.	Eng.	21	diagrs, graphs

ABSTRACT:

Measurements with an X-band system show that sea return follows a law between an inverse square and inverse cube with range, and between zero and the first power with pulse duration, tending toward the former set of conditions with shorter range, steeper incidence, and longer pulses. Sea return in surface radar follows closely the latter limits; the return for high-angle radar-controlled missiles approaches the former. The maximum difference in sea return between vertical and horizontal polarization is approximately 10 db, with about the same maximum difference for different headings. Vertical polarization and upwind headings give the greatest return.

DISTRIBUTION: Copies of this report obtainable from Air Documents Division; Attn: MCIDXD

DIVISION: Electronics (3)
SECTION: Radar (2)

ATI SHEET NO.: R-3-2-22

SUBJECT HEADINGS: Radar sea reflections X-band (77992)