Reproduced by

DOCUMENT SERVICE CENTER

ARMED SERVICES TECHNICAL INFORMATION AGENCY

U. B. BUILDING, DAYTON, 2, OHIO

REEL-C 71951

A.T.I 204563

"NOTICE: When Government or other drawings, specifications or other data are used for any purpose other than in connection with a definitely related Government procurement operation, the U.S. Government thereby incurs no responsibility, nor any obligation whatsoever; and the fact that the Government may have formulated, furnished, or in any way supplied the said drawings, specifications or other data is not to be regarded by implication or otherwise as in any manner licensing the holder or any other person or corporation, or conveying any rights or permission to manufacture, use or sell any patented invention that may in any way be related thereto."

UNCLASSIFIED

CONTRACT N6ONR—26303
PROJECT NR 064—167

204 563

U-1210 4

ANALYSIS OF THE INELASTIC BEHAVIOR OF TRANSVERSELY REINFORCED CYLINDRICAL SHELLS UNDER HYDROSTATIC PRESSURE

by

Joseph Kempner and V. L. Salerno

NAVY RESEARCH SECTION
SCIENCE DIVISION
REFERENCE DEPARTMENT
LIBRARY OF CONGRESS

OCT 5 1950

FILE COPY
NAVY RESEARCH SECTION
SCIENCE DIVISION
LIBRARY OF CONGRESS
TO BE RETURNED

PLEASE RETURN THIS COPY TO:
ARMED SERVICES TECHNICAL INFORMATION AGENCY
DOCUMENT SERVICE CENTER
Knott Building, Dayton 2, Ohio
Because of our limited supply you are requested to return this copy as soon as it has served your purposes so that it may be made available to others for reference use. Your cooperation will be appreciated.

POLYTECHNIC INSTITUTE OF BROOKLYN

DEPARTMENT OF

AERONAUTICAL ENGINEERING AND APPLIED MECHANICS

AUGUST 1950

PIBAL REPORT NO. 172

ANALYSIS OF THE INELASTIC BEHAVIOR OF TRANSVERSELY REINFORCED CYLINDRICAL SHELLS UNDER HYDROSTATIC PRESSURE

by

J. Kempner and V.L. Salerno

Contract No. N6 ONR-263 T.O. III

Project NR 064-167

Polytechnic Institute

Brooklyn, New York

August 1950

PIBAL NO. 172

SUMMARY

The engineering method of Schischka for the determination of the maximum allowable hydrostatic pressure producing plastic deformation of a closed circular cylindrical shell stiffened by equally spaced circular rings of identical geometric and elastic properties has been extended to include the "beam-column" effect of the axial portion of the load on the cylinder and the Viterbo effect.

Determination of the maximum allowable pressure for three cylinders whose physical properties lie within the range of interest to the naval architect indicates that the maximum allowable pressure in some cases may exceed considerably the elastic limit pressure. Furthermore, it is shown that for high yield strength materials the maximum allowable and elastic limit pressures, as well as their difference, calculated with the beam-column effect included, may be appreciably smaller than the corresponding quantities obtained with the beam-column effect neglected. A simple measure of the beam-column effect is shown to be the ratio of the pressure applied to a cylinder to the critical pressure for the cylinder with rings disregarded.

INTRODUCTION

The maximum allowable hydrostatic pressure which a reinforced cylindrical shell can withstand without danger of collapsing due to excessive plastic deformation is of particular interest to the naval architect. In Ref. (1) Schischka has presented an engineering approach to this problem which is somewhat similar to the method used in the limit design of beams and which is based upon the von Mises maximum shear strain energy criterion for plastic deformation (Ref. (2)). Schischka obtains the elastic limit pressure p_{L_o} by applying the von Mises criterion to the axial and circumferential stresses which occur at the intersection of the shell and ring frame. However, the maximum allowable pressure p_{a_o} is obtained by considering that residual stresses are induced by a preliminary loading, unloading, and subsequent reloading of the cylinder and by the application of the von Mises criterion at the intersection of the shell and ring frame as well as at a plane midway between the rings. Although the results presented in Ref. (1) indicate that the maximum allowable pressure may exceed the elastic limit pressure by a considerable amount, this need not be the case when high strength alloys are used for shell construction. In the present report, the "beam-column" effect of the axial load has been included so that the elastic limit pressure p_L and the maximum allowable pressure p_a used here correspond to the elastic limit pressure and maximum allowable pressure of Ref. (1) which have been designated herein for convenience as p_{L_o} and p_{a_o}, respectively. For cases where high strength alloys are used the beam-column effect of the axial portion of the load, which was omitted in Schischka's work, may be very significant.

It is the purpose of the present report to modify the equations of Ref. (1) so as to include the complete effect of the axial load as well as the Viterbo effect described in Ref. (3).

The authors are indebted to Professor N.J. Hoff for his guidance and criticism and to Messrs J.G. Pulos and K.A.V. Pandalai for their aid in performing the calculations for this investigation.

SYMBOLS

$A = A_r + bt$

A_r cross sectional area of reinforcing ring

C_1, C_2, C_3, C_4 parameters

$D = Et^3/12(1-\nu^2)$

E Young's modulus

G shear modulus

I moment of inertia of shell plating per unit circumferential length

$K_1, K_2 \ldots K_8$ parameters

L half length of unsupported shell of a typical bay

M bending moment per unit circumferential length of shell

S applied axial tensile force per unit circumferential length of shell

U_s shear strain energy per unit volume

$U^i_{s_r}$ shear strain energy per unit volume in shell at inner surface at ring.

$U^o_{s_m}$ shear strain energy per unit volume in shell at outer surface at plane mid-way between rings

U_{s_L} elastic limit shear strain energy per unit volume

a radius of median surface of shell

b faying width of ring

$c = [k^2 - (\rho/4)]^{1/2}$

$d = [k^2 + (\rho/4)]^{1/2}$

$e = cL$

$f = dL$

$k = [3(1-\nu^2)/a^2t^2]^{1/4}$

k_1, k_2 parameters

p hydrostatic pressure

p_{L_o} elastic limit pressure, no beam-column effect

p_{a_o} maximum allowable pressure, no beam-column effect

p_L elastic limit pressure, beam-column effect included

p_a maximum allowable pressure, beam-column effect included

$\overline{p}_{cr} = 2Et^2/a^2[3(1-\nu^2)]^{1/2}$

t shell thickness

w radial deflection of shell, positive outward

$\overline{w} = [1-(\nu/2)](pa^2/Et)$

x axial coordinate of point on median surface of shell

$\eta = A_r k^4 L^3/t$

ϑ inelastic rotation of axial shell elements at rings

ν Poisson's ratio

$\rho = -(S/D) = pa/2D$

σ_1, σ_2 principal stresses

σ_L yield stress for uniaxial tension or compression

σ_x, σ_Φ total axial and circumferential stresses, respectively, positive in tension

$\sigma_{x_r}^{i}$, $\sigma_{\Phi_r}^{i}$ axial and circumferential stresses, respectively, at inner surface of shell at rings

$\sigma_{x_m}^{o}$, $\sigma_{\Phi_m}^{o}$ axial and circumferential stresses, respectively, at outer surface of shell at plane mid-way between rings

BASIC THEORY AND ASSUMPTIONS

In the present analysis of a transversely reinforced cylindrical shell loaded by hydrostatic pressure of a magnitude sufficient to cause yielding of the shell material, several simplifying assumptions are made. The reinforced shell is considered to be of infinite extent in its axial direction and to be subdivided into identical bays by rings of identical geometric and elastic properties (see Fig. (1)). The uniform shell thickness is considered small compared to the radius of the median surface of the shell, which in turn is assumed to differ negligibly from the radius of the median line of the ring. The hydrostatic pressure load is taken as constant over the entire structure, and hence for a pressure less than that which would cause instability, it produces axially symmetric deformations. The magnitudes of these deformations are considered to be of the order of the skin thickness. Thus the well-known ordinary differential equation for small axially symmetric deflections of thin-walled circular cylindrical shells can be applied to the analysis of elastic portions of the cylinder (see Refs. (3) and (4)).

As in Ref. (1), in the present report the maximum shear strain energy is considered as the criterion for yielding of the shell material. Thus any element of the shell is considered incapable of resisting further stresses once the shear strain energy per unit volume of that element becomes equal to a value predetermined by experiment. This value depends upon the elastic properties of the shell material and is taken as that value of the shear strain energy per unit volume at which yielding first occurs during a uniaxial tension or compression test of a sample of the material used.

It has been shown in Ref. (1) and it will be assumed here that for a given hydrostatic pressure the shear strain energy, considered as a function of the axial coordinate of the shell, has two distinct maxima, one at a ring and one at a plane mid-way between two successive rings for those cylinders characteristic of naval construction. The shear strain energy in the neighborhood of a ring rises sharply to a maximum at the inner surface of the shell, whereas the energy at the plane between rings rises gradually to a second but lower maximum at the outer surface of the shell. Thus with increasing hydrostatic load the shear strain energy will reach its maximum permissible value first at the inner surface of the shell adjacent to the rings. With further increase of load, the plastic zone which accompanies the prescribed value of the maximum shear strain energy expands in a direction normal to the shell surface as well as parallel to the shell axis. Simultaneously, the shear strain energy approaches its limit value at the outer surface of the shell mid-way between rings. Loading is considered to be maximum when the maximum permissible shear strain energy per unit volume is obtained at the latter location. Because of the rapidly changing value of the shear strain energy at the rings, it is reasonable to assume that the axial spread of the plastic zone in this neighborhood is confined to a narrow region within which all plastic deformation takes place. To facilitate a simple mathematical formulation of the problem of the inelastic behavior of the cylinder, this region is considered to be of infinitesimal extent. Consequently, except for the edges in contact with the rings, the entire shell may be treated as an elastic body, and the problem is reduced to the determination of the state of stress in a typical bay stressed by hydrostatic pressure as well as by deformations along the edges in contact with the rings.

These basic ideas and assumptions may be integrated from an alternative point of view if the following fictitious process of loading of the cylinder is imagined. Sufficient pressure is applied so that the shell yields at the rings but is stressed just within the yield limit at the plane midway between rings. Hence, except for infinitesimal strips at the rings, the shell remains elastic. Next the applied load is removed. Since yielding occurred at the rings during the loading process, permanent distortions of the shell at the rings in the form of radial deflections, circumferential strains, and rotations of the axial elements are present after the load is removed. These permanent distortions at the rings result in "residual" stresses in the remaining elastic portions of the cylinder which has been restrained from returning to its original unstressed position. If the cylinder is loaded once more, this load may be equal to or less than the previous load without inducing further inelastic distortions. However, the stresses in the elastic shell now consist of the residual stresses from the unloading process and the additional elastic stresses caused by the second application of load. Any increase in pressure above the originally applied pressure will cause further permanent distortions in conjunction with yielding at the planes mid-way between rings. Thus the maximum allowable pressure is defined as the maximum hydrostatic pressure which can be applied to a cylinder and which produces yielding at the outermost fiber at a plane mid-way between rings. This pressure, together with the inelastic edges distortions, produces total stresses (residual plus elastic) satisfying simultaneously the yield criterion at both the inner surface of the shell at the rings and the outer surface of the shell at the plane mid-way between successive rings. Consequently, the problem is reduced to the determination of the state of stress and subsequently the shear strain energy in a typical bay consisting of an elastic shell supported at its edges by inelastic strips of shell which transmit the load to elastic rings.

DETERMINATION OF SHELL STRESSES

Deflections of an Elastic Shell

In order to calculate the stresses in an elastic shell, the deflections must first be found. In accordance with the assumptions made these deflections must satisfy the following fourth order linear differential equation with constant coefficients [see Refs. (3) and (4).]:

$$\frac{d^4w}{dx^4} - \frac{S}{D}\frac{d^2w}{dx^2} + \frac{Et}{a^2D}w = -\frac{p}{D} - \frac{\nu S}{aD} \qquad (1)$$

in which w is the radial deflection of a point on the median surface of the shell of radius a [see Figs. (1) and (2)], x the axial coordinate of the point, p the applied hydrostatic pressure, S the applied axial tensile force per unit circumferential length given by $S = -pa/2$, ν Poisson's ratio, t skin thickness, and D the bending rigidity of the skin per unit length.

The general solution of equation (1) contains four arbitrary constants, and consequently four boundary conditions are required to determine these constants. However, if the symmetry of load and structure is considered and if the origin of coordinates is chosen midway between two ring frames as shown in Fig. (2), only even functions of the axial coordinate x are retained in the solution, and this automatically removes two arbitrary constants from the solution. The solution may then be given as

$$w = A \cos dx \cosh cx + B \sin dx \sinh cx - \bar{w} \qquad (2)$$

where A and B are constants of integration and

$$\begin{aligned} c &= [k^2 - (\rho/4)]^{1/2} \\ d &= [k^2 + (\rho/4)]^{1/2} \\ \rho &= (S/D) = pa/2D \end{aligned} \qquad (3)$$

The first boundary condition to be satisfied is the requirement that the ring and shell must deflect radially the same amount where they are in contact at $x = L$. In Ref. (3) it was found that this condition is satisfied if

$$w_r = (t/2Ak^4)[(\frac{d^3w}{dx^3})_{x=L} - 2Dk^4\overline{w}] \qquad (4a)$$

where

$w_r = w$ when $x = L$

$A = A_r + bt$

A_r is the cross sectional area of a reinforcing ring

b is the width of the ring faying surface

$k^4 = 3(1 - \nu^2)/(at)^2$

$\overline{w} = (2-\nu)pa^2/2Et$

Equation (4a) includes the Viterbo effect, which accounts for the influence of the axial load on the ring deflection [Ref. (3)].

The other boundary condition is that at the rings the shell rotates through some finite angle ϑ because of plastic deformation through an infinitesimal strip of shell plating adjacent to the rings. Consequently,

$$\frac{dw}{dx} = \vartheta \text{ when } x = L \qquad (4b)$$

Equations (2), (4a) and (4b) when solved simultaneously yield the solution for the deflection $w(x)$:

$$w(x) = (2/K_2)\{[C_4(w_r + \overline{w}) - C_2\vartheta L]\cos fx/L \cosh ex/L +$$

$$+ [C_3(w_r + \overline{w}) + C_1\vartheta L]\sin fx/L \sinh ex/L\} - \overline{w}$$

where

$$e = cL, \quad f = dL$$

$$C_1 = \cos f \cosh e$$

$$C_2 = \sin f \sinh e$$

$$C_3 = f \sin f \cosh e - e \cos f \sinh e$$

$$C_4 = e \sin f \cosh e + f \cos f \sinh e$$

and

$$w_r + \overline{w} = K_1 \left[k_1 \vartheta L + \eta K_2 \overline{w}\right]$$

where

$$\eta = A_r k^4 L^3/t$$

$$k_1 = efK_3 - (1/2)(f^2 - e^2)K_2$$

$$K_1 = 1/[A\eta K_2/A_r + ef(e^2 + f^2)(\cosh 2e - \cos 2f)]$$

$$K_2 = e \sin 2f + f \sinh 2e \tag{5b}$$

$$K_3 = e \sinh 2e - f \sin 2f$$

It may be noted that equation (2) is only one of three possible trigonometric and hyperbolic forms of solution of equation (1) and involves no imaginary cuantities if c is real ($k^2 > \rho/4$). If c is imaginary then cosh ex/L and sinh ex/L, respectively, may be replaced by cos ex/L and sin ex/L; and if c is zero, they may be replaced by unity and x. Only that form of solution of equation (1) which is given by equation (2) requires consideration for the present analysis. For $\vartheta = 0$, detailed descriptions of each of the three solutions are given in Ref. (3).

Stresses in the Shell

The stresses in the elastic shell can now be obtained from equation (5). In the axial direction the total stress consists of a uniform axial compressive stress and a bending stress which is linearly distributed across the shell thickness. In the circumferential direction the total stress is the sum of a uniform circumferential hoop stress due to radial expansion or contraction of the shell and a linearly distributed normal stress equal to the product of Poisson's ratio and the total axial stress [see Ref. (3)]. Thus the total stresses at the surfaces of the shell are

$$\sigma_x = S/t \mp Mt/(2I) \tag{6}$$

and

$$\sigma_\Phi = \nu\sigma_x + Ew/a \tag{7}$$

in which σ_x and σ_Φ, respectively, are the total axial and circumferential stresses in the shell considered positive in tension, M is the bending moment and I the moment of inertia of the shell plating, each for a unit of circumferential length of the shell. It should be noted that in these equations the minus sign refers to the outer surface and the plus sign refers to the inner surface of the shell. The moment can be expressed in terms of the deflection of the shell as follows [Ref. (3)]:

$$M = D\frac{d^2w}{dx^2} \tag{8}$$

Thus equation (6) can be rewritten as

$$\sigma_x = -[Et/2(1-\nu^2)][\pm\frac{d^2w}{dx^2} + (1-\nu^2)ap/Et^2] \tag{9}$$

in which the plus sign now refers to the outer surface of the shell.

For the purpose of the present report equations (7) and (9) require evaluation only at the inner surface of the shell at the ring and at the outer surface of the shell at the plane mid-way between rings. From equations (7) and (9), the corresponding stresses are

$$\sigma_{x_r}^{i} = -[Et/2(1-\nu^2)][-(\frac{d^2w}{dx^2})_r + (1-\nu^2)ap/Et^2] \tag{10}$$

$$\sigma_{\Phi_r}^{i} = \nu\sigma_{x_r}^{i} + Ew_r/a \tag{11}$$

$$\sigma_{x_m}^{o} = -[Et/2(1-\nu^2)][(\frac{d^2w}{dx^2})_m + (1-\nu^2)ap/Et^2] \tag{12}$$

$$\sigma_{\Phi_m}^{o} = \nu\sigma_{x_m}^{o} + Ew_m/a \tag{13}$$

in which the superscripts i and o, respectively, refer to the inner and outer shell surfaces, and the subscripts r and m, respectively, refer to the ring and plane mid-way between rings.

Evaluation of equation (5) and its second derivative at $x = x_r = L$ and $x = x_m = 0$ results in the following final expressions for the stresses defined by equations (10) to (13):

$$\sigma_{x_r}^{i} = -[Et/(1-\nu^2)L^2]\left\{\eta K_1 k_2 \bar{w} + (1-\nu^2)aL^2p/2Et^2 + (K_1 k_1 k_2 - efK_4)(\vartheta L/K_2)\right\} \tag{14}$$

$$\sigma_{\Phi_r}^{i} = \nu\sigma_{x_r}^{i} + (E/a)\left\{(\eta K_1 K_2 - 1)\bar{w} + K_1 k_1 \vartheta L\right\} \tag{15}$$

$$\sigma_{x_m}^{o} = [Et/(1-\nu^2)L^2]\left\{\eta(e^2 + f^2)K_1 K_5 \bar{w} - (1-\nu^2)aL^2p/2Et^2 + \right.$$
$$\left. + [(e^2 + f^2)K_1 K_5 k_1 - 2efK_6 - (f^2 - e^2)K_8](\vartheta L/K_2)\right\} \tag{16}$$

$$\sigma_{\Phi_m}^{o} = \nu\sigma_{x_m}^{o} + (2E/a)\left\{[\eta K_1 K_7 - (1/2)]w + (K_1 K_7 k_1 - K_8)(\vartheta L/K_2)\right\} \tag{17}$$

in which

$$k_1 = efK_3 - (1/2)(f^2 - e^2)K_2$$

$$k_2 = efK_3 + (1/2)(f^2 - e^2)K_2$$

$$K_1 = 1/[A\eta K_2/\Lambda_r + ef(e^2 + f^2)(\cosh 2e - \cos 2f)]$$

$$K_2 = e \sin 2f + f \sinh 2e$$

$$K_3 = e \sinh 2e - f \sin 2f$$

$$K_4 = \cos 2f + \cosh 2e$$

$$K_5 = f \cos f \sinh e - e \sin f \cosh e$$

$$K_6 = \cos f \cosh e$$

$$K_7 = e \sin f \cosh e + f \cos f \sinh e$$

$$K_8 = \sin f \sinh e$$

The remaining symbols have been defined previously. Equations (14) to (17) are used in the determination of the shear strain energy quantities which are required in the present analysis.

If Ref. (3) is used to supplement the present report, it is useful to note that the important parameters of that report are defined in terms of those of this report as follows:

$$W = (2/L^3)[(A\eta/\Lambda_r) - (1/K_1K_2)]$$

$$T = \eta K_1K_2$$

$$G = WT$$

$$U_o = -2iK_7/L \quad , \quad i = (-1)^{1/2}$$

$$H = -iK_2/L$$

$$J_o = -(2K_5/L^2K_2)(e^2 + f^2)$$

$$J_L = -2k_2/L^2K_2$$

SHEAR STRAIN ENERGY

It has been shown by von Mises [Ref. (2)] and mentioned previously that a useful measure for determining the onset of plastic deformation is the shear strain energy stored in the material when this energy attains a known limiting value. For an elastic material the shear strain energy, which is that portion of the total strain energy resulting from a change in shape but not in the volume of an element of the material, is expressible as a function of the stresses in the material. For a two dimensional stress problem, such as that of the present report, the shear strain energy per unit volume becomes [see Ref. (5)].

$$U_s = (1/6G)(\sigma_1^2 + \sigma_2^2 - \sigma_1\sigma_2) \tag{18}$$

in which G is the shear modulus and σ_1 and σ_2 are principal stresses. In the present report it is readily seen from the symmetry of structure and loading that no shear stresses exist in the circumferential direction on planes normal to the cylinder axis. Thus σ_x and consequently σ_Φ are principal stresses. Hence, the shear strain energy per unit volume at the inner surface of the shell at the ring and at the outer surface of the shell at the plane mid-way between rings, respectively, can be expressed as

$$U^i_{s_r} = (1/6G)[(\sigma^i_{x_r})^2 + (\sigma^i_{\Phi_r})^2 - (\sigma^i_{x_r})(\sigma^i_{\Phi_r})] \tag{19}$$

and

$$U^o_{s_m} = (1/6G)[(\sigma^o_{x_m})^2 + (\sigma^o_{\Phi_m})^2 - (\sigma^o_{x_m})(\sigma^o_{\Phi_m})] \tag{20}$$

of the accurate solution of equations (22) and (23), since these equations contain transcendental functions of the pressure p and, therefore, must be solved by an iteration procedure.

The actual procedure applied in the present report for the numerical solution of equations (22) and (23) is as follows. For a given cylinder, c and d of equations (4) are taken equal to k and the stresses of equations (14) to (17) computed as linear functions of p and ϑ. Then the elastic limit pressure p_{L_o} is computed from equation (22) by setting $\vartheta = 0$. The elastic limit pressure is used as a basis for a first approximation in the determination of the linearized maximum allowable pressure p_{a_o}. This quantity is determined from the simultaneous solution of the quadratic equations in p and ϑ (equations (22) and (23) with $e = f = kL$). To accomplish this calculation, equations (22) and (23) may be plotted, or as in the calculations of the present report, transformed into equations suitable for a successive approximation solution. Equation (22) is written as a quadratic in descending powers of ϑ, and equation (23) as a quadratic in descending powers of p. Based on the results obtained from the elastic limit pressure calculation ($\vartheta = 0$), a first approximation is made to the allowable pressure. Substitution of this quantity into the quadratic in ϑ and subsequent solution of the resulting equation yields a first approximation to ϑ. This quantity is then introduced into the quadratic in p, and a second approximation to p is computed. The procedure outlined is repeated until two successive sets of solutions for p and ϑ are sufficiently close to each other. If more than one possible solution exists, that solution which corresponds to the lowest pressure which is greater than the elastic limit pressure is the significant solution.

The final value of p obtained as described above is then used as a basis for a first approximation in the numerical solution of equations (22) and

If the yield stress σ_L of the material is determined by a uniaxial compression or tension test, then the limiting value of the shear strain energy for the material tested can be computed from equation (18) and is

$$U_{s_L} = (1/6G)\ \sigma_L^2 \tag{21}$$

Substitution of equation (21) into equations (19) and (20) yields the following equations which represent yield criteria for the shell at a ring and at the plane mid-way between rings.

$$(\sigma^i_{x_r})^2 + (\sigma^i_{\Phi_r})^2 - (\sigma^i_{x_r})(\sigma^i_{\Phi_r}) = \sigma_L^2 \tag{22}$$

$$(\sigma^o_{x_m})^2 + (\sigma^o_{\Phi_m})^2 - (\sigma^o_{x_m})(\sigma^o_{\Phi_m}) = \sigma_L^2 \tag{23}$$

If the uniaxial yield stresses are different for compression and tension, it is suggested that the former quantity be used since the stresses appearing in equations (22) and (23) are predominantly compressive.

DETERMINATION OF MAXIMUM ALLOWABLE PRESSURE

The maximum allowable pressure p_a can now be defined mathematically as that pressure which together with inelastic edge distortions ($\vartheta \neq 0$) produces axial and circumferential stresses of magnitudes such that equations (22) and (23) are satisfied simultaneously. Accordingly, the elastic limit pressure p_L is defined as that pressure for which equation (22) is satisfied for $\vartheta = 0$. In addition, if in equations (14) to (17) e and f are each taken equal to kL, ($\rho = 0$), then the beam column effect of the second term on the left-hand side of equation (1) is omitted and the stresses become linear functions of p and ϑ. The latter fact can be used for the determination of a first approximation to the simultaneous solution of the non-linear equations (22) and (23). Such a starting point is necessary for an efficient determination

(23) for $e \neq f \neq kL$. The first approximation for p is introduced into equations (22) and (23), and the resulting quadratic equations in ϑ are each solved. In general, the value of ϑ obtained from equation (22) differs from that obtained from equation (23). If such is the case, a second approximation for p is made and equations (22) and (23) are again solved. The procedure is continued until that p is found which yields, within the desired accuracy for p, equal values of ϑ. The final value of the pressure p_a thus obtained is the maximum allowable pressure and the corresponding ϑ is a measure of the associated inelastic deformation of the shell at the ring. It is useful in the calculations to note that, in accordance with the sign convention adopted, only positive values of ϑ and p require consideration.

DISCUSSION OF NUMERICAL RESULTS

The maximum allowable pressures p_{a_o}, p_a and the elastic limit pressures p_{L_o}, p_L were determined for three cylinders representative of the range of interest of the naval architect [see Ref. (3)]. These cylinders are designated as cylinders 1, 2, and 3 and have their geometric and elastic properties listed in Table I. The results of the calculations performed according to the procedures described previously are presented in Figs. (3) to (6). In Figs. (3) to (5) the maximum allowable pressure p_a which includes the beam-column effect, the elastic limit pressure p_L which also includes the beam-column effect, and p_{a_o} and p_{L_o}, respectively, maximum allowable and elastic limit pressures calculated without the beam-column effect are plotted as functions of the yield stress σ_L up to $\sigma_L = 100{,}000$ lbs. per sq. in. These figures indicate that the maximum allowable pressure may considerably exceed the elastic limit pressure. Figs. (3) and (4) show that the pressure p_a, which includes the beam-column effect, may be appreciably less than p_{a_o}, which does not include this effect. Similar observations can be made for p_L and p_{L_o}. On the other hand, Fig. (5) indicates that for cylinder 3 the beam-column effect is negligible.

Figs. (3) and (4) also indicate that for high yield strength materials the difference between p_a and p_L may be much less than the corresponding difference between p_{a_o} and p_{L_o}. In Fig. (3) it is seen that for $\sigma_L > 55{,}000$ lbs. per sq. in. $p_a < p_{L_o}$. Consequently, a design pressure based on calculations which do not include the beam-column effect and which appears to preclude yielding of the shell material may in reality exceed the maximum allowable pressure p_a and result in excessive permanent deformations.

In the theory of beam columns a measure of the importance of the beam-column effect is the ratio of the applied axial load to the theoretical critical load. Similarly for the present problem, such a criterion can also be established. However, the theoretical elastic buckling load for this problem involves the solution of the transcendental equation obtained by taking $(1/K_1) = 0$ [see equation (5b)] and therefore is not readily obtainable. The present calculations show that a good indication of the importance of the beam-column effect is simply the ratio of the hydrostatic pressure applied to the cylinder to the hydrostatic pressure which would produce axially symmetric buckling of the cylinder with rings disregarded. This latter pressure is given by $\bar{p}_{cr} = 2Et^2/a^2[3(1-\nu^2)]^{1/2}$ and corresponds to that value of p which makes $c = 0$ in equation (4). The axial stress produced by $\bar{p}_{cr}$ is the well-known theoretical buckling stress for axially symmetric buckling of a long thin-walled shell, $\bar{\sigma}_{cr} = 0.605Et/a$. Thus, in the present calculations it is seen from Table I and Figs. (3) to (5) that for $\sigma_L = 100{,}000$ lbs. per sq. in., $p_{a_o}/\bar{p}_{cr} = 0.943$, 0.485, and 0.299, respectively, for cylinders 1, 2, and 3. Accordingly, the corresponding relative importance of the beam-column effect as measured by the ratio $(p_{a_o} - p_a)/p_{a_o}$ is 0.170, 0.127, 0.007.

The inelastic angular distortion ϑ calculated for each of the three cylinders is plotted against σ_L in Fig. (6) and compared therein with the corresponding angle ϑ_o which is obtained from calculations which neglect the beam-column effect. It can be seen that ϑ may be larger than or less than ϑ_o depending upon the cylinder characteristics.

CONCLUSIONS

The results of the calculations described previously indicate that the maximum allowable hydrostatic pressure on a transversely reinforced thin-walled shell may considerably exceed the elastic limit pressure. Furthermore, the maximum allowable and elastic limit pressures may be influenced to a large extent by the beam-column effect of the axial portion of the load. A simple measure of the effect is the ratio of the pressure calculated without the beam-column effect to the critical pressure for the unreinforced shell. If this ratio is small, the beam-column effect is likewise small. If the ratio is large, the allowable and elastic limit pressures p_a and p_L, respectively, as well as their difference $(p_a - p_L)$ can be appreciably smaller than the corresponding quantities p_{a_o}, p_{L_o}, $(p_{a_o} - p_{L_o})$, respectively, calculated without consideration of the beam-column effect.

REFERENCES

1. Schischka, Ernst: Zur Plastizität des Druckkörpers von U-Booten (The Plasticity of the Pressure Hulls of U-boats). Forschungsbericht Nr. 37, Techn. Hochschule, Wien, June 2, 1945.

2. von Mises, R.: Göttinger Nachrichten, Math. Phys. Kl., 1913, p. 582.

3. Salerno, V.L. and Pulos, John G.: Stress Distribution in a Circular Cylindrical Shell under Hydrostatic Pressure Supported by Equally Spaced Circular Ring Frames. Pibal Report #171, April, 1950.

4. Timoshenko, S.: Theory of Elastic Stability. McGraw-Hill Book Company, Inc., First Edition, 1936, p. 425.

5. Timoshenko, S.: Strength of Materials, Part II. D. Van Nostrand Company, Inc., Second Edition, 1941, p. 479.

Cyl. No.	2L, in.	t, in.	a, in.	b_r, in.	A_r, in.^{2}	$E \times 10^{-6}$ lbs./in.^{2}	ν	$\bar{p}_{cr}$ lbs./in.^{2}
1	15.00	0.500	140	0	5.00	30	0.3	463
2	25.25	0.625	103	4.75	9.25	30	0.3	1337
3	48.00	1.125	120	6.00	40.0	30	0.3	3192

Table I. – Geometric and elastic characteristics of cylinders analyzed.

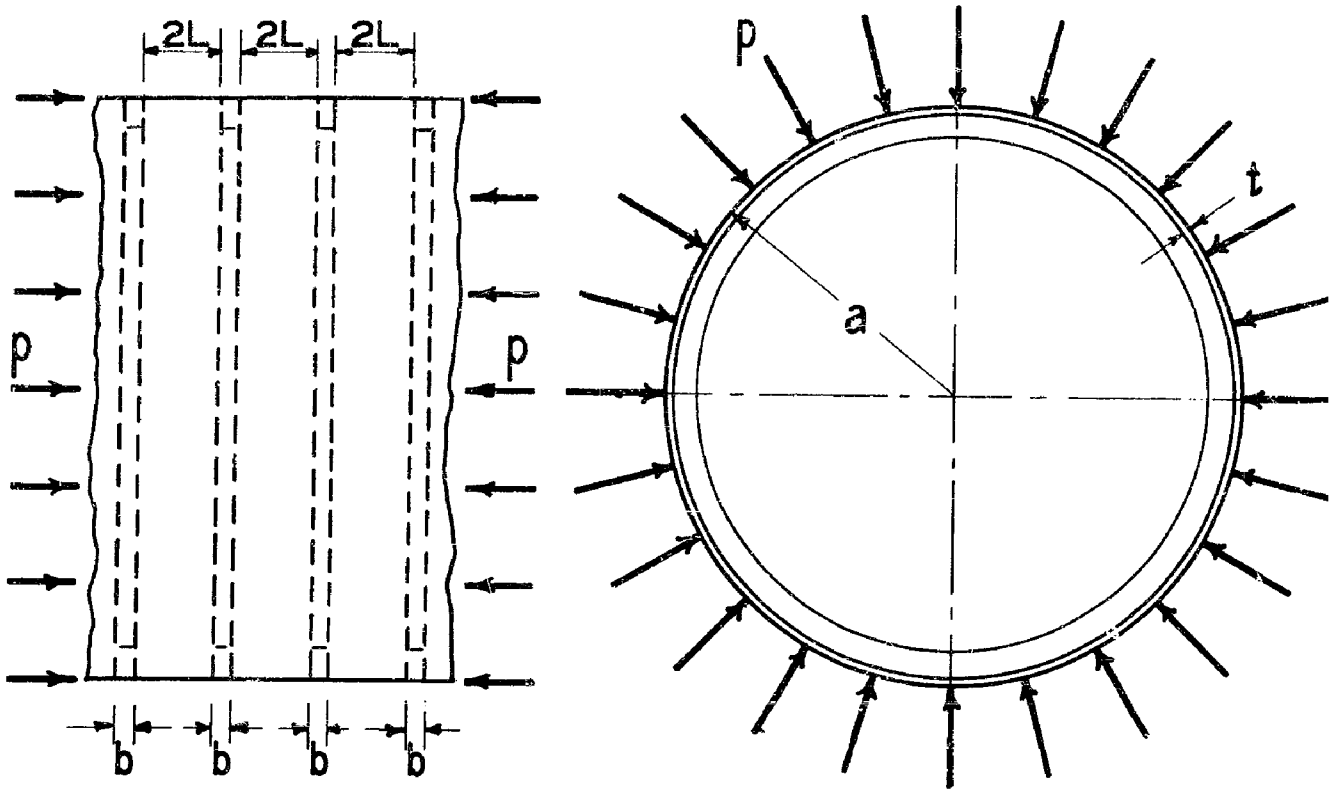

FIG. 1 LONG TRANSVERSELY REINFORCED SHEI
UNDER HYDROSTATIC PRESSURE

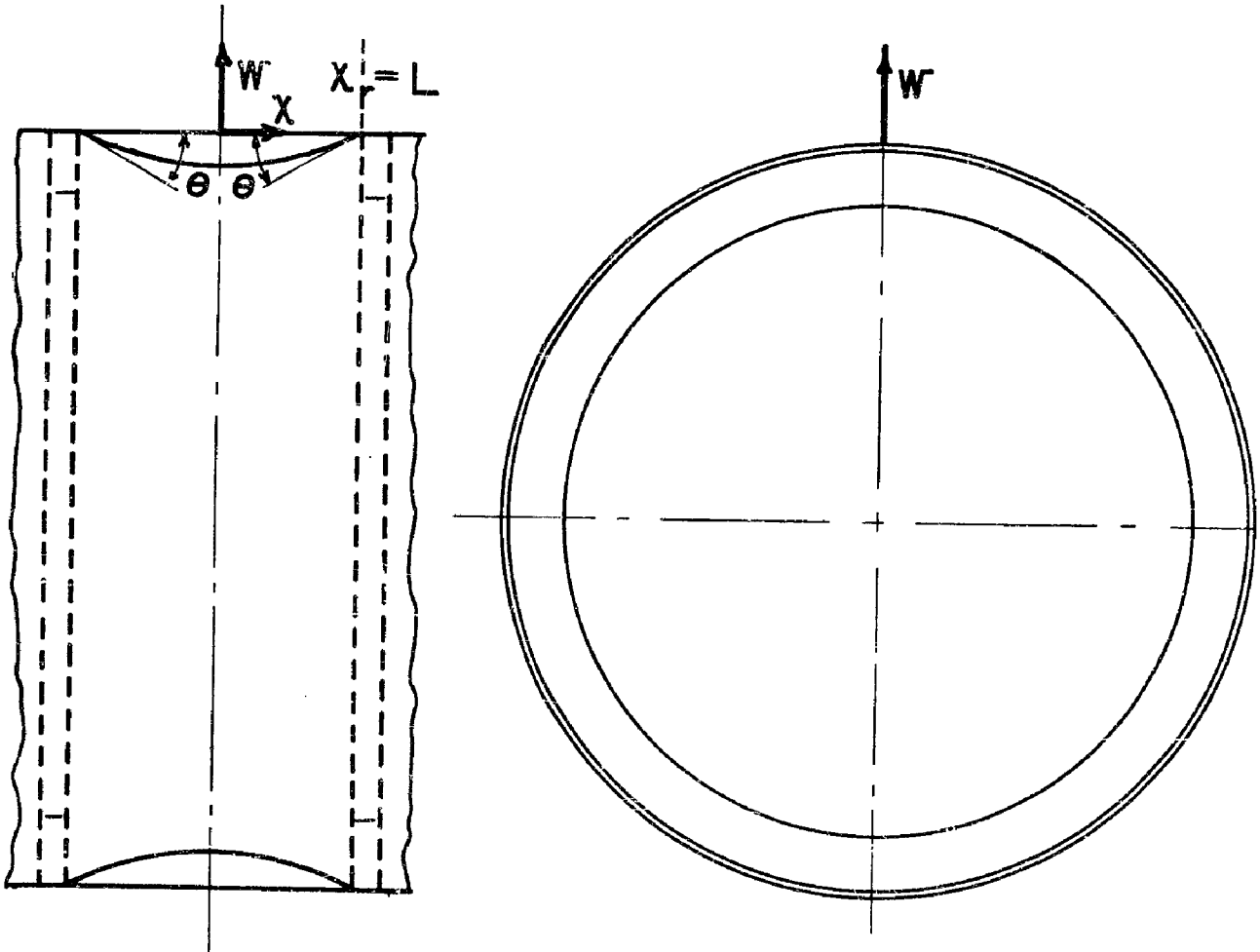

FIG. 2 SIGN CONVENTION FOR AXIAL COORDINA
X AND RADIAL DEFLECTION w FOR A
TYPICAL BAY

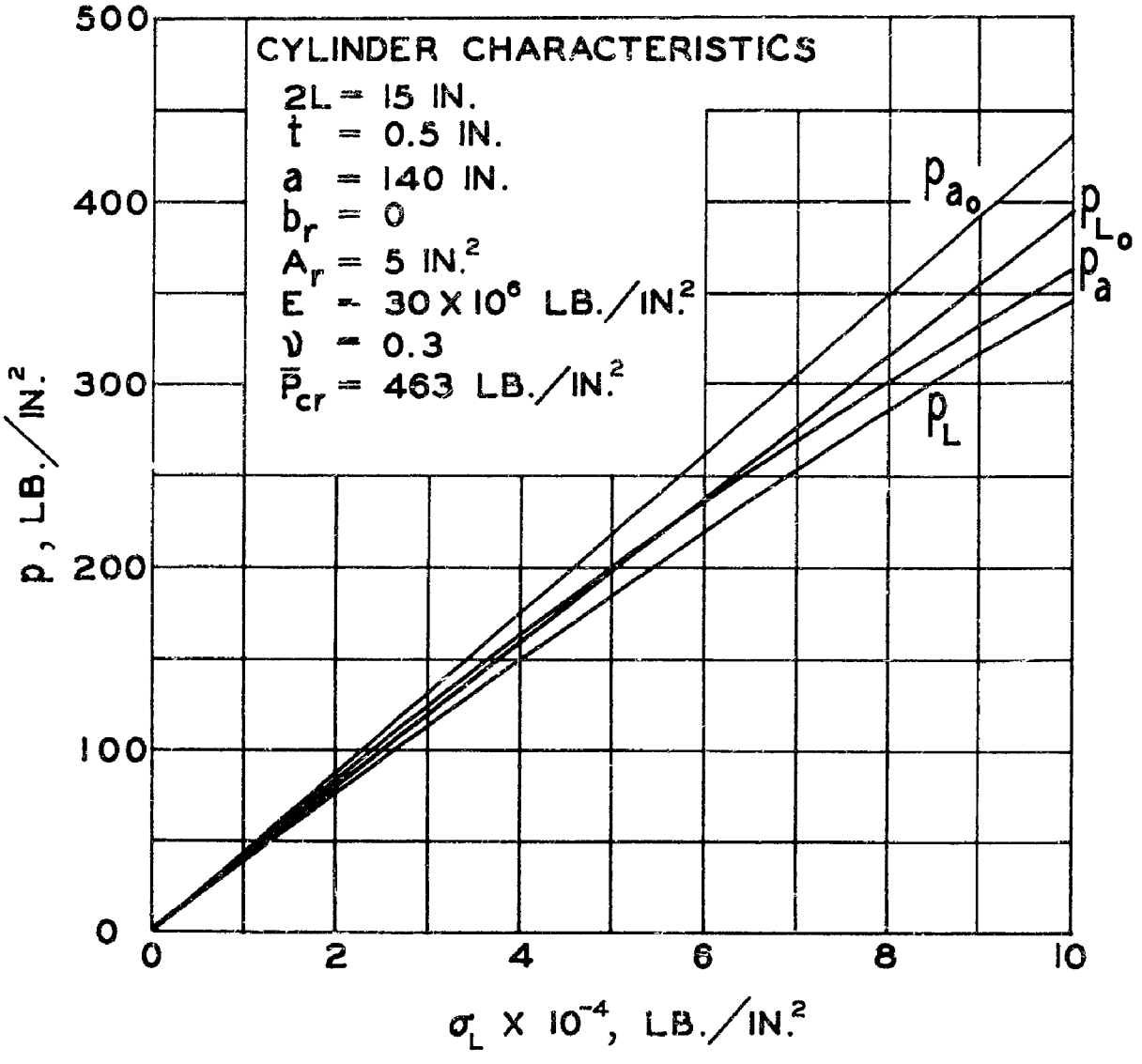

FIG. 3 COMPARISON AMONG MAXIMUM ALLOWAB AND ELASTIC LIMIT PRESSURES FOR CYLINDER NO. 1

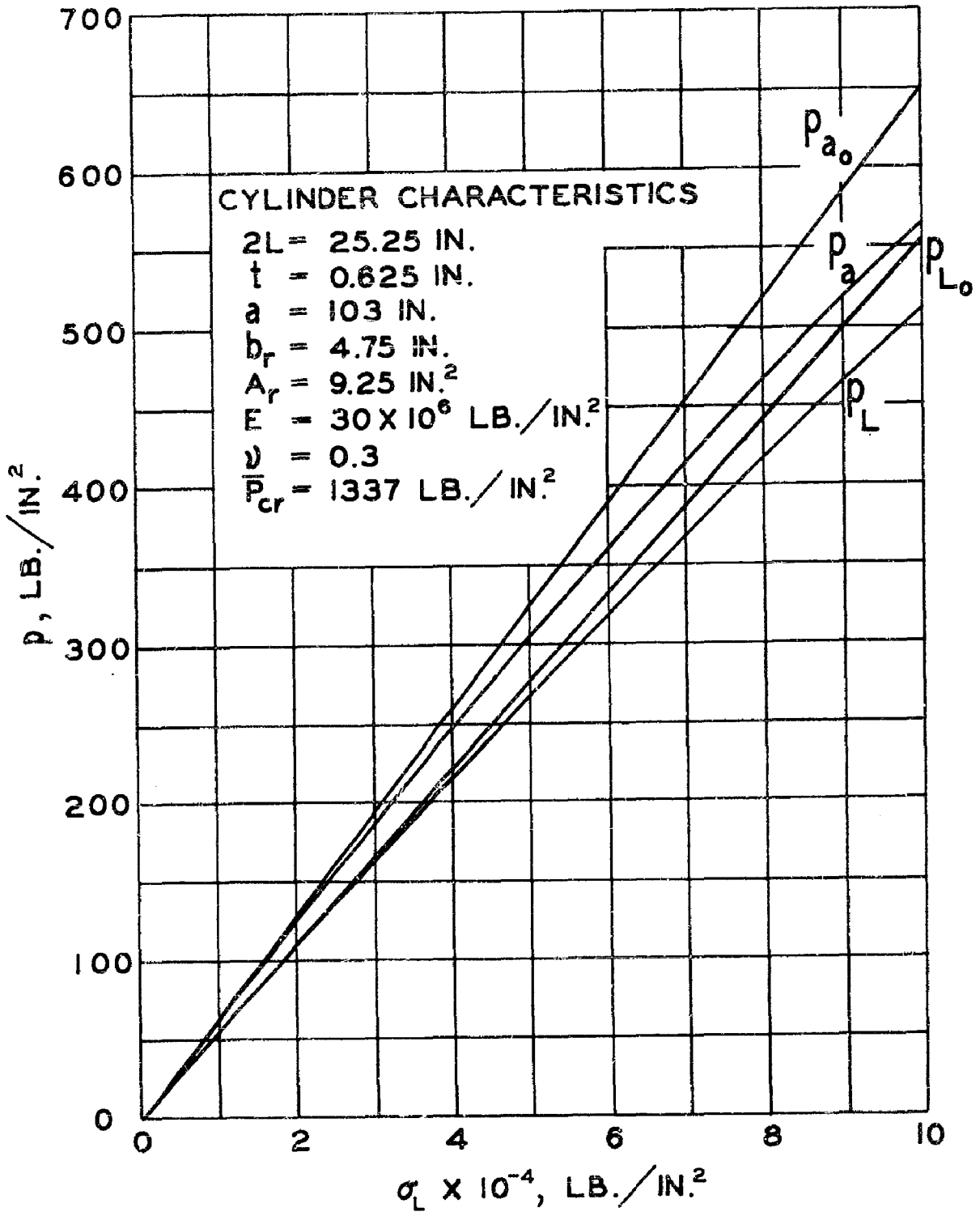

FIG. 4 COMPARISON AMONG MAXIMUM ALLOWAB AND ELASTIC LIMIT PRESSURES FOR CYLINDER NO. 2

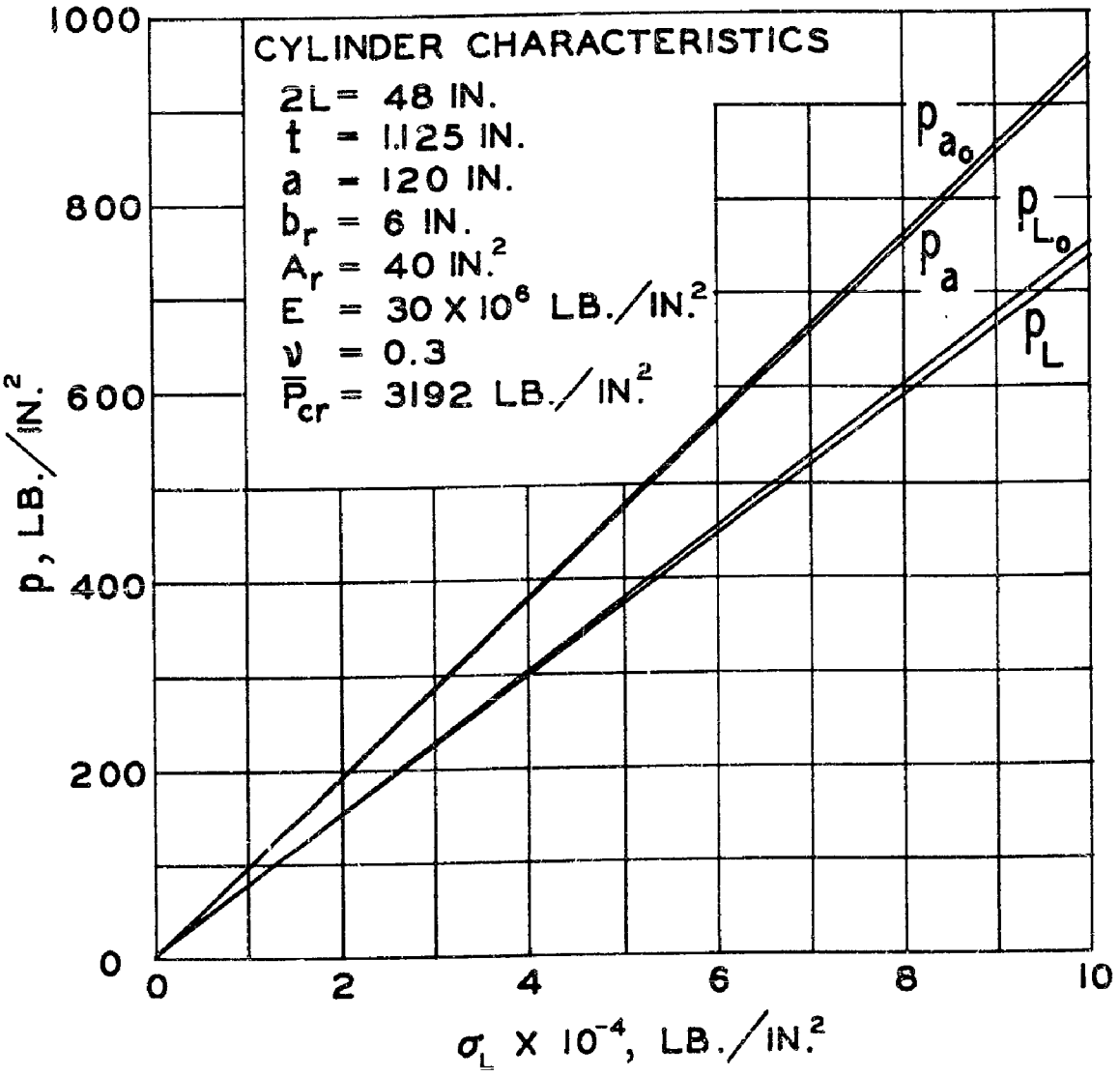

FIG. 5 COMPARISON AMONG MAXIMUM ALLOWABI
AND ELASTIC LIMIT PRESSURES
FOR CYLINDER NO. 3

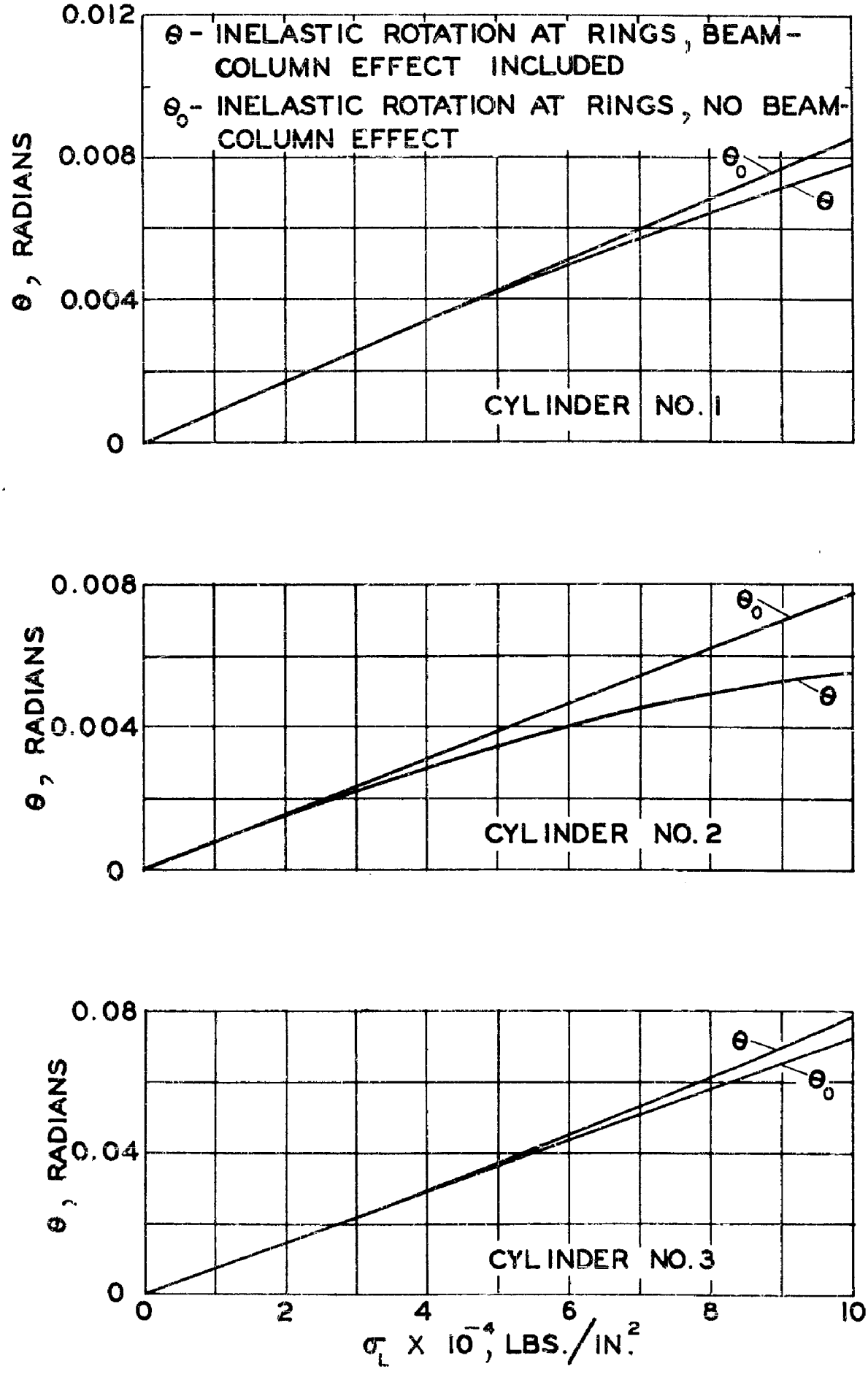

FIG. 6 COMPARISON AMONG INELASTIC ROTATION FOR CYLINDER NOS. 1, 2 & 3.

Reproduced by

DOCUMENT SERVICE CENTER

ARMED SERVICES TECHNICAL INFORMATION AGE

U. B. BUILDING, DAYTON, 2, OHIO

REEL-C 71951

A.T.I 2045631

"NOTICE: When Government or other dra
e other
ocur e
ponsibili
overnme
he s id
by impl
or any
conveying any rights or permis io
sell any patented invention that may in any

PLEASE RETURN THIS COPY TO:

ARMED SERVICES TECHNICAL INFORMATION AGENCY
DOCUMENT SERVICE CENTER
Knott Building, Dayton 2, Ohio

Because of our limited supply you are requested to return this copy as soon as it has served your purposes so that it may be made available to others for reference use. Your cooperation will be appreciated.

Released on DE

1.
2.
3.
4.
5.
6.
7.
8.

UNCLASSIFIE

AD-A800 030

STI-ATI-204 563 * UNCLASSIFIED 286050

Polytechnic Inst. of Brooklyn, N.Y. P20/11

ANALYSIS OF THE INELASTIC BEHAVIOR OF TRANSVERSELY REINFORCED CYLINDRICAL SHELLS UNDER HYDROSTATIC PRESSURE, by Joseph Kempner and V.L. Salerno. Aug 50, 22p, illus, tables. PIBAL rept no. 172. USN Contr. no. N6-onr-26303, Task Order 3.

Fluid Mechanics (9)
Hydrodynamics (4)

Structures, Shell
Pressure - Measurement
Hydrodynamics
* Elastic Shells
Elastic Properties

(Copies obtainable from ASTIA-DSC)
Proj. NR-064-167
MICROFILMED

UNCLASSIFIED

CFSTI, auth: ONR ltr, 13 Oct 69