DISTRIBUTION STATEMENT A. Approved for public release; distribution is unlimited.

Acquisition of Ice Thickness and Ice Surface Characteristics in the Seasonal Ice Zone by CULPIS-X during the US Coast Guard's Arctic Domain Awareness Program

PI: Mark A. Tschudi
University of Colorado
CCAR, 431UCB
Boulder, CO 80309 USA
phone: (303) 492-8274 fax: (303) 492-2825 email: mark.tschudi@colorado.edu

Award Number: N00014-12-1-0233

Also summarizes Award #: N00014-13-WX21324
NAVAIR PAX River, MD
PI: Cholwon Paek

LONG-TERM GOALS

- Teaming with the SIZRS effort (J. Morrison, Univ. Washington; PI) to:
  - Investigate new technologies, e.g., sensors, platforms and communications, for sustained operation and observation in the challenging Arctic environment
  - Improve understanding of the physical environment and processes in the Arctic Ocean

OBJECTIVES

- *What is the volume of sea ice in the Beaufort Sea SIZ and how does this evolve during summer as the ice edge retreats*? Recent observations suggest that the remaining ice in the Beaufort Sea is younger and thinner in recent years in part because even the oldest ice advected into the region does not survive the summer.
- *How does ice thickness relate to ice surface conditions, such as reflectance and ice surface temperature?* During summer, melting ice is covered extensively by melt ponds, which exhibit a reflectance considerably lower than the surrounding ice. Recent analyses have indicated that ponds on thinner ice are often darker, accelerating the ice-albedo feedback over thin ice in summer. During winter, leads and very thin ice are centers for ocean-atmosphere heat flux, so their fractional coverage and contribution to the surface-to-atmosphere heat flux need to be quantified.

APPROACH

We plan to utilize the US Coast Guard's (USCG) Arctic Domain Awareness (ADA) Program to fly our CULPIS-X (CU Laser Profiler Instrument – extended) and CULPIS-X2 packages over the Beaufort, Chukchi and Bering Seas. ADA utilizes the C-130 Hercules to fly once every two weeks from late

Report Documentation Page

Form Approved
OMB No. 0704-0188

Public reporting burden for the collection of information is estimated to average 1 hour per response, including the time for reviewing instructions, searching existing data sources, gathering and maintaining the data needed, and completing and reviewing the collection of information. Send comments regarding this burden estimate or any other aspect of this collection of information, including suggestions for reducing this burden, to Washington Headquarters Services, Directorate for Information Operations and Reports, 1215 Jefferson Davis Highway, Suite 1204, Arlington VA 22202-4302. Respondents should be aware that notwithstanding any other provision of law, no person shall be subject to a penalty for failing to comply with a collection of information if it does not display a currently valid OMB control number.

1. REPORT DATE **30 SEP 2013**	2. REPORT TYPE	3. DATES COVERED **00-00-2013 to 00-00-2013**
4. TITLE AND SUBTITLE **Acquisition of Ice Thickness and Ice Surface Characteristics in the Seasonal Ice Zone by CULPIS-X during the US Coast Guard's Arctic Domain Awareness Program**		5a. CONTRACT NUMBER 5b. GRANT NUMBER 5c. PROGRAM ELEMENT NUMBER
6. AUTHOR(S)		5d. PROJECT NUMBER 5e. TASK NUMBER 5f. WORK UNIT NUMBER
7. PERFORMING ORGANIZATION NAME(S) AND ADDRESS(ES) **University of Colorado,Colorado Center for Astrodynamics Research (CCAR),431UCB,Boulder,CO,80309**		8. PERFORMING ORGANIZATION REPORT NUMBER
9. SPONSORING/MONITORING AGENCY NAME(S) AND ADDRESS(ES)		10. SPONSOR/MONITOR'S ACRONYM(S) 11. SPONSOR/MONITOR'S REPORT NUMBER(S)
12. DISTRIBUTION/AVAILABILITY STATEMENT **Approved for public release; distribution unlimited**		
13. SUPPLEMENTARY NOTES		
14. ABSTRACT		
15. SUBJECT TERMS		

16. SECURITY CLASSIFICATION OF:			17. LIMITATION OF ABSTRACT	18. NUMBER OF PAGES	19a. NAME OF RESPONSIBLE PERSON
a. REPORT **unclassified**	b. ABSTRACT **unclassified**	c. THIS PAGE **unclassified**	**Same as Report (SAR)**	**10**	

Standard Form 298 (Rev. 8-98)
Prescribed by ANSI Std Z39-18

March to late November each year. The ADA C-130 flights originate in Kodiak, Alaska and overfly, among other areas, the Chukchi and Beaufort Seas, providing a unique opportunity to provide extensive, repeated observations of sea ice and the ocean in the SIZ.

CULPIS-X has been designed by a University of Colorado-Boulder student team, led by PI M. Tschudi, to fit into a USCG C-130 flare tube and operate in a near-autonomous mode. The package contains a laser altimeter/profiler, skin-temperature pyrometer, nadir-viewing spectrometer, snapshot and video cameras, pressure and temperature sensors, aircraft inertial measurement unit, a differential-capable GPS receiver, and payload computer. The CULPIS lidar and a few other components were previously deployed in the Arctic as a package called CULPIS [*Crocker et al.,* 2012]. The CULPIS-X instruments are designed to measure:

- distance to surface measured at 400 observations per second (CULPIS lidar)
- surface reflectance (hyperspectral radiometer)
- surface temperature (Everest infrared thermometer)
- digital snapshots and continuous video
- aircraft pitch, roll, yaw and rates of motion
- GPS position (basic position fix and carrier phase data)
- barometric pressure

The CULPIS-X package is undergoing a safety review process encompassing the following steps:

1. A CULPIS-X design has been provided to the evaluation vendor, the US Navy's Naval Air Systems Command (NAVAIR).
2. NAVAIR is using our CAD design model to integrate with a C-130 model and perform Computational Fluid Dynamics (CFD) simulations to evaluate the affect of air flow around CULPIS-X at nominal C-130 flight speeds. This evaluation is now underway.
3. The output of the CFD simulations will be input into a Finite Element Design (FED) model, which has been developed here at CU-Boulder and summarized in our Year 1 report.
4. The results from the FED analysis will be forwarded to CG ALC, where they will be analyzed and a final recommendation to fly CULPIS-X on the C-130 will be made.

A second instrument package, the CULPIS-X2, would be designed similar to CULPIS-X to fit inside of a second USCG C-130 flare tube. CULPIS-X2 would be flown concurrently with CULPIS-X and would contain the Ball Experimental SST Radiometer (BESST, Figure 1). The BESST microbolometer radiometer measures SST with a precision of 0.1 K and absolute accuracy of 0.2 K. The BESST has 200 pixels cross track for the 18 deg FOV, yielding a single pixel FOV of 0.09 degrees and has real-time calibration using two on-board blackbodies. Co-Investigator W. Emery leads the effort to work with Ball Aerospace on the BESST integration effort into CULPIS-X2.

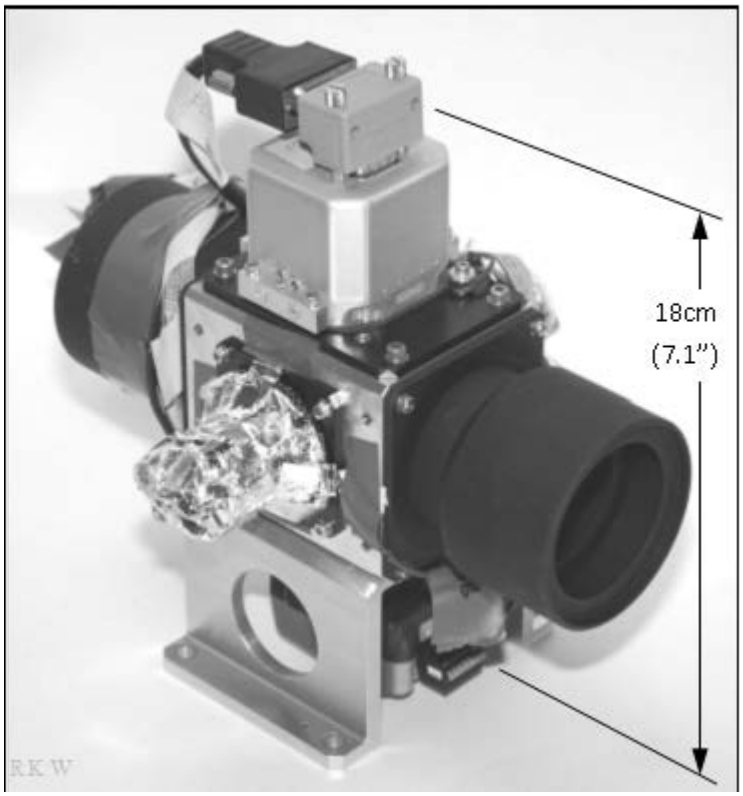

Figure1: BESST thermal radiometer. From Good et al. [2011].

In addition to the BESST, the latest generation of un-cooled imagers (microbolometers) has been identified for inclusion into the CULPIS-X2 package. This IR imager, supported by SIZRS co-funded investigators R. Lindsay and C. Chickadel (Univ. Washington), is a 640x480 pixel focal plane array microbolometer manufactured by DRS (model UC640), sensitive to wavelength of 8-14 microns. The imager fov is 40°, and its thermal sensitivity, quantified by Noise Equivalent Temperature Difference (NETD), is approximately 0.05 °K , which is sufficient resolution to detect typical surface temperature fields that vary by 0.1 °K or more. Camera dimensions are 2.5"x3.3"x2.1" and draws less than 2.5W. 14bit data is transmitted via standard Cameralink format. The camera housing is environmentally sealed and ruggedized, operational down to -40°C and thus suitable for CULPIS-X2 deployment during the ADA flights.

Figure 2: DRS (model UC640) IR imager.

With the delay in the build of a second package, C. Chickadel and R. Lindsay purchased a different, hand held IR camera, with the idea of going for a temporary internal mounting in the C-130. The camera would look out the rear cargo door while the C-130 drops other SIZRS instrumentation. This will acquire some data to start analyzing during the delay of this project.

WORK COMPLETED

The CULPIS-X package design is currently undergoing flight approval evaluation via a US Coast Guard (USCG) subcontractor, the US Navy's Naval Air System Command (NAVAIR) at Pax River, MD, with team members Cholwon Paek (PI), Shawn Woodson (NAVAIR Applied Aerodynamics Fixed Wing Team Leader), and Frank Taverna (NAVAIR Applied Aerodynamics and Store Separation Branch Head). NAVAIR has obtained the geometry for the CULPIS-X instrument package and has incorporated it into an existing C-130H CAD geometry as shown in Figure 1 below.

NAVAIR is generating an unstructured surface and volume grid suitable for CFD analysis. After preliminary discussions between the Coast Guard, NAVAIR, and the University of Colorado about what flight conditions would be of most interest to ensure the structural integrity of the CULPIS-X during abnormal flight conditions, the NAVAIR loads and dynamics group has developed a list of flight conditions at the extremes of the aircraft flight envelope, as was previously done on a similar effort for a P-3C aircraft with an externally mounted MX-25 EO/IR ball.

The set of flight conditions generated for the C-130H/CULPIS-X configuration (Table 1) determines the aircraft configuration (i.e. wing flap angles, operating engines, etc) and the number of CFD grids that need to be generated. Preliminary grid-generation, detailed surface mesh definition (Figure 2) and volume grid generation are currently underway.

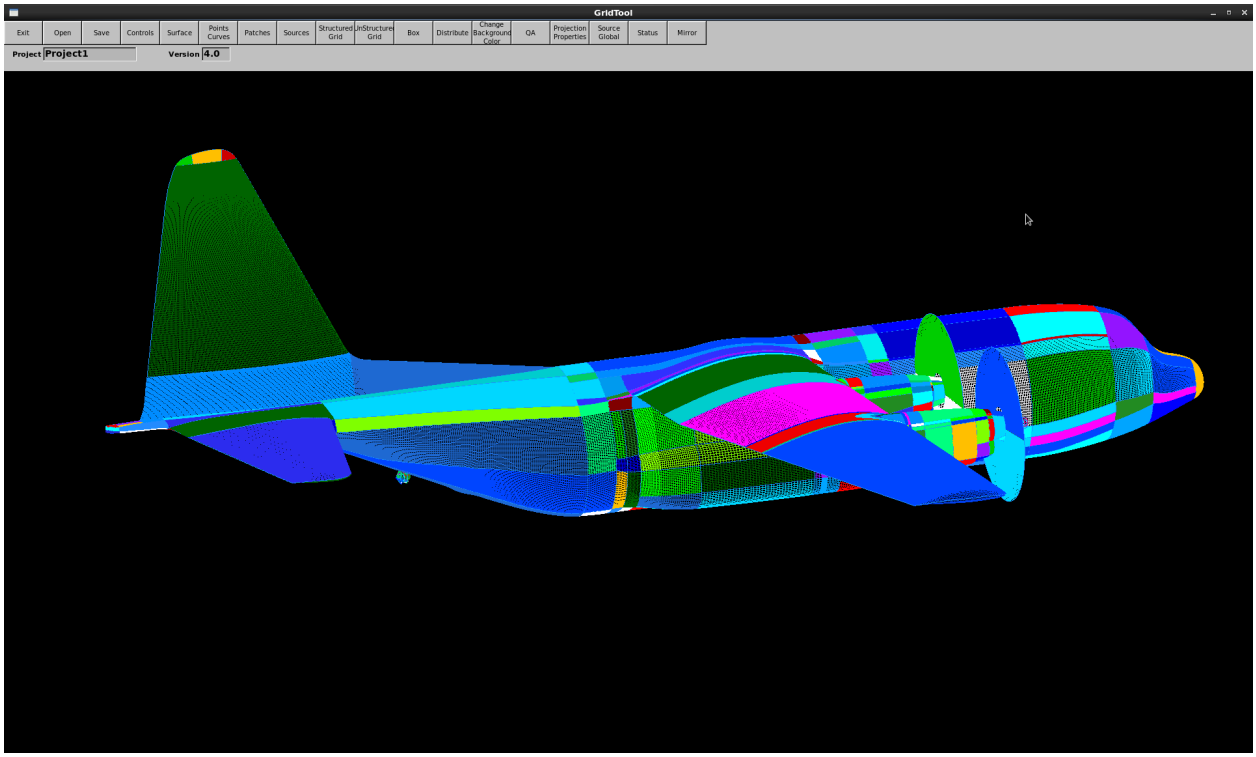

Figure 1. CAD definition of the CULPIS-X installed on a C-130H.

Table 1. CULPIS-X Flight Test Conditions selected by Loads group in NAVAIR.

Test point	Altitude ft	Speed KEAS	Mach	AoA deg.	Beta deg.	q_∞ psf	Flap deg.	Elevator deg.	Rudder deg.
1	0	172	0.2600	14.70	0	100	0	-19.9	0.0
2	0	202	0.3054	3.84	19.9	138	0	-0.6	-15.4
3	9950	320	0.5828	-2.26	0	347	0	8.7	0.0
4	200	197	0.2989	13.37	0	131	0	-13.0	0.0
5	100	320	0.4847	1.71	0	347	0	1.9	0.0
6	0	270	0.4082	0.85	10.36	247	0	0.8	-7.0
7	500	125	0.1907	14.70	19.9	53	18	-19.9	35.0

Elevator = TE down positive
Rudder = TE right positive

The test-point 7 is for the two-engines-out (port side) with the starboard side engines at full power and full rudder deflection.

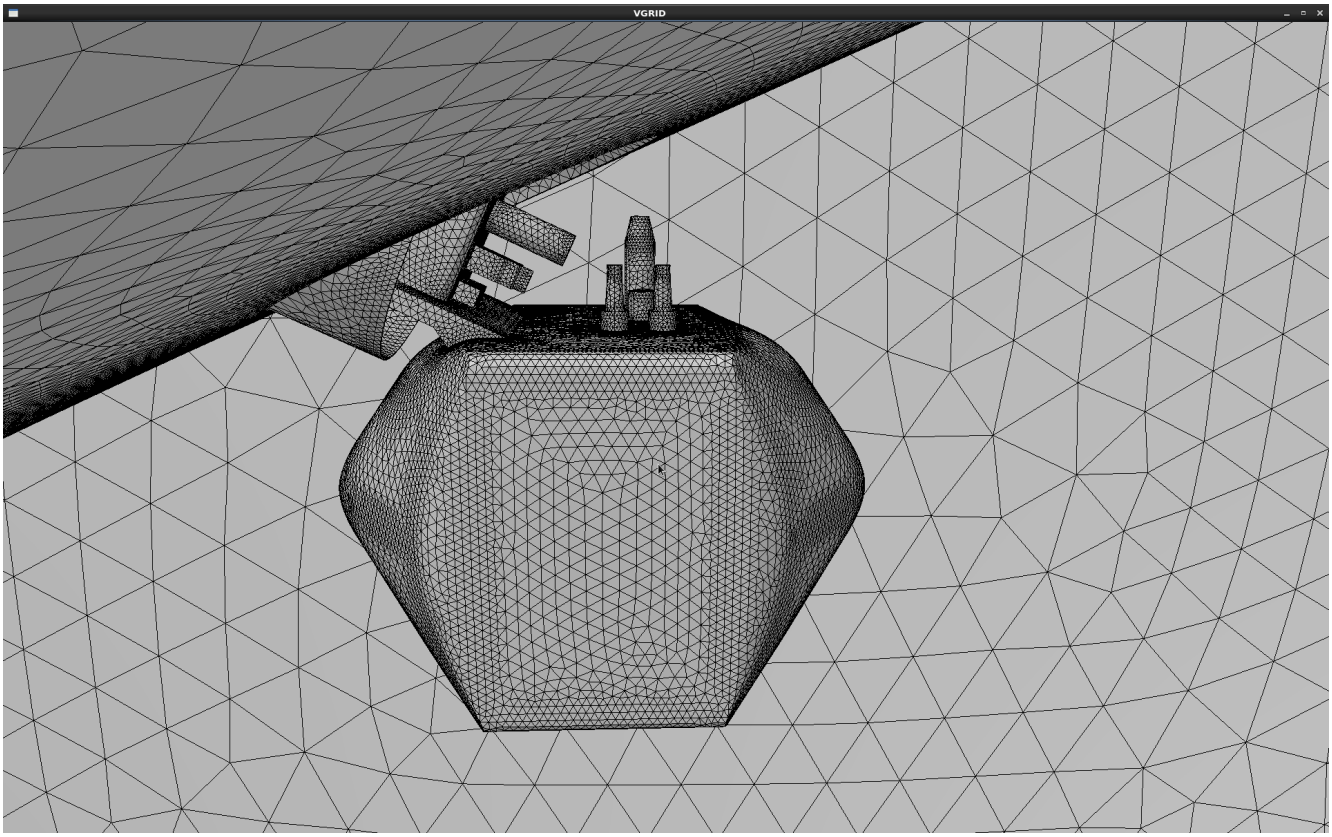

Figure 2. Preliminary Mesh from CULPIS-X installed in C-130 flare tube

As the safety review process proceeds, an upgrade to the CULPIS-X data logging system and component integration has been undertaken. This was deemed necessary due to some unfinished electronics work by the previous build team. A doctoral student at CU-Boulder, John Stark, has been hired to perform these tasks under the supervision of M. Tschudi. His summary of work on the system to date follows:

The current phase of development for CULPIS-X began with a top-level survey of the system. The goals of this survey were to gain familiarity with the system, develop some missing top-level system documentation, and establish a road map for what development still needed to be done. Documentation that was developed included system block and electrical diagrams, wire harness diagrams, and system usage instructions. During this initial survey of the system three major subsystems were identified that required further development; software, power distribution, and the video & still camera control system. The bulk of the development effort since the beginning of June of this year was focused on moving the software towards flight readiness.

In order to develop and test the system's software more effectively a 'flat-sat' configuration was developed. This configuration replicates all the electrical connections present in the final system but allows the components to be easily accessed on the workbench. Wiring harnesses were made that replicated those present in the flight configuration. By reproducing, rather than borrowing, the flight wiring harnesses the flat-sat configuration has the added benefit of allowing for rapid debugging of any future problems that may arise without having to disassemble the flight version in order to identify the problem.

With the system in a flat-sat configuration the development status of the software subsystems was assessed. A major result of this assessment was the decision to implement a redesign of the software architecture. The legacy CULPIS software was heavily interrupt driven but this architecture was found to be undesirable when interfacing to the new sensors as well as being difficult to debug. The new architecture will use a GPS time steered pulse per second, PPS, signal to drive the events occurring on each microcontroller. The advantages of this methodology include better compatibility with the new sensor package and improved field reliability. Additionally, it was found that the device drivers needed to be written for the new sensors and GPS board and the drivers for the legacy sensors be rewritten to support the new architecture.

Software development was continued by writing and testing the device drivers for the two new sensors; the Ocean Optics spectrometer and Everest IR temperature sensors as well as for the new data logging system. As the sensors had not been worked on previously it was found that several small modifications to the hardware were necessary in order to support their operation. Once these modifications were made and the device driver for the logging system finished a 24-hour test of the system was performed in order to verify the reliability of the new software. This test was completed successfully and the new drivers' performance verified.

Following the successful 24-hour test work commenced on interfacing to the new GPS/GLONASS board. No previous work had been done to interface this system in software to the main C&DH board necessitating a new driver be written for it. Currently the driver for this system has been written and testing of the new software begun.

Additional work performed included identification and design of the video & still camera control system and assessment of the status of the power distribution system. Previous work has been performed on both of these systems but further development of these systems has been postponed in favor of pushing the core software to completion.

Moving forward, once the software driver has been written and tested work will continue on implementing the new timing software architecture. This will begin by first interfacing in software the microcontrollers for the new sensors and the microcontroller controlling the new GPS board. Once this has been finished the drivers for the legacy sensors will be updated and their operation integrated into the overall architecture. Finally, the power distribution and still & video camera control system will be completed. Completion of these tasks is anticipated to be done by no later than the end of this calendar year.

The CULPIS-X instrument package structural package is close to completion, although a new team member will be hired to complete the package. The CULPIS-X package is lightweight (11.7 kg) with an aerodynamic structure built with materials (mostly carbon fiber) that are resistant to icing (Figure 3 – note that the Everest IR pyrometer is not visible in Figure 3b). Finishing of the structure will occur after the data logging and component integration upgrades have been completed.

Once NAVAIR completes CFD analysis of the CULPIS-X autoCAD design integrated with the C-130 model, the output will be used as input to a Finite Element Design (FED) model to determine the stress that CULPIS-X will exert on the flare tube and, in turn, the skin of the C-130 in proximity to the flare tube. This effort was initially completed at CU by graduate student P. Coffin, under the direction of Dr. K. Maute (CU Dept. of Mechanical Engineering), with approval from the USCG ALC. P. Coffin

built a CAD mockup of CULPIS-X during Year 1 and performed a preliminary analysis of the structural impact on the C-130 flare tube.

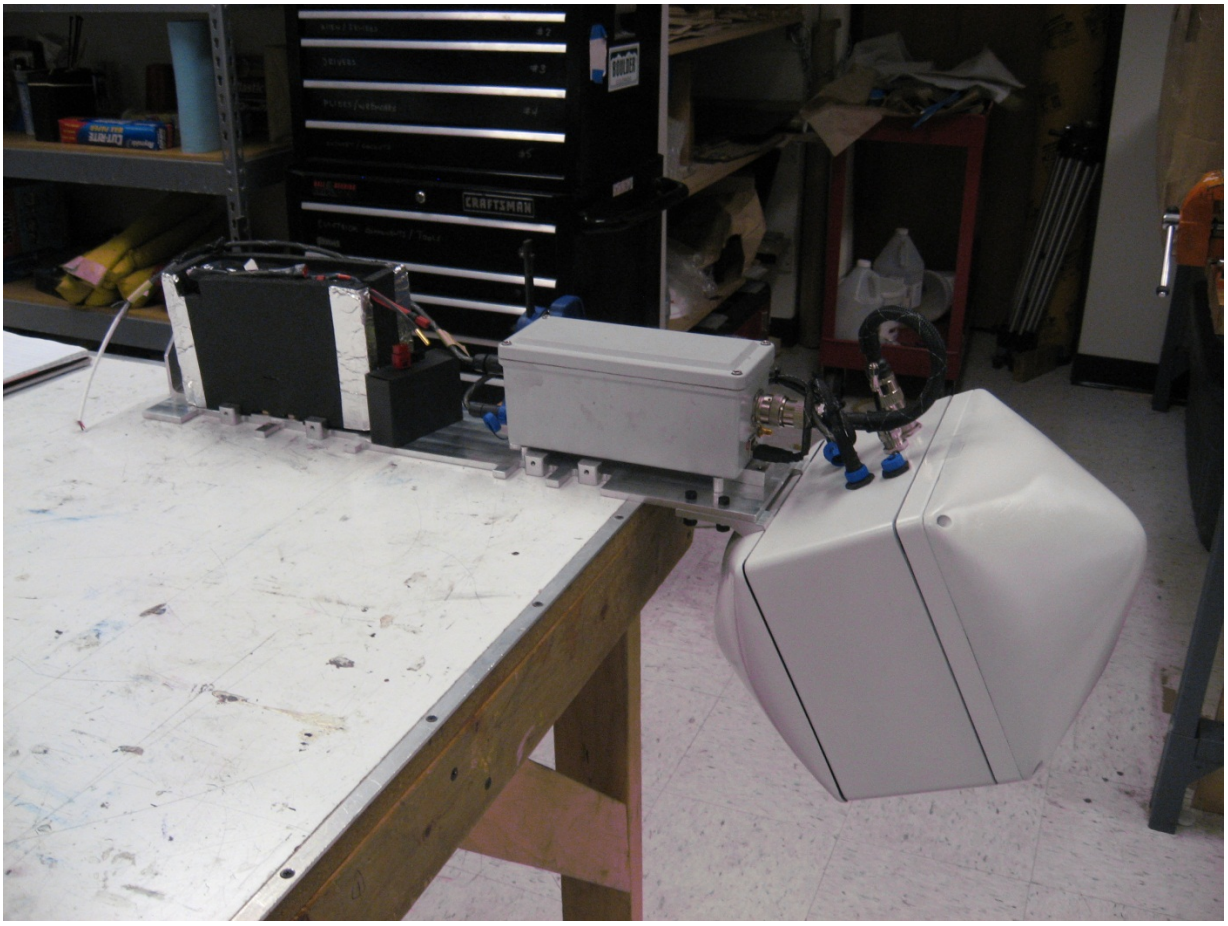

Figure 3a: CULPIS-X in CU-Boulder Lab. Sensor package on right, data acquisition box in middle, battery on left

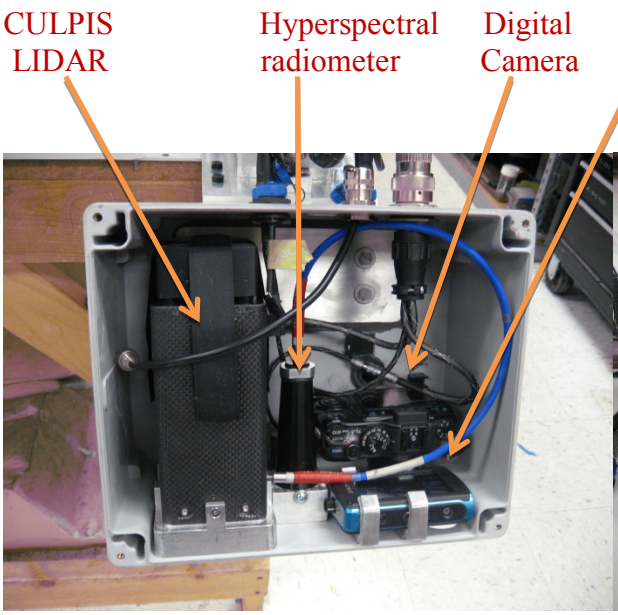

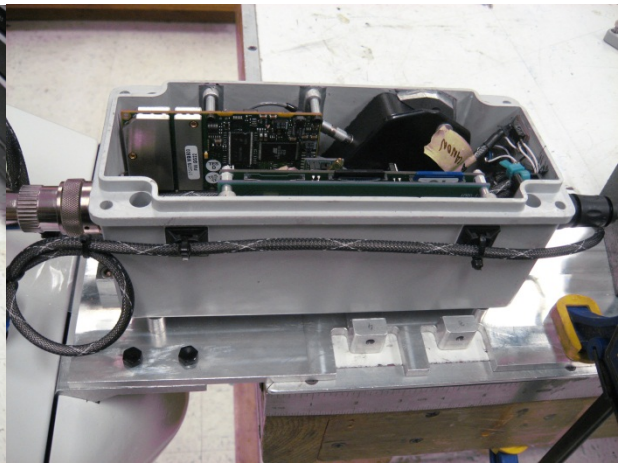

Figure 3b: CULPIS-X V2 sensor package ***Figure 3c: CULPIS-X V2 data acquisition box***

The BESST radiometer, to be deployed in CULPIS-X2, has already been built by Ball Aerospace – this build was a separate task and not funded in this effort. The availability of BESST has allowed us to plan for its power, weight, size and storage requirements for CULPIS-X2, although construction of CULPIS-X2 will not begin until we have approval to fly CULPIS-X.

Both the CULPIS-X and CULPIS-X2 are designed to each fit into one of the ten C-130 flare tubes and would fly concurrently, providing airborne measurements along designed flight segments during the ADA flights over the Beaufort and Chukchi Seas.

RESULTS

This project was delayed for several months in Year 2 due to the inability to transfer funds from CU-Boulder to the NAVAIR group. This process was monitored by M. Tschudi, and NAVAIR kept M. Tschudi informed as to the progress of this transfer, but ultimately NAVAIR's legal department could not reach an agreement with CU-Boulder's legal department. The following is an excerpt from a communication from NAVAIR on this topic on May 7, 2013:

"My attorney has reviewed the proposed changes to the standard CSA agreement. We cannot accept the changes to the indemnification / hold harmless clauses. I spoke with [this attorney] this afternoon about the conflicts between the State of Colorado laws and the federal statues we are using for the CSA. [The attorney] and I agreed that the CSA is not the appropriate contract vehicle to accomplish this effort. I would recommend ONR directly fund NAWCAD with a MIPR to accomplish this tasking. The MIPR funding process is relatively quick and is the appropriate funding vehicle to accomplish this tasking vice the Commercial Service Agreement."

At this point, ONR Program Management offered to directly transfer the funding for NAVAIR's testing under the separate award N00014-13-WX21324. After the funds were transferred, the evaluation process entered the work queue for NAVAIR, which needed to finish another project while being impacted by a reduced work schedule due to the sequestration. Work commenced on the package evaluation in August.

The BESST radiometer and another CULPIS-X component, the CULPIS laser, were flown successfully aboard a Univ. Alaska-Fairbanks ScanEagle UAS during the MIZOPEX project (http://ccar.colorado.edu/mizopex/) in early August, 2013. This deployment showed that BESST is capable of operating in polar environments, at least during the summer season. CULPIS has already flown in several polar deployments.

To review, the FED analysis for CULPIS-X, performed by P. Coffin at CU-Boulder in Year 1, found that stresses were well within reasonable limits for loadings up to 4g's. The largest values of stress on the assembly were 18.1% of the yield stress for the material. Principle stresses were also of similar magnitude. This first analysis was run without input from the CFD analysis to be performed by NAVAIR, but is encouraging.

IMPACT/APPLICATIONS

The initial FED analysis in Year 1 was encouraging towards providing a safe stress level on the C-130 flare tube and the aircraft skin in the vicinity of the flare tube attachment. However, input to the FED model from the current NAVAIR CFD analysis of the C-130 with CULPIS-X attached to the tube will produce the final modeling results with which USCG ALC can base their recommendation for deployment on a USCG C-130. Final decision of airworthiness will be made by the USCG HQ.

RELATED PROJECTS

SIZRS (J. Morrison, Univ. Washington; PI)

REFERENCES

Crocker, R. Ian, James A. Maslanik, John J. Adler, Scott E. Palo, Ute C. Herzfeld, and William J. Emery, 2012: A Sensor Package for Ice Surface Observations Using Small Unmanned Aircraft Systems. *IEEE Trans. Geoscience and Rem. Sens*., Vol. 50, No. 4, APRIL 2012.

Good, W., R. Warden, P. Kaptchen, T. Finch, and W. Emery, 2011: Absolute thermal radiometry from a UAS, presented at the AIAA *Infotech@Aerospace Conference*, St. Louis, MO.