STRATEGY
RESEARCH
PROJECT

The views expressed in this paper are those of the author and do not necessarily reflect the views of the Department of Defense or any of its agencies. This document may not be released for open publication until it has been cleared by the appropriate military service or government agency.

SINGLE ENGINEER SOLDIER FOR THE FUTURE ARMY

BY

COLONEL RANDALL J. BUTLER
United States Air Force

DISTRIBUTION STATEMENT A:
Approved for Public Release.
Distribution is Unlimited.

USAWC CLASS OF 1999

U.S. ARMY WAR COLLEGE, CARLISLE BARRACKS, PA 17013-5050

DTIC QUALITY INSPECTED 4

19990618 107

USAWC STRATEGY RESEARCH PROJECT

Single Engineer Soldier for the Future Army

by

Col Randall J Butler
United States Army

Col(Ret) Harold W. Lord
Project Advisor

The views expressed in this academic research paper are those of the author and do not necessarily reflect the official policy or position of the U.S. Government, the Department of Defense, or any of its agencies.

U.S. Army War College
CARLISLE BARRACKS, PENNSYLVANIA 17013

DISTRIBUTION STATEMENT A:
Approved for public release.
Distribution is unlimited.

ABSTRACT

AUTHOR: Col Randall J Butler

TITLE: Single Engineer Soldier for the Future Army

FORMAT: Strategy Research Project

DATE: 21 April 1999 PAGES: 48 CLASSIFICATION: Unclassified

The Army of the twenty first century will require changes to the existing combat and combat support structure to maintain flexibility and tailorability. Combining the engineer career fields (CMF) 12,51 and 62, to create a single engineer soldier to support the Army Force XXI concept and the future Army is a possible step. The concept of the single engineer soldier is not a unique one and the model of the Netherlands Army engineer is discussed. The proposal is not revolutionary but one of change in doctrine, employment and training. The end result is a strategic reshaping of the engineer force. Using the doctrine, training, leader development, organization, materiel and soldiers (DTLOMS) framework the concept of creating a multi-skilled engineer is developed. The new engineer structure is not a reduction in strength but an alignment of capabilities. Reliance on contracted sustainment engineering will be the norm. The single engineer soldier concept is a bold move forward to meet the anticipated requirements of the Army in the 21st century.

TABLE OF CONTENTS

ABSTRACT iii

List of illustrations vii

List of Tables ix

Single Engineer Soldier for the Future Army 1

Introduction 1

Netherlands Army Model 3

Doctrine 7

Training 13

Leader Development 16

Organization 18

Materiel 25

Soldier 26

Conclusion 29

ENDNOTES 33

BIBLIOGRAPHY 35

LIST OF ILLUSTRATIONS

Figure 1. Dutch Army Engineer Structure 6

Figure 2. Current Configuration 20

Figure 3. Conversion of CBT HVY BN 21

Figure 4. Proposed Configuration 22

LIST OF TABLES

Table 1. MOS Programs of Instruction 14

Table 2. NCO Training Programs of Instruction 17

SINGLE ENGINEER SOLDIER FOR THE FUTURE ARMY

> A good soldier, whether he leads a platoon or an army, is expected to look backward as well as forward, but he must think only forward.
>
> —General Douglas MacArthur

Introduction

Simply stated, our future Army will continue to recognize the soldier as its greatest capability and build our future operational concepts around quality soldiers and leaders.[1] This concise statement challenges the Army to structure our forces and doctrine on the soldier. The Army of the twenty first century will be smaller while the missions will be expanded and diverse. The environment will be challenging, unpredictable, and possibly changing rapidly. To respond to these future challenges the Army will change its doctrine, training, leader development, organizations, materiel and soldiers (DTLOMS).

To make changes will require a reassessment of existing combat and combat support structures as well as a determination of the relevance or utility of some branches/corps.[2] Maneuver commanders at all levels and in all types of operations (war, transition and MOOTW) want the force engineer to be a single source for mobility, countermobility and survivability. The focus of this paper will be to propose combining the engineer career management fields (CMF) 12, 51 and 62, to create a single engineer soldier to support the Army Force XXI concept and the

future Army. The unique skills of bridge crew engineers and topographic/soils/ survey engineers do not lend themselves to this type of consolidation and are therefore not discussed.

The premise of this consolidation is based on the continued relevance of the engineer on the battlefield for mobility, countermobility and survivability missions. The pace of movement, battle duration and the flexibility of units will change how military engineers are used on the battlefield. Mobility and agility concerns will drive the engineer force to be lighter and more versatile. The majority of sustainment engineering (requiring heavier special purpose capabilities) will therefore have to be contracted efforts (U.S. contractors or host nation assets).

Recruiting and retention of engineers are relevant to the CMF consolidation. Recruiting and retention of combat engineers is becoming tougher and tougher. The creation of a single engineer soldier will provide new opportunities and incentives for soldiers to want to be Army engineers.

The concept of a single engineer soldier is not a unique one. Some of our allies employ this concept currently with great success. Reviewing the engineer training and structure of the Netherlands Army from a DTLOMS perspective will structure the discussion and link it to our analytic framework.

The intent of this assessment is to be a conceptual analysis. A full analysis has not been done (specifically cost, equipment,

facilities and time). General and specific concepts for change are outlined to stimulate thought and evaluation. This concept is not revolutionary but one of change in doctrine, employment and training. The end result is a strategic reshaping of the force.

The early 1990's change in the Netherlands Army engineer structure will be the basis of comparison. Then using the DTLOMS framework the concept of the single engineer soldier will be developed.

Netherlands Army Model

After the Gulf War the Netherlands (Dutch) Army looked at how they should be structured for future conflicts (from peacekeeping to major war). The engineer component saw a need to change its structure to a more flexible, multi-functional basis.

Their vision of how a future war would be fought is important to review, as it is the foundation of their changes. They anticipate wars to be high intensity and quick in nature. The focus of engineer efforts will be upon combat skills, e.g., mobility and countermobility. The conflict will progress through three phases: war, transition, and military operations other than war. Combat skills are required during the first two phases while construction skills are required in the last two phases. The overlap in the transition phase provides the potential to combine skills to achieve greater synergy.

The transition phase will be marked by an infrastructure severely damaged or destroyed and the remains of intense battles. Even if civilian resources to include equipment, personnel and supplies are available to provide service support to troop units, the potential for lingering hostilities necessitates the use of military engineers. During this phase the focus of effort is on providing support and services for military forces, not on rebuilding the infrastructure for the civilians.

As the phase moves from transition to military operations other than war, civilian/contracted support is established to rebuild the civilian infrastructure and assume support to remaining military units. The Dutch Army sees contracting support for military units during the first two phases (war and transition) as high risk. Therefore, their plans and structure reflect methods to minimize this risk.

Their structure recognizes a need for both combat and construction engineer skills in initial phases. Yet, the cost to maintain construction skills over the long term (peace and war) is too high. This drove the Dutch engineers to implement a concept of multi-skilled engineers (double-hatted).

Their training cycle is similar to our basic and advanced individual training cycles. Every Dutch engineer goes through three distinct phases: initial training, combat engineer training, and construction training. Each phase is three months

in length with the construction phase possibly being four months depending upon the skill being acquired.

Unlike our current system of determining an individual's specialty at the beginning of his or her term of service, the Dutch Army only makes an initial assessment on who will be an engineer. Upon completing the initial training phase, the training cadre and the soldier determine in which construction skill he will receive training. This delay has the advantage of evaluating physical attributes in conjunction with mental ability. A disadvantage they have encountered is synchronizing the individual with the programmed skill training courses (i.e., timing and minimizing gaps between training).

Upon entry for a period of two and one half years, a Dutch engineer is promised the ability to acquire a construction skill to an industry proficiency level. This is a tough challenge that the engineer battalion commander is faced with during the soldier's remaining 21 months after training. As a soldier re-enlists, he continues to acquire training and progresses higher in industry recognized proficiency levels (much like our apprentice, journeyman and master levels).

NCO training continues to the Sergeant Major level. At the senior NCO levels they can apply for civil schooling typically two years in length. The end result is a certified skilled soldier capable of training subordinates to industry skill levels and an engineer expert capable of working on high level staffs.

The Dutch Army engineer structure is based on a flexible battalion design. The battalion is resourced/tailored with engineer companies to accomplish the mission. This is analogous to our brigade structure but one level down. There are two basic types of engineer companies, figure 1. The main engineer force is the mechanized/armor combat engineer company possessing a dual hatted mission and capabilities. The construction-oriented company is a specialized unit (low density). Typically there are three to four combat engineer companies for every one construction company in their force.

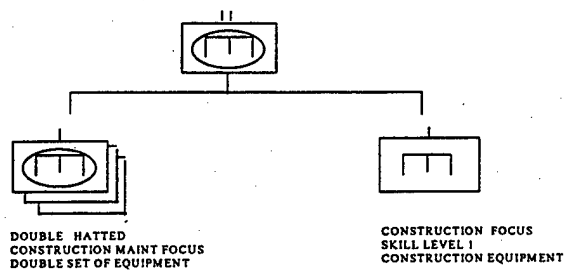

Figure 1. Dutch Army Engineer Structure

The construction skills of the mechanized/armor engineer company are focused on initial entry and basic maintenance capabilities. The construction-oriented company possesses a higher level of skill to perform expanded construction. The soldiers in this company receive initial training, minimal combat engineer training and expanded construction training (approximately six months) at entry. This is similar to our

current system of training the CMF51 and 62 series engineers. The retention of the construction company is based on their concern about contractor risk during the war and transition phases.

With the ability to acquire a certified industrial level skill, recruitment of soldiers within the engineer field is not difficult. Skill acquisition is a key recruiting factor, yet it becomes a retention obstacle. The Dutch system uses a two and one half-year initial enlistment period. This short period presents a challenge to fully train a soldier and utilize his skills. Proposals for longer entry enlistment periods have been made to retain skilled soldiers. The ability to obtain higher skill proficiency in exchange for continued service is one of their main retention themes.

Given this model, let me use the DTLOMS framework to develop a similar concept for the United States engineer called the single engineer soldier.

Doctrine

All Army forces must be rapidly deployable, highly survivable, lethal, agile, mobile, modular in design, and equipped to respond to the full range of military operations. Forces must be designed to enable rapid but flexible transition from war to OOTW (operations other than war) or vice versa. The commander must be given the assets to include flexible, versatile

organizations to dominate battle space.[3] To achieve this state of versatility our engineer doctrine, training and structure must change.

Doctrine has caused engineers to become too narrowly focused. Divisional combat engineer companies have lost much of the versatility and capability for which the engineers are justifiably famous.[4] The construction engineer too has narrowed his focus to sustainment tasks while discounting the importance of his combat role. This separation in roles is internal to the engineer corps as, a typical maneuver commander does not make a distinction between a combat engineer and a construction engineer; to him they are all "the engineers."

The engineer community has developed changes for the Army XXI Division, yet they have not been enough. We continue to operate and train in much the same doctrinal way as we have since the Vietnam War. This paradigm has been to separate combat engineering and construction engineering. Our combat focus has been oriented on mobility and countermobility while the construction focus has been one of sustainability and general support. The premise of this doctrine was based on fighting at the higher end of the spectrum of conflict. The concept was that the ability to fight a mid to high intensity conflict would translate to allowing us to fight and accomplish missions at the OOTW level.

The Army XXI Division is more compact, rapidly deployable, capable of sustaining a high operational tempo and organized in modules to be versatile and agile.[5] The engineer battalions within this structure are offensively (mobility) oriented providing responsive mounted obstacle breaching and emplacement. Due to this single focus engineer assets at echelons above division (EAD) are used to supplement the divisional battalion with increased obstacle reduction and counter-mobility capability, deliberate defensive operations, operations in restricted terrain, lines-of-communication (LOC) construction, and maintenance and repair in the brigade battlespace.[6] Frequently this additional support will exceed the battalion's command and control capabilities necessitating the addition of an engineer group or brigade headquarters within the Divisional structure.

A multi skilled engineer battalion based on the single engineer soldier would provide the maneuver commander increased flexibility and agility. This change in doctrine and structure would compliment the changes envisioned for the Army XXI Division. Additionally, the versatility of the new engineer battalion creates an increased number of units throughout the Army structure to perform the varied and increasing number of current missions.

A recent example of how this concept would work was seen in Operation Joint Endeavor (Bosnia). The three combat engineer

battalions (16th, 23rd & 40th Engr Bn) deployed as part of 1st Armored Division to Bosnia in 1996 demonstrated the flexibility and agility to assume both combat and construction missions. All engaged in construction activities from carpentry to road improvements supporting units in their sectors, yet doctrinally these missions exceeded their training and resources. The maneuver commander considered and expected his engineers to be multi-functional. Given the mission, the Battalions acquired tools and material to accomplish their tasks and used the ingenuity of any engineer for the expertise (supplemented by field manuals). This is a classic example of "watch what we do, not how we said we would do it."

Transitioning to the long-term construction effort, the Dutch army model completely replaces military engineer effort while the U.S. Army currently augments engineers with nonmilitary personnel to perform sustainment construction. The conduct of future conflicts will see unprecedented levels of support from the private sector.[7] By re-focusing our military engineering capabilities to combat and combat transition functions, the civil sector will assume more responsibility for sustainment and general engineering missions. As this occurs, military organizations will require additional training to support, integrate and control DA/DOD civilians, host nation support and civilian contractors. The command and control of this expanded

mission necessitates the need for an engineer group /brigade headquarters at division level.

Contractor and host nation support are integral to the strategic employment of our force. Our earlier doctrine and force structure has been based on conflict in an immature theater. This is not the situation today. The world infrastructure has developed to where host nation or outside contractor capabilities are available in almost every theater. With the pace of battle, even in high intensity conflict, we will require contractor and/or host nation support for logistical functions. Military units will remain responsible for mobility /countermobility operations but will not have time for major infrastructure upgrades or construction. Quick fixes and work arounds will be the emphasis for the Army XXI Division engineers necessitating multi-skilled units. As the battle transitions to operations other than war, contractor capabilities would replace military engineer units.

With contractor responsiveness and capabilities readily available, the question becomes; should the military retain construction engineer units. The single engineer soldier proposal and restructure does not support that retention. This is the paradigm shift: create and employ engineer units as we use them now and anticipate to use them in the future. While the old combat engineer battalions could do both, combat and

construction, the old construction battalions could not and would not due to doctrinal employment and training.

Joint doctrine assigns the Army the mission to provide military troop construction support to the Air Force overseas. This support includes; emergency repair of war-damaged air bases, repairing and restoring war damaged air bases beyond emergency repair, assisting with aircraft beddown, acquiring/improving/ replacing/constructing or expanding terrain and facilities for base development, and managing construction for repair and restoration of war damage.[8] These missions are assigned when the Air Force organic capability is exceeded. Under the single engineer soldier concept the horizontal missions are fully supportable and achievable utilizing the CSE units. Vertical missions (facilities and buildings) would be repaired to minimal standards with the full restoration or construction being accomplished by host nation or contracted support. These minimal standards need to be developed, coordinated and approved through the Department of Defense as we shift doctrine and structure.

Doctrine is how we expect to fight and function yet if we look at what is said and what is actually done, we do not follow engineer doctrine. Combat engineer units are utilized in construction (Operation Joint Endeavor or Task Force Hard Core from Ft Bragg supporting Haiti, summer of 1998[9]).

The British Army Royal Engineers have used the dual-role engineer with great success. Deployed to Bosnia-Herzegovina in

1992-1993 as part of the United Nations Protective Forces (UNPROFOR) they concluded:

> "It (the successful and pioneering tour as part of UNPROFOR in Bosnia-Herzegovina) has proved once again how important it is for the sappers to maintain artisan and construction skills and has signified a marked change in role from the Cold War for engineers based in Germany. Everyone has learnt a great deal and the experiences gained by all our tradesman will prove invaluable in the future."[10]

The role of the sapper has not diminished but his versatility has increased through the addition of a construction skill. Sapper units have been flexible in mind and attitude as well as in equipment and organization. Therefore, train combat engineers in construction skills and create the single engineer soldier.

Training

The soldier of the future Army will be more intelligent, skilled and well trained. Their capabilities are only limited by our ability to train and challenge them. We will be asking them to work independently, operate in isolated areas, and maintain assigned equipment without ready access to maintenance assistance or parts.[11] Combining the training of the CMF12, 51 and 62 series military occupational specialties (MOS) will stretch our soldiers to maximize their potential. While unit training is a critical component it is outside the scope of this discussion.

12B	6 weeks in length (~257 hrs)		62J	6 weeks / 4 days (~241 hrs)	
	Basic Demolitions	34.3 hrs		Common Engineer Training	39.7 hrs
	Accident Avoidance and Safety	9.8		Course Introduction	9
	Basic Mobility / Survivability	25.2		Operate Dump Truck	30
	Fixed Bridging	13		Operate a Motor Transport Vehicle	34
	Mobility / Countermobility	16		Operate Small Emplacement	45
	AVLB Operations	40		Operate Compaction and Air	84
	M9 Armored Cbt Earthmoving	38.8			
	Cbt Engineer FTX	72			
	Comp. Exam	8			
51B	7 weeks / 2 days (~266 hrs)		62E	8 weeks / 3 days (~312 hrs)	
	Common Engineer Training	39.7 hrs		Common Engineer Training	39.7 hrs
	Construction Fundamentals	42		Course Introduction	9
	Concrete and Masonry	88		Operate a Motor Transport Vehicle	64
	Framing and Roofing	85		Operate a Crawler Tractor	60
	Pre-Engineered Buildings	12		Operate a Motorized Scraper	40
				Operate a Scoop Loader	40
				Operate a Motorized Grader	60
51K	6 week / 4 days (~244 hrs)				
	Common Engineer Training	39.7 hrs			
	Course Introduction	10			
	Plumbing Tools and Materials	26.5			
	Waste Systems	61.3			
	Water Supply Systems	76			
	Plumbing Systems Maintenance	30.5	62F	6 weeks / 3 days (~234 hrs)	
				Common Engineer Training	39.7 hrs
51R	5 weeks / 5 days (~211 hrs)			Course Introduction	10.9
				Crane Maneuvering Operations	36
	Common Engineer Training	39.7 hrs		Clamshell Operations	29.3
	Course Introduction	12.7		Pile Driving Operations	26.8
	Exterior Electrician Phase	9.5		Hook Block Operations	27.4
	Interior Electrician Phase	149.2		Tractor Trailer / Dump Truck	64

Table 1. MOS Programs of Instruction
(One week of training is 32 hours of instruction/exercise)

Current engineer training by MOS is shown in Table 1.[12] Basic combat engineer training (12B) takes six weeks. A straight consolidation of the 51 series training into the 12 series could lengthen a soldier's stay in the training base by approximately six weeks. The additional time being a construction skill training phase. Looking for commonality of training, overlap and possible shortening of instruction could reduce the skill-training phase to four and one half weeks. Applying the same

process to combining the 62 series and 12 series training, the skill-training period could be reduced from approximately seven weeks to five and one half weeks

The concept of consolidating the training is based on a building block technique. The foundation starts with basic training and widens with combat engineer training. Once completed with the combat engineer training the soldier is selected for an engineer skill best suited to his aptitude and demonstrated abilities much like the Dutch model. Currently, a soldier is identified for an engineer skill only through the results of aptitude tests at the Military Entrance Processing Station (MEPS). While these tests are important, they cannot identify physical hands on abilities critical in the construction arena. Evaluation by training cadre during basic and combat engineering training phases would supplement aptitude results in determining in which skill area (carpentry, electrical, plumbing, equipment operator, etc.) the soldier would receive training.

This training concept steepens the learning curve for soldiers both in time and retained knowledge. While the costs of training will increase per soldier the benefits are considerable. These benefits might include higher engineer soldier retention, increased enlisted selection, increased skill proficiency, and increased manpower pool across units.

While time in the training base equates to increased costs, it should not be shortened merely for financial reasons. The

quality of training is critical for the individual (morale, retention, pride, and job satisfaction) and the unit (skill, retention, and capability). If training and job satisfaction produce retention then in the long term the increased training costs could be balanced.

The potential of each soldier needs to be tapped and challenged. A smaller Army does not have the luxury to maintain a manpower pool of untapped capability. We must exploit each soldier's abilities to the maximum. They have responded to the challenge (Bosnia). Training does not stop with the entering soldier but continues through the non-commissioned officer corps education system (NCOES).

Leader Development

The true backbone of the Army is the non-commissioned officer (NCO) corps. The current NCO education system develops NCOs in their MOS using a three phased system: primary leadership development course (PLDC), basic non-commissioned officer course (BNCOC), and advance non-commissioned officer course (ANCOC).

The BNCOC and ANCOC courses track the three MOSs 12,51,62 separately. There is a separate program of instruction for each MOS at each of the two levels (see Table 2). Commonality exists amongst these courses as should be expected. These overlaps simplify the process of combining the courses at each level.

The core curriculum for the single engineer NCO would be based on the 12B course. For the BNCOC level course the task becomes one of taking the 134 hours of vertical construction operations and 121 hours of horizontal specific training and reducing their corresponding tasks down to the vital tasks needed to perform combat/early entry construction. This same culling process would be required for the ANCOC level course.

12B	BNCOC 8 weeks / 3 days (~334 hrs)		12B	ANCOC 9 weeks / 2 days (~347 hrs)	
	Common Leader Training	85 hrs		Common Leader Training	83 hrs
	Demolitions	45		General Engineering	13.5
	Reconnaissance	29		Combat Engineering	18
	Mine Warfare	37		Determine Military Load	17.5
	Combat Construction	25		Fixed Bridging	18
	Critical Skills	23		Float Bridging	12.5
	Mandatory Training Annex	2		Computer Orientation/Battle Systems	15
	Combined Arms / Tactical Training	88		Mobility/Countermobility/Survivability	79
				Situational Exercise	88
				Mandatory Training	3
51H	BNCOC 9 weeks / 1 day (~376 hrs)				
			51H	ANCOC 6 weeks / 2 days (~278 hrs)	
	Common Leader Training	85 hrs			
	Common Engineer Training	66		Common Leader Training	83 hrs
	Vertical Construction Operations	134.5		Common Engineer Training	33.5
	Mandatory Training	5		Vertical Construction Operations	66.3
	Situation Training Exercise	86		Mandatory Training	9
				Situational Training Exercise	86
			62N	ANCOC 10 weeks / 1 day (~367 hrs)	
62N	BNCOC 10 weeks / 4days (~388 hrs)				
				Common Leader Training	83 hrs
	Common Leader Training	85 hrs		Common Engineer Training	51
	Common Engineer Training	96		Technical Training Track	64
	Horizontal Specific Training	121		Situational Training Exercise	88
	Field Training Exercise	86		Mandatory Training	81

Table 2. NCO Training Programs of Instruction

A suggested model would be a twelve (12) week course for both BNCOC and ANCOC instruction. Combat instruction would be eight weeks and nine weeks respectively. Vertical and horizontal

construction instruction would be two weeks each for BNCOC, and a week and a half each for ANCOC. The refinement of which tasks would be taught during the construction weeks needs in depth study.

Additionally, the senior NCOs should have the same opportunity for advanced education as the officer corps. The ability to obtain a technical engineering degree through a degree completion program needs to be explored. This would complement the utilities warrant officer program yet broaden the knowledge base throughout the engineer units via our senior NCOs. Following the Dutch engineer model this would also create opportunities to utilize their talents at higher level staffs. The use of advanced civil schooling and the acquisition of marketable skills could significantly aid in our efforts to retain quality soldiers.

The change in creating a trained, skilled single engineer soldier brings a change in the organizational structure of the engineer battalions.

Organization

The modularity and tailorability of the engineer units are critical to implementing the principles of Army XXI Division. Given the limitations of strategic lift and time, tailoring selects only those forces required for the mission. In 1958, the United States deployed forces to Lebanon for an OOTW type

mission. Major General David W. Gray, American Land Forces commander, recalled:

> "I believe we did err in one respect. Instead of a construction battalion we should have had a provisional company specially tailored to meet our specific needs... I believe our engineer combat battalion plus a provisional construction company and our airborne engineer company augmented by local labor would have been adequate."[13]

From war to OOTW, the varied demands will require a modular unit concept while utilizing both active and reserve units tailored to the mission.

The Army's blueprint of the battlefield, TRADOC Pamphlet 11-9, delineates the engineer missions that should be anticipated at the strategic, operational and tactical levels. A high predominance of these missions are horizontal (road building, airfield repair, site preparation) in nature.

The concept of a single engineer soldier is focused on ensuring engineer organizations remain relevant to the changing Army. The engineer will always have the primary functions of terrain visualization, maneuver engineering and force-support engineering.[14] How we organize to meet these missions is critical to being a flexible, agile force.

Under the Army XXI Division design, the engineer structure to include typical EAD assets is shown in Figure 2. As shown, the engineer unit structure at Division level is unchanged. This would also be the case for a Mobile Strike Force structure. The key EAD unit is the presence of a combat heavy engineer

battalion. The conversion of this unit to a combat engineer battalion and an accompanying combat support equipment company would be the organizational implementation of the single soldier concept.

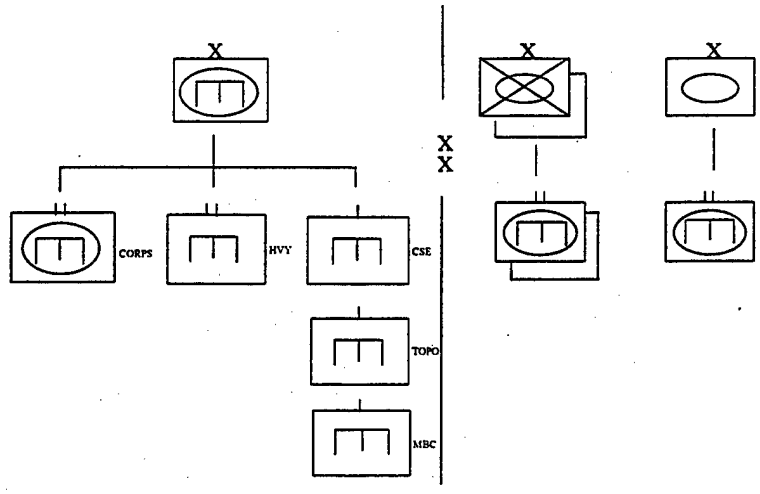

Figure 2. Current Configuration

Converting the construction engineer soldier into a multi-skilled combat engineer facilitates the elimination of the combat heavy battalion. As shown in Figure 3, a corps combat battalion and a combat support equipment company (CSE) are constituted from the assets of the combat heavy battalion. The type of corps combat battalion, mechanized or wheeled, would depend on a review of the theater CINC requirements and the Joint Strategic Capabilities Plan (JSCP). Personnel in aggregate numbers (regardless of MOS) from the combat heavy battalion are sufficient to make the corps combat battalion and CSE Company with a minimal plus up. The extensive amount of equipment for

the CSE Company would come from the entire combat heavy battalion, however a completely new corps combat engineer battalion set of equipment would be required.

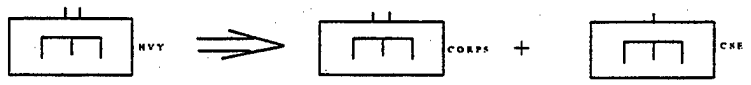

Figure 3. Conversion of CBT HVY BN

The creation of the additional CSE Company retains the horizontal construction assets. Adding this company at EAD increases flexibility in mission assignments and frequency of deployment. The ability of this unit to be modular and tailored to the mission provides the divisional engineer battalion increased construction capabilities and assets.

A conversion of this nature has been already accomplished. Within XXVIII corps, 20th Engineer Brigade, the 548th Engineer Combat Battalion (HVY) was inactivated in the mid 1980's and the 37th Engineer Combat Battalion (ABN) and the 362nd CSE company were created.

A final end state at EAD could look like Figure 4. The addition of a provisional engineer battalion headquarters is introduced where the corps engineer brigade does not have a topographic battalion or other intermediate headquarters to

control the four separate companies.

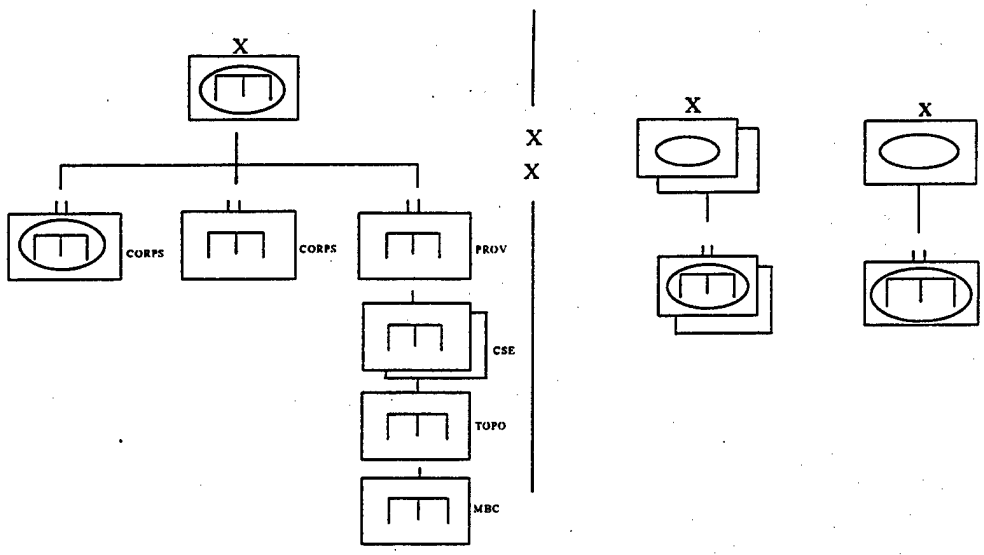

Figure 4. Proposed Configuration

The new structure is versatile, flexible, and modular in form like the Dutch engineer battalion model discussed earlier. The components allow for easy tailoring of force packages to meet mission requirements while utilizing the built-in versatility (skills) of the new engineer battalion. The additional combat engineer battalion at EAD allows the maneuver commander greater flexibility to reinforce his main effort or support other brigades that do not have assigned engineer units, e.g., cavalry regiment, DIVARTY or possibly DISCOM. The structure uses battalion and company sized units as the building components ensuring unit integrity and capability integration when attached to another unit. While the modularity of this structure provides

flexibility and versatility, dysfunction may occur if not properly planned and controlled.[15]

The intent is for military engineers to have the capability to conduct combat and combat transition functions following the Dutch model. A concerted effort must be made to identify the missions and functions that can be satisfied by the private sector, versus military forces.[16] The organization structural change necessitated by the MOS conversion requires the increased use of private contractors and host nation support for sustainment engineering missions.

Combat transition functions are defined as rough, functional construction capabilities to establish systems and facilities to support military personnel and operations. The establishment of these systems/facilities is intended to be within the capabilities of the new engineer battalion. These facilities may also provide benefit to the local populace or country.

The next higher level of work is the re-establishment or restoration of the primary infrastructure and facilities. This level of construction is beyond the capabilities of the new engineer battalions and therefore a function to be supported by host nation assets or contracted out. This would be in accordance with the new Army XXI operations doctrine.

During both the transition and peacekeeping phases risk is assumed for these contractor capabilities. This is a major concern of the Dutch army. Yet, the U.S. Army in the future

cannot afford to retain engineer forces that a contractor can provide quickly and that can produce a higher quality product. Challenges that induce risk include: contractors are in business to make profit, as non-combatants they require force protection and do not perform security missions, what happens if they default, wartime costs may outweigh peacetime savings, and applicability of Geneva Convention and status of forces agreements.[17] As the Army moves to a smaller, highly mobile and lethal force, the demands for sustainment functions will be assumed by the private sector while accepting prudent risk.

The current logistic civilian augmentation program (LOGCAP) is designed to provide contracted engineering and logistical support operations where no multilateral or bilateral agreements or treaties exist.[18] This resource has worked well for OOTW missions in the past and is envisioned to be a critical element in the future. As an operating program it has minimized the contractor risk accepted in OOTW operations.

The premise of the new engineer organization is not to reduce engineer strength or capabilities but to align and organize units to support the maneuver commander. These changes have minimal effect on the Army XXI Division engineer battalions but significantly change EAD engineer battalions. The re-organization will support future structure changes like the Mobile Strike Force concept. The structure is adaptable to fulfill a wide range of mission requirements from major theater

war (MTW) to OOTW, as it is based on a versatile, skilled engineer soldier. Changes in organization evolve into the need for materiel changes to support the force.

Materiel

A skilled single engineer soldier will require tools to perform his craft. Currently, tools are maintained at the squad and platoon level. The current variety and number of sets, kits, and outfits (SKO) would necessitate additional organic assets to move them. In the Army XXI Division design these haul assets have been reduced to increase mobility and survivability.

Since the engineer soldier will be performing rough, functional construction missions the need for the variety of tools can be drastically reduced. This in turn complements the planned reduction in haul assets. The reduction would be to the level of a small tool satchel for each soldier. This complement of tools would be compact and maximize simple multi-functional tools to save both weight and volume. No toolbox or chest would be used. The tools would be issued as personnel property upon completion of the skill-training phase, in the training base, and maintained through the unit supply system. Upon completion of service (ETS) the tools would be turned in and sent to the engineer school for re-issue.

Power tools and large tools would be resourced through a small redesigned and reconfigured pioneer electric tool trailer.

Unit of issue would be one per platoon with the prime mover being a small equipment excavator (SEE). As the SEE was removed from the combat engineer unit under the Army XXI Division design, it would be re-inserted at one per platoon. This is not seen to be an additional maintenance burden as the proper MOS mechanics are currently within the battalion. Additional construction assets, e.g., air compressor outfit, would come from the CSE Company when needed.

The individual soldier is the foundation of this concept. The unit's equipment will determine which skills and missions he will perform much like the Dutch engineer soldier.

Soldier

The true building block of any unit or structure is the soldier. The Army XXI Division engineer soldier must be a master of his basic engineer warfighting skill and must also possess general engineering skills. Today's force and the Army of the future will be called upon to perform nontraditional support missions, both foreign and domestic. This will require an unprecedented versatility not historically found in Army units.[19] This engineer versatility is achieved through the melding of combat engineer soldiers (CMF12) and construction engineer soldiers (CMF51 & 62) into a single engineer soldier.

This single engineer soldier maintains the relevance to the Army XXI Division and the Army of the future. His skills, versatility and agility transcend the spectrum of conflict. Revised doctrine will be the basis of his training. Thus the same soldier base will support the majority of all engineer units.

The Army today and in the future will be a volunteer, recruited force. The soldier will be smarter and more mature.[20] These factors will require us to look at how we recruit, assign and retain our soldiers.

The recruiting challenge is dramatically effected by the country's economy. There is a limited manpower pool of young men and women to draw from and they are continuously evaluating which opportunity or course of employment to pursue. Accessions into the 12B and 62E MOSs have been below the Army average by as much as 21%.[21] Our strategy has been to establish or increase enlistment bonuses, change the recruiting priority and add educational enlistment options, e.g., Army College Fund.

This strategy is valid but does not attack the main problem: why do young people not want to become military engineers. Combat engineer skills (demolitions, mines, and fortifications) are not marketable in the civilian sector. Those skills that are transferable (vertical and horizontal construction) are not developed to a recognized industrial standard.

The single engineer soldier concept is a start in making the engineer field desirable. Training each soldier in a construction skill provides a better inducement than just providing combat skills. Developmental programs like NCOES and civilian schooling need to be marketed as opportunities for progressive growth.

The assignment process upon enlistment into the Army has been a topic of tremendous debate. Aptitude tests like the Armed Services Vocational Battery (ASVAB) and the Armed Forces Qualification Test (AFQT) are used to determine which MOSs an applicant is suited for. The underlying purpose of the screening process is to reduce the risk that an investment will be made in persons who are unable or unwilling to perform their duty.[22]

In comparing the mean AFQT scores for combat and construction engineers they are less than two points apart (construction being higher than combat).[23] Looking at the make up of the aptitude composite used as the main guide for MOS assignment, similar components are used for both the combat and construction MOSs. While an analysis of the algorithm used to correlate these component scores is not in the purview of this discussion, it is sufficient to say that a new aptitude composite could be developed from the existing components establishing the single engineer soldier MOS.

While aptitude is an initial indicator for assignment, demonstrated physical skills need to be considered before a final

assignment is made. As discussed in the training section, physical skill abilities can be determined in basic and combat engineer training phases. Some physical skills are not discernible via written tests and therefore applicants should not be excluded merely on the basis of written tests.

The Army's ability to retain engineer soldiers focuses on money, education and pride. All are valid yet all can be enhanced by skill development. The engineer skills taught by the military need to have direct application to our mission, which is the current state. Where we fail is in not continually developing these skills through partnering with industry (skill certification), civilian schooling or job site training.

The main skill and focus of the single engineer soldier is and will be his combat skills, yet they are marginally utilized during peacetime and OOTW missions. Current and future missions will call for increased skills and versatility. This will develop an opportunity for retention marketing. The proposed structural change will make more units available to perform missions thus reducing operational tempo, while developing marketable skills and pride in being an Army engineer.

Conclusion

The single engineer soldier is a concept to make the engineers in the future Army more flexible and agile. Combining the skill of a combat engineer and a construction engineer will

require a change in how we approach accomplishing the mission. The change complements the changes being made in the Army XXI Division design and the Army After Next.

The engineer force is viewed from the outside as one organization but in actuality it is not. Changing our doctrine and training base will implement the single engineer soldier concept and clearly make the engineers one corps with many skills.

The conversion to a single MOS will require increased time and training. This investment in our soldiers will return benefits both in the field and in the organization. The balancing of training for combat and construction skills will be difficult but we must face the challenge to stay relevant. Training will challenge leaders and soldiers alike but will be professionally and personally rewarding.

Our structure will change from having combat and combat heavy (construction focus) battalions to combat battalions with combat support equipment companies in support. The changes are based at the soldier level. The units change only to efficiently utilize our soldiers and be modular in orientation to be flexible and agile on the battlefield. The versatility of the combat battalions will allow the commander to use a greater degree of ingenuity and initiative to accomplish his mission.

Equipping the single engineer soldier begins at the training base and adds minimal volume to the unit. Current inventory

equipment with some modernization (SEE and Pioneer Electric Trailer) is required. These additions to the MTOE structure would provide common large tools. It is felt that the addition of these pieces to the unit would not effect mobility or agility.

Recruitment and retention of engineer soldiers is vital. By training and developing marketable skills, the engineer profession becomes more desirable to soldiers. Continued skills education (military and civilian) for soldiers and leaders coupled with applicable experience will be a strong retention value.

The single engineer soldier concept is a bold move forward accepting risk (soldier skills and contracted support) to meet the anticipated requirements of the Army in the 21st century.

Word Count: 6008

ENDNOTES

[1] U.S.Army Training and Doctrine Command, Force XXI Operations, TRADOC Pamphlet 525-5(Ft. Monroe, VA: U.S. Army Training and Doctrine Command, 1 August 1994), 3-24.

[2] ibid, 4-6.

[3] TRADOC Pamphlet 525-5, Force XXI Operations, 4-6.

[4] Lou L. Marich, Engineer Field Squadron: New Engineer Organization for Operation Other Than War (OOTW)(Fort Leavenworth, KS, First Term AY94-95), abstract.

[5] Robert B. Flowers, Vern Lowrey, and Bruce Porter, "The Army XXI Division: Engineer Relevancy in the Age of Information Technology," Engineer, November 1998, 3.

[6] ibid, 4.

[7] TRADOC Pamphlet 525-5, Force XXI Operations, 3-14.

[8] Joint Chiefs of Staff, Joint Doctrine for Civil Engineering Support, Joint Publication 4-04(Washington, D.C.: U.S. Department of Defense, 26 September 1995), I4-5.

[9] John Barwell, "'Hard Core' soldiers build school in Haiti," Military District of Washington Pentagram, 9 October 1998, p.3.

[10] Marich, 39.

[11] Flowers, Lowrey, and Porter, "the Army XXXI Division," 6.

[12] U.S. Army Engineer School, Program of Instruction, Courses 713-51B10, 720-51K10, 721-51R10, 713-62E10, 713-62F10, 713-62J10, 12B10(Fort Leonard Wood, MO: U.S. Army Engineer School, n.d.).

[13] The U.S. Intervention in Lebanon, 1958: A Commander's Reminiscence, cited by Lou L. Marich, Engineer Field Squadron: A New Engineer Organization for Operations Other Than War(OOTW)(Fort Leavenworth, KS, First Term AY94-95), 17.

[14] Robert B. Flowers and Michael L. Fowler, "Engineer Vision 2010," Engineer, April 1998, 7.

[15] TRADOC Pamphlet 525-5, Force XXI Operations, 3-15.

[16] ibid.

[17] Norman E. Williams and Jon M. Schandelmeier, "Contractors on the Battlefield," Army, January 1999, 34.

[18] Department of the Army, Logistics Civil Augmentation Program (LOGCAP), Army Regulation 700-137, (Washington, D.C.: U.S. Department of the Army, 16 December 1985), 4.

[19] TRADOC Pamphlet 525-5, Force XXI Operations, 3-14.

[20] The ideas in this paragraph are partially based on remarks made by speakers participating in the Commandant's Lecture series.

[21] MSG Dumm, "CMF Review After Action Report," n.d.; available from <http://www.wood.army.mil/EPPO/Current%20Events/cnf.htm>; Internet; accessed 1 December 1998.

[22] Research on the Proportion of the Total Population which is Physically and Mentally Unfit for Military Service, Volume IA: Main Report, NOSC-7229, cited by Mark J. Eitelberg, Manpower for Military Occupations(Washington, D.C.: Human Resources Research Organization, 1988), 36.

[23] Mark J. Eitelberg, Manpower for Military Occupations (Washington, D.C.: Human Resources Research Organization, 1988),43.

BIBLIOGRAPHY

Ballard, Joe N., John W. Braden, James E. Corbin, Ralph M. Danielson, Richard V. Gorski and Brink P. Miller. A Combat Engineer Force Design for 1995. Carlisle Barracks:U.S. Army War College, 1985.

Barwell, John. "'Hard Core' soldiers build school in Haiti." Military District of Washington Pentagram, 9 October 1998, p.3,11.

de Ruiter, Andrew, Engineer Colonel Netherlands Army. Interviewed by author, 25 January 1999, Carlisle, PA.

Dumm, MSG. "CMF Review After Action Report." n.d. Available from <http://www.wood.army.mil/EPPO/Current%20Events/cmf.htm>. Internet. Accessed 1 December 1998.

Eitelberg, Mark J. Manpower for Military Occupations. Alexandria, VA: Human Resources Research Organization, 1988.

Flowers, Robert B. and Michael L. Fowler. "Engineer Vision 2010." Engineer, April 1998, 7-9.

Flowers, Robert B., Vern Lowrey and Bruce Porter. "The Army XXI Division: Engineer Relevancy in the Age of Information Technology." Engineer, November 1998, 2-6.

Joint Chiefs of Staff. Concept for Future Joint Operations. Washington, D.C.: U.S. Department of Defense, May 1997.

Joint Chiefs of Staff. Joint Doctrine for Civil Engineering Support. Joint Pub 4-04. Washington, D.C.: U.S. Department of Defense, 26 September 1995.

Lord, Harold W. <lordh@awc.carlisle.army.mil>. "Fwd: Can High Technology Bring Troops Home?" Electronic mail message to Randall Butler <butlerr@awc.carlisle.army.mil>. 4 January 1999.

Lowrey, Vern and Douglas Victor. "Force XXI Engineers: 1997 Advanced Warfighting Experiments." Engineer, April 1998, 16-18.

Macgregor, Douglas A. Breaking the Phalanx. Westport, CT:Praeger, 1997.

Marich, Lou L. Engineer Field Squadron: A New Engineer Organization for Operations Other Than War(OOTW). Ft Leavenworth: U.S. Army Command and General Staff College, First Term AY 94-95.

Meyers, Susan, Peter Malley, Harry Greene, Earl Hooper, Vern Lowrey, Dick Hornack, Doug Victor, Connie Welch, Al Waltmann, Darren Naumann, David Holbrook, Michael Rose, Darold McCloud and Charles Jackson. "ENFORCE Breakout Session Summaries." Engineer, July 1998, 13-20.

Perez, Mario, C.Kevin Williams and E.W. Chamberlain III. "Engineers in the 21st Century." Engineer, April 1998, 19-20.

Porter, Bruce J. A Revolution in Military Engineering, Carlisle Barracks: U.S. Army War College, 1997.

U.S. Army Engineer School. Program of Instruction: 12B10 Combat Engineer. Extracts. Ft Leonard Wood, MO: U.S. Department of the Army, n.d.

U.S. Army Engineer School. Program of Instruction: Carpentry and Masonry Specialist. Course 713-51B10. Ft Leonard Wood, MO: U.S. Department of the Army, 28 October 1998.

U.S. Army Engineer School. Program of Instruction: Crane Operator. Course 713-62F10. Ft Leonard Wood, MO: U.S. Department of the Army, 15 October 1998.

U.S. Army Engineer School. Program of Instruction: Construction Engineer Supervisor (ANCOC). Course 713-51H40. Ft Leonard Wood, MO: U.S. Department of the Army, 11 September 1998.

U.S. Army Engineer School. Program of Instruction: Construction Engineer Supervisor (BNCOC). Course 713-51H30. Ft Leonard Wood, MO: U.S. Department of the Army, 30 September 1998.

U.S. Army Engineer School. Program of Instruction: Electrician. Course 712-51R10. Ft Leonard Wood, MO: U.S. Department of the Army, 23 November 1998.

U.S. Army Engineer School. Program of Instruction: General Construction Equipment Operator. Course 713-62J10. Ft Leonard Wood, MO: U.S. Department of the Army, 8 October 1998.

U.S. Army Engineer School. Program of Instruction: Heavy Construction Equipment Operator. Course 713-62E10. Ft Leonard Wood, MO: U.S. Department of the Army, 25 September 1998.

U.S. Army Engineer School. Program of Instruction: Plumber. Course 720-51K10. Ft Leonard Wood, MO: U.S. Department of the Army, 15 October 1998.

U.S. Army Engineer School. Program of Instruction: TATS Combat Engineer (BNCOC). Course 030-12B30. Ft Leonard Wood, MO: U.S. Department of the Army, 1 July 1997.

U.S. Army Engineer School. Program of Instruction: TATS Combat Engineering (ANCOC). Course 0-12-C42. Ft Leonard Wood, MO: U.S. Department of the Army, 23 September 1997.

U.S. Department of the Army. Army Operational Support. Field Manual 100-16. Washington, D.C.: U.S. Department of the Army, May 1995.

U.S. Department of the Army. Blueprint of the Battlefield. Training and Doctrine Command Pamphlet 11-9. Ft Monroe, VA: U.S. Department of the Army, 27 April 1990.

U.S. Department of the Army. Decisive Force: The Army in Theater Operations. Field Manual 100-7. Washington, D.C.: U.S. Department of the Army, June 1995.

U.S. Department of the Army. Force XXI ... America's Army of the 21st Century. Louisiana Maneuvers Task Force. Ft Monroe, VA: U.S. Department of the Army, 15 January 1995.

U.S. Department of the Army. Force XXI Operations. Training and Doctrine Command Pamphlet 525-5. Ft Monroe, VA: U.S. Department of the Army. 1 August 1994.

U.S. Department of the Army. Logistics Civil Augmentation Program (LOGCAP). Army Regulation 700-137. Washington, D.C.: U.S. Department of the Army, 16 December 1985.

U.S. Department of the Army. Operations. Field Manual 100-5. Washington, D.C.: U.S. Department of the Army, June 1993.

U.S. Department of the Army. The Army in Multinational Operations. Field Manual 100-8. Washington, D.C.: U.S. Department of the Army, November 1997.

Williams, Norman E. and Jon M. Schandelmeier. "Contractors on the Battlefield." Army, January 1999. 32-35.