ARMY RESEARCH LABORATORY

Ballistic Analysis of Electrothermal-Chemical (ETC) Propellant

Gloria P. Wren
William F. Oberle
Sharon L. Richardson

ARL-TR-1245 December 1996

DTIC QUALITY INSPECTED 4

19970127 082

APPROVED FOR PUBLIC RELEASE; DISTRIBUTION IS UNLIMITED.

NOTICES

Destroy this report when it is no longer needed. DO NOT return it to the originator.

Additional copies of this report may be obtained from the National Technical Information Service, U.S. Department of Commerce, 5285 Port Royal Road, Springfield, VA 22161.

The findings of this report are not to be construed as an official Department of the Army position, unless so designated by other authorized documents.

The use of trade names or manufacturers' names in this report does not constitute indorsement of any commercial product.

REPORT DOCUMENTATION PAGE

Form Approved
OMB No. 0704-0188

Public reporting burden for this collection of information is estimated to average 1 hour per response, including the time for reviewing instructions, searching existing data sources, gathering and maintaining the data needed, and completing and reviewing the collection of information. Send comments regarding this burden estimate or any other aspect of this collection of information, including suggestions for reducing this burden, to Washington Headquarters Services, Directorate for Information Operations and Reports, 1215 Jefferson Davis Highway, Suite 1204, Arlington, VA 22202-4302, and to the Office of Management and Budget, Paperwork Reduction Project(0704-0188), Washington, DC 20503.

1. AGENCY USE ONLY *(Leave blank)*	2. REPORT DATE	3. REPORT TYPE AND DATES COVERED
	December 1996	Final, Jan 92 - Dec 92

4. TITLE AND SUBTITLE

Ballistic Analysis of Electrothermal-Chemical (ETC) Propellant

5. FUNDING NUMBERS

PR: 1L162618A1FL

6. AUTHOR(S)

Gloria P. Wren, William F. Oberle, and Sharon L. Richardson

7. PERFORMING ORGANIZATION NAME(S) AND ADDRESS(ES)

U.S. Army Research Laboratory
ATTN: AMSRL-WT-PA
Aberdeen Proving Ground, MD 21005-5066

8. PERFORMING ORGANIZATION REPORT NUMBER

ARL-TR-1245

9. SPONSORING/MONITORING AGENCY NAMES(S) AND ADDRESS(ES)

10. SPONSORING/MONITORING AGENCY REPORT NUMBER

11. SUPPLEMENTARY NOTES

12a. DISTRIBUTION/AVAILABILITY STATEMENT

Approved for public release; distribution is unlimited.

12b. DISTRIBUTION CODE

13. ABSTRACT *(Maximum 200 words)*

Firings performed under the alternate electrothermal-chemical (ETC) propellant materials contract with the Olin Corporation investigated a number of propellants using both conventional and plasma driven combustion. The objectives of this paper are to utilize the test series to examine: (1) ignition characteristics of plasma driven propellants; (2) pressurization rates of propellants under the influence of a plasma; (3) control of the gas generation rate in the gun with a plasma; (4) efficiency of the material in performing work on the projectile; and (5) comparison of the combustion characteristics of propellants with and without a plasma.

14. SUBJECT TERMS

electrothermal, electrothermal-chemical (ETC), propellant, interior ballistics (IB), closed chamber, burn rate

15. NUMBER OF PAGES

32

16. PRICE CODE

17. SECURITY CLASSIFICATION OF REPORT	18. SECURITY CLASSIFICATION OF THIS PAGE	19. SECURITY CLASSIFICATION OF ABSTRACT	20. LIMITATION OF ABSTRACT
UNCLASSIFIED	UNCLASSIFIED	UNCLASSIFIED	UL

INTENTIONALLY LEFT BLANK.

ACKNOWLEDGMENTS

The authors would like to thank John Knapton and Phuong Tran of the Propulsion and Flight Division for their review of the manuscript. The assistance of Dr. Arpad Juhasz in obtaining data is gratefully acknowledged.

INTENTIONALLY LEFT BLANK.

TABLE OF CONTENTS

		Page
	ACKNOWLEDGMENTS	iii
	LIST OF FIGURES	vii
	LIST OF TABLES	vii
1.	INTRODUCTION	1
2.	DESCRIPTION OF EXPERIMENTS	2
3.	IGNITION CHARACTERISTICS AND PRESSURIZATION RATES	3
4.	CONTROL OF GAS GENERATION PROCESS	8
5.	EFFICIENCY	11
6.	COMBUSTION CHARACTERISTICS/MODELING	12
7.	SUMMARY	16
8.	REFERENCES	17
	APPENDIX: INVERSE CODE RESULTS FROM SHOT 14	19
	DISTRIBUTION LIST	25

INTENTIONALLY LEFT BLANK.

LIST OF FIGURES

Figure		Page
1.	Capillary and propellant chambers	3
2.	Pressure histories for LGP1846 firings, shot OCB05	9
3.	Frames from a strand burner test of ungelled LGP1846 at 220 MPa	10
4.	Frames from a strand burner test of gelled LGP1846 at 11 MPa, 87 MPa, 120 MPa, and 160 MPa	10
5.	Pressure-time curves from firing OCB15	13
6.	Burn rate derived from inverse analysis of OCB14 compared to closed chamber data analysis	14
7.	Mass history for OCB14 based on inverse analysis of experimental data	15

LIST OF TABLES

Table		Page
1.	Experimental Gun Fixture Dimensions	2
2.	Details of the Firing Matrix	4
3.	Ignition Delay Times for Olin Firings	5
4.	Time Derivative of Breech Pressure Profiles for Olin Firings	7
5.	Ballistic Ratio	11
6.	Thermochemical Data for M43 and Form Function for Firing OCB14	14
7.	One-Dimensional Simulation of OCB14	16

INTENTIONALLY LEFT BLANK.

1. INTRODUCTION

In an electrothermal-chemical (ETC) gun, electrical energy in the form of a plasma is introduced into the combustion chamber containing an exothermic or endothermic material to produce the propelling gas used to accelerate the projectile. Interior ballistic (IB) models developed for the ETC gun over the past several years have attempted to keep pace with the diversity of designs, plasma injection schemes, and propellants proposed by the engineering community. However, the dynamic environment associated with the technology maturation has necessitated analysis of experiments in which the details of the plasma/propellant interaction and, in fact, the propellant properties, are not well known. Thus, the work completed under a U.S. Army contract with the Olin Ordnance Corporation to identify suitable ETC propellant materials with suitable performance, which also meet military requirements, is of interest to the IB modeler.

The objectives of the contract were: (1) to examine various chemistries available for alternate ETC propellants; (2) to develop viable alternate propellant candidates for ETC application; and (3) to attempt a positive impact on the ETC community by timely sharing of contract data (Olin Ordnance Corporation 1992). Within the context of these broad objectives, the research attempted to "provide a controlled baseline (fixed gun geometry and propellant loading) which would permit the comparison of the gas generation properties of plasma-ignited liquids and gels with solid propellant (SP) systems where the propellant burning surface area history is known" (McElroy, Greig, and Juhasz 1991). Propellants identified in this program were used by the ETC community in gun firings and for theoretical studies (Oberle and Wren, in press).

The controlled baseline consisted of 30-mm gun firings at GT-Devices, a subsidiary of General Dynamics Land Systems, using a single internal geometry. A number of propellants identified as potential ETC propellants were investigated under both conventional ignition and plasma ignition. Therefore, the objectives of this report are to utilize this test series to examine: (1) ignition characteristics of plasma-ignited propellants; (2) pressurization rates of propellants under the influence of a plasma; (3) control of the gas generation process in the gun by a plasma; (4) efficiency of the material in performing work on the projectile; and (5) comparison of the combustion characteristics of propellants with and without a plasma, through the use of inverse and one-dimensional models.

2. DESCRIPTION OF EXPERIMENTS

The gun firings were performed in approximately a cube law scaled, 155-mm artillery system (1,400 cm^3 in chamber and M864 projectile), as shown in Table 1. A detailed description of the experimental parameters can be found in McElroy, Greig, and Juhasz (1991).

Table 1. Experimental Gun Fixture Dimensions

Bore diameter	30-mm, smooth bore
Chamber volume	161 cm^3
Chamber diameter	3.175 cm
Chamber L/D	6.15
Travel	136.1 cm
Projectile mass	328.8 g

Plasma is injected axially from a single, rear capillary. To moderate the interaction of the plasma with the propellant, a thin-walled lexan tube with thickness of 0.01524 cm runs the length of the propellant bed from the plasma capillary to the rear of the projectile, as shown in Figure 1. Nominal internal volume of the lexan tube is approximately 2.7 cm^3. Propellant is loaded around the outside of the lexan tube.

The plasma capillary, also shown in Figure 1, consists of a 0.635-cm-diameter lexan tube with a length of 8.636 cm, together with a front and rear electrode. The pulsed-power system utilized consists of two separate banks of capacitors, each with a nominal storage capacity of 1 MJ, and a power pulse of 1.2 ms. Thus, power pulses of duration 1.2 ms and 2.4 ms could be delivered to the plasma generator.

The gun was also fired with a conventional ignition system consisting of an electric match and a charge of black powder mounted in the plasma capillary. Diagnostic instrumentation provided electrical, pressure, and projectile velocity measurements.

Candidate propellants for ETC application have generally been divided into two types: liquid/gel and solid. Liquid/gels offer the potential for high loading density and novel chemistries. Solids offer an increased level of control of the gas generation rate through the known propellant geometry. Both types

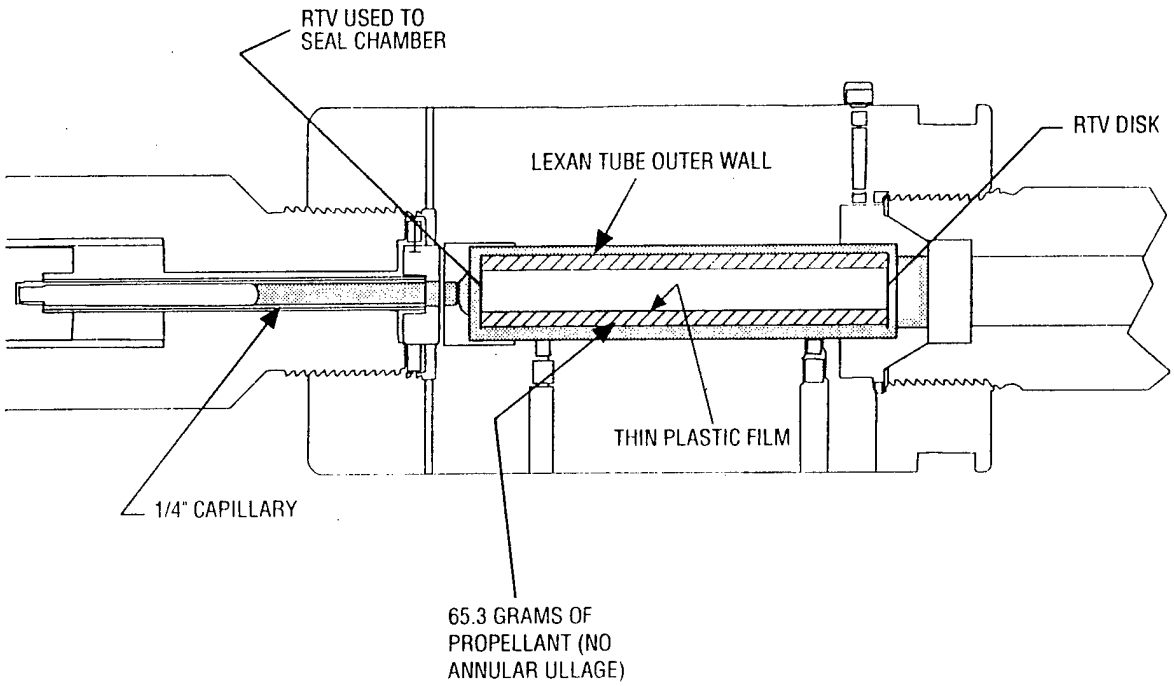

Figure 1. Capillary and propellant chambers.

of propellants were tested in the firing program. Since the propulsion community has experience with LGP1846, a homogeneous mixture of water and the nitrate salts HAN and TEAN, it was chosen as the baseline for the liquid/gel propellants in the regenerative liquid propellant gun. Ball propellant WC891, an oblate spheroid in geometry, produced by the Olin Ordnance Corporation, was chosen as the baseline SP. Detailed rationale for the choice of baselines is given in McElroy, Greig, and Juhasz (1991). Table 2 provides a listing of the firings in the testing program, together with pertinent information concerning each firing.

3. IGNITION CHARACTERISTICS AND PRESSURIZATION RATES

One of the primary objectives of the gun firings performed under the Olin contract was to determine the impact that the presence of a plasma would have on the combustion characteristics of the propellant or working fluid. Of special concern were the safety aspects of the plasma/propellant reaction. The main question relative to safety was whether the plasma would result in a "runaway" combustion of the propellant. Although several measurements could be utilized to address these questions, for this report, the time delay to the start of ignition and the time derivative of the breech pressure history are used.

Table 2. Details of the Firing Matrix

Shot No.	Propellant Type	Proj. Mass (g)	Prop. Mass (g)	Cart. Ener. (kJ)	Proj. Vel. (km/s)	Peak Power (MW)	Chbr. Press (MPa)
1	LP1846	328.6	65	37	0.76	65	579
2	LP1846	327.9	65	42	0.76	80	572
3	LP1846	328.0	65	43	0.31	42	48
4	LP1846	328.1	65	43	0.30	42	48
5	LP1846	328.7	65	80	0.72	80	186
6	LP1846	328.9	65	81	0.47	83	97
7	HPB1808	326.8	65	42	0.36	42	69
8	HPB1808	325.7	65	43	0.40	42	76
9	ET774	325.1	65	43	0.61	42	76
10	ET774	324.9	65	43	0.55	43	69
11	ET774	324.7	65	43	0.56	42	55
12	ET452	324.9	65	43	0.52	43	83
13	ET452	324.8	65	43	0.55	42	69
14	M43(30 mm)	324.3	65	41	0.57	39	117
15	M43(30 mm)	324.4	65	43	0.57	40	117
16	DINA X4747	325.4	65	41	0.56	39	110
17	TBB X4746	323.9	65	43	0.69	42	138
18	TBB X4746	328.9	65	N/A	N/A	N/A	N/A
19	TBB X4746	329.5	65	42	0.68	42	131
20	DINA X4747	323.3	65	40	0.56	38	110
21	AN/CYG	328.5	65	42	0.27	43	48
22	AN/CYG	328.7	65	41	0.25	40	41
23	AN/MEAN/H_2O	327.0	65	41	0.60	40	103
24	AN/MEAN/H_2O	328.7	65	42	0.60	42	83
25	AN/5-AT/H_2O	327.6	65	42	0.26	41	41
26	AN/5-AT/H_2O	329.1	65	44	0.30	44	48
27	X-4763 (JA-2)	329.0	65	40	0.66	37	159
28	X-4763 (JA-2)	329.0	65	40	0.64	35	152
29	X-4768 (JA-X)	328.8	65	40	0.69	35	165
30	X-4768 (JA-X)	329.3	65	40	0.70	37	172
31	X-4764 (JA-2)	328.4	65	40	0.63	38	152
32	X-4764 (JA-2)	327.9	65	41	0.63	37	152
33	COMPACTED INERT PLASTIC	330.0	121	43	0.27	42	69
34	COMPACTED INERT PLASTIC	329.7	120	43	0.27	43	69
35	LOOSE FILL INERT PLASTIC	329.0	90	44	0.25	45	62
36	LOOSE FILL INERT PLASTIC	330.1	90	42	0.25	39	55
37	LOOSE FILL INERT PLASTIC	329.2	90	83	0.37	85	97
38	LOOSE FILL INERT PLASTIC	330.1	90	82	0.36	83	97

Table 3 presents the time to ignition (time of initial pressure rise) for each of the 38 Olin firings (data for shots 7, 18, and 21 were incomplete, and therefore are not included) together with the propellant utilized in the firing. As can be observed from the table, for the same material, the ignition time delays are extremely close, with an average delay of 0.35 ms. For standard SP firings, the ignition delay exhibits much greater variability with delays of several milliseconds not being uncommon. Thus, using a plasma as the igniter appears to provide a more uniform ignition event for the propellants and configurations utilized in the firing program.

Table 3. Ignition Delay Times for Olin Firings

Shot No.	Propellant	Time of Initial Pressure Rise (ms)
1	LGP1846/XM46	0.36
2	LGP1846/XM46	0.24
3	LGP1846/XM46	0.28
4	LGP1846/XM46	0.24
5	LGP1846/XM46	0.20
6	LGP1846	0.17
8	N_2H_4/HN	0.28
9	HAN/DEG/H_2O	0.26
10	HAN/DEG/H_2O	0.30
11	HAN/DEG/H_2O	0.29
12	HAN/NMP/H_2O	0.26
13	HAN/NMP/H_2O	0.32
14	M43	0.24
15	M43	0.24
16	DINA/NC	0.23
17	RDX/NC/NG	0.30
19	RDX/NC/NG	0.33
20	DINA/NC	0.25
22	AN/Cyanoguanidine	1.68

Table 3. Ignition Delay Times for Olin Firings (continued)

Shot No.	Propellant	Time of Initial Pressure Rise (ms)
23	AN/MEAN/H_2O	0.27
24	AN/MEAN/H_2O	0.30
25	AN/5AT/H_2O	0.94
26	AN/5AT/H_2O	0.82
27	JA2	0.24
28	JA2	0.30
29	JA-X	0.23
30	JA-X	0.30
31	JA2	0.27
32	JA2	0.27
33	Compacted CAB	0.87
34	Compacted CAB	0.12
35	Loose CAB	0.23
36	Loose CAB	0.20
37	Loose CAB	0.16
38	Loose CAB	0.16

Table 4 lists the values for the maximum time derivative of the breech pressure history (dP/dt) for the firings. As points of reference, a standard 120-mm tank round has a dP/dt of approximately 0.4 million MPa/s (MMPa/s) and a 155-mm artillery round about 0.09 MMPa/s. As shown in Table 4, except for firings 1 and 2, the values of dP/dt are within the tank and artillery ranges for dP/dt. As with the ignition times, the values of dP/dt for firings utilizing the same material are very close. Therefore, it appears that although the plasma results in more uniform time of ignition, the actual combustion characteristics, as measured by the pressurization rates, are not radically altered. That is, "runaway" combustion of the propellant does not occur, at least in the configuration used during the firing program. However, this is not meant to imply that the plasma has no effect on the propellant burn rate characteristics.

Table 4. Time Derivative of Breech Pressure Profiles for Olin Firings

Shot No.	Propellant	Derivative (MMPa/s)
1	LGP1846/XM46	3.820
2	LGP1846/XM46	3.670
3	LGP1846/XM46	0.134
4	LGP1846/XM46	0.084
5	LGP1846/XM46	0.327
6	LGP1846/XM46	0.121
8	N_2H_4/HN	0.151
9	HAN/DEG/H_2O	0.124
10	HAN/DEG/H_2O	0.133
11	HAN/DEG/H_2O	0.119
12	HAN/NMP/H_2O	0.122
13	HAN/NMP/H_2O	0.137
14	M43	0.117
15	M43	0.136
16	DINA/NC	0.108
17	RDX/NC/NG	0.129
19	RDX/NC/NG	0.123
20	DINA/NC	0.153
22	AN/Cyanoguanidine	0.113
23	AN/MEAN/H_2O	0.150
24	AN/MEAN/H_2O	0.180
25	AN/5AT/H_2O	0.338
26	AN/5AT/H_2O	0.272
27	JA2	0.198
28	JA2	0.186
29	JA-X	0.161

Table 4. Time Derivative of Breech Pressure Profiles for Olin Firings (continued)

Shot No.	Propellant	Derivative (MMPa/s)
30	JA-X	0.183
31	JA2	0.179
32	JA2	0.172
33	Compacted CAB	0.075
34	Compacted CAB	0.218
35	Loose CAB	0.119
36	Loose CAB	0.112
37	Loose CAB	0.203
38	Loose CAB	0.228

4. CONTROL OF GAS GENERATION PROCESS

The gas generation rates of SP are usually expressed in IB codes as pressure-dependent burn rates (cm/s) combined with form functions to account explicitly for the geometry of the individual grains. The burn rate for SP is generally obtained from closed chamber experiments in which a sample of the propellant is ignited and burned and the resulting pressure history analyzed to provide the burn rate. The analysis is possible since SP grains have a known surface area. However, the analysis of liquid/gel propellant gas generation rates is more complicated since the surface area is a function of hydrodynamic processes. In addition, a representation of surface regression is not applicable if the material reaches supercritical conditions. In fact, physically accurate models of the liquid propellant ETC (LPETC) gas generation rate may require the explicit treatment of the stripping of liquid droplets from a contiguous body of liquid followed by surface regression of the droplets. One such formulation has been developed for the ETC process by Kuo et al. (1990) and Kuo and Cheung (1995).

For the test program, the liquid propellant LGP1846 (XM46) was fired in the gun configuration discussed previously as a baseline for the liquid/gel propellants tested. Pressure histories for an LGP1846 firing is shown in Figure 2. Unfortunately, as illustrated in Figure 2, it appears that the hydrodynamics

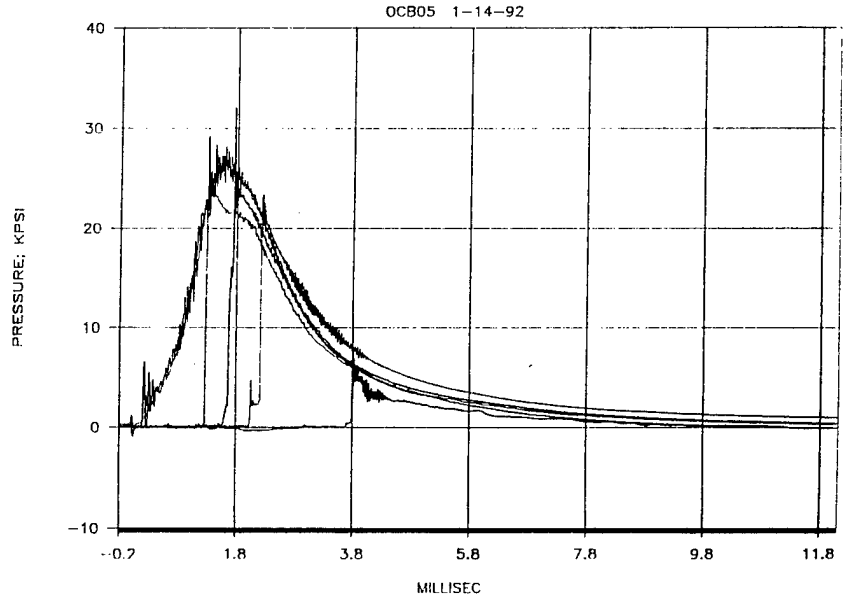

Figure 2. Pressure histories for LGP1846 firings, shot OCB05.

of the formation and growth of the Taylor cavity eliminates the utility of these firings as a baseline for evaluating liquid/gels as candidates for ETC application.

Past experience gained in obtaining data on the burn rate of LGP1846 may be useful for obtaining information on liquid/gel propellant burn rates. Several years ago, better measurements of the burn rate of LGP1846 were needed in RLPG gun codes. A series of closed chamber firings in which the liquid propellant was contained in a test-tube-shaped holder were performed, and the data were analyzed with a closed chamber analysis program (Oberle and Wren 1991). The closed chamber test setup was designed to minimize the impact of hydrodynamic forces. The computed burn rate of LGP1846 over 75 MPa based on closed chamber experiments was fitted with an $r = aP^n$ law in which $n = 1.99$.

More recently, strand burner data have become available at selected pressures up to 220 MPa for LGP1846 (McBratney and Vanderhoff 1994). The strand burner test allows a photographic record of the reacting surface at a selected pressure. A frame from a strand burner test at 220 MPa with ungelled LGP1846 is shown in Figure 3. The cell has a cross section of 3 mm by 10 mm and a height of about 4 cm. The two lines on the cell in Figure 3 are 2 cm apart, and each frame is a different time. Although uniform ignition and controlled conditions were attempted, the propellant burning surface is seen to distort.

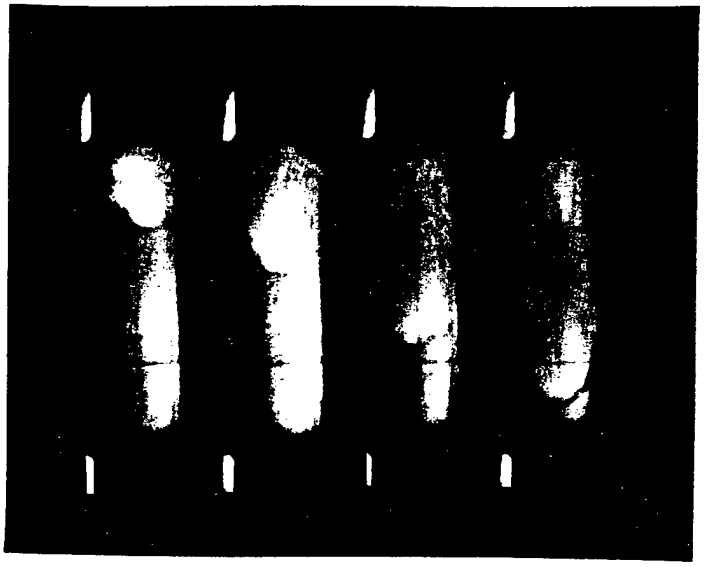

Figure 3. Frames from a strand burner test of ungelled LGP1846 at 220 MPa.

In order to derive a burn rate for the propellant, it was necessary to gel the material. The resulting photograph from a strand burner test of gelled LGP1846 is shown in Figure 4. The propellant is gelled with 2% Kelzan and is shown at four pressures: (1) top left, 11 MPa; (2) top right, 87 MPa; (3) bottom left, 120 MPa; and (4) bottom right, 160 MPa. The burn surface is oriented upward on the top frames and downward on the bottom frames. By comparison with the closed chamber burn rates, the corresponding burn rate exponent based on the gelled strand burner experiments is n = 1.2.

Figure 4. Frames from a strand burner test of gelled LGP1846 at 11 MPa, 87 MPa, 120 MPa, and 160 MPa.

Thus, gelled propellant strand burner experiments are suggested for ETC liquid propellants to provide the IB modeler sufficient information to compare the combustion characteristics of various propellants. Although the effect of the gelling agent in the propellant burn rate is believed minor, additional tests are planned to isolate this effect.

5. EFFICIENCY

Although a thermochemical analysis of a proposed propellant can identify promising propellants, only actual gun firings can determine if the full potential of the propellant can be efficiently utilized. One measure of efficiency is the ballistic ratio (Oberle and White 1991) defined by

$$\text{Ballistic Ratio} = \frac{\text{Experimental Velocity}}{\text{Constant Breech Pressure Simulation Velocity}} .$$

A value of about 0.94 for the ballistic ratio is typical for well-designed SP guns (Oberle and White 1991). Table 5 provides the ballistic ratio for those firings for which sufficient information was available to determine the ratio.

Table 5. Ballistic Ratio

Shot No.	Ballistic Ratio
1	0.78
2	0.79
6	0.73
9	0.89 (S)
13	0.92 (L)
14	0.70 (S)
15	0.71 (S)
17	0.92 (S)
19	0.91 (S)
23	0.96
24	0.88
27	0.82
28	0.76
29	0.84
30	0.85
31	0.77
32	0.77

An analysis of the ballistic ratios in Table 5 provides conflicting results. Firings for both liquid (Shots 1, 2, and 13) and solids (Shots 14, 15, 17, and 19) yield both high and low ballistic ratios. The results may be more of an indicator of the dependence of the ETC process on specific geometric configurations rather than an assessment of the efficiency of the propellant. Thus, the results are inconclusive.

6. COMBUSTION CHARACTERISTICS/MODELING

The interest in SP ETC concepts has spurred the modification of conventional SP IB models to include a representation of the plasma. One successful application of an SP model to the solid propellant electrothermal-chemical (SPETC) firings conducted under the Olin alternate propellant program is the lumped parameter code, IBHVG2 (Earnhart et al. 1992). The investigation of the interaction between the plasma and the propellant is extended in this report to include the influence of axial variations in the state variables in the one-dimensional code, XNOVAKTC (XKTC) (Gough 1993). The XKTC code is a general purpose IB code applicable to a wide variety of SP charge designs, including conventional and traveling charge systems. The code also supports a wide variety of form functions for the SP charge. Thus, it is an ideal platform for study of SPETC charges.

Accordingly, a representation of one or multiple plasma sources has been incorporated into XKTC (Gough 1993). The plasma source is provided as a boundary condition and is reflected in the gas-phase balance equations as a source of mass, momentum, and energy. The plasma is added to the gas-phase over a distance referred to as the mixing length. An arbitrary number of plasma jets are admitted, each characterized by a fixed region over which the jet is mixed, and regions may overlap. Two representations of the plasma are provided. In the simpler representation, the plasma mass flux is given and the mixing length is a fixed value defined as an input datum. In the second representation, the state of the plasma at the entrance to the combustion chamber is specified, and the mixing length is time dependent, based on the Prandtl spreading rate for a turbulent jet. In the modeling of the SPETC firing discussed in this report, the first representation has been employed. The plasma characteristics have also been coupled to the chemistry models of XKTC, although this option has not been exploited in the current work.

The propellant may follow any of several laws of decomposition: (1) exponential as described by traditional methods of a pressure-dependent burn rate law; (2) a Helmholtz law with increment-specific data; and (3) tabular data, specified as either a mass or linear regression rate. In addition, logic has been included to treat the interphase drag implicitly so that highly consolidated regions can be modeled.

The goal of the one-dimensional modeling effort is to develop a code which can be used for SPETC charge design. An initial effort towards this goal is the modeling of selected SPETC experiments. The Olin alternate propellant firings provide the opportunity to study conventional SP in controlled ETC experimental designs. Thus, a firing of M43 SP, OCB15, has been modeled with XKTC using the options for plasma augmentation. This work is considered preliminary, and accurate representation of the plasma in the configuration fired in the test series is not yet resolved. The pressure-time curves for the chamber and barrel gages are shown in Figure 5.

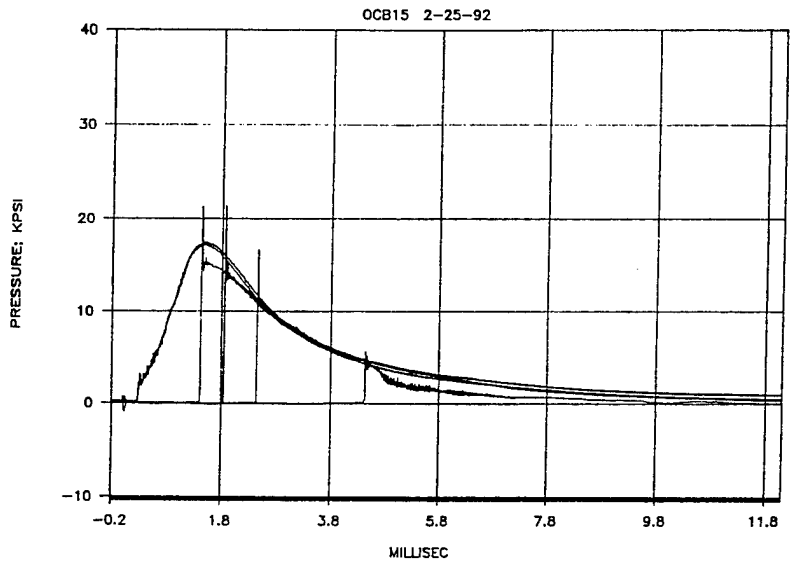

Figure 5. Pressure-time curves from firing OCB15.

The thermochemical data for granular M43 at no electrical energy augmentation and a loading density of 0.2 g/cm^3, as well as the form function description in firing OCB14, is shown in Table 6 (U.S. Army 1990; Kaste 1993). Since the effect of a plasma on the burning rate of an SP is not completely understood, two different burn rates were utilized in the IB simulation. The first is a burn rate which was determined with an analysis of closed chamber data of M43 without plasma augmentation (Selawski et al. 1992). In an attempt to capture the combined effect of plasma/propellant interaction, and its subsequent effect on its burn rate, data from OCB14 were analyzed, and a burn rate for M43 with plasma was derived.

A closed chamber analysis procedure is to burn a sample of the propellant in a closed vessel to obtain the pressure history. This history is then analyzed to obtain a relationship between pressure and mass

Table 6. Thermochemical Data for M43 and Form Function for Firing OCB14

Impetus	1,152.0 J/g
Flame temperature	2,995 K
Gamma	1.2572
Density, measured	1.652 g/cm^3
Covolume	1.127 cm^3/g
Gas mole wt	21.613
Outer diameter	0.289560 cm
Diameter perf	0.011938 cm
Grain length	0.619760 cm
Number of perfs	7

consumed. Then, knowing the geometry of the propellant, the relation between pressure and burning rate can be determined. Generally, this relationship satisfies an expression of the form $r = bP^n$ where r is the burning rate (cm/s), P is the pressure (MPa), and b and n are empirically derived constants. Figure 6 shows the relation between pressure and burn rate derived through a closed chamber analysis of M43 (Selawski et al. 1992). The burn rate law derived from this information using the closed chamber analysis program BRLCB (Oberle and Kooker 1992) and used in the simulation is

$$r = 0.0816\ P^{.929}\ \text{cm/s}.$$

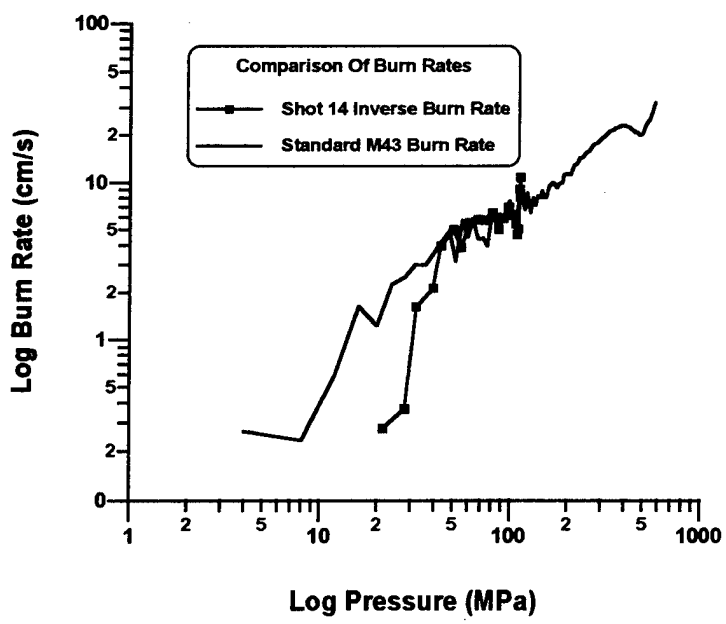

Figure 6. Burn rate derived from inverse analysis of OCB14 compared to closed chamber data analysis.

As mentioned previously, to determine the combined effect of the plasma/propellant interaction, data from OCB14 were analyzed. First, an inverse analysis with heat loss was performed (see Appendix) using the chamber pressure, travel history, and electrical energy input profile (Wren and Oberle 1992). The result of this analysis is a mass history for the firing as shown in Figure 7. The reduction to burn rate was then determined utilizing a modified version of BRLCB. Results are also shown in Figure 6. As can be seen in the figure, the burn rate from the closed chamber analysis (M43 Burn Rate) and the burn rate based on the inverse analysis (shot 14 burn rate) appear to be nearly identical from 40 MPa to 125 MPa, the maximum chamber pressure in shot 14. The discrepancy between the measured and inferred burn rates at pressures less than 40 MPa is due in part to: (1) the effect of rupture of the internal lexan tube which occurs at about 15 MPa as seen in Figure 5, and (2) the time required to obtain full ignition of the bed (which is an assumption of the burn rate analysis). Experimentally, the pressure rise from 15 MPa to 40 MPa occurred over 200 μs. Thus, attributing the discrepancy in burn rates in this pressure regime to nonuniform ignition is not unreasonable.

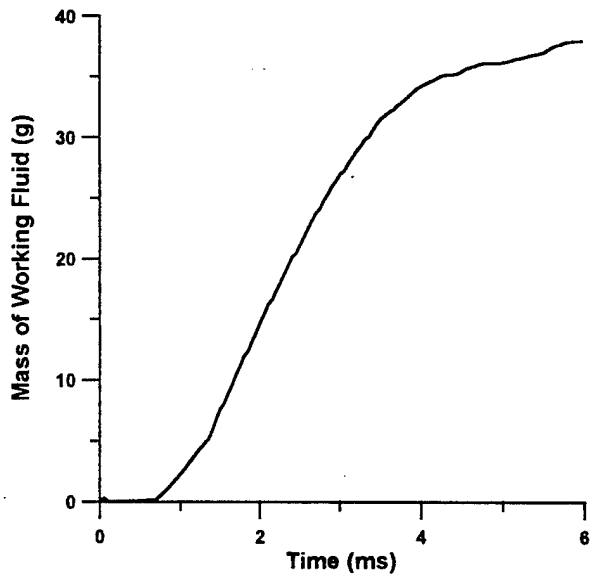

Figure 7. Mass history for OCB14 based on inverse analysis of experimental data.

Previous work with a limited experimental data set of closed chamber firings of SP with a plasma using the same analysis program has indicated no significant effect of the plasma on the burning characteristics of the SP (Fortier 1992). The results of this analysis are in agreement with previous closed chamber results. However, a narrow regime of propellant chemistries, electrical energy densities, and electrical power levels has been investigated. Thus, the influence of the plasma on the SP merits further study.

The one-dimensional model XNOVAKTC (Gough 1990, 1993) was used to simulate the firing OCB14. The initial condition is taken to be a uniform rupture of the lexan tube. In the simulation, the propellant bed is therefore uniformly ignited. Electrical energy continues to inject from the rear, consistent with the experimentally measured current and voltage. A summary of the simulations in shown in Table 7.

Table 7. One-Dimensional Simulation of OCB14

Assumption	Maximum Breech Pressure (MPa)	Muzzle Velocity (m/s)	Propellant Consumed (g)
Experiment	117	568	35.5
Simulation	144	568	28.3

It is noted from Table 6 that both the inverse code and XKTC predict that about 35 g of the original 65 g of propellant is consumed. As can be observed from the results presented in Table 7, XKTC modified for ETC appears to be a valuable tool for SPETC research.

7. SUMMARY

Firings performed under an alternate ETC propellant program were examined for (1) ignition characteristics of plasma-driven propellants; (2) pressurization rates of propellants under the influence of a plasma; (3) control of the gas generation rate in the gun with a plasma; (4) efficiency of the material in performing work on the projectile; and (5) comparison of the combustion characteristics of propellants with and without a plasma through the use of inverse and one-dimensional models. It appears that (1) a plasma may provide consistent ignition of an SP charge; (2) propellant combustion (for the samples investigated) does not "run away" with the presence of a plasma; (3) liquid/gels should be examined in carefully controlled experiments such as strand burners; (4) propellant efficiency (as measured by gun performance) is highly dependent on both the gun geometry and charge configuration, and thus, not easily assessed by gun firings which are not tailored for the specific propellant; and (5) the burn rate of SP M43 does not appear to be influenced by a plasma consistent with recent experimental data. Initial work to apply a one-dimensional model to charge design of SPETC concepts was also initiated. Provision has been made for one or more plasma sources with several representations. The model was applied to an ETC experiment with good agreement between simulation and experiment.

8. REFERENCES

Earnhart, J., N. Winsor, and G. Wren. "Electrothermal-Chemical (ETC) Extensions to IBHVG2 With a New User's Manual." ARL-TR-348, U.S. Army Research Laboratory, Aberdeen Proving Ground, MD, January 1994.

Fortier, S. Private communication. U.S. Army Ballistic Research Laboratory, Aberdeen Proving Ground, MD, June 1992.

Gough, P. "The XNOVAKTC Code." BRL-CR-627, U.S. Army Ballistic Research Laboratory, Aberdeen Proving Ground, MD, February 1990.

Gough, P. "Theoretical Modeling of the Interior Ballistics of the Electrothermal Gun." ARL-CR-47, Paul Gough Associates, U.S. Army Research Laboratory, Aberdeen Proving Ground, MD, July 1993.

Kaste, P. Private communication. U.S. Army Research Laboratory, Aberdeen Proving Ground, MD, 1993.

Kuo, K., F. Cheung, W. Hsieh, and J. Chan. "Experimental Study of Plasma/Fluid Interaction in a Simulated CAP_{TM} Gun." Proceedings of the 27th JANNAF Combustion Subcommittee Meeting, Cheyenne, WY, November 1990.

Kuo, K., and F. Cheung. "Droplet Entrainment of Breakup by Shear Flow." ARL-CR-276, U.S. Army Research Laboratory, Aberdeen Proving Ground, MD, October 1995.

McBratney, W., and J. Vanderhoff. "High Pressure Windowed Chamber Burn Rate Determination of Liquid Propellant XM46." ARL-TR-442, U.S. Army Research Laboratory, Aberdeen Proving Ground, MD, June 1994.

McElroy, H., J. Greig, and A. Juhasz. "Plasma Augmented Ball Propellant Ballistics." Proceedings of the ADPA/ARDEC Fifth International Gun Propellant and Propulsion Symposium, Picatinny Arsenal, NJ, 19–21 November 1991.

Oberle, W., and D. Kooker. "Modifications and Updates to the Closed Chamber Analysis Program BRLCB, Including Provisions for ETC Propellant Analysis." Proceedings of the 29th JANNAF Combustion Subcommittee Meeting, NASA Langley Research Center, Hampton, VA, 19–23 October 1992.

Oberle, W., and K. White. "Electrothermal Gun Technology and Performance: An Analysis of Small and Large Caliber Ballistic Data." BRL-TR-3238, U.S. Army Ballistic Research Laboratory, Aberdeen Proving Ground, MD, June 1991.

Oberle, W., and G. Wren. "Burn Rates of LGP1846 Conditioned Ambient, Hot, and Cold." BRL-TR-3287, U.S. Army Ballistic Research Laboratory, Aberdeen Proving Ground, MD, October 1991.

Oberle, W., and G. Wren. "Electrothermal-Chemical (ETC) Propulsion Technology: A Summary of U.S. Army and Contractor Efforts Under Phase I of the EEF ETC Follow-On Program." ARL-TR-1090, U.S. Army Research Laboratory, Aberdeen Proving Ground, MD, May 1996.

Olin Corporation. Sixth Quarterly Status Review Meeting. U.S. Army Armament Research, Development, and Engineering Center, Picatinny Arsenal, NJ, June 1992.

Selawski, C., S. Newton, W. Aungst, and C. Henry. "Closed Bomb Data on Selected Pre-Production and Production Lots of M43 Propellant." Technology Transfer Report PSB-TTR-92-01CJS, September 1992.

U.S. Army. LABCOM/Ballistic Research Laboratory Contract No. DAAA15-90-C-1061, U.S. Army Ballistic Research Laboratory, Aberdeen Proving Ground, MD, 1990.

Wren, G., and W. Oberle. "An Inverse Analysis of Electrothermal-Chemical (ETC) Gun Experimental Data." BRL-TR-3391, U.S. Army Ballistic Research Laboratory, Aberdeen Proving Ground, MD, September 1992.

APPENDIX:

INVERSE CODE RESULTS FROM SHOT 14

INTENTIONALLY LEFT BLANK.

enter the file containing input file names.

inverse electrothermal gun code

pressure-time file:14tvp.IN
proj motion-time file:14tvpp.IN
proj travel-time file.

electrical energy-time file:14tvce.IN
initial data file:14init.IN
chamber volume (cm^3)= 150.00000
tube diameter (cm)= 3.0 area (cm^2)= 7.06858
projectile position (cm)= 0.00000
projectile mass (kg)= 0.32
working fluid mass (g)= 65.30000
initial working fluid density (g/cm^3)= 1.65200
tolerance required in mass consumed= 0.00100
time start (sec)=0.00000000
time increment (sec)=0.00005000
time end (sec)=0.00650000
initial guess for mass consumed (g)= 0.10000
initial value of beta, fraction of wf moving (-)= 1.00000
mass of air initially in chamber (g)= 0.12730
convective heat transfer coef. at free space = 1.135e4

wall specific heat = 4.6028e6
wall material density (g/cm^3)= 7.86120
heat penetrated thickness (cm)= 0.01143
initial temperature of the gun tube (K)= 293.00000

bulk modulus of wf at one atmosphere (MPa)=5000.00000
derivative of bulk modulus wrt pressure (-)= 8.00000

thermochemical data file:m43.prn

time (ms)	cham pr (MPa)	base pr (MPa)	proj trav (cm)	proj vel (cm/s)	el en den (mj/kg)	cum wf (g)
0.00	2.28	2.07308	0.0000	0.00	0.000	0.00000
0.05	5.47	4.96651	0.0987	2023.75	0.118	0.51279
0.10	2.12	1.92274	0.2025	2127.55	145.154	0.00930
0.15	2.12	1.92274	0.3115	2236.65	293.656	0.00944
0.20	2.23	2.02294	0.4262	2351.30	423.470	0.01005
0.25	1.55	1.40915	0.5468	2471.85	719.205	0.00743
0.30	11.16	10.13974	0.6735	2598.55	141.517	0.04757
0.35	10.65	9.67631	0.8067	2731.80	177.894	0.04594
0.40	16.93	15.38186	0.9468	2871.90	132.104	0.07306
0.45	20.66	18.77015	1.0940	3019.16	123.988	0.08980

0.50	22.19	20.16052	1.2488	3173.94	130.227	0.09741
0.55	28.98	26.32331	1.4115	3336.64	111.608	0.12811
0.60	33.22	30.17510	1.5826	3507.70	107.336	0.14828
0.65	40.74	37.00790	1.7625	3687.56	49.782	0.35320
0.70	44.64	40.55285	1.9515	3876.64	43.159	0.44567
0.75	51.95	47.18526	2.1503	4075.36	23.074	0.90484
0.80	57.21	51.96393	2.3592	4284.36	19.584	1.15376
0.85	62.74	56.99312	2.5789	4549.32	16.768	1.44998
0.90	70.10	63.67569	2.8098	4782.49	13.450	1.94107
0.95	75.93	68.96796	3.0526	5027.69	12.253	2.28110
1.00	83.11	75.49393	3.3078	5285.51	10.808	2.76682
1.05	89.67	81.45010	3.5761	5556.52	9.903	3.21488
1.10	94.47	85.81541	3.8581	5841.35	9.636	3.50197
1.15	101.37	92.08466	4.1546	6140.92	8.687	4.08484
1.20	106.24	96.50634	4.4663	6455.78	8.146	4.53266
1.25	110.31	100.20148	4.7940	6786.73	7.570	5.00981
1.30	112.41	102.10544	5.1385	7134.68	7.229	5.34494
1.35	114.27	103.79646	5.5007	7500.45	6.863	5.70960
1.40	116.08	105.44363	5.8814	7885.08	6.492	6.10743
1.45	116.98	106.26405	6.3489	15309.44	5.643	7.09606
1.50	117.21	106.47071	7.1352	16690.03	5.193	7.76884
1.55	116.14	105.49366	7.9901	18044.62	4.857	8.34958
1.60	115.29	104.72337	8.9123	19372.92	4.518	9.01570
1.65	114.44	103.95298	9.9006	20674.79	4.201	9.73383
1.70	112.57	102.25569	10.9536	21950.57	3.961	10.35242
1.75	111.05	100.87162	12.0699	23200.13	3.715	11.06044
1.80	109.30	99.28079	13.2484	24423.32	3.496	11.76888
1.85	107.14	97.32679	14.4876	25620.09	3.309	12.44140
1.90	104.66	95.06586	15.7863	26791.59	3.149	13.07428
1.95	102.06	92.70464	17.1431	27935.77	3.007	13.69282
2.00	99.68	90.54390	18.5568	29050.85	2.870	14.35173
2.05	97.08	88.18279	20.0260	30146.75	2.753	14.96703
2.10	94.64	85.97199	21.5494	31212.76	2.641	15.60792
2.15	92.16	83.71109	23.1258	32252.26	2.541	16.22982
2.20	89.61	81.40002	24.7537	33266.20	2.452	16.82689
2.25	86.89	78.93243	26.4319	34254.0	2.377	17.36690
2.30	84.81	77.03466	28.1591	35215.55	2.289	18.03754
2.35	82.14	74.61724	29.9340	36149.70	2.226	18.54789
2.40	80.11	72.76960	31.7552	37058.17	2.151	19.19583
2.45	77.90	70.76546	33.6215	37941.07	2.088	19.77745
2.50	75.36	68.45441	35.5314	38798.18	2.041	20.23579
2.55	73.49	66.75711	37.4839	39628.46	1.980	20.85907
2.60	71.28	64.75302	39.4774	40431.67	1.934	21.35291
2.65	69.42	63.05569	41.5108	41208.71	1.884	21.92091
2.70	67.49	61.30840	43.5826	41961.16	1.840	22.44207
2.75	65.74	59.71758	45.6916	42686.14	1.797	22.98965
2.80	64.22	58.33350	47.8365	43386.18	1.751	23.58855
2.85	62.46	56.73635	50.0160	44058.73	1.716	24.07315
2.90	60.65	55.09549	52.2287	44705.24	1.686	24.50416

2.95	59.12	53.70512	54.4733	45325.13	1.652	25.00601
3.00	57.37	52.11431	56.7486	45919.26	1.627	25.38433
3.05	55.73	50.62372	59.0532	46486.69	1.603	25.76828
3.10	54.49	49.49637	61.3858	47029.85	1.571	26.28827
3.15	53.13	48.26254	63.7452	47546.18	1.546	26.72521
3.20	51.66	46.92858	66.1298	48033.92	1.526	27.07531
3.25	50.41	45.79503	68.5386	48497.79	1.503	27.49254
3.30	49.23	44.71777	70.9701	48934.95	1.481	27.90585
3.35	48.15	43.74074	73.4231	49345.02	1.458	28.34119
3.40	46.97	42.66349	75.8963	49729.94	1.440	28.68734
3.45	46.28	42.04340	78.3883	50089.29	1.412	29.26849
3.50	45.27	41.12276	80.8978	50420.76	1.394	29.64419
3.55	44.02	39.98912	83.4235	50726.31	1.384	29.85427
3.60	42.66	38.75541	85.9641	51005.55	1.379	29.95848
3.65	41.59	37.77838	88.5183	51259.61	1.369	30.18564
3.70	40.80	37.06438	91.0848	51487.78	1.352	30.55221
3.75	39.84	36.18751	93.6622	51688.81	1.343	30.77651
3.80	38.76	35.21053	96.2494	51829.13	1.338	30.87976
3.85	38.14	34.64686	98.8448	51985.22	1.322	31.25884
3.90	37.40	33.97678	101.4473	52115.68	1.310	31.53298
3.95	36.62	33.26280	104.0556	52214.41	1.302	31.74083
4.00	35.88	32.59259	106.6682	52292.00	1.293	31.95163
4.05	35.14	31.92251	109.2841	52342.36	1.286	32.13026
4.10	34.24	31.10203	111.9016	52362.19	1.285	32.15266
4.15	33.67	30.58842	114.5196	52357.32	1.276	32.39108
4.20	33.00	29.97460	117.1369	52332.05	1.271	32.51939
4.25	32.37	29.40475	119.7520	52272.16	1.266	32.65031
4.30	31.58	28.68458	122.3636	52182.33	1.267	32.61712
4.35	30.90	28.07078	124.9704	52074.91	1.266	32.64589
4.40	30.39	27.60725	127.5713	51952.10	1.261	32.78368
4.45	29.77	27.04359	130.1648	51790.22	1.260	32.79574
4.50	29.32	26.63028	132.7496	51600.25	1.256	32.91776
4.55	28.81	26.17309	135.3243	51392.08	1.254	32.97516
4.60	28.41	25.80969	137.8928	51389.68	1.246	33.18902
4.65	27.96	25.39642	140.4613	51389.68	1.240	33.34246
4.70	27.23	24.73256	143.0298	51389.68	1.244	33.22869
4.75	26.94	24.47570	145.5983	51389.68	1.234	33.51104
4.80	26.32	23.91205	148.1668	51389.68	1.236	33.46490
4.85	25.64	23.29207	150.7353	51389.68	1.240	33.33923
4.90	25.25	22.93504	153.3037	51389.68	1.235	33.47652
4.95	24.46	22.21491	155.8722	51389.68	1.245	33.20363
5.00	24.23	22.00814	158.4407	51389.68	1.235	33.47773
5.05	23.84	21.65107	161.0092	51389.68	1.232	33.57561
5.10	23.44	21.28787	163.5777	51389.68	1.229	33.65478
5.15	22.87	20.77436	166.1462	51389.68	1.233	33.54697
5.20	22.53	20.46745	168.7147	51389.68	1.228	33.66494
5.25	22.14	20.11052	171.2832	51389.68	1.227	33.71344
5.30	21.79	19.79732	173.8517	51389.68	1.223	33.80294
5.35	21.51	19.54047	176.4201	51389.68	1.218	33.95175

5.40	21.12	19.18350	178.9886	51389.68	1.218	33.96691
5.45	20.50	18.62000	181.5571	51389.68	1.227	33.70851
5.50	20.22	18.36319	184.1256	51389.68	1.223	33.82341
5.55	20.15	18.30672	186.6941	51389.68	1.210	34.19108
5.60	20.04	18.20655	189.2626	51389.68	1.199	34.50027
5.65	19.65	17.84966	191.8311	51389.68	1.200	34.46449
5.70	19.37	17.59277	194.3996	51389.68	1.197	34.55126
5.75	19.20	17.43624	196.9680	51389.68	1.190	34.76715
5.80	18.74	17.02296	199.5365	51389.68	1.195	34.62288
5.85	18.57	16.87242	202.1050	51389.68	1.188	34.83224
5.90	18.29	16.61563	204.6735	51389.68	1.186	34.88650
5.95	17.89	16.25254	207.2420	51389.68	1.189	34.77991
6.00	17.55	15.94566	209.8105	51389.68	1.191	34.74185
6.05	17.50	15.89531	212.3790	51389.68	1.180	35.07018
6.10	16.99	15.43200	214.9475	51389.68	1.189	34.78431
6.15	16.82	15.2755	217.5159	51389.68	1.184	34.94287
6.20	16.76	15.22521	220.0844	51389.68	1.173	35.25800
6.25	16.14	14.66172	222.6529	51389.68	1.189	34.78391
6.30	16.09	14.61164	225.2214	51389.68	1.179	35.08656
6.35	16.03	14.56142	227.7899	51389.68	1.169	35.38843
6.40	15.63	14.19825	230.3584	51389.68	1.176	35.19280
6.45	15.58	14.14804	232.9269	51389.68	1.166	35.48602
6.50	15.24	13.84118	235.4954	51389.68	1.170	35.36277

NO. OF COPIES	ORGANIZATION
2	DEFENSE TECHNICAL INFO CTR ATTN DTIC DDA 8725 JOHN J KINGMAN RD STE 0944 FT BELVOIR VA 22060-6218
1	HQDA DAMO FDQ ATTN DENNIS SCHMIDT 400 ARMY PENTAGON WASHINGTON DC 20310-0460
1	US MILITARY ACADEMY MATH SCI CTR OF EXCELLENCE DEPT OF MATHEMATICAL SCI ATTN MDN A MAJ DON ENGEN THAYER HALL WEST POINT NY 10996-1786
1	DIRECTOR US ARMY RESEARCH LAB ATTN AMSRL CS AL TP 2800 POWDER MILL RD ADELPHI MD 20783-1145
1	DIRECTOR US ARMY RESEARCH LAB ATTN AMSRL CS AL TA 2800 POWDER MILL RD ADELPHI MD 20783-1145
3	DIRECTOR US ARMY RESEARCH LAB ATTN AMSRL CI LL 2800 POWDER MILL RD ADELPHI MD 20783-1145
	ABERDEEN PROVING GROUND
2	DIR USARL ATTN AMSRL CI LP (305)

NO. OF COPIES	ORGANIZATION
1	HEADQUARTERS USA MATERIEL COMMAND ATTN AMCICP AD M F FISETTE 5001 EISENHOWER AVE ALEXANDRIA VA 22333-0001
1	COMMANDER ATTN SMCRA QA HI LIBRARY RADFORD ARMY AMMO PLANT RADFORD VA 24141
3	COMMANDER USA FOREIGN SCI & TECH CTR ATTN AMXST MC 3 S LEBEAU C BEITER 220 SEVENTH ST NE CHARLOTTESVILLE VA 22901
1	DIRECTOR USA BENET LABORATORIES ATTN SARWV RD G CARAFANO WATERVLIET NY 12189
2	COMMANDER US ARMY ARDEC ATTN SMCAR AEE B D DOWNS D CHIU PICATINNY ARSENAL NJ 07806-5000
1	COMMANDER US ARMY ARDEC ATTN SMCAR AEE J LANNON PICATINNY ARSENAL NJ 07806-5000
2	COMMANDER US ARMY RESEARCH OFFICE ATTN D MANN P O BOX 12211 RESEARCH TRIANGLE PARK NC 27709-2211
2	RADFORD ARMY AMMUN PLANT MNGR MFG ENGNG DEPT ATTN D WORRELL PO BOX 1 RADFORD VA 24141

NO. OF COPIES	ORGANIZATION
1	OFFICE OF NAVAL RESEARCH DEPARTMENT OF THE NAVY ATTN R S MILLER CODE 473 800 N QUINCY STREET ARLINGTON VA 22217
1	COMMANDER NAVAL AIR SYSTEMS COMMAND ATTN AIR 954 TECH LIBRARY WASHINGTON DC 20360
1	COMMANDER NAVAL RESEARCH LABORATORY ATTN TECHNICAL LIBRARY WASHINGTON DC 20375
1	COMMANDER NSWC IH DIV ATTN R SIMMONS CODE 210P1 101 STRAUS AVE INDIAN HEAD MD 20640
3	COMMANDER NSWC IH DIV ATTN C SMITH CODE 610 K RICE CODE 6110J S PETERS CODE 6110C 101 STRAUS AVE INDIAN HEAD MD 20640-5035
1	DEFENSE SPECIAL WEAPONS AGENCY ATTN DAVID LEWIS 6801 TELEGRAPH RD ALEXANDRIA VA 22310-3398
1	PENNSYLVANIA STATE UNIVERSITY DEPT OF MECHANICAL ENGINEERING ATTN K KUO 312 MECHANICAL ENGINEERING BLDG UNIVERSITY PARK PA 16802
1	NORTH CAROLINA STATE UNIVERSITY ATTN PROF BORHAM BOX 7909 1110 BURLINGTON ENG LABS RALEIGH NC 27695-7909
1	THE JOHNS HOPKINS UNIV CPIA ATTN T W CHRISTIAN 10630 LITTLE PATUXENT PKWY SUITE 202 COLUMBIA MD 21044-3200

NO. OF COPIES	ORGANIZATION
3	INSTITUTE FOR ADVANCED STUDIES ATTN H FAIR T KIEHNE I MCNAB 4030 2 W BAKER LN AUSTIN TX 78759-5329
3	OLIN ORDNANCE ATTN V MCDONALD LIBRARY T BOURGEOIS D WORTHINGTON P O BOX 222 ST MARKS FL 32355-0222
1	PAUL GOUGH ASSOCIATES INC ATTN P S GOUGH 1048 SOUTH STREET PORTSMOUTH NH 03801-5423
2	SCIENCE APPLICATIONS INC ATTN J BATTEH L THORNHILL 1519 JOHNSON FERRY RD STE 300 MARIETTA GA 30062-6438
2	SAIC SIMULATION TECHNOLOGY ATTN F SU C-C HSAIO 10260 CAMPUS POINT DRIVE SAN DIEGO CA 92121
1	SAIC ATTN G CHRYSSOMALLIS 8400 NORMANDELE BLVD STE 939 MINNEAPOLIS MN 55437
2	THIOKOL CORPORATION ATTN R WARDLE M S 244 G DIXON M S 230 PO BOX 707 BRIGHAM CITY UT 84302-0707
1	VERITAY TECHNOLOGY INC ATTN E FISHER 4845 MILLERSPORT HIGHWAY EAST AMHERST NY 14051-0305
1	ELI FREEDMAN AND ASSOCIATES ATTN E FREEDMAN 2411 DIANA ROAD BALTIMORE MD 21209-1525

NO. OF COPIES	ORGANIZATION
1	ALLIANT TECHSYSTEMS INC ATTN J KENNEDY 7225 NORTHLAND DR BROOKLYN PARK MN 55428
1	SPARTA ATTN M HOLLAND 9455 TOWNE CENTER DR SAN DIEGO CA 92121-1964
2	UNITED DEFENSE LP ATTN J DYVIK B GOODELL 4800 E RIVER RD MINNEAPOLIS MN 55421-1498
1	PHYSICS INTERNATIONAL LIBRARY ATTN H W WAMPLER PO BOX 5010 SAN LEANDRO CA 94577
1	LOCHKEED MARTIN DEFENSE SYS ATTN J MANDZY MAL DROP 43 220 100 PLASTICS AVE DEFENSE SYSTEMS DIV PITTSFIELD MA 01201
1	DEPT OF ELECTRICAL ENGINEERING ATTN W J SARGEANT BONNER HALL RM 312 BUFFALO NY 14260
1	CRAFT TECH ATTN A HOSANGADI 174 N MAIN ST BLDG 3 PO BOX 1150 DUBLIN PA 18917

NO. OF COPIES	ORGANIZATION
	ABERDEEN PROVING GROUND
20	DIR USARL ATTN: AMSRL-WT-P, A HORST S RICHARDSON AMSRL-WT-PA, G KELLER A BIRK T COFFEE A JUHASZ J KNAPTON C LEVERITT I STOBIE P TRAN K WHITE G WREN (5 CPS) L-M CHANG W OBERLE T MINOR M NUSCA

NO. OF COPIES	ORGANIZATION
2	RARDE GS2 DIVISION BUILDING R31 ATTN: C. WOODLEY S. GILBERT FORT HALSTEAD SEVENOAKS KENT TN14 7BP ENGLAND
1	MATERIALS RESEARCH LABORATORY SALISBURY BRANCH ATTN: ANNA WILDEGGER GAISSMAIER EXPLOSIVES ORDNANCE DIVISION SALISBURY SOUTH AUSTRALIA 5108
1	R&D DEPARTMENT ATTN: DR. PIERRE ARCHAMBAULT 5 MONTEE DES ARSENAUX LE GARDEUR, QUEBEC, CANADA J5Z 2P4
1	TZN FORSCHUNGS-UND ENTWICKLUNGSZENTRUM ATTN: DR. T. WEISE DR. -ING. ABT. SE FACHBEREICH: HOCHLEISTUNGSPULSTECHNIK NEUENSOTHRIETHER STRABE 20 D-29345 UNTERLÜB, GERMANY
1	ERNST-MACH-INSTITUT ATTN: G. ZIMMERMAN HAUPSTRABE 18 D-7858 WEIL AM RHEIN, GERMANY
1	INSTITUT FRANCO-ALLEMAND ATTN: MR. D. GRUNE F 68301 SAINT-LOUIS CÉDEX, 12 RUE DE L'INDUSTRIE, B.P. 301, FRANCE

INTENTIONALLY LEFT BLANK.

USER EVALUATION SHEET/CHANGE OF ADDRESS

This Laboratory undertakes a continuing effort to improve the quality of the reports it publishes. Your comments/answers to the items/questions below will aid us in our efforts.

1. ARL Report Number/Author ARL-TR-1245 (Wren) Date of Report December 1996

2. Date Report Received _____

3. Does this report satisfy a need? (Comment on purpose, related project, or other area of interest for which the report will be used.) _____

4. Specifically, how is the report being used? (Information source, design data, procedure, source of ideas, etc.) _____

5. Has the information in this report led to any quantitative savings as far as man-hours or dollars saved, operating costs avoided, or efficiencies achieved, etc? If so, please elaborate. _____

6. General Comments. What do you think should be changed to improve future reports? (Indicate changes to organization, technical content, format, etc.) _____

CURRENT ADDRESS

Organization

Name E-mail Name

Street or P.O. Box No.

City, State, Zip Code

7. If indicating a Change of Address or Address Correction, please provide the Current or Correct address above and the Old or Incorrect address below.

OLD ADDRESS

Organization

Name

Street or P.O. Box No.

City, State, Zip Code

(Remove this sheet, fold as indicated, tape closed, and mail.)

(DO NOT STAPLE)

DEPARTMENT OF THE ARMY

OFFICIAL BUSINESS

NO POSTAGE
NECESSARY
IF MAILED
IN THE
UNITED STATES

BUSINESS REPLY MAIL

FIRST CLASS PERMIT NO 0001,APG,MD

POSTAGE WILL BE PAID BY ADDRESSEE

DIRECTOR
U S ARMY RESEARCH LABORATORY
ATTN AMSRL WT PA
ABERDEEN PROVING GROUND MD 21005-5066