AD-A252 924

NAVAL POSTGRADUATE SCHOOL
Monterey, California

DTIC
ELECTE
JUL 16 1992
S A D

THESIS

HISTORICAL OVERVIEW OF DATA COMMUNICATION WITH ANALYSIS OF A SELECTIVE REPEAT PROTOCOL

by

Patricia B. Jensen

March 1991

Thesis Advisor: G. M. Lundy

Approved for public release; distribution is unlimited.

92-18867

UNCLASSIFIED

SECURITY CLASSIFICATION OF THIS PAGE

REPORT DOCUMENTATION PAGE

1a. REPORT SECURITY CLASSIFICATION UNCLASSIFIED	1b. RESTRICTIVE MARKINGS
2a. SECURITY CLASSIFICATION AUTHORITY 2b. DECLASSIFICATION/DOWNGRADING SCHEDULE	3. DISTRIBUTION/AVAILABILITY OF REPORT Approved for public release; distribution is unlimited
4. PERFORMING ORGANIZATION REPORT NUMBER(S)	5. MONITORING ORGANIZATION REPORT NUMBER(S)
6a. NAME OF PERFORMING ORGANIZATION Computer Science Dept. Naval Postgraduate School 6b. OFFICE SYMBOL (if applicable) CS	7a. NAME OF MONITORING ORGANIZATION Naval Postgraduate School
6c. ADDRESS (City, State, and ZIP Code) Monterey, CA 93943-5000	7b. ADDRESS (City, State, and ZIP Code) Monterey, CA 93943-5000
8a. NAME OF FUNDING/SPONSORING ORGANIZATION 8b. OFFICE SYMBOL (if applicable)	9. PROCUREMENT INSTRUMENT IDENTIFICATION NUMBER
8c. ADDRESS (City, State, and ZIP Code)	10. SOURCE OF FUNDING NUMBERS PROGRAM ELEMENT NO. / PROJECT NO. / TASK NO. / WORK UNIT ACCESSION NO.

11. TITLE (Include Security Classification)
HISTORICAL OVERVIEW OF DATA COMMUNICATION WITH ANALYSIS OF A SELECTIVE REPEAT PROTOCOL (U)

12. PERSONAL AUTHOR(S)
Patricia B. Jensen

13a. TYPE OF REPORT	13b. TIME COVERED	14. DATE OF REPORT (Year, Month, Day)	15. PAGE COUNT
Master's Thesis	FROM 09/91 TO 03/92	March 1991	84

16. SUPPLEMENTARY NOTATION The views expressed in this thesis are those of the author and do not reflect the official policy or position of the Department of Defense or the United States Government.

17. COSATI CODES			18. SUBJECT TERMS (Continue on reverse if necessary and identify by block number)
FIELD	GROUP	SUB-GROUP	Telecommunications History, Computer History, Sliding Window Protocol, Systems of Communicating Machines, Selective Repeat Protocol.

19. ABSTRACT (Continue on reverse if necessary and identify by block number)

This thesis is primarily divided into two parts. The first part provides an overview of the historical milestones in the development of the telecommunications industry; the computer industry, primarily the hardware technology, and the merging of the two industries. The milestones chosen and the details given were motivated by the current trends regarding the consolidation of the two fields of telecommunications and computers into the area which is referred to as data communications.

The second part of the thesis is an analysis of a specification for a data link communications protocol, specifically the sliding window selective repeat protocol. The specification was modeled using the systems of communicating machines. This model uses a combination of finite state machines and variables which allows the size of the specification to be linear in the window size. The analysis used is a system state analysis, similar to the reachability analysis of the pure finite state model. The resulting system state analysis was reviewed for an underlying graph structure. The graph found was defined and an inductive proof developed to extend the analysis of the protocol for a window size of all nonnegative integers *w*.

20. DISTRIBUTION/AVAILABILITY OF ABSTRACT [X] UNCLASSIFIED/UNLIMITED [ ] SAME AS RPT. [ ] DTIC USERS	21. ABSTRACT SECURITY CLASSIFICATION UNCLASSIFIED
22a. NAME OF RESPONSIBLE INDIVIDUAL G. M. Lundy	22b. TELEPHONE (Include Area Code) (408) 646-2904 22c. OFFICE SYMBOL CS/Ln

DD FORM 1473, 84 MAR 83 APR edition may be used until exhausted
All other editions are obsolete

SECURITY CLASSIFICATION OF THIS PAGE
UNCLASSIFIED

Approved for public release; distribution is unlimited

HISTORICAL OVERVIEW OF DATA COMMUNICATION WITH ANALYSIS OF A SELECTIVE REPEAT PROTOCOL

by
Patricia B. Jensen
Lieutenant, United States Navy
Bachelor of Arts, Bethany Nazarene College, 1980

Submitted in partial fulfillment of the
requirements for the degree of

MASTER OF COMPUTER SCIENCE

from the

NAVAL POSTGRADUATE SCHOOL
26 March 1992

Author: Patricia B Jensen
Patricia B. Jensen

Approved By: G M Lundy
G. M. Lundy, Thesis Advisor

Amr Zaky
Amr Zaky, Second Reader

Robert B. McGhee, Chairman,
Department of Computer Science

ABSTRACT

This thesis is primarily divided into two parts. The first part provides an overview of the historical milestones in the development of the telecommunications industry; the computer industry, primarily the hardware technology, and the merging of the two industries. The milestones chosen and the details given were motivated by the current trends regarding the consolidation of the two fields of telecommunications and computers into the area which is referred to as data communications.

The second part of the thesis is an analysis of a specification for a data link communications protocol, specifically the sliding window selective repeat protocol. The specification was modeled using the systems of communicating machines. This model uses a combination of finite state machines and variables which allows the size of the specification to be linear in the window size. The analysis used is a system state analysis, similar to the reachability analysis of the pure finite state model. The resulting system state analysis was reviewed for an underlying graph structure. The graph found was defined and an inductive proof developed to extend the analysis of the protocol for a window size of all nonnegative integers w.

Accesion For
NTIS CRA&I ☑
DTIC TAB ☐
Unannounced ☐
Justification
By
Distribution /
Availability Codes
Dist | Avail and / or Special
A-1

TABLE OF CONTENTS

I. INTRODUCTION 1
II. EARLY DISCOVERIES AND ADVANCES IN TELECOMMUNICATION 4
A. TELEGRAPH 4
B. TELEPHONE 6
1. Technology 6
2. AT & T 8
C. RADIO 11
D. TELEVISION 14
E. SATELLITES 17
F. FIBER OPTICS 20
G. THEORETICAL INNOVATIONS 24
III. INVENTIONS AND DEVELOPMENTS IN COMPUTERS 27
A. INITIAL WORK 27
B. ELECTROMAGNETIC RELAY COMPUTERS 28
C. VACUUM TUBE COMPUTERS 29
D. TRANSISTORS 32
E. INTEGRATED CIRCUITS 33
F. PERSONAL COMPUTERS 35
G. THEORETICAL ADVANCES 36
IV. MERGING OF COMPUTERS AND TELECOMMUNICATIONS 40
A. EMERGENCE OF NETWORKS 40
1. SAGE and SABRE 40
2. Packet Switching 41
3. Early Protocols 42
B. STANDARDS 42
1. Modem and Interfaces 43
2. OSI Reference Model 43
3. Commercial Network Architecture 44
4. FDDI and DQDB 45
5. SONET 45
6. ISDN/BISDN 46
V. ANALYSIS OF A HIGHSPEED PROTOCOL 50
A. SLIDING WINDOW PROTOCOLS 50
B. PROTOCOL MODELS 51
C. SPECIFICATION OF A SELECTIVE REPEAT PROTOCOL 53
D. SYSTEM STATE ANALYSIS 58
1. Analysis for $W = 1, 2,$ and 3 58
2. Graph Definition and Structure 62
E. SYSTEM STATE ANALYSIS FOR AN ARBITRARY W 66
VI. CONCLUSION 71

LIST OF REFERENCES 73

INITIAL DISTRIBUTION LIST.....77

I. INTRODUCTION

A great deal has been written about the so-called communication revolution. It has been predicted that videophones would permit us to see and hear our neighbors, every home in America would be wired by cable television, and satellites would make worldwide communications systems a reality. Other predictions included the idea of mass distribution of electronic publications, the country would be crisscrossed by high-capacity fiber optic lines, and workers would work at home maintaining contact with the office by computer.

Even though some of these predictions have not materialized, such as the wide spread integration of videophones in the home or a mass of workers utilizing telecommuting, others have. New and sophisticated communications satellites and the technological advances in transmissions using optical fiber have created international and national communications nets. Personal computers have effected, if not where, certainly how we conduct our work. To all intents and purposes we are in the age of the communications revolution. A time when new and developing technologies and systems are greatly influencing industry and society and when technologies and systems that may have existed for some time are either making an impact on the market or are being used in new ways.

This thesis is primarily divided into two parts. The first part is composed of three sections, beginning with an overview of the historical milestones in the development of the telecommunications industry. This is followed by an overview of the historical milestones in the development of the computer industry, primarily the hardware technology. The third section is an overview of the milestones associated with the merging of the two industries.

It is important to understand that the milestones chosen and the details given were motivated by the current trends regarding the consolidation of the two fields of telecommunications and computers into the area which is referred to as data communications.

> Telecommunications entails disciplines, means and methodologies to communicate over distances, in effect to transmit voice, video, facimile, and computer data. Data communications entails disciplines, means and methodologies particular to transmission of computer data, possibly over a specially engineered network, and typically from a protocol perspective. The data communication field is a subset of the telecommunications field.[MINO 91]

The telecommunication industry and the computer industry have separate but often overlapping histories. A technological advance in one field often spurs an advance in the other. One has only to look at the developments at Bell Laboratories to see this is the case. From this perspective this thesis will cover some historical milestones in both the telecommunications industry and the computer industry up to and through the point where they merge into what is referred to today as the data communications industry. Although concentration is given to the hardware advances some mention will be made of the theories, standards, and policies that have provided significant impact on either or both industries. For the most part the review is chronological, but as advances emerge and develop they rarely do so in an orderly fashion.

The second part of the thesis is an analysis of a specification for a data link communications protocol, specifically the sliding window selective repeat protocol. The power provided to the network through the use of optical fiber is having and will continue to have significant effect on the integration of data processing and the telecommunications industry. The high data transmission speeds of these networks require the reevaluation of existing protocols and in some cases the possible development of new protocols. The specification, which was modeled using the systems of communicating machines model, uses a combination of finite state machines and variables which allows the size of the specification to be linear in the window size. The analysis used is a system state analysis, similar to the reachability analysis of the pure finite state model. The resulting system state analysis was reviewed for an underlying graph structure. The graph found was defined and

an inductive proof developed to extend the analysis of the protocol for a window size of all nonnegative integers w.

II. EARLY DISCOVERIES AND ADVANCES IN TELECOMMUNICATION

This chapter outlines and describes the discoveries and advances in the birth and growth of the field of telecommunications. The motivation is to provide the reader with a perspective on the roots of the current telecommunications industry.

A. TELEGRAPH

In 1801, Italian Alessandro Volta (1745-1827) demonstrated his invention of the voltaic battery, providing the first means of sustained electrical current. This, in conjunction with the electromagnetic field and induction theories and experiments of Danish scientist Hans-Christian Oersted (1791-1851) and English physicist Michael Faraday (1777-1851), supported the design in 1834 of the first telegraph to be operated over any significant distance. A small-scale telegraph system was set up in the city of Gottingen, Germany. Designed by Karl Friedrich Gauss and Wilhelm Weber, the receiver utilized a free-swinging magnetic needle inside the coil carrying the signal current. The direction in which the needle swung depended on the direction of the current in the coil.[ANDR 89][MODI 91]

Three years later, William Cooke and Sir Charles Wheatstone (1802-75) demonstrated a telegraph system in England in on July 27, 1837. The system was a railway telegraph circuit between Euston and Camden Town, a distance of one and a half miles. Using galvanometer-base receivers, the message was read by watching the motions of five compass needles, each controlled by a separate circuit.[ABBO 34] In 1846, the Electric Telegraph Company was formed in England and by 1853 had laid 4000 miles of telegraph lines. [FABR 63]

About the same time as the work of Gauss, Weber, Cooke, and Wheatstone; American Samuel F. B. Morse developed his telegraph consisting of an electromagnet holding a pen

to mark a moving strip of paper with dots and dashes. He obtained a patent in 1837 on this design and it was to become the first commercially successful version of the telegraph.[WRIG 90] In February 1837, the United States House of Representatives passed a resolution requesting the Secretary of the Treasury to investigate the feasibility of setting up a telegraph system.The first telegraph line in the United States went into operation on May 24, 1844. This prototype ran from Washington, D.C. to Baltimore, Md. and was constructed with $30,000 funded by Congress.[FABR 63] Since no expansion was proposed, Morse began the following year to licence private concerns to utilize his invention. By 1850, due to the efforts of Morse and others, the telegraph extended from Boston south to New Orleans and west to Chicago. In other parts of the United States isolated telegraph networks were established [FINN 90] The United States census report in 1852 stated that more than 450 towns were connected by the telegraph. [ANDR 89]

In 1860, the feasibility of a transcontinental telegraph across the United States was being considered. Legislation in support of a telegraph line had been passed by the government guaranteeing up to $40,000 a year for 10 years. Western Union won the bid on the contract and with the support of four California telegraph companies and an agreement with the Pony Express the work began. The California companies would construct the telegraph line west of Salt Lake City, Utah and Western Union would construct the eastern section. The Pony Express would be used to set up the lines along their route. The eastern section was completed on October 18, 1861 and the western section finished six days later. By the eve of the Civil War there would be 53,000 km of telegraph lines spanning the United States; by 1870, 100,000 km and by 1890, 400,000 km.[FINN 90]

In the rest of the world, the electric telegraph was controlled by the governments and the railroads. The first electric telegraph line in France was established in 1845; in Belgium, 1846; in Italy, 1847; in Germany; 1849 and in Switzerland 1852. [ANDR 89]

The first international telegraph cable was laid between Calais and Dover in 1850 and a transatlantic cable was tried in 1858 between Ireland and Newfoundland. The transatlantic cable was laid successfully, but it soon broke due to corrosion. The first permanent transatlantic cable was completed on July 27, 1866. This cable ran between Europe and the United States and was largely due to the efforts of three men; two Englishmen, John Brett and Charles T. Bright (1832-88), and an American, Cyrus W. Field (1819-92).

Although the telegraph was primarily for long distance communication, intracity district telegraph companies were established in major cities to provide local communications, by the 1860s. Boston had a telegraph based city fire alarm system by 1852 and New York City had connected all its police stations by 1853. District offices were interconnected by central offices for manual relaying of transmissions. Business customers could lease instruments and lines to their own offices.

B. TELEPHONE

1. Technology

One year after receiving a patent on his telephone in 1876, Scottish-American Alexander Graham Bell (1847-1922) established Bell Telephone Company. The initial telephone service was provided by renting pairs of telephone sets to individuals for local service, but increasing demands for telephone service led to the development of a switchboard in 1878. A central switching office was established where a number of telephone sets could be interconnected manually by an operator. The first exchange opening in New Haven, Connecticut on January 28, 1878. It handled only 21 people, listed by name rather than number, but additional exchanges in Connecticut and 11 other states were opened by the end of the year.

Efforts to interconnect any two telephone sets automatically were first successful in 1889 with the invention of a step-by-step switch, by Almon B Strower. After this invention the verbal request for an operator was replaced by dial signals initiated by the customer. Subsequent research and development improved the step-by-step leading to more advanced electromechanical switching systems and later electronic switching systems with complex memory and logic functions.

The first telephones were connected by a single base copper wire, to reduce noise and intercircuit electromagnetic coupling the balanced wire pair was introduced in 1881. In 1888, paper began being used to insulated the wire, to lessen the maintenance expense and safety hazard of the overhead wires. The coaxial cable was developed by Bell Telephone Laboratories in the United States in 1928.

In 1937 Alec Reeves utilized the concept of pulse code modulation (PCM) for speech transmission. Pulse code modulation is a method of converting analog signals to digital format. To do this the message wave is sampled (sampling), the value of each sample is replaced by the closest one of a finite set of permitted values (quantizing), and these permitted values are then each unambiguously represented by some one of the possible patterns of N on-or-off pulses (coding).[PARK 84]

By the late 1940s, PCM was the subject of intensive theoretical and exploratory work at Bell Labs. In 1947 and 1948, multi-channel PCM systems were described and demonstrated. PCM became commercially feasible with the invention of the transistor and related semiconductor devices (see Chapter III, Section C) and their subsequent development into high speed reliable switching components in the mid-1950s. A direct outgrowth was the T1 system.

The T1/DS1 carrier developed at Bell Labs came into operation in 1962, similar systems were installed in Europe in the late 1960s. Utilizing twisted pair wire, the T1/DS1 system was the first commercial digital transmission system. The voice is encoded by

sampling the wave form 8000 times a second with seven bits allocated to describe the amplitude of the wave form and one bit for parity at each sample for 64,000 bps. It has become a de facto standard for voice coding in telecommunications. Different time slots are allotted to different voice channels, for a total of 24 voice channels each using 64,000 bps.[MUES 79]

The T-carriers are copper-based digital facilities that carry 24 (T1), 96 (T2), 672 (T3), and 4032 (T4) simultaneous pulse-code modulated voice channels operating at 64kpbs each. DS1, DS2, DS3, and DS4 is the correct terminology when describing generic digital carrier systems. The DS, digital system, refers to the coding format used to transmit the information over the carrier system. [MINO 91]

In the mid 1970s AT&T was upgrading its nationwide network, moving it from and analog to a digital system to provide voice, data, and video services to its customers. Electronic switching systems with digital technology were installed across the country and fiber optic cables were being tested by Bell Labs (see Section F of this chapter).

2. AT&T

Developed in his Boston laboratory, Bell described in his patent two general methods for the transmission of speech, the magneto-induction principle and the variable-resistance principle. Bells patent was filed only hours before Elisha Grey, a Chicago inventor filed a patent for the variable-resistance method of speech transmission.

In 1878 Western Union purchased Elisha Grey's patent and established the American Speaking Telephone Company and the Gold and Stock Telephone Company. With Western Union's existing equipment and facilities across the country, they had a distinct advantage. The Bell Telephone company filed suit against Western Union for patent infringement. The suit was settled out of court in November 1879.

Under the settlement Bell Telephone was enabled to purchase from Western Union 56,000 telephones in 55 cities, with the obligation to pay a small royalty to Western

Union. In addition, Bell was prohibited from entering the telegraph industry until the disputed patents expired in 1893 and 1894. The same prohibition applied to Western Union regarding their entry into the telephone industry.

In 1881 Bell purchased major interest in Western Electric Company. Western Electric then became the sole manufacture of telephone equipment. This maneuver not only placed Bell Telephone in a dominate position regardless of the patents, but helped establish the standardization of telephone equipment.

When the Bell patents expired in 1893 and 1894, independent telephone companies were established. These companies began operation in rural areas where American Bell did not provide service. As these areas dwindled, the independent companies began moving into Bell territory, although Bell still owned most of the long distance lines, forcing the independents into concentrating on local service. After petitioning of the independents for connection rights, in 1904 legislation mandated interconnection between telephone companies.

After a transfer of assets from Massachusetts's American Bell to New York's American Telephone and Telegraph Company, Bell was able to increase its capitalization from $100,000 to $20 million. On December 30, 1899, with capital of more than $70 million, AT&T became the parent company of what would become the Bell System of companies. By 1911, AT&T had obtained so many independent telephone companies they were consolidated into a smaller number of state and regional companies.

In the early 1900's under the auspices of the public-utility concept of telephone business, AT&T worked to become the sole supplier of telecommunications in the United States. At this time the company's research and development facilities, Bell Telephone Laboratories, was established as a separate company. While Bell Labs developed the technology, Western Electric would be the manufacturer.

In 1913, after complaints by independent telephone companies to the Department of Justice, AT&T was advised that it might be in violation of antitrust laws and the Interstate Commerce Commission began an investigation. In response to this AT&T relinquished control of Western Union, stopped purchasing independent telephone companies unless approved by the ICC and allowed the independent companies to interconnect with Bell facilities.

But, it was not until Congress passed The Communications Act of 1934 that the industry came under rigorous regulation. The Communications Act defined the national policy for communications in the United States as well as established the Federal Communications Commission to control interstate telephone rates and monitor the provision of facilities and services.

In 1949, the Justice Department again filed an antitrust suit against AT&T for the regulation of Western Electric prices and the divestiture of Western Electric from AT&T. The case lingered until 1956 and while it was largely unsuccessful in establishing competition in the telecommunications industry, it was the impetus to reverse the concept of the industry as a natural monopoly.

As computers became increasingly essential to telecommunications and vice versa, the FCC initiated its First Computer Inquiry in 1965 to consider what regulatory ground rule should exist for the two converging technologies. The result of the study was that while data processing should not be regulated, separation should be maintained between common carriers and companies providing computer services.

From the mid 1950s to the early 1970s conflicts between Bell and the specialized carriers and manufacturers resulted in numerous rulings by the FCC. But it was not until the Justice Department filed an antitrust suit against AT&T on November 20, 1974, that the start was made which would result in the divestiture. The suit finally came to trial on

January 15, 1981, but was recessed after the court deemed that both sides had made significant process toward reaching a settlement.

In early 1982 AT&T agreed to divest its 22 local telephone companies and as a result, under settlement AT&T would retain all the Bell System's interstate facilities, a portion of the intrastate long-distance facilities, and customer premise equipment that was owned by the local telephone companies. In addition, AT&T could retain Western Electric and Bell Laboratories.

As of 1990, the Bell Operating Companies (BOC) continue to be barred form offering any service other than telephony and form owning CATV systems in their own territory. This may be a retardant factor in establishing an all-fiber plant because the Bell Operating Companies (BOCs) must prove-in the technology only on Plain Old Telephone Service (POTS) and data revenues.

C. RADIO

James Clerk Maxwell's theory regarding electric waves and Heinrich Hertz's verification of the Maxwell's ideas (see Section G of this chapter) combined with the invention of the 'coherer', by Edouard Branly in 1891 provided the impetus to develop the radio. The 'coherer', a sensitive device to pick up radio signals, is an insulating tube containing metal filings which, when subjected to an electrical discharge, increased the tube's conductivity.

The next year, in 1892, two men working independently developed the first practical wireless system, Alexander S. Popoff and Italian physicist Guglielmo Marconi (1874-1937). Marconi applied in 1896 for the first patent for radio telegraphy based on the use of electromagnetic waves. At first only able to transmit distances of about a mile, the system progressed until in 1901, when Marconi was able to transmit wireless signals across the Atlantic.

In England in 1904 Sir John Fleming (1899-1945) developed an electric two-element vacuum tube, to be used in detecting, modifying, and amplifying electromagnetic waves. Two years later, H.H.C. Dunwoody and G. W. Pickard invented the crystal radio apparatus. Utilizing the discovery that various kinds of crystals, if touched in the right spot, could 'detect' radio waves and turn them into electrical currents.

Canadian-American named Reginald A. Fessenden (1866-1932) began experiments concentrating on voice transmission in 1900. His idea was to send a continuous wave, instead of the interrupted wave or series of bursts as Marconi did. In 1906, ship wireless operators over a wide area of the atlantic heard a woman singing, then a violin playing, and then a man reading passages from Luke. The transmission was from Brant Rock, Massachusetts. Those who heard the transmission were requested to notify Fessenden.

Improving on Fleming, American Lee De Forest (1873-1961) obtained a patent for his 'audion', a three-element tube or triode, in 1907. The triode was capable of generating as well as detecting and amplifying electromagnetic waves. It became the main device for electronic amplification until the development of the transistor. To demonstrate and refine his audion, De Forest conducted broadcast test in New York, using phonograph records and singers. Also in 1907, speech was being transmitted over 200-mile channels in the eastern United States.

In 1912, the earliest known commercial cascade audio frequency amplifier, based on de Forest's audion, was being manufactured by the Federal Telegraph Company in the United States. The same year, Fessenden developed the heterodyne circuit to improve radio reception.[WRIG 90] The heterodyne circuit changes the frequency by heterodyning, or the "beating" of, two frequencies together to get a third, corresponding to the sum and difference of the input frequencies.[PARK 84] The heterodyne circuit paved the way for the superheterodyne receiver discussed later in this section.

Amplitude modulated radio was invented in 1915 by Hendrick J. van der Bijl and Raymond A. Heising. In amplitude modulation, the carrier wave, called the modulated wave, that is broadcast is a radio-frequency sinusoid whose amplitude is changed in accordance with the audio-frequency program signal to be communicated, called the modulating wave.

The first commercial radio broadcasts began in 1920 by station KDKA in Pittsburgh, Pennsylvania and by 1923 over 500 transmitters were operating on a scheduled basis in the United States. These 500 stations were all using the same wavelength.[WRIG 90] The Federal Radio Commission was formed in 1927 and regulation of the airwaves began.

During World War I, Edwin H. Armstrong (1890-1954), an American electrical engineer, designed an improved version of the broadcast receiver called the superheterodyne. The superheterodyne circuit provided a higher degree of selectivity than a non-heterodyned circuit. As implied by the name, the receiver utilizes the heterodyne principle. The sum of the two frequencies is usually eliminated by tuned circuits following the heterodyne process, but the difference frequency, called the intermediate frequency, is passed on for further amplification and through stages of high selectivity because selectivity at lower frequencies is more easily obtained than at high frequencies. [PARK 84] Most modern receivers are of this design.

Later, in the early-1930s, Armstrong developed frequency modulation (FM). Frequency modulation is a method, similar to amplitude modulation, of impressing the message wave to be communicated on to a sine-wave carrier. In the case of FM, this is done by varying the instantaneous frequency of the sine-wave in an amount proportional to the magnitude of the modulating, or message, wave. Frequency modulation is capable of high-fidelity reception with the advantages, unlike amplitude modulation, of reduced noise, less interference between stations and less transmitter power required to cover a given

area.[PARK 84] By 1949, six hundred FM radio stations were operating in the United States.

In 1950, there were 2,773 radio stations broadcasting in the United States, including AM, FM, commercial and noncommercial; in 1955, 3,211; in 1960, 4,133. By 1962, there were close to 182,000 radio receivers in operation in the United States, 91,000 in Europe and 36, 500 in Australia.

The 1970s marked a new era in radio communications with the transistorization of equipment leading to improved performances, increased reliability, better price ratios, and simplified operation and maintenance conditions.[AUGA 84] By 1975, the number of radio stations broadcasting in the United States had grown to 7,744, by 1980 to 8,566 and by 1985 to 10,359.

D. TELEVISION

Television has its roots in several nineteenth-century inventions as the photograph, telegraph, telephone, phonograph and motion picture, as well as scientific phenomena as electromagnetic waves, and the theory of the electron, but the primary influence was the radio.

The cathode ray tube, invented in Germany in 1897 by Karl F. Braun, could be viewed as one of the initial stepping stones towards the development of television. The cathode ray tube is an electronic tube in which a beam of electrons can be focused to a small area and varied in position and intensity on a surface. The more common of these surfaces are light sensitive.

In 1907 and 1908, respectively, Russian scientist Boris Rosing and British scientist A. A. Campbell Swinton, working independently, conceived of a transmitter that would employ a beam of electrons to scan the scene to be televised, thereby yielding electrical signals identical to the scene itself. These electrical signal would travel by means of electromagnetic waves and after being converted back to signals by the receiver, releasing

the electron beam that would recreate the scene on the receiver's photosensitive screen. In the 1920s and 1930s, the independent research team at Marconi-EMI under the auspices of the Radio Corporation of America (RCA) began building upon this basic concept to form the scientific basis for modern television. [LANE 91]

In 1926 the television was invented by a Scottish inventor John L. Baird and Charles F. Jenkins, working independently. The images were dissected and conveyed through the air using a system that was developed in 1884. The system employed mechanical means such as revolving drums or discs, as in the Nipkow disc. These discs functioned by allowing light waves to pass between the light source and the scene to be televised. As the disc was rapidly spun, the light waves passed through holes placed on the disc in a spiral design and were then converted into electrical impulses, which were carried via electromagnetic waves to a receiver. The receiver, which also employed a disc, converted the electrical impulses back into light waves, thus reconstituting and revealing a transmitted image. The first successful trans-Atlantic transmission was accomplished in 1928 by Baird. That same year Baird developed a color version of the television.[LANE 91] But it was not until 1940 when Hungarian-American Peter C. Goldmark (1906-77) developed and demonstrated the first successful color television system.

Russian-American Vladimir K. Zworykin (1889-1982) demonstrated the first television system in 1929 using the iconoscope, which he invented along with the kinescope in the early 1920s. In only ten years, 1939, the British Broadcasting Corp.(BBC) would be broadcasting on a scheduled basis to over 20,000 television sets in London.

By 1940 there were 23 stations telecasting in the United States. They were operating under a authorization by the Federal Communications Commission (FCC) for limited commercial operations. This meant they could invite a sponsor to do program experiments to defray cost, but could not sell air time. In May, due to conflict over technical standards, even this authorization was withdrawn. The following year television was finally allowed

to go commercial, but the schedules were reduced from 15 hours a week to 4 hours a week and most stations left the air. Then, when a state of unlimited national emergency was declared on May 27 by President Roosevelt, production lines were closed and the focus of work and research shifted to that of national defence. By December, only seven stations were broadcasting in the United States.

After World War II ended, the growth of commercial television resumed and the FCC issued 24 more licenses in July of 1946. In 1948, after approximately 100 licenses had been issued, the FCC called another freeze to study another set of technical problems. Involvement in the Korean War maintained the freeze until the end of 1952. The regular broadcast of color television began in the United States by the National Television System Committee in 1954 and by 1955 there were 411 commercial television stations in operation with 67% of the households owning a television set[FABR 63]. The number of stations had increased by 1960 to 515 with television sets in 85% of the households.

In 1962, Sixty-five countries were transmitting regularly scheduled television programs with 59 million television sets in North America, 26 million in Europe, and 100 thousand in Africa.[FABR 63]

The Japanese public broadcasting company NHK began working in the early 1970s on an improved version of conventional television by increasing the viewing angle and picture resolution. They have spent over $700 million in the past 20 years to develop High-definition Television (HDTV). Their resulting Hi-Vision system is based on the signal compression technique known as MUSE, which was officially adopted in 1984 by Japanese transmission equipment manufacturers.

Even though it was determined that research into forming their own standard was estimated to cost $350 million, MUSE Vision was rejected as an international standard by the Europeans in 1986. Neither the European nor the Japanese standard is compatible with the United States. In 1988, the FCC ruled that the United States HDTV transmission system

must be compatible with the existing receivers of the National Television Standards Committee (NTSC) system. Further, the European and the Japanese systems are based on updated versions of conventional analog technologies, while the focus of the future is towards digital video techniques and products.

The current NTSC standard for the transmission of audio and visual information was developed over forty years ago. In this standard, the transmitted signal fits into a single, 6 MHz channel. There are 525 scanning lines and the width-to-height aspect ratio is 4:3. Improved-definition telephone (IDTV) receivers have been on the market since 1989. IDTV requires no change in broadcasting equipment or bandwidth. The signal is digitized, processed, stored in memory, and then displayed roughly 60 time per second. Enhanced-definition television (EDTV) receivers are expected to by marketed in the United States in the next five years. The number of scanning lines may exceed the current 525. Larger screens may be used, but would be done maintaining current bandwidth and broadcasting equipment. The receivers would have more memory and digital processing equipment than IDTV to accommodate the same information.

HDTV is to use a new signal format based on advanced processing concepts to carry significantly more audio and video information. Similar to IDTV and EDTV, with a larger and sharper displayed image, HDTV requires more memory and signal processing. New production and broadcast equipment and a greater bandwidth allocation will be required. The number of scanning lines is to be between 1,50 and 1,250 with a set aspect ratio of 16:9.

E. SATELLITES

The use of satellites in communication began in 1958 with the first telecommunications satellite, the Signal Communication by Orbiting Relay Equipment (SCORE) satellite. SCORE was a time delayed relay system that recorded and later retransmitted the stored message by remote control. In October 1960 Courier I B,

constructed in the United States, featured an experimental process which ensured privacy and transmission secrecy, but had only a four minute memory.[ANTE 82]

Also in 1960, the Echo project was launched. The Echo used a large plastic balloon, built and launched by the National Aeronautics and Space Administration (NASA), to reflect voice signals between transmitting and receiving stations in New Jersey and California. Bell Labs planned the communications equipment, demonstrated the feasibility of the transmission and tracking concepts, and furnished the principle ground station. The Echo project was followed two years later by the Telstar communications satellite project.[MART 77]

The Telstar communications satellite was a low nonsynchronous orbit, communications satellite designed and built by the Bell System. It successfully relayed television, voice, data and facsimile. The 170-pound, 34-inch sphere was the first active communications satellite and opened a new era in international communications. Using special data sets, data were transmitted from England, and later from France, to New York, at 875 kilobits per second. [MUES 79]

Then in 1963, Mariner II, a space probe, would maintain radio contact with Earth from a distance of 36 million miles. That same year H. A. Rosen of Hughes Corporation conducted synchronous communication with satellites in geosynchronous orbit, which was an idea visualized 18 years earlier by science fiction writer Arthur C. Clark[SPRA 91]. In geosynchronous orbit, satellites are positioned in a ring 22,300 miles above the equator.This allows them to revolve around the earth in exactly the same time that the earth takes to rotate. Three satellites can cover all the inhabited regions of earth, with the exception of a few areas close to the poles.[MART 90]

At first satellites were perceived largely as a means to reach isolated places. The cost of lacing Africa and South America with Bell Systems engineering would be unthinkable.

Satellites were perceived as a counter technology and earth stations began to appear in the remotest parts of the world.

As initial costs dropped satellites began to compete with suboceanic cables which resulted in some political disputes but soon more trans ocean telephone calls were made by satellite than by cable. Television relayed across the ocean by satellite became common, mainly because the cable of the 1960s did not have the capacity to send live television.

In 1965, the deep space probe, Mariner IV, would send back pictures from Mars to Earth. On April 6, 1965, the world's first commercial satellite, "Early Bird", was launched from Cape Kennedy. The "Early Bird" was the first generation of the International Telecommunications Satellite Organization (INTELSAT) series of satellites. INTELSAT was established in 1964 when through the International Telecommunications Satellite Organization treaty, ten countries agreed to join the Communications Satellite Corporation (COMSAT) to form a single organization. COMSAT had been founded in the United States in February 1963 in accordance with the Communications Satellite Act. As of 1989, the high, synchronous orbit INTELSAT series of satellites provide full-scale commercial telecommunication services linking over 180 nations and territories. The series started with the INTELSAT I (Early Bird) in 1965, INTELSAT II in 1967, INTELSAT III in 1968, INTELSAT IV in 1971 and INTELSAT V in 1980, and as of 1989, the more than 118 nations of INTELSAT jointly own and operate 14 satellites.[MINO 91]

In 1969, the first voice messages and television pictures were transmitted from the moon by the Apollo XI crew. The first Viking spacecraft landed on Mars in 1976 and sent back very high quality imagery of Mars.

ANIK was the first North American domestic satellite. Launched in 1974, it was initially used for communications with Canadians in the frozen North.Encouraged by the lower cost for long distance telephone and television services, the United States started using it vice the established common carriers.This prompted the FCC to pass legislation in

the early 1970s by to encourage private industry to submit proposals for launching and operating communications satellites. Thus, Western Union's Westar satellite, with 12 transponders of 36Mhz, was the first United States domestic satellite, similar to Canada's ANIK which was launched two years earlier.[MART 77]

There are three bands of satellite transmission C band which is 4 to 6 GHz, Ku band which is 11 to 14 GHz, and Ka band which is 20 to 30 GHz. The higher the frequency used for the transmission the smaller the earth station required. The C band is used primarily for communication satellite transmission. The Ku band is used for Very Small Aperture Terminal (VSAT) and Direct Broadcast by Satellite (DBS). An example of VSAT would be a corporate communication system with satellite links interconnection remote offices and their networks. A DBS company could provide subscribers with programming ranging from television shows and movies to specialized information services. Utilizing the Ka band, DBS could be used to implement HDTV.

The Ka band is the most recent to be used. The Olympus I satellite launched in 1989 was the first of a series to use this band. The satellites of this series are designed to eventually have the capacity to handle 200 thousand telephone and equivalent data channels and 12 broadcast television channels.[MART 90]

F. FIBER OPTICS

Alexander Graham Bell experimented with optical communication with the Photophone in 1880. Peter Debye proposed a type of lightwave guide made of multiple layers of transparent material and established that a material's ability to guide light was heavily dependent on its refraction index in 1910. It was not until the early 1950s that the idea of using light in a transmission system could move beyond the concept phase, when B. O'Brian, Sr., at American Optical developed the first optical fiber bundles for image transmission. Although O'Brian's fiber bundles were operable, they were not practical for communications due to high attenuation losses.[HOSS 90] [ANTE 82]

There has been much dispute about the invention of the laser (light amplification by stimulated emission of radiation). In 1957, American, Gordon Gould developed the basic idea for the laser, but was not able to obtain a patent until 1986. American Charles A. Townes' design of the laser, in 1959, was based on principles from his earlier development of the maser. The maser is essentially a laser that works at microwave lengths instead of at the shorter wavelengths of visible light. Townes, an instructor at Columbia University, worked with his brother-in-law, Arthur Schawlow, a researcher at Bell Labs, to develop the laser. The laser based on Townes' design began being manufactured in the United States in 1960. [MACC 91] Theodore H. Maimen demonstrated the ruby laser in 1960. This laser was the first to be recognized worldwide as well as the first to be commercially successful. [WRIG 90]

At Bell Labs, lasers were first described in a proposal in 1958. The invention at Bell Labs of the continuously operating gas laser in 1959 was followed by the experimental verification of the helium neon laser in 1960, and the high-power carbon dioxide laser in 1964. [MUES 79]

The experimental demonstration of a pulsed ruby laser at Hughes Aircraft occurred in 1960. This laser had been developed by T. H. Maiman of Hughes Research. It provided a narrow band source of optical radiation suitable for use as a carrier of information.[SPRA 91][HOSS 90]

The first continuous argon ion laser was operated at Bell Labs in 1964. The efficiency of this type of laser was significantly improved by Bell Labs contributions as well as by work at the Hughes Research Laboratories. This laser operates in the blue-green part of the spectrum. Because of its high power and wave length, the continuous argon ion laser is utilized in the medical environment, for silicon integrated circuit mask making, for work in physics, as well as in communications. [MUES 79]

Interest in using fiber as a medium began when Charles Kao and George A. Hockham of Standard Telecommunication Laboratories proposed a clad glass fiber as a suitable dielectric waveguide in 1966. They predicted that by removing the impurities in glass, 20 dB/km attenuations would be achievable. Kapron and others of Corning Glass Works reported on the first low-loss fiber, less than 20 dB/km, in 1970.[SFRA 91][HOSS 90][ANTE 82]

In 1974 at Bell Labs, optical fibers were produced by a modified chemical vapor diposition (MCVD) technique. This type of deposition maintains purity and permits the controlled addition of dopants. Pure class is deposited, at high temperatures from the vapor phase, in thin layers inside fused-quartz tubes. The tubes are then collapsed to serve as preforms for fiber drawing. The fibers have a loss characteristic of 2 to 3 dB/km in the region of the 0.85 micro meter wavelength of gallium-aluminum-arsenide solid-state lasers. The fiber fabrication process based on MCVD has been widely adopted for commercial production of low-loss fiber. [MUES 79]

In 1976, the first experimental links were set up in Canada, the United States, Japan, Holland, and France. The first telephone systems using fiber optics began with the installation by Bell System and General Telephone of a full-service system in Chicago in May 1977. the Chicago system carried voice, data, and video signals on pulses of light transmitted through glass fibers a distance of one and a half miles. The light guides used were 0.1 mm in diameter and made by MCVD process. A pair of these fibers could carry 24 T1 carrier circuits corresponding to 576 voice conversions, a mix of voice and data, or 4-MHz video.[MUES 79][HOSS 90]

In 1983, long-distance telephone deregulation and technological advances merged to provide a revolution in the fiber industry. MCI made the first volume purchases of single mode fiber, while AT&T was starting the first large scale production of single mode fiber. [HOSS 90]

The early systems of 1983 operated at 90 to 135 Mb/s, with some 405 Mb/s in Japan. By 1986, products in the 560 Mb/s range were being delivered, and by 1988, 1.2 to 2.4 Gb/s became a possibility. [HOSS 90] As of November 1990, AT&T was preparing a 3.4 Gbps system for at least one major route. The United States Department of Commerce estimated the Bell Operating Companies had deployed about 1.5 million fiber miles at the end of 1988. MCI's domestic network was reported to be about 99 percent fiber optic as of mid-1990.

By 1985, fiber had been installed by Warner Amex CATV in Dallas and New York City for multiple-channel supertrunking of video (8 channels per fiber). By 1987, companies were advertising up to 16 video channels per fiber and many fiber-to-home experimental systems were being implemented Although none of the fiber-to-home systems have met the cost per subscriber goals to be competitive with coaxial cable for the United States cable television (CATV) market, fiber-to-the-curb is gaining potential.[HOSS 90] Some progress was achieved in the late 1980s in attempts to have the CATV industry use fiber for programming distribution. A number of prototypes that promised audio and frequency modulation transmission alternatives that meet quality and cost requirements. In 1989, a vendor announced an 80-channel AM fiber optic trunking system that can integrate with existing coaxial systems. A system to send 60 analog video channels in FM or a mixture of FM video and digital voice and data over one fiber for at least 12 miles without a repeater was announced in 1990. Increasing digitization of TV sets and VCRs coming from Japan is another force making fiber an attractive system for transmission of video. Fiber optics is being used for the transmission of broadband signals using both analog and digital techniques. In the short term, analog optical channels have excellent transmission properties for broadband analog signals and are more suited to television because the TV set can be interfaced directly to the transmission medium.

The later part of the 1980s emphasized product standardization, network management systems for fiber networks, and higher-speed multiplexing. Although systems had operated on asynchronous multiplexing based principally on DS-1 and DS-3 electrical interface standards, no standard rates and formats existed at the optical interface. In late 1988, the first-draft synchronous optical network (SONET) standards emerged (see Chapter IV, Section B). It recommended standard synchronous optical and electrical interfaces that drop and insert channels at multiples of the synchronous frame rate. This standard brings about equipment compatibility at the optical interface as well as opens the door for optical multiplexing and switching. In the same year, the FDDI 100 Mb/s LAN (see Chapter IV, Section B) standard began to emerge, creating a high-speed backbone LAN that could extend throughout a building or into a metropolitan area. With these standards, open systems architecture at the optical as well as the electrical interface is possible.[HOSS 90]

In the 1980s, single mode optical fiber began to be used routinely in the loop in place of copper feeder cables only a few years after the use of fiber on long distance trunk route[HAWL 91]. New England Telephone began a trial of the Raynet bus in 1989, providing fiber-to-the-curb services in 100 homes in Lynnfield, Massachusetts. A multimode fiber providing 2 Mbps was used. The regional Bell operating companies (RBOCs) planned trials to provide fiber connections to more than 45 hundred residents by the end of 1990. The service is for the most part POTS, but some include cable television. British Telecom is planning a nationwide telephone over fiber local loops by 1992.

G. THEORETICAL INNOVATIONS

On December 21, 1807, French physicist Jean Baptiste Fourier presented the results of his work on the phenomenon of heat propagation and diffusion to the Insitut de France. In his work he found that series of harmonically related sinusoids were useful in representing the temperature distribution through a body. He also claimed that any periodic signal could be represented by such a series. Although his mathematical arguments were

imprecise, and it was not until 1829 that P. L. Dirichlet provided the precise conditions under which a periodic signal could be represented by a Fourier series; the Fourier series and transform provides the equation by which a waveform represented in terms of time can be transformed into a representation in terms of frequency. This remains a powerful tool for the analysis of communication systems and forms the theoretical basis for frequency division multiplexing (FDM). FDM is a system in which the available transmission frequency range is divided into narrower bands, each used for a distinct, separate channel.[OPPE 83]

In the mid 1860s, Scottish physicist James Clerk Maxwell (1831-79) published his papers on the electromagnetic theory of light. Maxwell predicted that electric waves must radiate from every system where oscillations are produced and must travel in all dielectric media with the velocity of light and with similar characteristics of light. It wasn't until 1887 that universal acceptance of the theory was achieved, when German physicist Heinrich R. Hertz (1857-94), after nearly a decade of experiments, verified Maxwell's key predictions including demonstrating that radio waves and light waves were fundamentally the same entity.[WRIG 90] [ABBO 34]

In the 1920s, Harry Nyquist published two papers on his theory of communication in a noiseless channel, "Certain Factors Affecting Telegraph Speed" and "Certain Topics in Telegraph Transmission Theory." His theory specifies that to code properly an analog signal of bandwidth W with basic pulse code modulation techniques, 2W samples are needed per second. The basic formula to determine channel capacity in a noiseless channel that carries his name is $C = 2W\log_2 L$, where C is the channel capacity, W is the frequency, and L is the number of signaling levels.

An employee at AT&T Bell Laboratories, Claude Shannon published his paper "Mathematical Theory of Communication" in 1948. The paper provided a mathematical measure of information and of the information capacity of a communication channel. He

proved mathematically that a channel has a finite maximum capacity. In Shannon's theory, if signals are sent with a signal power S over a channel with noise of power N, the capacity C in bits per second is $C = W \log_2(1 + S/N)$. This formula can also be used to determine the maximum signaling rate over a given channel. A derived formula, $WT \log_2(1 + S/N)$, provides the maximum number of data bits over a channel in time T seconds for the transmission of bits in a sequence that is unpredictable.The results being a theorem about the transmission of communication over a communication channel to eliminate noise through encoding signals that is still used by communication system designers today.

III. INVENTIONS AND DEVELOPMENTS IN COMPUTERS

This chapter outlines and describes the inventions and developments in the computer industry that have importance with regards to the field of data communications. As with the previous chapter, the motivation is to provide the reader with a perspective of the roots of the current computer industry.

A. INITIAL WORK

From the abacus in 500 BC Egypt to the Chinese saun-pan computing tray in 200 AD to the 17th century calculating rods called "Napier's bones," invented by Scottish mathematician John Napier, man has used tools to assist him with computations.

In 1642, French scientist and religious philosopher Blaise Pascal (1632-62) designed and built a mechanical adder and subtracter called the "pascaline." Later in 1666, Englishman Samuel Morland adapted Pascal's idea to build a machine that could multiply by repeated addition. In 1671 in Germany, working independently, Gottfried von Leibniz (1646-1716) designed a machine utilizing binary arithmetic that could add and multiply, which was completed in 1694.

In England in the mid-1830s in England, Charles Babbage (1792-1871) designed his Analytical Engine, which has been described as the world's first general purpose digital computer. From an idea he had in 1812, Babbage built a prototype of the "world's first special purpose digital computer," the Difference Engine. Between 1820 and 1822, this prototype was built, a six-decimal digit machine capable of evaluating any second degree polynomial. With funds from the government, he worked for ten more years, until 1833, in the development of a 26-digit, sixth-degree Difference Engine, but the project collapsed. Still, inspired by a published account of Babbage's invention, a Swedish printer, George Scheutz, and his son, Edward, built a fourth-order 8-digit difference machine in 1854. In

1863, a copy of this machine was made which was used by the British government to compute actuarial tables for the newly emerging life insurance business.

In the 1880s, another forerunner of the modern computer was being developed by Herman Hollerith. Hollerith, an engineering graduate of Columbia, constructed a punch card tabulating machine while working at the U. S. Patent Office. Within ten years, these machines were in use processing returns of the 1890 census for the U.S. Census Bureau.

By 1911, Herman Hollerith's Tabulating Machine Company, was under the ownership of a manufacturing conglomerate, the Computer-Tabulator-Recording Company, the name of which was changed in 1924 to International Business Machines.

B. ELECROMAGNETIC RELAY COMPUTERS

Four men ushered in the modern digital computer era in the 1930s; Howard Aiken of Harvard University, George Stibitz of Bell Telephone Laboratories, Konrad Zuse of the Technische Holchschule in Berlin, and John V. Atanasoff of Iowa State College. Aiken, Stibitz, and Zuse designed and built a number of relay machines and by the 1940s, each working independently, had completed a general purpose programmable digital computer. Aiken had assistance from three engineers at IBM, B. M. Durfee. F. E. Hamilton, and C. D. Lake.

Aiken and the IBM group designed and built a synchronous computer between 1943 and 1944 that operated at a 300 millisecond cycle. This machine was operated at Harvard University and was known as the Harvard Mark I.

At Bell Laboratories, Stibitz built his Model I between 1938 and 1940. Stibitz demonstrated the first remote terminal system (keyboard and printer) to an American Mathematical Society meeting at Dartmouth in 1940, using a machine which was in New York City. Between 1944 and 1947, Stibitz along with S. B. Williams built the Model V system, which was a general purpose two processor machine. An improved version of the Model V, the Model VI, which could service a number of remote terminals via telephone

wires, was set up for a automatic second try if a job failed, and had the capacity to be wired for subroutines was constructed and installed at the Murry Hill, New Jersey, laboratory.

While working as a stress analyst for the Henschel aircraft company in Berlin, Konrad Zuse started building the Zuse 1 (Z1) in the living room of his parent's home. Started in 1936 and completed in 1938, the Z1 was fully mechanical and controlled by punched tape. The memory was comprised of one thousand thin slotted metal plates. Zuse filed a patent with the U.S. Patent Office for the Z1 but was refused because he did not describe his hardware precisely enough. [SLAT 87]

Built during World War II, the Z2 was electromechanical, using secondhand telephone relays in the arithmetic unit. In 1941 the Henschel aircraft factor commissioned Zuse to build the Z3, a fully functional, program-controlled, general-purpose digital computer. The Z3 was still electromechanical, but with the memory and program control characteristics of the conventional computer.[SLAT 87]

In the early 1940's Zuse built his most sophisticated computer, the Z4. Although a general purpose computer, it was ordered by the aircraft ministry for use in calculations in aircraft design. The Z4 was able to add, multiply, divide, or find a square root in three seconds.

C. VACUUM TUBE COMPUTERS

Whereas the others were using relay circuits, Atanasoff began work on digital electronic circuits using the vacuum tube in the late 1930s and by 1939 had produced a breadboard model of a special purpose digital computer. By 1942, with the aid of Clifford Berry, the ABC was constructed. The machine was designed to solve liner equations and while the computer was working the I/O equipment was not. At that time, Atanasoff left Iowa State to work for the Naval Ordnance Laboratory and the machine was never used.

Using ideas from Atanasoff, in 1946, J. P. Eckert and J. W. Mauchly, both of the Moore School of Electrical Engineering at the University of Pennsylvania, had successfully

completed ENIAC (Electronic Numerical Integrator and Computer), the first operational electronic digital computer. Utilizing vacuum tubes rather than electromechanical relays as switches, ENIAC vastly improved computer speed. But since it had virtually no memory, each time a new operation was performed, the machine would require replugging 6,000 switches covering three walls. Later, John von Neumann, as a consultant with Eckert and Mauchly, proposed the first stored program computer, EDVAC (Electronic Discrete Variable Automatic Computer). Started in 1946, this design was refined and enhanced finally, composed of over 4,000 tubes and 10,000 crystal diodes, the machine was completed in 1952. The EDVAC remained in operation until 1962.[SLAT 87]

In December 1943, an electronic digital computer called the Colossus was installed in the Department of Bletchley Park. As a part of the ULTRA project headed by Professor M.H.A. Newman, the computer was designed for cryptographic analysis work during World War II. Alan Turing supervised the effort to build Colossus, hoping to use high-speed automatic transposition of ciphered characters to locate the underlying patterns of the code. A paper tape was used to enter information at the rate of 5,000 characters per second. The Colossus could count, compare, and do simple arithmetic. [SLAT 87]

Professor M. H. A. Newman, who headed the Bletchley project, began directing work at Manchester University, England in 1947. F. C. Williams of the group designed the first random access, large, inexpensive memory device. The "Williams tube," a cathode-ray tube with stored bits on its face, was developed in 1947 and used in a prototype machine in June of 1948. Also in 1948, the same group demonstrated a 2000 rpm head-per-track magnetic drum to be used as backup memory. Magnetic recording on disk or drums had been suggested as early as 1942, with the first successful use in 1947 by A. D. Booth at the University of London. The following year the Manchester group developed a prototype computer containing the first modern index register, the B-tube.

In 1949, Maurice Wilkes, Cambridge University, England, completed a project started in 1946 to develop the first stored program machine. The EDSAC (Electronic Delay Storage Automatic Calculator) was very similar in design to the Moore School EDVAC.

The group in Manchester designed and built the MADM, from 1949 to 1951, under the support of the Telecommunications Research Establishment. The MADM was a one-address, binary machine with 40-bit, fixed point operations. It used the Williams tube memory, eight tubes for 512 words, and a 150,000-bit drum.

Meanwhile, in the United States, von Neumann, Arthur W. Burks and Hermand H. Goldstine, published a report in June 1946 titled "Preliminary Discussion of the Logical Design of an Electronic Computing Instrument." This document and others written the following year led to the construction of the IAS machine. Completed in June 1952, the IAS machine was binary and asynchronous. It contained 1024 40-bit word memory, each being interpreted as one fixed-point number or two instructions, a word parallel memory access, and a parallel arithmetic unit.

At the same time in the Servomechanisms Laboratory of M.I.T., the Office of Naval Research was sponsoring a project called Whirlwind. The purpose was to build an aircraft stability and control analyzer (ASCA) to test new aerodynamic designs. Jay W. Forrester, who later developed the magnetic core memory, headed the program along with Robert R. Evertt.

With 175 people and an annual budget of 1 million dollars, Whirlwind was the largest computer project of the late 1940s and early 1950s. Building Whirlwind took three years. A general purpose computer able to add two 16-bit words in two microseconds and multiplying them in twenty, it became the fastest computer of the early 1950s. [SLAT 87]

Although fast, the Whirlwind was not entirely reliable shutting down a few hours each day. Nor was it able to run programs needing a great deal of read/write memory. What memory it did have was expensive. Each of its 32,$1,000 storage tubes lasted no more than

a month. To solve this problem of expensive memory, Forrester and his engineers developed the magnetic core memory. After testing, the memory as placed into the Whirlwind computer in 1953. The result was a memory access time of six microseconds. [SLAT 87]

The purpose of the Whirlwind computer had expanded during this time to become the prototype for an aircraft identification system to provide defense against a Soviet attack. The system was called SAGE (Semi-Automatic Ground Environment) (see Chapter IV, Section A) and was under Forrester's direction. First tested in 1951, the entire system would not become fully implemented for another seven years. SAGE was phased out in 1983, still using some of the oldest operational computers in the world.[SLAT 87]

As the first real-time computer, Whirlwind led the way to such computational applications as air traffic control, real-time simulations, industrial process control, inventory control, ticket reservation systems, and bank accounting systems.

It gave birth to multiprocessing and computer networks. The first computer with magnetic-core memories and interactive monitors. Also the first sixteen-bit computer, paving the way for the development of the minicomputer of the mid-1960s

D. TRANSISTORS

Developed at AT&T Bell Laboratories, the date of birth for the point-contact transistor was the day that it was used for the first time in demonstration by amplifying a human voice, December 23,1947. In 1948, American physicists John Bardeen and Walter H. Brattain (1902-) obtained a patent for the invention, but since no two transistors worked the same they could not be put into commercial use. Then William Shockley came up with the idea of the junction transistor, which in effect replaced the metal-semiconductor contacts by rectifying junctions between P- and N- type regions within one crystal. This N-P-N transistor lent itself to mass production and Shockley took out a patent for it in 1948.

Introduced to the public at a news conference in Manhattan in July of that year, the point-contact transistor attracted a modest amount of attention.

Three years later, in 1951, the team led by Shockley built the first reliable junction transistor. At that time Bell Labs was willing to license the rights to the transistor to any company in exchange for a royalty. The significance of the device was realized. The first silicon transistors were mass produced by Texas Instrumentation 1954 and sold for $2.50 each.

In February 1956, the scientists in MIT's Digital Computer Lab, working in conjunction with IBM, started developing a transistorized computer to replace the vacuum-tube machines of SAGE. Meanwhile, the computer industry began designing transistorized computers for the commercial market. The first ones appeared in 1957 and 1958, introduced by UNIVAC and the Philco Corporation. In 1958 Control Data Corporation introduced the first fully transistorized computer, the CDC 1604. The following year IBM marketed its first transistorized computers, the 1620 and 1790.

In 1960, the Programmed Data Processor model 1 or PDP-1, the first microcomputer was developed by Digital Equipment Corporation. Three years Digital introduced the first successful minicomputer, the PDP-8. The PDP-8 was about the size of an ordinary refrigerator and cost $18,000. It ran only one program at a time, processed data in twelve-bit words, and contained only 4,000 words of memory. Limited in capability, still it's cost was only a fraction of that of a mainframe, the PDP-8 opened up a new market for computers.[AUGA 84]

E. INTEGRATED CIRCUITS

In 1958, working independently, Jack Kilby of Texas Instruments and Robert Noyce of Intel Corporation designed the first integrated circuits. Kilby's test device, consisting of two circuits built on one piece of germanium, was presented to the executives of Texas Instruments on September 12, 1958. Kilby filed his application for patent to the United

States Patent Office on January 6, 1959, but the patent was granted to Robert Noyce. Although Kilby had been first to come up with the idea of integration he had not addressed the question of interconnections, a problem which Noyce solved. [SLAT 87]

When the integrated circuit was first presented, it received a cool reception from many who felt that resistors and capacitors could not be made out of silicon or that the cost of production would be too high. The device began to be taken seriously when the integrated circuit replaced the transistor in the United States Department of Defence Minuteman project. In 1965 IBM marketed its first integrated-circuit based computer, the 360. The IBM System/360, six machines using the same assembly language and increasing in size and power. It became the cornerstone of modern commercial computing and the basis for IBM's subsequent colossal growth.

In April 1972, Intel Corporation introduced the first eight-bit microprocessor, the 8008. Although it had technical drawbacks, it was powerful enough to run a minicomputer. The 8008 was superseded several years later by the more efficient and powerful 8080 microprocessor. The Intel 8080 was chosen by IBM as the CPU for t he original IBM PC, becoming a personal computer industry standard. In 1982, Intel marketed the 80286. It is used in the IBM PC/AT and mid-range PS/2 model personal computers. Both Motorola and Intel introduced a 32 bit CPU chip about the same time, t he Motorola 6820 in 1984 and the Intel 80386 in 1985. Motorola added memory management to the 6820 to design the 6840 and marketed it in 1987.

Intel announced the 80486 chip in 1989. Containing 1.16 million transistors, the chip is designed to give a micro computer the power and speed normally associated with supercomputers. The same year Motorola introduced the 68040, with 1.2 million transistors on one chip.

F. PERSONAL COMPUTERS

In 1973, David Ahl, while working in the research and development division of Digital, explored the feasibility of a small business computer. Two prototypes were developed. One was a computer terminal containing a circuit board filled with logic and memory chips (no microprocessor.) Basically it was a scaled down model of the PDP-8, Digital's popular minicomputer. The other was a portable computer, about the size of a thick attache case. It contained a monitor, a keyboard, and a floppy disk drive. The project was dropped in May 1974, when the sales representatives on operations committee at Digital decided there was no market for the computer.

Jonathan A. Titus, graduate student at Virginia Polytechnic Institute, ordered one of the newly introduced Intel 8008. Using the applications manual and circuit diagrams provided, he built a computer prototype by the fall of 1973. He called his computer the Mark-8. The machine was about the size of a bread box. It consisted of six circuit boards, one of which held the 8008. It required at least 256 bytes of memory, but the memory could be expanded to up to 16K. With no ROM chips, every instruction had to be entered by the users and the programs were lost when the machine was turned off. The programs were entered one bit at a time by means of a set of toggle switches on the face of the machine. the results were displayed on a panel of lights located next to the switches.

When Titus decided to share his design with other hobbyists, he wrote to two magazines, *Popular Electronics* and *Radio-Electronics*. The result was an article in the July 1974 issue of *Radio-Electronics*. The article, only four pages long, did not provide enough information to actually build the machine. The additional details were provided in a manual written by Titus and published by *Radio-Electronics* which cost $5.50. The circuit boards could also be purchased for $47.50 from Techniques, Inc., who had an arrangement with Titus. At a total cost of about $250 to build, about 10,000 instructions books were sold and about 2,500 people purchased the circuit boards.

The first personal computer was marketed in 1975, the Micro Instrumentation and Telemetry Systems (MITS) Altar 8800. Introduced through a two-part article in the January 1957 issue *Popular Electronics*, the computer was sold in kit form. The kit was priced at $395 and the cost of the machine fully assembled came to $650. The Altar 8800 was designed by three engineers, Edward Roberts, William Yates and Jim Bybee, who had all worked together at the laser division at the Air Force Weapons Lab in Albuquerque, New Mexico. The machine had a 256 byte basic memory and programs were entered via toggles switches on the front panel, much like Titus' Mark-8.

This was just the beginning. By 1977, there were at least thirty personal computer companies, including Apple, Commodore, Vector Graphic, Heathkit, Cromemco, North Star, Processor Technology, and MITS. Tandy shipped its first personal computer, the TRS-80, to Radio Shack in 1978.

In 1981, IBM introduced the IBM PC. The first personal computer produced by IBM, the PC utilized the PC-DOS operating system developed by Microsoft. The operating system almost immediately became the industry standard. The following year when Microsoft introduced the MS-DOS operating system, a version of PC-DOS, the way was paved for other manufacturers to produce copies of the IBM PC. By 1986, IBM announced OS/2, a new operating system designed to allow multi-tasking on the personal computer.

G. THEORETICAL ADVANCES

Irish mathematician and logician George Boole published "Mathematical Analysis of Logic" in 1847, which shows that logic could be reduced to a simple algebraic system. Later in the 1930s, while a graduate student at Massachusetts Institute of Technology graduate, Claude Shannon would be the first to connect the procedures of symbolic logic (true or false) to computer switching circuits using the binary system (1 or 0).[WRIG 90][PENZ 89]

Alan Turing produced two famous papers in addition to his work on Colossus, "On Computable Numbers, with an Application to the Entxcheidungsproblem" in 1936 and "Computing Machinery and Intelligence" in 1950.[SLAT 87]

The first of the two papers was submitted on May 28, 1936 to the London Mathematical Society for publication in their journal. It was written to refute David Hilbert, a German mathematician, who believed that any mathematical problem could be solved. Turing argued that some mathematical problems could not be solved by using automatic computers because the problem could not be restated into a proper algorithm. In the process, Turing described a machine that would imitate the behavior of any other machine when supplied with the necessary instructions on punched paper tape, his famous Turing Machine.[SLAT 87][HODG 83]

Unbeknownst to Turing, American logician Alonzo Church had published a paper just the month before regarding the Entxcheidungsproblem. In this paper, he described a formalism he had developed called lambda calculus, a symbolism for mathematical processes of abstraction and generalization. Church, along with logician Stephen Kleen, discovered that this formalism could be used to translate all the formulae of arithmetic into a standard form. In this form, theorems could be proved by converting one string of symbols of lambda calculus into another string of lambda calculus using simple rules. Church had then shown that the problem of deciding whether one string could be converted into another string was unsolvable, as there existed on formula of lambda calculus which could do it. Having found one such unsolvable problem, he was able to show that the question Hilbert posed must also be unsolvable. But is was not obvious that a 'formula of lambda calculus' corresponded to the notion of a 'definite method.' Turing's construction was more direct and closed the gap in Church's demonstration.[HODG 83]

A Polish- American named Emil Post had anticipated Turing's ideas in unpublished form in the early 1920s, but did not submit a paper until October of 1936. Referring to

Church's paper, he proposed a way of making precise what was meant by 'solving a general problem.' Post utilized the idea of a "mindless worker' capable of only reading an instruction then operating on an endless line of 'boxes' instead of Turing's paper tape machine.

In his second paper, Turing proposed an operative definition of intelligence and thinking. Commonly referred to in the field of Artificial Intelligence as the Turing Test, states that if one cannot distinguish between a computer and a human being on the basis of their answers to the same questions, the computer could be said to be thinking.[SLAT 87]

While there is a debate over who invented the stored program computer, Hungarian-American mathematician John von Neumann (1903-1957) is generally credited with bringing the idea to the public's attention. This was done through a document written to the Moore School of Electrical Engineering in June 1945 called "First Draft of a Report on the EDVAC." [SLAT 87] Following earlier computer designs, His design envisioned a set of storage registers, a series of specialized processing components for computational operations, a network of wires for moving inputs and results around the machine, and a clock to provide a steady sequence of voltage. What he added was a control unit designed to be able to extract the program from memory, decode the instructions, and execute them. Using this design, a computer's program could be changed by changing the contents of the computer's memory instead of the cumbersome and time consuming rewiring of the control unit.[BROO 88]

An other report written by von Neumann, coauthored with Herman Goldstine, analyzed the general problems inherent in coding and programming. The report, "Planning and Coding Problems for an Electronic Computing Instrument," identified two stages in the programming of a problem for the computer. The first was to decide which of those sequences of finite operations that can be carried out by the computer will enact the appropriate computation. To aid this effort, they developed a geometric system for

displaying the logical sequence of operations that must flow forth to carry the computation through. This technique was refined into a tool, they called "flow diagramming," which is essentially a sophisticated version of the system of flow charts.

The second stage was the "static coding," which is the writing of a set of rules, analogous to the description rules for Turing machines, that describe the internal working of the computer as it carries out the specific programming task. These rules are static in that each none carries out a fixed operation, applied one at a time, and taking effect only when the machine enters a given predetermined internal configuration.

IV. MERGING OF COMPUTERS AND TELECOMMUNICATIONS

This chapter outlines and describes the important factors involving the data communications field. The purpose is to provide the reader with information regarding the merge of computers and telecommunications as well as developments that have been and continue to be an influence in the industry of data communications.

A. EMERGENCE OF NETWORKS

Initially, during the early 1960s, networking for computers was largely for the purpose of information transfer for scientific data collection and for the exchange of software programs between data collection computers and mainframes. These systems progressed during the mid to late 1960s to minicomputers used as remote job entry stations connected to the mainframe by a telephone line. As computing costs decreased and it became possible for users at remote sites to afford systems to do some of their processing, the communications needs evolved to that of collaboration between machines and sharing of software.

1. SAGE AND SABRE

To a large extent, the pioneering work for systems combining telecommunications and computers was done in the military. One of the first was the U.S. Air Force's SAGE system. Designed in the early 1950s, its purpose was to protect the United States from surprise air attack. The inputs to SAGE came over data transmission links from a variety of radars which swept the skies of the continent. Input also came from observation aircraft, ground observer corps stations, and picket ships.[MART 90]

In 1954, while SAGE was under construction, IBM began work on a real-time computer seat-reservation system for American Airlines. A smaller version of SAGE, it was known as SABRE (Semi-Automatic Business-Related Environment). It consisted of a duplex computer and 1,200 teletypes all over the country, linked via the phone lines to the

airline's computing center north of New York City. The system took ten years to develop and became operational in 1964.[AUGA 84] The largest commercial real-time data processing network in the world at that time, it could also be considered the first commercial computer network.

2. Packet Switching

The concept of packet switching provided the momentum behind the development of computer networks and enabled more complicated topologies to be used. The idea was first put forward in a paper by Paul Baran of Rand Corporation in 1964, but the first implementation of a packet subsystem was not until several years later by the National Physical Laboratory (NPL) in England.

In the United States DARPA (Defense Advanced Research Project Agency) funded the design and implementation of ARPANET (the Advanced Research Projects Agency Network). Pioneering many of the techniques used in today's systems. The system began service in 1971 and was the first large system to use packet switching.Other advances came out of the ARPANET project, including ideas such as layered protocols, mesh network topology, flow control, fail-soft or fault-tolerant performance, and analytical and simulation models.[SPRA 91] In 1984, the ARPANET was physically separated into MILNET and other research networks sponsored by DARPA. By 1990, the original technology used in the ARPANET was obsolete and in June of that year the ARPANET was discontinued.

The first commercial packet-switched network in the United States was the Telenet network. By 1990, the Telenet network in North America consisted of some 18 thousand network computers and handled in excess of 55 million packets per day. [MART 90]

3. Early Protocols

In the early 1970s the University of Hawaii worked on a packet radio system. The ALOHA method for packet transmission was applicable to radio or satellite systems. Variants of the technique have evolved and form the basis of an important family of LAN protocols.

Also in the early 1970s the Ethernet system was developed by Robert M. Metcalfe at Xerox's Palo Alto Research Center (PARC). The system is also based on broadcast transmission, in this case over a bus. The objective in the design of Ethernet was to devise an inexpensive wideband network for use in the office environment. The transmission method used on the Ethernet bus is carrier sense multiple access with collision detection (CMSA/CD). The baseband version was also designed at Xerox. The broadband version was developed by MITRE in 1980 as a part of its MITREnet local network.

CMSA/CD (IEEE 802.3) works by each device first 'listening' to see if any data are being transmitted on the network. If there is no transmission in progress, the device sends it data onto the bus and maintains 'listening' to know whether a collision will occur or not. If a collision occur, the devise sends a signal on the bus indicating a collision has occurred. The devise then waits a set amount of time to retransmit its data. If the messages collide again, the time period between transmissions is lengthened.

At the University of Cambridge in England, the Cambridge ring, a slotted ring, was designed and implemented in 1975. The token ring was developed at the research laboratories of IBM. By 1985, there were three major local area network (LAN) protocols standardized by the Institute of Electrical and Electronic Engineers(IEEE). They were CMSA/CD; the token ring; and the token bus, a combination of the previous two.

B. STANDARDS

If standards did not exist it would be almost impossible to develop any type of electronic communication system that supports the idea of equipment compatibility. This

idea of standardized equipment and systems assumes greater importance as the communications industry, as a whole, becomes increasingly international in scope.

1. Modem and Interfaces

The CCITT V-Series Recommendations are the most widely supported international modem standards. The modems not adhering to these standards are designed either to support specific applications for which there are no international standards or for use only within a particular country's data network. Another early standard supporting computer networking is the American Electronic Industry Association Standard RS-232-C. Published in 1960, it has become the standard plug and protocol convention between a modem and a machine[SPRA 91].

2. OSI Reference Model

Motivated by the development of non-compatible network architectures work began in 1978 on the Reference Model for Open Systems Interconnection. In late 1987 some of the major computing and telecommunication companies such as Amdahl Corporation, AT&T, British Telecom, Hewlett Packard, Northern Telecom, Telecom Canada, STC, and Unisys began collaborating to develop network management standards. The first set of network management standards came out in the middle of 1988 and additional sets are scheduled to appear through 1992. [MODI 91]

An International Organization for Standardization (ISO) technical committee developed the model and after a draft proposal and draft international standard the basic reference model was adopted as an international standard in 1983. The intent was to establish standards for emerging products before commercial products were in place. Which, as it happened, is also before some of the fundamental research problems had been solved.[SPRA 91]

3. Commercial Network Architectures

In the early 1980s, several manufacturers developed their own network architectures such as IBM's SNA (Systems Network Architecture) and Digital Equipment Corporations's DNA (Digital Network Architecture, layered architectures for telecommunications specifically designed to be implemented on their own systems. Both SNA and DNA use packet switching in one form or another and both are widely implemented in the commercial world. The proliferation of leased lines used in individual networks and the need for more interconnection led to the requirement for a public switched service.[SPRA 91][MODI 91]

SNA is IBM's computer network architecture for large mainframes. Available since the mid-1970s, SNA is continually being updated to keep up with varying requirements. SNA employs a layered architecture. Traditionally, the system has operated on a hierarchical master-slave relationship, with the mainframe acting as the master and the terminals as the slaves. Starting in the late 1980s SNA was enhanced to allow peer-to-peer communication. SNA has generally utilized conditioned dedicated voice-grade lines. DDS and more recently, T1 digital facilities have also been utilized.

Currently, type 3270 SNA communication protocols are the de facto standards for mainframe communication and are implemented by almost one-third of the world's installed base of display terminals. More than 7 million devices are directly attached to SNA networks, including 1 million printers, 500,000 cluster controllers, and 1 million protocol converters.

The SNA implementations of the 1970s and early 1980s exhibited limitations as more sophisticated applications requirements involving distributed computer-to-computer communication began to appear. In particular, the incorporation of microprocessor workstations opened many new networking alternatives that SNA could not exploit effectively. Further complications resulted from the fact that the SNA "standard" was

loosely followed even within IBM. IBM is making fundamental changes to SNA to address the restrictions caused by hierarchical implementation throughout the layers.

4. FDDI and DQDB

In October of 1982, the American National Standards Institute (ANSI), Committee X3T9.5, was chartered to develop a high-speed data network standard. The Fiber Distributed Data Interface (FDDI) specifies a packet switched LAN-to-LAN backbone. A token-passing dual -ring network, FDDI employes two fiber pairs operating at 100 Mbps. Designed to provide the same type of serial interconnection provided by LANs, FDDI includes the high bandwidth, the inherent noise immunity and security of fiber optics. FDDI-II is currently being defined as an upward-compatible, fiber-based LAN incorporating the current data capabilities in addition to the ability to handle voice and T1 compressed video traffic.

Recently standardized is the Distributed Queue Dual Bus (DQDB) for metropolitan area networks (MANs). The DQDB (IEEE 802.6) utilizes two contrary-flowing fiber optic buses operating at 155 Mbps. Activity on the network is controlled by a master station on one of the busses which generates the slots to be passed to all down stream stations. DQDB is based on the token bus protocol.

5. SONET

In 1988, four years of standards work culminated in the publication of a worldwide standard for optical communication. This standard is known as Synchronous Optical NETwork (SONET) in the United States, and synchronous digital hierarchy (SDH) elsewhere. Initially proposed in 1985, by Bellcore (Bell Communications Research), it was first accepted as a national standard and then taken to CCITT.

Optical transmission systems are the economic choice for transporting large cross sections of traffic. A standardized optical interface is, however, required to facilitate

deployment of this technology. SONET is a set of network interface standards aimed at enabling global network interconnection. SONET was originally conceived to provide a standard optical interface signal specification that would facilitate midspan meets. SONET now also defines a new multiplexing hierarchy that attempts to ensure equipment compatibility between offerings from different manufacturers. SONET is a digital hierarchy suited to handling higher-based signals and at the same time allowing easy extraction of lower rate signals. SONET provides the carrier with a number of advantages, including unified operations and maintenance, the capability for multi-vendor midspan meets, integral cross-connect functions within transport elements, and the flexibility to allow for future service offerings. In the early 1990s, telephone operating companies and IXCs were deploying network equipment meeting the new SONET standards.

SONET standards are being defined in phases. Phase I (ANSI T1.105-1988) was completed in 1987 and included the rates and format definition and the optical interfaces. Phase II (ANSI T1.102-1987), in ballot as of June 1990, included an electrical interface definition an addendum to T1.105 defining protocols for data communication channel protocol suites and a new standard for SONET operations, administration, maintenance and provisioning (OAM&P). Phase III defines the message sets to be utilized over the data communication channels to carry out specific OAM&P functions. The ballot for this phase was in 1991.

6. ISDN/BISDN

The conceptual framework for Integrated Services Digital Network (ISDN) was born in the early 1970s when it became apparent that technology was driving down the cost of converting analog signals to digital format.

> If all information could be converted to digital format irrespective of its origin as voice, data, image (like facsimile), or video, great economies could be achieved through the use of common equipment to transport, switch, store, and generally manipulate the information stream[PENZ 89].

Digital information streams could be combined and separated more easily than their analog counterparts making it possible to send information more efficiently and economically.

In 1984, responding again to the need to develop standards in the international telecommunications industry, the Plenary of International Telegraph and Telephone Consultive committee (CCITT) adopted a series of recommendations that defined a general-purpose standard interface for ISDN. CCITT recommendations covering the development and implementation of ISDN can be found in the CCITT "Red Book (1984-85) and the "Blue Book" (1988-89). Many countries are now involved in the planning and deployment of ISDNs as the basis of their future telecommunication infrastructure. ISDN, or islands of ISDNs, will evolve over the decade from the existing telephone network into a comprehensive and ubiquitous infrastructure by progressively incorporating additional functions to provide for both existing and new services.

ISDN is directed primarily at the standardization of the interfaces and services of a public digital network. Currently, different types of interfaces to the telephone network exist for different services. ISDN capabilities include the use of digital loops for central offices (COs) to user premises, multichannel facilities operated using a standard demultiplexing scheme, and user-accessible control channels. The elimination of multiple analog-digital conversions increases the quality of transmission, in addition to supporting a variety of implementation configurations.

In addition to existing services such as voice transmission, the CCITT recommended X.25 packet transmission, and facsimile, narrowband ISDN provides newer services such as integrated voice/data communication, enhanced video text, and certain types of limited motion video.

The narrow band ISDN was standardized to accommodate a wide range of digital connectivity services with B channel bit rate requirements up to 64 Kbps. The basic access

is compromised of two 64 Kbps B channels and a 16 Kbps signaling D channel. Another type of interface, the primary rate access, has a gross bit rate of about 1.5 [illegible] 2 Mbps. Offering the flexibility to allocate high-speed H channels of mixtures of B and H channels. Narrow band ISDN, provides DS0 and DS1 range digital bandwidth and Broadband ISDN (BISDN) provides DS3 and SONET range digital bandwidth.

The current forces that are providing the thrust toward ISDN are common channel signaling, software-controlled products, and automated operations systems. Technical developments prompting the development of ISND include, very large scale integration (VLSI), high-capacity optical fiber transmission, high-speed switching and software, particularly SPC.

A major effort is underway in Europe and Japan to bring ISDN to the market. In the United States, several trials have taken place in the 1986-89 time frame. The first commercial ISDN service of ISDN in the United States was provided by BellSouth in the spring of 1988.

The need for services employing bit rates greater than 2 Mbps was already clear when the I Series recommendations were written, especially because LANs already provided 10 Mbps at the time (in fact, ISDN still has a void in its accommodation of LAN speeds and some observers claim that this will hinder ISDN and BISDN in the data arena). In the 1984 version, other H channels and interface types above 2 Mbps were slated for further study. In 1985, CCITT installed a task group, the "Task Group on Broadband Aspects of ISDN," to investigate the broadband requirements on ISDN. In the current study period (1989-92), Working Party 8 of the CCITT SG XVIII has the charter to develop standards for general aspects of BISDN.

In comparison to several dedicated networks, ISDN services and network integration have major advantages in term of economic planning, development, implementation, operation, and maintenance. While dedicated networks require several

distinct subscriber access lines, the BISDN access can be based on a single optical fiber. Large-scale production of highly integrated VLSI system components will lead to cost-effective BISDN solutions. BISDN is aimed at both business and residential subscribers.

To meet the requirements of possible future broadband services, BISDN is designed to be flexible. A variety of potential interactive and distribution broadband services is contemplated for BISDN, to include Broadband video telephony and videoconferencing, video surveillance, high-speed unrestricted digital information transmission, high-speed file transfer, high-speed high-resolution facsimile, video and document retrieval service and TV distribution (with existing TV of HDTV).

V. ANALYSIS OF A HIGH SPEED PROTOCOL

One of the seven layers outlined in the OSI Open Systems Interconnection model is the data link layer. This layer performs a number of junctions, the most important of which is the adding of a frame check sequence to the stream of data received from the physical layer. Other functions of the data link layer are initialization and termination of the connection, addressing, and flow and sequence control.

The checking sequence is added by the data link layer taking the stream of bits coming from the physical layer and dividing it into frames of a predetermined size, depending on the protocol that is used. The most common is the High-Level Data Link Control (HDLC).

HDLC uses one of two forms of automatic repeat request (ARQ) for error control to convert an unreliable data link into a reliable one. These protocols are go-back-N and selective repeat.

A. SLIDING WINDOW PROTOCOLS

A sliding window protocol allows a transmitter to send multiple packets without waiting for an acknowledgment. The window limits the number of frames that may be sent at any time. As a packet is sent the window closes by one. When an acknowledgment (ACK) is received, the window opens back up by one. If an error in the receipt of the data then a negative acknowledgment (NAK) is transmitted. Packets are assigned sequence numbers to keep track of which ones are sent and acknowledged. The sliding window protocol also must have a means of requesting retransmission of packets that are received in error. Two methods of this are go-back-N and selective repeat.

If a packet is received in error when using the go-back-N protocol, the receiver sends the NAK and all the incoming packets are discarded until the packet in error is received correctly. This requires the sender to retransmit all outstanding packets once a negative acknowledgment is received. The go-back-N protocol has the advantage of simplicity.

There can be significant cost of using go-back-N in loss of bandwidth due to the retransmission of data successfully received, but discarded, after detection of a missing gap by the receiver. This is a particular problem with systems where there is a long propagation delay such as a satellite links or where the data rates are high as in high-speed networks. These networks offer greater bandwidths, as FDDI (100Mb/s) and Broadband-ISDN (> 100 Mb/s), and LAN's with data rates up to the 1 Gb/s range.

Retransmission of successfully received data can be avoided by using selective repeat protocol. A selective repeat protocol requires that only those packets received in error be retransmitted. When a NAK for a corrupt packet has been sent, the receiver continues to acknowledge subsequent packets. These packets are placed in a buffer until the packet received in error is received correctly. The selective repeat protocol offers more efficient utilization of the channel, but requires a more complex logic for both the receiver and transmitter. Also the effectiveness of this selective retransmission of date is effective only if the receiver has sufficient buffer space available for receipt and re-sequencing of the data. [DOER 90]

B. PROTOCOL MODELS

Formal modeling and analysis of protocols is the means by which protocol correctness can be determined. The determination of correctness is essential in predicting the reliability of network operation and for standardization and interoperability of protocols. Most methods used in modeling protocols can be put into one of three general classifications: communication finite state machines, programming languages, and combinations of these two.

In the communicating finite state machine (CFSM) model, each process is modeled as a finite state machine, and implicit queues between the machines are used for communication. A global state of the network is a tuple containing the state of each machine and the contents of each queue in the system. The most common method of

analysis used with this model is called reachability analysis. This analysis generates all possible reachable global states from the initial global state by taking all possible transitions out of each machine. If the implicit queues are allowed to have unbounded length, then it is generally undecidable whether the analysis will terminate, but if an upper bound is place d on the queue length, the method will eventually terminate. The model has the advantage of simplicity and the reachability analysis can be automated. The obvious disadvantage is that the analysis might not terminate if the queue length is unbounded, but as real queues are always of finite length this is not really a problem. Another problem is that the number of global states in the reachability analysis is often, for nontrivial protocols, so large as to make the analysis impractical even if the queue length is bounded and the process is automated. The specification of a practical protocol can be so complex, containing hundreds of states and transition, that one can never really be sure it is the intended specification, or grasp an intuitive feeling for what the protocol is intended to do.

Programming languages have the advantage of being more powerful than pure finite state machines, but at the cost of added complexity, which makes the analysis more difficult. There have also been several models which combined programming languages with the finite state model.

The systems of communicating machines (SCM) model is designed to retain the advantages of the pure finite state model and to reduce or eliminate its disadvantages. To reduce the number of states in each machine, local variables are added. Instead of the implicit queues of the CFSM model, shared variables are used for communication between processes, and a channel may be modeled as a process explicitly, whenever appropriate.

> So we have started with the FSM model, and taken a step in the direction of the programming language model, but it is a carefully defined, restricted step. The result is a model in which we can do a type of reachability analysis similar to that in the FSM model, but with a reduction in states, both in the specification and in the analysis. [LUND 91]

A more detailed description of the systems of communicating machines model is provided in [LUND 91].

C. SPECIFICATION OF A SELECTIVE REPEAT PROTOCOL

The specification of the transmitter for the selective repeat protocol delineated in [BENV 91] using the SCM model is shown by Figures 1 and 2, for a window size of $w = 1$ and an arbitrary window size W, respectively. These machines have been modified for the purpose of clarity, deleting unnecessary states and transitions to conform to the restrictions that delineate the analysis. It is assumed that all the packets transmitted were received without error and no packets were lost or re-ordered during the transmission. The modified transmitters for the protocol is shown by Figure 3 and the associated action table is provided in Table 1.

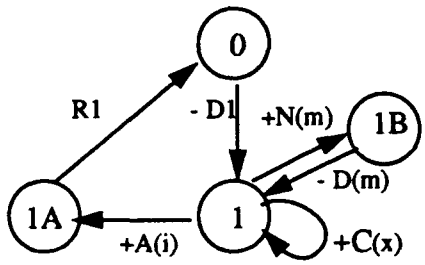

Figure 1: Specifications for original transmitter $w = 1$.

The transmit machine's initial state is 0. As the buffer manager places data in the next available buffer, the transmitter takes the packet, passes it to the frame assembler disassembler, sets a packet timer, and increments the index for the next packet to be transmitted. All of this is indicated by the - D transition. The number corresponding to the

- D indicates the packet to be sent. As long as the next packet is not empty, the transmitter will continue this process until the bottom state on the finite state machine is reached, indicating the transmission of a full window.

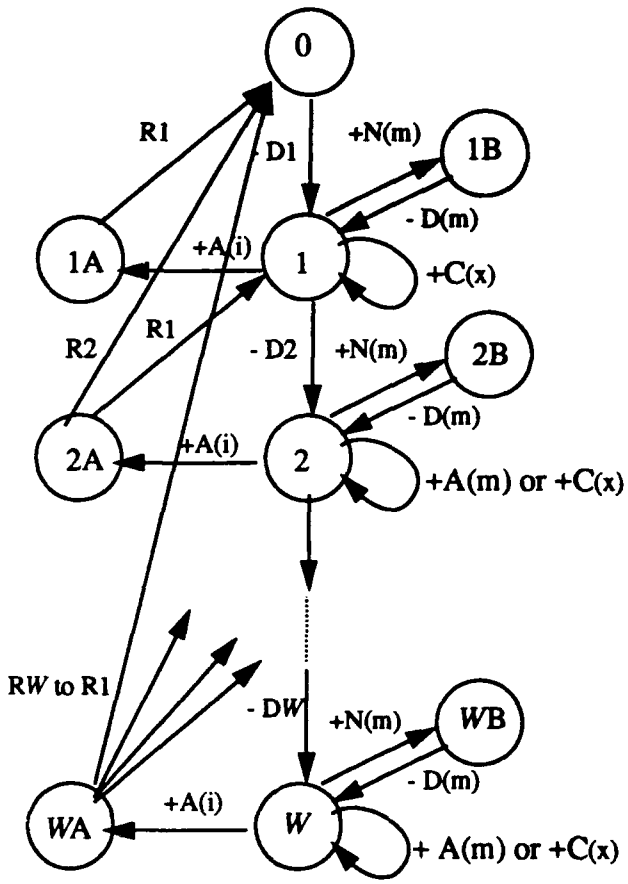

Figure 2: Specification of original transmitter, arbitrary *W*

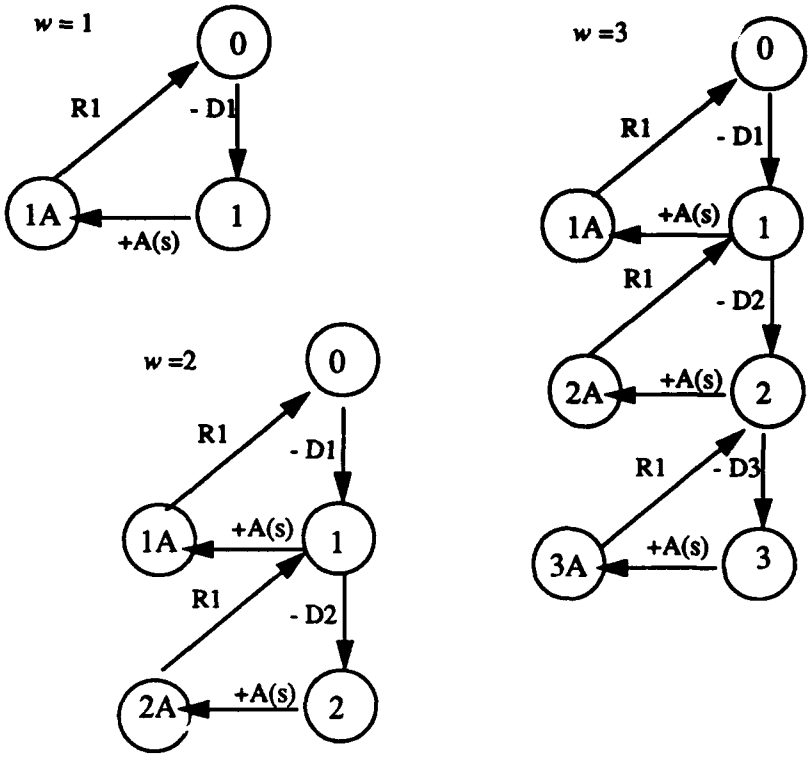

Figure 3: Specification for modified transmitters.

TABLE 1: ACTION TABLE FOR TRANSMITTER

TRANSITION	PREDICATE	ACTION
- D(i)	OUT_BUFFER(i) ≠ E	DATA_OUT <-- OUT_BUFFER(i); Set_Timer(i); i:= i +1;
+ A(s)	CONTROL_IN = Ack(s) ∧ s = i_s	while (i_s< i ∧Ack_Rec(i_s) = True) Delete OUT_BUFFER(i_s) Ack_Rec(i_s):= False; i_s:= i_s + 1; W:= W +1; Delete CONTROL_IN;
R(W)	W = 1...Window_Size	none required

If an ACK is received, the transmitter must determine if the window may be opened and if so, how far. In the case of the original specification in [BENV 91], if the ACK is not for the first packet in the window, the flag ACK_REC() is set to indicate the packet was received correctly, but the window is not advanced because the packets that were transmitted earlier are still outstanding.

When the ACK for the first packet in the window is received the machine clears its buffer, advances the window, and looks at the next sequence number. These steps are indicated by the +A(i) transition to state A. If the ACK_REC() for the next packet has not been set, indicating the acknowledgment of that packet has not been received, then that packet becomes the beginning of the window. If the acknowledgment has been received then the next sequence number is examined until the earliest outstanding packet is found or the window is fully opened. At the completion of this process, the appropriate R transition is executed. The size of the window to be opened is indicated by the number of the R transition, R1, R2, etc., as indicated in Figures 1 and 2. Due to the constraints we have placed on the machines for the analysis, the only transition possible is the R1. This is because the i in the +A(i) transition will always be *s*, indicating the starting packet of the window. This follows logically since no data is lost or reordered. The + N(m) transition, for the NAK is received or if the timer expires, and the - D(m) transition, for retransmission of a lost packet, are eliminated for the modified specification. Similarly, the + C(x) transition for ACK or NAK sequence numbers not within the current window.

The original and modified specifications for the selective repeat receiver for a window of any size is given in Figure 4 and Table 2. The initial state of the receiving machine is 0. All states and transitions except + D(i) and - A(i) are dropped in the modification. Unlike the specification in [BENV 91], if a valid data packet is received the + D(i) transition is taken whether the sequence number of the received packet is equal to the start of the transmit window or not.

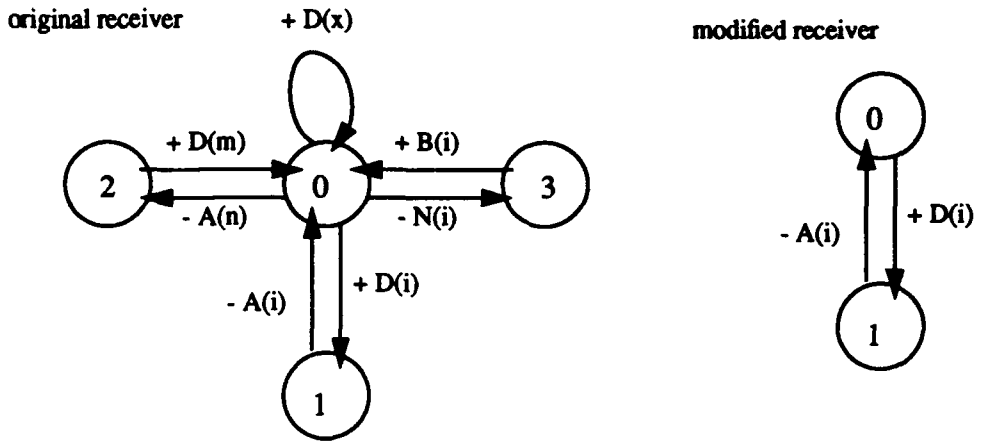

Figure 4: Specification for original and modified receivers.

TABLE 2: ACTION TABLE FOR RECEIVER

TRANSITION	PREDICATE	ACTION
+ D(i)	DATA_IN ≠ E ∧ seq_number = i	IN_BUFFER(i) <-- DATA_IN; Pkt_Rec(i):= True;
- A(i)	none	CONTROL_OUT <-- Ack(i); while (i < i_e ∧Pkt_Rec(i_s) = True) Release IN_BUFFER(i); Pkt_Rec(i_s) = False; i:= i + 1;

If the sequence number is not the start of the transmit window, the flag PKT_REC is set to TRUE in the array of booleans PKT_REC() corresponding to the sequence number of the packet received. The - A(i) transition is taken to acknowledge to the sender that the packet has been received correctly. The packet is then stored. If the sequence number is equal to the start of the transmit window, the same procedure is followed with the exception

that after the packet is released to buffer, and the start of the transmit window is incremented until a sequence number with PKT_REC = FALSE is found. The - A(i) transition is taken from state 1 to acknowledge to the transmitter the packet has been received correctly. The sequence number within each ACK represents the actual sequence number of the packet received and not the sequence number of the next expected packet.

D. SYSTEM STATE ANALYSIS

Utilizing the modification of the specification of the selective repeat protocol defined in [BENV 91], a system state analysis was done for window sizes of one, two, and three. Graphs were constructed and the properties of those graphs defined.

The system state analysis is similar to the reachability analysis used with the pure finite state machine model, but the total number of states which must be generate with system state analysis is significantly smaller. First the system state analysis for the window sizes of $w = 1$, $w = 2$, and $w = 3$ are given. From these a 3-dimensional geometric structure can be derived called the SR1(w) graph.

1. Analysis for $W = 1, 2,$ and 3

As stated previously, two assumptions were made for the analysis. First, all the packets transmitted were received without error and second, no packets were lost or re-ordered during the transmission.

In terms of the specification modified from [BENV 91]for a window size of $w = 1$, the system state analysis is given in Figure 5. The state for each machine is indicated by the tuple (m_1, m_2) where the transmitter is m_1 and the receiver is m_2. The starting state is (0,0). When data is sent from the transmitter to the receiver the - D1 transition is taken to the state (1, 0). When the data is received, + D1, the system's state becomes (1,1). The system state changes to (1, 0) when an acknowledgment is sent by the receiver, - A1. The acknowledgment is received by the transmitter, + A(s), and the state becomes (1A, 0). After

the transmitter determines how far to open the window, the R1 transition is taken bringing the system state back to (0, 0). Note that this is not the initial global state. The analysis must be taken through five more transitions before returning to the initial global state.

The analysis for $w = 2$ is shown in Figure 6. The system state analysis for window size of two follows the same pattern as the analysis for a window size of one, with the following addition. At the instances where there are two possible transitions out of a state, the transition taken is determined by which machine acts first. For example, from the state (1,0) it is possible to take either a + D1 transition or a - D2 transition. If the receiver, m_2, receives a data packet before the transmitter, m_1, sends the next packet, the + D1 transition is executed and the system state becomes (1,1). If m_1 acts before m_2, the - D2 transition is taken. This timing determinate of the two machines is true for all states with more than one possible exiting transition.

The system state analysis for $w = 3$ is shown in Figure 7. The reachability analysis for a window size of three follows the same pattern as the analysis for a window size of two. By comparing the analyses, it is apparent that the smaller graph for $w = 1$ is a sub graph of the graph for $w = 2$. Further, note that both of the graphs for $w = 1$ and $w = 2$ are sub graphs of the graph for $w = 3$.

As indicated by [BENV 91]and by inspection of Figures 5, 6,and 7, the number of states in the system state analysis for a given window size N can be represented by the equation $N^2 + (N+1)^2$. The number of transitions in the system state analysis of a given window size N can be represented by the quantity $5N^2$.

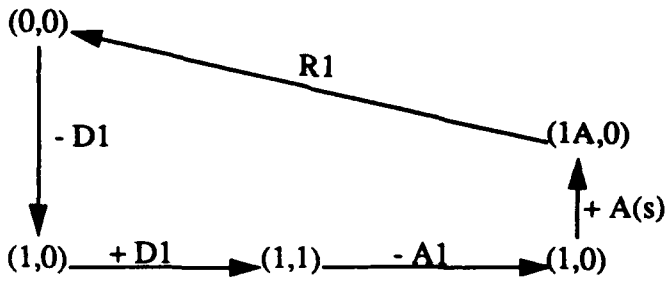

Figure 5: System State Analysis for $w = 1$.

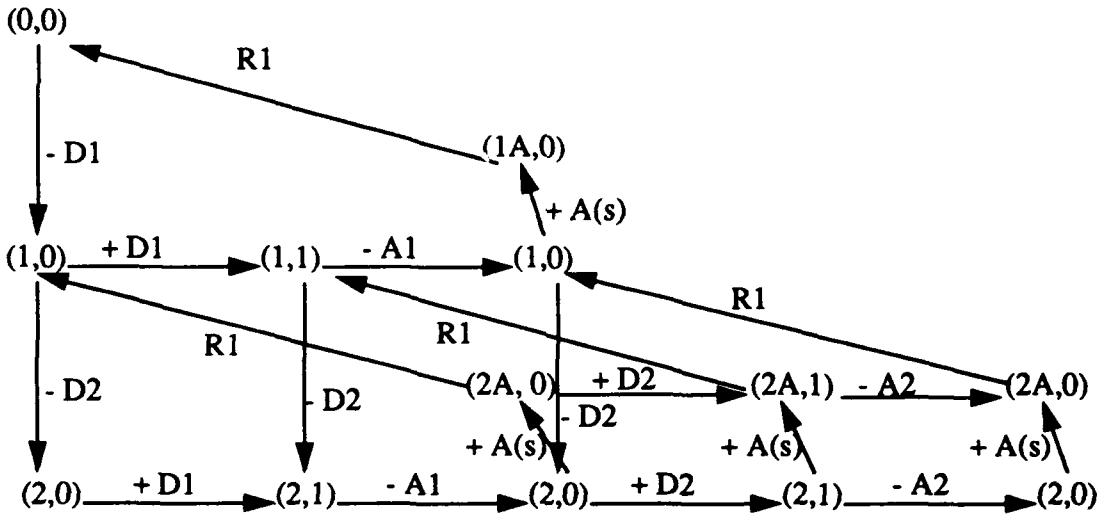

Figure 6: System State Analysis for $w = 2$.

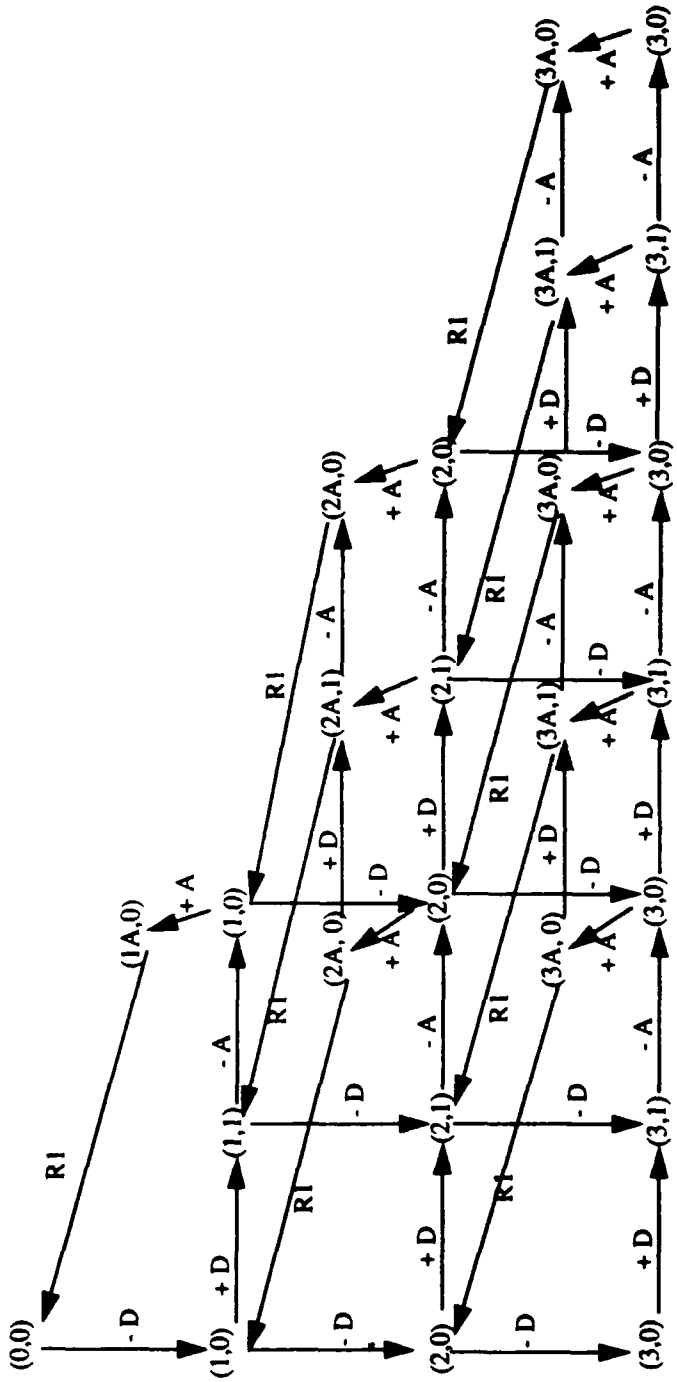

Figure 7: System State Analysis for $w = 3$.

2. Graph Definition and Structure

The directed, labeled graphs constructed from the system state analysis of the window sizes of one, two, and three are generalized and defined in this section. The definition is in terms of *w*, the window size. The definition is used to generalize the analysis to an arbitrary *w*.

Definition A *SR1(w) graph* for a nonnegative integer *w* is a labeled, directed graph, defined by the tuple (N, E, L,ϕ), where

$N = \{(x,y,z) \mid (z = 0, 0 \leq x \leq w, 0 \leq y \leq 2x) \cup (z = 1, 1 \leq x \leq w, 2 \leq y \leq 2x)\}$ is a finite set of nodes, where each node is specified by an ordered tuple;

$L = \{-D(i), +D(i), -A(i), +A(s), R(1)\}$ is a finite set of labels;

E, the set of edges, is a set of ordered pairs $((x_1, y_1, z_1), (x_2, y_2, z_2))$ of nodes from N, and is the union of the following five sets:

$E_1 = \{((x,y,0), (x+1, y, 0)) \mid ((x,y,z) \in N, x < w\}$;

$E_2 = \{((x,y,0), (x, y+1, 0)) \mid ((x,y,z) \in N, y < 2x\}$;

$E_3 = \{((x,y,0), (x+1, y, 1)) \mid ((x,y,z) \in N, 2 \leq y \leq 2x\}$;

$E_4 = \{((x,y,1), (x-1, y-2, 0)) \mid ((x,y,z) \in N\}$;

$E_5 = \{((x,y,1), (x, y+1, 1)) \mid ((x,y,z) \in N, y < 2x\}$;

the mapping $\phi: E \rightarrow L$ is defined as follows:

$\forall (x,y,z) \in E_1,\ \phi(x,y,z) = -D(i)$;

$\forall (x,y,z) \in E_2,\ \phi(x,y,z) = +D(i)$, y even and $-A(i)$, y odd;

$\forall (x,y,z) \in E_3,\ \phi(x,y,z) = +A(s)$;

$\forall (x,y,z) \in E_4,\ \phi(x,y,z) = R(1)$;

$\forall (x,y,z) \in E_5\ \phi(x,y,z) = +D(i)$, y even and $-A(i)$, y odd;

The x coordinate corresponds to the data sent by the sender, the y coordinate corresponds to the behavior of the receiver, either data received or acknowledgment sent, and the z coordinate indicates whether the acknowledgment of the data in the starting window D(s) was received.

Each node of the graph can be thought of as a point in 3-dimensional space, with nonnegative, integral coordinates (x, y, z). The structure of the SR1(w) graph, for $w = 1$, is shown in Figure 8. The states of m_1 and m_2 are the x and y coordinates, respectively. The x coordinate indicates the number of packets outstanding, therefore the number of acknowledgments required, before the window can be fully opened. The y coordinate is reflective of the behavior of the receiver. If the y coordinate is odd then all the packets transmitted have been received. If the node is (x, y, 0), An even y coordinate, except 0, indicates that the first packet in the transmission window has been acknowledged by the receiver. The ((x, y, 1) node with a odd y coordinate indicates that the acknowledgment was received by the transmitter.

The structure of the SR1(w) graph, for $w = 2$. is shown in Figure 9 and $w = 2$, is shown in Figure 10.

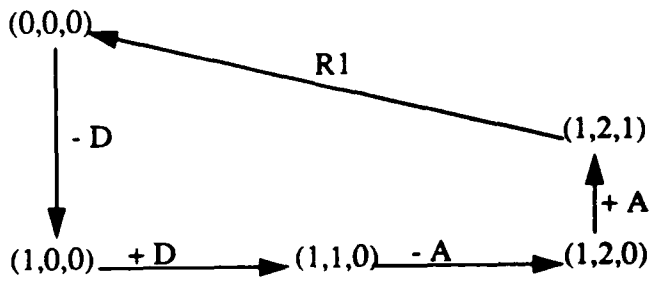

Figure 8: Structure of SR1(1) graph.

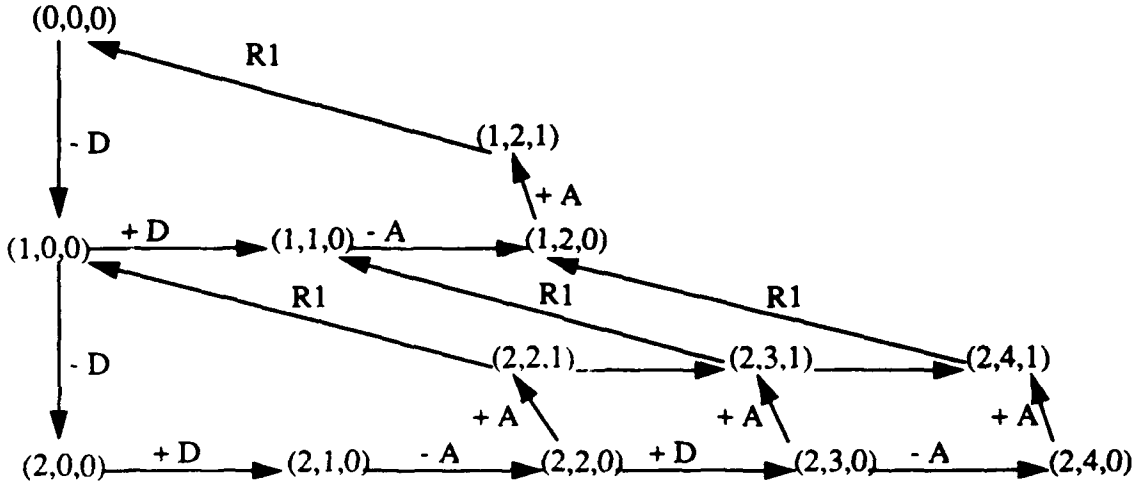

Figure 9: Structure of SR1(2) graph.

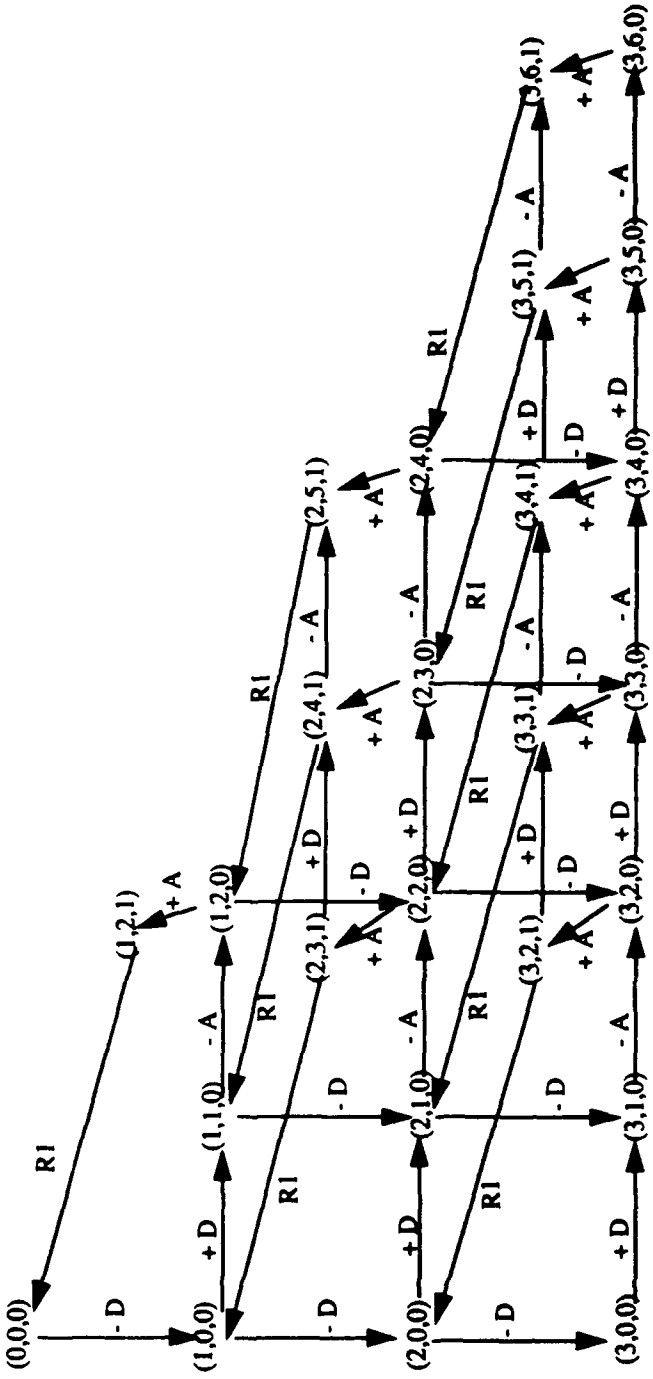

Figure 10: Structure of SR1(3) graph.

E. SYSTEM STATE ANALYSIS FOR AN ARBITRARY *W*

In this section the analysis for $w = 1$, $w = 2$ and $w = 3$ are generalized to and arbitrary w, through the use of the SR1(w) graph definition. The first two lemmas give information about the numbers of nodes and edges in a SR1 graph. The next lemma shows the relationship between the SR1 graphs for various values of w. Lemma 1 was provided in [BENV 91]. Lemma 2 is presented without proof. Lemma 3 is derived by inspection. The main result is that the system state analysis, SSA, for an arbitrary w is given by the SR1(w) graph.

Lemma 1 *The graph SR1(w) has* $f(w) = w^2 + (w + 1)^2$ *nodes.*

Lemma 2 *The graph SR1(w) has* $5w^2$ *edges.*

Lemma 3 *SR(w) is a subgraph of SR(w +1).*

Theorem 1 *SR1(w) is the system state reachability graph for the selective repeat protocol with a window size of w.*

Proof. by induction.

Basis. Theorem 1 is true for the cases w = 1,2, and 3, as shown above in Figures 8, 9, and 10.

Inductive Hypothesis. Assume that the SR1(i) graph is the system state analysis for the selective repeat protocol with a window size of i. We must show that the SR1(i + 1) graph is the SSA for a window size of (i + 1).

By lemma 3, the SR1(i) graph can be expanded to the SR1(i + 1) graph.

By lemmas 1 and 2, the SR1(i + 1) graph has 4(i + 1) new nodes and 5(i + 1) new edges. It follows that by the definitions of the SR1(i) graph and the SR1(i + 1) graph, these new nodes are

((i + 1), 0,0), ((i + 1), 1,0),..., ((i + 1), (2i + 2),0) and

((i + 1), 2, 1), ((i + 1), 3, 1),..., ((i + 1), (2i + 2),1).

The new edges are

E_1: {[(i,0,0), ((i + 1), 0,0)},

{(i,1,0),((i + 1), 1,0)},...,

{(i, 2i, 0), ((i + 1), 2i,0)}.

E_2: {((i + 1), 0,0), ((i + 1), 1,0)},

{((i + 1), 1,0), ((i + 1), 2,0)},...,

{((i + 1),(2i + 1),0),((i + 1), (2i + 2),0)}.

E_3: {((i + 1), 2, 0), ((i + 1), 2, 1)},

{((i + 1), 3, 0), ((i + 1), 3, 1)},...,

{((i + 1),(2i + 2),0),((i + 1), (2i + 2),1)}.

E_4: {((i + 1), 2, 1),(i,0,0)},

{((i + 1), 3, 1),(i,1,0)},...,

{((i + 1), (2i + 2),1), (i, 2i, 0)}.

E_5: {((i + 1), 2, 1),((i + 1), 3, 1)},

{((i + 1), 3, 1),((i + 1), 4, 1)},...,

{((i + 1),(2i + 1), 1),((i + 1), (2i + 2),1)}.

The selective repeat protocol for (i + 1) is the same as the protocol for i with the additional states, i +1 and (i +1)A, and transitions, - D(i), + A(i), and R1. This is shown in Figure 11, with the corresponding SR1(i) to SR1(i + 1) graph shown in Figure 12.

Inductive Step. We show the new specification generates the SR1(i + 1) graph, from the SSA. By inductive hypothesis, the SR1(i) part of the new graph is generated by the original selective repeat protocol for i.

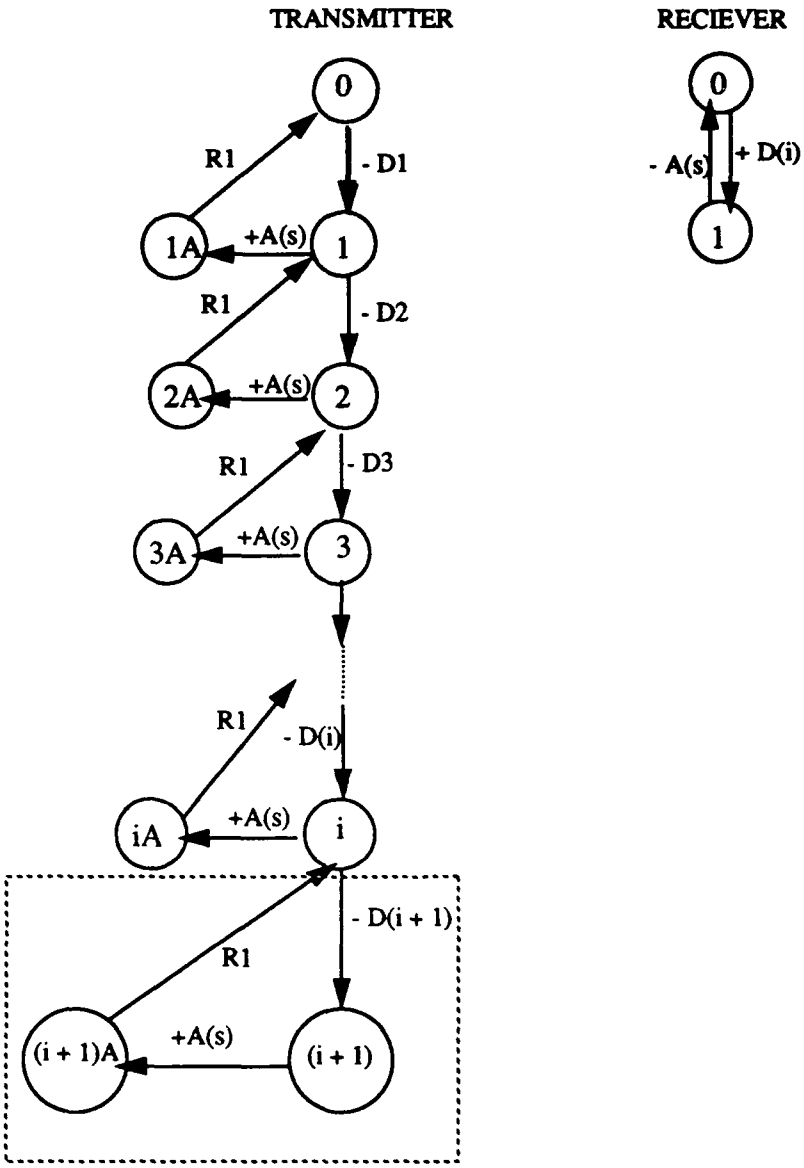

Figure 11: Selective Repeat Protocol for $w = i + 1$.

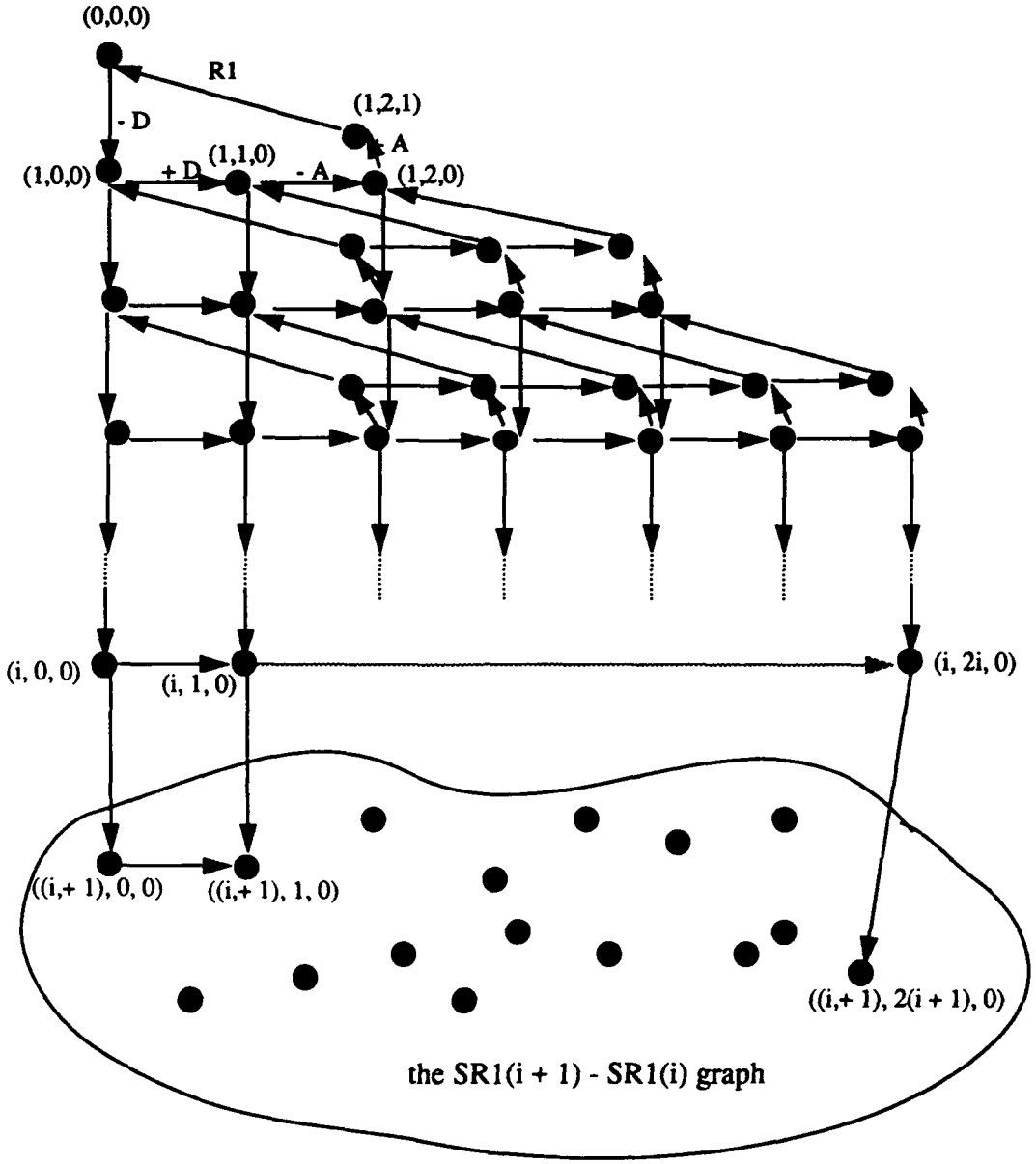

Figure 12: System State Analysis for SR1(i + 1). The lower, encircled part represents the nodes and edges not also in SR1(i).

Suppose the protocol progressed to the system state (i, 0), which in the SR1(i) graph is node (i, 0,0). In this state the - D(i + 1) transition can be taken, bringing the new state, ((i + 1), 0) which corresponds to node ((i + 1), 0, 0). This new node and the edge leading to it from the SR1(i) graph are in the of SR1(i + 1) graph (listed above). From the ((i + 1), 0, 0) node, a +D(i +1) transition will move to node ((i + 1), 2, 0) and if -A(i +1) is the next transition, the state will change to the ((i + 1), 2, 0) node. When the acknowledgment is accepted by the + A(i + 1) transition, the state changes to ((i + 1), 2, 1). If the transmission window is open, when the state is ((i + 1), 2,1) then a possible - D(j) transition can be taken, where j is the next sequence number available for the data packet. The -D(j) transition will bring the state to ((i +1), 3, 1). All of the edges and nodes discussed above are members of the SR1(i + 1) graph, but not part of the SR1(i) graph. If the R1 transition is taken from node ((i + 1), 2,1) instead of the -D(j), the state will be (i,0,0), part of the original SR1(i) graph.

The above sequence of transitions can be repeated for all nodes in the SR1(i) graph from (i, 1, 0) to (i, 2i, 0); with the exception, when starting from the (i, 2i, 0) node, of a possible -D(j) transition from ((i + 1), 2(i + 1), 1). In doing so, all of the edges and nodes in the SR1(i + 1) graph are generated. QED.

VI. CONCLUSION

The first part of this thesis is composed of three sections. The first two provide an overview of the historical milestones in the development of the telecommunications industry and the computer industry, respectively. The third section is an overview of the milestones associated with the merging of the two industries.The milestones chosen and the details given were motivated by the current trends regarding the consolidation of the two fields of telecommunications and computers into the area which is referred to as data communications.Reviewing the problems and issues of the past can better enable us to access potential solutions those we face today.

Many new technologies and services appear to have bright futures,but their success is not preordained. Technological feasibility alone does not guarantee success. It must be coupled with adequate financing and intelligent marketing. Two examples are CATV and satellite communication. The cable television industry observers were confounded when many customers in Los Angeles stuck to the one or two-channel services, though offered multichannel cable at comparable rates. Satellite Business Systems launched the first business-use-only communication satellite with the idea of offering advanced data and video communications to its customers, but found what customers wanted most was the standard voice telephone service.

It is also important to keep in mind that although the data communications industry may produce new products and services, agencies like the FCC set many of the ground rules for their introduction and operation. Fostering the growth of new technologies is not always a simple matter of regulators getting out of the way and letting competition thrive. In some cases a complete hands-off policy leads to a lack of standards and the resulting uncertainty can inhibit technological development. For regulators, the dilemma is how to strike a

proper balance between preserving working systems and fostering their new, improved replacements without causing undue waste and confusion.

In the second part of the thesis, the systems of communicating machines model was used for the specification of selective repeat protocol. The protocol was analyzed for freedom from deadlocks using a method called system state analysis. Both specification and analysis are for an arbitrary window size. The specification of the protocol has a number of states which is linear in the window size. The specification and the analysis are easily understood and have an intuitive meaning. The analysis of the protocol, particularly the reduction in the size of the state space over previous models and the use of induction combined with the system state analysis are particularly adventageous towards understanding and utilizing this protocol.

There is potential for further analysis of the original specification with consideration given to modeling errors and timers. A global analysis of the modified and original specifications are also topics of additional study.

LIST OF REFERENCES

[ABBO 34] Abbot, Charles Greeley ed.,*Great Inventions*, Volume Twelve of the Smithsonian Scientific Series, Smithsonian Institution Series, New York, 1934.

[ABRA 87] Abramson, Albert, *The History of Television, 1880 to 1941*, McFarland and Company, Incorporated, Jefferson, North Carolina, 1987.

[ANDR 89] Andrews, Fredrick T., "The Heritage of Telegraphy," *IEEE Communications Magazine*, August 1989.

[ANTE 82] Antebi, Elizabeth, *The Electronic Epoc*, Van Dostrand Reignhold Company, New York, 1982.

[ASPR 89] Aspray, William, "John von Neumann's contributions to Computing and computer Science," *Annals of the History of Computing*, Volume 11, Number 3, 1989.

[AUGA 84] Augarten, Stan, *BIT by BIT, An Illustrated History of Computers*, Ticknor and Fields, New York, New York, 1984.

[BARN 75] Barnow, Erik, *Tube of Plenty: The Evolution of American Television*, Oxford University Press, New York, New York, 1975.

[BELT 91] Beltz, Cynthia A., *High-Tech Maneuvers: Industrial Policy Lessons of HDTV*, The American Enterprise Institute for Public Policy research, Washington, D. C., 1991.

[BENV 91] Benvenutti, Eugene S., Jr., *Selection and Specification of a Data Link Protocol for VSAT Based Inter-LAN Communications*, Master of Science Thesis, Naval Postgraduate School, Monterey, California, September 1991.

[BROO 88] Brookshear, J. Glenn, *Computer Science: An Overview*, The Benjamin/ Cummings Publishing Company Incorporated, Menlo Park, California, 1988.

[DOER 90] Doeringer, Willibald A., and others, "A Survey of Light-Weight Transport Protocols for High-Speed Networks," *IEEE Transactions of Communications*, Volume 38, Number 11, November 1990.

[FABR 63] Fabre, Maurice, *A History of Communications*, adapted from the French by Chaitin, Vol. 9, The New Illustrated Library of Science and Invention, Hawthorn Books Incorporated, New York, 1963.

[FINK 89] Finkelstein, Joseph ed., *Windows on A New World, The Third Industrial Revolution*, Contributions in Economics and Economic History, No. 88, Greenwood Press, Westport Connecticut, 1989.

[FINN 90] Finn, Bernard, "A Continent Bound by Wire," *IEEE Spectrum*, August 1990.

[GOUL 68] Goulden, Joseph C., *Monopoly*, G. P. Putnam's Sons, New York, New York, 1968.

[HAWL 91] Hawley, George T., *Historical Perspectives on the U.S. Telephone Loop*, IEEE Communications Magazine, March 1991.

[HODG 83] Hodges, Andrew, *Alan Turing: The Enigma*, Simon and Schuster, New York, New York, 1983.

[HOSS 90] Hoss, Robert J., *Fiber Optic Communications Design Handbook*, Prentice Hall, Englewood Cliffs, New Jersey, 1990.

[KVAS 91] Kvaslerud, Olav, *Applications of High Speed Networks*, Master of Science Thesis, Naval Postgraduate School, Monterey, California, September 1991.

[LANE 91] Lane, Nancy D., Margaret E. Chisholm, and K. Michael Malone ed., *Information Technology Design and Applications*, G. K. Hall and Company, Boston, Massachusetts, 1991.

[LUCK 89] Lucky, Robert W., *Silicon Dreams, Information, Man and Machine*, St. Martin Press, New York, 1989.

[LUND 91] Lundy, G. M., and Raymond E. Miller, "Specification and Analysis of a Data Transfer Protocol Using Systems of Communication Machines," *Distributed Computing* , December 1991.

[MACC 91] Maccoby, Michael, "Innovative Genius; The Innovative Mind at Work,", *IEEE Spectrum*, December 1991.

[MART 77] Martin, James, *Future Developments in Telecommunications*, 2nd edition, Prentice-Hall, Incorporated,Englewood Cliffs, New Jersey, 1977.

[MART 90] Martin, James, *Telecommunications and the Computer*, 3rd edition, Prentice-Hall, Inorporated.,Englewood Cliffs, New Jersey,1990.

[MINO 91] Minoli, David, *Telecommunications Technologies Handbook*, Arthech House, Incorporated, Norwood, Massachusetts, 1991.

[MIRA 90] Mirabito, Michael M., Barbara L. Morgenstern, *The New Communications Technologies*, Focal Press, Butterworth Publishers, Stoneham Massachusetts, 1990.

[MODI 91] Modiri, Nasser, "The ISO Reference Model Entities," *IEEE Network Magazine*, July 1991.

[MUES 79] Mueser, Roland ed., *Bell Laboratories Innovation in Telecommunications 1925-1977*, Technical Development Department Bell Laboratories, Murry Hill New Jersey, 1979.

[NYPL 89] "Significant Inventions and Technological Advances" in "Inventions and Scientific Discoveries," *The New York Public Library Desk Reference*, 1989 ed.

[OPPE 83] Oppenheim, Alan V., Allan S. Willsky, with Ian T. Young, *Signals and Systems*, Prentice-Hall, Incorporated, Englewood Cliffs, New Jersey, 1983.

[PARK 84] Parker, Sybil P., ed., *McGraw-Hill Concise Encyclopedia of Science and Technology*, McGraw-Hill Book Company, New York, 1984

[PENZ 89] Penzias, Arno, *Ideas and Information, Managing in a High-Tech World*, W. W. Norton and Company, New York, London, 1989.

[SHER 90] Sherman, Ken, *Data Communications, A User's Guide*, Prentice-Hall, Incorporated, Englewood Cliffs, New Jersey, 1990.

[SING 83] Singleton, Loy A., *Telecommunications in the Information Age*, Ballinger Publishing Co. Cambridge, Massachusetts, 1983.

[SLAT 87] Slater, Robert, *Portraits in Silicon*, The MIT Press, The Massachusetts Institute of Technology, Boston, Massachusetts, 1987.

[SPRA 91] Sparagius, John D., Joseph L. Hammond, and Krzsztoff Pawlikowski,*Telecommunications, Protocols and Design*, Addison -Wesley Publishing Company, Incorporated, 1991.

[STAL 88] Stallings, William, *Data and Computer Communications*, MacMillian Publishing Company, New York, New York, 1988.

[STAR 79] Stark, Henry, Tuteur, Franz B., *Modern Electrical Communication Theory and Systems*, Prentice-Hall Incorporated, Englewood Cliffs, New Jersey, 1979.

[TANE 90] Tanenbaum, Andrew S., *Structured Computer Organization*, Prentice Hall Incorporated, Englewood Cliffs, New Jersey, 1990.

[WRIG 90]"Wright, John W., ed., *The Universal Almanac 1990*, Andrews and McMeel, Kansas City, Missouri, 1990 ed.

INITIAL DISTRIBUTION LIST

Defense Technical Information Center Cameron Station Alexandria, VA 22304-6145	2
Dudley Knox Library Code 52 Naval Postgraduate School Monterey, CA 93943-5100	2
Chairman, Code CS Computer Science Department Naval Postgraduate School Monterey, CA 93943-5100	2
Professor G. M. Lundy, Code CS/Ln Computer Science Department Naval Postgraduate School Monterey, CA 93943-5100	2
Professor Amr Zaky, Code CS/Za Computer Science Department Naval Postgraduate School Monterey, CA 93943-5100	1
Patricia B. Jensen Post Office Box 2200 Patuxent River MD 20670	2