DTIC FILE COPY

(2)

AD-A223 926

NAVAL POSTGRADUATE SCHOOL
Monterey, California

DTIC
ELECTE
JUL 10 1990
S B D

THESIS

THE MARINE CORPS SERVICE PLANNING PROCESS--THE CONTINUAL FORGING AND TEMPERING OF THE SWORD

by

Terry Lee Hilliker

and

William Steven Jesson

December 1989

Thesis Advisor: Nancy C. Roberts

Approved for public release; distribution is unlimited

90 07 9 090

UNCLASSIFIED
SECURITY CLASSIFICATION OF THIS PAGE

REPORT DOCUMENTATION PAGE

Form Approved
OMB No 0704-0188

1a REPORT SECURITY CLASSIFICATION	1b RESTRICTIVE MARKINGS
2a SECURITY CLASSIFICATION AUTHORITY	3 DISTRIBUTION/AVAILABILITY OF REPORT
2b DECLASSIFICATION/DOWNGRADING SCHEDULE	Approved for public release; distribution is unlimited
4 PERFORMING ORGANIZATION REPORT NUMBER(S)	5 MONITORING ORGANIZATION REPORT NUMBER(S)
6a NAME OF PERFORMING ORGANIZATION: Naval Postgraduate School; 6b OFFICE SYMBOL (If applicable): 36	7a NAME OF MONITORING ORGANIZATION: Naval Postgraduate School
6c ADDRESS (City, State, and ZIP Code): Monterey, California 93943-5000	7b ADDRESS (City, State, and ZIP Code): Monterey, California 93943-5000
8a NAME OF FUNDING/SPONSORING ORGANIZATION; 8b OFFICE SYMBOL (If applicable)	9 PROCUREMENT INSTRUMENT IDENTIFICATION NUMBER
8c ADDRESS (City, State, and ZIP Code)	10 SOURCE OF FUNDING NUMBERS: PROGRAM ELEMENT NO; PROJECT NO; TASK NO; WORK UNIT ACCESSION NO

11 TITLE (Include Security Classification)
THE MARINE CORPS SERVICE PLANNING PROCESS--THE CONTINUAL FORGING AND TEMPERING OF THE SWORD

12 PERSONAL AUTHOR(S)
Hilliker, Terry L. and Jesson, William S.

13a TYPE OF REPORT	13b TIME COVERED	14 DATE OF REPORT (Year, Month, Day)	15 PAGE COUNT
Master's Thesis	FROM ____ TO ____	1989, December	142

16 SUPPLEMENTARY NOTATION
The views expressed in this thesis are those of the authors and do not reflect the official policy or position of the Department of Defense or the U.S. Government.

17 COSATI CODES			18 SUBJECT TERMS (Continue on reverse if necessary and identify by block number)
FIELD	GROUP	SUB-GROUP	Strategy; Management

19 ABSTRACT (Continue on reverse if necessary and identify by block number)

This thesis will examine, describe, and analyze the Marine Corps service planning process to determine the extent that it is strategic and effective. It will begin by reviewing the various terminology associated with strategic management. This will be followed by a synopsis of military structures and processes, as well as the external and internal influences which make up the ever changing backdrop for the Marine Corps service planning process. Finally, the Marine Corps service planning process, which encompasses the informal and formal processes that steer the actions, thinking, and planning efforts of the Marine Corps, will be described and analyzed to determine its strategic value and effectiveness. Thesis. (SDW)

20 DISTRIBUTION/AVAILABILITY OF ABSTRACT: ☒ UNCLASSIFIED/UNLIMITED ☐ SAME AS RPT ☐ DTIC USERS	21 ABSTRACT SECURITY CLASSIFICATION: Unclassified
22a NAME OF RESPONSIBLE INDIVIDUAL: Professor Nancy C. Roberts	22b TELEPHONE (Include Area Code): (408) 646-2742; 22c OFFICE SYMBOL: Code 54Rc

DD Form 1473, JUN 86 — Previous editions are obsolete — SECURITY CLASSIFICATION OF THIS PAGE

S/N 0102-LF-014-6603 — UNCLASSIFIED

Approved for public release; distribution is unlimited

The Marine Corps Service Planning Process--
The Continual Forging and Tempering of the Sword

by

Terry Lee Hilliker
Major, United States Marine Corps
BA, University of Hartford, 1975

and

William Steven Jesson
Captain, United States Marine Corps
BA, Cornell University, 1982

Submitted in partial fulfillment of the
requirements for the degree of

MASTER OF SCIENCE IN MANAGEMENT

from the

NAVAL POSTGRADUATE SCHOOL
December 1989

Authors: Terry L. Hilliker William S. Jesson

Approved by: Nancy C. Roberts, Thesis Advisor

Donald E. Summers, Second Reader

David R. Whipple, Chairman
Department of Administrative Sciences

ABSTRACT

This thesis will examine, describe, and analyze the Marine Corps service planning process to determine the extent that it is strategic and effective. It will begin by reviewing the various terminology associated with strategic management. This will be followed by a synopsis of military structures and processes, as well as the external and internal influences which make up the ever changing backdrop for the Marine Corps service planning process. Finally, the Marine Corps service planning process, which encompasses the informal and formal processes that steer the actions, thinking, and planning efforts of the Marine Corps, will be described and analyzed to determine its strategic value and effectiveness.

DTIC COPY INSPECTED 5

Accession For
NTIS GRA&I ☑
DTIC TAB ☐
Unannounced ☐
Justification

By
Distribution/
Availability Codes
Dist | Avail and/or Special
A-1

TABLE OF CONTENTS

I. INTRODUCTION ---------- 1

A. BACKGROUND ---------- 1

B. OBJECTIVES ---------- 1

C. METHODOLOGY ---------- 2

D. DEFINITIONS AND TERMINOLOGY ---------- 2

E. MARINE CORPS CONFIGURATION AND CONTEXT ------ 16

F. ORGANIZATION OF STUDY ---------- 17

II. BACKGROUND ---------- 18

A. INTRODUCTION ---------- 18

B. DEPARTMENT OF DEFENSE (DOD) PLANNING SYSTEMS ---------- 20

C. EXTERNAL FACTORS INFLUENCING SERVICE PLANNING CHANGES ---------- 34

D. INTERNAL FACTORS INFLUENCING SERVICE PLANNING CHANGES ---------- 39

E. SUMMARY ---------- 42

III. MARINE CORPS SERVICE PLANNING PROCESS ---------- 43

A. INTRODUCTION ---------- 43

B. DESCRIPTIVE MODEL OF THE MARINE CORPS SERVICE PLANNING PROCESS ---------- 45

C. THE FORMULATION PROCESS: FORGING THE SWORD ---------- 48

D. IMPLEMENTATION MODES: TEMPERING THE SWORD ---------- 83

E. SUMMARY ---------- 97

IV. ANALYSIS OF THE MARINE CORPS SERVICE PLANNING PROCESS ---------- 99

A. INTRODUCTION ---------- 99

B. BARRIERS TO EFFECTIVE STRATEGY ---------- 100

C. ANALYSIS CRITERIA ---------- 105

D. ANALYSIS OF THE MARINE CORPS SERVICE PLANNING PROCESS ---------- 106

E. SUMMARY ---------- 118

V. CONCLUSIONS AND SUGGESTIONS FOR FURTHER STUDY ---------- 120

A. CONCLUSIONS ---------- 120

B. SUGGESTIONS FOR FURTHER STUDY ---------- 123

LIST OF REFERENCES ---------- 124

INITIAL DISTRIBUTION LIST ---------- 129

LIST OF FIGURES

2-1 Organization for National Security ---------- 21

2-2 Joint Strategic Planning System Documents ------- 24

2-3 JSPS-PPBS Relationships ---------- 28

2-4 DoD Acquisition System ---------- 33

3-1 Marine Corps Service Planning Model ---------- 46

3-2 Marine Corps Organizational Changes ---------- 72

I. INTRODUCTION

A. BACKGROUND

Although planning has always been a hallmark of the military services, recent attention in the form of the Packard Commission (1986), the Goldwater-Nichols Act of 1986 and the reality of resource scarcity following the Graham-Rudman-Hollings (GRH) Act of 1985, have identified planning disconnections between national security goals and budgeted force capabilities. Their resolution has become a top priority. These external forces combined with current leadership initiatives within the Marine Corps have led to significant changes in the Marine Corps' service planning process.

B. OBJECTIVES

This thesis will document the changes that have occurred in the Marine Corps service planning process. Additionally, this thesis will analyze the process to determine if the new service planning process is strategic. Two major questions inform this thesis:

- What is the current service planning process in the Marine Corps?
- To what extent is the Marine Corps service planning process strategic?

C. METHODOLOGY

The methods employed in this thesis are qualitative in nature. Data collection relied on interviews and archival research. The methodology of this thesis proceeded as follows:

- Archival research included a comprehensive review of current military journals, USMC planning publications and manuals, and written organizational procedures, policies and correspondence.

- Seven interviews with Headquarters Marine Corps (HQMC) personnel involved with service planning, which included Secretary for the General Staff, Head of the Plans Division and his assistants in the Strategic Initiatives and Service Plans and Policy Branches, and the Director of the Special Projects Directorate. Representatives from Requirements and Programs Division and Manpower and Reserve Affairs, and Installations and Logistics Departments were also interviewed.

- Ten interviews with Marine Corps Combat Development Command (MCCDC) were conducted. Those interviewed included representatives from the Concepts and Plans, Studies and Analysis, Proponency and Requirements, and Doctrine Branches of the Warfighting Center. Representatives from the Wargaming and Assessment, and Training and Education Centers, including the Director, and Head of the Art of War Division of the Command and Staff College, were interviewed.

- Three interviews with Marine Corps Research Development and Acquisition Command (MCRDAC) representatives, which included the Head of the Resource Analysis Branch and the Adjutant/ Administration officers.

D. DEFINITIONS AND TERMINOLOGY

The terms "strategic planning" and "strategic management" are synonymous and can be used interchangeably. However, we will make the argument that strategic management is a superior term for the military environment.

Strategic planning and strategic management are difficult terms to comprehend, because of the nebulous nature of their social science origin, and because of some natural, inherent bias in our military training and thinking. The three words --strategy, planning, and management, have a separate meaning and/or connotation for military professionals than for those outside the service, and the confounding of these very familiar words can result in a grievous misunderstanding. Therefore, we will discuss some of the terminology used in this paper.

1. Strategy

For instance the term strategy, a generic term, means something different to a military officer than to a corporate manager. According to Karl Von Clausewitz, strategy "forms the plan of war...(that links)...the employment of the battle (engagements) as the means towards the attainment of the objective of the War (ends)." (Clausewitz, 1968, p.241) While to a corporate executive, "strategy is a unified, comprehensive and integrated plan designed to ensure that the basic objectives of the enterprise are achieved." (Quinn, Mintzberg and James, 1988, p.14) The former definition we will refer to as military strategy and the latter as corporate or organizational strategy.

Henry Mintzberg encourages us to expand the definition of strategy from one that considers it almost exclusively a plan, a "consciously intended course of action." (Quinn, et

al., 1988, p. 14) According to Mintzberg, strategy can also be: a **ploy**--a maneuver intended to outwit an opponent or competitor; a **pattern**--consistency in behavior, whether or not intended; a **position**--identifying where an organization identifies itself...in its environment; or a **perspective**--not just a position, but an ingrained way of perceiving the world. (Quinn, et al., 1988) Organizational strategy can be one of these five forms or any combination thereof. Strategy can also emerge from the operating level of an organization and therefore may not be exactly what was intended by the decision makers.

Some of these alternate concepts of strategy are discernible in the Marine Corps' service strategy statement, the Marine Corps Campaign Plan (MCCP). For example, in the Commandant's opening statement, pattern, plan, position and perspective are evident. "We are the Nation's most rapidly deployable and employable expeditionary, combined arms force." (MCCP, undated, p. 1) The incorporation of innovative, high technology equipment, such as the Landing Craft Air Cushion (LCAC), Advanced Assault Amphibian (AAA), CH-53E helicopter and MV-22 Osprey tilt rotor aircraft, represent a consistent **pattern** of behavior that will allow "us to continue to project power into the future." (MCCP, undated, p. 2) It should be noted that the acquisition of this modern equipment is mostly a **plan** to implement the "over the horizon" amphibious assault concept. The Marine Corps has **positioned** itself "as a total

force...task organized as Marine Air-Ground Task Forces. MAGTF's are the premier U.S. combined arms force-in-readiness capable of sustained operations." (MCCP, undated, p. 1) This positioning is with such conviction that it is **perspective**.

2. Planning

According to David Conover, Director of Corporate Planning at Western Electric, "The real planners are the managers who make final decisions, and what we call planning is the support service intended to help make those decisions better." (Helmly, 1988, p. 9) As discussed previously, strategic management is more than planning, but the essence of military strategy is planning. Random House Dictionary defines strategy as "the utilization, during both peace and war of all the nations forces through large-scale, long-range planning and development to ensure security or victory." (Random House Dictionary, 1987, p.1880) According to the USMC Draft Planner's Reference Manual, military planning can be separated into two types: force development planning and operational planning.

> Force development planning is that planning associated with the creation and maintenance of military capabilities. It is largely the responsibility of the military departments, although the JCS provide strategic advice and OSD provides managerial coordination. Operational planning is directed toward the employment of military forces within the context of a military strategy. It is performed by the JCS and the unified/specified commanders. (Draft Planners Reference Manual, 1983, p. 3-1-3)

Force development planning should be the implementation of strategic management decisions, as operational planning is the implementation of military strategy.

a. Department of Defense (DoD) Planning

All services, including the Marine Corps, participate in DoD level planning (joint and PPBS) and conduct their own service planning. Joint planning, which derives the National Military Strategy to support the National Strategy, consists of participation in the Joint Strategic Planning System (JSPS) and the Joint Operation Planning System (JOPS). The Planning, Programming and Budgeting System (PPBS) is the formalized method for force development planning. Ideally, programming and budgeting should implement planning concepts and decisions and not drive them. Service planning attempts to integrate planning, programming and budgeting with the National Military Strategy, so that the organization can best contribute to the overall security needs of the nation. This thesis will focus on the Marine Corps' service planning, during General Gray's tenure as Commandant of the Marine Corps (CMC), to include analysis of recent changes made in the process including the creation of two new commands: the Marine Corps Combat Development Command (MCCDC) and the Marine Corps Research, Development and Acquisition Command (MCRDAC).

b. Service Planning

The service planning process should formulate the service strategy and oversee its execution. Service planning

must integrate and coordinate the service's input to the PPBS to create and maintain an organization that can execute the military strategy derived from the JSPS. In addition to meeting the declared national goals, it must remain within available resources. Therefore, service strategy must provide direction in developing the most effective organization to support higher echelon strategies at an affordable price. As will be discussed in Chapter III, the preparation of combat forces, in the Marine Corps, is accomplished by strategically managing four critical areas: doctrine, structure/organization, education/training, material/equipment. A combination of changes in some or all of the four critical areas may be necessary to create a new, required combat force capability. (Weeks, Pelli, 1987)

Traditionally, the start of the service planning process, after evaluating a threat assessment and receiving Service Chief guidance, has been the long-range plan. The long-range plan, which addressed the period 10-20 years in the future, was designed to guide the organization during this period. However, long-range planning, after close scrutiny by the Packard Commission and Congress, was criticized, along with other types of planning, as being the silent P in PPBS. Short range programming and budgeting concerns had preempted any thoughtful, long-term force development planning.

c. Long-Range Planning

Long-range planning is "rollback" planning, where organizational goals are predicted for the future and then the plans are worked in reverse to provide a path from the future to today. This type of planning lacks flexibility and vision because it "assumes that current trends will continue and plans tend to be linear extrapolations of the present." (Tritten, Roberts, 1989, p.13) Although there have been recent attempts to emphasize and improve long-range planning, it is still not strategic management and may not be able to solve <u>all</u> our force development planning problems. In contrast to long-range planning, strategic management:

> ...analyzes an organization's external environment and internal climate, and searches for trends, discontinuities, surprises and competitive advantages...(and considers a wide) variety of possible alternatives to respond promptly to unforeseen contingencies. (Tritten, Roberts, 1989, p. 2)

Let us make it clear that long-range planning is not strategic management, but that long-range planning, as a component of the service planning process, can have a vital strategic impact, especially during strategy implementation. Formal, systematic long-range planning in the Marine Corps is now done at MCCDC using the Concept Based Requirements System (CBRS) and the trilogy of service plans: Marine Corps Campaign Plan (MCCP), Marine Corps Long-Range Plan (MLRP), and the MAGTF Master Plan (MMP).

d. Summary

The Marine Corps' strategy process, service planning, is the focus of this thesis and will be described and analyzed within the context of strategic management.

3. Management

Management is:

> ...the process of planning, organizing, leading and controlling the efforts of organizational members and of using all other organizational resources to achieve stated organizational goals. (Stoner, Wankel, 1986, p. 4)

Despite this challenging and commendable definition, management is a term that has a severe identity crisis within the Marine Corps. Management is viewed as bureaucratic, insensitive problem solving from behind a desk, by a combat organization that values the example of leading from the front. Despite its unfair bureaucratic label, management encompasses both planning and leadership, and emphasizes coordinating the organization's means towards its desired ends. Management is a richer and more descriptive term than planning and helps add to the meaning of strategic management.

Although strategic management and strategic planning are academically equivalent, we feel that the former lends itself to a more precise and less confusing definition for the Marine Corps. Use of the term strategic management will reduce confusion with the myriad of other planning systems and avoid institutional myopia the word planning will cause. Also, this will reinforce the concept that strategic

management is not long-range planning and is something grander and more vital to an organization.

4. Strategic Management

Strategic management is the means for integration and coordination of the entire organization towards common, achievable and effective goals (ends). (Tritten, Roberts, 1989 and Hofer, Schendel 1978) This definition brings out three points that need to be discussed. One, that strategic management includes both strategy formulation and implementation. Secondly, that strategy formulation (means) includes goal formulation (ends). And finally, the important distinction between effectiveness and efficiency.

The first point is that strategic management can be divided into two phases: strategy formulation ("deciding what to do") and strategy implementation ("achieving results"). (Quinn, et al., 1988, p. 45) However, implementation issues must be considered during strategy formulation because of the need for holistic and continuous thinking. Strategy implementation consists of control and evaluation techniques that provide timely feedback. Feedback is necessary for consideration in continuous formulation thinking, resulting in possible adjustment, change or cancellation to the current strategy.

The second point needing emphasis is that strategy formulation phase comprises both goal formulation (the what) and the means to accomplish those goals through strategy

formulation (the how). "Strategy is the broader concept that includes both goals and the plans designed to bring them to reality." (Heymann, 1987, p. 17) Because service roles are delineated by law and missions assigned by the chain of command, goal formulation can easily be forgotten or isolated from strategy formulation. However, these goals still must be translated by the service, in its service planning process, into something that is understood, achievable and effective. Although ends (goals) and means (strategy) alternatives maybe devised separately, the final strategic decision making process must consider them simultaneously.

The final point differentiates between efficiency and effectiveness. Strategic management assists the organization in choosing effective goals ("doing the right things") that will enable it to survive and succeed. The major limitation of long-range planning is its narrow outlook that concentrates on improving organizational efficiency ("doing things right"). (Stoner, Wankel, 1986, p. 9) This may or may not be the key for organizational success. Even though efficiency is vital for organizational survival, by emphasizing effectiveness an organization can be better prepared to anticipate changes in the environment. An effective strategic management process acts as an "early warning system" that would allow an organization to develop and apply an appropriate strategy to guide necessary organizational change to better meet new threats or take advantage of new opportunities. (Smith,

Allen, Stewart, Whitehouse, 1987, p. 27) Identifying a need for change, formulating goals and subsequent strategies that enable an organization to better adapt to its environment is strategic management and the purpose of the service planning process.

In the corporate world, strategic management should answer the question, "What business should we be in?" In a military context, strategic management should answer the question "What is the most effective fighting organization and how can we field it?" This may mean sacrificing artillery range and tank quality (efficiency) for greater mobility and supportability (effectiveness). Or this may mean contemplating a Marine Corps with unmanned aircraft and the necessary changes to doctrine, structure and training it would entail. Military strategy will answer the question, "When and where is the most effective place for this organization to fight?"

An appropriate analogy would be viewing the entire Marine Corps as a sword. The continual forging and tempering of this sword (making strategic changes in doctrine, structure/organization, education/training, and material/equipment) to give it shape, make it strong and keep the edge sharp is strategic management and the goal of the service planning process. The unsheathing and striking of the sword is the domain of political and military strategy. If the Marine Corps is the Nation's sword and the Nation's senior leaders

the swordsman, then <u>who</u> are the Corps' swordsmiths and <u>what is their process</u> ?

5. <u>Goals</u>

Goals are the ultimate, long-range desires of an organization. They are open-ended, difficult to measure and usually not achievable. (Hofer, Schendel, 1978, p. 20) A goal is what John Bryson considers a vision of success: "a description of what it (the organization) should look like as it successfully implements its strategies and achieves its full potential." (Bryson, 1988, p. 60)

6. <u>Objectives</u>

Objectives are intermediate targets on the path to a goal. They are measurable, have a deadline in which to be accomplished and are achievable. (Hofer, Schendel, 1978, p. 21)

7. <u>Policies</u>

"Rules or guidelines that express the <u>limits</u> within which action should occur. These rules often take the form of contingent decisions for resolving conflicts among specific objectives." (Quinn, et . al., 1988, p. 3)

8. <u>Programs</u>

"Specify the step-by-step sequence of actions necessary to achieve major objectives (goals). They express how objectives will be achieved within the limits set by policy." (Quinn, et al., 1988, p. 3)

9. Doctrine

Doctrine is military policies that act as a broad guide for a leader's actions on the battlefield. "Fundamental principles by which military forces or elements thereof guide their actions in support of national objectives. It is authoritative, but requires judgment in application." (JCS Pub. 1-02, 1987, p. 118) In a larger sense, doctrine can also act as a cultural control mechanism by providing broad guidance for an organization's daily actions and especially during combat in the absence of specific orders.

10. Tactics

"The art and science of winning engagements and battles. It includes the use of firepower and maneuver, the integration of different arms, and the immediate exploitation of success to defeat the enemy." (FMFM 1, 1989, p. 23)

11. Roles

The Marine Corps' Congressionally assigned functions and responsibilities, as contained in the National Security Act of 1947 and follow-on legislation, are its roles or formal mandate.

12. Mission

Purpose or raison d'etre of an organization. The "common thread": "that enables outsiders to perceive where a firm is heading and inside management to give it guidance." (Quinn, et al., 1988, p. 10) It is based on an organization's mandates and the shared values of its stakeholders. A

military mission is: "the task, together with the purpose, which clearly indicates the action to be taken and the reason therefor." (JCS Pub. 1-02, 1987, p. 236)

13. Campaign Plan

A campaign plan is: "a plan for a series of related military operations aimed to accomplish a common objective within a given time and space." (JCS Pub. 1-02, 1987, p. 60) This term pertains to military operations, but the idea is also applied to the preparation of combat forces. (FMFM-1, 1989, p. 86) Therefore, a campaign plan can provide strategic direction for organizational development and change.

14. Maneuver Warfare

Maneuver warfare departs from the traditional attrition style of warfare which emphasizes massed forces, centralized control, and specifically defined goals to physically destroy the enemy.

> Maneuver warfare, by contrast, seeks victory by destroying the enemy's ability to fight in an organized, effective way. Move faster; endure longer; react to changing circumstances better; strike in unexpected places in unexpected ways; go after the enemy's command centers and communications networks, not his main forces.
>
> But in order to work, maneuver warfare requires extreme mental agility and great trust between senior and subordinate officers. Commanders must give mission orders, specifying what they want done, not how to do it. Leaders at all levels, once they know their commander's general intentions, must exercise personal initiative in finding the best way to carry them out. Everybody must be able to disregard old plans and adopt new ones rapidly as circumstances change. And maneuver warfare requires, in peacetime, a system that rewards these qualities. Leaders must be allowed, even encouraged, to make mistakes in training--a challenge for any military establishment, where,

> in peacetime, promotions often go to those with clean records and scant creativity. (Gold, 1989, p. 16)

As will be discussed later in this thesis, maneuver warfare was pronounced, by the Commandant of the Marine Corps, as the official warfighting philosophy and doctrine of the Marine Corps.

E. MARINE CORPS CONFIGURATION AND CONTEXT

Important in discussing strategic management is the need to understand the configuration of the organization being studied and its environment. By configuration we mean the arrangement of parts of an organization such as structure, support systems, power and culture that fit various situations. These situations are called contexts. (Quinn, et al., 1988, p. 572) Essentially, the Marine Corps is configured like a bureaucracy. The characteristics of a "machine bureaucracy" include:

> ...highly specialized, routine operating tasks; very formalized procedures in the operating core; a proliferation of rules, regulations, and formalized communication throughout the organization; large sized units at the operating level reliance on the functional basis for group tasks; relatively centralized power for decision making; and an elaborate administrative structure with a sharp distinction between line and staff. (Quinn, et al., 1988, p. 547)

There is a heavy entrepreneurial flavor to its strategy making because of political and certain organizational circumstances (contexts). As will be described in Chapter III and discussed in Chapter IV, the Marine Corps service strategy process is a hybrid of these two types.

F. ORGANIZATION OF STUDY

Chapter II will provide necessary background data on DoD structure, processes and planning systems and other external pressures, as well as, internal leadership initiatives effecting the service planning process.

Chapter III will **describe** the Marine Corps service strategy formulation process and modes of implementation using a service planning model.

Chapter IV will establish criteria and **analyze** the service planning process described in Chapter III. It will point out strengths and weaknesses in the service planning process as well the barriers to effective strategic management in the Marine Corps.

Chapter V will make some conclusions and suggestions for further study.

II. BACKGROUND

A. INTRODUCTION

This Chapter is designed to acquaint the reader with the various military structures and processes which make up the ever-changing backdrop for the Marine Corps' evolving service planning process. Additionally, the external and internal forces effecting how the Marine Corps accomplishes its service planning from the formulation to the implementation, will be discussed. The service planning process encompasses the formal and informal processes which steer the actions, thinking, and planning efforts of the Marine Corps.

For the Marine Corps, numerous external pressures and internal initiatives introduced in the past few years have resulted in an "overhaul" of the Marine Corps service planning process and how it conducts its business. The changing environment in the form of new political guidance from the Executive Branch, DoD, and Congress, as well as new direction from sources internal to the Marine Corps, coupled with the uncertain international security climate, and the anticipated continual diminishment of resources, have acted as catalysts for the Marine Corps to pursue significant changes in their service planning methodology. Also, the dynamics of the new Commandant has had a prepotent effect on the operations and behavior of the Marine Corps. These external and internal

forces further compelled the Marine Corps to formally link its actions with its plans. (Weeks, Pelli, 1987)

In terms of the formal structured planning process, the Marine Corps has substantially revised its service planning procedures. Although planning has always been acknowledged as one of the most important tasks of management in an organization, in recent years, increased attention has been focused on the military service planning process. As previously indicated, service planning attempts to integrate planning, programming, and budgeting with national military strategy. From James Stoner's and Charles Wankel's definition of management, as provided in Chapter I of this thesis, it is evident that planning in an important part of management. Stoner and Wankel elaborate further by stating, "Before managers can organize, lead, and control, they must make plans that give purpose and direction to the organization, deciding what needs to be done, when and how it needs to be done, and who is to do it." (Stoner, Wankel, 1986, p. 4) Planning is a means for top-management to communicate their "vision of the future" and as discussed earlier, planning, as a component part of both strategy and management is integral to strategic management.

To enhance the service planning process and make it an effective guidance tool for decision making, the Marine Corps began developing a new service planning procedure to integrate its overall planning with national military strategy. The

formal structured service planning process, which the Marine Corps calls the Concept-Based Requirements System (CBRS), will be discussed in detail in Chapter III of this thesis, as well as to how the dynamics of the new leadership has effected the actions of the Marine Corps. First, we will review the major DoD planning systems which have a direct bearing on service planning, followed by a discussion of the external and internal factors influencing the evolution of the Marine Corps service planning.

B. DEPARTMENT OF DEFENSE (DOD) PLANNING SYSTEMS

DoD is a large and complex organization, so we will begin by first describing the command structure and organization of this Department. All the functions in DoD and its component agencies are performed under the general "direction, authority, and control of the Secretary of Defense." (MCI-7701E, 1984, p. 7) DoD is structured to accomplish the Congressional intent as expressed in the National Security Act of 1947, as amended, the DoD Reorganization Act of 1954 and the Goldwater-Nichols Act of 1986. Basically, the Department of Defense includes the Office of the Secretary of Defense, JCS, various defense agencies, military departments and the military services within those departments, and the unified and specified commands. The basic structure of DoD, as delineated by John H. Cushman, is organized into "providers" and "combatants" and is displayed in Figure 2-1. (Gardner, et.

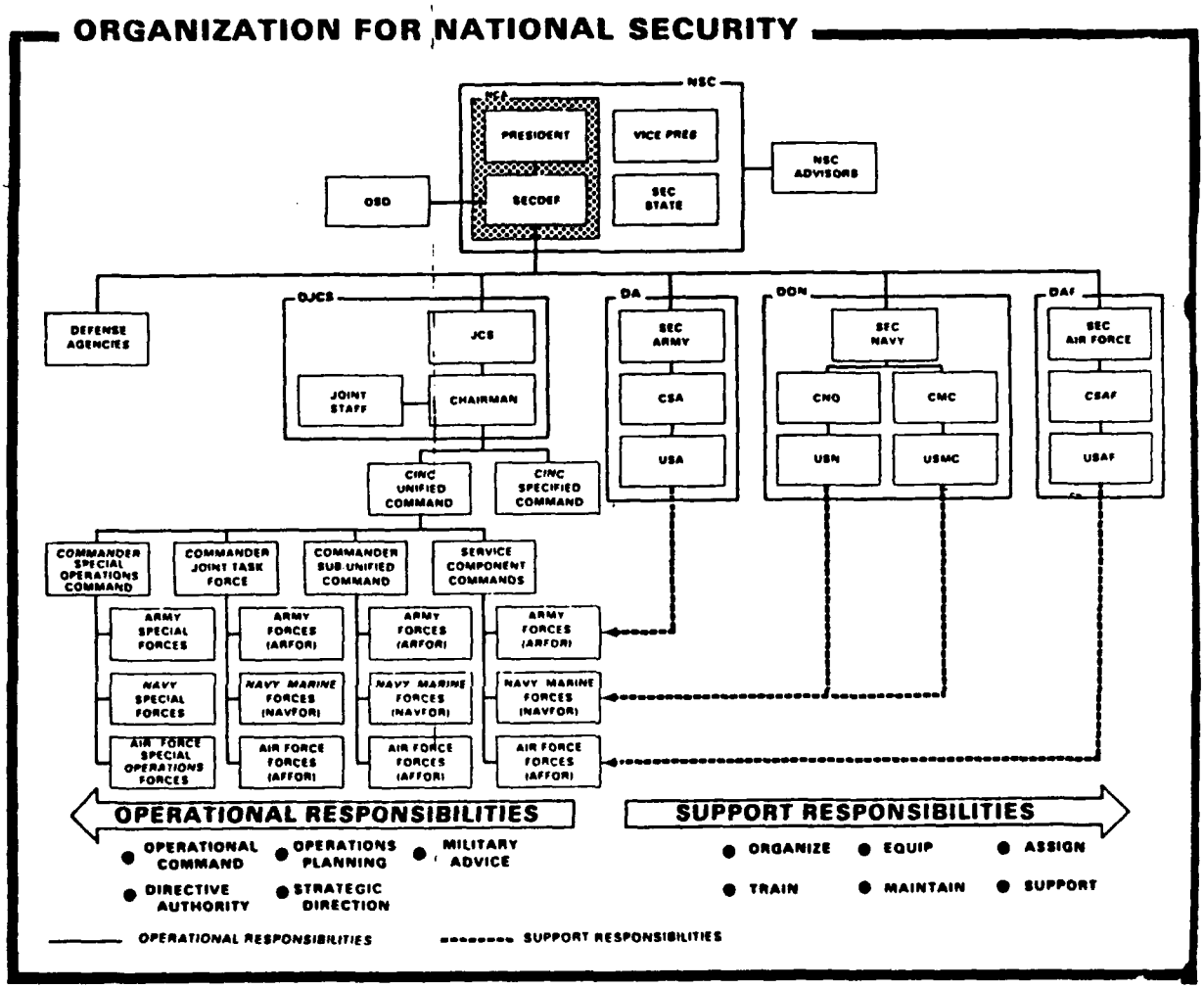

Figure 2-1 Organization for National Security
(OH-3-1A, 1987, p. 2-6)

al., 1978) The "providers" of the military forces are the civilian run miliary departments (Army, Air Force, Navy) and their respective military services. The "providers" are responsible for the preparation of combat forces, but not their employment. The preparation of a combat organization is accomplished by strategically managing four critical areas: doctrine, structure/organization, training/education, and material/equipment. (Weeks, Pelli, 1987) The "combatants" are the unified and specified commands who are responsible for combat force employment. The unified and specified commands and their assigned combat forces are directly responsible to the National Command Authority (NCA) through the Chairman of the Joint Chiefs of Staff (JCS). The Marine Corps is unique in that it is a separate service within the Department of the Navy. The Commandant of the Marine Corps (CMC) falls under the purview of the Secretary of the Navy and is a full member of the JCS.

To handle the complex problems of establishing strategic direction, determining military policy, making resource allocation decisions, and finally translating the funded military capabilities into plans for military operations, DoD uses several complex, interwoven, and extremely involved planning systems and processes. At the service level, the service planning process must also be knitted into the DoD planning processes network. To fully understand the service planning process, and the influencing factors driving it, it

is important to understand the DoD planning systems and their documentation, as well as the interrelationships of these systems. Before discussing the evolution of Marine Corps service planning system, a brief overview of the applicable DoD planning systems will be provided. The DoD planning systems which directly effect the service planning process include the Joint Strategic Planning System (JSPS), the Planning, Programming, and Budgeting System (PPBS), and the DoD Acquisition Process.

1. Joint Strategic Planning System (JSPS)

It is through the JSPS that the Joint Chiefs of Staff (JCS): 1) give military advice to the President and Secretary of Defense, 2) establish the strategic foundation for the Secretary of Defense's Defense Guidance (DG), 3) sets guidance and apportions resources for contingency planning, 4) furnishes planning continuity for the strategic planning process, and 5) provides input into the PPBS. (OH-3-1A, 1987) The JSPS is the Joint Chiefs of Staff's planning method for coordinating and integrating both force development planning (PPBS) and planning for the operational use of military force (JOPS) for all the services. The JSPS uses a series of complimentary documents to accomplish the strategic responsibilities of the JCS. The JCS prepares six documents which directly or indirectly guide the military departments in planning, programming and budgeting, in addition to providing guidance to the unified and specified commanders. The JSPS

planning documents cover intelligence priorities and estimates, roles of U.S. military power, required force structure, projected military capabilities, and risks inherent in current force composition and capabilities. These documents, which interface into the PPBS and the service planning process, are summarized in Figure 2-2 and include the following.

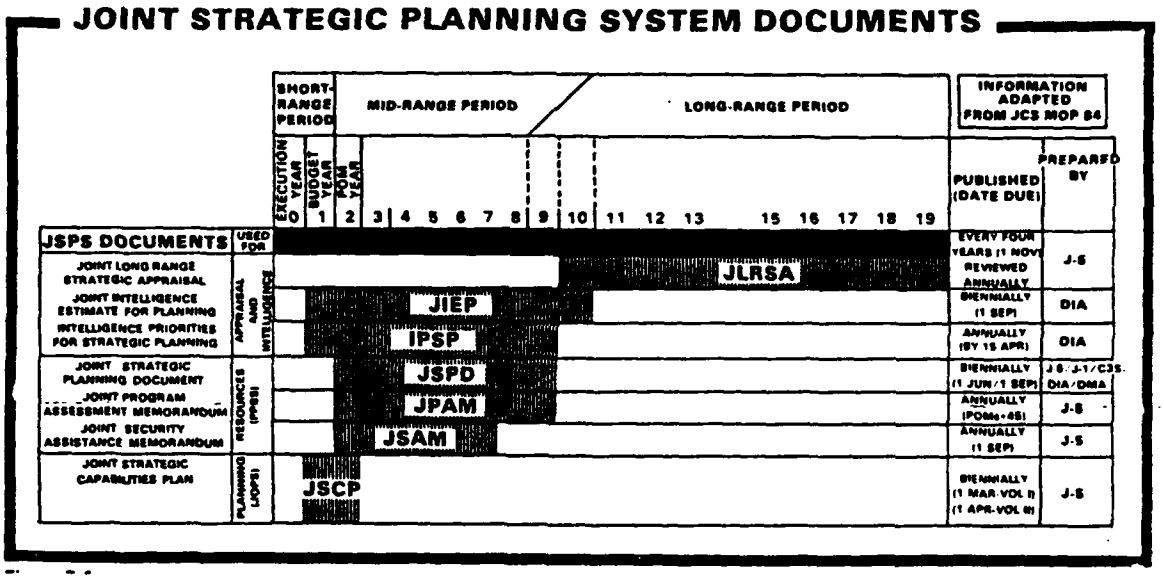

Figure 2-2 Joint Strategic Planning System Documents (OH-3-1A, 1987, p. 5-4)

a. Intelligence Priorities for Strategic Planning (IPSP)

The IPSP advises the Services and CINC's on what their intelligence requirements, priorities, planning, and collection efforts ought to be. The IPSP also advises the Secretary of Defense and the Director, CIA of the military intelligence requirements and priorities required to support the national military strategy.

b. Joint Intelligence Estimate for Planning (JIEP)

The JEIP represents the principal intelligence basis for the JSPS. The JEIP is derived from the IPSP and contains intelligence from the entire intelligence community to include the CIA, DIA, and the Services as well as the Essential Elements of Information (EEI) from the CINC's. The JIEP further provides intelligence estimates on possible worldwide and regional areas of concern that could affect the U.S. national security.

c. Joint Strategic Planning Document (JSPD)

The JSPD is the principle document that advises the President, National Security Agency and the Secretary of Defense on the military strategy and force structure required to support the national security objectives. The JSPD provides a comprehensive appraisal of the threat to U.S. interests and objectives, a statement of recommended military objectives, and the recommended military strategy required to obtain the national objectives. The primary supporting

analysis for developing the JSPD comes from an internal to the OJCS document called the Joint Strategic Planning Document Supporting Analysis (JSPDSA). This document analyses the minimal risk force and develops the planning force that is presented in the JSPD. The JSPDSA consists of three parts: Part I--Strategy and Force Planning Guidance, Part II--Analysis and Force Requirements--Minimum Risk Force, and Part III--Analysis and Force Requirements--Planning Force. (It should be noted that it is anticipated that the JSPDSA will be replaced by three JSPD supporting documents called the Planning Guidance, Military Net Assessment, and the Planning Force.) (AFSC Pub 1, 1988)

d. Joint Program Assessment Memorandum (JPAM)

The JPAM is a risk assessment document and provides the Secretary of Defense the views of the JCS concerning the adequacy and capabilities of the total forces contained in the composite Program Objective Memorandum (POM). Further it assesses the risk inherent in those force capabilities and estimates the abilities of the composite POM to execute the national military strategy.

e. Joint Security Assistance Memorandum (JSAM)

The JSAM is an assessment of the security assistance capabilities programmed in the State Department's budget. The JSAM provides a military view of the security assistance capabilities and is based on an analysis of U.S.

military interests, strategic goals, national objectives and anticipated force levels.

f. Joint Strategic Capabilities Plan (JSCP)

The JSCP serves as a planning directive for the commanders of unified and specified commands, in addition to the Chiefs of the Services, for the accomplishment of military tasks in the short range period (two years). The taskings are based on intelligence information, Secretary of Defense guidance, and the forces expected to be available during the two year planning period. The JSCP represents the last phase of the JSPS and it informs the appropriate commanders how to use the outputs from the PPBS. (AFSC Pub 1, 1988)

2. The Planning, Programming, and Budgeting System (PPBS)

The PPBS is DoD's formal process for making funding allocation decisions. The JCS has a significant part in the PPBS and it is through the JSPS that they provide their requisite background and guidance. The JSPS-PPBS interactions and relationships are displayed in Figure 2-3. "The planning and programming portion of the PPBS is essentially a series of exchanges between the Secretary of Defense and the Military Departments/OJCS resulting in the formulation of defense programs." (Draft Planners Reference Manual, 1983, p. 3-4-1)

Although the PPBS is an iterative and continuous process, for the military services the cycle begins when the JCS issues the JSPD, which provides the Secretary of Defense the JCS views and advice on strategy and gives a summary

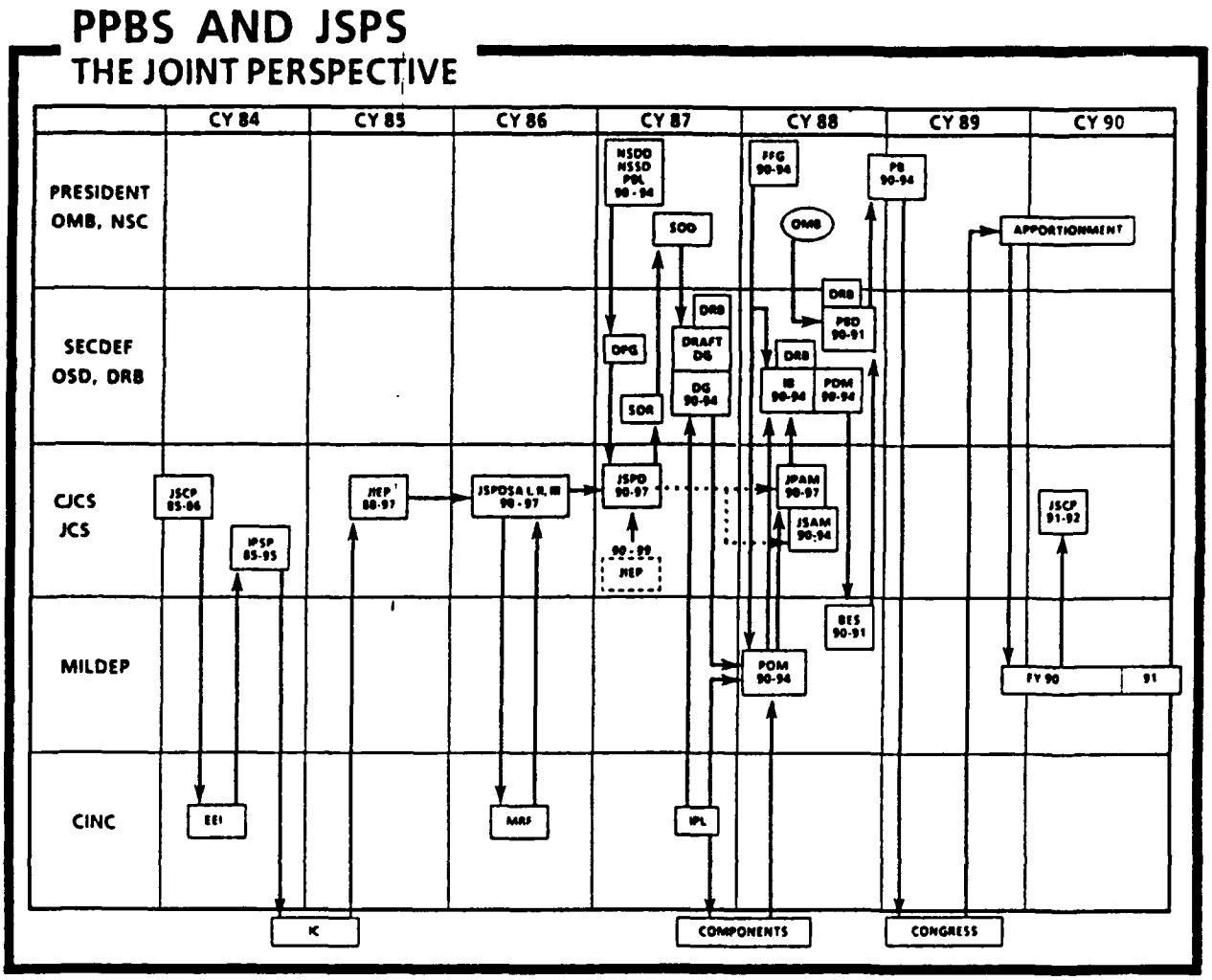

Figure 2-3 JSPS-PPBS Relationships
(OH-3-1A, 1987, p. 2-6)

needed to give reasonable assurance of countering the threat. It should be remembered that the JSPD is a derivative of the JSPDSA documents and the antecedent intelligence documents (IPSP and JIEP). After reviewing the JSPD and other inputs on military objectives and force levels, the Secretary of Defense issues his Defense Guidance (DG). The DG provides the basis for force planning/programming and establishes fiscal

establishes fiscal constraints for the development of the Service's POM. The DG signals the end of the planning phase of the PPBS.

Based on the guidance contained in the DG document, each service develops their POM which contains their objectives for forces, weapon systems, and supporting programs within the fiscal limitations set in the DG. The POM's represent the total program requirements for the years covered in the DG. POM's must also include annexes that show how they have responded to the requirements of the unified and specified commanders. Additionally, the POM provides the rationale for any proposed changes to the Five Year Defense Plan (FYDP). The Service POM's are sent to the Secretary of Defense and JCS.

The JCS provide their assessment of the composite POM to the Secretary of Defense via the JPAM. The JPAM compares the JSPD planning force with the composite POM force recommendations and includes the JCS views on the balance, risks, and capabilities of the POM's forces to execute national military strategy. After reviewing the POM's, JPAM, and having major issues and proposed changes resolved by the Defense Resources Board (DRB), the Secretary of Defense conveys his decisions in a document called the Program Decision Memorandum (PDM). The PDM forms the base for the services' budget submissions. The PMD marks the end of the programming phase of the PPBS.

The services next develop their budget estimates which are submitted through the chain of command to the Secretary of Defense and OMB for review and approval. This review and resultant resolved issues culminates in a series of Program Budget Decision (PBDs) which addresses the allocation of resources contained in each services' budget estimate. Finally, the DoD input into the President's Budget is based on the Secretary of Defense's final decisions regarding the budget estimates submitted by each DoD component. The President's Budget is then forwarded to Congress for review and adjustment. Once the President signs the Congressional appropriations and authorization acts into law, OMB apportions funds to the various military departments. This is followed by the preparation of the JSCP by the JCS. The JSCP contains guidance for the unified and specified commanders, and the services for the accomplishment of the military tasks in the short-term range. From the joint perspective, the planning phase of the PPBS begins when the commanders analyze the scenario, tasks, and threat contained in the precedent JSCP. (AFCS Pub 1, 1988)

The final defense budget has far reaching impacts, long-term consequences, and vast implications, not only for the defensive posture of the country, but also for the overall health of the U.S. economy. It therefore highly scrutinized and extensively reviewed throughout DoD and Congress.

> For many reasons the defense budget is one of the most important documents produced within the U.S. political system...,The defense budget is the linchpin of any national security policy. Plans are basically irrelevant and operations virtually impossible until forces and weapons to support them have been purchased. (Kruzel, Korb, 1986, p. 52)

Although the PPBS is the formal force development planning system, the focus is on short term budgeting and equipment acquisition programming and not truly on long-term force development planning. Unfortunately, the pressures of the budget cycle lead to decisions being made on a short-term, issue by issue basis with inadvertence being shown towards the longer term objectives and the overall broad policies. (Kruzel, Korb, 1986)

As a final note on the Marine Corps participation in the PPBS, it should be noted that the Marine Corps involvement in the PPBS entails a mixture of both Marine Corps and Navy appropriations. The Marine Corps budget submission is eventually combined with the Navy's budget submission to form the DoN budget submission. Therefore, continuous coordination within both the Marine Corps and the Navy is essential.

3. Department of Defense's Acquisition Process

The execution of the PPBS within the Marine Corps must be responsive to, and operate within the guidelines and resultant interactions of the JSPS, DoD and Department of the Navy PPBS, and Congressional budget cycles. Adjunct and complementary to this is the acquisition process. The acquisition of a new weapon system or other military equipment

is a complicated, detailed, and often lengthy process. Although many risks and uncertainties are inherent in the acquisition of new systems, the DoD acquisition system attempts to reduce these risks and is designed to provide an efficient and effective method of acquiring new systems with the use of a uniform set of procedures. The DoD acquisition process normally is divided into four phases, although it can be altered to meet the special needs of a particular system or minimize acquisition time and life-cycle costs, consistent with urgency and technical risk involved. The four phases, which are separated by decision milestones, are shown in Figure 2-4 and consist of the: 1) Conceptual Exploration Phase, 2) Demonstration and Validation Phase, 3) Full Scale Development Phase, and 4) Production and Deployment Phase. (Tactical Systems Acquisition Manual, 1989)

The DoD Acquisition System is tied directly to the PPBS and JSPS and must be closely coordinated and monitored within those two systems. The PPBS provides the fuel (money) and the JSPS shifts the gears for the acquisition machine. The Acquisition Strategy Guide, published by the Defense Systems Management College, states:

> To understand acquisition strategy and place it in proper perspective at the program level, the Program Manager should have an appreciation for the relationship between National Security strategic planning and the acquisition major defense systems. (ASG, 1984, p. 21)

The acquisition process is a costly and time consuming process, and in some cases resulted in an operational system

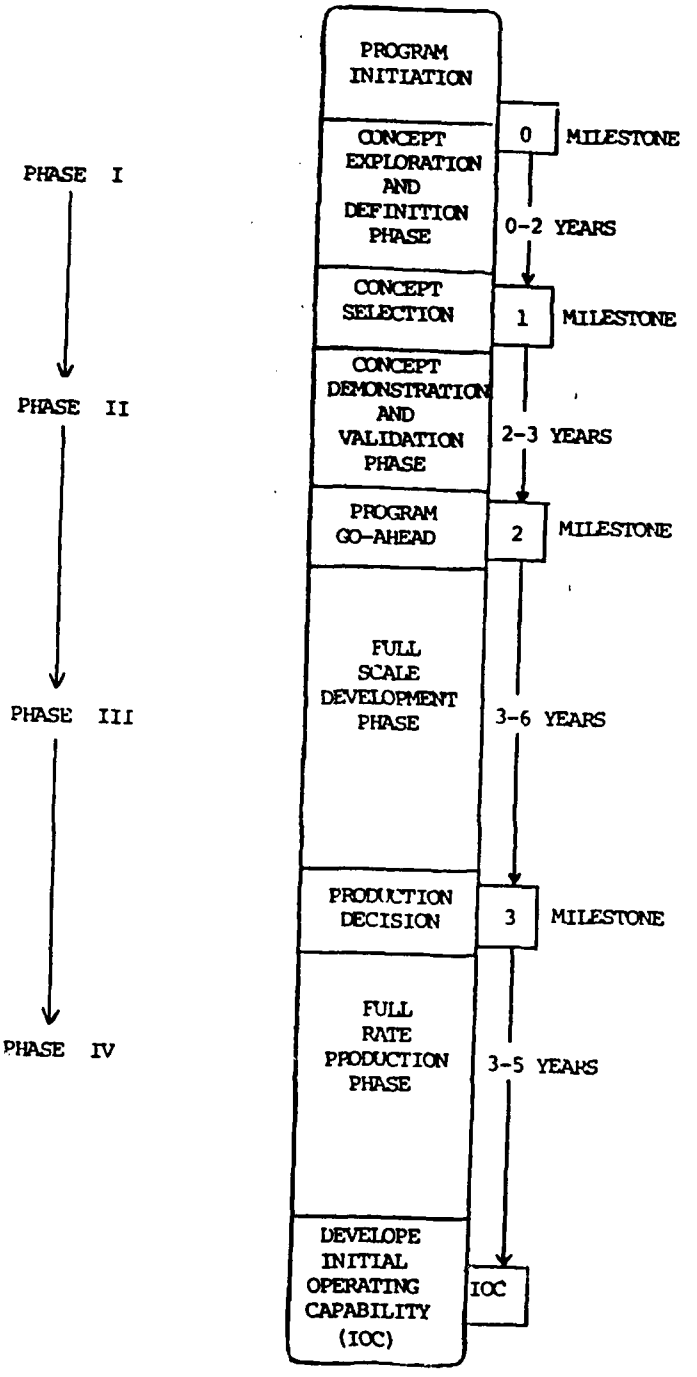

Figure 2-4 DoD Acquisition System (Tactical Systems Acquisition Manual, 1989)

that does not live up to its expectations. For these reasons, the DoD Acquisition Process has received much criticism and many past and present Administrations and Congresses have taken steps and exerted pressure on DoD to improve the acquisition process. Additionally, General Gray recognized that the "existing organization for requirements definition, research, development, and acquisition contained clear inefficiencies" within the Marine Corps. (Tactical Systems Acquisition Manual, 1989, p. i) And one of the goals of General Gray when he became Commandant was to "insure that we get the best equipment into the hands of Marines in the shortest possible time." (Tactical Systems Acquisition Manual, 1989, p. i) As a result, significant organizational changes were made by the Commandant to improve the acquisition process within the Marine Corps. These organizational changes will be described later in this thesis.

C. EXTERNAL FACTORS INFLUENCING SERVICE PLANNING CHANGES

The external factors influencing the Marine Corps service planning process are, for the most part, the same factors effecting the DoD planning processes. The primary external forces directly involved in shaping DoD are the Administration of the President who is the Commander-in-Chief of the Armed Forces; the Congress, which reflects the national mood, resource availability, and world events; and advances in technology.

As a result of the increasing discontentment with the rising defense budget, concernment with the military problems encountered in Lebanon and Grenada, and dissatisfaction with the DOD planning systems, the Administration and Congress implemented several initiatives during the 1980's to review and improve the way DoD conducts its business. First we will discuss the major Administration's initiatives, followed by the Congressional actions intended to improve the our defensive posture. Then a terse overview of technology's role and potential effects it may have on the planning process.

1. Packard Commission

During 1986, President Reagan's Blue Ribbon Commission on Defense Management, commonly referred to as the Packard Commission, issued its report on the national security planning and budgeting. The Packard Commission was tasked with finding ways to improve the effectiveness and stability of defense resource allocation, including the legislative process. The Packard Commission's charter included:

> ...the budget process, the procurement system, legislative oversight, and the organizational and operational arrangements, both formal and informal, among the Office of the Secretary of Defense, the Organization of the Joint Chiefs of Staff, the Unified and Specified Command system, the Military Departments, and the Congress. (HASC No. 99-53, 1987, p. 469)

Shortly after the submission of the Commission's interim report, David Packard, Chairman of the Blue Ribbon Commission, summed up the key recommendations before a Congressional hearing on the matter. In part, his prepared statement said:

> 1. Effective long-range planning, beginning at the front end of the process, to produce a defense strategy and budget based on national security objectives.
> 2. Increasing the responsibility of the Chairman of the Joint Chiefs of staff and getting him deeply involved in this planning process, and
> 3. Most importantly, running the Defense Acquisition process like you would a successful commercial business. The only difference is that the shareholders are the American taxpayers and the profit incentive is world peace. (HASC No. 99-53, 1987, p. 459)

In essence, the Commission's study revealed that DoD and its components needed to improve long range planning, align authority and responsibility, stabilize the acquisition process, and streamline the bureaucracy. All of which affected the way DoD and the services plan. The National Security Decision Directive (NSDD) #219 signed by President Reagan in April 1986 implemented the recommendations of the Packard Commission's interim report. The Packard Commission and subsequent NSDD #219 were the driving forces from the Administration for the services to review their planning procedures and develop military programs which supported the national security objectives.

2. Congress

Appropriately, Congress is the most significant and influential external force affecting the way DoD is organized, the way it conducts business, and the way it plans. Congress grants approval and funds for all defense programs. It mandates manpower levels, determines how many divisions will be maintained, and decides which weapons systems will be purchased. Congressional committees and subcommittees monitor

and pose an ever increasing influence on the management and "oversight" of DoD. Congress has acquired an urge to direct DoD to change course and in the past few years several laws have been legislated resulting in new directions, regulations, and organizations for DoD. (Kruzel, Korb, 1986)

Recently Congress enacted the Balanced Budget and Emergency Deficit Control Act of 1985 (Gramm-Rudman-Hollings Act) as amended by the Deficit Control Reaffirmation Act of 1987 (1987 Reaffirmation Act). These pieces of legislation mandated a deficit reduction and sent a resounding signal of Congress's intention to reduce federal spending. The anticipated reduction in the availability of resources will most assuredly require DoD and its components to improve its planning and program justifications to ensure they support the national strategy. The effects of the deficit reduction efforts were echoed by General Gray. "The greatest issue the Congress and Marine Corps jointly face is how our forces can best contribute to national security within the constraints of the budget." (Gray, 1989, p. 22)

Congress also enacted the DoD Reorganization Act of 1986. In addition to reinforcing the basic constitutional principle of civilian control of the military, this Act, also referred to as the Goldwater-Nichols Act, mandated actions to improve joint military operations and capabilities. It also projected Congressional interests and emphasis on joint military efforts and the services contribution to the national

security. This and other subsequent Congressional actions (Congressional committee hearings, Congressional military reviews, etc.) have indicated:

> ...that Congress intends to spend money only on those forces and programs that support the national strategy....The Reagan Administration and Congress have served warning that each service must program and budget its future in the context of a joint effort. The Marine Corps force development plan must, therefore, support our claim that the Corps continues to make a unique contribution to national defense, and thus remains the best buy in town. (Weeks, Pelli, 1987, p. 34)

3. Technology

Technology also represents an external influential pressure on military planning because, like politics--both national and international, and resource allocation, technology also effects the national strategy. Advancements in technology can and has affected military organization, force structure and doctrine. The technological advancement of nuclear weapons immediately made the U.S. the most powerful nation in the world at that time. "For decades after World War II it appeared that America would reign indefinitely as the world's technological superpower." (Burgelman, Maidique, 1988, p. 1) Although maintaining the technological advantage is extremely difficult, the advent of the atom bomb demonstrates the powerful impact technology can achieve. In the last century, technology has had a growing impact on the military and in can even drive the planning process if the planners start reacting to technology instead of seeking and

developing technology which supports the goals and missions of the organization. (Ferrell, 1981)

D. INTERNAL FACTORS INFLUENCING SERVICE PLANNING CHANGES

1. Center for Naval Analysis (CNA) Study

During 1984, the Center for Naval Analysis (CNA) released a study of the Marine Corps long range planning system. The study found major faults with the Marine Corps planning system and determined that "Long-range planning in the Marine Corps had become a largely meaningless bureaucratic exercise." (CNA Study, 1984, p .1) The study further concluded that the service planning procedure lacked substance and credibility. For planning to be effective, it must be directed and initiated from the top (the Commandant), with active participation of top-level managers--(Strategic players --general officers, staff, etc.) throughout the entire process. However, the study found that the long-range plan was put together with little guidance from the Commandant and no input from the general officers who would be responsible for its implementation. Additionally, the study concluded that the mid-range plan was treated with "disdain by those primarily concerned with programming. If action officers at HQMC made a connection between these plans, it was only by coincidence." (Weeks, Pelli, 1987, p. 34) The three plans produced by the planning system did not guide the decisions being made and there proved to be little correlation between

Marine Corps actions and its plans. The Marine Corps planning had become academic, with its main purpose being to produce documents instead of producing guidance and direction. As a result of this study, the Marine Corps began exploring ways to conjoin service planning and programming with the national strategy, even before the deliberations by the Packard Commission had begun.

2. Commandant of the Marine Corps (CMC)

Obviously, the most influential factor, internal to the Marine Corps, affecting planning is the Commandant. The degree of support and involvement of the top-executive will determine the effectiveness of the organizations planning efforts. Also the degree the top-level management participates in the planning process will determine its strategic importance to the organization. The Commandant is the chief planner and establishes the planning climate for the Marine Corps. General Gray has taken an extremely active part in projecting the Marine Corps into the future. Testifying before a Senate Armed Services Subcommittee General Gray stated:

> The target in our sight picture is the Marine Corps at the turn of the century. We think our plans will take us where we should be ten years from now. They are measured and deliberate, however, so that as we change, we will not limit our ability to respond. We are the Nation's dedicated expeditionary force, ready to go on moment's notice, by any means, to any place on the globe where we are needed. (Gray, 1988, p. 9)

Additionally, the Commandant recognized the need for all Marines to understand the strategic direction of the Marine Corps and has traveled extensively throughout the Marine Corps to expound his vision of the Corps and its future.

General Gray quickly established himself as the Commandant of the Marine Corps and almost immediately implemented many of his ideas and concepts with his "let's get it done" attitude. "General Gray has assumed a nonsense approach to getting on with the program. Specially, he has turned ideas which have been talked about for years into his present-day initiatives, and he's making them happen in his first six months." (Scharfen, 1988, p. 161) However, planning is an extremely important way to achieve an organizations goals and accomplish its missions, especially when funding, manpower, and time constraints exist, as they do in our present world. Not all strategic ideas can be immediately implemented and will have to be nurtured over time, phased in, delayed, or implemented at the cost of other programs.

> Several initiatives were difficult to implement because manning and resources did not increase in either the past or present year's budget. We did, however, accomplish these changes through significant and, in some cases, painful allocations of manpower from within our operating forces and supporting establishment. (Gray, 1989, p. 174)

A diminishing budget effects all facets of the military establishment: manpower, training, weapons procurement, research, develpoment, facilities, and all maintenance. As

resources become more austere, planning becomes acutely more critical. A plan which implements the strategic ideas and changes of the top planner (CMC) becomes an integral part of the strategic management of the organization. The Commandant of the Marine Corps is the single most significant internal influence on how the Marine Corps acts, thinks, and plans. In the ensuing chapters, the impact of the new Commandant and the service planning methodology will be discussed at length.

E. SUMMARY

During the 1980's, numerous external and internal pressures have forced the Marine Corps to review its service planning process and adopt a new methodology. These pressures refocused the service planning process of the Marine Corps and caused significant changes in the action, thinking, and planning efforts of the Marine Corps. In the next chapters, the service planning process of the Marine Corps will be discribed and then analyzed to determine if it is strategically managed.

III. MARINE CORPS SERVICE PLANNING PROCESS

A. INTRODUCTION

The decade of the 1980's had been both good and bad to the Marine Corps. On the good side, the Marine Corps had benefited greatly from Reagan's rejuvenation of the country's military structure. This allowed the Marine Corps to modernize its forces, equipment and facilities. But the 1980's also had its dark sides. Several events had combined together to cloud the Marine Corps reputation and self-esteem. Events such as the Beirut Bombing, Moscow Security Guard Scandal and Oliver North's involvement in the Iranian-arms deal fiasco, coupled with a bureaucratic mist which seemed to surround the Marine Corps served to damage the Corps' standing within Congress, the general public and the Marine Corps itself.

> The Marines were coming off years of bereavement over the bombing deaths in Beirut and embarrassment by the security guard scandals in Moscow. The Corps was a "downer" with the public and almost rock bottom in the hall of Congress. (Jones, 1988, p. 16)

> In 1987, a drawing of a Marine in the blue dress uniform sporting a black eye appeared on the cover of Time magazine....Inside an article speculated on the damage incurred in the "Marine Spy Scandal"....Evidently, articles like Time's have not cost the Marine Corps a single recruit, weapons system, manpower space, strategic commitment, or facility. But harm was done to the Corps' most valuable asset--its reputation. (Scharfen, 1988, p. 160)

> But even as the Marines continued to assimilate the new equipment and train the new, high quality people, it was

> becoming clear that something was still amiss. Some considered the Corps too bureaucratized, its senior officers too politicized, its doctrine and tactics outmoded. And many Marines, like members of an athletic team with more talent than focus, began hoping for leaders who would really shake things up. (Gold, 1989, p. 9)
>
> For the last two or three years the Marine Corps has been mired in a bureaucratic bog. The Marine Corps senior leadership became a group of programmatic thinkers whose acquisition policy appeared to be "How much can we get" rather than "What do we need most to accomplish our mission"? We had lost our credibility, and our backing in Congress; we had alienated our senior retired community: and many in the young officer corps doubted our ability to fight. I think we had lost our uniqueness and were rapidly becoming just another service. At the highest levels we became paranoid. What, at times was honest criticism of our Corps, became a personal affront, and was treated as such.
>
> The Marine Corps needed a "shaking up" and Al Gray has started that process....He is a determined, practical visionary, possessing boundless enthusiasm. With luck he could be the most important impact on the Marine Corps, not only for 1987, but for the next decade. (Scharfen, 1988, p. 161)

The events described above, accompanied with the influencing factors discussed in Chapter II, such as Goldwater-Nichols Act, the Packard Commission study, the CNA long-range planning study and, most of all, the selection of a new Commandant, created an atmosphere for change for the Marine Corps. Certainly the most predominate determinate of change for the Marine Corps has been the appointment, on 1 July 1987, of General Al Gray as Commandant. This thought is reflected in the comment, "the three greatest impact events in 1987 for the Marine Corps were Gray, Gray and Gray." (Scharfen, 1988, p. 161)

The external pressures and internal initiatives led by General Gray, have resulted in the Marine Corps adoption of a

new service planning methodology. This process, combined with the dynamics of the new Commandant, has caused significant changes in the way the Marine Corps acts, thinks, and plans. In this chapter we will describe the service planning process, the continual forging and tempering of the organization.

The service planning process consists of two interwoven, overlapping and interacting phases. These phases are the strategy formulation phase (deciding what to do) and they strategy implementation phase (achieving results). While formulation and implementation issues are difficult to separate in real life, we will make the distinction between the two phases, to allow for a more organized description and subsequent analysis of the process. The two phases of the service planning process will be discussed in detail later in this chapter. However, we will begin by providing a brief overview and descriptive model of the Marine Corps Service Planning Process.

B. DESCRIPTIVE MODEL OF THE MARINE CORPS SERVICE PLANNING PROCESS

The Marine Corps planning process encompasses the formal and informal processes which shape the actions, thinking, and planning efforts of the Marine Corps. A model of the Marine Corps service planning process is depicted in Figure 3-1 and is based on output factors. The model portrays a very simplified version of a very complex process. While the model

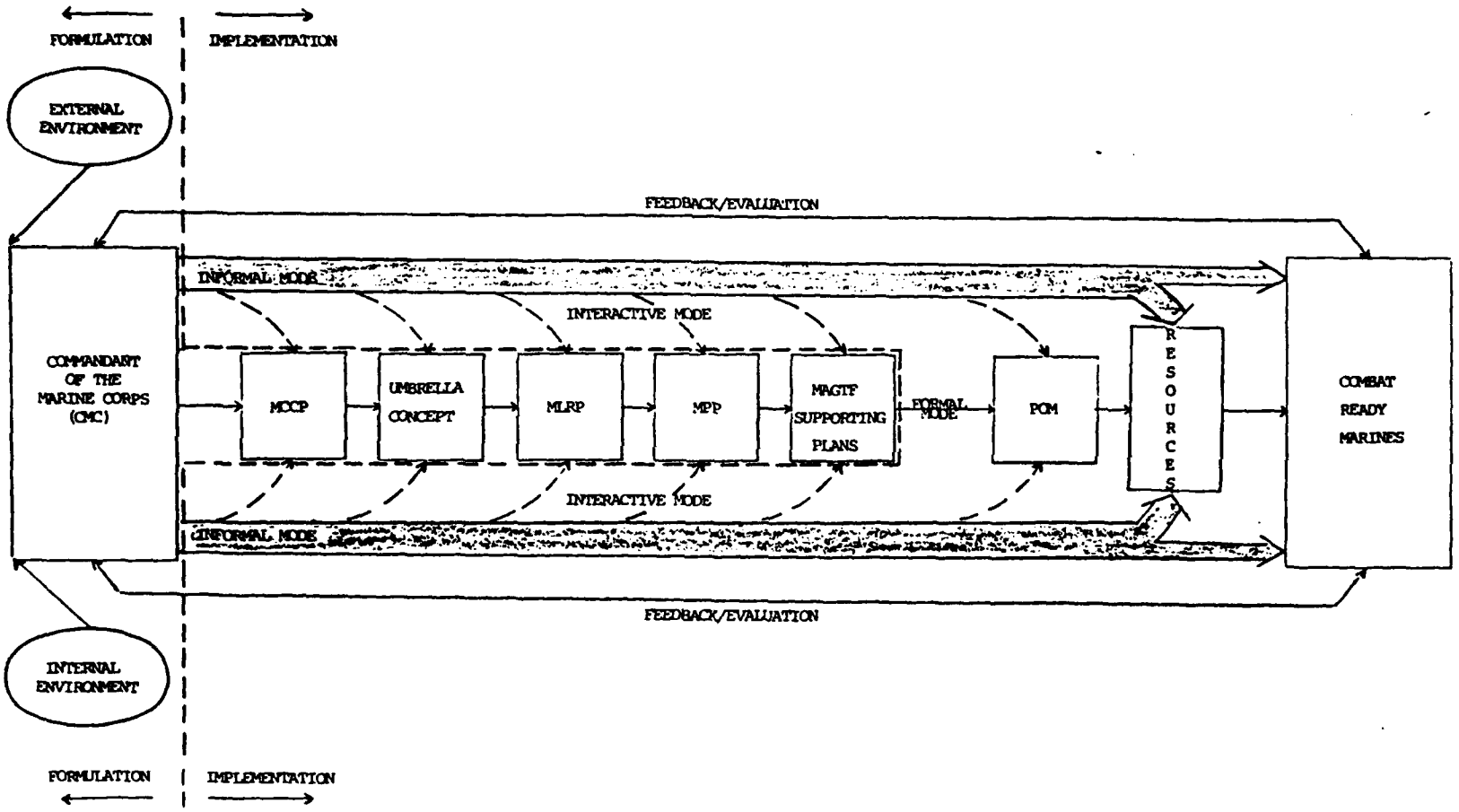

Figure 3-1 Marine Corps Service Planning Process Model
(Adopted from LtCol Ponnwitz Briefing Papers)

appears to show the strategic process as an orderly step-by-step process with a beginning and end point with distinct and discernible components, it must be remembered that the actual process is iterative, interlocking and continuous.

The Commandant, as the Service Chief, is responsible for the service planning process. As such, he is the key strategy formulator and the propellent of its implementation. Additionally, the Commandant, who fulfills a dual role as a member of the Joint Chiefs and the Service Chief, must also link together the external and internal environment to achieve the end results--combat ready Marines.

The formulation phase of the service planning process is: "the process of developing long-range plans to deal effectively with the environmental opportunities and threats in light of corporate strengths and weaknesses." (Wheelen, Hunger, 1986, p. 12) This includes defining the missions, objectives and strategies of the organization. The model only displays the service planning process in the context of key input variables (internal and external environment) and the key output documents (MCCP, Umbrella Concept, MLRP, etc.). However, the formulation process is primarily analytical and the model does not reflect "how" the process occurs. Therefore the formulation section later in this chapter will, in addition to discussing the output documents, provide a detailed description of the key activities of the formulation process. The formulation process can be likened to the

forging of a sword, where the organization is heated and worked into a desired shape.

The strategy implementation phase is "the process of putting strategies and policies into action." (Wheelen, Hanger, 1986, p. 13) The implementation phase occurs in three modes: formal mode, through the structured systematic service planning process (from the MMP and supporting plans through the POM and resources); the informal mode, immediate field execution without delay and aid from the formal planning system; and the interactive mode, a combination and interaction of the first two modes. Implementation is similar to tempering as the heated sword is cooled at a calculated rate to achieve not only its desired shape, but its optimal flexibility and hardness as well.

The model represents a simplified version of the service planning process and will provide for a better understanding of the overall system and should be helpful when the two phases--formulation and implementation--are separated and discussed in detail in the next sections.

C. THE FORMULATION PROCESS: FORGING THE SWORD

The formulation phase of the service planning process is a very fluid, dynamic, non-explicit, non-sequential, concurrent and for the most part intuitively performed. To better describe the key activities of the formulation process they have been broken down into four interrelated steps.

These steps include: 1) Strategic Assessment of Current Performance--an assessment of the organization's current performance/results in light of the current mission, objectives and strategies; 2) Strategic Environmental Assessment and Strategic Issue Identification--an analysis of the external and internal environment and identification of strategic issues; 3) Strategic Coordination and Analysis--coordination and analysis of strategic issues; and 4) Strategic Evaluation and Selection--the choosing of the appropriate strategy and course of action.

The formulating process, consisting of the four interrelated steps, mentioned above, is concerned with developing the organization's mission, objectives and strategies. The formulation phase of the CBRS methodology, recently adopted by the Marine Corps, involves the development of the MCCP, the Umbrella Concept, the MLRP, and MMP and MMP supporting planning documents. Therefore, before describing the four steps in the formulation process, we will briefly discuss the formal documents produced by the process.

It is through the MCCP that the Commandant provides his planning guidance for the development of long-range plans and subsequent planning. The MCCP can best be described from General Gray's introduction to the MCCP.

> The MCCP is the formal means to institutionalize each Commandant's intent for the Marine Corps of today and tomorrow. It is planning, policy, and guidance, broad in scope, which informs and provides direction to the Marine Corps. The MCCP emphasizes the potential of the Marine

> Corps to contribute to the security needs of the nation. It guides the maintenance of a combat-ready and capable force which can be employed rapidly and guarantee success. It also provides institutional accountability, while educating all Marines to the process which lead to effective change. (MCCP, undated, p. 1)

The MCCP does not provide detailed specific directions but is broad in scope. It reflects the Commandant's "vision of the future" and his insight into the Nations's security needs and priorities. The MCCP provides the strategic direction of the Marine Corps and covers the entire scope of the Marine Corps to include warfighting, doctrine, organization, planning, acquisition, personnel, training, professional military education, legislative affairs, and public affairs. The MCCP is intended to provide the requisite front-end focus and direction for the organization's planning efforts. (Ponnwitz, 1989)

The MCCP is followed by the Umbrella Concept. The Umbrella Concept is the next document produced in the formulation phase. The Umbrella Concept is projected out to about 20 years in the future and translates the applicable CMC guidance into long-term operational requirements. The Umbrella Concept contains a brief forecast of the world environment, battlefield characteristics, and the challenges to, and capabilities of, the future Marine Corps. It also includes an overview of potential and most-likely future missions, threats, and technologies. The Umbrella Concept

also provides the concept definition and conceptual framework for the Marine Corps Long-Range Plan. (Ponnwitz, 1989)

> It is not likely that the Commandant will compile his guidance in one document or expressly define which of his objectives are long or short term. The CBRS process really begins when the Warfighting Center defines that guidance through dialogue with the Commandant and his staff and the consolidation of his speeches, articles, congressional testimony, and so forth. This definition of the Commandant's Guidance is the "Umbrella Concept" and forms the basis for developing the future warfighting capabilities of the Marine Corps. Once the Umbrella Concept is produced it must be staffed back to the Commandant to ensure that it really accurately states his perception of the future Corps....The developed concept contains a brief forecast of the future world environment, the challenges and risks, and future battlefield characteristics. It also includes synopses of future probable missions, threats and technologies balanced with historical experience. The result should be a description of future MAGTF employment options, force characteristics, and warfighting concepts. This also has to be staffed to the Commandant. (Ponnwitz briefing papers, undated)

The MCCP and the approved Umbrella Concept forms the basis for the development of the MLRP. The MLRP provides the requisite broad direction and forward-looking guidance by defining goals for the Marine Corps in terms of structure, material, doctrine, and training. The MLRP projects out into the future 10-20 years. The MLRP "foreshadows likely threats of the future and what the Corps must be prepared to do in order to combat them." (MC Gazette, September 1989, p. 4) The development of the MLRP begins with detailed threat and technology assessments. These assessments are coupled with the previously developed concepts from the Umbrella Concept and the guidance contained in the MCCP to form the long-range plan. The MLRP's aim is to "steer other conceptual and

program planners in the development of proposals to change doctrine, training, force structure, and material, and assist in the development of innovative tactics, descriptive concepts, and training and education programs." (Ponnwitz, 1988, p. 2) The purpose of the MLRP is iterated in the introduction to the MLRP itself.

> The purpose of the Marine Corps Long-Range Plan (MLRP) is to define the goals of the Marine Corps of the future which guide the development of doctrine, training, force structure, and material. The MLRP includes a conceptual base from which the goals are derived; the operational and supporting concepts of the MLRP provide information to the National Command Authorities, the Secretaries of the Military Departments, Joint Chiefs of Staff, unified and specified commanders, and the Fleet Marine Forces. The MLRP is designed to be a working document for planners, of readable length, yet providing broad, forward looking, meaningful guidance. The period covered by this document is from the year 2000 to 2010. (MLRP, undated, p. 1-1)

The next step after the MLRP is the development of the MAGTF Master Plan (MMP). The MMP is a replacement for the former Mid-Range Plan. "It is the document that will 'drive programmers' and shape the Program Objectives Memorandum." (MC Gazette, September 1989, p. 4) It is through the MMP effort that the identified goals and deficiencies are adopted into specific capabilities, developmental efforts, and programming strategies. The purpose of the MMP is to "bridge the gap between planning and programming by providing an integrated list of required capabilities and a prioritized set of necessary actions." (Ponnwitz, 1988, p. 3) The MMP identifies and prioritizes MAGTF capabilities which are also reflected in the subsequent subordinate MAGTF Supporting

Plans. The MAGTF Supporting Plans are organized into six volumes as outlined below.

Volume	MAGTF Supporting Plan
Vol I	Users Guide
Vol II	MAGTF Command Plan (MAGTFCP)
Vol III	MAGTF Ground Combat Plan (MGCP)
Vol IV	MAGTF Aviation Combat Plan (MACP)
Vol V	MAGTF Combat Service Support Plan (MCSSP)
Vol VI	Integrated Actions List

The MAGTF Supporting Plans are detailed, action-oriented plans which are originated directly from the MMP and they focus on the mission areas of command, ground combat, aviation combat and combat service support.

> The plans address the concepts and major themes of the MMP by mission area, developing those themes to a greater level of detail than was appropriate for the MMP. The plans also prescribe, in phased sequence, and in priority order, the actions needed in doctrine, organization, training and education, and equipment to achieve the capabilities proposed in the MMP....As derivatives plans, the supporting plans do not deviate from the priorities and overall operational themes of the MMP. Only in the level of detail in which various mission areas are developed are the plans different from the MMP. The Supporting Establishment Master Plan (SEMP) details the non-FMF actions needed to support the objectives of the MMP and the other supporting plans but is not a derivative plan of the MMP. The MMP provides framing guidance and the MAGTF Supporting Plans provide detailed actions, which, when taken together, provide the operational requirements foundation for program objective memorandum (POM) development. (MAGTF Supporting Plans, Vol. I, undated, p. 1)

It should be remembered that the CBRS is relatively new to the Marine Corps and we will not attempt to review or analyze the content per se of the planning documents produced by the process, but will concentrate our effort on the planning process itself.

> Plans are not the objective to be achieved through the planning. The objective of the planning process is the establishment of a mission, goals, strategies, programs, and allocations of resources that will enable the organization to best cope with and influence uncertain future. (Cleland, King, 1978, p. 45)

The prime value of the plan may not be in the document itself, but the process and decisions that have gone into it. As an old military axiom says, "Plans sometimes may be useless, but the planning process is always indispensable." (Steiner, 1979, p. 43)

We will now focus our attention on the key activities of the formulation process and how these documents play in that process. Once again, it must be remembered that although we will discuss the formulation process in terms of four steps,

> ...it is most often an irregular, discontinuous process, proceeding in fits and starts. These are periods of stability in strategy development, but also there are periods of flux, of grouping, of piecemeal change, and of global change. (Wheelen, Hunger, 1986, p. 141)

1. Strategic Assessment of Current Performance

The strategic assessment of current performance is an initial assessment and evaluation of the current performance/ results. Upon confirmation as the Commandant, General Gray already had a feel for where the Marine Corps stood and had definite ideas on where and how he wanted it to go. After all, one cannot forget he has been evaluating the Marine Corps in one capacity or another, from when he first enlisted in the Marine Corps in 1950 as a private and subsequently commissioned in 1952 through the ranks to general officer.

Additionally, each leader brings with him a wealth of knowledge and wisdom gained from his experiences. "Every Commander brings with him the total of his experiences and the ideas of his people." (Gray, 1988, p. 8) It must also be considered that when General Gray was recommended by James Webb, then Secretary of the Navy, he was chosen because of his philosophy, experience, leadership style and how he viewed the overall Marine Corps.

> "I wanted a man who would be the spiritual leader of the Corps," he (Webb) says. Gray embodied the warrior ethos he sought. Further, say Webb, "Al Gray is one of only four or five generals I've met who really understand military history, the use of force in different situations, the utilization of national intelligence assets on the battlefield--basically, the things that made the general 40 or 50 years ago." (Gold, 1989, p. 9)

As reflected in Grace's comments below, there is no way to tell precisely how the Commandant viewed the Marine Corps or the exact analytical processes he used to evaluate the Marine Corps position.

> There is, of course, no way to know exactly what all went into the Commandant's estimate of the situation as he assumed his new duties two years ago. Such an estimate is always the result of a unique, personal mental process peculiar to the individual making it. It is safe to assume, however, that it was influenced by more than three decades of experience and by diligent study of his profession which has been a trademark of the Commandant's over these many years. (Grace, 1989, p. 30)

However, strong clues pointing to his view of the Marine Corps' posture can be gleaned from his public statements and written correspondence and various Marine Corps articles. While he emphatically denies the impressions given by the

media that the Marine Corps was "broken and needs fixing" or was "lacking" at the time he became Commandant, his dissatisfaction with many of the facets of the Marine Corps were evident.

> Let me tell you frankly that we need some improvements before we can claim tactical and operational excellence on the level of my expectations....We need to bring the same cohesive thrust to our peacetime training sections. Therefore, we are creating a Marine Corps Campaign Plan that give the necessary impetus to our training and exercise ....Our training is going back to the basics to emphasize battlefield orientation....We are turning on the brain power to ensure we are using what we've got to our fullest potential....A major effort is being dedicated to studying our force structure....We are streamlining and reorganizing our supporting establishment. Marine Corps Headquarters is being reduced and unnecessary levels of bureaucracy are being eliminated....Our concern is for the Marine Corps as a whole, I intend to build on our strength....I intend to make a number of changes in our policies toward people....I intend to fill Marine Corps ranks from the bottom up. (Gray, April 1988, p. 26)

> We're going to train hard--make our training tougher, get better stability; turn on the brain power and develop ideas....We're going to upgrade our standards of training and education, set higher standards of excellence and toughen up the recruit training process. We are going to make sure everybody is a warrior first. We see, then, a Marine Corps that's fit for service today and that's going to get better in the months and years ahead. (Gray, May 1988, p. 10)

> We're going to ensure that every Marine is a warrior first, that's not negotiable. (Jordan, 1988, p. 28)

> The Marine Corps...will be leaner, tougher, more ready, more disciplined and more professional. (CMC letter dated May 1, 1989)

Much of General Gray's "vision of success" for the Marine Corps he brought with him when he assumed the "helm" for the Marine Corps. And it is this "vision of success" which will become the basis for the MCCP and subsequent Umbrella Concept

and MLRP. In addition to the formal planning documents, General Gray has expended a great effort to ensure his "vision" of the Marine Corps is understood by all Marines. During the first 18 months of his tenure as CMC, General Gray has traveled extensively to "get the Word out" on the direction he is going to lead the Marine Corps.

> (He) has delivered about 150 speeches to almost 100,000 people in more than 100 cities. He's traveled 140,000 miles, met with the Joint Chiefs nearly 100 times and with the President nine times. He's permitted over 40 media interviews and numerous press conferences. In these encounters he makes a point of spreading Marine Corps doctrine and urges others to do likewise. (Jordan, 1988, p. 28)

> Gray goes around the Corps quite a bit, with his vision of the Corps....Gray's words are not pep talks. They are mission type orders. They are commander's intent; the results the Commandant wants. Everybody has to move toward that vision.[1] (Jones, 1988, p. 16)

2. <u>Assessment of the Strategic Environment and Strategic Issue Identification</u>

Before strategies can be fully developed, the Commandant must assess the external and internal environment and analyze the strategic factors. The external environment consists of the variables (opportunities and threats) that exists outside the Marine Corps. The internal environment consists of the variables (strengths and weaknesses) within the organization itself. (Wheelen, Hunger 1986). After the strategic environmental assessment, strategic issues must be identified.

---

[1]<u>Navy Times</u> quote from Bill Lind.

The two major factors impacting on the service planning process--the external environment and internal environment--are linked together by the dual role of the Commandant. The Commandant is both a member of the Joint Chiefs and a Service Chief. He conducts business in the external political arenas of the JCS, DoD and Washington D.C. and translates political desires and tasks, in an understandable and achievable fashion, to his complex, bureaucratic organization. The Commandant, as Service Chief, is solely responsible for service strategy, but he is heavily influenced by both the external and internal environments.

a. The External Environment

The external environment from CMC's perspective can be broken down into two parts: battlefield requirements and political considerations. The traditional military environment, the battlefield, is the main focus when preparing combat forces. A future battlefield for the Marine Corps could include a wide range of enemies with a growing technological capability. Political considerations, in preparing a combat organization that protects a democratic society, are also paramount and can not be ignored. Political forces and factors include the NCA, Congress, DoD, JCS, other services, the media and the public. These factors determine Marine Corps roles and the resources allotted to accomplish them. John Grace accurately described the external environment facing General Gray:

> Looking over an environment of changing international relations, rapidly advancing technology, waning political support and shrinking resources for military purposes, shifting relationships within the Department of Defense and the joint arena, and also within the Department of the Navy of which the Marine Corps is part, General Gray's view of so many variables over which he had little or no control must have been one of great fluidity if not outright chaos. (Grace, 1989, p. 30)

In summary, the external environment, where the Marine Corps must operate in war and peace, is not stable and must be accounted for in the service planning process. Obviously, the Marine Corps does not operate in a vacuum and the external environment plays a significant part in its strategy making decisions and more importantly it is the essence for its existence. However, we will not address each external environmental factor, as many were addressed in earlier chapters, and instead focus on the internal environment.

b. The Internal Environment

The Commandant is the swordsmith who must forge an organization that can succeed on the chaotic battlefields of the future and yet stay within the means of politically allocated resources. The strategic factors within the Marine Corps' internal environment are structure, culture and resources. (Wheeler, Hunger, 1986) The overall structure or "chain of command" for the Marine Corps consists of a clearly defined divisional type structure, typical of military organizations. However, the Commandant does have some latitude to restructure/reorganize, and he recognized earlier in his tenure that "If compatible with present and potential

strategies, a corporation's structure is a great internal strength." (Wheelen, Hunger, 1986, p. 133) Consequently, the Marine Corps Development and Education Command (MCDEC) was replaced by MCCDC and MCRDAC in November 1987 to improve the acquisition process, meet the Goldwater-Nichols, and implement the Packard Commission recommendations. According to General Gray there were two major reasons for this change:

> (1) A diffuse requirements determination process, involving staffing amongst a number of different commands and departments at Headquarters Marine Corps. This resulted in lengthy program initiation and produced a bureaucratic consensus, rather than a focused response to the needs of the FMF Commanders.
>
> (2) An absence of clearly defined lines of authority and responsibility from one agency to another at the production phase. (Tactical Systems Acquisition Manual, 1989, p. i)

Although this organizational overhaul was conceptualized during former Commandant P.X. Kelley's tenure, it was General Gray that carried it through. (Jones, 1987) Within six months of taking office, General Gray took action to solve the two problems listed above.

> To improve this situation, I directed the establishment of two major field commands from existing assets: The Marine Corps Combat Development Command (MCCDC) and the Marine Corps Research, Development, and Acquisition Command (MCRDAC). MCCDC, activated on 10 November 1987, is the Corps focal point for all studies, mission area analyses, doctrine, Marine Air-Ground Task Force (MAGTF) requirements generation, training and education direction, and warfighting conceptualization. MCRDAC, activated on 18 November 1987, is now the sole organization accountable for all tactical systems acquisition. (USMC Tactical Systems Acquisition Manual, 1989, p. i)

Essentially MCCDC is responsible to generate Fleet Marine Force (FMF) requirements and prioritize available resources.

MCRDAC is responsible to devise and execute acquisition strategies. The roles of these two organizations in the formulation process will be discussed later in this section.

The culture of an organization has a powerful influence on an organizations ability to shift its strategic direction. The organizational culture (beliefs, expectations and values) of the Marine Corps is one of discipline, commitment, obedience and pride, and represents one of the Marine Corps' foremost attributes and internal strengths. This internal strength makes the Marine Corps very unique and extremely dynamic.

The resources include financial, physical and manpower assets, as well as organizational systems and technological capabilities. (Wheelen, Hunger, 1986) Each category of resource can be an organizational strength or weakness. Resources are the driving factors of the service planning process because there are never enough of them. However, we will not address each of the functional area of resources because they are not directly within the short-term control of the Marine Corps.

c. Identification of Strategic Issues

The identification of strategic issues--the fundamental policy questions effecting the Marine Corps missions, goals, objectives and strategies, is extremely important because "an organization that does not respond to a strategic issue can expect undesirable results from a threat,

a missed opportunity, or both." (Bryson, 1988, p. 56) Many of the strategic issues facing the Marine Corps were already evident to the Commandant when he assumed that position. Many more will be identified in his assessment of Marine Corps performance and the external and internal environmental factors. Additionally, the Commandant has strategic managers or groupings which assist him in the entire strategic management process. These are the people or groups of people who assist the Commandant in scanning the external and internal environment, and help formulate and implement goals, objectives, strategies and policies.

Basically, there are six groups of strategic players within the Marine Corps that influence service strategy by assisting CMC in identifying, analyzing, and evaluating solutions to strategic problems. The six groups of strategic players are, also, the Corps' swordsmiths and their input mechanisms to the Commandant form a "forge of ideas" that can keep the organization healthy. The strategic groups include the general officer corps, ACMC/HQMC Staff, MCCDC, MCRDAC, Commanders and Marines, and the "Best and Brightest."

The delineation between the identification and analysis of a strategic issue is easy to differentiate, however the same mechanisms which identify the issues are many times involved in analysis of those issues. Therefore in this section we will only provide a brief overview of the strategic groups involved in the strategic management process, with the

understanding that many of the mechanisms to analyze strategic issues are also mechanisms to identify strategic issues. These mechanisms will be discussed in the analysis section.

(1) General Officer Corps. There are approximately 100 active duty and reserve general officers that represent the corporate elite and have significant input to not only strategy formulation, but must actually supervise its implementation as well. General officers are not limited to expressing their views only on issues regarding their individually assigned responsibility. They can express their views on all important issues facing the Corps.

(2) Assistant Commandant of the Marine Corps (ACMC) and Headquarters Marine Corps (HQMC) Staff. HQMC is located in the shared power, multi-goal political world of Washington D.C. The HQMC staff assists the Commandant in accomplishing his charter to prepare combat forces. The Chief of Staff is responsible to direct, coordinate and supervise HQMC staff activities. (HQMCORGMAN, 1989) Currently, the Assistant Commandant of the Marine Corps (ACMC), General J.J. Went is also the Chief of Staff. The CMC-ACMC relationship is best viewed as that between architect and foreman. The Commandant philosophizes on the direction of the Corps and the ACMC executes his vision. The ACMC Meetings handle issues that go unresolved and bubble up from lower levels, it is also a forum for senior leadership and feeds into the strategic decision making process described later. The major

participants are the Deputy Chiefs of Staff at HQMC, and if appropriate or required, the force commanders and the Commanding Generals of MCCDC and MCRDAC. The principles of the HQMC staff, also, meet with the Commandant monthly and/or as required. (Palm, 1989)

(3) Marine Corps Combat Development Command (MCCDC). MCCDC, "the proponents of the MAGTF," is responsible for requirements definition of doctrine training/education and structure/organization and is composed of five discrete, but functionally related centers: Warfighting, Training and Education, Wargaming and Assessment, Intelligence and Information Technology. (Mullarkey, 1989)

(4) Marine Corps Research, Development and Acquisition Command (MCRDAC). MCRDAC is responsible for devising and executing acquisition strategies for the procurement of weapon systems and equipment or simply stated taking "a validated requirement and turning it into reality, in the form of warfighting weapon systems and equipment." (Tactical Systems Acquisition Manual, 1989, p. 12)

(5) Field Commanders and Marines. The Commandant, during his tenure, has made periodic visits to the field. Roughly every six months he visits field commands to talk with not only commanders, but their junior Marines as well. These visits provide CMC with valuable input to solutions of current problems, identify future problems and concerns, and provide feedback on implementation problems.

Also, quarterly FMF Commanders visit CMC and HQMC to discuss the latest issues.

(6) The "Best and Brightest". The best and brightest is essentially anyone in the Marine Corps who possesses a specialized talent or expertise that can be focused within the Commandant's vision. The Commandant assigns these individuals to perform ad hoc studies, meet on temporary committees or attend spot conferences. This best and brightest technique ideally represents his mission oriented leadership philosophy and his desire to "use anyone and everyone to provide a solution" to problems facing the Marine Corps. (Converse, 1989) This best and brightest technique is best exemplified by one-man studies or specialized conferences assigned by or attended by General Gray.

(7) Summary. This section covered the second step in the formulation phase of the service planning process. This step involves the assessment of the overall environment and the identification of strategic issues. While the Commandant is the foremost player in the strategy making process, he is also assisted by the six strategic groups, which are actively involved in the service planning process. The interactions of the Commandant and these six strategic groups, for the most part, will determine the strategic management style of the organization. In the next section, we

will discuss the analysis of the strategic issues and how the Commandant and these six strategy groups interact.

3. Coordination and Analysis of Strategic Issues

Although the Marine Corps has no systematic process to review internal and external environments in their entirety, there are some systematic, very detailed studies done on components of the environment. The Commandant, from his position at the apex of the organization, and as a member of JCS, is in the best position to perceive and analyze the external environment and internal organization in their entirety. General Gray's remarks made before the Senate Armed Services Committee on 16 March 1988 reflect his appreciation for this type of evaluation and analysis prior to deciding on which direction to lead the organization.

> It is my view that it's more important than ever to take a hard look at ourselves, at the military forces that we have today, and the capabilities that are inherent therein. We need to examine where we must go in the future. There have been gradual changes in the international security environment and less gradual changes in the impact of domestic issues on defense policy. We need to recognize them. We need to focus on what's best for the country. (Gray, 1988, p. 10)

The coordination and analysis of the strategic issues will be discussed from the context of the six strategic groupings identified earlier. It should be remembered that although we are discussing the strategic groups separately they are highly interactive and integrated. Also, as indicated previously, the mechanisms discussed in this section can also serve as identification mechanisms.

a. General Officer Corps

Due to their status and vast experience in matters concerning the Marine Corps, the general officer corps represents a significant resource strength. The Commandant recognizes the value of the general officer corps and uses and relies on their talents extensively. While the Commandant will always listen to good ideas, he also has formal mechanisms for the analysis (and identification) of strategic issues. Some of these mechanisms will be discussed below.

(1) General Officer Symposiums. CMC schedules a General Officer's Symposium approximately every six months to discuss strategic issues or in Marine Corps terms a "collection of concerns." The process is relatively the same each time, but is flexible depending on the Commandant's preferences. A message schedules the symposium and requests input for the agenda or topics for discussion from the field. FMF and non-FMF units respond with outstanding problems that are consolidated and bulletized by CMC's Special Projects Directorate. Short briefings are given on each topic, which are followed by a general discussion. A less formalized method has also been conducted featuring a round table discussion without the aide of an agenda. CMC summarizes the symposium and posts an after-action report to all attendees. The symposium is an opportunity for CMC and his generals to hear differing points of view and get a feel for the group

consensus on all the major issues the Marine Corps will face and CMC will decide on in the future. (Converse, 1989)

General Gray held a symposium on December 1-3, 1987 that was attended by 50 senior officers. Each morning was devoted to the wargaming of a potential global crisis and the afternoons to the discussion of a variety of topics selected by the Commandant. The following strategic topics were discussed:

- MAGTF force structure, to include priorities and how the Corps should shape itself in face of probable commitments and mounting fiscal constraints.
- Increased focus on warfighting and operational thinking and techniques/programs to achieve these goals.
- Reorganizations--MCCDC and MCRDAC.
- Standardization throughout the FMF.
- The future of the Corps and the importance of its "expeditionary" nature. (M.C. Gazette, January 1988, p. 8)

Another symposium was held from May 1-5, 1989 for 94 active and reserve general officers and executive service personnel. The first part of the week was spent evaluating a global wargame. The wargaming seminar allowed the participants to discuss national strategy issues, the Marine Corps' role in national strategy, and the employment of Marine Corps forces in global scenarios. The balance of the week was devoted to issues now confronting the Corps such as:

- The Marine Corps role in drug interdiction efforts, including briefings from the Drug Enforcement Agency, the Department of State, the Customs Service, and the Coast Guard. The session was led by LtGen Stephen G. Olmstead

(USMC), Deputy Assistant Secretary of Defense for Drug Enforcement.

- Status reports from the Commanding Generals of Fleet Marine Force, Atlantic and Fleet Marine Force, Pacific.
- Marine Corps family support matters, family advocacy, child care, housing, and medical care.
- Operational tempo and its impact on the Corps.
- MV-22 Osprey program.
- Selected review of Marine Corps research and development program.
- Review of officer force management structure.
- Updates on warfighting enhancements. (M.C. Gazette, July 1989, p. 4)

Also, other types of symposiums are held that concentrate on a certain area such as the Assault Support Symposium held on January 23-27, 1989. The theme was "Marine Aviation--The Year 2000 and Beyond" and involved senior aviation leaders from HQMC, MCCDC, MCRDAC and the FMF. The symposium discussed significant aviation issues, the draft MAGTF Master Plan, which included discussion of equipment, training, tactics and doctrinal priorities, and the new Marine attack and observation aircraft concept under development. Symposium recommendations will become potential input into formal planning and programming processes via the MMP and POM. An after-action report analyzing the symposium's highlights and recommendations will be distributed to major FMF commands (active and reserve). That report will become an input to the Program Objective Memorandum process, doctrine development,

and training plans for the entire assault support community. (M.C. Gazette, March 1989, p. 4)

(2) General Officer Wargaming Seminars. Wargaming seminars, for the general officer corps, are held periodically throughout the year and are separate from those held concurrently with the symposiums. Four wargaming seminars have been held since General Gray directed the creation of MCCDC and its Wargaming and Assessment Center. Thirty generals participated in Policy and Wargame IV, held from October 10-12, 1989. According to the director of the Center, "General A.M. Gray, the Commandant of the Marine Corps, wants his general officers to participate in these type of wargames, which allow them to polish their skills in strategy formulation and campaign planning." (Ruby, 1989, p. 1) Wargaming is not new for the Marine Corps, but a wargaming seminar devoted to experiencing general officers to warfighting, intelligence, logistics and politics at the National Security Council, regional theatre command and joint task force levels is. In an era of budget constraints, wargaming is not only an inexpensive way to train, but may be the only way to simulate situations that can bring critical issues to light.

b. Assistant Commandant of the Marine Corps (ACMC) and Headquarters Marine Corps (HQMC) Staff

The Assistant Commandant, who acts as Chief of Staff, holds an ACMC Committee Meeting at HQMC, as required.

General officers, serving as heads of the staff functional areas, discuss roles of the Marine Corps as they pertain to their responsibilities. The ACMC Committee influences CMC decisions as follows:

- "Blesses" POM before CMC review.
- Reviews contentious issues and makes recommendations to CMC.
- Final advising body on all "big ticket" issues.
- Provides recommendations to CMC on execution issues that could lead to modification of service strategy. (Palm, 1989)

This group can quickly provide the Commandant with the latest concerns in the turbulent, political environment HQMC operates in.

c. Marine Corps Combat Development Command (MCCDC)

MCCDC was designed to increase the Marine Corps "efficiency in training, education, planning, material requirements identification, and concept and doctrinal development." (Gray, 1987, p. 2) As previously discussed, the organization was established by General Gray from components of the former MCDEC and consists of five centers-- MAGTF Warfighting Center, Training and Education Center, Intelligence Center, Wargaming and Assessment Center, and Information Technology Center. As depicted in Figure 3-2, MCCDC is the centerpiece of the Marine Corps organization. Its mission is to develop and assess concepts, prepare plans, determine material requirements and manage the training and

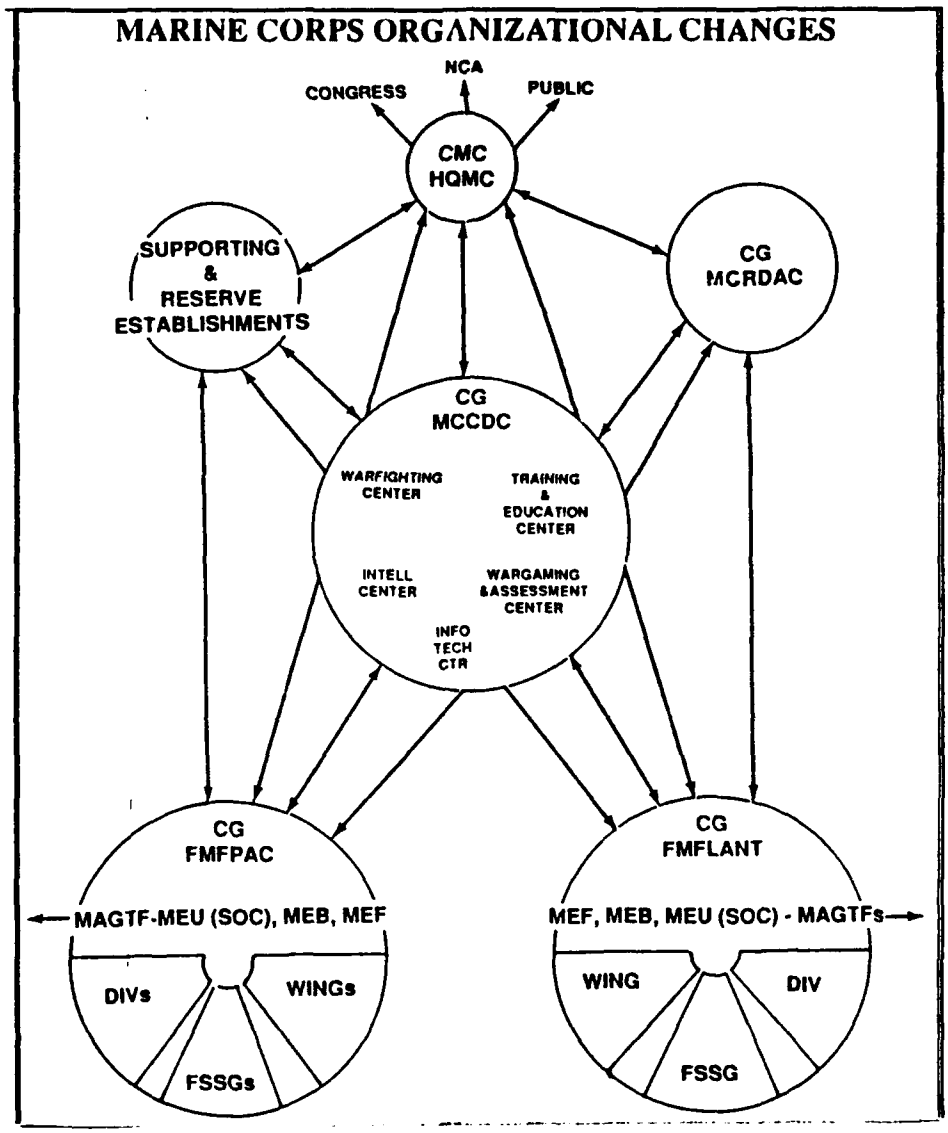

Figure 3-2 Marine Corps Organizational Changes
(Grace, 1989, p. 30)

education of the Marine Corps. (Grace, 1989) The roles and functions of each of the centers within MCCDC will be discussed below.

(1) MAGTF Warfighting Center. The MAGTF Warfighting Center is responsible for the development of operating concepts and doctrine, improve the Marine Corps analysis of force structure and material requirements and enhance doctrinal coordination with other Services and Allies. It is also responsible to coordinate and generate the mid- and long-range plans for the Marine Corps with the active participation of HQMC and the FMF. During formulation, service strategy concepts are analyzed for strengths and deficiencies. Deficiencies in the current force are identified through mission area analysis and feedback from the field. Alternatives are analyzed, then decisions and strategies are integrated, as appropriate, into the formal detailed plans of the CBRS. The Commandant has final approval on the Warfighting Center's recommendations before they are incorporated into the planning documents.

(2) Training and Education Center. The Training and Education Center oversees the challenges to improving training and professional military education (PME) within the Marine Corps. Many of the Commandant's initiatives and changes such as warrior training, PME reading program and the Marine Corps University will be monitored by this Center.

(3) Wargaming and Assessment Center. This center will provide the means to assess concepts and doctrine and assist in the training of present and future commanders and staffs.

> It is essential that the Marine Corps have state-of-the-art wargaming capability that allows us to assess the effectiveness of doctrine and hardware in countering the threat spectrum. Such a center will help produce quick-thinking operationally responsible commanders and staff officers; and through modeling and simulation, it will provide the Marine Corps the advantage and opportunity of exercising new operational ideas to counter known and anticipated threats. The Wargaming and Assessment Center will be a vital link in the production of sound doctrine for our Marines in the coming years, and it will provide valuable service to the Fleet Marine Forces and to our professional schools. (Gray, 1987, p. 4)

Semiannual general officer wargaming, discussed earlier, is not the only responsibility of the Wargaming and Assessment Center. Besides coordinating and developing wargames for other Marine Corps schools and training centers, the Center is also tasked to provide modeling and assessment for the Warfighting Center. Alternative structure, doctrine, training and equipment changes contemplated and analyzed by the Warfighting Center are modeled and further assessed by the Wargaming and Modeling Center. Modeling identifies other potential and related problems the alternative created and therefore allows for a thorough analysis. Senior decision makers and long-range planners observe and evaluate the alternative modeling efforts in a learning process. Critiques of wargames or modeling efforts can provide new innovative solutions, or give rise to new strategic issues and problems.

These new variables are then added to the wargame in a learning process that gives the planners a better appreciation of the full scope of the problem, as they search for a better alternative. (Ponnwitz, 1989)

(4) Intelligence Center. The Intelligence Center's primary responsibilities are to conduct threat analysis, promote intelligence awareness and provide intelligence support.

> Solid, reliable threat analysis lends itself to on-target material requirement profiles, appropriate training and education, sound concepts on which to base our doctrine, and optimal short- and long-term operational planning. For these reasons, the location of a capable, resourceful intelligence agency at Quantico is vital to the effectiveness of MCCDC. This center must and will work hand-in-glove with other centers providing information on which to base concepts, plans and doctrine. (Gray, 1987, p. 4)

The Intelligence Center will enhance environmental assessment capabilities in the most likely conflict areas: expeditionary operations and small wars. The focus of the center will be on "forecasting the threat environment for low intensity and unconventional warfare and in drawing on existing intelligence assets and tailoring them to specific Marine Corps needs." (MC Gazette, March 1989, p. 6) But it will also analyze resources and missions and make recommendations on structure, training, doctrine and equipment changes. The Center will not duplicate existing intelligence capabilities, but will plug a crucial gap. General Gray plans for the center to become "a model of all source, fused and tailored intelligence...

interacting with the FMF and HQMC." (MC Gazette, March 1989, p. 6) The Marine Corps Intelligence Center is not only a strategic creation, but will greatly assist in the strategic management process in the future by relating the operational environment to the organizational environment through recommended force development changes and by closely coordinating headquarters and field concerns.

(5) Information Technology Center. The Information Technology Center will provide the requisite information and networking systems, within and between MCCDC, HQMC, operational forces and the supporting establishment.

> We are all aware of the pressing need for rapid transfer of information. To fail in this area is an admission of inefficiency at best and a loss of control at worst. We must institute measures through our Information Technology Center to ensure any shortcoming in this area is avoided. (Gray, 1987, p. 4)

MCCDC and its five Centers are the key to the service planning process and with its most important function is to act as the sponsor for the MAGTF's.

> This is where the ideas, plans and resources are brought together to insure that Marine Air-Ground Task Forces are, in fact, the fully integrated fighting systems that CMC represents them to be to the NCA and the Unified Commanders. (Grace, 1989, p. 31)

d. Marine Corps Research Development and Acquisition Command (MCRDAC)

MCRDAC is responsible and accountable for all equipment acquisition matters and, therefore evaluates and implements all equipment and material changes.

> The Commandant decided on the need for a command that would have nearly complete responsibility for satisfying the tactical equipment needs of the Corps as expressed by (MCCDC)....The clear cut intention is to speed up and streamline the acquisition process....Requirements will be determined at MCCDC and passed to MCRDAC for speedy and economic satisfaction and for delivery to the user...the fundamental reason for MCRDAC is to guarantee that the Fleet Marine Force Marines are equipped with the means of combat that contribute to victory. (Winglass, 1988, p. 12)

e. Conferences and Visits with Field Commanders and Marines

Some of the most valuable input CMC receives is during visits to field commands. These Commanders' Conferences provide crucial feedback on not only implementation problems of current strategy, but on new opportunities and threats that can be acted upon. General Gray held an "FMF Commanders' Round Table" at Camp Pendleton for 20 senior FMF Commanders from August 9-11, 1989. The purpose of the meeting was to exchange ideas on important issues and developments. The following crucial topics were on the agenda:

- The Marine Corps as a national force in readiness in a changing international environment.
- Improving MAGTF closure times.
- Future requirements for maritime pre-positioning forces.
- Smart extended range munitions.
- Combat service support structure, capabilities, and manpower reductions.
- Development of armor and antiarmor concepts.
- Over the horizon operations without the MV-22.
- End strength reductions.

- Comparison of the air defense variant of the Light Armored Vehicle (LAV-AD) with Pedestal Mounted Stinger (PMS).
- Artillery reorganization.
- Substance abuse.
- Deployment constraints on women Marines and single parents.
- Passenger restrictions for medium and heavy helicopters.
- Staffing of remotely piloted vehicle companies.
- Reorganization of light armored infantry units. (M.C. Gazette, September 1989, p. 4)

During General Gray's visits, commanders are not his only interest. He has been known to make unannounced visits, and bypass the chain of command to talk to Marines to get a feel for what is actually going on.

> He seems more comfortable talking to colonels than generals. He flies down to Marine Corps Air Station Cherry Point, arrives unannounced and roams all over the base for six hours before the Commanding General even knows he's there. (Gold, 1989, p. 9)

This is to emphasize that General Gray listens to everyone; not just his generals.

> He still is a contact man. His aides know there is no such thing as a straight line when Gray goes from point A to point B. If there is a Marine between, Gray swerves for a talk, often punctuated with body punches....Such physical communication may appall board room directors, but Marines revel in it. It's like being patted on the back by Dad, Marines say. (Jones, 1988, p. 16)

General Gray has opened up the lines of communication with his leadership style and has been well received within the ranks.

General Gray has emphasized the importance he places on getting ideas and suggestions from <u>all</u> Marines. He

has sought ideas and innovation from the lowest echelon by encouraging Marines to "turn the brain power on." "The one message I want relayed to all Marines--active, reserve, and retired and all friends of Marines--is turn on the brain power and help make your Corps what you want it to be." (Gray, 1988, p. 17) "Gray has said hundreds of times that he wants thinking Marines and ideas expressed 'from the bottom up.' He has also said that he believes young troops should be recognized more than they are." (Jones, April 18, 1988, p. 5) He has rewarded those who do. With much publicity, he personally awarded PFC Neil Wadley with a Navy Achievement Medal for his innovative suggestion to use an inverted forest firefighters' thermal protective blanket in order to reduce the heat signature of modern electronics equipment. (Jones, April 1988, p. 5)

f. "Best and Brightest" Technique

CMC will choose quality people to take a general idea and develop it fully into something that can benefit the organization. A one-man study, usually lasting approximately 60 days, will be initiated and fully supported by the Commandant himself. CMC will give broad mission type guidance and then provide "overwatch" for the study. CMC believes committees are killers! The individual, who is totally accountable for his/her efforts, will collect information, examine it and brief a recommendation directly with the Commandant. The individual is normally given complete

freedom, has no additional duties and is able to cross command and staff boundaries. The individual must present a consensus that can be implemented in all force units, overseas and on both coasts. The study, once briefed, is routed to commanders and staff that will have to implement the recommendations. CMC's decision is based on the studies' recommendations and input from the formal command structure. The accountable individual will usually be tasked with overseeing the implementation of the idea he or she championed. (Kopca, Converse, 1989) This process according to General Gray:

> We recognized a window of opportunity that would allow us to make necessary change--but we had to act quickly. We looked at the lessons learned in previous studies, concepts and reports and revisited techniques that had served us well in the past. We then assembled some of our best and brightest officers and charged them with identifying the changes needed to make the Corps better.
>
> Herein lay our formula for success in institutionalizing change. Our junior leadership generated ideas and identified the basic means to implement them; our senior leadership validated these ideas. Together we committed ourselves to accomplishing them while staying within current resource limits. We avoided the lengthy, bureaucratic staffing process that can so often stifle or kill a worthwhile concept. (Gray, 1989, p. 21)

This technique was used in recent force structure changes, the creation of MCCDC/MCRDAC, and the writing of FMFM 1, all of which proceeded in a rapid manner. More will be said about these examples later in this chapter.

In a similar fashion, the Commandant will gather a talented group of individuals together at a conference and challenge them to solve problems they have first hand knowledge of. For instance, the Artillery Conference, August

14-18, 1989, brought together specialists in artillery from around the Marine Corps. General Gray challenged them with the question, "What should Marine Corps artillery look like in the future?" (Converse, 1989) Some of the changes recommended by artillery's best and brightest were as follows:

- That HQMC, MCCDC, and MCRDAC aggressively pursue the development and acquisition of new equipment in POM 92-97. A lightweight 155mm towed howitzer and the Multiple Launch Rocket System (MLRS) to replace, respectively, the mobile, but ancient 105mm howitzer and very heavy self-propelled guns was recommended.

- That MCCDC develop an organizational structure to support the fielding of lightweight 155mm howitzer battalions and MLRS batteries. A proposed force structure for the interim and desired period, that fits into the current direct and general support artillery doctrine, was also recommended. (ACMC memo 5050/ACMC:67 dated September 7, 1989)

Following input and approval from ACMC and the Commanding General of MCCDC, the Commandant moved to have these recommendations implemented quickly. Although the Commandant is not adverse to risk, he tempers his decisions with judgment, and other decisions, such as a recommendation to keep trained lieutenants in the artillery units longer, was held in abeyance until the recommended solution was validated and reviewed by appropriate staff and by the formal channels of the organization. Upon completion of this review the recommendation was not implemented due to other constraints surfaced in the review process.

4. Strategic Evaluation and Selection

Once the strategic issues are identified and analyzed, the courses of action or alternatives must be evaluated and finally the best strategy selected for implementation. The Commandant decides from the alternatives presented, after considering all applicable external and internal environmental factors. While it is impossible to actually view the Commandant's thought processes, there are basic considerations in the strategic decision making process.

> An effective strategy must meet several criteria. It must be technically workable, politically acceptable to stakeholders, and must accord with the organization's philosophy and core values. It should be ethical, moral, and legal. It must also deal with the strategic issue it was suppose to address. (Bryson, 1988, p. 60)

Choosing among a set of strategically acceptable courses of action is often extremely difficult. All strategic choices will involve organizational conflict, as each alternative will have its proponents and critics.

> Regardless of the quantifiable pros and cons of each alternative, the actual decision will probably be influenced by a number of subjective factors that are difficult to quantify. Some of these factors are management's attitude towards risk, pressures from the external environment, influences of the corporate culture, and the personal needs and desires of key managers. (Wheelen, Hunger, 1987, p. 193)

Much of General Gray's decision would logically be based on his vision of the future, input from the strategic groups, his sense or the political environment, and his years of experience. It probably would be a safe bet to assume that

all things being equal, a course of action which reinforces his warfighting philosophy would be chosen.

D. IMPLEMENTATION MODES: TEMPERING THE SWORD

Like strategic management, the aim of the service planning process is to formulate superior strategies and implement them efficiently and effectively. As previously indicated, although formulation and implementation are "intertwined as complex interactive processes in which politics, values, organizational culture, and management styles determine or constrain particular strategic decisions," for the purpose of description we have separated the service planning process into these two parts. (Quinn, et al., 1988, p. XXII) The implementation aspect of the service planning process is important to examine because once the strategy has been formulated, it is only through implementation that the desired results can actually be achieved. The implementation of strategies often posses a greater management challenge than the formulation of that strategy and the importance of implementation cannot be understated. This can best be summed up by Richard G. Hanemesh. "Just being able to conceive bold new strategies is not enough. The general manager must also be able to translate his or her strategic vision into concrete steps that 'get things done'." (Strickland, Thompson, 1984, p. 195)

Once the strategies are formulated, they must be implemented through the strategic management process. For the Marine Corps, strategy implementation can occur through what we will call the formal mode, the informal mode or the interactive mode. The formal mode is the formal systematic planning process which is organized and developed on the basis of a set of procedures. It is through the formal mode that the strategic plans, long-range plans, and short-range budgets and operating plans are linked together. However, strategic planning is not just necessarily concerned with matters which are long range. Additionally, short-term strategic matters can arise from sudden or unpredictable changes in the environment of the organization. (Radford, 1980) Furthermore, top-level management, the Commandant for the Marine Corps, may desire immediate implementation or see the need, for what ever reason, to circumvent the formal process in order to achieve the results more quickly. Just as a swordsmith would temper different metals at various rates to achieve the ideal blend of hardness and elasticity in his sword. The immediate implementation of a change would occur through the informal mode. It should be noted that although the formal and informal modes can involve conflict with each other, these modes are intertwined and should be complementary to each other. The strategic management accomplished through the formal mode guides the decisions made today, in turn the decisions made today shape the future. In "real life" most

strategies are implemented through the interactive mode--combination or coupling of the formal and informal modes.

The implementation of the Marine Corps service strategies is a complicated, iterative, and interwoven process. Many factors and characteristics of the organization, such as organizational structure, organization size, style of leadership, and the overall environment can greatly influence the implementation process, but the goal of implementation will remain the same, that is, achieving the desired results, getting it done. As indicated by the model, the product of implementation is the results or performance which must be evaluated and controlled. Obtaining the desired results, once the strategy has been formulated, will require going through the formal, informal or interactive modes. These modes will be discussed in greater detail in the following sections.

Since taking office on 1 July 1987 as the Commandant of the Marine Corps, General Gray has initiated numerous significant and far-reaching changes throughout the Marine Corps. These changes covered the entire spectrum of the Marine Corps including structure, training, facilities, doctrine and acquisition/material. Just the number, the degree of importance and the rate at which most of General Gray's initiatives were or are being implemented could be considered strategic, however, this paper will only focus on some of the changes representative of General Gray's implementation style. Additionally, to assist in the

description and subsequent analysis of the implementation of these changes, they will be discussed in the context of the model.

1. The Formal Mode

Prior to the pressures to reform the Marine Corps service planning process, which were discussed in Chapter II, the guidance and responsibilities for the formal mode of the Marine Corps service planning were published in the Marine Corps Manual (dated May 19, 1980 w/rev) and the Marine Corps Planning and Programming Manual (HQO P3121.E dated March 5, 1984). At that time, the service planning process entailed the development of the: 1) Marine Corps Long-Range Plan (MLRP), which provided broad concepts, planning objectives, and served as a basis for the evolutionary development of the Marine Corps for the period 10-20 years in the future; 2) the Marine Corps Mid-Range Objectives Plan (MMROP), which provided guidance and outlined concepts, requirements and objectives for statutory missions in support of national strategy for the next ten years; and 3) the Marine Corps Mobilization Management Plan (MPLAN), which established the policies, procedures and responsibilities for the mobilization of the Marine Corps. While the planning structure seemed plausible, it lacked substance. The MLRP was "produced by field grade officers without substantial input from CMC...consequently, although the MLRP is signed by the CMC, it is not perceived as his plan." (CNA Study, 1984, p. 7) As noted in Chapter II,

long-range planning for the Marine Corps had become a bureaucratic exercise and exerted little impact on the decision making process. It failed to provide the necessary guidance and direction for the actions being taken because it lacked the key ingredient to make it strategic--active participation of the top-level management.

Recently, under General Gray, the Marine Corps adopted a new formal service planning methodology based on a Concept-Based Requirements System (CBRS), which "includes concept development to explore, evaluate, and critique ideas; plans to guide and document the need for change; and alternate solutions to maintain combat-ready forces." (Ponnwitz, 1988, p. 1) The major service planning documents of the newly initiated CBRS encompass: 1) the Marine Corps Campaign Plan (MCCP) which outlines the Commandant's guidance; 2) the Umbrella Concept which projects the future environment, characteristics, challenges, and capabilities of the Marine Corps; 3) the Marine Corps Long-Range Plan (MLRP) which provides broad, forward-looking guidance; and 4) the Marine Air-Ground Task Force (MAGTF) Master Plan (MMP) which establishes the operational foundation for MAGTF planning. The formal mode of the implementation phase follows the structured route of the CBRS planning document cycle. It begins in the formulation phase with the publication of the MCCP followed by the Umbrella Concept, MLRP, and MMP and MMP supporting plans. At this point the formal mode of the

implementation phase begins. The MMP and supporting planning documents provide the basic input for the programmers.

Finally the program decisions and objectives are transcended into the POM cycle of the budget formulation process which attempts to arrive at the most effective and efficient allocation of resources to accomplish our national defense objectives. The POM is fiscally constrained and contains information on the Marine Corps programs planned for a six year period. It covers the objectives, planned activities, and costs of all programs. The end result is the allocation and allotment of resources. The limitations placed on the resources is the driving factor of the formal structured service planning process. For if resources were unlimited, there would be a significantly less and possibly no need for such a formal planning process. However, lifting the restrictions placed on an organization by limited resources would not alleviate the need for strategic management.

2. The Informal Mode

The initiation of the structured CBRS service planning system, as discussed in the previous section, is by no means the extent of the new directions implemented by General Gray. For any Commandant, especially General Gray with his "get it done" attitude, the formal mode is not the most desireable implementation mode. It is General Gray's style to make maximum use of the informal side of the implementation model.

> ...Gray's personal style, which has never been noted for either formality or leisurely attention to administrative detail. A retired colonel who works in Marine Corps affairs criticizes him sharply for bypassing the chain of command and normal procedures when he wants something done (which is nearly all the time). (Gold, 1989, p. 9)

Most managers would like to see their strategies implemented as quickly as possible so the benefits of the results could be realized. If it were not for the limited resources, many more initiatives would follow the informal mode in the implementation model. The best case scenario for the informal mode would allow changes to be implemented in an expedious manner with no or little requirement for resources. However, the reality is that resources are limited and many new directions and organizational changes must be phased in or implemented over a series of years, amd therefore will require implementation through a combination of the formal and informal modes. At a minimum the two modes would require interaction and adjustments. Even General Gray acknowledges "that all the goals I envisioned will not be accomplished on my watch," (Gray, January 1988, p. 175) but the planting of the strategy seed for future growth (implementation) can be strategic in itself, that is to say, the choice of the implementation mode can be critical.

In the most strict sense, the informal mode of Service Planning Process Model presented earlier entails the direct implementation of the strategy with no required formal structured planning or the reallocation of previously

designated resources from the formal process. It will be at the resource block in the model that much of the interaction between the formal and informal modes will occur. Resources would include all the assets of the Marine Corps--personnel, funding and physical assets. In "real life" the "absolute" use of the informal mode would seldom happen, for some type of resources would be required. Albeit some initiatives can be implemented or at least began with very little or insignificant amounts of resources. An example of an initiative implemented through the absolute informal mode would be the Marine Corps Professional Reading Program as published in All Marine (ALMAR) 127/89. The Professional Reading Program is part of an overall education package to develop "thinking leaders" and was institutionalize at a inconsequential amount of resources. The ALMAR requires that Marines in the rank of corporal or above read a certain number of prescribed books per year. At little or minimal cost the Professional Reading Program will instill a sense of Marine values and traits, and impart some of the Commandant's philosophy and desired organizational behavior. In the words of General Gray: "I firmly believe that professional reading is essential to the professional growth of our leaders. Marines fight better when they fight smarter. Systematic and progressive reading contributes directly to that goal." (ALMAR 127/89) The aim of the reading program according to the ALMAR is to provide a continuum of study for all Marine leaders.

Additionally, it is designed to: 1) impart a sense of Marine values and traits; 2) increase professional military knowledge; 3) improve analytical and reasoning skills; 4) increase capability for using printed media as a means of learning and communicating; 5) increase knowledge of our nation's institutions and principles upon which our government and our way of life are founded; and 6) increase knowledge of the world's governments, cultures and geography.

The publication of the Fleet Marine Force Manual 1: Warfighting would be another example of General Gray promulgating his philosophy through the informal mode. Using his best and brightest technique, this book was written by Captain John Schmitt, who had experience writing a previous manual. According to Captain Schmitt, who spent two four-hour sessions with the Commandant, "He (CMC) didn't give me specific instructions. The sources and the organization and the stumbling were my own." (Gold, 1989, p.16) The 88-page manual provides General Gray's philosophy on warfighting--the how Marines will prepare to fight and the how Marines will fight. It's a manual that "describes a style of fighting and an approach to duty and a way of life." (Gold, 1989, p. 16) The manual furthers General Gray's goal to get every Marine to "fight smarter" by becoming "better thinkers." Individual copies of the publication were mailed to each officer in the Marine Corps with the message to "read--and reread--this book, understand it, and take its message to heart." (FMFM 1:

Warfighting, 1989, p. 1) The manual promotes and more importantly declares that "maneuver warfare" is the Marine Corps' official philosophy. To ensure his warfighting philosophy was understood throughout the Marine Corps, a special team of officers traveled to various Marine Corps bases to expound on the manual. "It has also been the star attraction of a traveling road show, featuring a team from Quantico that goes to various bases, locks up enough officers to fill a messhall and gives them two hours to read the book prior to a discussion session." (Gold, 1989, p.15)

In addition to FMFM 1, each officer received a copy of the Commandant's Report to the Officers Corps. The report was intended to assist officers in understanding what the Commandant's vision of the future held for the Marine Corps. The report contained a variety of issues resolved during the General Gray's tenure or were being in the process of being staffed for resolution in the future. The report listed the issues in three general categories: 1) How the Marine Corps will train and fight; 2) the Marine Corps' role in supporting national security; and 3) How the Marines view themselves.

The above-mentioned cases of initiatives implemented, in essence, through the informal mode are certainly not all General Gray's initiatives, but are reflective of how he is attempting to institutionalize an attitude, and a way of life and thought process for the Marine Corps.

3. The Interactive Mode

Unfortunately the implementation of most service strategies cannot be immediately emplaced. Therefore, many of the strategies will be implemented through the interactive mode. In addition to the resource limitations, it can be a slow and suffering process for organizations to learn new ideas and make appropriate changes because of the many interacting factors affecting an organization's capability to implement new strategies. An innovated and aggressive leader craving to implement his strategies quickly is in conflict with the slow bureaucratic machine. The various barriers and factors resisting change, coupled with the real life constraints imposed by limited resources, will require many strategies to be implemented through a combination of the formal and informal mode. Additionally, the forces of the machine bureaucracy will be pushing the initiatives of the informal mode back into the formal mode at the earliest possible time, while the aggressive leader will be exerting his efforts to stay in the informal mode and only enter the formal mode when required, preferably at the "result" end of the model. For General Gray, his "get it done" attitude and trait to "make things happen" is prevalent throughout the spectrum of implementation. This is not to say the aggressive leader neglects or does not realize the importance of a formal structured planning process.

To instill the warrior philosophy in the Marine Corps and achieve his goal to "ensure every Marine is a warrior first" (Jordan, 1988, p. 28), in addition to develop "thinking leaders," General Gray has brought about many significant changes through the interactive mode. This does not mean that all these changes were excessively delayed due to the interactions of the modes but it required tradeoffs, adjustments and complimentary actions between the modes to accomplish the objectives. In actuality, many of the changes were enacted extremely quickly. After all, one cannot not forget General Gray's leadership style. "He doesn't micro-manage. He finds people who are savvy, gives them direction and turns them loose. And implicit in the quotation's tone is the Gray philosophy--get it done. He often adds, 'Or I will find someone who will'." (Jones, 1989, p. 16)

An example reflective of the Commandant's style was his reshaping of the Marine Corps training and education programs. It began with the reorganization of the Marine Corps Development and Education Command (MCDEC) located in Quantico, Virginia. Although a major undertaking, on the 212th birthday of the Marine Corps--November 10, 1987, less than five months after assuming office, General Gray approved the reorganization of MCDEC and established the Marine Corps Combat Development Command (MCCDC), "a name more accurately reflecting its new roles." (Gray, 1987, p. 7) At the heart of the reorganization were the five centers within MCCDC.

These included the Warfighting Center, the Training and Education Center, the Intelligence Center, Wargaming and Assessment Center, and the Information Technology Center. Many more changes falling under the purview of these Centers were to follow, but we will concentrate on the Training and Education Center.

After the reorganization was completed the Commandant wanted to maintain the momentum for institutionalizing his training and education initiatives. In a letter to the Commanding General of MCCDC, General Gray provided further guidance.

> The full establishment of Quantico of an Marine Air-Ground Training and Education Center last fall marked the completion of the Center's reorganization and relocation efforts....We are off and running--you and the members of your command have made significant progress and--we have momentum! Now let's make it happen and institutionalize as we implement! (CMC Letter, July 1, 1989)

The five page letter provided his intent and conceptualized his vision of Marine Corps training and education process of the future. Additionally he provided areas to be examined/ validated and provided philosophical direction for Marine Corps schools. The letter ended with "Don't staff or examine these issues to death; let's get on with it--you have the Charter....Use the philosophy expressed in FMFM 1: Warfighting!" (CMC Letter, July 1, 1989)

On the education side of the house, a comprehensive new program of continuing Professional Military Education (PME) is being institutionalized. In "order to successfully

implement and manage the new PME program" (ALMAR 128/89), General Gray activated, within the Training and Education Center of MCCDC, a Marine Corps University and assigned a General Officer as its president.

On the training side of the house, the Commandant is committed to reshaping how the Marine Corps trains for war. In terms of commitment, "warrior training is riding high on commitment." (Jones, 1988, p. 16) General Gray "believes in the importance of warrior training and that it's time to get back to the basics." (Bout, 1988, p. 42) The Marine Corps warrior training concept effects all Marines and is wide-ranging. It begins with the Marine Battle Skills Training (MBST) Program and extends through the structure of the Marine Corps. In General Gray's report to the officer corps he said, "MBST is a vital warfighting initiative, an investment in the individual Marine and the single most important training program in the Marine Corps today." (CMC Letter, July 1, 1989) The MBST consists of the: 1) Basic Warrior Training (BWT) conducted at the recruit depots; 2) Marine Combat Training (MCT), a 28-day training package at the Schools of Infantry; 3) Marines Leaders Training (MLT) which encompass the NCO schools and staff NCO academies; and 4) Unit Sustainment Training (UST). Additionally, new enhanced infantry training, marksmanship, close combat, physical fitness and water survival training is being

institutionalized. The implementation of these programs are not without costs both in manpower and funds.

> One of Gray's chores will be sustaining that momentum, particularly in the near future when commitment to demanding technical skills butts head-on into the equally time-consuming dedication to warriorism. There may not be enough hours in the day to keep both on front burners....Already, however, questions have surfaced. Some are asking, "Can the Marine Corps afford it?"--it being the cost in terms of people, money and commitment....Of all commands the MCRDs are the furthest along in Basic Warrior Training. Gray gave them a short fuse, which has exploded into reality. Boot camps had to incorporate about 60 hours of BWT into training cycles that were not increased beyond the normal 57 days. The impact was another 5 1/2 days of instruction jammed into the same schedule. "We were finishing lesson plans the day before the first platoons were to do it (in January). And our support people worked around the clock to put the extra facilities in."....He needs more manpower, but isn't likely to get it. It's going to take 70 additional Marines to expand the School of Infantry alone, for example....Gray needs more training dollars, but it's doubtful he'll get them. At Lejeune's Infantry School, for instance, they say they need another $2 million worth of ammunition...."Where is the land for expanding field training?....Where are we going to get the money?" (Jones, July 4, 1988, p. 16)

> The difficult part of these initiatives is encountered in the details of execution. Trainers must be trained, faculty developed, facilities (publications, training simulators, ranges, etc.) must be provided and the flow of students/ trainees through the system must be managed. All of this takes time and money, both of which are in short supply in the current environment. (Grace, 1989, p. 37)

E. SUMMARY

In this chapter we set the stage for the Marine Corps as the Commandant assumed office and attempted to provide some insight into views of the Marine Corps' posture at that time. A model for the Marine Corps service planning process was developed to explain the formal and informal processes which shape the actions, thinking and planning efforts of Marines.

The service planning process was described in the context of the two interactive and interwoven phases--formulation and implementation. Several initiatives, reflective of General Gray's leadership style and interactions of the service planning process were discussed. In the next chapter, we will review the barriers to strategic management and develop criteria to evaluate the service planning process for the subsequent analysis.

IV. ANALYSIS OF THE MARINE CORPS SERVICE PLANNING PROCESS

A. INTRODUCTION

Evaluating or analyzing an organization's planning process is an extremely complex undertaking. There are no accurate gauges, precise correct answers, or infallible rules. Additionally, what may seem or even prove to be a good formula for success for one organization at a certain time and place, may not hold true for another organization or for the same organization at a different time and place. What works for one organization may not prove to be a formidable concept or implementable idea at another organization. Like the elements that determine the weather (temperature, humidity, etc.), numerous interacting factors (personalities, management styles, organizational culture, etc.) affect the make-up of an organization. And like the weather, where some like it cold and others hot, the significance of each factor is different for each organization. Each organization is a melting pot filled with various personalities, cultures, and environments, thereby making each organization and each situation for that organization unique.

Despite these perplexities in analyzing effective strategies, management styles, and planning systems, we can develop guidelines and minimum critical criteria for effective strategies to help us in our analysis of these processes.

This chapter will establish criteria and guidelines for analyzing the service planning process and then use those criteria to analyze the Marine Corps service planning process. We will begin this chapter by discussing the barriers of effective strategic management, which will provide the foundation for our criteria development and subsequent analysis of the Marine Corps service planning process.

B. BARRIERS TO EFFECTIVE STRATEGY

The road to building and maintaining a capable organization and focusing resources and energies on strategic accomplishment is filled with many impediments, obstructions and barriers. These obstacles to strategic management originate from both the external environment, as well as the organization itself. The major external barriers to effective strategic management, as identified by Peter Lorange in Implementation of Strategic Planning, include: 1) scarcity of resources; 2) politics; 3) social values and attitudes; 4) power shifts; and 5) technology. While not an exhaustive list, these five factors assuredly represent significant issues of concern for effective strategic management. The hurdles imposed by the external environment are compounded by the internal barriers created by the organization itself. While it may seem that the internal obstacles should be the easiest to breech, they actually represent some of the greatest challenges and implementation difficulties for

management. This thought was echoed by Lorange when he said, "Emerging internal constraints and handicaps created by the organization itself may increasingly become barriers to effective strategic management. It is indeed puzzling that self-inflicted handicaps are frequently so dominate." (Lorange, 1982, p. 220) Lorange went on further to identify the internal barriers as: 1) inflexibility; 2) executive obsolescence; 3) parochialism; 4) values, styles, and traditions; and 5) power. These barriers can be capsulized into four strategic management challenges put forth by John Bryson in Strategic Planning for Public and Non-profit Organizations. The four challenges consist of the human problem, the process problem, the structure problem, and the institutional problem. A brief overview of these four challenges that make up the internal barriers will be provided later in this section.

Both the external and internal barriers must be confronted if the strategic management process is to assist in bringing about changes in an organization. However, this section will focus on the internal barriers and challenges, because the external barriers, for the most part can be directly correlated to the external factors (Congress, Executive Branch, DoD, JCS, PPBS, etc.) influencing the service planning process, which were discussed in earlier chapters. Additionally, as noted above, it is the internal barriers which pose the greatest management challenges. The four

challenges to the strategic planning process expounded by Bryson inundate the path to effective strategic management so each challenge will be briefly addressed below.

The human problem includes the management of attention and commitment of individuals, groups, and the organization as a whole. While people are adaptive and may not recognize gradual change, they also, generally speaking, are by nature, creatures of habit and "change resistors." The reluctance by people for change must be overcome. Stoner recognized this when he said, "A major obstacle to the implementation of new policies, goals, and methods of operation is the resistance of organization members to change." (Stoner, Wankel, 1986, p. 358) Also, the overall organizational culture (the shared understanding of norms, values, attitudes, and beliefs of an organization) and effects of bureaucracies can impede strategic change. Large organizations, such as the Marine Corps, tend to be very structured and bureaucratic. Although the Marine Corps may not be the archetypical machine bureaucracy, as identified by Mintzberg in The Strategy Process: Concepts, Contexts, and Cases, it certainly has many of the characteristics of the machine bureaucracy and for many reasons runs like a machine bureaucracy. And "as long as its environment remains perfectly stable, the machine bureaucracy faces no great difficulty of adaptation." (Mintzberg, 1988, p. 556) But, a stable environment has certainly not been the case for the Marine Corps.

The second challenge of strategic management is the process problem which entails the selling of "new ideas to enough people that unconventional wisdom is turned into conventional wisdom." (Bryson, 1989, p. 208) Effective strategic management requires that organizations be good at generating, as well as implementing ideas. The characteristics, structure, values, and processes of an organization can be enhancers or inhibitors in the development and exploitation of new ideas. For the Marine Corps, the Commandant plays a key role in establishing the make-up (characteristics, structure, values, and processes) of the organization. At the same time, it is the overall make-up of the organization that provides the arena for the maneuver of the top-level management and will greatly determine his strategy making mode. Of the three strategy making modes--entrepreneurial, adaptive, and planning, as proposed by Mintzberg, a large organization would tend to migrate towards the slower reacting adaptive or planning mode. However, the traditionally obedient, motivated, and well-disciplined Marine Corps can offer the Commandant more opportunities, than other large organizations, to operate in the more responsive and action oriented entrepreneurial mode.

The third challenge of strategic management is the structural problem, which encompasses the advantageous linkages of internal and external environments across levels. In other words, making the organization think and act as

"one," and dealing with the "collective, rather than the individual, nature of strategic planning." (Bryson, 1989, p. 211) While the Marine Corps is more homogeneous than the other services, such as the Navy, who perhaps has more divisive competition then the Corps, due the nature of their specialty branches--surface, aviation, and submarine specialties and the "barons" of those branches, nonetheless, the facilitation of the "achievement of the collective success" (Bryson, 1989, p. 213) is just as critical for the Marine Corps as any other organization.

The final and most difficult challenge according to Bryson is the institutional problem, which involves the transformation of institutions. "What we call institutions are in essence highly stable patterns of interactions...organized around important ideas." (Bryson, 1989, p. 214) These patterns of interactions become institutions when they become ingrained in the character of the organization. The institutionalizing of ideas is the responsibility of the leadership.

The four major categories of problems described above are encountered throughout the strategic management process and must be persistently addressed to obtain effective strategic management. Albeit they only encompass the internal barriers, these categories pose special areas of concern for management which must be heavily considered. This is summed up by Stoner's comment, "Strategy should, ideally, prevent such

handicaps and free the organization from internal constraints, at the very least, it must learn to cope with them." (Stoner, 1989, p. 249) In the next section, the four challenges to effective strategic management will be used as a platform for the development of the analysis criteria.

C. ANALYSIS CRITERIA

As previously indicated, there are no precision-calibrated yardsticks for the mensuration of strategies. Yet, based on historical examples and analyzes, there are certain critical factors and structural elements which are needed for effective strategies. In the book, The Strategy Process: Concepts, Contexts, and Cases, James Quinn lists seven critical items required for effective strategy. These include: 1) clear, decisive objectives; 2) maintaining the initiative; 3) concentration; 4) flexibility; 5) coordinated and committed leadership; 6) surprise; and 7) security. Additionally, Tom Peters, in his book Thriving on Chaos, proposed criteria for a good strategic planning process. Specifically he says:

> A good strategic planning process (1) gets everyone involved, (2) is not constrained by overall corporate "assumptions" (e.g., about the general economics picture), (3) is perpetually fresh, forcing the asking of new questions, (4) is not to be left to the planners, and (5) requires lots of noodling time and vigorous debate. (Peters, 1987, pp. 615-616)

In an effort to focus our analysis and clearly define what we are reviewing in order to determine if the Marine Corps service planning process is strategic, we will use the

questions listed below. The questions were aggregated from the critical elements of strategy offered by James Quinn and Tom Peter's criteria for a good strategic planning process, using the four challenges of strategic management as the foundation for the conjointment.

- Human Problem: Does the service planning process enhance commitment and overall involvement, obtain the attention of key people to focus on key issues at key places in the process, and provide the requisite motivational impact necessary for change?

- Process Problem: Does the service planning process maintain the initiative and be flexible and adaptable enough to allow for new questions, innovated ideas, and vigorous debate?

- Structural Problem: Are all efforts directed towards clearly understood, decisive and attainable overall goals, and do the goals provide internal consistency, compatibility with the environment, and appropriateness in light of resources which will allow the organization to act as a cohesive and coordinated unit?

- Institutional Problem: Does the service planning process provide for responsible and committed leadership who furnish the "front-end" focus for the process to institutionalize change?

While there may be an innumerable amount of questions one could amass to analyze the Marine Corps service planning process, the questions listed above will give us the ability to focalize our analysis, yet provide us enough favor of the process to make a judgment on its effectiveness.

D. ANALYSIS OF THE MARINE CORPS SERVICE PLANNING PROCESS

We will now turn our efforts to analyzing and evaluating the Marine Corps service planning process by using the criteria contained in the questions previously developed.

Although the questions are overlapping and not completely divorceable from one another, for the purpose of analysis, we will view the strategic management of the Marine Corps from the context of each question individually. After which, we will conclude this section by taking a quick look at a few of the impacts and outcomes of some of the changes recently institutionalized by the Marine Corps, and what effects they have had on how the Marine Corps sees itself and how the external environment (Congress and the general public) view the Marine Corps.

In terms of the human problem and its corresponding criteria question, three words stand out--commitment, involvement, and motivation. The Marine Corps has always been a highly motivated and committed organization, so ideally the service planning process would cultivate and provide the steering mechanism of these attributes. One of the ways to improve the motivation and commitment, in addition to steering the overall efforts of an organization, is to involve people in your ideas. This also capitalizes on all the talents of the people in the organization. Additionally, commitment and motivation are more apt to flourish when immersed in involvement. Peters believes that a organization should "involve all personnel at all levels in all functions in virtually everything...." (Peters, 1987, p. 342)

From the description of the service planning process in Chapter III, it is clear that General Gray has aggressively

sought to involve all Marines--active, reserve and retired, at all levels, as well as friends of Marines. To foster all this involvement, the Commandant created an environment where listening is endeared. General Gray not only pays close attention to his staff and field commanders, but listens to all ideas from wherever the source.

The degree of involvement by all concerned has increased ten-fold, from the private, who suggests an innovated idea, such as the idea to use thermal protective blankets to reduce heat signatures, to the general who attends the general officers symposium. Overall involvement in the service planning process is also highly visible across all the implementation modes--formal, interactive, and informal. The structured formal planning process of the CBRS, not only provides the active participation of the top-level management, but infuses the active participation of all the key players at the appropriate level in the development of planning documents from the MCCP to the MLRP and MMP. Evidence of involvement is also absolute in both the interactive and informal modes, for General Gray could not have institutionalized so many significant changes without the active involvement, motivation, and commitment of the majority of the elements (Marines and their friends) of the Marine Corps. The Marine Corps service planning process under General Gray scores high in reducing the challenge of the human problem of strategic management. However, the human challenge is always

reverberating and in the years ahead will continually resurface, especially with the current tempo of change and the almost certain continual dwindling of resources. Sustaining the present momentum will be extremely difficult.

The next challenge facing strategic management is the process problem. The service planning process should maintain the initiative and have the flexibility to encourage, recognize, and adapt to new opportunities and ideas. General Gray ensures that the Marine Corps service planning process maintains the initiative and his "get it done" attitude is prevalent throughout the entire process. Peters makes the statement, "Since our foremost need is to change more, faster, we must induce a sense of urgency and hustle throughout the organization." (Peters, 1987, p. 586) It is undeniable that the Commandant has instilled a sense of urgency throughout the Marine Corps. His dynamic, aggressive, and no-nonsense leadership style demands it. During his first six months in office, he has turned ideas, that have been debated for years, into reality.

The verve for the service planning process to sustain the initiative comes from the assertiveness of the Commandant and the flexibility he provides in the process by empowering people. The empowerment of people includes getting people involved and his leadership style of "mission type orders--put someone in charge--get it done." This is then reinforced by reducing the inhibitors of action such as excessive layers of

management and the bureaucratic bog. The flexibility the Commandant gives the service planning process helps the Marine Corps to respond to situations more rapidly and to make adjustments to the continuing process of change.

This flexibility also enhances innovation. Innovation can thrive more when organizations are flexible and adaptable. But the Commandant does not just leave innovation up to the flexibility of the service planning process alone. He places much importance on innovation, and actively pursues and is in constant search of new ideas and suggestions from all corners of the Marine Corps. In General Gray's words, "Innovated thought will stand above normal bureaucratic lobbies that often interfere with clear vision." (Gray, 1988, p. 27) He desires a "thinking" Marine Corps and encourages questions and vigorous debate of the issues. The emphasis on innovation, combined with a flexible and aggressive service planning process, which can implement ideas and react relatively quickly, has served well in negating the opposing effects of the process problem of strategic management.

Although the advantages of an aggressive, flexible, and innovated service planning process can certainly outweigh the disadvantages, and so far it has for the Marine Corps, one must also consider the future potential problems. For instance, while flexibility and the move from specialization is desireable, it also breeds inefficiencies, thereby diminishing the main benefit of a bureaucracy, that of

efficiency. Additionally, a highly aggressive and innovated service planning process is not without its limitations and risks. Innovation must be supported by resources--time and funds. The high pay-offs of boldness and the Commandant's desire to remain in the informal implementation mode are layered with inherent risks and these risks can be compounded by a "get it done" attitude unless tempered with judgment and leadership.

The third challenge to strategic management is a structural problem and deals with the goals of the organization and their effect on the organization to act as a cohesive unit. After the Beirut bombing, spy scandals, and Oliver North's involvement in the Iranian Arms fiasco, many were of the opinion that the Marine Corps needed a "shaking-up." Upon confirmation as CMC, General Gray moved out smartly to bring all the elements of the Marine Corps, from recruits to retired, from private to general, back into a more cohesive unit and focus the total efforts and resources of the Marine Corps on the common goal of readiness and warfighting. The Commandant has devoted a great amount of time and effort to ensure all Marines understand his goals and "vision" for the Marine Corps. While his goals expect a great deal from the Marine Corps and not all his goals will be accomplished on his watch, they are attainable and within the "sight-picture" of the Marine Corps.

To bring the Marine Corps in step, the Commandant created an overall "sense of mission" for the Marine Corps through his maneuver warfare and "back to the basics" philosophy. This facilitated the many parts of the Marine Corps to pull together as a "whole" instead of many little tugs from the parts. The part-whole relations of an organization is summed up in Bryson's statement,

> The management of part whole relations can be made much easier if the organization has a widely agreed-upon mission, even easier if it has a widely agreed-upon vision of success. Agreement on mission and vision will embed the whole into the parts, maker the management of transition easier, assure that a concern for the whole will limit macro-nonsense, and will facilitate the achievement of the collective success that effective strategic planning always is. (Bryson, 1989, p. 213)

The "sense of mission" provided by the Commandant allowed the Marine Corps to move forth as a more cohesive unit because it reduced parochialism, careerism, and the "apparent trend toward specialization and away from the generalists ideal of every Marine a rifleman." (Grace, 1989, p. 30) It also bonded more closely the vertical and horizontal divisions within the Marine Corps. And communication and coordination were improved across the "functional kingdoms." (Lorange, 1982, p. 221)

The Commandant has constructed a compelling "vision of success" for the Marine Corps. His vision has been clear, succinct, and well publicized, but more importantly it has inspired the Marine Corps and widely shared by its members. Many benefits have flowed from this, including a more cohesive

organization that is in step and focuses on the "whole" picture, a more committed, motivated, and involved organization, and an induced "energy" about the system. This can be seen from the Marine Corps general acceptance of the Commandant's drive to stay in the informal mode of implementation and a weaken of the bureaucratic machine to pull it back into the formal mode, although the level of resources may be the deciding factor in the end.

Finally, the fourth challenge of strategic management which involves the institutional problem. This is a problem of institutionalizing change. The book, Thriving on Chaos, is devoted to change and Peters specially states, "To meet the demands of the fast-changing competitive scene, we must simply learn to love change as much as we have hated it." (Peters, 1987, p. 56) While not nearly to the degree or severity attained during war, the every-day environment of the Marine Corps is subjected to chaos, uncertainty, fluidity, and lack of information. If the military trains for this type of environment--war filled with chaos, uncertainty, and constant change, one might expect that the military would be more at ease with change. However, this does not seem to be the case. In the introduction to Lind's book, Maneuver Warfare Handbook, Colonel Studt, USMC (Ret) states,

> ...the entire movement for military reform is driven largely by civilian intellectuals, not military officers....When you think about it, this is not surprising. We have never institutionalized a system that encourages innovative ideas or criticism from subordinates. Proposing significant

> change is frequently viewed as criticism of superiors, since they are responsible for the way things are, and borders on disloyalty if not insubordination. (Lind, 1985, pp. XI-XII)

To bring about reform, General Gray has sought to institutionalize a system that encourages innovation and accepts subordinate critique. Former Secretary of the Navy, Webb, has said, "Al Gray is taking a leap that almost no other officer inside the Pentagon has the guts to take. He's trying to get his people to think differently." (Gold, 1989, p. 11).

General Gray's endeavor to institutionalize his changes are ingrained in his warfighting philosophy of maneuver warfare. A philosophy that encourages innovation, trust, decentralization, and the focus of overall effort. With the publication of FMFM 1, maneuver warfare was officially adopted as Marine Corps doctrine. It described a way of thinking and a philosophy of leadership. The philosophy behind maneuver warfare is not intended only for the battlefield but is an attitude and a way of life to be engrossed in all Marine Corps actions and undertakings, in war and peace.

Thus far, we have analyzed the Marine Corps service planning process using the criteria developed earlier. But an analysis would not be complete without an evaluation of the most important part and the purpose of the rest of the strategy making model--the results and performance. In other words, how has the service planning process affected the Marine Corps? Unlike most businesses, the Marine Corps cannot be evaluated on the amount of its profits or the number of

wiggets produced. The evaluation is much more subjective and judgmental. The Marine Corps is in the business of warfighting--preparing for and, when necessary, conducting war. To accomplish this, the Marine Corps must accomplish three things. First and foremost, is to train and prepare for war. Second, it must "sell" itself to the people and Congress of the Country who provide the resources (manpower and funding) and essence for existence. And thirdly, it must "sell" itself to "itself."

In terms of preparing for war, the Marine Corps has made giant strides. The thrust of all the Commandant's initiatives have been directed towards the betterment of the Marine Corps preparation for war. Much of his focus and some of his highest priorities have been oriented on training and education. He has undertaking an unprecedented effort to ensure all Marines are prepared for war by "training the way we will fight." (Gray, 1988, p. 26) And it is paying off, from the recruit who receives the new Basic Warrior Training at Boot Camp to the General who participates in General Gray's wargaming exercises. In appearing before Congress to deliver the Annual Report on the Marine Corps, General Gray said,

> Our leaders will be trained to be self-reliant and capable of independent decisions on the battlefield. Our overall training will stress physical and mental toughness. Wherever you see a Marine, there is one thing which you can be certain; he'll be ready to fight, right there and then if necessary. (Gray, 1988, p. 26)

But has the Marine Corps really succeeded in achieving their goal in preparing for war? Although there is always room for improvement and the Corps will continue to strive for improvement--Al Gray will see to that--it is generally accepted that, by nearly all standards, today's Marine Corps is the best in peace time history. "Today's Marine Corps, most observers agree, is the best in peacetime history." (Gold, 1989, p. 8) "A final and clear conclusion from the events of 1988 is that the Marine Corps will continue to represent a unique and irreplaceable force in U.S. national security cababilities."[2] (Scharfen, 1989, p. 170) Overall, the service planning process under General Gray has seemed to have a positive effect on the warfighting preparations of the Marine Corps.

As an off-shoot in the Marine Corps advances in its goal to prepare "warriors" for war, the image of the Crops has improved remarkably with both the Congress and the general public. Prior to General Gray, the public and Congressional opinion of the Marine Corps was low, as echoed in the statements provided in the beginning of Chapter III. This "downer" attitude held by the public and Congress has been turned around by General Gray and now the Marine Corps is viewed in an extremely positive light. The favorable

[2]Statement by Senator S. Nunn.

impressions are evident by the remarks of many of the Congressman, such as those provided below:

> I like what I see in the Corps under General Gray. It seems to us on the Hill that he has focused on the right priorities.[3] (Scharfen, 1989, p. 168)

> "He's extremely effective up here. He has surrounded himself with people knowledgeable in Washington ways, in particular people who know their way around Congress....I think he (Gray) will be having a lot of difficultly getting either additional manpower or money," Sen. John McCann, R-Ariz. said of future budget requests from Congress. "But if there is one service that will get more, it will be the Marine Corps," he added, in reference to Congress' approval of the way Gray is shaping the Corps. (Jones, 1988, p. 16)

The support of Congress has also been reflected in their actions. Although the reinstatement of the V-22 Osprey back into the budget is entangled in politics, it can also be construed as Congress' support and approval in the direction the Marine Corps is moving. Another example is the 1988 vote by Congress for a unique multiyear procurement of the Marine's AV-8B Harrier V/STOL attack aircraft. In the opinion of one Pentagon official, "The Marines are well down the list of the Navy aviation priorities. But Congress fortunately had the foresight to stick the aircraft back in the budget. The AV-8B is a Congressional aircraft." (Scharfen, 1989, p. 167) The overall view of the Marine Corps, held by Congress, which is reflective of the American people, is generally positive. This positive attitude will render the Marine Corps many benefits in the future, especially in the lean years ahead.

---

[3]Statement by Representative Ben Blay.

Finally the Marine Corps must be concerned with its self-image. How the elements of an organization view themselves is important to the overall health of that organization. The Marine Corps has always been an organization filled with pride. Lately the pride has seemed to have been elevated. This is evidenced throughout the Marine Corps by comments such as:

> "The troops are eager for [Gray's Message]....They believe in being warriors and they want to get back to the basics."[4] (Jones, 1988, p. 16)

> Today, two years after Webb's decision and midway through Gray's tenure as Commandant, the Corps manifests a peacetime intensity unknown since the pre-World War II era. The enthusiasm is ubiquitous. "I'm having fun," says Brig. Gen. William P. Eshelman, commanding the 5th Marine Expeditionary Brigade at Camp Pendleton, Calif. Says Lt. Col. Bob Cohen, a battalion commander at Twentynine Palms, Calif., "Everybody has their hot buttons. The Marine Corps is mine." Pvt Voiselle Higgins Jr., a few weeks out of boot camp, agrees. I wanted to serve with the best. I am." (Gold, 1989, p. 9)

E. SUMMARY

In this chapter we discussed the barriers to strategic management and the service planning process, developed analytical criteria, and finally analyzed and evaluated the Marine Corps process. From our analysis of the Marine Corps service planning process we have determined that the process meets the criteria for being strategic and effectively addresses each of the four challenges of strategic management. An analysis of the criteria and challenges of strategic

---

[4]Statement by Sgt Maj Peter Jenison.

management provides us an indication of how the system is doing and its susceptibility to failure. The indications for the Marine Corps point in a favorable direction, towards a more strategic and effective process.

V. CONCLUSIONS AND SUGGESTIONS FOR FURTHER STUDY

A. CONCLUSIONS

The purpose of our study was to examine, describe, and analyze the Marine Corps Service Planning Process, determine the extent that it is strategic and effective. From our review of the service planning process and subsequent analysis and evaluation, we believe it to be both very strategic and extremely effective.

The "downers" caused by the Beirut Bombing, Moscow Security Guard Spy Scandal and the Oliver North arms deal fiasco created an opportunity for change. The appointment of General Gray and his emphasis on warfighting sparked and energized the organization to change. His "back to the basics" appeal in implementing a "maneuver warfare" doctrine won the support and acceptance from not only all elements of the Marine Corps, but the Congress and the general public as well. The Commandant provided the sense of mission for the Marine Corps to move forward as a committed, integrated and cohesive unit. The end result is a Marine Corps better prepared for war and an organization with an improved image and restored reputation.

The process is an effective hybrid of entrepreneurial innovation, vitality, and bureaucratic efficiency and thoroughness. The Commandant has effectively provided

guidance and strategic direction and devoted the time and energy to ensure everyone understood his vision. He has actively sought involvement and ideas from his organization from both inside and outside the normal bureaucratic channels. These ideas were validated with the system and then expeditiously put into practice using a formal, informal or interactive approach as necessary. This blend of guidance and direction from the top, mixed with new and innovative ideas from the bottom has created a very coherent, integrated organization that is also flexible and adaptive to the chaotic environment in which it operates.

The Commandant is institutionalizing his warfighting philosophy of "maneuver warfare." A maneuver warfare philosophy in preparing combat forces can make for a more effective organization. A well-disseminated and publicized commander's intent (a vision), mission type orders, decentralized control, opportunistic seizure of innovative ideas, coupled with the swift, practical application of them are the keys to his vision of success not only on the battlefield, but in the organizational swordsmithing process as well.

Overall, we have given high marks to General Gray and the Marine Corps service planning process, but there are other very important considerations that must be mentioned. First and foremost, we must consider the Marine Corps organization itself. The Marine Corps is a unique organization that has

distinguished itself, in war and peace, throughout its history. The Marine Corps commitment, motivation, and esprit de corps has always been unsurpassed, even during the dark times. Although General Gray has been inspiring, it is doubtful that he could have accomplished so much with any other public organization equivalent in size. The second consideration is the point-in-time in which we are analyzing and evaluating the Marine Corps service planning process. The Marine Corps is only mid-way through the Commandant's tenure. At the start of his term, the Marine Corps came "out of the blocks" at a sprinter's pace and has kept that pace ever since, but the Marine Corps is not running a short race. It is an endurance race with many sharp turns and bends ahead. Within this context, are we making judgments at the beginning of a marathon? Can the momentum be sustained? Is the Marine Corps running so fast it won't be able to negotiate all the bends in the narrow road ahead? Thirdly, success today does not guarantee success tomorrow. Just meeting our criteria for being strategic does not guarantee success and there is "nothing inherent in a strategic planning system that guarantees that the 'right' strategy will be chosen." (Lorange, 1982, p. 37) And finally, General Gray and the service planning process we are evaluating, are the benefactors of the "greatest modernization of the Marine Corps that we ever experienced" (Scharfen, 1988, p. 162) which was orchestrated by former Commandant, General P.X. Kelly.

In summary, while we view the Marine Corps service planning process very strategic and extremely effective, the successes of today are not guaranteed to be carried over into the future. The Marine Corps will face many new challenges in the future--both internal and external--and these will be compounded by the persistent and recurring nature of the problems and challenges of strategic management. However, we fully anticipate history will look back favorably upon General Gray and support the idea that he was the "right man at the right time."

B. SUGGESTIONS FOR FURTHER STUDY

- The exploration of new organizational techniques that can bring critical issues and innovative ideas quickly into the strategic management process.
- The study of structural factors necessary to move the Marine Corps to the maneuver warfare philosophy and doctrine, and an analysis of the barriers that make such movement difficult.
- The study of the impact of forcasted budget reductions on the change initiatives that have been and are being institutionalized.

LIST OF REFERENCES

ACMC letter 5050 ACMC:67, "CMC Decisions on Artillery Conference Recommendations," September 7, 1989.

Acquisition Strategy Guide (ASG), 1st ed., Defense Systems Management College, Fort Belvoir, Virginia, July 1984.

AFSC Pub. 1, The Joint Staff Officer's Guide, Armed Forces Staff College (AFRC) Norfolk, Virginia, 1988.

ALMAR 127/89, CMC Washington D.C. message R 111500Z July 1989, Unclassified, "Marine Corps Professional Reading Program."

ALMAR 128/89, CMC Washington D.C. message R 131952Z July 1989, Unclassified, MCBul 5400, "Activation of the Marine Corps University (MCU)."

Barnes H.K., LtCol., USMC, MCCDC, Quantico, Virginia, interview with authors on June 27, 1989.

Bout, V.V., "Warriors on the Horizon," Leatherneck, V. LXXI, October 1988.

Bryson, J.M., Strategy Planning for Public and Nonprofit Organizations, Jossey-Bass, 1988.

Builder, C.H., The Army in the Strategic Planning Process: Who Shall Bell the Cat?, Rand Corporation Report (R-3513-A), April 1987.

Burgelman, R.A. and Maidique, M.A. Science Management of Technology and Innovation, Irwin Inc, Homewood, Illinois, 1988.

Center for Naval Analysis (CNA) Research Memorandum (CRM 85-98), "Long-Range Planning: A Review of Theory and Practice for the United States Marine Corps," Alexandria, Virginia, 1984.

Clausewitz, Karl von, On War, Pelican Books, 1968.

Cleland, I.D., and King, W.R., Strategic Planning and Policy, Litton Education and Publishing Inc., 1978.

CMC Letter, "The Commandant's Report to the Officer Corps," May 1, 1989.

CMC Letter 1500/CMC, "Training and Education," July 1, 1989.

Converse, G.S., LtCol., USMC, HQMC, Washington, D.C., interview with authors on October 25, 1989.

Draft Planners Reference Manual, USMC, Advanced Amphibious Study Group, HQMC, August 1983.

Farrell, G.M., The Structure of Linkages Among Tecnology, Planning, and Future Naval Missions, NPS, Monterey, California, 1981.

Fleet Marine Forces Manual--1 (FMFM-1); Warfighting, USMC, MAGTF Warfighting Center, MCCDC, 1989.

Fraser, R., "Gray Revitalizing Corps with Extra Dose of Pride," Navy Times, V. 37, July 4, 1988.

Gardner, S.R., Rachlin, R., and Sweeny, Handbook of Strategic Planning, John Wiley and Sons, 1978.

Gold, P., "Times a-Changing' for the Proud Few," Insight, V. 5, September 25, 1989.

Gold, P., "Chess Pieces in Place," Insight, V. 5, September 25, 1989.

Gold, P., "A Thinking Man's Corps," Insight, V. 5, September 25, 1989.

Grace, J.J., "A Quiet Revolution Within the Corps," Amphibious Warfare Review, V. 7, Summer 1989.

Gray, A.M., "General Gray Discusses Corps' Future," Interview with Seapower magazine published in Marines, V. 18, January 1988.

Gray, A.M., "Annual Report of the Marine Corps to Congress," Marine Corps Gazette, V. 72, April 1988.

Gray, A.M., "A Conceptual Framework for the Future," Marine Corps Gazette, V. 72, May 1988.

Gray, A.M., "Equipping Marines for Combat in the Next Century," Marine Corps Gazette, V. 72, June 1988.

Gray, A.M., "Small Service, Many Missions," Defense Magazine, January/February 1989.

HASC # 99-53, Reorganization of the Department of Defense Hearings before the Investigations Subcommittee of the Committee on Armed Services, House of Representatives, House Armed Services Committee (HASC), 99th Congress, 1987.

Headquarters Marine Corps Organization Manual, USMC, MCO P5400.45, 1989.

Helmly, J.R., "Strengths and Weaknesses in our Defense Planning" LD-74023A, Student Report, Air University, Maxwell AFB Alabama, 1988.

Heymann, P.B., The Politics of Public Management, Yale University Press, 1987.

Hofer, C.W. and Schendel, D., Strategy Formulation: Analytical Concepts, West Publishing Company, 1978.

JCS Pub. 1-02, Department of Defense Dictionary of Military and Associated Terms, U.S. Department of Defense, Joint Chiefs of Staff (JCS), Washington, D.C., June 1987.

Jones, M., "Some HQMC Functions Heading to Quantico," Navy Times, V. 36, November 30, 1987.

Jones, M., "General Gray with Medal in Hand Thanks PFC," Navy Times, V. 37, April 18, 1988.

Jones, M., "CMC's First Year Wins Favor Among Marines," Navy Times, V. 37, July 4, 1988.

Jordan, B., "CMC: His Goals for the Corps," Leatherneck, V. LXXI, November 1988.

Keiser, G.W., "The Long March: Membership of the Commandant in the JCS," Marine Corps Gazette, V. 73, August 1989.

Kopca, J., Col., USMC, MCCDC, Quantico, Virginia, interview with Dr. N.C. Roberts on August 18, 1989.

Kruzel, J. and Korb, L., American Defense Journal 1986-7, Lexington Books, 1986.

Lind, W.S., Maneuver Warfare Handbook, Westview Press, 1985.

Lorange, P., Implementation of Strategic Planning, Prentice Hall, Inc., 1982.

MAGTF Supporting Plans Vol. I--User Guide (Draft), USMC, MCCDC, undated.

Marine Corps Campaign Plan (MCCP), (Draft), USMC, MAGTF Warfighting Center, MCCDC, undated.

Marine Corps Gazette, "News," editors, V. 72, January 1988.

Marine Corps Gazette, "News," editors, V. 73, March 1989.

Marine Corps Gazette, "News," editors, V. 73, July 1989.

Marine Corps Gazette, "News," editors, V. 73, September 1989.

Marine Corps Institute, "Department of Defense," Command and Staff College Nonresident Program (7701E), Marine Barracks, Washington D.C., 1984.

Marine Corps Long-Range Plan (MLRP) (Draft), USMC, MAGTF Warfighting Center, MCCDC, undated.

Marine Corps Manual, MCBul 5600, HQMC, Washington, D.C., 1980.

Marine Corps Planning and Programming Manual, HQO 3121.E, HQMC, Washington, D.C., March 5, 1984.

Mullarkey, LtCol., USMC, MCDCC, Quantico, Virginia, interview with authors on June 28, 1989.

OH 3-1A, The Marine Joint Staff Officer, USMC, MCDEC, Quantico, Virginia, January 1987.

Palm, L., Col., USMC, HQMC, Washington, D.C., interview with authors on October 25, 1989.

Peters, T., Thriving on Chaos: A Handbook for a Management Revolution, Harper and Row Publishers, 1987.

Ponnwitz, A.J., LtCol., USMC, MCCDC, Quantico, Virginia, interview with authors on June 22, 1989.

Ponnwitz, A.J., LtCol., USMC, Point Paper, "The Marine Corps Service Planning Process," December 18, 1988.

Ponnwitz, A.J., LtCol., USMC, Briefing Papers, undated.

President's Blue Ribbon Commission on Defense Management, National Security Planning and Budgeting, June 1986.

Quinn, J.B., Mintzberg, H., and James, R.M., The Strategy Process, Prentice-Hall, 1988.

Radford, K.J., Strategic Planning: An Analytical Approach, Reston Publishing Company, Reston, Virginia, 1980.

Random House Dictionary of the English Language, 2d ed., unabridged, Random House, 1987.

Ruby, T.M., "Wargame Challenges Corps' Generals," Quantico Sentry, V. 54, October 20, 1989.

Scharfen, J.C., "The Marine Corps in 1987," U.S. Naval Proceedings/Naval Review 1988, V. 114, May 1988.

Scharfen, J.C., "The Marine Corps in 1988," U.S. Naval Proceedings/Naval Review 1989, V. 115, May 1989.

Smith, P.M., Allen, J.P., Stewart II, J.H., and Whitehouse, F.D., Long-Range Planning: A National Necessity, National Defense University Press, 1987.

Steiner, G.A., Strategic Planning: What Every Manager Must Know. The Free Press, New York, N.Y., 1979.

Stoner, J.A.F. and Wankel, C., Management, 3rd ed., Prentice-Hall, 1986.

Strickland, A.J. III, and Thompson, A.A. Jr., Strategic Management, 3d ed., Business Publications Inc., 1984.

Tactical Systems Acquisition Manual: An Overview of the Process and Participants, USMC, MCRDAC, March 1989.

Thomas, C.V., "Much To Be Proud, Much To Strive For," Seapower Magazine, V. 30, November 1987.

Tritten, J., and Roberts, N., "Strategic Management or Strategic Planning for Defense?", Report, Naval Postgraduate School, Monterey, California, February 1, 1989.

Weeks, L.L., and Pelli, J.A., "A More Purple Shade of Green," U.S. Naval Proceedings, V. 113, November 1987.

Wheelen, T.L., and Hunger, J.D., Strategic Management and Business Policy, 2d ed., Addison-Wesley Publishing Company, 1986.

Winglass, R.J., "The Marine Corps Newest Command, MCRDAC, Activated," Marine Corps Gazette, V. 72, January 1988.

INITIAL DISTRIBUTION LIST

		No. Copies
1.	Defense Technical Information Center Cameron Station Alexandria, Virginia 22304-6145	2
2.	Library, Code 0142 Naval Postgraduate School Monterey, California 93943-5002	2
3.	Director of Research (Code 012) Naval Postgraduate School Monterey, California 93943-5000	1
4.	Chairman, Code 56 Department of National Security Affairs Naval Postgraduate School Monterey, California 93943-5000	1
5.	Dr. David R. Whipple, Code 54Wp Department of Administrative Sciences Naval Postgraduate School Monterey, California 93943-5000	1
6.	Andrew Marshall Director, Net Assessment OSD/NA Room 3A930 Office of the Secretary of Defense Washington, D.C. 20301	5
7.	Center for Naval Analyses 4401 Ford Avenue Alexandria, Virginia 22302	1
8.	Professor James Tritten, Code 56Tr Department of National Security Affairs Naval Postgraduate School Monterey, California 93943-5000	1
9.	LTC Steven Richie, USAF Competitive Strategies Office OSD/ES (CSO) PNT Room 1E801/5 Office of the Secretary of Defense Washington, D.C. 20301	1

10. Commandant of the Marine Corps 1
Code TE 06
Headquarters, U.S. Marine Corps
Washington, D.C. 20380-0001

11. BGEN P.K. Van Riper, USMC 1
Code TE20
Vice President Marine Corps University
MCCDC, Training and Education Center
Quantico, Virginia 22134

12. COL A.J. Ponnwitz, U.S. Marine Corps 1
Naval War College
Newport, Rhode Island 02840

13. CAPT Jerry Murphy, USN 1
Chief Strategic Planning
USD A PI/SP Room 310
Office of the Secretary of Defense
Washington, D.C. 20301

14. COL Donald Snider, USA 2
Director, Defense Policy
OEB Room 308
National Security Council Staff
17 Pennsylvania Avenue
Washington, D.C. 20506

15. Professor Nancy C. Roberts, Code 54Rc 1
Department of Administrative Sciences
Naval Postgraduate School
Monterey, California 93943-5000

16. Professor Darnell Whitt, Code 6417 1
Defense Resources Education
Management Center
Naval Postgraduate School
Monterey, California 93943-5000

17. Dr. James Blandin, Code 64 1
Executive Director
Defense Resources Management
Education Center
Naval Postgraduate School
Monterey, California 93943-5000

18. Dr. Paul Y. Hammond 1
Graduate School of Public and
International Affairs
University of Pittsburg
Pittsburg, Pennsylvania 15260

19. Dr. Richard T. Ackley 1
Commander, U.S. Navy (Ret.)
Director, National Security Studies
California State University, San Bernardino
5500 University Parkway
San Bernardino, California 92407

20. LTC Williams R. Vincent, USA 1
J-7, Strategy Division
The Joint Staff
PNT Room 2E949
Washington, D.C. 20301

21. LTC Ken Alard, USA 1
DACS-ZBAS PNT Room 3C641
Department of the Army
Washington, D.C. 20310-0200

22. COL Rich Hodory, U.S. Marine Corps 1
HQBN, 1st Mar Div, FMF
Camp Pendleton, California

23. COL R.J. Mastrion, U.S. Marine Corps 1
Code WP 12
Head Doctrine Development Branch
MCCDC, Warfighting Center
Quantico, Virginia 22134

24. COL Les Palm, U.S. Marine Corps 1
Secretary of the Chief of Staff
Headquarters, U.S. Marine Corps
Washington, D.C. 20380

25. COL David J. Andre, USA 1
Special Assistant for Analysis
ODUSD (Planning and Resources)
PNT Room 3A7&8
Office of the Secretary of Defense
Washington, D.C. 20321-2100

26. Deputy Chief of Naval Operations 1
Navy Program Planning (OP-081)
Program Resources Appraisal
PNT Room 4A530
Washington, D.C. 20350

27. COL David G. Hansen, USA 1
Chairman
Department of National Security and Strategy
U.S. Army War College
Box 484
Carlisle Barracks, Pennsylvania 17013-5050

28. COL John J. Hickey, Jr., USA 1
ATTN: AWCI Root Hall Room A218
Strategic Studies Institute
U.S. Army War College
Carlisle Barracks, Pennsylvania 17013

29. CAPT William S. Johnson, USN 1
OP-06A
PNT Room 4E592
Office of the Chief of Naval Operations
Washington, D.C. 20301

30. COL Don Price, U.S. Marine Corps 1
Department of Strategy
National War College
FT. Leslie J. McNair
Washington, D.C. 20319-6000

31. CAPT Michael Martus, USN 1
OP 603
PNT Room 4E486
Office of the Chief of Naval Operations
Washington, D.C. 20350

32. Dr. Kleber S. Masterson 1
Rear Admiral, U.S. Navy (Ret.)
Crystal Square #2, Suite 1100
17125 Jefferson Davis Highway
Arlington, Virginia 22201-4158

33. COL John P. Kopca, U.S. Marine Corps 1
Code C-05
Special Assistant to the CG
Office of the Military Secretary
MCCDC, Headquarters
Quantico, Virginia 22134

34. COL B. Herbert, U.S. Marine Corps 1
Code C-05
Military Secretary
MCCDC, Headquarters
Quantico, Virginia 22134

35. LTCOL G.S. Converse, U.S. Marine Corps 1
Director, Special Projects Directorate
Headquarters, U.S. Marine Corps
Washington, D.C. 20380

36. CAPT Michael A. McDevitt, USN 1
Executive Director
OP-00K
CNO Executive Panel
Center for Naval Analysis
4401 Ford Avenue
Alexandria, Virginia 22302

37. Dr. Jeffrey S. Milstein 1
Strategic Analyst and Planner
Organization of the Joint Chiefs of Staff
Plans and Policy Directorate
Strategy Division
PNT Room 2E949
Washington, D.C. 20301

38. Dr. James Roche 1
Captain, U.S. Navy (Ret.)
Northrop Analysis Center
2 Lafayette Centre
1133 21st Street, NW
Washington, D.C. 20036

39. Dr. Perry Smith 1
Major General, U.S. Air Force (Ret.)
7217 Van Ness Court
Mclean, Virginia 22101

40. LTCOL John J. Mullarkey, U.S. Marine Corps 1
Code WT 11
P&R Branch, MAGTF Section
MCCDC, Warfighting Center
Quantico, Virginia 22134

41. LTCOL H.K. Barnes, U.S. Marine Corps 1
CODE TE 20
Head Art of War Division, C&S Col.
MCCDC, Training and Education Center
Quantico, Virginia 22134

42. Major Dick Metcalf, U.S. Marine Corps 1
Code WT 10
Concepts Branch
MCCDC, Warfighting Center
Quantico, Virginia 22134

43. Professor Richard S. Elster, Code 54El 1
Department of Administrative Sciences
Naval Postgraduate School
Monterey, California 93943-5000

44. Professor Roger Evered, Code 54Ev 1
Department of Administrative Sciences
Naval Postgraduate School
Monterey, California 93943-5000

45. Jim Morrison 1
Vice President for Policy
Business Executives for National Security
601 Penn Ave, NW, Suite 700
Washington, D.C. 20004-2602

46. Mike Burns 1
Vice President for Policy
Business Executives for National Security
601 Penn Ave, NW Suite 700
Washington, D.C. 20004-2602

47. Library 1
Naval War College
Newport, Rhode Island 02840

48. Library 1
Air War College
Maxwell AFB, Alabama 36112

49. Library 1
Army War College
Carlisle Barracks, Pennsylvania 17013-5050

50. Library 1
Armed Forces Staff College
Norfolk, Virginia 23511-6097

51. Library 1
National Defense University
FT Leslie J. McNair
Washington, D.C. 20319

52. MAJ. Terry L. Hilliker, U.S. Marine Corps 1
29 Vista Woods Road
Stafford, Virginia 22554

53. CAPT William S. Jesson, U.S. Marine Corps 1
Co. 'B', HQBN, HQMC
Washington, D.C. 20380

54. Professor James E. Suchan, Code 54Sa 1
Department of Administrative Sciences
Naval Postgraduate School
Monterey, California 93943-5000

55. LtCol Donald E. Summers, USMC 1
Code 0309
U.S. Marine Corps Liaison
Naval Postgraduate School
Monterey, California 93943-5000