DTIC FILE COPY

(1)

Research Report 1461

AD-A193 085

Field Evaluation of a Computer-Based Maintenance Training Program for Reserve Component Units

Scott E. Graham

ARI Field Unit at Fort Knox, Kentucky
Training Research Laboratory

DTIC
ELECTE
MAR 24 1988
S D
H

U. S. Army

Research Institute for the Behavioral and Social Sciences

December 1987

Approved for public release; distribution unlimited.

88 3 22 123

U. S. ARMY RESEARCH INSTITUTE
FOR THE BEHAVIORAL AND SOCIAL SCIENCES

A Field Operating Agency under the Jurisdiction of the

Deputy Chief of Staff for Personnel

EDGAR M. JOHNSON
Technical Director

WM. DARRYL HENDERSON
COL, IN
Commanding

Technical review by

Billy L. Burnside
Theodore M. Shlechter

NOTICES

DISTRIBUTION: Primary distribution of this report has been made by ARI. Please address correspondence concerning distribution of reports to: U.S. Army Research Institute for the Behavioral and Social Sciences, ATTN: PERI-POT, 5001 Eisenhower Ave., Alexandria, Virginia 22333-5600.

FINAL DISPOSITION: This report may be destroyed when it is no longer needed. Please do not return it to the U.S. Army Research Institute for the Behavioral and Social Sciences.

NOTE: The findings in this report are not to be construed as an official Department of the Army position, unless so designated by other authorized documents.

UNCLASSIFIED
SECURITY CLASSIFICATION OF THIS PAGE

ADA193085

REPORT DOCUMENTATION PAGE

1a. REPORT SECURITY CLASSIFICATION Unclassified	1b. RESTRICTIVE MARKINGS
2a. SECURITY CLASSIFICATION AUTHORITY --	3. DISTRIBUTION / AVAILABILITY OF REPORT Approved for public release; distribution unlimited.
2b. DECLASSIFICATION / DOWNGRADING SCHEDULE --	
4. PERFORMING ORGANIZATION REPORT NUMBER(S) ARI Research Report 1461	5. MONITORING ORGANIZATION REPORT NUMBER(S) --
6a. NAME OF PERFORMING ORGANIZATION U.S. Army Research Institute Field Unit - Fort Knox 6b. OFFICE SYMBOL (If applicable) PERI-IK	7a. NAME OF MONITORING ORGANIZATION --
6c. ADDRESS (City, State, and ZIP Code) Fort Knox, KY 40121-5620	7b. ADDRESS (City, State, and ZIP Code) --
8a. NAME OF FUNDING / SPONSORING ORGANIZATION U.S. Army Research Institute 8b. OFFICE SYMBOL (If applicable) --	9. PROCUREMENT INSTRUMENT IDENTIFICATION NUMBER --
8c. ADDRESS (City, State, and ZIP Code) 5001 Eisenhower Avenue Alexandria, VA 22333-5600	10. SOURCE OF FUNDING NUMBERS PROGRAM ELEMENT NO. 6.37.43.A PROJECT NO. 20263743 A794 TASK NO. 5.1.2 WORK UNIT ACCESSION NO. 5.1.2.H.1

11. TITLE (Include Security Classification)
Field Evaluation of a Computer-Based Maintenance Training Program for Reserve Component Units

12. PERSONAL AUTHOR(S)
Scott E. Graham

13a. TYPE OF REPORT	13b. TIME COVERED	14. DATE OF REPORT (Year, Month, Day)	15. PAGE COUNT
Final Report	FROM 01/86 TO 07/37	December 1987	94

16. SUPPLEMENTARY NOTATION
--

17. COSATI CODES		
FIELD	GROUP	SUB-GROUP

18. SUBJECT TERMS (Continue on reverse if necessary and identify by block number)
Computer-Based Training; Training simulators; ~~Maintenance;~~ Computer-Based Instruction; Armor; Army training; Tanks (Combat Vehicles); Performance (Human).

19. ABSTRACT (Continue on reverse if necessary and identify by block number)
The Model Training Program for Reserve Component Units (MTP-RC) is a computer-based training program designed to train and sustain M1 Tank troubleshooting and maintenance skills in the absence of actual equipment. This research evaluated the effectiveness of the MTP-RC as part of a yearlong trial implementation in three RC units. Participating soldiers were administered hands-on pretests and posttests in which they performed actual troubleshooting procedures on M1 tanks. Combined across four MOS, the performance of 35 soldiers improved from a 36% GO rate on the pretest to an 82% GO rate on the posttest. Paper-and-pencil tests were also administered to compare RC soldier performance to soldiers graduating from resident Advanced Individual Training. The results indicated that the technology-based training concept employed in the MTP-RC is effective for training maintenance skills. Plans are being made to convert the MTP-RC to an Electronic Information Delivery System (EIDS)-compatible format and to develop additional training on other weapons system using the validated MTP-RC training concept. Keywords:

20. DISTRIBUTION / AVAILABILITY OF ABSTRACT ☒ UNCLASSIFIED/UNLIMITED ☐ SAME AS RPT. ☐ DTIC USERS	21. ABSTRACT SECURITY CLASSIFICATION Unclassified
22a. NAME OF RESPONSIBLE INDIVIDUAL Scott E. Graham	22b. TELEPHONE (Include Area Code) (502) 624-2613 22c. OFFICE SYMBOL PERI-IK

DD FORM 1473, 84 MAR — 83 APR edition may be used until exhausted. All other editions are obsolete.

SECURITY CLASSIFICATION OF THIS PAGE
UNCLASSIFIED

Research Report 1461

Field Evaluation of a Computer-Based Maintenance Training Program for Reserve Component Units

Scott E. Graham

ARI Field Unit at Fort Knox, Kentucky
Donald F. Haggard, Chief

Training Research Laboratory
Jack H. Hiller, Director

U.S. ARMY RESEARCH INSTITUTE FOR THE BEHAVIORAL AND SOCIAL SCIENCES
5001 Eisenhower Avenue, Alexandria, Virginia 22333-5600

Office, Deputy Chief of Staff for Personnel
Department of the Army

December 1987

Army Project Number
2Q263743A794

Education and Training

Approved for public release; distribution unlimited.

FOREWORD

Renewed emphasis is being placed on the development of high-quality training materials designed specifically to meet the needs of Reserve Component (RC) units. This report describes the evaluation of such a program, the Model Training Program for Reserve Component Units (MTP-RC). The technology-based MTP-RC is a joint project of the Army Research Institute and Training and Doctrine Command's (TRADOC's) Training Technology Agency and is attempting to produce a partial solution to RC maintenance training problems. The program uses computer-based simulations, interactive videodisc techniques, and a three phase instructional approach to train RC soldiers to maintain the M1 tank in the absence of actual equipment.

This report describes the results of a yearlong trial implementation of the MTP-RC in three RC units. The results of the evaluation demonstrate that the technology-based approach used in MTP-RC is effective, as hands-on troubleshooting performance increased from 36% to 82% following the training. These results have been presented to the project sponsors, TRADOC, Forces Command (FORSCOM), and the Armor and Ordnance schools, in October 1987. Plans are being made to convert the courseware to the Electronic Information Delivery System (EIDS) for possible Army-wide distribution and to use the validated MTP-RC instructional approach in the development of computer-based training for other systems.

EDGAR M. JOHNSON
Technical Director

DTIC COPY INSPECTED 2

Accession For	
NTIS GRA&I	☑
DTIC TAB	☐
Unannounced	☐
Justification	
By	
Distribution/	
Availability Codes	
Dist	Avail and/or Special
A-1	

FIELD EVALUATION OF A COMPUTER-BASED MAINTENANCE TRAINING PROGRAM FOR RESERVE COMPONENT UNITS

EXECUTIVE SUMMARY

Requirement:

Reserve Components (RC) maintenance units are required to develop levels of wartime proficiency on weapons systems for which they have little access for training. In response, the Army Research Institute (ARI) and Training and Doctrine Command's (TRADOC's) Training Technology Agency have developed a Model Training Program for Reserve Component Units (MTP-RC), which is designed to train M1 tank troubleshooting and maintenance skills in the absence of actual equipment. The MTP-RC contains four separate MOS courses with approximately 40 hours of training per course. The training requires the soldier to use the actual M1 tank technical manuals and relies heavily on two-dimensional troubleshooting simulations.

The purpose of this research was to assess whether the technology-based training concept employed in the MTP-RC is effective for training and sustaining RC maintenance skills. The research also compared the maintenance skills and knowledge of RC soldiers to soldiers graduating from resident Advanced Individual Training (AIT).

Procedure:

The MTP-RC systems were placed in three RC units for approximately 1 year. Hands-on performance tests were administered at the beginning and end of the trial implementation period to a total of 35 soldiers from the four MOS. The hands-on tests developed for each MOS required the soldiers to perform five or six troubleshooting and maintenance tasks on the M1 tank. Each task was scored GO/NO GO, making percent GOs the primary dependent variable. MOS-specific paper-and-pencil (P&P) tests were also given to participating RC soldiers before and after MTP-RC training and to 240 soldiers graduating from AIT at the Ordnance and Armor Schools.

Findings:

Soldiers from all four MOS showed marked improvement from the hands-on pretest to the posttest. Percent GOs increased from 46% to 83%, 40% to 89%, 36% to 64%, and 28% to 87% for MOS 45E, 63E, 45K, and 63H, respectively. Similar increases were found on the P&P tests. These results were taken to demonstrate that the MTP-RC is an effective means of training M1 tank maintenance skills. The P&P scores showed the organizational MOS soldiers to be at about the same knowledge and skill levels as AIT graduates, both before and after training. These RC soldiers were, however, from a unit having M1 tanks. The P&P scores of the Direct Support/General Support (DS/GS) soldiers indicated that their M1 tank knowledge and skills were considerably below AIT

levels and that the MTP-RC helped reduce the discrepancy. With few exceptions, the DS/GS soldiers had previously received no formal M1 tank training nor had they had any contact with M1 tanks during the year.

Utilization of Findings:

TRADOC has deemed the MTP-RC training concept to be successful. Plans are being discussed within TRADOC to use the validated MTP-RC approach in the development of maintenance training for other weapons systems (e.g., the Bradley Fighting Vehicle). Plans are also underway to convert the MTP-RC courseware to the Electronic Information Delivery System (EIDS) so that Army-wide distribution will be possible. The MTP-RC systems are currently being used to train RC soldiers at the Regional Training Site-Maintenance at Fort Bragg and the High Technology Training Center at Fort Dix, and to provide refresher training to instructors at the Ordnance School.

FIELD EVALUATION OF A COMPUTER-BASED MAINTENANCE TRAINING PROGRAM FOR RESERVE COMPONENT UNITS

CONTENTS

	Page
INTRODUCTION	1
Course Description	2
Formative Evaluation	3
Purpose of Research	4
METHOD	4
Participants	4
Test Materials	5
Procedure	7
RESULTS	9
DISCUSSION	14
REFERENCES	18
APPENDIX A. SCORING CHECKLISTS USED IN HANDS-ON TEST	A-1
B. DD FORM 2404 USED IN HANDS-ON TEST	B-1
C. 63H PAPER AND PENCIL TEST	C-1
D. TECHNICAL MANUAL TEST	D-1
E. PAPER AND PENCIL TEST SCORES	E-1

LIST OF TABLES

Table 1. Tasks included in MOS hands-on tests	5
2. Mean pretest and posttest scores by MOS	11
3. GO rates of 63H soldiers receiving ASI and/or MTP-RC training	12
4. GO rates of 45E and 63E soldiers by MATES employment	12
5. Pretest, posttest, and AIT P&P scores by MOS	13

Page

LIST OF FIGURES

Figure 1. Hands-on pretests and posttests for four MOSs 10

FIELD EVALUATION OF A COMPUTER-BASED MAINTENANCE TRAINING PROGRAM FOR RESERVE COMPONENT UNITS

INTRODUCTION

Maintenance units in the Reserve Components (RC) are facing significant training challenges as new high technology weapon systems are introduced into the Army inventory. Army National Guard (ARNG) combat units are being issued the same M1 tanks, Bradley Fighting Vehicles, and M60A3 tanks that active forces are receiving. US Army Reserve (USAR) forces, which make up the majority of the Combat Service Support units, likewise have post mobilization responsibilities that require them to maintain new equipment. The challenge is for RC maintainers to attain and sustain acceptable levels of proficiency on these new weapon systems.

RC units have essentially the same wartime proficiency requirements as do active component (AC) units, despite much tougher training conditions. The most critical factor impacting RC training remains time. RC units are officially allocated 39 training days per year, split between a two week annual training (AT) period and monthly drills. RC units therefore have about 1/5 of the training time allocated AC units to meet the same combat readiness requirements. A recent report on RC training by the Army Training Board (1987) further identifies dispersion as a major training barrier. At battalion level, for example, RC units typically are spread out over a 150-mile radius, as compared to AC battalions which are typically clustered within one mile. In addition, RC units are frequently short of trained cadre and training support materials. A reserve maintenance battalion, which under the CAPSTONE program would round out a division with M1 tanks, has little access to these tanks for training. The unit must train and sustain M1 tank troubleshooting and maintenance skills in the absence of actual equipment.

Performance reports of ARNG units at the National Training Center (NTC) indicate maintenance performance (along with physical conditioning) needs the most improvement (Word, 1987). COL Word attributes the problem, in part, to National Guard units having full-time personnel to maintain the equipment, e.g., at Mobilization and Training Equipment Sites (MATES), rather than being completely responsible for maintenance themselves. He further states that maintenance is the area in which ARNG units probably used to be strongest, but now may be weakest. This maintenance performance deficiency is largely due to the technological sophistication of new equipment and limited training opportunities.

The Model Training Program for Reserve Component units (MTP-RC) is a joint project of the Army Research Institute (ARI) and the Training and Doctrine Command's Training Technology Agency and is attempting to produce at least a partial solution to the RC maintenance training problems. The MTP-RC contains approximately 160 hours of computer-based instruction (CBI) including M1 tank maintenance simulations. CBI was selected as the medium for the experimental technology-based training concept used in the MTP-RC because it holds the potential to address many of the specific problems found in RC maintenance training.

CBI has been shown to reduce training time (e.g., Orlansky & String, 1979) which can allow more maintenance procedures to be covered within existing time constraints. Subject matter and training expertise can be built

into the instruction which permits training to standardized levels of performance at remote locations. CBI can teach theory, in addition to procedural steps, and the instruction can readily be paired with simulated and hands-on experience. Lessons on troubleshooting can require the student to follow procedural steps found in Technical Manuals (TMs) and at the same time explain why the steps are being performed. The distributed nature of monthly RC training is also well suited for CBI, as systems can be made to monitor individual progress and direct training. Lastly, CBI reduces the reliance on Actual Equipment Trainers (AET) which can be expensive, dangerous to work on, and in the case of the M1 tank, absent from RC home station training facilities. The MTP-RC has attempted to capitalize on these potential attributes.

Course Description

The MTP-RC contains separate courses for training four Military Occupational Specialities (MOS):

- o 45E - M1 Abrams Tank Turret Mechanic
- o 63E - M1 Abrams Tank Systems Mechanic
- o 45K - Tank Turret Repairer
- o 63H - Track Vehicle Repairer

Each course contains approximately 40 hours of courseware and primarily trains skill level 2 maintenance tasks to turret and hull mechanics at the organizational and direct support/general support (DS/GS) level. A primary goal of the MTP-RC is to sustain RC maintenance skills on equipment systems which are not physically available. This is accomplished by ensuring that soldiers have the fundamental skills to use the TMs by including both remedial instruction and repeated practice in using the TM to troubleshoot simulated equipment. For a more detailed description of the courseware development process refer to Graham (1986) and Marco, Begg, Israelite and Berstein (1986).

Each course begins with a set of lessons that trains the soldier how to use the MTP-RC training program. The courseware is designed such that once the soldier is logged onto the system, all interactions are done with a light pen. The student then receives refresher training on the Simpson digital multimeter, breakout box, and STE-M1 test sets. Also included are reviews of how to use the TMs and and tank safety requirements.

Following the introductory lessons, the four MOS-specific courses are organized by tank system. Each unit begins with a lesson that describes the principles of a particular system, e.g., the fuel supply system. The first segment describes the" Name, Location, and Function" of each part within that system. A second segment, discusses the "Input, Processes, and Output" of these same components. This basic structure is repeated in each "Principles of Operations" lesson. Given the RC training schedule, the uniform template structure was used to help students remain familiar with the lesson structure from month to month and thereby reduce training time.

The primary objective of the courseware is to train soldiers to use the TMs to troubleshoot M1 tank systems. To this end, most of the MTP-RC courseware consists of troubleshooting segments. Each troubleshooting lesson begins by introducing a particular symptom within the system being trained. The introduction includes a conceptual explanation of what system components could be causing the fault. The troubleshooting lesson then presents a "Guided Demonstration" for troubleshooting that system in which each procedural step from the TM is cued on the screen. Two "Practical Exercises" follow for the same symptom, each terminating in a different fault. For example for fuel supply system fault-5, "Fuel gage reads zero in all fuel tank selector switch positions", one exercise branches to find a faulty hull networks box, while another identifies the driver's instrument panel.

The courseware requires the student to read the TM while troubleshooting. By using the lightpen, the soldier interacts with high resolution color graphics and is able to move around in the tank, connect simulated equipment, and receive diagnostic readouts. Action "icons" or graphics at the bottom of the screen permit the student to connect, disconnect, inspect, remove, or replace parts and equipment.

If the student reads, "Connect red multimeter lead to point 16 on the breakout box," the student would first touch the "connect" icon and then the red lead. The screen would show, "Connect red lead to what?". The student would touch the appropriate point on the breakout box and the graphic would change to show the connection had been made. Feedback is given after each step, and when an error is made, the correct step is identified with a green graphic overlay. A student management system keeps records of errors and training progress.

The 63H courseware for DS/GS hull mechanics trains the identification and repairing of bad engine and transmission parts. The majority of the interactions in the 63H maintenance simulations are with videodisc pictures of actual equipment rather than computer graphics. The soldiers are shown pictures of good and bad engine and transmission components and are trained to discriminate between them. The simulation training then, for example, has the soldier remove brake pads or gear sprockets, inspect them for wear, and then replace the parts.

At any point during the troubleshooting, various types of advice are available. The soldier can get an explanation of why the current steps are being performed, and frequently a detailed wiring diagram. Other types of advice include descriptions of the icons and information on the correct TM page number and next troubleshooting step.

Formative Evaluations

The courseware development process included a series of formative evaluations with active army soldiers at the Ordnance School, Aberdeen Proving Grounds (APG), and the Armor School, Fort Knox. The purpose of the evaluations was to make a preliminary assessment of training adequacy, for example, whether the reading level of the text was appropriate or whether the soldiers could follow the procedures in the troubleshooting simulations.

Graham, Shlechter, & Goldberg (1986) evaluated the transfer effectiveness of a segment of the MTP-RC training with soldiers at the Armor School. Soldiers who received the simulated troubleshooting training made fewer errors per period of time on hands-on troubleshooting tasks than did soldiers trained under conventional methods. The comparisons were, however, limited by ceiling effects. The skills and knowledge developed in the exercises also generalized to troubleshooting a task not specifically trained. This generalization was attributed to the fact that soldiers were trained and given practice on properly using the TM and test equipment.

The MTP-RC was designed to be used by RC soldiers in RC units, where the training environment differs greatly from the Armor School. The effectiveness of the MTP-RC therefore should be evaluated with the training system emplaced in RC units.

Purpose of Research

The purpose of the research was to:

1. Assess whether the technology-based training concept used in the MTP-RC is effective for training and sustaining M1 tank maintenance skills in RC units over a one year period.

2. Compare the maintenance skills and knowledge of RC soldiers to soldiers graduating from Advanced Individual Training (AIT).

As an overview, the research accomplished the above goals through several data collection efforts. Soldiers from three RC units were given hands-on and paper-and-pencil (P&P) pretests and then a year later corresponding posttests. For the comparison to AC resident training, only the P&P tests were administered and only at the end of AIT.

METHOD

Participants

Nineteen soldiers with organizational maintenance MOSs from the 2/252d AR, Red Springs, NC participated in the evaluation; there were 9 - 45Es and 10 - 63Es. A total of 35 DS/GS maintenance soldiers from the 195th Heavy Equipment Maintenance (HEM) Company, Westminister, MD and the 2198th HEM Company, Dagsboro, DE also participated. Of these, 11 were 45Ks and 24 were 63Hs. The soldiers' ranks ranged from private to sergeant first class. Most were specialist 4s, sergeants, or staff sergeants.

The soldiers enrolled in AIT resident training at the Armor and Ordnance Schools included 54 - 45Es, 67 - 63Es, 56 - 45Ks, and 63 - 63Hs. The ranks of these soldiers ranged from private to staff sergeant, with the vast majority having ranks of private and private first class.

The hands-on test evaluators were senior NCOs and Warrant Officers from the participating units, and Ordnance School instructors. The P&P tests were administered by DA civilians and contractors.

Test Materials

Hands-on Tests. The hands-on tests contained series of troubleshooting and maintenance tasks selected from those trained in the MTP-RC. A separate test was constructed for each MOS, with each test containing five or six tasks. In certain instances, the same task appeared on more than one MOS test, e.g., performing the STE-M1 self-test. Table 1 lists the tasks included in the four MOS tests. For each task, a system fault and the corresponding required procedure are indicated.

Table 1

Tasks Included in MOS Hands-on Test

System Fault	Required Procedure
45E	
1. Ammunition select lights do not come on.	Alternate troubleshooting procedure for computer system fault - 5
2. Vehicle master power cannot be turned on from commander's control panel.	STE-M1 1200 test
3. Main light does not come on when gun select switch is set to main position.	Alternate troubleshooting procedure for firing circuits subsystem fault - 8
4. All faults requiring STE-M1 test set.	STE-M1 self-test
5. All on-tank turret troubleshooting procedures.	Standard turret initial test conditions
63E	
1. Fuel gage reads zero in all tank selector switch positions.	Alternate troubleshooting procedure for fuel supply system fault - 5
2. Parking/service brake light does not come on when service brake is pressed for two minutes or more.	Parking brake system fault - 3
3. Tank will not move in forward or reverse ranges.	STE-M1 1100 test
4. All faults requiring STE-M1 test set.	STE-M1 self-test

5.	All on-tank hull troubleshooting procedures.	Standard hull initial test conditions
		45K
1.	Turret networks box fault-main gun does not fire from elevation hand pump.	Alternate troubleshooting procedure for turret network box circuit cards
2.	Commander's weapon station power control unit found faulty during vehicle troubleshooting.	Troubleshooting commander's weapon station-power control unit with DSESTS
3.	All faults requiring the Direct Support Electrical System Test Set (DSESTS).	DSESTS self-test
4.	All faults requiring STE-M1 test set.	STE-M1 self-test
5.	Vehicle master power cannot be turned on from commander's control panel.	STE-M1 1200 test
6.	Main light does not come on when gun select switch is set to main position.	Alternate troubleshooting procedure for firing circuits subsystem fault - 8
		63H
1.	Brakes do not stop or hold vehicle.	Remove and install left brake pack
2.	Engine faulty.	Inspect engine
3.	Parking/service brake light does not come on when service brake is pressed for two minutes or more.	parking brake system Fault - 3
4.	Tank will not move in forward or reverse ranges.	STE-M1 1100 test
5.	All faults requiring STE-M1 test set.	STE-M1 self-test
6.	All on-tank hull troubleshooting procedures.	Standard hull initial test conditions

The tests were constructed by the author and a retired warrant officer from the Ordnance School who worked for a contractor. Several of the tasks were truncated so that the procedure could readily be completed within 25 minutes. In certain cases, this meant that face plates were removed or that STE-M1 cables were partially connected. In all tasks, the initial conditions

were clearly specified and were the same for all soldiers, e.g., the multimeter switches were set a particular way at the beginning of a task. Appendix A contains the scoring checklists which list all special conditions for each task.

The tests were constructed so that each task began with the soldier receiving a DD Form 2404 which indicated only the fault symptom. Appendix B contains a representative DD Form 2404 used in the research. The first step in each task required the soldier to locate the correct procedure in the TM. If the soldier took longer than 10 minutes to locate the procedure, he or she was given a NO GO for that step and was shown the correct TM page. The checklists were structured so that each block of steps was scored GO/NO GO, which mostly corresponded to the procedural blocks in the TMs. Most task checklists included five to seven blocks.

Paper & Pencil Tests. Separate P&P tests were developed for the four MOSs and were reviewed by maintenance instructors at the Ordnance and Armor Schools. The tests contained sections on use of special test equipment, the digital multimeter, breakout box, and the TMs and troubleshooting, maintenance, and safety procedures. Appendix C contains the P&P test for MOS 63H, the other three tests being similar. The tests had a two hour time limit.

TM Test. A P&P test developed by the Ordnance School testing use of TMs was also used. The TM test is included as Appendix D and had a 1 1/2 hour time limit.

Procedure

Training. The MTP-RC systems were installed in the two DS/GS units in April 86 with training beginning a month later. The third system was installed at Red Springs, NC in August 86 with training beginning there in September. The implementation plan intended on having the MTP-RC systems placed in the three units for one year, with participating soldiers training four hours each monthly drill. Because of conflicting training missions, compromises to this plan were made.

Some training was conducted as planned during monthly drill periods. For the most part, however, participating soldiers were trained during the week and at night. The biggest exception was that the 195th HEM Company used the MTP-RC as part of its annual training (AT) program. In this case, soldiers trained for a solid week on the system, either before or after a weeks training with the rest of the unit at a major training area.

The MTP-RC courseware was designed to be delivered in training blocks dispersed evenly over a one year period, but this plan also was not realized. The 195th conducted the majority of its training in August 1986 as part of AT, with little training coming before or after. The 2/252d AR had its soldiers come in one night a week with training on four different nights. This schedule was in place for about six weeks, but was disrupted at the end of the fiscal year. Weekly training resumed several months later, but again was halted when the unit prepared for and conducted an NTC rotation. The training resumed in June. The 2198th also implemented weekly training at night

similar to the 2/252d AR, but most of their training occurred in the several months prior to the posttest.

The one year implementation period was selected so that enough time would be available to complete the MTP-RC courses. The majority of soldiers were not, however, able to finish the courseware. None of the nineteen soldiers taking the organizational maintenance training (45E and 63E) finished, completing an estimated 50% of the training. Six of seven soldiers did complete the 45K course, as this course was shorter. Three of twelve soldiers finished the 63H course completing an estimated 60% of the training. The number of soldiers indicated refer to those who took both the hands-on pretest and posttest and who were therefore included in the evaluation. Considerably more soldiers in the three units completed at least some MTP-RC training. For a detailed description of the trial implementation training process, see Begg (in review).

Hands-On Tests. The tests were set up such that each task was performed at a separate station. The stations, in most cases, consisted of an M1 tank, the necessary test equipment, and the appropriate TM with two TM distractors. The exceptions were that three 45K tasks required bench testing components removed from the tank (see appendix A). The 63H tests also included two tests on the brake pack and an inspection of a cutaway engine. For the 45K and 63H tests, each station accommodated two soldiers at once with two tanks, two brake packs or bench tests, and two evaluators. The soldiers rotated through the stations, with one soldier being tested at each station at all times. Each task had a 25 minute time limit, with the exception of the engine inspection task which had a 12 1/2 minute time limit.

The organizational maintenance tests were conducted outdoors at Fort Bragg at locations near the MATES. The two MOSs were tested on consecutive days. The DS/GS tests were conducted in maintenance bays in the M1 training facility at the Ordnance School. Turret and hull tests were administered simultaneously in different bays and required two consecutive days to complete. The pretests were held on consecutive weekends in April 86. The DS/GS posttests occurred in May 1987, with the organizational posttest in July 1987. With few exceptions, the same test evaluators scored the same tasks in the pretest and posttest.

Test evaluators were trained the scoring procedures the day before the pretests, at which time they practiced performing the tasks so as to be familiar with required procedures. The scoring procedures followed Standard Maintenance Testing Procedures and required the evaluators to check GO or NO GO on the scoring checklists for each block of steps. If a soldier made an error during a task, he had the opportunity to catch and correct the mistake on his own. This meant the soldier essentially had the entire 25 minutes to complete the task. When a soldier did something that could have injured him or damaged the equipment, the evaluator stopped him and gave him a NO GO for that block. If the 25 minute time period expired, the soldier was given NO GOs for all uncompleted blocks.

Each entire task was also scored GO or NO GO, with the soldier receiving a GO for the task when all blocks were correctly completed. Other performance measures extracted from the checklists were:

- Percent of attempted blocks
- Percent of successfully completed blocks
- Percent of times procedure was located in TM within 10 minutes
- Time to locate procedure in TM
- Time to complete task

During the hands-on testing, repeated checks were made at the stations to ensure all evaluators were applying the same rigorous standards. Observations of the 45K STE-M1 1200 test during the pretest revealed instances where scoring was deemed unacceptable. For example, soldiers were given credit for checking circuit breakers in the turret networks box without having to get into the tank. This task was eliminated from the analysis.

For various reasons, the number of soldiers taking the posttest was less than the number taking the pretest. In the end there were 7-45E, 8-63E, 7-45K, and 13-63H soldiers for a total of 35. Of these, two soldiers only took the hands-on posttest, and not the P&P posttest.

Paper and Pencil Tests. The P&P tests were administered the same day as the hands-on tests. Half took the P&P tests before the hands-on tests and vice versa. The P&P tests would, for example, be given in the morning with the hands-on test given in the afternoon. The TM test was only administered to DS/GS soldiers, because the test required a full rack of M1 TMs for each soldier. The test was administered in a special classroom at APG which contained multiple racks of TMs.

The same MOS-specific P&P tests were administered to the AIT students at the Ordnance and Armor Schools just prior to their taking the AIT final examinations.

RESULTS

The primary performance measure was percent GOs on the hands-on tests. Figure 1 shows that all four MOSs showed marked improvements from the pretest to the posttest.

Percent GOs was based on five tasks per soldier for the 45E and 63E MOSs and 6 tasks for the 63H. The 45K GO rates were based on four tasks. As discussed, the STE-M1 1200 Test was eliminated because of scoring irregularities. In addition, for this analysis the FCS-8 troubleshooting task was omitted from the 45K test because it was an organizational level task for which no one got GOs on either the pretest or posttest. The task was originally included because it was anticipated that DS/GS soldiers would complete some organizational courseware. Little, if any, extra-MOS training occurred in the DS/GS units. Eliminating the task from the analysis of GO rates does not affect the amount of improvement from pretest to posttest, but is thought to better reflect overall level of performance.

Combined across MOSs, performance of the 35 soldiers improved from a 36% GO rate on the pretest to an 82% GO rate on the posttest.

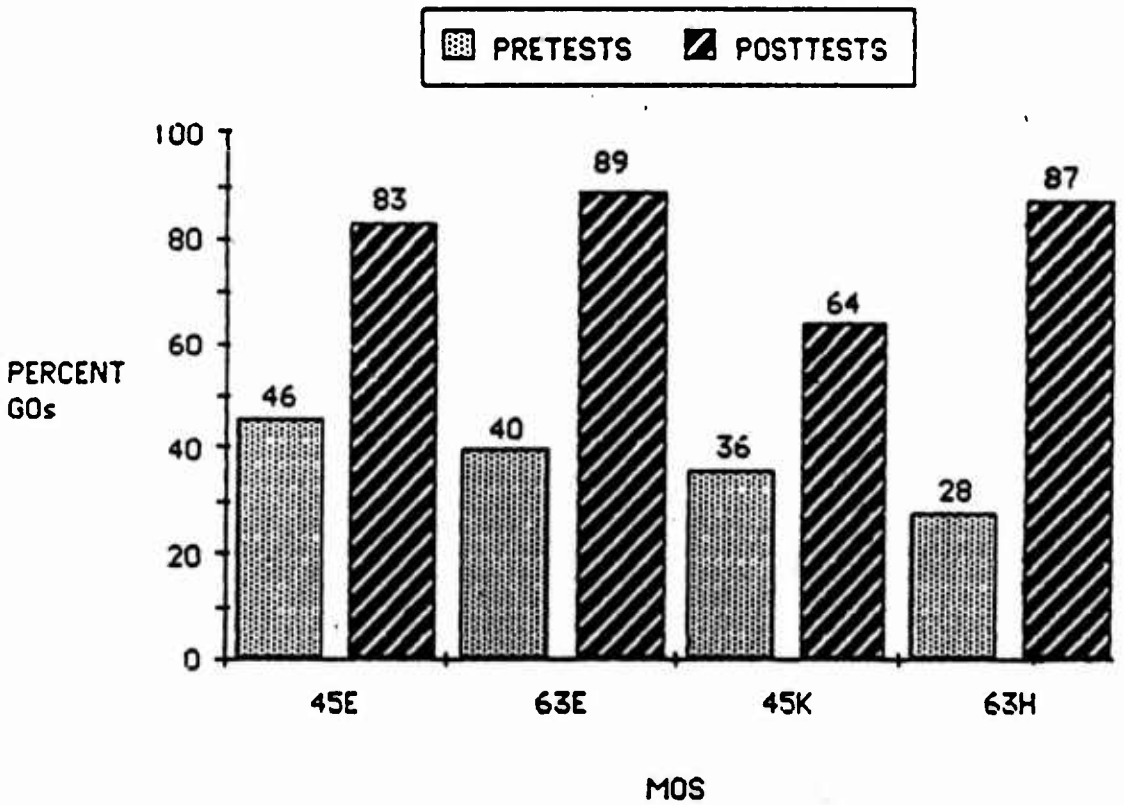

Figure 1. Hands-on pretests and posttests for four MOSs.

Dependent group t-tests on the various performance measures revealed that virtually all measures improved following training. Table 2 shows mean pretest and posttest scores for each measure separated by MOS.

Table 2

Mean Pretest and Posttest Scores by MOS

	Pretest	Posttest	t	p<
		45E		
			(df=6)	
% GOs	46	83	3.12	.05
% attempted blocks	93	100	3.36	.05
% completed blocks	77	97	2.78	.05
% TM time < 10 min.	69	100	2.75	.05
TM time (min.)	5.3	3.6	2.92	.05
Time to complete task (min.)	17.7	15.9	1.86	n.s.
		63E		
			(df=7)	
% GOs	40	89	3.33	.05
% attempted blocks	88	100	2.92	.05
% completed blocks	72	98	4.41	.01
% TM time < 10 min.	94	100	0.33	n.s.
TM time (min.)	5.5	2.9	5.57	.001
Time to complete task (min.)	20.7	16.6	3.76	.01
		45K		
			(df=6)	
% GOs	36	64	2.83	.05
% attempted blocks	68	75	2.55	.05
% completed blocks	53	69	4.44	.01
% TM time < 10 min.	54	74	2.29	.10
TM time (min.)	7.5	5.9	2.95	.05
Time to complete task (min.)	22.8	21.2	4.04	.01
		63H		
			(df=12)	
% GOs	28	87	6.57	.001
% attempted blocks	89	97	3.60	.01
% completed blocks	70	94	4.33	.001
% TM time < 10 min.	74	95	4.46	.001
TM time (min.)	5.47	4.07	2.68	.05
Time to complete task (min.)	21.3	18.4	4.92	.001

During the year long trial implementation, five soldiers participating in the program with MOS 63H also attended ASI resident training at APG. Table 3 shows that the pattern of pre- and posttest GO rates for these soldiers were essentially the same as those receiving only the MTP-RC training. None of the other 63H, nor any of the 45K soldiers, had otherwise completed formal ASI training. Somewhat interesting is that the soldiers who were independently selected for ASI training were the ones who scored lowest on the MTP-RC hands-on test.

Table 3

Go Rates of 63H Soldiers Receiving ASI and/or MTP-RC Training

	Pretest	Posttest
ASI and MTP-RC (n=5)	13%	83%
MTP-RC only (n=8)	37%	90%

Half of the soldiers with organizational MOSs who participated in the MTP-RC program also had fulltime jobs as MATES technicians. Most of these soldiers performed tank maintenance daily and were therefore considerably more experienced than the others. Table 4 shows that while the MATES employees had much higher pretest scores than the non-MATES soldiers, the posttest scores were not different. The MATES employees' scores may havebeen limited by a ceiling effect. One soldier, for example, had five of five GOs on the pretest and three others four of five. Of these, three had five of five GOs and one four of five GOs on the posttest.

Table 4

GO Rates of 45E and 63E Soldiers by MATES Employment

	Hands-on Pretest	Hands-on Posttest
MATES Employees (n=8)	62%	85%
Non-MATES Employees (n=7)	19%	88%

Analyses of the P&P tests further indicate that the MTP-RC training was effective. Table 5 shows pretest and posttest scores by MOS, as well as scores of recent AIT graduates. Appendix E contains a more complete listing of the P&P scores broken out by question content areas.

Table 5

Pretest, Posttest, and AIT P&P Scores by MOS

MOS-specific P&P Test	Pretest		Posttest		AIT
45E (100 items)	69.8 (n=7)	t(6)=1.77, n.s.	74.1 (n=7)	t(59)=.47, n.s.	72.6 (n=54)
63E (105 items)	61.3 (n=7)	t(6)=3.23, p<.05	70.3 (n=7)	t(72)=.57, n.s.	68.2 (n=67)
45K (100 items)	42.4 (n=7)	t(6)=4.36, p<.01	53.3 (n=7)	t(61)=1.95, n.s.	61.9 (n=56)
63H (115 items)	45.5 (n=12)	t(11)=5.03, p<.001	60.1 (n=12)	t(73)=2.24, p<.05	70.2 (n=63)

The P&P scores suggest the job knowledge and skills of the organizational MOS soldiers are at about the same level as recent AIT graduates. These soldiers from the 2/252d AR have M1 tanks in their units and routinely maintain them. The P&P scores of the DS/GS soldiers indicate their M1 tank knowledge and skills are considerably below AIT levels and that MTP-RC training helped reduce the discrepency. With the exception of the five soldiers who attended ASI training, these soldiers had no contact with M1 tanks during the year.

An examination of the P&P subtest scores in Appendix E substantiates these points. Following MTP-RC training, the 45E and 63E RC soldiers were statistically equivalent with the AIT graduates in all content areas, with the exception of the Power Distribution and Master Power Control subsystem in which the RC soldiers scored higher. A much different pattern was found for the DS/GS soldiers. Before the MTP-RC training, the RC DS/GS scored below the AIT graduates in virtually all content areas. Following the training, the RC-AIT gap had been significantly reduced in most areas, but generally still existed. The multiple analyses reflected in Appendix E are intended only as a general index of RC and AIT performance in each of the content areas. The inflated risk of Type I errors and the questionable reliability

of many subtests with so few items certainly prohibit any firm conclusions based on these data.

The P&P test results indicate that the MTP-RC training is generally effective across the board. Relative to AIT performance, the MTP-RC training was particularly effective relative to AIT performance for training use of the multimeter and tank safety. Improved multimeter skills were expected since the MTP-RC contains a large amount of training on alternate troubleshooting procedures which use the multimeter with the breakout box.

The MTP-RC training was not very effective in training the use of the entire set of M1 technical manuals, as measured by the Ordnance School TM test. Mean test scores for the 45K and 63H soldiers did increase from 24% to 31% which approached significance, $t(17) = 2.04$, $p<.06$. This level of performance still shows much room for improvement. Finding information in the 4 plus feet of TMs was overwhelming for most of the DS/GS soldiers, who again had very limited M1 experience. The first test item, for example, asked for the part number of a track connecting fixture. Virtually none of the soldiers knew this was a basic issue item, as opposed to a part of the tank per se. Lack of familiarity with the M1 tank made the TM test inordinately difficult. The results, taken together, indicate that the MTP-RC was effective at training how to find and execute troubleshooting and maintenance procedures in the organizational (-20) and DS/GS (-34) manuals, but not particularly effective for other TM related tasks.

DISCUSSION

The yearlong evaluation of the MTP-RC clearly demonstrated the program's effectiveness, as hands-on troubleshooting performance of participating soldiers increased from 36% to 82%. As a result, the MTP-RC has accomplished its goal of developing and validating a technology-based training concept for training and sustaining RC maintenance skills. The training concept used computer-based simulations, interactive videodisc techniques, and employed a three phase instructional approach.

The instructional approach first presented the soldier refresher training on diagnostic test equipment and procedures, use of technical manuals, and tank safety. Next the soldier received training on principles of operation of components within specific tank systems, including information on the inputs, processes, and outputs of each system component. The training culminated with troubleshooting exercises in which the soldier was required to follow the actual TM and conduct diagnostic tests on system components using two-dimensional computer-based simulations.

The MTP-RC was originally designed as sustainment training for soldiers who had received M1 transition training or AIT. The majority of the RC soldiers who participated in the year-long evaluation had not, however, previously received the prerequisite training. The validated training concept may therefore be appropriate for initial training, as well as for sustainment training. In no way does this imply the MTP-RC can wholly be substituted for AIT. The yearlong evaluation did, however, demonstrate the MTP-RC training was effective for training both novice mechanics and highly experienced mechanics, i.e., the MATES-employees.

Field evaluations, virtually by definition, are not well-controlled experiments, as events transpire during the evaluation period other than those being evaluated. Some of the performance gains from pretest to posttest are likely attributable to other factors, e.g., the NTC rotation of the 2/252d AR. On the other hand, the effectiveness of training, and of maintenance training in particular, may best be assessed after some time has passed during which the soldier has worked on the job. Gibson & Orlansky (1986), for example, state that a benefit of effective simulated maintenance training is experience readiness effects. Effective training is seen, in part, as providing a background on which on-the-job experiences can be processed and organized. Technicians receiving effective training tend to progress at a faster rate on the job than those not receiving effective training, with the experience readiness effects peaking at about 12 months.

Observations consistent with experience readiness effects were made in the MTP-RC evaluations. These observations were based on informal interviews with participating soldiers, unit leaders, and analyses of course utilization records. As mentioned, the MTP-RC was developed primarily to train in the absence of actual equipment. It was somewhat surprising then to find, that soldiers from the unit with M1 tanks seemed most enthusiastic about the simulated training. The reasons may be at least three-fold. First, the training may be more salient for soldiers with access to tanks, as they can go out and try the trained procedures. Secondly, the on-tank maintenance performed by the organizational mechanics are largely limited to routine checks and services. Even though soldiers regularly work on tanks, comprehensive MOS training is rarely received, e.g., on troubleshooting the firing circuits subsystem.

The third reason more experienced maintainers appreciated the MTP-RC may have been that the training integrated theory into the simulation exercises. In the past two decades, Army training has been driven by criterion-referenced testing. As a result, the training of theory has been deemphasized. By contrast, the MTP-RC trains M1 tank theory and much of the information on system principles is not presented anywhere else. Even senior NCOs from the Ordnance School, who reviewed the courseware as M1 tank subject matter experts (SME) said they learned a considerable amount about the interrelations of the tank systems and of the components within the various systems. The enthusiasm for the MTP-RC even came from the MATES technicians, who worked on tanks daily. As an example, one staff sergeant drove 52 miles each way to take the MTP-RC after working all day at the MATES. After he completed his MOS-course, he began training on the DS/GS level courses.

The hands-on pretest scores further support COL Word's (1987) observations of RC performance at NTC, in particular, that non-MATES maintenance performance is lacking. The MTP-RC evaluation found, however, that the non-MATES employees in the organizational unit showed the most improvement of any subgroup. This finding suggests that the MTP-RC paired with some hands-on training may be considerably more effective than simulation training alone. Plans are underway to develop a hands-on training package to complement MTP-RC training when tanks are available e.g., at Regional Training Sites for Maintenance (RTS-M).

One concern raised throughout the development of the MTP-RC and in evaluations of CBI in general is whether training effectiveness is limited by reading ability. The MTP-RC attempted to minimize reading effects by using Action Icons in the Troubleshooting Simulations and by keeping the text at a seventh grade reading level. Casual observations indicated certain soldiers in the RC units probably had reading levels below that level. In particular, two soldiers with poor reading ability were noted. In one case, the soldier could barely read the P&P test and not surpringly performed at near chance level on both the pre- and post P&P tests. In the other case, the soldier took 3 1/2 hours to complete lessons for which most soldiers took around one hour. On the hands-on tests, however, the two soldiers went from zero GOs on the pretest to five of five and five of six GOs on the posttest.

What makes the MTP-RC training effective? The first reason is that there is a real need in RC units for technical skills training, particularly for weapon systems that are not available for training. The large performance gains realized in the MTP-RC evaluation are in part due to the relatively low performance scores on the pretest. While not systematically sampled, the RC units selected for the trial implementation are probably representative of other RC units and their training problems.

The MTP-RC was also found to be effective because it trains skills which are fundamental to successful troubleshooting and maintenance performance. Foremost, the MTP-RC trains and gives repeated practice in using the TMs and diagnostic test procedures. Maintenance of high-tech tank subsystems is not like adjusting the carburetor of a car by how it sounds, but requires strict adherence to technical procedures delineated in the TMs. The MTP-RC requires the soldier to follow the actual TMs and to execute exact procedures in troubleshooting the simulated M1 tank systems.

Another advantage for the MTP-RC is that the simulations require less time than the actual procedures, which means more procedures can be trained. The simulated procedures are faster because test equipment and components can be connected and removed with the stroke of a lightpen. The training does, however, require the soldier to make all of the same decisions he or she would have to make in performing the actual task.

The training was also effective at training both low-aptitude or novice soldiers as well as highly experienced mechanics. At the low end, the MTP-RC trains the soldier to read and follow the step-by-step diagnostic procedures in the TMs. At the high end, the training integrates theory into the simulations which aids the high ability maintainer in understanding how the tank systems and subsystems work. This approach is consistent with the schools' recent efforts to develop master diagnosticians. At a different level, an officer from one DS/GS unit said that following the MTP-RC training, soldiers could for the first time talk intelligently about the M1 tank and test sets, and that the training had bolstered self-esteem.

A key aspect to the success of the program was the structured courseware development process. The process included the pairing of professional instructional designers (ID) and M1 tank SMEs, into teams and an iterative review process which included other SME/ID teams, as well as SMEs and education specialists from the Ordnance and Armor Schools. The iterative review

process, while costly and time consuming, may be necessary to guarantee quality in the final product. The development and review process also placed a strict emphasis on technical accuracy. As a result, in the year long evaluation there was not a single complaint about technical inaccuracies in the courseware. Refer to an MTP-RC report by Jay, Bernstein, and Gunderson (1987) for a description of computer-based training development times.

Technology-based training such as the MTP-RC can assist RC units in overcoming training challenges. The MTP-RC is, however, only a tool which must be used within RC system constraints. The bigger problems still remain, especially limited time. Even in this trial implementation, the RC units could not, as planned, train with the MTP-RC during normal drill periods. Future RC training strategies need to look at policy restructurings, particularly those which take advantage of emerging technology-based training solutions. The MTP-RC could for example, be used for home training or as part of a remote computer conferencing network. Some major changes are already being made in the way the RC can do business, for example, the building of the High Technology Training Center (HTTC) at Fort Dix and the RTS-Ms. RC training problems remain great, but the continuing development of innovative training strategies and technology-based training programs, such as the MTP-RC, can further enhance RC proficiency.

REFERENCES

Begg, J. (in preparation). Model Training Program For Reserve Component Units Final Report, (ARI Research Report). Alexandria, VA: U.S. Army Research Institute for Behavioral and Social Sciences.

Gibson, R.S. & Orlansky, J. (1986). Performance measures for evaluating the effectiveness of maintenance training. (IDA Paper P-1922). Alexandria, VA: Institute for Defense Analysis.

Graham, S.E. (1986). An automated classroom for Armor NCO training: A model training program for reserve component units (USAFA-TR-86-1). Proceedings of the 10th Symposium of Psychology in the Department of Defense, 173-177.

Graham, S.E., Shlechter, T.M. & Goldberg, S.L. (1986). A preliminary evaluation of a model maintenance training program for reserve component units, (ARI Research Report 1421). Alexandria, VA: US Army Research Institute for the Behavioral & Social Sciences.

Jay, J., Bernstein, K., & Gunderson, S. (1987). Estimating Computer-Based Development Times, (ARI Technical Report). Alexandria, VA: U.S. Army Research Institute for the Behavioral and Social Sciences.

Marco, R.A., Begg, J., Israelite, L., & Bernstein, K. (1986). An enhanced instructional design process for developing interactive courseware, (ARI Technical Report 713). Alexandria, VA: US Army Research Institute for the Behavioral and Social Sciences.

Orlansky, J. & String, J. (1979). Cost effectiveness of computer-based instruction in military training, (IDA P-1375). Arlington, VA: Institute for Defense Analysis.

U.S. Army Training Board (1987). Enhancing reserve component unit training. Fort Monroe, VA.

Word, L.E. (1987). Observations from three years at the National Training Center. (ARI Research Product 87-02). Alexandria, VA: U.S. Army Research Institute for the Behavioral and Social Sciences.

APPENDIX A

SCORING CHECKLISTS USED IN HANDS-ON TEST

45E

CS-5 Troubleshooting Computer Subsystem

Name:_____ Date:_____

Unit:_____ MOS:_____

Time: Start_____ Finish_____

Evaluator:_____

Soldier given DD Form 2404 "Ammunition select lights do not come on."

* Breakout Box Connected to TNB as in Block 1
* Multimeter set for continuity test, range 200 ohms, turned off.
* Tell soldier that no STE-M1 is available, go directly to alternate troubleshooting procedures

	GO	NO GO
1. Locates procedure in TM 9-2350-255-20-2-2-3, Para 18-5, Fig 18-44, Page 18-264.	_____	_____
	Time: _____	

* If soldier takes longer than 10 minutes, give a NO GO and show correct TM page.

2. (Block 1) Meter reads 0 to 1 V dc. - Multimeter set for voltage test (2 V range) - Black and red probes to points 11 and 69 on BoB - Goes to Block 2	_____	_____
3. (Block 2) Meter reads 0 to 1 V dc. - Multimeter set for Voltage Test (2 V range) - Black and red probes to points 11 and 70 on BoB - Goes to Block 5	_____	_____
4. (Block 5) Connect jumper between contacts X and b on 1W104-P2. - Set VMP to OFF - Disconnect 1W104-P2 from GPS J3	_____	_____

	GO	NO GO
5. Continuity found between points 70 and 90 on BoB.	_____	_____
- Multimeter set for ohms test		
6. Decision made to replace GPS body assembly.	_____	_____

* Ask soldier what he would do.

45E

STE-M1 1200 Test

Name:_____ Date:_____

Unit:_____ MOS:_____

Time: Start_____ Finish_____

Evaluator:_____

Soldier given DD Form 2404 "Vehicle master power cannot be turned on from commander's control panel."

* Connect STE-M1 for operation as in Block 9
* Set CB-4 to "OFF" before soldier arrives
* Tell soldier to read out setcom messages

	GO	NO GO
1. Locate procedure in TM 9-2350-255-20-2-2-1, para 8-2.	_____	_____
	Time: _____	

* If soldier takes longer than 10 minutes, give a NO GO and show correct TM page.

Tell soldier to begin at Block 10 and that test equipment is hookde up.

2. (Block 10) Display: Test 1200 Veh-Turret Pwr Cntl.	_____	_____
3. Checks HDB CB-4 & TNB CB-13 are on.	_____	_____
4. Turn ON and OFF Driver's Master Power.	_____	_____
5. Press/hold/release TCP master power switch on/off.	_____	_____
6. Press/hold/release TCP turret power switch on/off.	_____	_____
7. TCP light adjust intensity and check light.	_____	_____
8. Display: No faults found.	_____	_____

* Tell soldier to stop
* Reset test equipment as in Block 9

45E & 45K

FCS-8 Troubleshooting Firing Circuits Subsystem

Name:_____ Date:_____

Unit:_____ MOS:_____

Time: Start_____ Finish_____

Evaluator:_____

Soldier given DD Form 2404 "Main light does not come on when gun select switch is set to main position."

* Multimeter set for continuity test, 200 ohm range, turned off.
* Tell soldier to go directly to alternate troubleshooting procedure.
* Modified TM pages inserted in TM.

	GO	NO GO
1. Locates FCS-8 in TM 9-2350-255-20-2-2-3, para 18-3, Fig. 18-13.	_____	_____
	Time: _____	

* If soldier takes longer than 10 minutes, give a NO GO and show correct TM page.

2. Reads para 18-2 before doing work.	_____	_____

* Tell soldier tank conditions are met.

3. (Block 1) Meter reads 18 to 30 V dc.	_____	_____

- Multimeter set for voltage test (200 V range).
- Black and red probes connected to points 11 and 46 on BoB.
- Set TURRET POWER switch to ON
- Set GUN SELECT switch to MAIN
- Goes to Block 3.

4. (Block 3) Meter reads 18 to 30 V dc.	_____	_____

- Black and red probes connected to points 11 and 42 on Bob.

5. (Block 5) Vehicle master power switch set to OFF.	_____	_____

	GO	NO GO
6. (Block 5, modified) Continuity found between 42 & 43 on BoB. - Disconnects 1W104-P2 from GPS J3. - Connects jumper between contacts u and w on 1W104-P2. - Multimeter set for continuity test.	____	____
7. Decides to replace lower panel assembly.	____	____

45E, 45K, 63E & 63H

STE-M1 Self-Test

Name:_____ Date:_____

Unit:_____ MOS:_____

Time: Start_____ Finish_____

Evaluator:_____

ALL MOSs - STE-M1/FVS SELF TEST

Required TMs: TM 9-2350-255-20-1-2-2, Feb. 84 w/ch. 1-2 (Hull)
TM 9-2350-255-20-2-2-2, May 84 w/ch. 1-2 (Turret)
TM 9-4910-751-14-1, Jan. 85 w/ch. 1 (STE-M1/FVS)

Tools/Supplies required: None

Equipment Condition: STE-M1/FVS Test Set components are connected and ready for vehicle testing. The electrical voltmeter must show in the green band prior to testing. The HPDB is used for STE power source. CIB and VTM power switches on. Cables CX304, CX305 and Plug TA301 near by the test set.

—Tell soldier, "Go directly to the task of Prepare STE for Operations".
LOCATE PROCEDURE IN TM

go' no go

1a. (63E/63H) Locate setup procedure in TM 9-2350-255-20-1-2-2, para. 18-3, page 18-12.

TIME: _____

1b. (45E/45K) Locate setup procedure in TM 9-2350-255-20-2-2-2, para. 15-5, page 15-11.

— Tell 63E and 63H soldiers, "Begin the task on Block 12. The STE is ready for the self test procedure".

— Tell 45E and 45K soldiers, "Begin the task on Block 19. The STE is ready for the self test procedure".

Perform VTM Confidence Test:

2. Step 1: Set TEST SELECT switches on VTM to 6,6. go no go

3. Step 2: Press TEST button on VTM.

4. Step 3: Set TEST SELECT switches on VTM to 9,9.

5. Step 4: Press TEST button on VTM.

-Note- The student should wait for the display to show PASS on the VTM.

6. Step 5: Set TEST SELECT switch on VTM to 0,0.

7. Step 6: Press TEST button on VTM.

50 no 50

Perform SETCOM Self Test:

8. Step 1: Check display on the SETCOM.

-Note- SETCOM display shows: STE/M1 FVS
CLEAR UNIT?

— Tell soldier, "Stop at this point. Find the TM reference to continue with the self test procedure".

9. Step 2: Locate self test procedure in TM 9-4910-751-14-1, para. 4-6, page 4-22, frame 8.

10. Step 3: Press CLEAR key on SETCOM.

-NOTE- The display shows: ENTER TEST
NUMBER:

11. Step 4: Press 6,6,6 on SETCOM.

12. Step 5: Press GO key on SETCOM.

-Note- The display shows: TEST 666
SELF TEST

13. Step 6: Pres GO key on SETCOM.

-Note- The display shows: REVISION DATE
XXXXXX

14. Step 7: Press GO key on SETCOM.

-Note- The display shows: REMOVE CABLES FROM
CIB J1, J2, J3

15. Step 8: Check that no cables are connected to CIB J1, J2, J3.

16. Step 9: Press GO key on SETCOM.

-Note- The display shows: TEST IN PROGRESS
PLEASE WAIT

17. Step 10: Wait for the display to change.

-Note- The display shows: BUTTON TEST
PRESS RETEST

Perform SETCOM Button Test: go no go

18. Step 1: Press RETEST key.

-Note- Student should go through the button test by pressing the correct buttons as directed by the SETCOM.

19. Step 2: Correctly perform button test.

-Note- The display shows: DISPLAY TEST:
0123456789

Perform SETCOM Display Test: go no go

20. Step 1: Press GO key.

-Note- Student should go through the display test by observing the display and by pressing the GO key as directed by the TM.

21. Step 2: Correctly perform display test.

-Note- The display shows: INSPECT CIB
CONNECTORS J1 & J2

Perform CIB Connectors Inspections: go nogo

22. Step 1: Inspect connectors on CIB J1, J2.

—Ask student, "What are you inspecting?". Expected response; J1 and J2 on CIB for missing or broken pins.

23. Step 2: Press GO key.

-Note- The display shows: ARE PINS BENT OR
BROKEN?

24. Step 3: Press NO key.

-Note- The display shows: TEST IN PROGRESS
PLEASE WAIT

25. Step 4: Wait for the display to change.

-Note- The display shows: CONNECT CX304 TO
CIB J1

go no go

Perform CX304 cable test:

26. Step 1: Connect CX304-P2 to CIB J1.

-CAUTION- If the students attempts to force the cable into wrong connection, STOP STUDENT IMMEDIATELY, give student NO-GO for Step 1 . Connect the cable and tell student to continue.

27. Step 2: Press GO key.

-Note- The display shows: CONNECT PLUG TA301
TO CX304

28. Step 3: Connect TA301 to CX304-P1.

-CAUTION- If the student attempts to force the plug into the wrong connection, STOP STUDENT IMMEDIATELY, give student NO-GO for Step 3 . Connect the plug and tell student to continue.

29. Step 4: Press GO key.

-Note- The display shows: TEST IN PROGRESS
PLEASE WAIT

30. Step 5: Wait for display to change.

-Note- The display shows: REMOVE PLUG TA301
FROM CX304

31. Step 6: Remove plug from CX304-P1.

32. Step 7: Press GO key.

-Note- The display shows: TEST IN PROGRESS
PLEASE WAIT

33. Step 8: Wait for the display to change.

-Note- The display shows: CABLE CX304 OK

go nogo

Perform CX305 cable test:

34. Step 1: Press Go key.

-Note- The display shows: CONNECT CX305 TO
CIB J2

35. Step 2: Connect CX305-P2 to CIB J2.

-CAUTION- If the student attempts to force the cable into the wrong connection, STOP STUDENT IMMEDIATELY, give student NO-GO for Step 2. Connect the cable and tell the student to continue.

36. Step 3: Press Go key.

-Note- The display shows: CONNECT PLUG TA301
TO CX305

37. Step 4: Connect Plug to CX305-P1.

-CAUTION- If the student attempts to force the plug into the wrong connection, STOP STUDENT IMMEDIATELY, give student NO-GO for Step 4. Connect the plug and tell the student to continue.

38. Step 5: Press Go key.

-Note- The display show: TEST IN PROGRESS
PLEASE WAIT

39. Step 6: Wait for the display to change.

-Note- The display shows: REMOVE PLUG TA301
FROM CX305

40. Step 7: Remove Plug from CX305-P1.

41. Step 8: Press GO key.

-Note- The display shows: TEST IN PROGRESS
PLEASE WAIT

42. Step 9: Wait for the display to change.

-Note- The display shows: CIB CABLES OK

--Tell soldier, "Stop here in the procedure. Go to your next station".
--PROCTOR-- Turn OFF power switches on CIB and VTM. Disconnect all test cables from CIB (CX304 & CX305). Turn power switches on CIB VTM back on.

45E, 63E & 63H

4. Turret (and Hull) Standard Initial Test Conditions

Name:_____ Date:_____

Unit:_____ MOS:_____

Time: Start_____ Finish_____

Evaluator:_____

* Tell soldier he must perform standard turret (hull) initial test conditions.

*Set following conditions:

1. Turn PANEL LIGHTS to minimum counterclockwise position.
2. Set defroster switch ON.
3. Turn RETICLE to minimum clockwise position.
4. Put Gun Travel Lock Up.
5. Set several TNB Circuit Breakers to OFF.
6. Set TURRET BLOWER switch to ON.
7. Turn Turret lockhandle to unlocked position.
8. Set NIGHT PERISCOPE switch to ON.
9. Set several hull power distribution box circuit breakers to off.
10. Ensure laser guard is on.

	GO	NO GO
1. Locates initial test conditions in TM.	_____	_____
	Time: _____	

* If soldier takes longer than 10 minutes, give a NO GO and show correct TM page.

2. Commander's Station	_____	_____

* Tell soldier he must touch all switches whether or not they are set properly.

- Set TURRET POWER switch to OFF.
- Set VEHICLE MASTER POWER switch to OFF.
- Set PANEL LIGHTS control to maximum clockwise position.

	GO	NO GO
3. Gunner's Station	____	____

- Set DEFROSTER switch to OFF.
- Set PANEL LIGHTS control to maximum clockwise position.
- Set THERMAL MODE switch to OFF.
- Set RETICLE control to maximum counterclockwise position.
- Set PWR switch to OFF.
- Set Laser rangefinder switch to SAFE.
- Install Laserguard.
- Release quick-release pin from roof strut.
- Swing internal gun travel lock down into maingun strut and engage quick-release pin.

4. Loader's Station	____	____

- Set all TNB circuit breaker switches to ON.
- Set TURRET BLOWER switch to OFF.
- Set GUN/TURRET DRIVE switch to POWERED.
- Turn turret lockhandle to LOCKED position.
-

5. Driver's Station	____	____

- Set Vehicle MASTER POWER switch to OFF.
- Set PERSONNEL HEATER switch to LOW and switch to OFF.
- Set NIGHT PERISCOPE switch to OFF.
- Set GAS PARTIC FILTER switch to OFF.
- Set BILGE PUMP switch to OFF.
- Set SMOKE GENERATOR switch to OFF.
- Set LIGHTS switch to OFF.
- Set ENGINE TACTICAL IDLE switch to OFF.
- Set PANEL LIGHTS control to maximum clockwise position.
- Set TANK SELECTOR switch to REAR.
- Make sure 2ND SHOT guard is closed.
- Set all HNB circuit breakers to ON.
- Set all POWER DISTRIBUTION BOX circuit breakers to ON.

63E

FSS-5 Troubleshooting Fuel Supply System

Name:_____ Date:_____

Unit:_____ MOS:_____

Time: Start_____ Finish_____

Evaluator:_____

Soldier given DD Form 2404 "Fuel gage reads zero in any tank selector switch positions."

* Multimeter set for cintinuity, range 200 ohms, turned off.
* Set tank selector switch to front.
* Breakout Box Connected as in Block 7.
* Tell soldier to go directly to alternate troubleshooting procedure without doing set up steps in primary troubleshooting procedure.

	GO	NO GO
1. Locates procedure in TM 9-2350-255-20-1-2-1, Fig 10-5, Page 10-38.	_____	_____
	Time _____	

* If soldier takes longer than 10 minutes, give a NO GO and show correct TM page.

Tell soldier to begin in Block 8

2. (Block 8) Multimeter shows 18 to 30 V dc	_____	_____

- Multimeter set for voltage test (200 V range)
- Black and red test probes to test points 9 and 16
- Set Tank SELECTOR switch to REAR.
- Set VEHICLE MASTER POWER to ON.
- Soldier goes to Block 10

3. (Block 10) Switches VMP to OFF.	_____	_____
4. 2W106-P4 Disconnected from DIP.	_____	_____

	GO	NO GO
5. (Block 11) Multimeter shows continuity.	_____	_____

- Multimeter set for ohms test
- Black and red test probes on test point 9 on BoB and y on P4
- Goes to Block 13

6. (Block 13) Multimeter shows continuity between y and DD on 2W106-P4.	_____	_____

- Disconnect 2W106-P1 from J12 on HNB.
- Connects jumpers between contacts H and X on 2W106-P1.
- Multimeter set for continuity test

7. Decision made to replace Hull Networks Box.	_____	_____

- Connects 2W106-P1

* Ask soldier what he would do.

63E

PBS-3 Troubleshooting Parking Brake System

Name:_____ Date:_____

Unit:_____ MOS:_____

Time: Start_____ Finish_____

Evaluator:_____

Soldier given DD Form 2404 "Parking/service brake light does not come on when service brake is pressed for two minutes or more."

* Multimeter set for continuity test, 200 ohms, turned off.

	GO	NO GO
1. Locates procedure in TM 9-2350-255-20-1-2-1, Fig 13-5, page 13-34.	_____	_____
	Time: _____	

* If soldier takes longer than 10 minutes, give a NO GO and show correct TM page.

* Tell soldier to begin at Block 7

2. (Block 7) Connects Breakout Box to transmission.	_____	_____

- Connects cable 1-P1 to BoB
- Connects adapter 3-P1 to 3W104-TJ1 on transmission
- Connect cable to adapter

3. (Block 9) Multimeter shows 18 to 30 Vdc.	_____	_____

- Releases parking brake.
- Connects black and red test probes to points 1 and 9 on BoB
- Multimeter set for voltage test (200 V range)
- Sets VMP to ON.

4. (Block 10) Set VMP to OFF.	_____	_____
5. Light comes on after 2 minutes.	_____	_____

- Connect jumpers between point 1 and 9 on BOB.
- Set VMP to ON.

6. Decision is made to notify support maintenance.	_____	_____

* Ask soldier what he would do.

63E & 63H

STE-M1 1100 TEST

Name:_____ Date:_____

Unit:_____ MOS:_____

Time: Start_____ Finish_____

Evaluator:_____

Soldier given DD Form 2404, "Tank will not move in forward or reverse ranges."

* Prepare STE for operation as in Block 21
* Set CB 10 to "OFF" before soldier arrives
* Tell soldier to read out setcom messages

	GO	NO GO
1. Locates procedure in TM 9-2350-255-20-1-2-1, Figure 11-3, Page 11-7.	____	____
	Time: ____	

* If soldier takes longer than 10 minutes, give a NO GO and show correct TM page.

* Tell soldier to begin at Block 23 and that STE-M1 is hooked up, and that all cable connections are already made.

2. Enters 1100 on SETCOM.	____	____
3. Follows display messages.	____	____
4. Follows display: Master power be sure it is on.	____	____

* Ask what he is doing.

5. Follows display: HNB-CB7- Be sure it is off.	____	____

* Ask what he is doing.

6. Display: See -20 Manual (1550 Test Begins)	____	____

*Ask soldier what he would do. (SHOULD DECIDE TO)

7. Run 1550 test.	____	____

* Tell soldier to stop
* Reset equipment as in Block 21 - Stop, Clear

Troubleshooting Turret Networks Box-ATP

Name:_____ Date:_____

Unit:_____ MOS:_____

Time: Start_____ Finish_____

Evaluator:_____

Soldier given DD Form 2404 "Turret Networks Box faulty - main gun does not fire from elevation hand pump. Use Alternate Troubleshooting Procedure."

- TNB on bench with front plate assembly removed.

* Set multimeter for voltage test (20 V range), turned off

	GO	NO GO
1. Locates procedure in TM 9-2350-255-34-2-1, Figure 13-43.	_____	_____
	Time:	_____

* If soldier takes longer than 10 minutes, give a NO GO and show correct TM page.

* Tell soldier to begin at Block 4 and that Front Plate Assembly has been removed

- Multimeter set for continuity

2. (Block 4) Continuity found between A1J1-5 and A3J1-12.	_____	_____
3. (Block 6) Continuity found between A3J1-14 and A4J1-28.	_____	_____
4. (Block 8) Continuity found between A1J1-6 and A2J1-27.	_____	_____
5. (Block 10) Resistance of 1200 to 1400 Ohms found between A1P1-5 and A1P1-6 on circuit card A1.	_____	_____
6. (Block 12) Resistance of 220 to 260 Ohms found between A1P1-6 and A1P2-3.	_____	_____

7. (Block 14) Resistance of less than 50 Ohms found between A3P1-12(+) and A3P1-14(-). ____ ____

   - Install circuit assembly A1
   - Remove circuit assembly A3

8. (Block 16) Resistance of less than 100,000 Ohms found between A3P1-14 and A3P1-12. ____ ____

   - Multimeter set for 200K Ohms

9. Decision is made to replace card assembly A3 ____ ____

* Ask soldier what he would do

45K

Troubleshooting CWS-PCU with DSESTS

Name:_____ Date:_____

Unit:_____ MOS:_____

Time: Start_____ Finish_____

Evaluator:_____

Soldier given DD Form 2404 "Commander's weapon station power control unit found faulty during vehicle troubleshooting."

- CWS-PCU on work bench

* DSESTS hooked up as in Block 2

	GO	NO GO
1. Locates procedure in TM 9-2350-255-34-2-1, Fig 9-3.	_____	_____
	Time: _____	

* If soldier takes longer than 10 minutes, give a NO GO and show correct TM page.

* Tell soldier to begin in Block 2 in Fig. 9-4 and that DSESTS is hooked up and turned on.

2. (Block 2) Selects CWS test from menu.	_____	_____
3. (Block 3) Connects ground clip.	_____	_____
4. (Block 4) Connects cable CWS-W3 to DSESTS and CWS.	_____	_____
5. (Block 5) Follows test set display.	_____	_____
- Adjusts power supply voltage		
7. Identifies faulty _____	_____	_____

* Ask soldier what is faulty

DSESTS SELF TEST PROCEDURE

NAME:_____ DATE:_____

UNIT:_____ MOS:_____

TIME: START_____ FINISH_____

EVALUATOR:_____

Soldier told he must perform DSESTS self test procedure.

Equipment conditions:

- DSESTS with power cable connected to power supply.
- DSESTS display reads: SELF TEST ?

	GO	NO GO
1. Locates procedure in TM 9-4931-586-12, Vol I, page 4-12	_____	_____
	Time:	_____

* If soldier takes longer than 10 minutes, give a NO GO and show correct TM page. "Tell soldier to start at FRAME 7"

PERFORM SELF TEST

2. Press "yes" pushbutton for display: SELF TEST?	_____	_____
3. Press "yes" pushbutton for display: DISCONNECT ALL TEST CABLES.		
4. Press "no" pushbutton for display: PRESS NO		
5. Press "stop" pushbutton for display: PRESS STOP		
6. Press "yes" pushbutton for display: ARE ALL LAMPS ON?		

PERFORM DISPLAY TEST

1. Press "yes" pushbutton for display: ALL SEGMENTS ON LINE 1 ?	_____	_____
2. Press "yes" pushbutton for display: ALL SEGMENTS ON LINE 2 ?		
3. Press "yes" pushbutton for display: ALL SEGMENTS ON LINE 3 ?		

* Tell soldier "YOU WILL NOT PERFORM FUNCTIONAL SELF TEST" at display: FUNCTIONAL SELF TEST?

PERFORM MODULE / CABLE TEST

1. Press "no" pushbutton for display: FUNCTIONAL SELF TEST? _____ _____

2. Press "yes" pushbutton for display: DISCONNECT ALL TEST CABLES

3. Connect memory W-60 cable to M-1 MEMORY MODULE.

4. Press "yes" pushbutton after connect W-60 cable.

   - Tell soldier "STOP HERE," When MENU is DISPLAYED

* Disconnect memory cable and run DSESTS until display shows: SELF TEST ?

Remove and Install Left Brake Pack

Name:_____ Date:_____

Unit:_____ MOS:_____

Time: Start_____ Finish_____

Evaluator:_____

Soldier is given DA Form 2404, written "Brakes do not stop or hold vehicle. Suspected problem in the left brake pack".

General Note: Ask questions pertaining to inspections AFTER the soldier has started the inspection on his own.

Tools/Supplies required: Doggy bowls, flat tip screwdriver, petrolatum, clean rags.

Equipment Condition: Transmission on wooden blocks and left mechanical housing removed.

--Tell soldier, "Go directly to the task for removing the left brake pack".

1. Locate maintenance procedure in TM 9-2520-276-34, para. 1-37, Task 1, page 1-347. GO NO GO
   * IF SOLDIER TAKES 10 MINUTES, GIVE NO GO AND SHOW TM PAGE
   -- Tell soldier, "Begin the Task on page 1-347. The left mechanical housing is removed. Solvent will not be used for cleaning parts". TIME: _____

(Page 1-347)

2. Step 1: Remove/inspect piston return clutch. GO NO GO
   -- Ask soldier, "What are you inspecting the disk for?"
   Expected response: For crack, bends or breaks.
   Soldier sits disk on clean work surface.

3. Step 2: Remove/inspect 12 springs, spring guide pins. Soldier places pins, springs on clean work surface or in doggy bowls.

4. Step 3: Inspect all springs.
   -- Ask soldier, "What are you inspecting the springs for?"
   Expected response: For cracks, bends or stretched coils.

   Inspect all spring guide pins.
   -- Ask soldier, "What are you inspecting the pins for?"
   Expected response: For cracks, bends or breaks.

(Page 1-349)

5. Step 1: Remove 27 clutch disks in order as removed, places disks on clean work surface or on rags. GO NO GO

6. Step 2: Remove piston return clutch disk, place disk on clean work surface or on other disks. Remove remaining pins.

7. Step 3: Inspect disks and pins.
-- Ask soldier, "What are you inspecting the disks and pins for?"
Expected response: For cracks, bends or breaks.

8. Step 4: Remove bronze thrust washer bearing.
-- Ask soldier, "What are you inspecting the washer for?"
Expected response: For cracks, bends or breaks.

-- Tell soldier, "Stop at this point. Find the TM reference to install the parts you have just removed from the transmission and install the parts".

9. Locate maintenance procedure in TM 9-2520-276-34, para. 1-37, task 2, page 1-351. GO NO GO

(Page 1-352)
10. Step 1: Install 14 headless straight pins.

-- Tell soldier, "Now, go to Step 1 on the next page and begin there. The hub, gears and washer were not removed".

(Page 1-353)
11. Step 1: Spread petrolatum on bronze washer, put washer on spur gear. GO NO GO

12. Step 2: Line up plate with pins, install plate.

-- Tell soldier, "You will not soak the disks in oil, go on with the task".

13. Step 3: Install 1 internal-splined disk with proper side in.

14. Step 4: Line up and install 1 external-tanged disk, proper side out, all the way in the housing.

15. Step 5: Line up and install all disks, making sure they are in order.

(Page 1-354)
16. Step 1: Install 12 guide pins. GO NO GO

17. Step 2: Install 12 springs on pins.

18. Step 3: Install clutch disk, making sure it lines up with pins.

19. Tell soldier, "Stop here. You are finished with the task. Clean up the work area and go to the next station".

63H

Inspect Engine

Name: _____ Date: _____

Unit: _____ MOS: _____

Time: Start: _____ Finish: _____

Evaluator: _____

Equipment/ supplies: Flashlight, TM 9-2835-255-34 opened to page 8-1

*Soldier receives DD Form 2204 with symptom: "Engine Faulty"
*Tell soldier to begin the inspection procedure on Block 5
*Tell soldier to work on the cutaway engine trainer.
*Tell soldier to describe the entire inspection procedure as he goes through the task.
*Do NOT tell soldier where to find the parts/components for inspection.

	GO	NO GO
1. Block 5 Inspect LP Compressor	_____	_____
2. Block 7 Inspect Collector (Outside)	_____	_____
3. Block 8.1 Inspect Collector (Inside)	_____	_____
4. Block 9 Inspect First Gas Producer Blades	_____	_____

1. Block 5 Inspect LP Compressor

Starts inspection in Block 5
Rotates LP compressor with finger
*Ask soldier "What are you inspecting the compressor for?"
Response: Rubs or binds in rotation

2. Block 7 Inspect Collector (Outside)

Inspect compressor for burnt through holes
*Ask soldier "What are you inspecting the collector for?"
Response: for burnt throgh holes and cracks

Inpsects cooling holes on collector
Response: for cracks longer than 1/8 inch

Inspects stiffener ring for cracks
Response: for cracks longer than 1/8 inch

3. Block 8.1 Inspect Collector (Inside)

Inspects inside of collector
*Ask soldier "What are you inspecting the collector for?"
Response: for burnt through holes

Inspects weld bead
Response: for cracks longer than 3/4 inch

4. Block 9 Inspect First Gas Producer Blades

Inspects blades
*Ask soldier "What are you inspecting the blades for?"
Response: for bent or broken blades, metal deposits

*If soldier says blades are bad, tell soldier to go to Block 11 (as if the blades were good)

	GO	NO GO
5. Inspect Second Gas Producer Nozzle Vanes		
Inspects nozzle vanes *Ask soldier "What are you inspecting the vanes for?" *Response: burnt, worn, or out of shpae vanes		

*Tell soldier to stop here.

Troubleshooting Transmission Harness/Switch

Name:_____ Date:_____

Unit_____ MOS:_____

Time: Start_____ Finish_____

Evaluator:_____

Soldier given DD Form 2404 "Parking/service brake does not come on when service brake is pressed for two minutes or more."

- Transmission on blocks
- CDP actuator removed
- Remove 22 of 26 access cover bolts
- Two guide pins installed

* Multimeter set for voltage test (20 V range), turned off.

	GO	NO GO
1. Locate procedure in TM 9-2350-276-34, Fig. 2-3	_____	_____
	Time:	_____

* If soldier takes longer than 10 minutes, give a NO GO and show correct TM page.

2. (Block 1) Remove access cover.	_____	_____
Disconnects control branched wiring harness.	_____	_____

- Refers to Vol II, Para. 1-32
- Remove access cover Vol II, Para. 1-25

3. (Block 2) Continuity found between contact F on control harness connector and pin F on transmission main connector.	_____	_____

- Multimeter set for continuity.

* Ask soldier what he would do next? (Go to block 3)

End of task - prepare station for next soldier.

APPENDIX B

DL FORM 2404 USED IN HANDS-ON TEST

EQUIPMENT INSPECTION AND MAINTENANCE WORKSHEET

For use of this form, see TM 38-750; the proponent agency is the Office of the Deputy Chief of Staff for Logistics.

1. ORGANIZATION	2. NOMENCLATURE AND MODEL						
Co "A" 3/61 ARMOR	TNK, CBT FT-M-1						
3. REGISTRATION/SERIAL/NSN	4a. MILES	b. HOURS	c. ROUNDS FIRED	d. HOT STARTS	5. DATE	6. TYPE INSPECTION	
					16 MAY 87	B/D/A	

7. APPLICABLE REFERENCE			
TM NUMBER	TM DATE	TM NUMBER	TM DATE
9-2350-255-10-3		9-2350-276-34	

COLUMN a — Enter TM item number.

COLUMN b — Enter the applicable condition status symbol.

COLUMN c — Enter deficiencies and shortcomings.

COLUMN d — Show corrective action for deficiency or shortcoming listed in Column c.

COLUMN e — Individual ascertaining completed corrective action initial in this column.

STATUS SYMBOLS

"X"—Indicates a deficiency in the equipment that places it in an inoperable status.

CIRCLED "X"—Indicates a deficiency, however, the equipment may be operated under specific limitations as directed by higher authority or as prescribed locally, until corrective action can be accomplished.

HORIZONTAL DASH "(-)"—Indicates that a required inspection, component replacement, maintenance operation check, or test flight is due but has not been accomplished, or an overdue MWO has not been accomplished.

DIAGONAL "(/)"—Indicates a materiel defect other than a deficiency which must be corrected to increase efficiency or to make the item completely serviceable.

LAST NAME INITIAL IN BLACK, BLUE-BLACK INK, OR PENCIL-Indicates that a completely satisfactory condition exists.

FOR AIRCRAFT-Status symbols will be recorded in red.

ALL INSPECTIONS AND EQUIPMENT CONDITIONS RECORDED ON THIS FORM HAVE BEEN DETERMINED IN ACCORDANCE WITH DIAGNOSTIC PROCEDURES AND STANDARDS IN THE TM CITED HEREON.

8a. SIGNATURE (Person(s) performing inspection)	8b. TIME	9a. SIGNATURE (Maintenance Supervisor)	9b. TIME	10. MANHOURS REQUIRED
Scott E Mahn				

TM ITEM NO. a	STATUS b	DEFICIENCIES AND SHORTCOMINGS c	CORRECTIVE ACTION d	INITIAL WHEN CORRECTED e
1	X	PARKING/SERVICE		
		BRAKE LIGHT DOES		
		NOT COME ON WHEN		
		SERVICE BRAKE IS		
		PRESSED FOR TWO		
		MINUTES OR MORE		

DA FORM 1 APR 79 2404 Replaces edition of 1 Jan 64, which will be used

APPENDIX C

63H PAPER AND PENCIL TEST

MTP-RC TRIAL FIELDING

PRE/POST TEST FOR 63H, TRACK VEHICLE REPAIRER

Name: _____

Date: _____

Location: _____

Part I Score: _____

Part II Score: _____

MTP-R6 TRIAL FIELDING

PART I

Directions: Part I of this test will have questions relating to the Principles of Operations, general M1 operations, STE-M1/FVS test set, Multimeter, Breakout Box Tool Kit and Technical Manuals.

Unless you are told otherwise, mark the correct answer on the Answer Sheet.

Questions 1 through 10 are related to the Breakout Box Tool Kit.

1. Which jack is used for connecting the breakout box to a line replaceable unit (LRU)?
   1. Connecting jack
   2. Test jack
   3. Utility jack
   4. Harness jack

2. What is the purpose of the Adaptors in the Breakout Box Tool Kit?
   1. To connect the breakout box to different LRUs
   2. To provide connection for the multimeter
   3. To provide connections of different harnesses
   4. To connect the harness to different LRUs

3. What is the purpose of the Breakout Box Tool Kit?
   1. To allow testing of the internal circuits
   2. To jump start the tank
   3. To power up the circuit
   4. To test the alignment

4. Which of the following is NOT a component of the Breakout Box Tool Kit?
   1. Test probes
   2. Adaptors
   3. Cable 1
   4. Harness

5. When connecting the breakout box to a LRU, you must first:
   1. Connect the adaptor to the LRU
   2. Connect the adaptor to the cable 1
   3. Connect the adaptor to the breakout box
   4. Connect the adaptor to the harness

6. The Breakout Box Tool Kit is used to test:
   1. Tank operations
   2. Engine performance
   3. Voltage, resistance and continuity
   4. Alignment

7. How many cable connector(s) are on the breakout box?
   1. 1
   2. 2
   3. 3
   4. None

8. Where is the cable 1 connected when the breakout box is used for testing?
   1. Between the breakout box assembly and the adaptor
   2. Between the breakout box assembly and the multimeter
   3. Between the adaptor and the component being tested
   4. Between the adaptor and the harness

9. ON THE DRAWING OF THE BREAKOUT BOX BELOW, circle the test points 12 and 86.

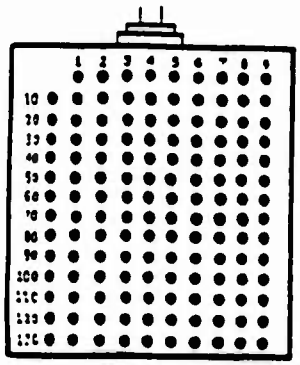

10. ON THE DRAWING OF THE BREAKOUT BOX BELOW, circle the test points 45 and 98.

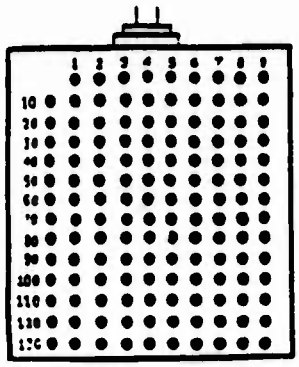

Questions 11 through 20 are related to the STE-M1/FVS test set.

11. Which component provides the operator with commands and questions during vehicle testing?
    1. Vehicle Test Meter
    2. Set Communicator
    3. Controllable Interface Box
    4. Transducer

12. Which of the following components could be used to provide power to the STE-M1/FVS test set?
    1. Hull Power Distribution Box and Hull Networks Box
    2. Turret Networks Box and Hull Networks Box
    3. Hull Power Distribution Box and Turret Networks Box
    4. Driver's Master Panel and Turret Networks box

13. What numbers must be pressed on the Set Communicator to run the self-test?
    1. 9,9,9
    2. 0,0,0
    3. 6,6,6
    4. 0,6,9

14. What does a flashing message on the Set Communicator mean?
    1. Something is wrong with the test set
    2. The operator must hit the "stop" button
    3. Wait for the next instruction
    4. The operator must hit the "Retest" button

15. What does a "No Faults Found" message on the Set Communicator mean?
    1. An "all systems go" message at the end of the test
    2. A successful self test message
    3. A pass condition displayed on the Vehicle Test Meter
    4. A successful Vehicle Test Meter self test message

16. What must be pressed on the Set Communicator when you are ready to perform a test with the STE-M1/FVS test set?
    1. "Clear" button
    2. Test numbers
    3. "TEST" button
    4. "Retest" button

17. Which test set component is the Set Communicator connected to?
   1. Controllable Interface Box
   2. Vehicle Test Meter
   3. Transducer
   4. Adaptor

18. Which test set component is connected to the STE-M1/FVS test set power source?
   1. Controllable Interface Box
   2. Set Communicator
   3. Vehicle Test Meter
   4. Transducer

19. What must be done first when you are stowing the STE-M1/FVS test set?
   1. Turn off all power switches
   2. Disconnect all cables and adaptors
   3. Reconnect all harnesses
   4. Set vehicle master power to "ON"

20. ON THE DRAWING OF THE STE-M1/FVS COMPONENTS BELOW, circle the Controllable Interface Box.

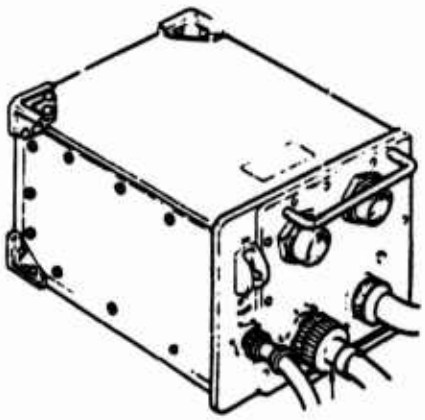

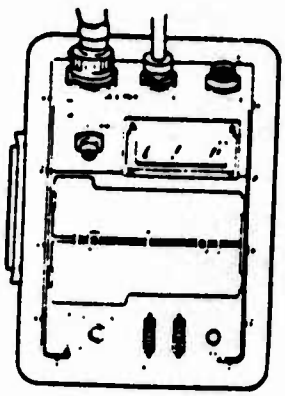

Questions 21 through 30 are related to the Simpson Digital Multimeter.

21-22. ON THE DRAWING OF THE MULTIMETER BELOW, circle the correct range switch and function switch if expected voltage range is between 24 to 30 Vdc.

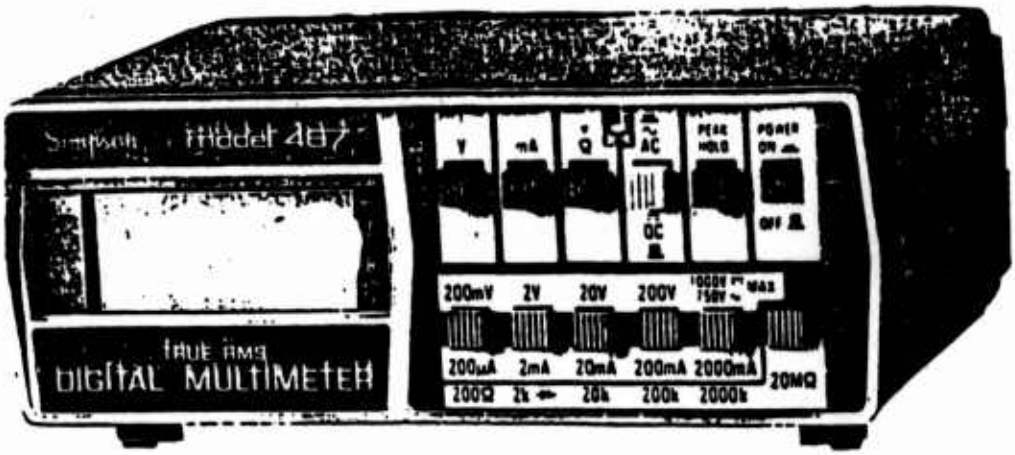

23-24. ON THE DRAWING OF THE MULTIMETER BELOW, circle the correct range switch and function switch if the expected range is 220 ohms.

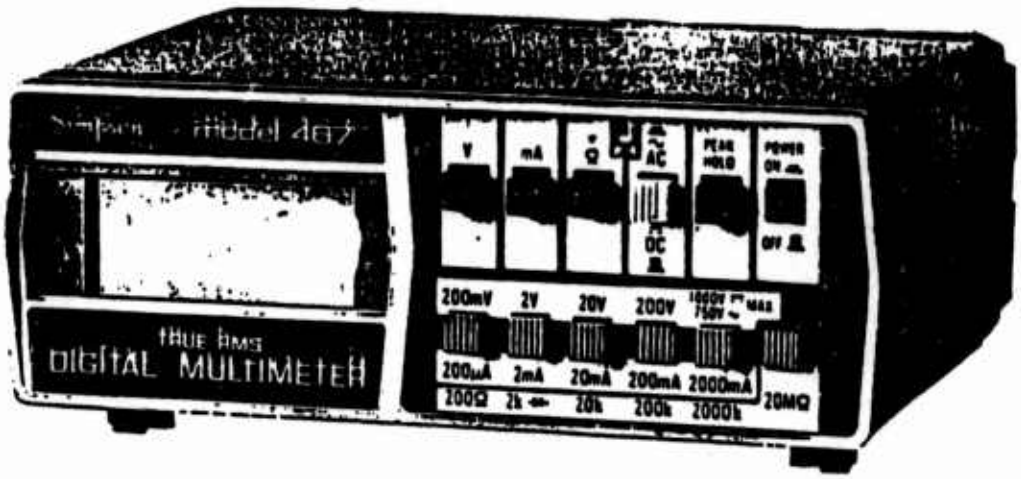

25. What does a reading of 00.0 indicate on the multimeter if the multimeter is set up for a continuity test?
   a. No continuity
   b. Continuity
   c. 00.0 amps.
   d. 00.0 volts

26. What is the next step to perform after setting the multimeter for continuity tests?
   a. Take zero reading
   b. Check test points
   c. Connect test leads to test points
   d. Connect test leads to breakout box

27. What range switch on the multimeter must you depress if the expected resistance reading is 1,800 ohms?
   a. 200 ohms
   b. 2k ohms
   c. 20k ohms
   d. 200k ohms

28. The black test lead will always be on which multimeter connection?
   a. V-
   b. mA
   c. COM
   d. mV

29. What does a reading of 19.02 on the multimeter indicate if the multimeter is set up for resistance and the 20K ohms range switch is depressed?
   a. 1.902 ohms
   b. 19.02 ohms
   c. 1,902 ohms
   d. 19,020 ohms

30. What does a reading of 1 . on the multimeter indicate if the multimeter is set up a continuity test?
   a. 1 ohms
   b. No continuity
   c. Continuity
   d. 1 volt

Questions 31 through 40 are related to the M1 Technical Manuals.

31. What TM will you use to perform troubleshooting and maintenance on the M1 engine?
    1. TM 9-2350-255-34
    2. TM 9-2835-255-34
    3. TM 9-2520-276-34
    4. TM 9-2835-255-34P

32. What TM will you use to perform troubleshooting and maintenance on the M1 transmission?
    1. TM 9-2350-255-34
    2. TM 9-2835-255-34
    3. TM 9-2520-276-34
    4. TM 9-2350-255-34-2-1

33. What type of manuals are the M1 Technical Manuals?
    1. Skill Performance Aids
    2. Technical Outline Manuals
    3. Conceptual Skill Aids
    4. Skill Performance Manuals

34. Which of the following is NOT an Organizational Support Maintenance TM?
    1. TM 9-2350-255-20-1-2-1
    2. TM 9-2835-255-34
    3. TM 9-2350-255-MAC
    4. TM 9-2350-255-L

35. Which of the following is NOT a Direct/General Support Maintenance TM?
    1. TM 9-2350-255-20-1-2-1
    2. TM 9-2350-255-34-1-2-1
    3. TM 9-2350-255-MAC
    4. TM 9-2350-255-L

36. Which manual will you use to find out what type oil is used in the engine?
    1. TM 9-2350-255-CL
    2. TM 9-2350-255-MAC
    3. LO 9-2350-255-12
    4. TM 9-2835-255-34

37. Which TM will you use to operate the M1 tank?
  1. TM 9-2350-255-MAC
  2. TM 9-2350-255-10-2
  3. TM 9-2350-255-20-1-2-1
  4. TM 9-2350-255-HR

38. Which TM will you use to perform Organizational Maintenance on the M1 tank?
  1. TM 9-2350-255-34-1-2-1
  2. TM 9-2350-255-20-1-3-1
  3. TM 9-2350-255-34-2-1
  4. TM 9-2350-255-34-1-2-1

39. Which TM will you use to look up the list of all applicable publications for the M1 tank?
  1. TM 9-2350-255-HR
  2. TM 9-2350-255-L
  3. TM 9-2350-255-CL
  4. TM 9-2350-255-MAC

40. Where are the warnings listed in the manual?
  1. Inside the front cover
  2. In the Appendix
  3. At the beginning of each task
  4. At the end of each task

Questions 41 through 50 are related to M1 tank operations and components.

41. The vehicle master power switch is located on which component?
  1. Driver's Master Panel
  2. Driver's Instrument Panel
  3. Driver's Alert Panel
  4. Hull Networks Box

42. In what position must the Shift Selector Assembly be set for starting the engine?
  1. S (Start)
  2. D (Drive)
  3. N (Neutral)
  4. R (Reverse)

43. Which line replaceable unit contain the "NATO" slave receptacle?
  1. Hull Networks Box
  2. Hull Power Distribution Box
  3. Driver's Master Panel
  4. Driver's Instrument Panel

44. Which component provides the throttle signal to the Electronics Control Unit?
   1. Rotary Variable Differential Transformer
   2. Driver's Master Panel
   3. Shift Selector Assembly
   4. Driver's Instrument Panel

45. Which component provides interface between the electrical and hydraulic systems of the hull and turret?
   1. Turret Networks Box
   2. Slipring
   3. Hydraulic Pump
   4. Hull Networks Box

46. ON THE DRAWING BELOW, circle the Driver's Master Panel.

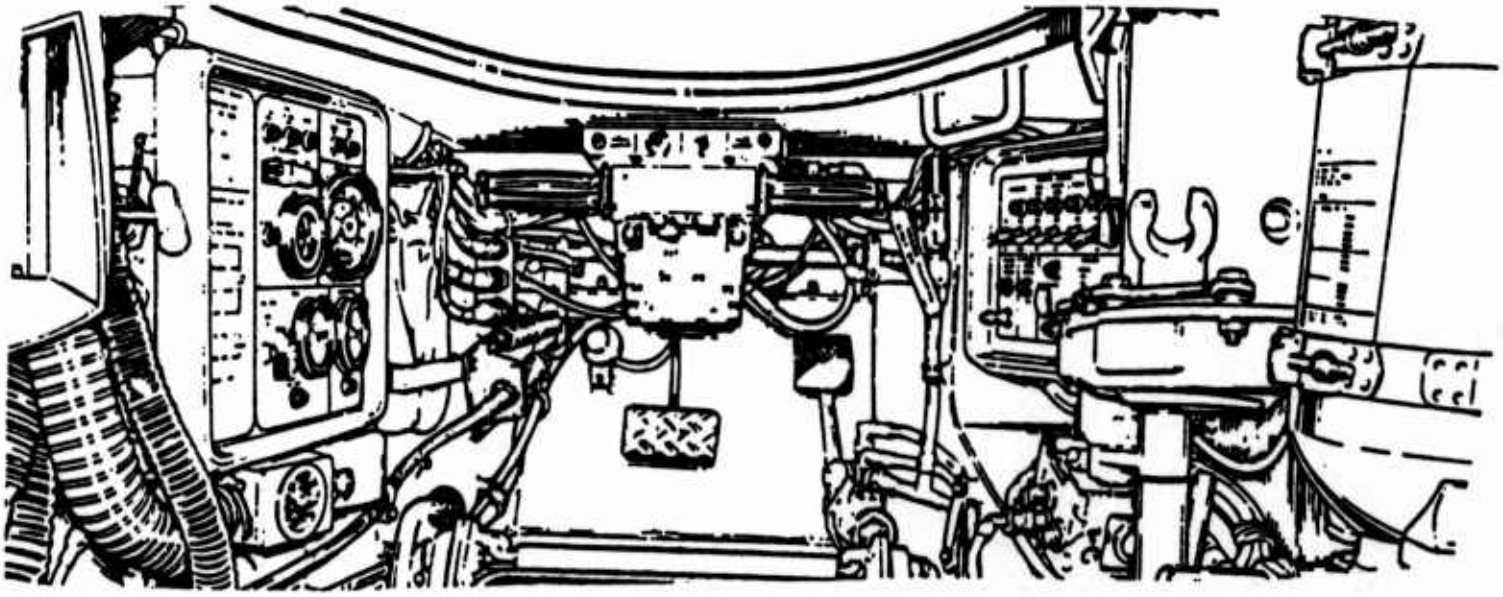

47. ON THE DRAWING BELOW, circle the Driver's Instrument Panel.

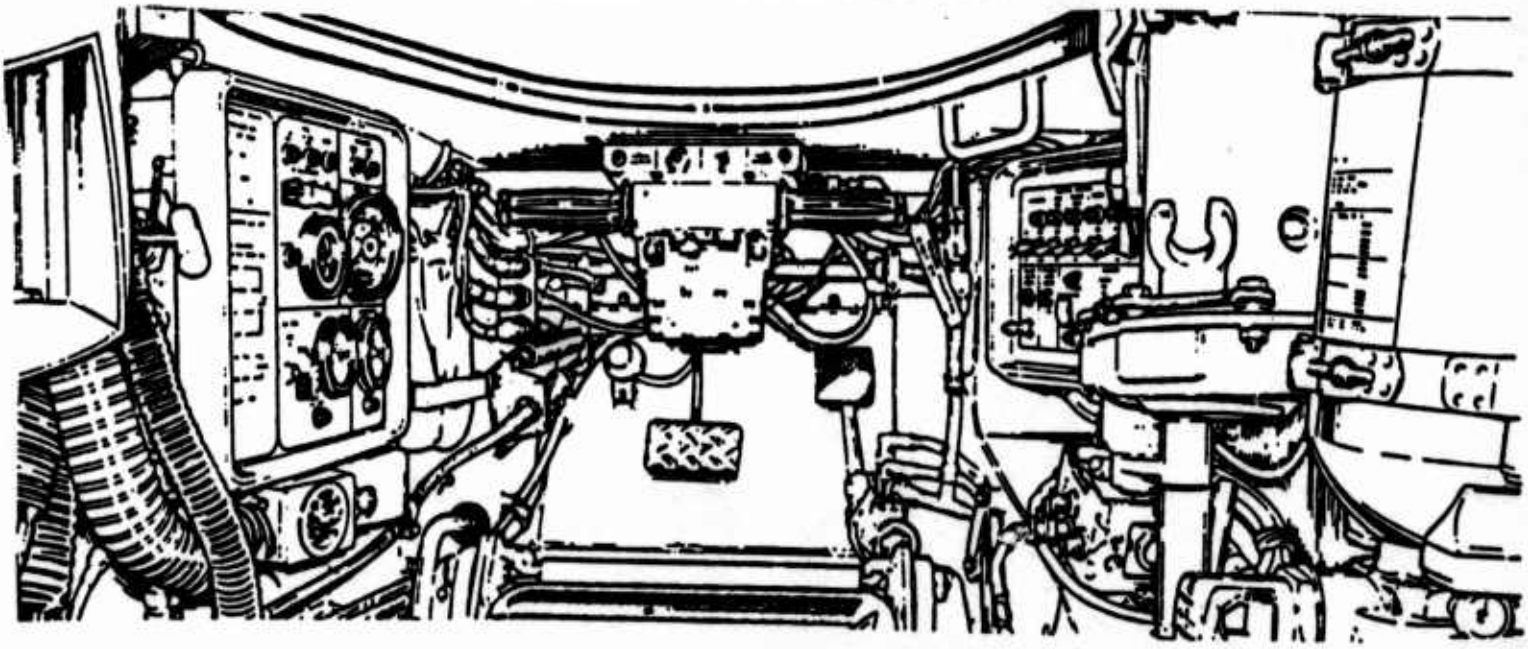

48. ON THE DRAWING BELOW, circle the Service Brake Pedal.

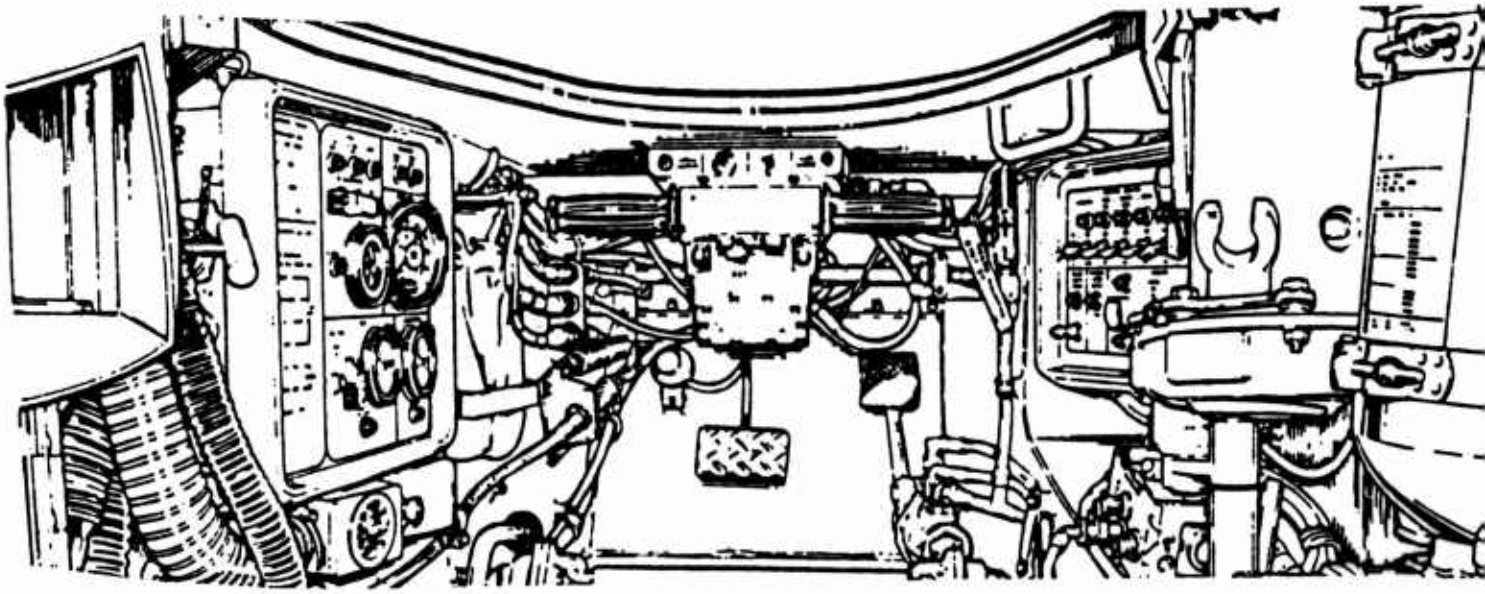

49. ON THE DRAWING BELOW, circle the Starter.

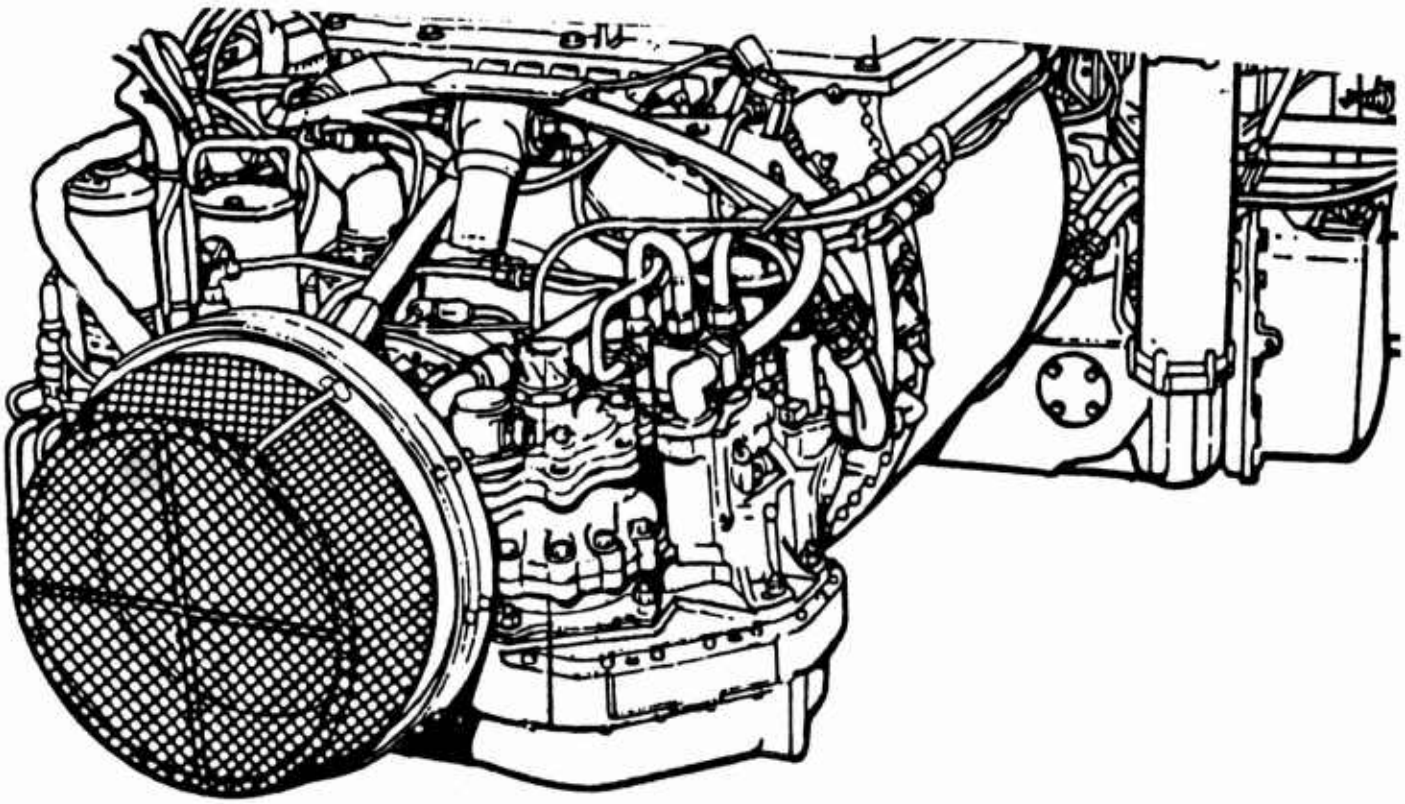

50. ON THE DRAWING BELOW, circle the Transmission Main Electrical Connector.

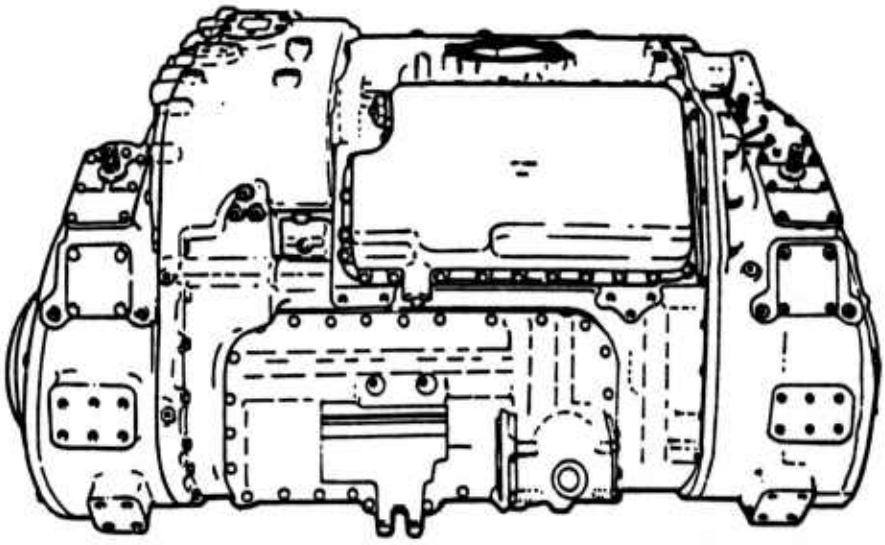

MTP-RC TRANSFER EVALUATION

PART II

Directions: Part II of this test will have questions relating to specific procedures for Troubleshooting, Maintenance and Safety for the M1 tank.

Unless you are told otherwise, mark the correct answer on the Answer Sheet.

Name: _____

Social Security No: _____

Date: _____

Location: _____

Score: _____

Questions 51 through 60 are related to the M1 tank engine.

51. Which engine module provides the mountings for the Starter, Main Hydraulic Pump, Electro-Mechanical Fuel Unit and the Oil Pump?
   1. Forward Engine Module
   2. Rear Engine Module
   3. Accessory Gearbox Module
   4. Reduction Gearbox Submodule

52. Which engine module provides the compression for the engine?
   1. Accessory Gearbox Module
   2. Forward Engine Module
   3. Rear Engine Module
   4. Reduction Gearbox Submodule

53. Which engine module provides the means for exhaust gases to exit the engine?
   1. Accessory Gearbox Module
   2. Forward Engine Module
   3. Rear Engine Module
   4. Reduction Gearbox Submodule

54. What type engine is used in the M1 tank?
   1. Turbine
   2. Jet
   3. Gasoline
   4. Turboprop

55. What component of the engine preheats the incoming air?
   1. Forward Engine Module
   2. Recuperator
   3. Combustor
   4. Scroll

56. What component regulates the air entering the engine?
   1. Low Pressure Compressors
   2. Inlet Guide Vanes
   3. Power Turbine Stators
   4. High Pressure Compressors

57. What component of the engine allows excess air pressure to escape into the rear engine module?
   1. Air Bleed Valve
   2. Scroll
   3. Recuperator
   4. Combustor

58. ON THE DRAWING OF THE ENGINE BELOW, circle the Power Turbines.

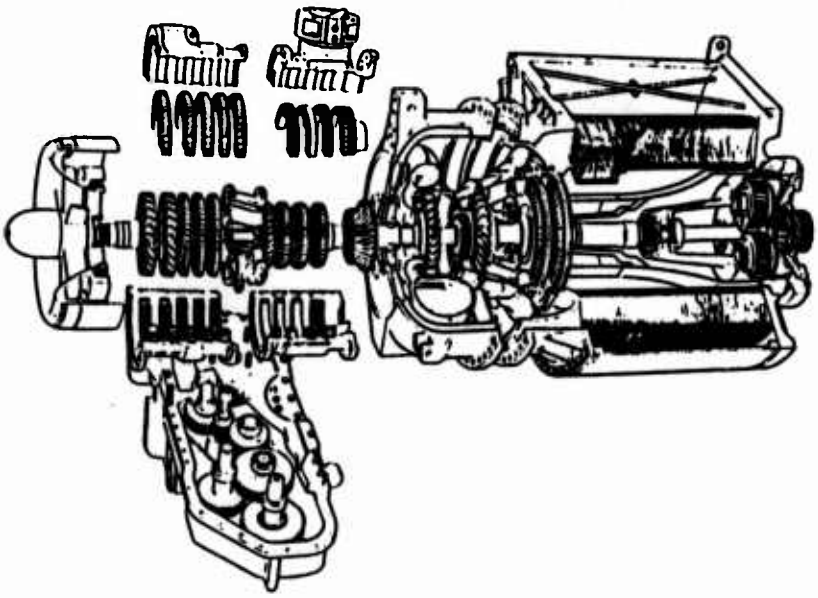

59. ON THE DRAWING OF THE ENGINE BELOW, circle the Reduction Gearbox Subassembly.

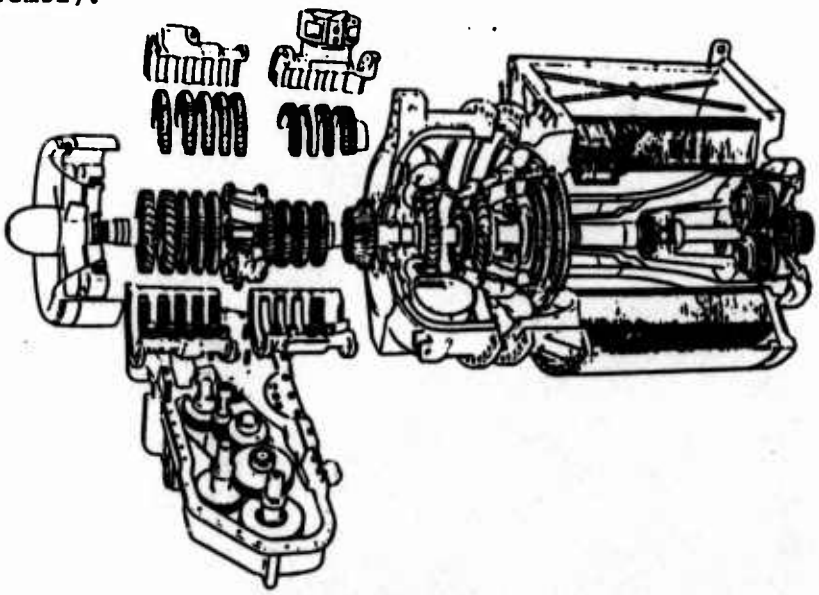

60. ON THE DRAWING OF THE ENGINE BELOW, circle the High Pressure Compressors.

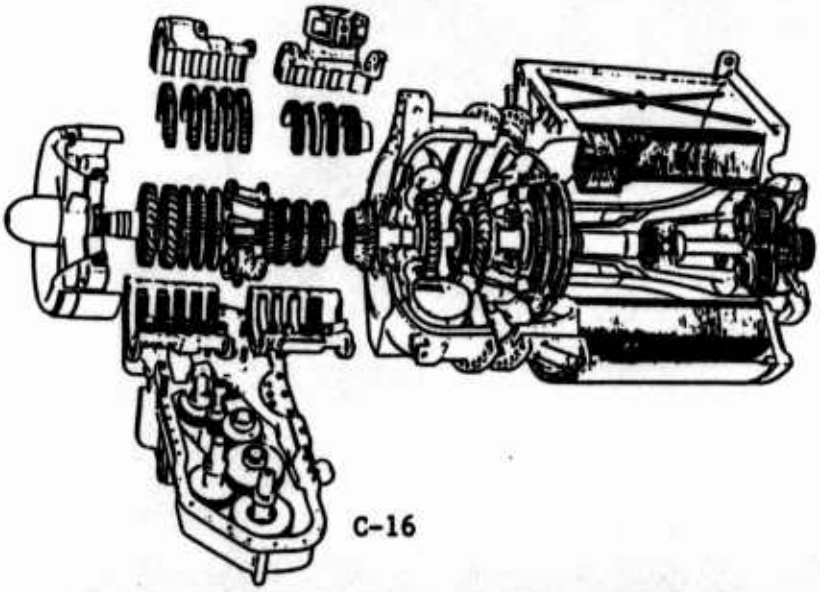

Questions 61 through 70 are related to the M1 transmission.

61. The M1 transmission has how many module(s)?
  1. 1
  2. 2
  3. 3
  4. 4

62. What type of transmission is used in the M1 tank?
  1. Hydromatic
  2. Torquematic
  3. Cross-drive
  4. Straight-drive

63. Which transmission module houses the torque converter?
  1. Right Output Module
  2. Center Module
  3. Input Module
  4. Left Output Module

64. Which transmission module houses the clutches?
  1. Center Module
  2. Input Module
  3. Right Output Module
  4. Left Output Module

65. How many gear ranges does the transmission have in LOW (L)?
  1. 2
  2. 3
  3. 4
  4. 5

66. How many gear ranges does the transmission have in REVERSE (R)?
  1. 1
  2. 2
  3. 3
  4. 4

67. What component controls the operating ranges of the transmission?
  1. Commander's Control Panel
  2. Driver's Master Panel
  3. Shift Selector Assembly
  4. Driver's Instrument Panel

68. What are the three main functions of the transmission?
   1. Driving, Firing and Steering
   2. Shifting, Steering and Braking
   3. Braking, Generating and Driving
   4. Braking, Generating and Firing

69. ON THE DRAWING OF THE TRANSMISSION BELOW, circle the Input Module.

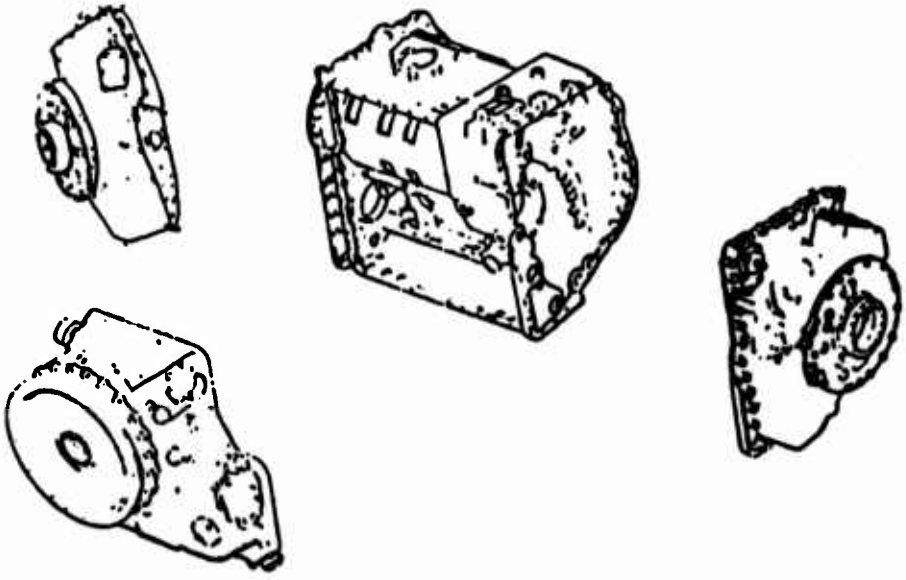

70. ON THE DRAWING OF THE TRANSMISSION BELOW, circle the Right Output Module.

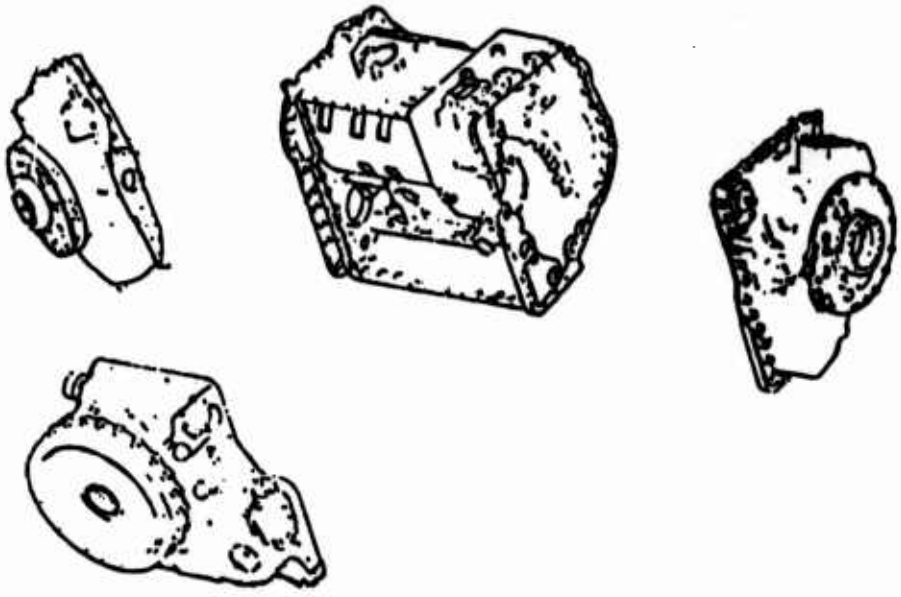

Questions 71 through 80 are related to general M1 Safety.

71. What must you make sure of before starting an engine indoors?
  1. There is proper ventilation
  2. There are three personnel on hand
  3. Turret power is set to "ON"
  4. Master power is set to "OFF"

72. What must you always make sure of when you are disconnecting a harness in the tank?
  1. That master power is off
  2. That master power is on
  3. That you notify your supervisor
  4. There is proper ventilation

73. What must you always be careful of when lifting heavy parts with a sling?
  1. Do not get under them
  2. You have a first aid kit
  3. The sling is calibrated for the weight
  4. They are sharp

74. What must you always be careful of when you are cleaning transmission parts with solvent?
  1. Solvent can damage internal parts
  2. Solvent burns easily and gives off vapors
  3. Solvent is slippery
  4. Solvent can cause unconsciousness

75. What must you do when you find a bad part during transmission maintenance?
  1. Set aside for use later
  2. Replace with a new one
  3. Repair and turn in the part
  4. Replace the transmission

76. What must you always be careful of when you are working with hydraulic fluid?
  1. Hydraulic fluid burns easily and gives off vapors
  2. Hydraulic fluid can blind you
  3. Hydraulic fluid is extremely flammable
  4. Hydraulic fluid can cause internal damage

77. What must you always do before lifting heavy parts with a sling?
  1. Inspect the sling
  2. Inspect the maintenance stand
  3. Remove the part
  4. Remove the sling

78. Why must you be careful when handling engine components after engine had been running?
  1. Engine parts could be hot
  2. Engine has high voltage
  3. Engine might catch fire
  4. Engine parts are fragile

79. What must you always do when the powerpack is removed from the tank?
  1. Install covers
  2. Ground hop the powerpack
  3. Move the engine away from the tank
  4. Elevate the main gun

80. Why must you be careful when handling the ignition exciter, ignition lead or the ignition plug on the engine?
  1. They contain high voltage
  2. They contain radioactive materials
  3. They are fragile
  4. They have sharp edges

Questions 81-85 are related to the transmission brake pack maintenance.

81. ON THE DRAWING BELOW, circle the internal-splined disk of the brake pack.

82. If any of the brake pack disks are bent, what should you do?
  1. Repair the disk
  2. Turn in the bent disk
  3. Turn in the complete brake pack
  4. Turn in the transmission

83. When you are taking out the brake pack disks, what must you do with them?
   1. Handle carefully
   2. Put on work bench
   3. Stack in order
   4. Turn them in

84. ON THE DRAWING BELOW, circle the spur gear.

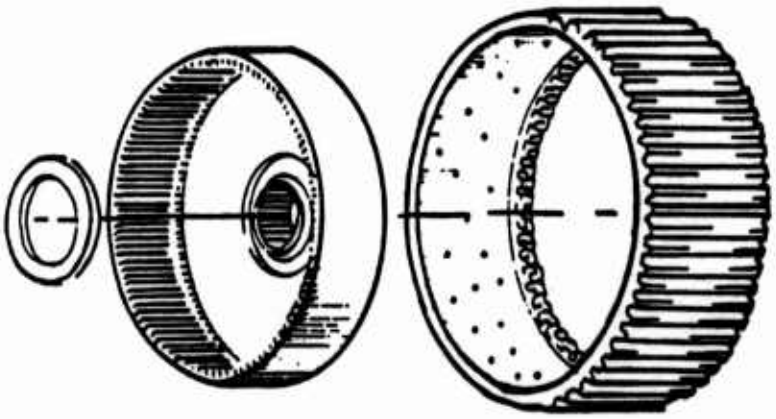

85. What special tool is needed to remove the mechanical housing?
   1. Spanner wrench
   2. Single leg sling
   3. Multiple leg sling
   4. Screwdriver

Questions 86-90 are related to troubleshooting the electrical system of the M1 transmission.

86. What must you remove to gain access to the connection between the control branched wiring harness and the brake branched wiring harness?
   1. Access Cover
   2. Right Output Module
   3. Input Module
   4. Left Output Module

87. What modules must be removed to gain access to the brake pressure switch?
   1. Left and Right Output Modules
   2. Input and Center Output Modules
   3. Input and Right Output Modules
   4. Input and Left Output Modules

88. Which preliminary procedure must be accomplished prior to removing the access cover?
   1. Remove Actuator Assembly
   2. Remove Rod and Bracket
   3. Remove Input Module
   4. Remove Right Output Module

89. What must you do right after you have removed the access cover?
   1. Replace the gasket
   2. Scrape off the gasket
   3. Cover valve body with lint free cloth
   4. Clean the access cover

90. Why are the jack bolts used when you are removing the right output module?
   1. To break the seal
   2. To lift the center module
   3. To secure the right output module
   4. To attach the sling

Questions 91 through 95 are related to forward engine module maintenance.

91. What module must be removed first before you can replace the forward engine module?
   1. Accessory Gearbox Module
   2. Rear Engine Module
   3. Reduction Gearbox Submodule
   4. Combustor Dome

92. Where on the engine should covers be installed before performing maintenance on the engine?
   1. Over the engine inlet and exhaust.
   2. Over the engine inlet and forward engine module.
   3. Over the engine inlet and accessory gearbox.
   4. Over the air bleed valve and forward engine module.

93. What must be lined up before installing the forward engine module on the rear engine module?
   1. The pin
   2. The inlet section
   3. The studs
   4. The sling

94. What must you do with the three seal rings before installing the forward engine module?
   1. Coat them with shortening compound
   2. Replace them
   3. Coat them with silver sealant compound
   4. Discard them

95. What must you do to separate the forward engine module from the rear engine module?
   1. Use lifting slings
   2. Move the dolly forward
   3. Remove the transmission
   4. Align the sling

Questions 96 through 100 are related to rear engine module maintenance.

96. When replacing the rear engine module, what major assembly must be removed after the forward engine module and the transmission have been removed?
   1. Accessory Gearbox Module
   2. Reduction Gearbox Subassembly
   3. Forward Engine Module
   4. Rear Engine Module

97. What must you do to separate the rear engine module from the transmission?
   1. Move the dolly forward
   2. Move the dolly to the rear
   3. Use lifting slings
   4. Use jack bolts

98. What special tool is needed to remove the reduction gearbox module from the rear engine module?
   1. Reduction gearbox lifting sling
   2. Special gearbox lifting sling
   3. Module lifting sling
   4. Multiple leg sling

99. What must you tighten to loosen the gearbox from the rear engine module?
   1. Jackscrews
   2. Bolts
   3. Nut
   4. Mounting bolts

100. In what position must the reduction gearbox flange be turned for attaching the sling?
   1. 12 o'clock position
   2. 6 o'clock position
   3. 10 o'clock position
   4. 9 o'clock position

Questions 101 through 105 are related to troubleshooting and inspection of the transmission.

101. If you had a multimeter reading of 00.0 in block 3, where would you go to next?
  1. Block 3
  2. Block 4
  3. Block 5
  4. Block 6

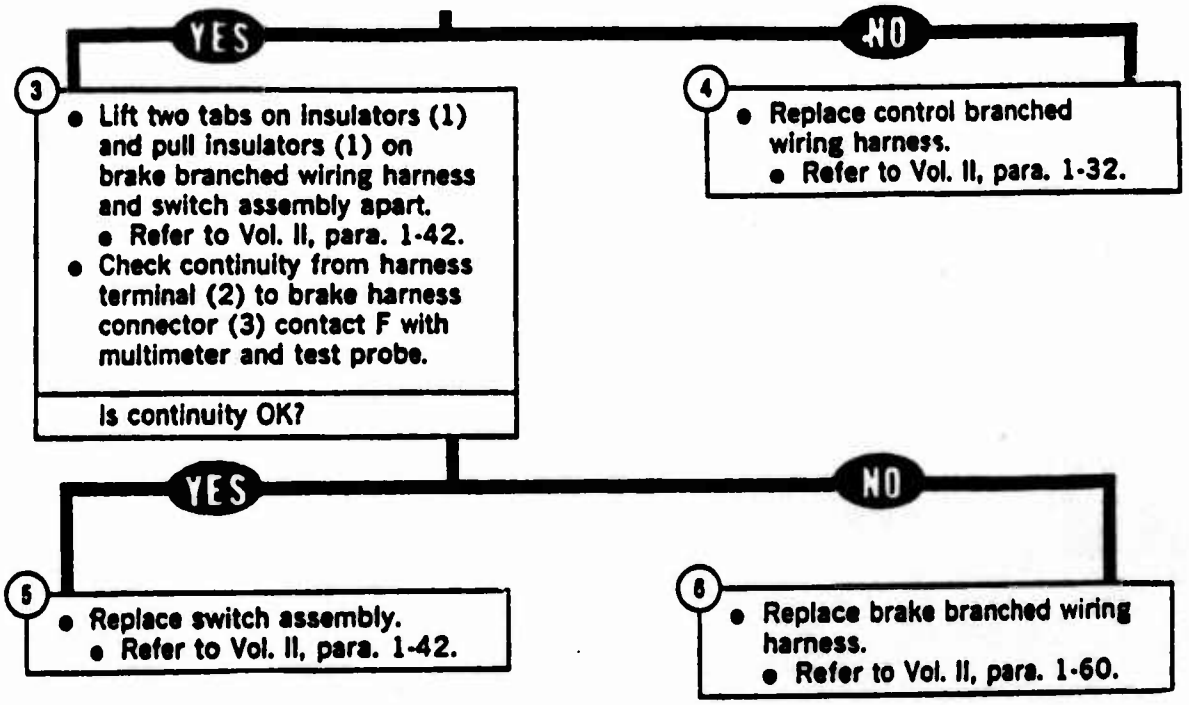

102. Why are the continuity test probes used in block 2?
  1. To connect the multimeter leads to the harness contacts
  2. To provide voltage path for testing
  3. To jump the circuit for testing
  4. To jump start the tank

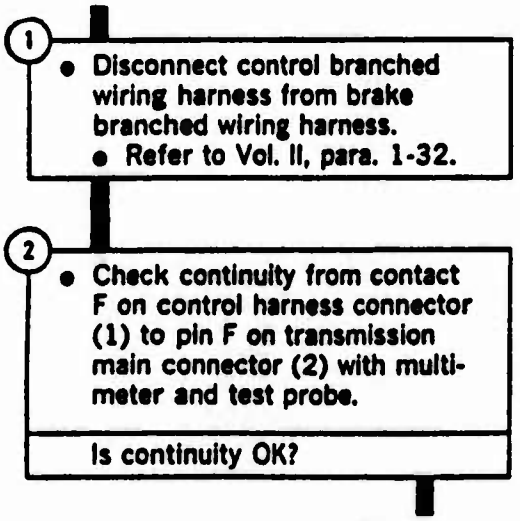

103. Where would you go to if you had a reading of 1 . on the multimeter in block 2?
1. Block 1
2. Block 2
3. Block 3
4. Block 4

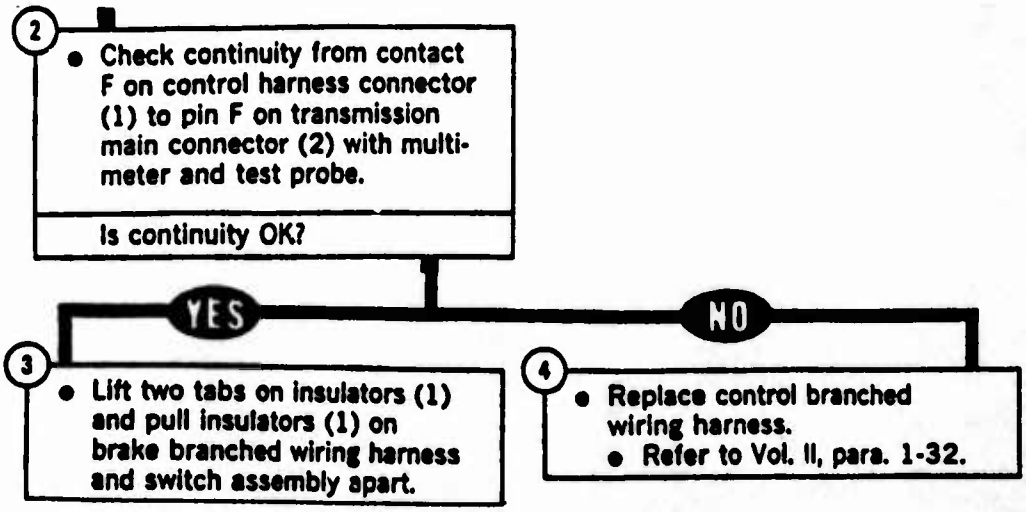

104. What should you do when removing parts from the transmission?
1. Stack them in order
2. Inspect each piece
3. Put them on work bench
4. Line them up

105. The list below is for the task of replacing the main filter assembly. What fabricated supply is needed?
1. Pan
2. Wrench
3. Handle
4. None

Applicability: Transmission 12288200

Common Tools:
Brush, paint, oval, 1-1/4 inch
Extension, socket wrench, 3/8-inch square drive, 12-inch
Handle, socket wrench, ratchet, 3/8-inch square drive
Knife, putty
Pliers, slip joint, conduit style with plastic jaw inserts NSN 5120-00-624-8065
Socket, socket wrench, 3/8-inch square drive, 5/8-inch

Special Tools: None

Supplies:
Dry Cleaning Solvent, P-D-680 (Item 5, appendix A)
Pan (fabricated - refer to appendix B)

Personnel: One

Equipment Condition:
Transmission on wood blocks.

Preliminary Procedures: None

Questions 106 through 110 are related to troubleshooting the M1 tank engine.

106. What must be replaced if metal particles are found on the air bleed valve?
   1. Rear Engine Module
   2. Air Bleed Valve Housing
   3. Forward Engine Module
   4. Main Hydraulic Panel

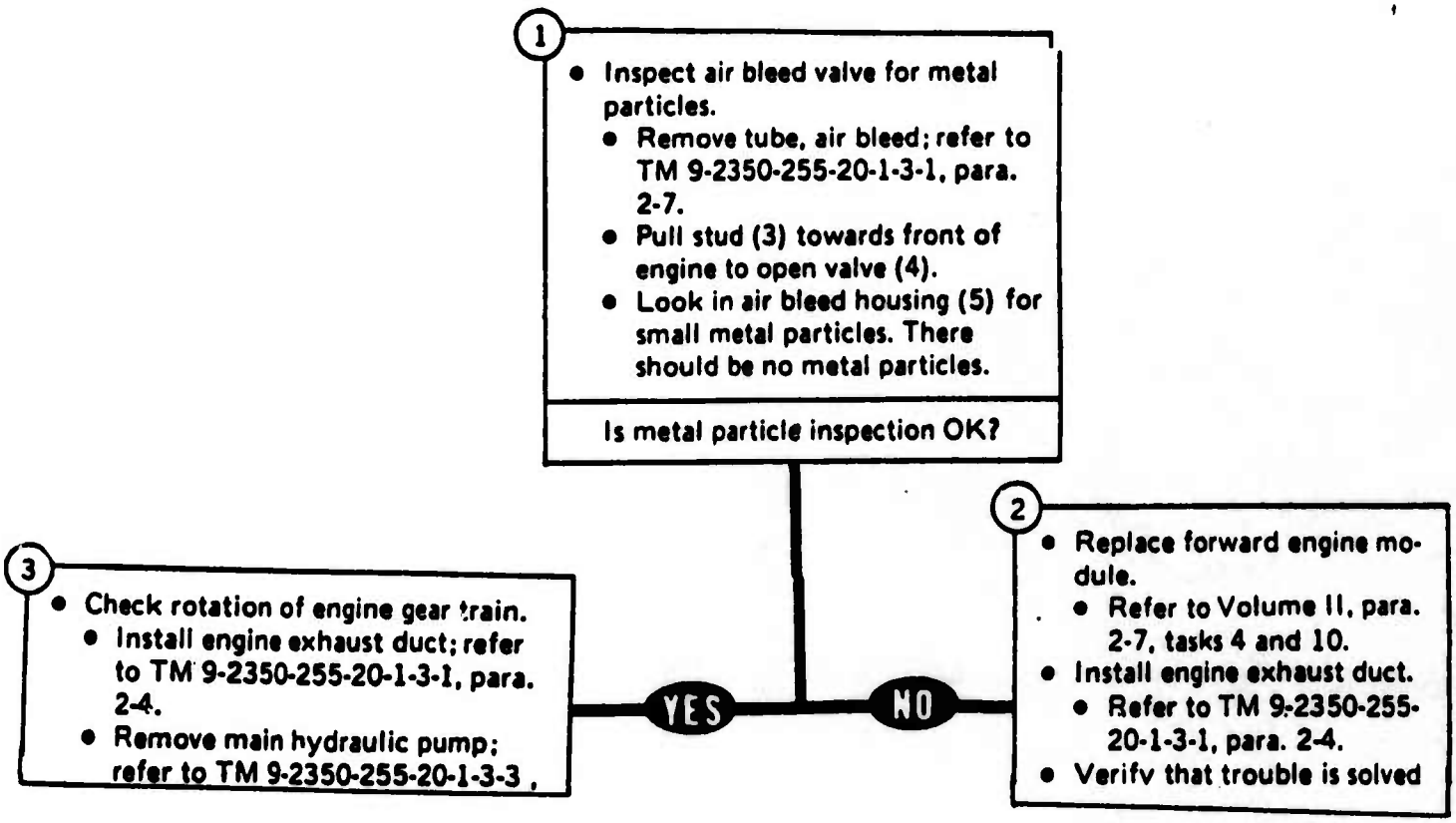

107. What is removed to inspect the outside of the collector for damage?
   1. Forward Engine Module
   2. Collector
   3. Rear Engine Module
   4. Engine Exhaust Duct

108. What special tool is needed to check the rotation of the engine gear train?
   1. Screwdriver
   2. Accessory Gear Box gear train handle
   3. Wrench
   4. Stud puller

109. Which of the following condition could cause the engine to smoke?
   1. Excessive engine oil level
   2. Damage to air bleed valve
   3. Damage to engine oil feed line
   4. Damage to recuperator

110. Which of the following condition would indicate excessive engine oil consumption?
   1. 1/2 quart per 2 hours of operation
   2. 2 quarts per 3 hours of operation
   3. 1 quart per 1 hour of operation
   4. 1/3 quart per 2 hours of operation

Questions 111 through 115 are related to use and operation of the STE-M1/FVS test set.

111. Which of the following is a designation for the "NATO" adapter?
   1. TA1
   2. CA1
   3. CX304
   4. W4

112. What color should the battery condition indicate to use the STE-M1/FVS test set in the tank?
   1. Yellow
   2. Green
   3. Red
   4. Orange

113. Which set of test numbers must be entered on the Vehicle Test Meter to run the VTM confidence test?
   1. 00,66,00
   2. 11,66,99
   3. 66,99,00
   4. 11,22,33

114. The Set Communicator message "CONNECT CX601 <—> CX602" is what kind of message?
   1. Special Instruction Message
   2. Fault Instruction Message
   3. Cable Instruction Message
   4. Follow-on Message

115. Which of the following STE-M1/FVS test set components connect to the tank power source by cable?
   1. Vehicle Test Meter
   2. Controllable Interface Box
   3. Set Communicator
   4. Transducer

APPENDIX D

TECHNICAL MANUAL TEST

63H / 45K

MTP-RC TRIAL FIELDING

TM TESTING

Directions: This part of the test has questions relating to the use of M1 Tank Technical Manuals.

Please fill in the blanks by using the Technical Manuals provided.

NAME: _____

UNIT: _____

MOS: _____

DATE: _____

On questions 116-117, write the publication and part number.

Item	Publication #	Part #
116. Fixture, track connecting	_____	_____
117. Flag set M238	_____	_____

On questions 118-120, write the lowest category of maintenance authorized to perform the actions (use MAC).

Action	Maintenance Category
118. Replace combustor liner	_____
119. Replace engine electromechanical fule unit	_____
120. Replace hull harness (2W114)	_____

On questions 121-123, write the publication and what special tools or equipment are required for the tasks.

Task	Publication #	Special Tools, Equipment, and Part Number
121. Remove rear engine module from shipping container	_____	_____
122. Remove accessory gearbox	_____	_____
123. Direct support test of driver's instrument panel	_____	_____

On questions 124-126, write the publication required to perform the task.

Task	Publication required
124. Replace driver's hatch seal	_____
125. Adjust headlight	_____
126. Replace engine accessory gearbox	_____

On questions 127-129, write how much time is required for the maintenance tasks. (Use the MAC).

Task	Time required
127. Replace regenerator assemby rear engine module	_____
128. Replace transmission assembly crossdrive	_____
129. Replace driver's alert indicator panel	_____

On questions 130-133, write the publication and page number for the malfunctions and/or maintenance tasks.

Task	Page #	Publication #
130. Replace fire extinguisher amplifier	_____	_____
131. Transmission does not downshift	_____	_____
132. Engine smokes excessively	_____	_____
133. Replace engine compressor speed pickup No. 2	_____	_____

APPENDIX E

PAPER AND PENCIL TEST SCORES

45E

() Number of Items

	Total (100)	Breakout Box (10)	Multi Meter (10)	STE-M1 (15)	Tech Manual (10)	Turret Components & Operation (10)
Final Sample						
Pretest (n=7)	69.8	6.7	6.0	11.3	5.7	8.3
Posttest (n=7)	74.1	8.3	7.8	11.8	6.1	8.8
p < .05			*			
Original Sample						
Pretest (n=10)	66.4	6.9	6.0	10.9	5.3	7.7
AIT (n=54)	72.6	8.3	6.5	12.2	5.6	8.9
p < .05	*	*				*
Final Sample						
Posttest (n=7)	74.1	8.3	7.8	11.8	6.1	8.8
AIT (n=54)	72.6	8.3	6.5	12.2	5.6	8.9
p < .05						

	Firing Circuit Subsystem (5)	Laser Range finder (5)	Computer System (5)	Trouble-shooting (20)	Safety (10)
Final Sample					
Pretest (n=7)	3.7	3.1	2.7	14.3	8.0
Posttest (n=7)	3.7	2.4	2.8	14.1	8.3
p < .05					
Original Sample					
Pretest (n=10)	3.1	2.9	2.6	13.4	7.6
AIT (n=54)	3.5	2.8	3.2	13.3	8.3
p < .05					*
Final Sample					
Posttest (n=7)	3.7	2.4	2.8	14.1	8.3
AIT (n=54)	3.5	2.8	3.2	13.3	8.3
p < .05					

63E

	Total	Break-out Box	Multi Meter	STE-M1	Tech Manual	Hull Component & Operations
	(105)	(10)	(10)	(15)	(10)	(10)
Final Sample						
Pretest (n=7)	61.3	6.0	3.4	9.4	5.0	7.4
Posttest (n=7)	70.3	7.4	5.1	10.8	5.1	8.3
$p < .05$	*		*			
Original Sample						
Pretest (n=9)	62.5	6.3	3.8	9.6	5.0	7.6
AIT (n=67)	68.2	7.0	4.8	11.1	5.4	7.2
$p < .05$						
Final Sample						
Posttest (n=7)	70.3	7.4	5.1	10.8	5.1	8.3
AIT (n=67)	68.2	7.0	4.8	11.1	5.4	7.2
$p < .05$						

	Engine Principles	Electrical Charging Subsystem	Trans-mission Principles	Power Distri-bution Subsystem	Trouble shoot-ing	Safety
	(5)	(5)	(5)	(5)	(20)	(10)
Final Sample						
Pretest (n=7)	3.0	2.6	2.0	3.6	11.9	7.0
Posttest (n=7)	3.6	3.4	2.1	3.8	13.3	7.4
$p < .05$						
Original Sample						
Pretest (n=9)	3.1	2.6	2.0	3.7	11.9	7.1
AIT (n=67)	3.8	2.7	1.9	2.7	13.5	8.1
$p < .05$	*			*		*
Final Sample						
Posttest (n=7)	3.6	3.4	2.1	3.8	13.3	7.4
AIT (n=67)	3.8	2.7	1.9	2.7	13.5	8.1
$p < .05$				*		

45K

	Total (100)	Break-out Box (10)	Multi-Meter (10)	DSESTS (15)	Tech Manual (10)	Turret Components & Operations (10)
Final Sample						
Pretest (n=7)	42.4	5.7	3.7	6.4	3.7	5.6
Posttest (n=7)	53.3	5.8	4.8	8.3	4.4	5.6
$p < .05$	*					
Original Sample						
Pretest (n=11)	43.9	5.7	3.2	6.5	4.0	5.4
AIT (n=56)	61.9	7.2	5.4	8.6	5.2	7.8
$p < .05$	*	*	*	*	*	*
Final Sample						
Posttest (n=7)	53.3	5.8	4.8	8.3	4.4	5.6
AIT (n=56)	61.9	7.2	5.4	8.6	5.2	7.8
$p < .05$						

	Turret Net-works Box (5)	Commander Weapon Station PCU (5)	Gun Turret Drive Electronic Unit (5)	Trouble-Shooting & Main-tenance (20)	Safety (10)
Final Sample					
Pretest (n=7)	1.4	1.1	1.4	7.8	5.4
Posttest (n=7)	1.0	2.0	1.8	10/4	8.1
$p < .05$				*	*
Original Sample					
Pretest (n=11)	1.1	1.4	1.2	9.4	6.0
AIT (n=56)	2.5	2.7	2.6	12.0	8.0
$p < .05$	*	*	*	*	*
Final Sample					
Posttest (n=7)	1.0	2.0	1.8	10.4	8.3
AIT (n=56)	2.5	2.7	2.6	12.0	8.6
$p < .05$	*				

63H

	Total (115)	Break-out Box (10)	Multi Meter (10)	STE-M1 (15)	Tech Manual (10)	Hull Components & Operations (10)
Final Sample						
Pretest	45.5	3.5	3.9	6.4	2.7	4.1
Posttest	60.1	4.0	5.1	8.4	3.1	6.0
$p < .05$	*		*	*		*
Original Sample						
Pretest	44.6	3.1	3.4	6.4	2.8	4.0
AIT	70.2	6.2	4.2	9.5	4.6	6.8
$p < .05$	*	*		*	*	*
Final Sample						
Posttest	60.1	4.0	5.1	8.4	3.1	6.0
AIT	70.2	6.2	4.2	9.5	4.6	6.8
$p < .05$	*	*			*	

	Power Pack Compo-nents (20)	Trans-mission Mainte-nance (10)	Engine Modules (10)	Trans-mission Trouble-shooting (5)	Engine Inspection (5)	Safety (10)
Final Sample						
Pretest	7.0	4.4	3.1	2.2	2.8	5.6
Posttest	12.7	5.6	4.5	2.9	2.3	7.5
$p < .05$	*	*	*	*		*
Original Sample						
Pretest	7.0	4.8	3.0	2.0	2.1	6.0
AIT	15.0	5.3	4.8	2.9	2.5	7.5
$p < .05$	*	*	*			*
Final Sample						
Posttest	12.7	5.6	4.5	2.9	2.3	7.5
AIT	15.0	56.3	4.8	2.9	2.5	7.5
$p < .05$	*					