AD-A124 511 CORRECTIONS FOR FREQUENCY RESPONSE DIFFERENCES IN MULTIPLE RECEIVER ARRAYS(U) COMMUNICATIONS RESEARCH CENTRE OTTAWA (ONTARIO) J L ROBINSON ET AL. APR 82 1/1

UNCLASSIFIED CRC-TN-711 F/G 9/5 NL

END
FILMED
4-84
DTIC

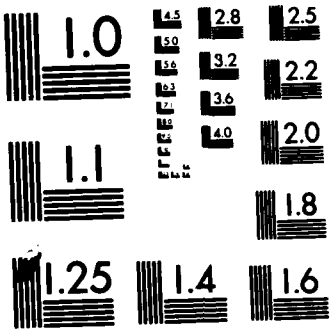

MICROCOPY RESOLUTION TEST CHART
NATIONAL BUREAU OF STANDARDS-1963-A

AD A 124511

UNLIMITED DISTRIBUTION
ILLIMITÉE

Communications Research Centre

CORRECTIONS FOR FREQUENCY RESPONSE DIFFERENCES IN MULTIPLE RECEIVER ARRAYS

by

J.L. Robinson and R.W. Jenkins

DTIC
ELECTE
FEB 1 6 1983
S D
E

This work was sponsored by the Department of National Defence, Research and Development Branch under Project No. 32B51

DEPARTMENT OF COMMUNICATIONS
MINISTÈRE DES COMMUNICATIONS

CRC TECHNICAL NOTE NO. 711

FILE COPY

CANADA

OTTAWA, APRIL 1982

COMMUNICATIONS RESEARCH CENTRE

DEPARTMENT OF COMMUNICATIONS
CANADA

CORRECTIONS FOR FREQUENCY RESPONSE DIFFERENCES IN MULTIPLE RECEIVER ARRAYS

by

J. L. Robinson and R.W. Jenkins

(Radar and Communications Technology Branch)

CRC TECHNICAL NOTE NO. 711

April 1982
OTTAWA

This work was sponsored by the Department of National Defence, Research and Development Branch under Project No. 32B51

CAUTION
The use of this information is permitted subject to recognition of proprietary and patent rights.

TABLE OF CONTENTS

ABSTRACT 1

1. INTRODUCTION 1

2. MEASUREMENTS 3

   2.1 Description 3

   2.2 Results 4

3. CORRECTION TECHNIQUES 6

   3.1 Fourier Transform Technique 6

   3.2 Linear Correction 9

4. DISCUSSION AND CONCLUSIONS 11

5. ACKNOWLEDGEMENTS 11

6. REFERENCES 11

APPENDIX A - Tolerance Calculation 13

Accession For
NTIS GRA&I ☒
DTIC TAB ☐
Unannounced ☐
Justification
By
Distribution/
Availability Codes
Dist | Avail and/or Special
A

DTIC COPY INSPECTED 2

CORRECTIONS FOR FREQUENCY RESPONSE DIFFERENCES IN MULTIPLE RECEIVER ARRAYS

by

J.L. Robinson and R.W. Jenkins

ABSTRACT

In interference-cancelling antenna array systems where the signals are combined after passing through receivers, the differential frequency responses of the receivers act to limit the null depth and therefore the degree of interference rejection attainable for finite-bandwidth interference. An experimental four-element HF antenna array is used as an illustration; the measured differential frequency-dependent phase and amplitude responses of the receivers are presented and the corresponding limits to null-depth derived, for a 3 KHz bandwidth. Correction techniques, including an exact software procedure and a hardware-implementable approach to linear phase correction are presented, and their requirements and anticipated performance considered.

1. INTRODUCTION

Interference-cancelling antenna arrays operate by placing nulls in the direction of unwanted signals while at the same time maintaining non-zero gain in other directions. This is done by weighting i.e. adjusting the amplitude and phase of the signals received from the various array elements and then combining them. Unwanted signals are adjusted so as to cancel upon combination.

In many arrays, the signals pass through receivers before they are weighted and combined. In such systems, differences in the frequency responses of the receivers cause a frequency variation of the relative signal amplitudes and phases between receivers. Frequency-independent weighting which allows a

signal component at one frequency to completely cancel itself upon combination will therefore not be effective for signal components at other frequencies, and a limit to the null depth obtainable for non zero-bandwidth signals is set.

An estimate for this null depth is derived in the Appendix. The result is

$$P_N/P_A = \sigma_\rho^{\ 2} + \sigma_\phi^{\ 2} \tag{1}$$

where P_N is the array gain in the direction of the interfering signal, P_A is the average array gain, and $\sigma_\rho^{\ 2}$ and $\sigma_\phi^{\ 2}$ are the variances in receiver gain (expressed as a dimensionless ratio) and phase delay (in radians^2), taken relative to the mean frequency response of the receivers. Some representative null depths for various values of σ_ρ and σ_ϕ are given in Table 1. These values can also be considered as the limits to σ_ρ and σ_ϕ that must not be exceeded in order to achieve a certain level of interference cancellation.

TABLE 1

Achievable Null Depths, for Various Equal-Contribution Amplitude and Phase Variances

P_N/P_A (dB)	σ_ρ	σ_ϕ (degrees)
-20	.071	4.1
-30	.022	1.3
-40	.007	0.4
-50	.002	0.1

In this paper we consider the magnitude of the above described differential frequency response effect and techniques for reducing it. The case of an experimental four-element HF array using good quality commercially available receivers and employing adaptive interference cancelling at baseband is used as an illustration. A series of measurements of the amplitude and phase response of the receivers in the experimental array is presented and the null depths achievable for broadband interference are calculated. Two correction techniques are described: a precise software-implementable correction technique that uses Fourier transforms, and an approximate correction technique involving a linear phase correction using time delays. Required processing times, expected corrections and some general conclusions are discussed.

2. MEASUREMENTS

2.1 DESCRIPTION

The equipment configuration for the measurements is shown in Figure 1. The input RF signal was generated by a frequency synthesizer (Hewlett Packard 3335A), suitably attenuated, split four ways, and routed through the four receivers. Each receiver (RACAL 6790) was tuned to the input RF and set for a 6 kHz bandwidth. The receivers were driven by a common reference signal, so that the relative phases of the input signals were maintained. The 455 kHz IF outputs were mixed down to baseband and split into in-phase (I) and quadrature (Q) channels in the hybrid quadrature mixers. The 455 kHz mixing signal was provided externally by a frequency synthesizer (HP 3335A). The eight output signals were routed through low pass filters with an upper cut-off frequency of 1.5 kHz (Precision Instruments filter unit). One line was chosen as a reference and connected via the channel A input to the spectrum analyzer (HP 3582A). The remaining lines were connected in turn to the channel B input. The spectrum analyzer provided a digital readout of the amplitude for all eight lines and relative phase measurements of the last seven lines with respect to the first line. The receivers were tuned to a center frequency of 11 MHz and the input signal was stepped in 100 Hz increments from 10.9985 MHz to 11.0015 MHz.

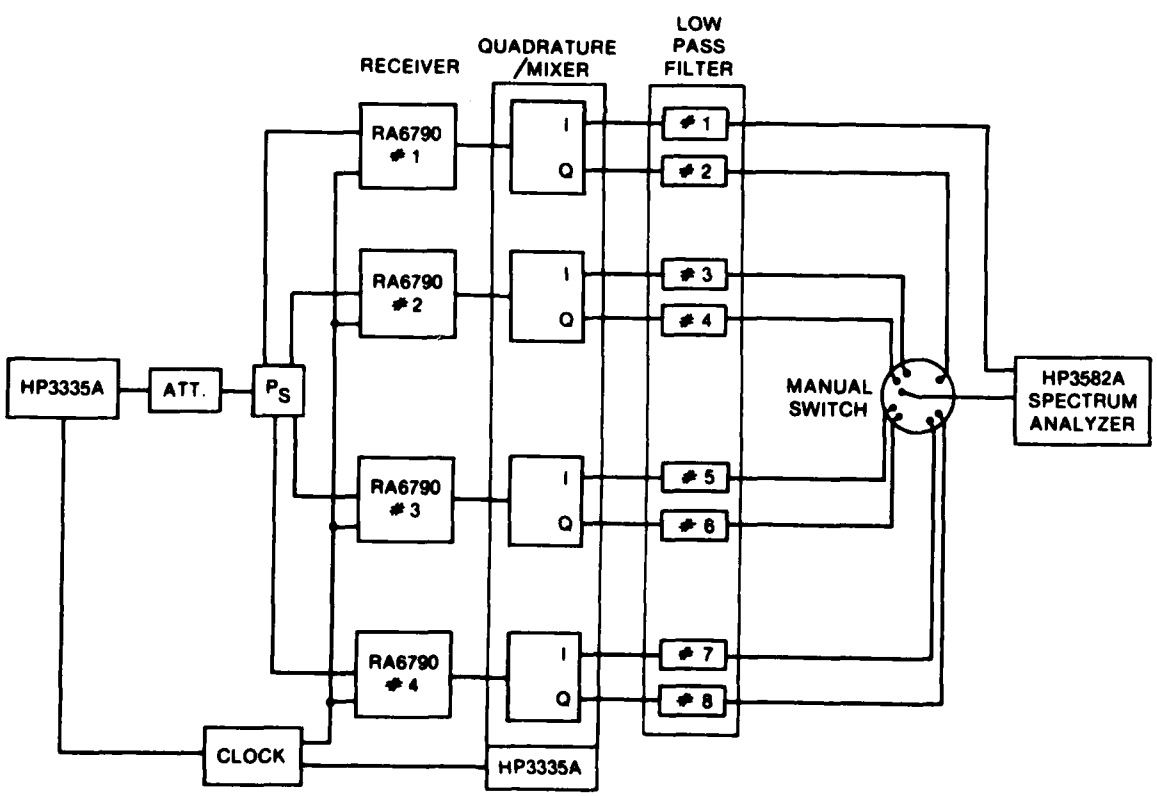

Figure 1. Measurement Equipment Configuration

2.2 RESULTS

Figure 2 shows the amplitude response of the eight output channels across the frequency band. There is a difference in the absolute magnitude of the receiver outputs of at most 4.5 dB, and a much smaller variation with frequency in the ratios of amplitudes over the receiver bandwidth (at most 0.2 dB). This latter feature is seen clearly in the bottom of Figure 2. In this figure the distribution about the mean of the amplitude of channel 3 relative to the amplitude of channel 1 is shown. The variance for these results has been calculated to be $\sigma_\rho^2 = 3.36\text{x}10^{-5}$. The total variance for all channels relative to the average channel amplitude response was also calculated, giving $\sigma_\rho^2 = 1.051\text{x}10^{-4}$.

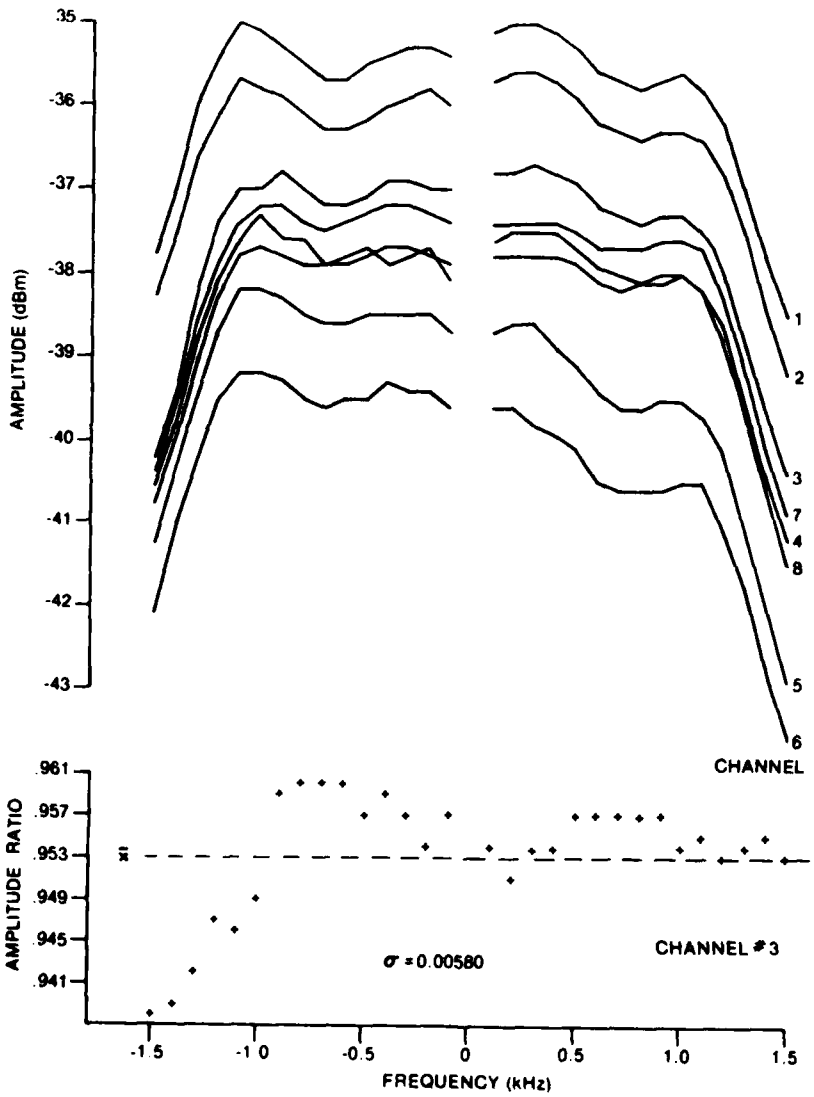

Figure 2. Amplitude Responses of the Eight Outputs and the Ratio of Amplitudes for Output 3 Relative to Output 1.

Figures 3(a), (b), (c) and (d) show the relative phase response of channels 2 through 8 with respect to channel 1. Figure 3(a) shows the measured phase difference between the I and Q outputs of receiver 1, which as expected, is approximately 90 degrees and shows little variation across the pass band. Figures 3(b) - (d) show a characteristic monotonic decrease in relative phase across the ±1.5KHz frequency band. Least mean square straight line fits to the data have been calculated and are included in these figures. The fluctuations of the data about these straight line fits are approximately the same for the I and Q outputs from the same receiver. The straight line fits are further discussed in Section 3.2. The total variance of all phase data points with respect to the average frequency response was estimated from the phase data to be $\sigma_\phi^2 = 5.3\times10^{-3}$ (radians^2).

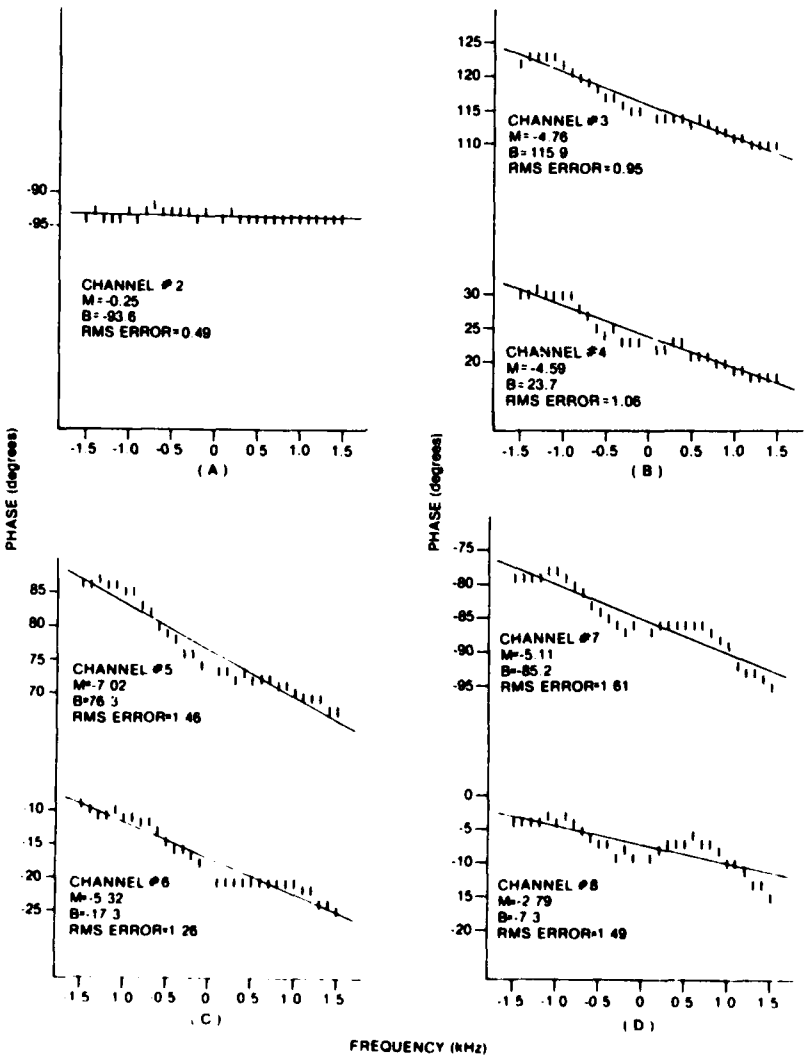

Figure 3. Relative phase response of the outputs with respect to output 1. M is the slope and B is the zero intercept of the least mean square straight line fit to the data.

It follows from Equation (1), using the value of σ_ρ^2 and σ_ϕ^2 given above, that the differential frequency responses of the receivers will limit null depths to:

$$P_N/P_A = \sigma_\rho^2 + \sigma_\phi^2$$

$$= 1.051\text{x}10^{-4} + 5.3\text{x}10^{-3} = 5.4\text{x}10^{-3}, \text{ or } -22.7\text{dB}$$

with the largest contributing factor to the limit being the phase differences.

3. CORRECTION TECHNIQUES

Two techniques are described for making corrections to the differential frequency response to assure satisfactory null depths. First, a completely general computational approach that uses frequency domain amplitude and phase measurements is described in detail. This approach can be used if sufficient signal processing power is available. Second, a hardware approach is described that staggers the sampling times and can be used when a linear correction to the phase error is sufficiently accurate.

3.1 FOURIER TRANSFORM TECHNIQUE

A correction for the difference in the frequency response of one or more receivers relative to a standard receiver can be made by directly correcting the data in the frequency domain. This technique requires a processor that has a real time Fourier transform capability. A finite sequence digital compensation filter is constructed using frequency response measurements of the receivers and is kept available in the signal processor memory. The correction is accomplished by a discrete linear convolution of the finite filter sequence with the indefinite length incoming signal sequence [1]. This is best implemented by a multiplication in the frequency domain. The entire correction procedure is accomplished in software and should be designed to be as fully automated as possible for operator convenience.

The construction of the frequency domain sequence representing the compensation filter is based on calibration data obtained using the experimental configuration given in Figure 1 and following the measurement procedure given below:

1. Set the synthesizer to an appropriate starting frequency (f_o).

2. Distribute the sine wave signal from the synthesizer equally to all receiver inputs.

3. Allow sufficient time for steady state conditions to become established.

4. Perform A/D sampling and Fourier transformation of receiver output to obtain amplitude and phase measurements at f_o.

5. Repeat steps (1)-(4) for all frequencies across the response band of the receivers, in steps of width Δf.

In accordance with step #4, the digitized receiver outputs give a time sequence $x_n(t_i)$; $i=1,\ldots,N$ at each input frequency for each output channel n. A discrete Fourier Transform (DFT) is computed at each input frequency with the N samples from each receiver output, thereby providing the complex frequency domain representation of the output. At an arbitrary frequency f_k for example,

$$x_n(f_k) = \sum_{i=1}^{N} x_n(t_i)\exp\left(-j2\pi f_k t_i\right) = A_n(f_k)\exp\left(-j\phi_n(f_k)\right)$$

where $x_n(f_k)$ is the output from channel n for the input signal at frequency f_k and $A_n(f_k)$ and $\phi_n(f_k)$ are the amplitude and phase respectively of the frequency domain representation of the channel n output signal.

With one output, m, chosen as the standard, the filter coefficient at frequency f_k for any other output n, is defined by

$$K_n(f_k) = \frac{A_m(f_k)}{A_n(f_k)} \exp\left(-j(\phi_m(f_k)-\phi_n(f_k))\right)$$

where A_m/A_n and $\phi_m-\phi_n$ are the relative amplitude ratio and phase difference of the nth output with respect to the mth output. It is essential that the sampling rate used during calibration is matched to the sampling rate of the implementation. This is ensured by the following procedure (the requirement for this matching procedure is discussed below):

1. Begin with $K_n(f_k)$ obtained during the calibration at Q points with frequency spacing Δf.

2. Expand to $M=2Q-1$ points using the symmetry relation: $K_n(f_k) = K_n(M\Delta f-f_k)$.

3. Compute an M point inverse FFT; the impulse response has length M and spacing $\Delta t = 1/M\Delta f$.

4. Insert M zeroes onto the end of the impulse response.

5. Compute a 2M point FFT; the new $K_n(f)$ has M+1 unique points with frequency spacing $\Delta f' = 1/2M\Delta t = \Delta f/2$.

This filter coefficient is now the desired factor and the multiplication

$$X_n(f_k)K_n(f_k) = X_m(f_k)$$

makes the desired correction, where $K_n(f_k)$ is stored in the processor memory and $X_n(f_k)$ is the DFT component at frequency f_k of the signal from receiver output n. This will correct the frequency response error relative to channel m.

The discrete linear convolution procedure for correcting variations in the frequency response of the receivers involves the computation of DFTs on consecutive blocks of the incoming sampled time signal. These blocks are multiplied by $K_n(f_k)$ in the frequency domain and then an inverse DFT is computed giving a finite output sequence. The output blocks must be carefully assembled to give the correct indefinite length output time sequence. One iteration of this operation as it would be applied to each channel using the overlap and add procedure [2] involves the following steps:

1. The input of M real time samples is augmented with M zeroes.

2. A 2M point FFT of the time sequence is computed: this gives for output n, $X_n(f)$ with M+1 unique points.

3. Compute $X'_n(f_k) = X_n(f_k)K_n(f_k)$ (for all M+1 frequency points; generate another M-1 points using symmetry).

4. A 2M point inverse FFT of $X'_n(f)$ is computed to get 2M time domain points.

5. The first M points of the time domain sequence are added to the last M points from the previous iteration; the second M points are saved.

6. Repeat (1) - (5) with the next M time samples.

Care most be taken in choosing the calibration frequency step size and the time sampling rate to avoid seriously distorted results due to spectral leakage. The step size in the filtering operation must be compatible with the step size in the calibration measurement [2]. This is ensured by the choice of compatible sampling rates and a zero padding procedure that is used in contructing the filter $K_n(f_k)$. When the time sampling rate is $1/\Delta t$ and the incoming time signal is being processed in groups of M samples the frequency spacing in the calibration measurement is $\Delta f = 1/M\Delta t$.

Most of the processing time required by the correction algorithm is taken up with Fourier transforms and multiplication. The implementation of the correction for one channel at a sampling rate of 5K samples/second and block size of M=1024 samples, would require approximately 5 iterations per second. For eight channels this increases to 40 iterations per second or a time of 25 milliseconds per convolution. Tests [3] of the processing speed of one array processor (AP 400) have found that a 1024 point complex

convolution operation (FFT+multiplication+IFFT) can be computed within a time of 20 milliseconds. Therefore it is concluded that a differential frequency response correction based on the Fourier convolution filtering technique can be implemented using available state-of-the-art high speed processors.

3.2 LINEAR CORRECTION

The results presented in this paper for a four-element array indicate that the extent to which signals can be nulled is limited more by variations in the phase response of the channels than variations in the amplitude response. Also the overall variation of phase as seen in Figure 3, is largely a linear function of frequency, at least over the 3 kHz bandwidths considered.

A differential phase response that varies linearly with frequency can be considered as a relative time delay between the receiver output lines. Suppose a signal $\exp(j2\pi ft)$ is incident on the inputs to lines 1 and n, and the effect of the two lines is to introduce a time delay T_i, (i=1,n), plus an arbitrary amplitude gain and phase change. The output signals are then:

$$A_1 \exp(j(2\pi f(t-T_1)+\theta_1)) \text{ for line 1}$$

$$A_n \exp(j(2\pi f(t-T_n)+\theta_n)) \text{ for line n}$$

The differential phase-response is then given by:

$$\Delta_{1n}\phi = -2\pi f(T_1-T_n)+\theta_1-\theta_n = 2\pi(\Delta_{1n}T)f+(\theta_1-\theta_n)$$

where $\Delta_{1n}T = T_1 - T_n$ is the time between lines. Relating this to the observed linear dependence $\Delta_{1n}\phi = M_{1n}f + B_{1n}$ where M_{1n} is the slope and B_{1n} is the zero intercept, we find the differential time delay to be $\Delta_{1n}T = -M_{1n}/2\pi$.

Table 2 gives the differences in time delay between channels 2 to 8 and reference channel 1, derived from the straight-line fits to the data in Figure 3.

The maximum observed time delay is of the order of 20 microseconds, which is considerably less than the 333 microsecond Nyquist complex sampling interval required for 3 kHz bandwidth signals. For a digital receiving system, time delays of that magnitude can be readily corrected by making small adjustments to the sampling time for the analog-to-digital converter at each receiver output. A possible hardware implementation is shown in Figure 4.

Once a time delay correction is made, the linearly dependent portion of the differential frequency phase-response will be removed. From the residual differential frequency responses, a new upper bound to the interference cancellation achievable can be found, by using Equation 1. We get, for the measured receivers after time delay correction

$$\sigma_\rho^2 = 2.52\text{x}10^{-4}$$

and $\sigma_\phi^2 = 1.05\text{x}10^{-4}$ as before, so that

$P_N/P_A = 3.57\text{x}10^{-4}$, or -34.5dB. This is a considerable improvement over the previous limit of -22.7dB found for the uncorrected measurements in Section 2.2.

TABLE 2

Values M_{1n} of the Slope of the Straight Line Fits to the Differential Phase Response Results of Figure 3, and the Corresponding Implied Differential Time Delays $\Delta_{1n}T$

Channel #	M_{1n}	$\Delta_{1n}T$
1	0°/KHz	0 microseconds
2	-0.25	0.69
3	-4.76	13.22
4	-4.59	12.75
5	-7.02	19.50
6	-5.32	14.78
7	-2.79	7.75
8	-5.11	14.19

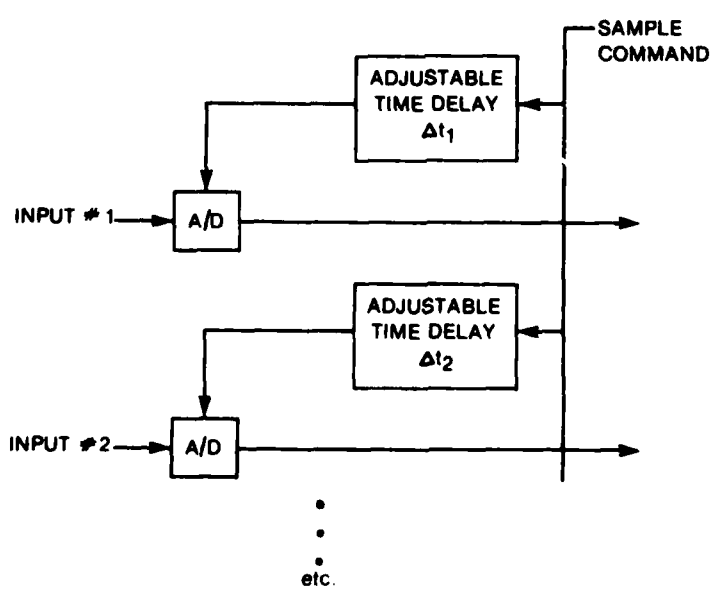

Figure 4. Possible Hardware Implementation for Linear Correction by Staggered Sampling Times

AD-A124511

4. DISCUSSION AND CONCLUSIONS

Achievable null depths for an operational adaptive antenna are governed, according to Equation 1, by the differential frequency response of the receiving equipment located ahead of the signal-summing apparatus. This equipment includes the antennas and any feed lines, preamplifiers, filters and receivers which precede the circuit that does the summation.

The measurements reported herein, on a set of four identical good commercial grade receivers, showed that without correction the null depth for a 3 kHz bandwidth signal in an array using these receivers would be limited to 22.7 dB. It was observed that this limit was mostly due to the differences in phase response between receivers (17dB above the amplitude response limitation). Further, the phase differences in frequency response were mainly linear functions of frequency, which permitted their interpretation as frequency-independent differences in receiver time-delay. If these time delays were corrected for, the residual phase-response contributions would be about the same order of magnitude as the differential amplitude response contribution. The resulting null depth would be 34.5 dB for a 3 kHz bandwidth signal. A linear phase difference correction is easily implemented in a digitally sampled system by adjusting the relative sampling times.

Another factor which limits the attainable null depth is the siting of antenna elements. A previous set of measurements [4] in one instance indicated worst-case null depths due to antenna element siting limited to 35 dB. Therefore, the presently considered receivers, together with a time delay correction, would not greatly decrease the attainable null depths for that array.

When factors other than receiver frequency response do not limit the null depth, the general, more direct approach using the FFT considered herein for receiver frequency response correction would allow deeper nulls to be achieved. Such an approach is more difficult to implement, but with state-of-the-art technology it can be done for 3 kHz bandwidths and a four-element adaptive array. It should therefore be considered when other limitations do not already restrict the null depth, and greater null depths are desired.

5. ACKNOWLEDGEMENTS

The authors wish to thank J. Litva for his assistance in reviewing and editing this report. J.L. Robinson acknowledges a post doctoral fellowship from the NSERC. This work has been funded by the Department of National Defence.

6. REFERENCES

1. A.V. Oppenheim and R.W. Schafer, *Digital Signal Processing*, Prentice-Hall, 1975.

2. R.K. Otnes and L. Enochson, *Applied Time Series Analysis*, Vol. 1, J. Wiley & Sons, 1978.

3. G.O. Venier, private communication (internal CRC memorandum).

4. R.W. Jenkins and A.E. Waltho, private communication (internal CRC memorandum).

APPENDIX A

Tolerance Calculation

With an antenna array of N/2 elements which uses of quadrature splitting in the receivers there are N output lines on which the output weighted voltages are summed to produce a total output voltage, i.e.,

$$V_{out} = \int \sum_{n=1}^{N} V_n(f)df \ , \qquad \text{where } V_n(f) = S_n(f)W_nR_n(f)$$

Here $S_n(f)$ is the complex input signal to the nth channel, W_n is the applied complex frequency independent weight and $R_n(f)$ is the complex response of the nth channel to the signal. For a narrow band signal $S_n(f) = S_nS(f)$ (i.e. the input signal can be shown to have a separable channel dependence and frequency dependence over the signal bandwidth). When all channels are "ideal", they will have the same frequency response, at least to within a multiplicative constant: i.e., $R_n(f) = C_nR(f)$, C_n a complex number. We can then write

for the ideal case $V_{n_o}(f) = S_nc_nw_nS(f)R(f)$ ($V_{n_o}(f)$ represents $V_n(f)$ for the for the ideal case), and find non-zero values of W_n such that

$$\sum_{n=1}^{N} w_nS_nC_n = 0 \text{ and therefore } V_o(f) = \sum_{n=1}^{N} V_{n_o}(f) = 0 \text{ and } V_o(\text{out}) = 0$$

(a perfect null). Assume that the weights W_n are so selected. Consider now a departure from the ideal case, where the differential frequency responses, i.e., departures from the "average" frequency response are uncorrelated between the receiver output lines so that $V_n(f) = V_{n_o}(f) + \delta V_n(f)$. The output power is then given by

$$P_N(\text{out}) = \int \left|\sum_{n=1}^{N} V_n(f)\right|^2 df = \int \left|\sum_{n=1}^{N} V_{n_o}(f) + \sum_{n=1}^{N} \delta V_{n_o}(f)\right|^2 df = \int \left|\sum_{n=1}^{N} \delta V_n(f)\right|^2 df$$

The $\delta V_n(f)$ are uncorrelated between channels, the terms in cross-products are zero, and so the expression for output power reduces to

$$P_N = \int \left|\sum_{n=1}^{N} \delta V_n(f)\right|^2 df = \int \sum_{n=1}^{N} \left|\delta V_n(f)\right|^2 df.$$

Writing the frequency response of the receivers as $R_n(f) = r_n(f)\exp(j\phi_n(f))$ and considering only random differential frequency responses in the amplitude $r_n(f)$ and phase $\phi_n(f)$ response of the receiver, we get

$$\delta V_n(f) = \delta\left(S_n(f)W_nR_n(f)\right) = V_n(f)\left(\frac{\delta r_n(f)}{r_n(f)} + j\delta\phi_n(f)\right)$$

$$= V_n(f)\left(\delta\rho_n(f) + j\delta\phi_n(f)\right)$$

where $\delta\rho_n(f)$ is the normalized difference $\delta r_n(f)/r_n(f)$ in the amplitude response from the mean at that frequency, and $\delta\phi_n(f)$ the difference in phase response from the mean at that frequency. The power received in the null direction then becomes

$$P_N = \int\sum_{n=1}^{N} |V_n(f)|^2\left(\delta^2\rho_n(f) + \delta^2\phi_n(f)\right)df.$$

For completely uncorrelated signals of similar amplitude in the output channels, the output power would have been the average array gain

$$P_A = \int|V(f)|^2df = \int\sum_{n=1}^{N} |V_n(f)|^2df.$$

Using this as a reference level, the null depth is given by

$$P_N/P_A = \frac{\int\sum_{n=1}^{N} |V_n(f)|^2\left\{\delta^2\rho_n(f) + \delta^2\phi_n(f)\right\}df}{\int\sum_{n=1}^{N} |V_n(f)|^2df} = \sigma_\rho^2 + \sigma_\phi^2$$

where

$$\sigma_\rho^2 = \frac{\int\sum_{n=1}^{N} |V_n(f)|^2\delta^2\rho_n(f)df}{\int\sum_{n=1}^{N} |V_n(f)|^2df} \quad \text{and} \quad \sigma_\phi^2 = \frac{\int\sum_{n=1}^{N} |V_n(f)|^2\delta^2\phi_n(f)df}{\int\sum_{n=1}^{N} |V_n(f)|^2df}$$

σ_ρ^2 can be thought of as the variance in normalized relative amplitude response expressed as the square of a dimensionless ratio and σ_ϕ^2 as the variance in relative phase response ϕ, expressed in (radians^2), distributed according to the power $|V_n(f)|^2$ in the receiver output lines.

END

FILMED

4-84

DTIC