AD-A095 387 NAVAL RESEARCH LAB WASHINGTON DC F/G 11/6
DEFORMATION MICROSTRUCTURE DEVELOPED DURING FATIGUE CRACK PROPA--ETC(U)
FEB 81 D J MICHEL, H H SMITH
UNCLASSIFIED NRL-MR-4452 NL

1 OF 1
AD
A095 387

END
DATE
FILMED
4-81
DTIC

LEVEL

DTIC
ELECTE
FEB 22 1984
S D
E

February 22, 1984

SECURITY CLASSIFICATION OF THIS PAGE (When Data Entered)

REPORT DOCUMENTATION PAGE

READ INSTRUCTIONS BEFORE COMPLETING FORM

1. REPORT NUMBER
NRL Memorandum Report 4452

2. GOVT ACCESSION NO.
AD-A095387

3. RECIPIENT'S CATALOG NUMBER

4. TITLE (and Subtitle)
DEFORMATION MICROSTRUCTURE DEVELOPED DURING FATIGUE CRACK PROPAGATION IN TYPE 316 STAINLESS STEEL AT ~~593°C~~ 593 C.

5. TYPE OF REPORT & PERIOD COVERED
Interim report on a continuing NRL problem.

6. PERFORMING ORG. REPORT NUMBER

7. AUTHOR(s)
D. J. Michel [redacted] H. H. Smith

8. CONTRACT OR GRANT NUMBER(s)
NRL-MR-4452

9. PERFORMING ORGANIZATION NAME AND ADDRESS
Naval Research Laboratory
Washington, DC 20375

10. PROGRAM ELEMENT, PROJECT, TASK AREA & WORK UNIT NUMBERS
RR022 41/5426; DE-AI05-80R-20352; 63-1062-0-1; 63-1064-0-1

11. CONTROLLING OFFICE NAME AND ADDRESS
Office of Naval Research, Arlington, VA 22217
and Department of Energy, Washington, DC 20545

12. REPORT DATE
Feb[redacted]81

13. NUMBER OF PAGES
13

14. MONITORING AGENCY NAME & ADDRESS (if different from Controlling Office)

15. SECURITY CLASS. (of this report)
UNCLASSIFIED

15a. DECLASSIFICATION/DOWNGRADING SCHEDULE

16. DISTRIBUTION STATEMENT (of this Report)

Approved for public release; distribution unlimited.

17. DISTRIBUTION STATEMENT (of the abstract entered in Block 20, if different from Report)

18. SUPPLEMENTARY NOTES

19. KEY WORDS (Continue on reverse side if necessary and identify by block number)

Radiation
Irradiation
Stainless steels
Radiation effects
Microstructure
Fatigue
Crack propagation
High temperature

20. ABSTRACT (Continue on reverse side if necessary and identify by block number)

The failure modes and dislocation substructure produced by fatigue crack propag ion at 593 C in fast neutron irradiated and unirradiated Type 316 stainless steel were studied. The results i licate that the dislocation substructure produced by the crack propagation during both cyclic and combined cycli static loading conditions was directly dependent on the extent of matrix deformation as reflected by the mode o crack propagation. The results are consistent with the activation of either grain boundary or matrix mechanisms for deformation, as related to loading conditions, at the temperature investigated. The influence of neutron irradiation was to alter the operation of the basic deformation mechanisms by the increased difficulty of matrix dislocation motion resulting from the irradiation-induced defect production.

DD FORM 1 JAN 73 1473 EDITION OF 1 NOV 65 IS OBSOLETE
S/N 0102-LF-014-6601

251950

SECURITY CLASSIFICATION OF THIS PAGE (When Data Entered)

CONTENTS

INTRODUCTION 1

EXPERIMENTAL PROCEDURES 1

RESULTS 2

DISCUSSION 7

SUMMARY AND CONCLUSIONS 10

ACKNOWLEDGMENTS 10

REFERENCES 11

Accession For
NTIS GRA&I ☒
DTIC TAB ☐
Unannounced ☐
Justification
By
Distribution/
Availability Codes
Avail and/or
Dist Special
A

DEFORMATION MICROSTRUCTURE DEVELOPED DURING FATIGUE CRACK PROPAGATION IN TYPE 316 STAINLESS STEEL AT 593°C

INTRODUCTION

A knowledge of the fatigue crack propagation performance of metallic structural materials is of foremost importance to component design and safety considerations. Since it is well known that fatigue crack propagation is the result of plastic deformation in ductile materials, the relationship between the crack propagation and the deformation has been studied both theoretically (1,2) and experimentally (3,4) in terms of the "plastic zone" concept. Other experimental studies (5-9) have shown that fatigue crack propagation produces a dislocation substructure which is related to the effective stress level and the crack length. While the majority of these investigations have been conducted for specimens tested at ambient temperature, few studies have been directed toward the understanding of the deformation microstructure produced by fatigue crack propagation at elevated temperatures and only one study is known for neutron irradiated material (10).

The purpose of this report is to present the results from a survey of the failure modes and dislocation substructure produced by fatigue crack propagation at 593°C in fast neutron irradiated and unirradiated Type 316 stainless steel. The microstructural results complement the previously reported crack propagation test results (11) and show the relationship between the deformation substructure and the mode of crack propagation.

EXPERIMENTAL PROCEDURES

The Type 316 stainless steel plate materials, specimen design and preparation, test conditions, and crack propagation test results have been reported in detail elsewhere (11).

Briefly, 12.7-mm (0.5-in.)-thick single-edge-notched (SEN) cantilever specimens were prepared from the plate material such that the crack propagation direction was perpendicular to the plate rolling direction. To produce the 20 percent cold worked condition in certain specimens, the plate material used to prepare these specimens was given a 20 percent reduction in thickness by rolling at ambient temperature. To investigate the effects of neutron irradiation, SEN center sections, 55.9 mm by 63.5 mm (2.2 in. x 2.5 in.) were irradiated in an NRL subassembly in EBR-II to a calculated fast neutron fluence of 2.2×10^{22} n/cm^2 (>0.1 MeV) at the estimated reactor sodium temperature of 427°C (800°F). After irradiation, end tabs were welded in-cell to the center sections to produce the final SEN specimen configuration for testing. All specimens, unirradiated and irradiated, were tested at 427 and 593°C (800 and 1100°F) in laboratory air using a zero-to-tension loading cycle at 0.17 Hz (10 cpm) to a constant maximum load. Hold time effects were investigated for certain tests by maintaining the maximum tensile load constant for selected time periods during each cycle.

Manuscript submitted December 12, 1980.

Scanning electron microscopy (SEM) was used to investigate the crack propagation mode of selected specimens tested at 593°C. Specimen sections containing one fracture surface were prepared from both the unirradiated and the irradiated fatigue specimens. The unirradiated specimen sections were examined using a Coates and Welter Cwikscan microscope. The irradiated specimen sections were examined using an I.S.I. Super II microscope modified for remote hot cell operation. All fracture surfaces were examined in the high voltage operating range at the centerline of the fracture (mid-thickness of the specimen) starting at the root of the machined notch.

Transmission electron microscopy (TEM) foils were prepared from selected fatigue specimens tested at 593°C by removing 3-mm (0.118-in.) diameter cylindrical sections, whose axes were perpendicular to the fracture surface (parallel to X-direction in Fig. 1). The sections were taken at the mid-thickness of the selected specimens. A low speed water-cooled, cut-off-wheel was used to remove 0.25-mm (0.010-in.) thick slices from each cylindrical section beginning at the fracture surface (X = 0). The slices were thinned to perforation using a conventional twin-jet electropolishing technique. The resulting thin foils were examined in a JEM-200A transmission electron microscope operated at 200 kV. The analysis of the TEM results was conducted according to previously detailed procedures (12).

RESULTS

The fatigue crack propagation results previously reported for the specimens used in this study (11) show that the effects of neutron irradiation and hold times at 427°C did not significantly influence the crack propagation behavior of the annealed and 20 percent cold worked steel. At 593°C, however, both hold time and irradiation were found to increase the crack propagation rates for both material conditions.

The SEM results for the unirradiated, annealed and cold worked Type 316 stainless steel tested at 593°C are summarized in Fig. 2. The results show that the crack propagation mode was primarily transgranular for the zero hold time test conditions, Figs. 2a and 2c, and was entirely intergranular for the one minute hold time conditions, Figs. 2b and 2d, as previously reported (13). The micrographs for the one minute hold time specimens also show distinct evidence for secondary intergranular crack formation.

The crack propagation mode of the annealed and cold worked, irradiated Type 316 stainless steel tested at 593°C is illustrated in Fig. 3. For the annealed steel, the crack propagation mode was intergranular for both the zero and the one minute hold times, Figs. 3a and 3b. The specimens of the cold worked, irradiated steel indicate a tendency toward a mixed failure mode, Figs. 3c and 3d, and the microscopic features are seen to be distinctly different from those of the annealed specimens. Specifically, these features suggest that processes such as slip band or twin formation have produced localized regions of transgranular crack propagation in addition to those of an intergranular nature.

Transmission electron microscope studies of uniform and cellular dislocation substructure were conducted for both the unirradiated and the neutron irradiated fatigue crack propagation specimens tested at 593°C only. The TEM results are summarized in Table 1. The results reveal measurable dislocation cell formation in only the unirradiated, cold worked specimens. For these specimens, the dislocation cell diameter was found to increase with hold time for the locations indicated. It was also found that the values for uniform dislocation density were elevated above the

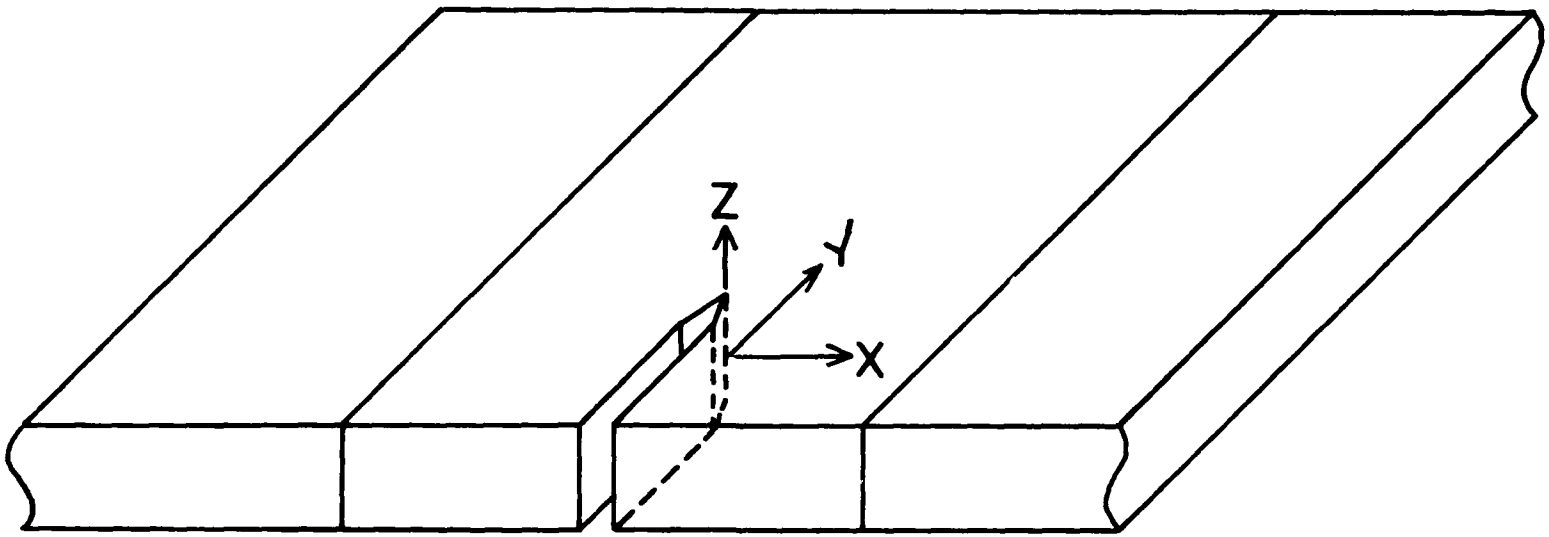

Fig. 1 - Schematic representation of the single-edge-notch cantilever fatigue specimen and the orthogonal coordinate system used to define the location of post-test transmission electron microscopy (TEM) specimens.

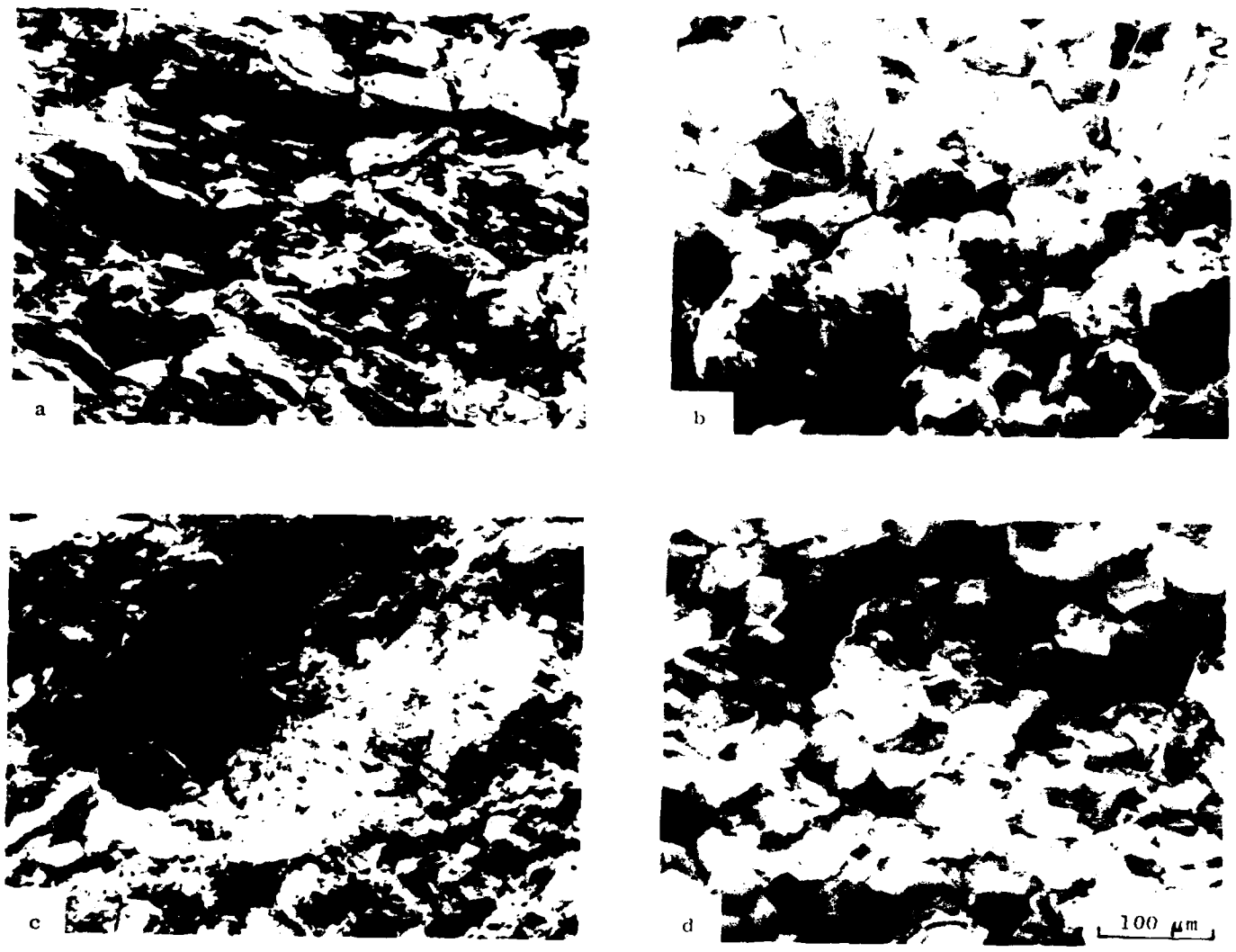

Fig. 2 - Scanning electron micrographs of the crack propagation mode of annealed and 20 percent cold worked, unirradiated Type 316 stainless steel tested at 593°C: (a) annealed, zero hold time; (b) annealed, one minute hold time; (c) 20 percent cold worked, zero hold time; (d) 20 percent cold worked, one minute hold time.

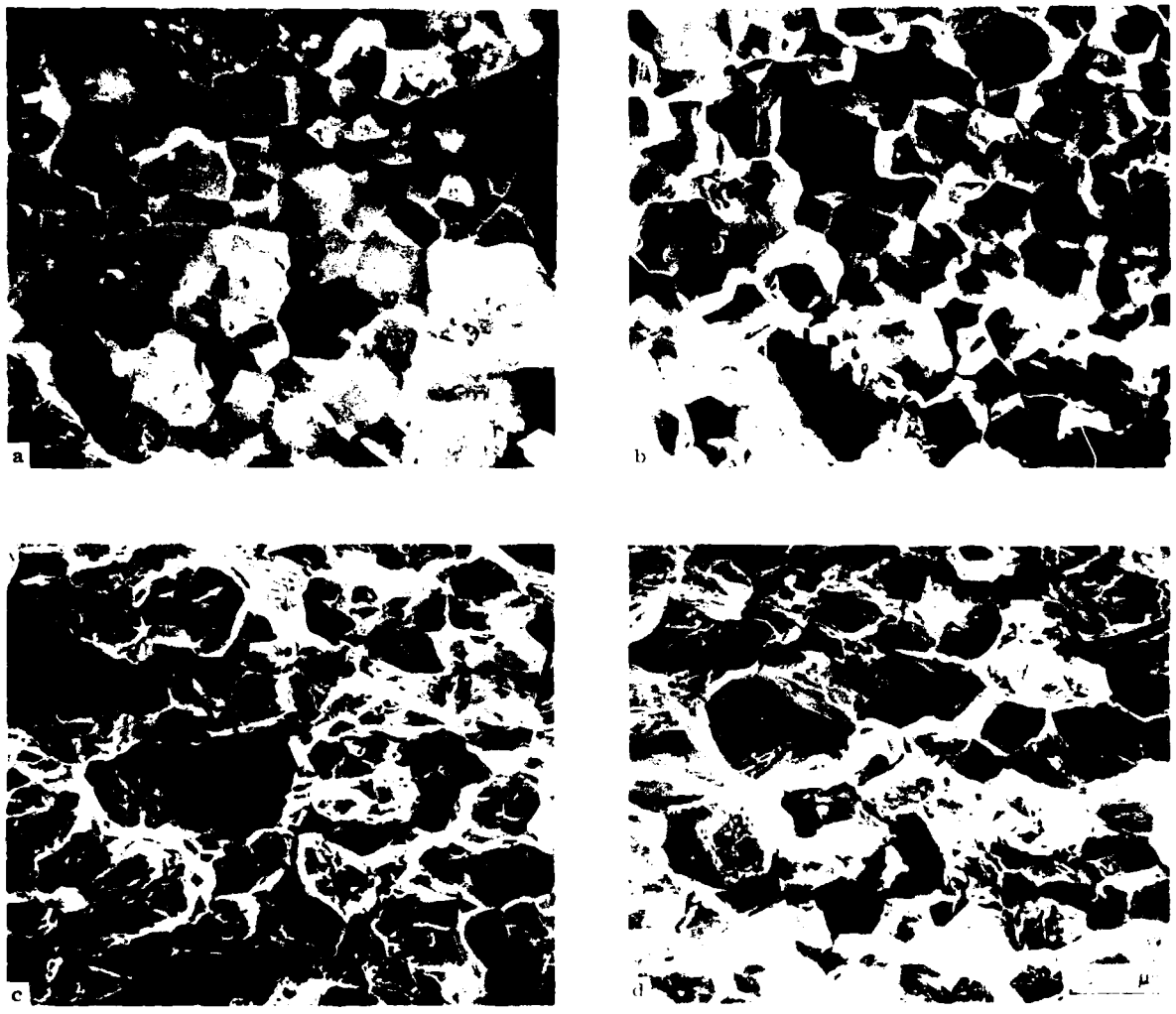

Fig. 3 - Scanning electron micrographs of the crack propagation mode of annealed and 20 percent cold worked, irradiated Type 316 stainless steel tested at 593°C: (a) annealed, zero hold time; (b) annealed, one minute hold time; (c) 20 percent cold worked, zero hold time; (d) 20 percent cold worked, one minute hold time.

Table 1
Summary of Microstructural Results for Type 316 Stainless Steel Specimens Tested at 593°C

Material Condition	Neutron Fluence (n/cm^2, >0.1 MeV)	Hold Time (minutes)	TEM Specimen Location x (mm)	TEM Specimen Location y (mm)	Mean Dislocation Cell Diameter (μm)	Dislocation Density* (cm/cm^3)	Stress Intensity Factor at x = 0 and value of Y ΔK ($MPa\sqrt{m}$)	Predominant Crack Propagation Mode
Solution Annealed	0	0	0.42	1.84	-	2.0×10^{10}	18.0	Transgranular
			0.85	1.84	-	1.4×10^{10}		
	0	1	0.38	1.84	-	1.7×10^{10}	18.0	Intergranular
			1.02	1.84	-	1.3×10^{10}		
	1.2×10^{22}	0	0.51	1.75	-	1.1×10^{10}	19.0	Intergranular
			1.07	1.75	-	9.7×10^{9}		
	1.4×10^{22}	1	0.64	1.75	-	6.7×10^{9}	19.0	Intergranular
			1.19	1.75	-	5.5×10^{9}		
20% Cold Worked	0	0	0.41	1.84	0.26	3.1×10^{10}	19.0	Transgranular
			0.76	1.84	-	2.6×10^{10}		
	0	1	0.43	1.84	0.45	2.7×10^{10}	18.7	Intergranular
			1.07	1.84	-	2.0×10^{10}		
	1.1×10^{22}	0	0.46	1.75	-	2.6×10^{10}	18.0	Mixed (Intergranular + Transgranular)
			1.02	1.75	-	1.7×10^{10}		
	1.7×10^{22}	1	0.43	1.84	-	2.2×10^{10}	18.2	Mixed (Intergranular + Transgranular)
			0.99	1.84	-	1.4×10^{10}		

*Dislocation density of unirradiated, unstressed matrix was $1 \times 10^9 cm/cm^3$.

unstressed, unirradiated base level of 1×10^9 cm/cm^3 for all conditions and locations measured.

Figures 4 and 5 illustrate the substructures observed for the annealed and cold worked, unirradiated and irradiated specimens, respectively. In Figs. 4 (c) and (d), the voids and loops typical of fast neutron irradiated Type 316 stainless steel are clearly evident. Although similar features are not as evident in the cold worked irradiated micrographs of Figs. 5 (c) and (d), both faulted loops and defect cluster formation were observed in the cold worked specimens.

DISCUSSION

The SEM and TEM results were performed to show the influence of the irradiation and loading conditions on the crack propagation mode and dislocation substructure of the annealed and cold worked steel at 593°C. Comparison of Figs. 2 and 3 illustrates that the modes of crack propagation were more intergranular in character for the irradiated specimens, particularly for the zero hold time loading condition. These changes in crack propagation mode were reflected by the higher crack propagation rates previously observed for these irradiated specimens (11). Inspection of Table 1 also indicates that the substructure results are consistent with the fractographic evidence. In particular, the substructure results show that the matrix dislocation density of the irradiated specimens was decreased relative to the equivalent unirradiated specimens. Since it is well known that the square root of the matrix dislocation density is directly proportional to the matrix stress level (12), the dislocation density results demonstrate that the reduced level of matrix deformation in the irradiated specimens was directly associated with the increased tendency toward an intergranular crack propagation mode.

Previous studies of the authors (10) have shown that dislocation cells were observed in unirradiated, annealed crack propagation specimens within 1 mm of the crack surface, but not in irradiated specimens. Comparison of the locations surveyed in the present study, Table 1, for the unirradiated, annealed material with those for specimens previously examined (10) shows that both groups of TEM specimens were taken at Y locations (Fig. 1) with approximately the same value. However, the dislocation density for the previous study was considerably higher and the X location was approximately one-third of that in the present study. This indicates that the TEM specimens for the unirradiated, annealed condition in the present study were taken at X locations beyond which cell formation would be expected based on the previous work. For the unirradiated, cold worked specimens, the lower dislocation density and the larger dislocation cell size observed for the one minute hold time specimen, when compared with the zero hold time specimen for nearly identical X-Y locations, suggests that the effective matrix stress level was lower for this specimen than for the zero hold time specimen.

The results obtained in this study support the previous observations that the spatial extent of the deformation produced by crack propagation is localized to a region within approximately 1 mm of the crack surface. The present results also show that, for the conditions examined, the dislocation substructure produced by the crack propagation was directly dependent on the matrix deformation as reflected by the mode of crack propagation. Since the specimens examined in the present study were tested at a temperature which is approximately 0.5 T_m for 316 stainless steel, the operation of either intergranular or transgranular crack propagation modes, dependent on loading conditions, was entirely consistent with the activation of either grain

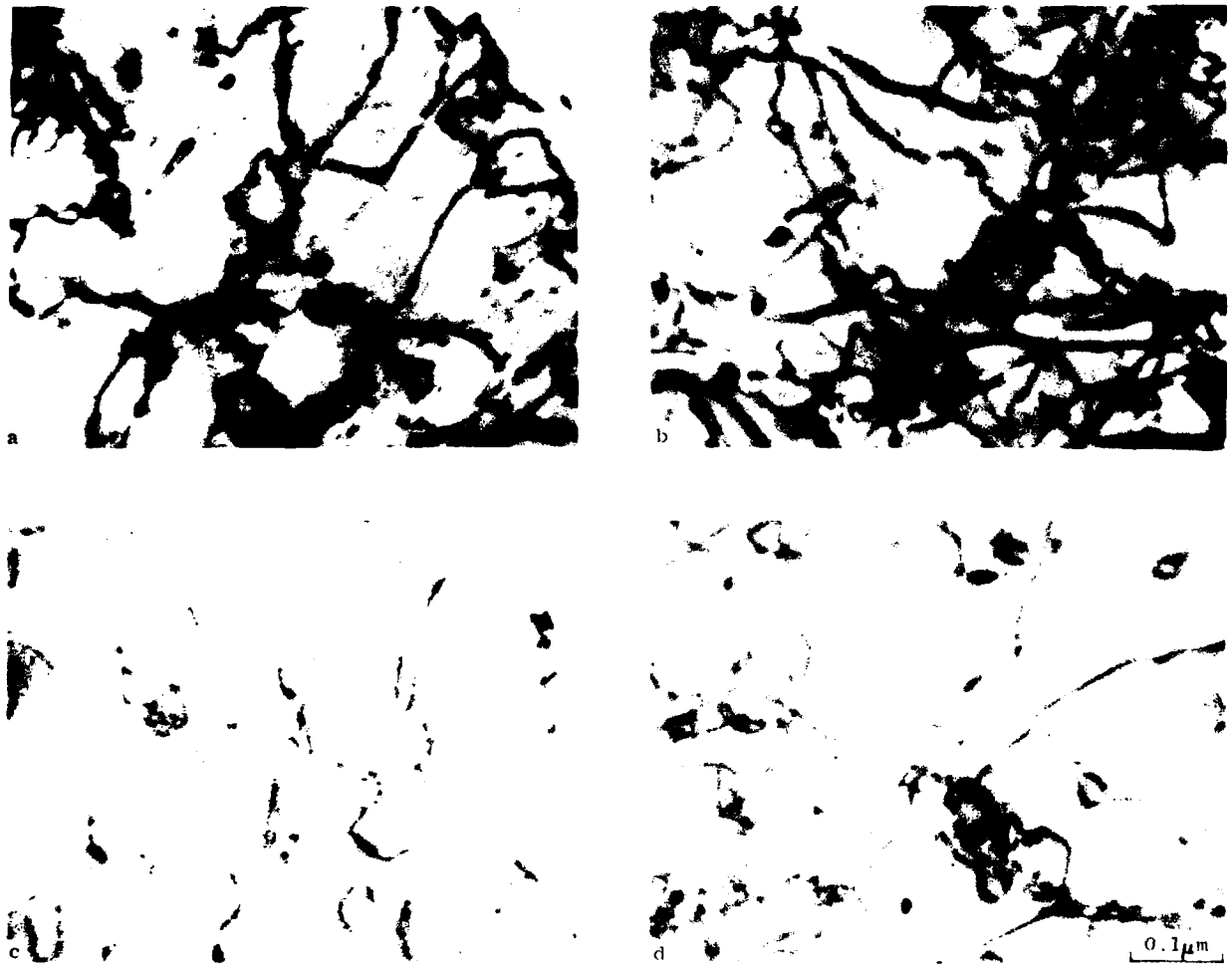

Fig. 4 - Transmission electron micrographs of the dislocation substructure in annealed Type 316 stainless steel tested at 593°C: (a) unirradiated, zero hold time; (b) unirradiated, one minute hold time; (c) irradiated (1.2×10^{22} n/cm^2), zero hold time; (d) irradiated (1.4×10^{22} n/cm^2), one minute hold time.

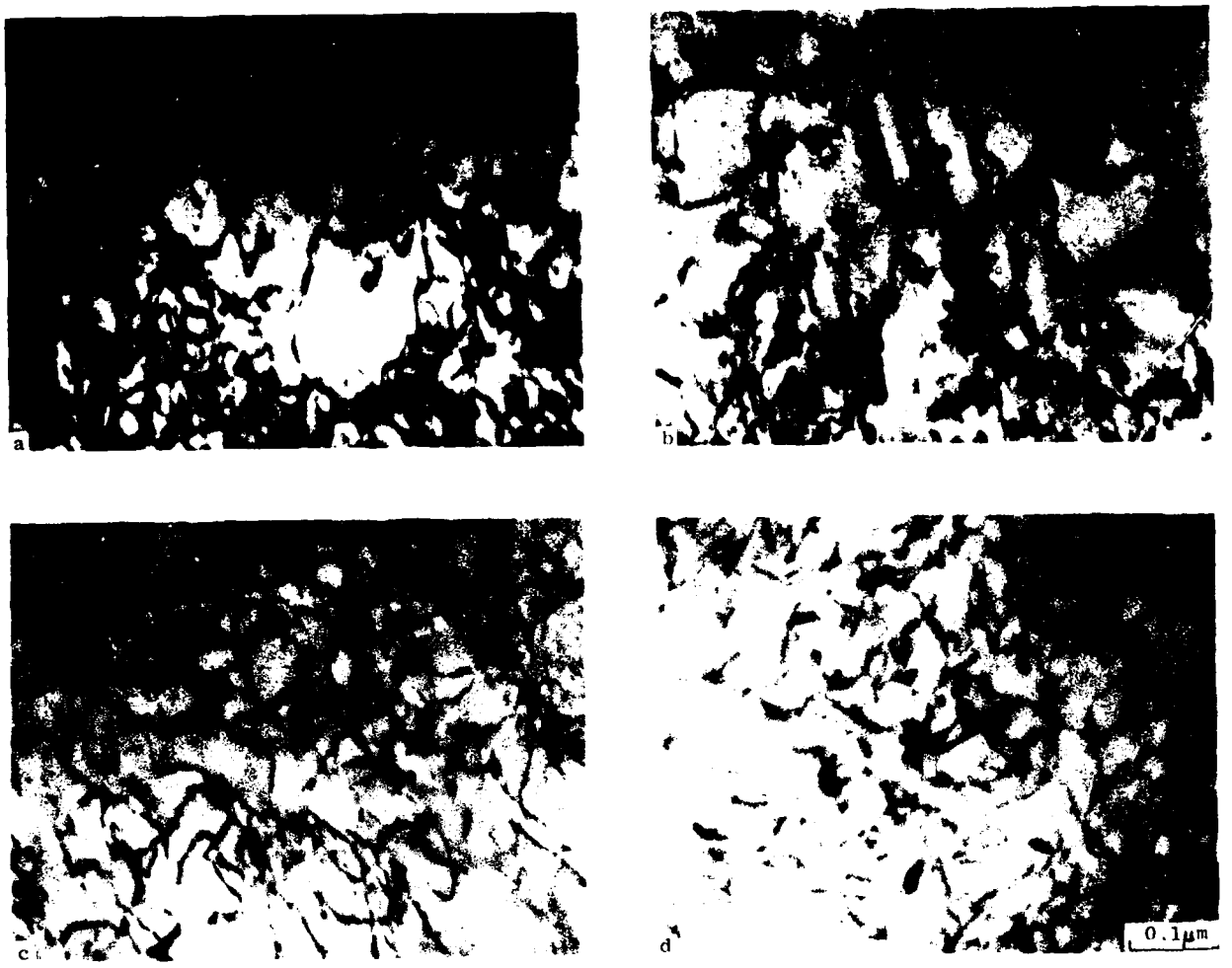

Fig. 5 - Transmission electron micrographs of the dislocation substructure in 20 percent cold worked Type 316 stainless steel tested at 593°C: (a) unirradiated, zero hold time; (b) unirradiated, one minute hold time; (c) irradiated (1.1×10^{22} n/cm^2), zero hold time; (d) irradiated (1.7×10^{22} n/cm^2), one minute hold time.

boundary or matrix deformation mechanisms. The observed transition to intergranular crack propagation or, for the cold worked material, crack propagation along slip bands or twins, following neutron irradiation reflects the increased resistance to matrix dislocation motion produced by the irradiation-induced defects as demonstrated by the reduced dislocation density level of these specimens.

SUMMARY AND CONCLUSIONS

The dislocation substructure and failure modes were examined for annealed and cold worked, unirradiated and neutron irradiated, Type 316 stainless steel subsequent to fatigue crack propagation testing at 593°C. The following conclusions are drawn from the results:

1. The dislocation density produced by fatigue crack propagation in unirradiated, annealed and cold worked Type 316 stainless steel at 593°C is directly dependent on the matrix deformation as reflected by the mode of crack propagation.

2. The effect of neutron irradiation is to hinder matrix dislocation motion, as evidenced by reduced dislocation densities, thereby reducing fracture ductility and increasing crack growth rates.

3. The absence of dislocation cell formation at the locations surveyed, except for the unirradiated, cold worked steel, confirms that the spatial extent of the deformation produced by crack propagation at 593°C is localized to within 1 mm of the crack propagation path.

4. The observation of larger dislocation cells, a lower dislocation density, and an intergranular failure mode for the unirradiated cold worked specimen tested with a one minute hold time at 593°C, when compared with the specimen with a zero hold time, implies that the effective matrix stress level produced by an intergranular crack propagation mode is lower than for transgranular crack propagation.

ACKNOWLEDGMENTS

This research was supported by the Office of Naval Research and the Department of Energy. The authors acknowledge with appreciation the assistance of J. T. Atwell in the experimental phases of this work.

REFERENCES

1. P. C. Paris, "The Fracture Mechanics Approach to Fatigue," in Fatigue - An Interdisciplinary Approach, Syracuse University Press, New York, 1964 p. 107.

2. J. R. Rice, "Mechanics of Crack Tip Deforamtion and Extension by Fatigue," ASTM STP 415, American Society for Testing and Materials, 1967, pp. 247-309.

3. G. T. Hahn, R. G. Hoagland and A. R. Rosenfield, "Local Yielding Attending Fatigue Crack Growth," Metallurgical Transactions, Vol. 3, 1972, pp. 1189-1202.

4. Y. Iino, "Accumulated Plastic Zone Around Fatigue Crack in Type 304 Stainless Steel," Metal Science, Vol. 10, 1976, p. 159.

5. A. H. Purcell and J. Weertman, "Transmission Electron Microscopy of the Crack Tip Region of Fatigued Copper Single Crystals," Metallurgical Transactions, Vol. 4, 1973, pp. 349-353.

6. A. H. Purcell and J. Weertman, "Crack Tip Area in Fatigued Copper Single Crystals," Metallurgical Transactions, Vol. 5, 1974, pp. 1805-1809.

7. P. Lukas and M. Klesnil, "Dislocation Structures in Fatigued Single Crystals of Cu-Zn System," Phys. Stat. Sol. (a), Vol. 5, 1971, pp. 247-258.

8. S. Taira and K. Tanaka, "Study of Fatigue Crack Propagation by X-Ray Diffraction Approach," Engineering Fracture Mechanics, Vol. 4, 1972, pp. 925-938.

9. K. Rajan, B. Ramaswami and S. M. L. Sastry, "The Plastic Zone in Stage I Crack Growth During Fatigue Deformation of Copper Single Crystals," Metallurgical Transactions, Vol. 6A, 1975, p. 1959-1962.

10. D. J. Michel and H. H. Smith, "Observations of the Dislocation Substructure Produced by Elevated Temperature Fatigue Crack Propagation in Type 316 Stainless Steel," Engineering Fracture Mechanics, Vol. 9, 1977, pp. 925-930.

11. D. J. Michel, H. H. Smith and H. E. Watson, "Effect of Hold Time on Elevated Temperature Fatigue Crack Propagation in Fast Neutron Irradiated and Unirradiated Type 316 Stainless Steel," in Structural Materials for Service at Elevated Temperatures in Nuclear Power Generation, A.O. Schaefer, ed., American Society of Mechanical Engineers, MPC-1, 1975, pp. 167-190.

12. D. J. Michel, J. Moteff and A. J. Lovell, "Substructure of Type 316 Stainless Steel Deformed in Slow Tension at Temperatures Between 21° and 816°C," Acta Metallurgica, Vol. 21, 1973, pp. 1269-1277.

13. D. J. Michel and H. H. Smith, "Effect of Hold Time and Thermal Aging on Elevated Temperature Fatigue Crack Propagation in Austenitic Stainless Steels," NRL Memorandum Report 3627, Naval Research Laboratory, Oct. 1977.

LMED

8