AD 669676

USAAVLABS TECHNICAL REPORT 67-81

EVALUATION OF THE DUST CLOUD GENERATED BY HELICOPTER ROTOR DOWNWASH

By

Sheridan J. Rodgers

March 1968

U. S. ARMY AVIATION MATERIEL LABORATORIES
FORT EUSTIS, VIRGINIA

CONTRACT DA 44-177-AMC-289(T)

MSA RESEARCH CORPORATION

EVANS CITY, PENNSYLVANIA

D D C
MAY 27 1968

This document has been approved for public release and sale; its distribution is unlimited.

Reproduced by the
CLEARINGHOUSE
for Federal Scientific & Technical
Information Springfield Va 22151

35

DEPARTMENT OF THE ARMY
U. S. ARMY AVIATION MATERIEL LABORATORIES
FORT EUSTIS, VIRGINIA 23604

This report, entitled "Evaluation of the Dust Cloud Generated by Helicopter Rotor Downwash", has been prepared by MSA Research Corporation in compliance with the terms of Contract DA 44-177-AMC-289(T). It presents the results of an experimental program conducted to define the contaminant cloud generated by a helicopter hovering over three sandy and dusty terrains.

The original intent of the program was to use both single- and tandem-rotor helicopters as test vehicles in order to make appropriate comparisons. Due to higher priority requirements, a suitable single-rotor helicopter could not be made available. Therefore, the H21 tandem-rotor helicopter alone was used.

It is believed that the results of this program provide interesting and needed information for those involved in the design, testing, and use of helicopter propulsion systems and related components. Quantities and sizes of particular matter which must be coped with in aircraft turbine applications are described.

The conclusions and recommendations presented in the report are concurred in by this Command.

Disclaimers

The findings in this report are not to be construed as an official Department of the Army position unless so designated by other authorized documents.

When Government drawings, specifications, or other data are used for any purpose other than in connection with a definitely related Government procurement operation, the United States Government thereby incurs no responsibility nor any obligation whatsoever; and the fact that the Government may have formulated, furnished, or in any way supplied the said drawings, specifications, or other data is not to be regarded by implication or otherwise as in any manner licensing the holder or any other person or corporation, or conveying any rights or permission, to manufacture, use, or sell any patented invention that may in any way be related thereto.

Disposition Instructions

Destroy this report when no longer needed. Do not return it to the originator.

Project 1V021701A047
Contract DA 44-177-AMC-289(T)
USAAVLABS Technical Report 67-81
March 1968

EVALUATION OF THE DUST CLOUD GENERATED BY HELICOPTER ROTOR DOWNWASH

Final Report

By
Sheridan J. Rodgers

Prepared by

MSA RESEARCH CORPORATION
Evans City, Pennsylvania

for

U. S. ARMY AVIATION MATERIEL LABORATORIES
FORT EUSTIS, VIRGINIA

This document has been approved for public release and sale; its distribution is unlimited.

ABSTRACT

The dust cloud generated by a tandem-rotor H-21 helicopter was studied as a function of type of soil, hover height and disc loading. A total of 98 tests were made, and three different test sites were used. Samples were collected at 25 locations on the helicopter. Analyses were made for dust content and particle size distribution.

Average dust concentrations at the area of highest dust density, i.e., at rotor blade overlap, were:

Hover Height (ft)	Sampling Site (mg/cu ft)		
	Phillips DZ, Yuma	Vehicle Dust Course, Yuma	Lee DZ Ft. Benning
1	12.4	15.5	18.4
10	18.5	18.1	17.6
75	5.3	13.6	3.0

The highest concentrations were measured at the site of rotor blade overlap, and the lowest concentrations were found beneath the rotor hubs.

The maximum particle size decreased with increasing elevation. No particles over 500 μ were found at any elevation.

Dust concentrations of 40 mg/cu ft were measured during takeoff and approach maneuvers. With another helicopter hovering in the immediate area, concentrations of 64 mg/cu ft were measured.

FOREWORD

This report was prepared by MSA Research Corporation under U. S. Army Aviation Materiel Laboratories Contract No. DA 44-177-AMC-289(T). The contract was administered under the direction of Mr. Joel Terry of USAAVLABS as project engineer.

The report is a summary of work conducted during the period October 1965 to July 1967.

Sheridan J. Rodgers was the project engineer for MSA Research Corporation. Guy Kennedy of MSA Research Corporation actively participated in the design and fabrication of the test equipment. Messrs. J. A. Mangold, J. J. White and W. A. Miles participated in the field tests.

Particle size and weight analyses were performed by U. S. Army Waterways Experiment Station under the direction of Phillip Vedros.

The helicopter crew was supplied by USAAVLABS.

TABLE OF CONTENTS

	Page
ABSTRACT	iii
FOREWORD	v
LIST OF ILLUSTRATIONS	viii
LIST OF TABLES	ix
INTRODUCTION	1
OBJECTIVES OF THE PROGRAM	1
Type of Craft	2
Type of Soil	2
Disc Loading	4
Hover Height	4
Wind Conditions	4
APPARATUS	4
Small-Scale Samplers	5
12,000 CFM Sampling System	10
Analysis of Dust	10
TEST PROGRAM	11
RESULTS AND DISCUSSION	14
Small-Scale Tests	14
Large-Scale Tests	21
Visibility	23
Effect of Another Helicopter Hovering Nearby	27
Effect of Takeoff and Landing	27
CONCLUSIONS AND RECOMMENDATIONS	27
REFERENCES CITED	32
APPENDIXES	
I. Summary of Test Conditions	33
II. Summary of Results - Small-Scale Tests	36
III. Summary of Results - Large-Scale Tests	114
DISTRIBUTION	125

LIST OF TABLES

Table		Page
I	Dust Concentration, Phillips Drop Zone, Yuma Proving Grounds	15
II	Dust Concentration, Vehicle Dust Course, Yuma Proving Grounds	16
III	Dust Concentration, Lee Drop Zone, Ft. Benning, Ga.	17
IV	Maximum Dust Content as a Function of Location	22
V	Maximum Dust Content Measured With 12,000 CFM Sampler	21
VI	Summary of Ft. Benning Runs	33
VII	Summary of Vehicle Dust Course Runs	34
VIII	Summary of Phillips Drop Zone Runs	35

INTRODUCTION

Helicopters operating over sandy or dusty soil have experienced significant reduction in the lifetime of turbine engines, rotor blades and other exposed components. Airborne dust generated as a result of rotor blade downwash and delivered to these critical components by the recirculating air pattern around the helicopter is responsible for this erosion. The dust distribution around the helicopter is a function of number of rotors, disc loading, hover height and physical characteristics of the soil.

Much of the effort to date in defining the characteristics of the recirculating dust cloud has been either laboratory scale experiments[1] or mathematical treatment of the dust pattern[2]. Some work has been done during actual hovering over sandy soil[3,4]; however, no comprehensive study had been made to evaluate dust concentration and particle size as a function of the important parameters. Such data are needed if realistic specifications are to be established for turbine engine air cleaners and other critical components.

OBJECTIVES OF THE PROGRAM

The objectives of the program were to determine dust concentration and dust particle size, and to equate pilot visibility with the dust cloud characteristics. The initial program included the following considerations:

1. Type of craft
   a. Single rotor (H-34)
   b. Tandem rotor (H-21)

2. Type of soil
   a. Phillips Drop Zone, Yuma Proving Grounds, Arizona
   b. Vehicle Dust Course, Yuma Proving Grounds, Arizona
   c. Lee Drop Zone, Ft. Benning, Ga.
   d. Eglin Air Force Base, Florida
   e. Ft. Sill, Oklahoma

3. Disc loading
   a. Low
   b. Medium
   c. High

4. Hover height
   a. 1 foot
   b. 10 feet
   c. 75 feet

Type of Craft

Because of the severe environment, it was decided that helicopters powered by reciprocating engines rather than turbine engines should be used. An H-21 was selected as typical of a tandem-rotor craft, and an H-34 was selected as typical of a single-rotor craft. The maximum disc loadings of the H-21 and H-34 are compared below with a typical-tandem rotor and single-rotor turbine powered helicopter:

Model	Normal Gross Weight (lb)	Rotor Diameter (ft)	Disc Loading (lbs/ft^2)
H-21	13,500	44	4.4
H-47	33,000	59	6.0
H-34	13,000	56	5.3
UH-1	8,500	44	5.6

An H-21 was made available but an H-34 could not be procured for the program; hence, all data in this report are based on the characteristic distribution associated with a tandem-rotor craft.

Type of Soil

Particle size distribution of soil samples at the test sites is shown in Figure 1. All soil samples were normalized to a maximum of 500 μ since particles larger than this were not recirculated. Phillips Drop Zone, Yuma Proving Grounds, Arizona, had the most coarse sand; 50% of the sand was larger than 300 μ. The sand at Lee Drop Zone, Ft. Benning, Ga., was finer than Phillips Drop Zone sand, with 50% of the particles being larger than 220 μ. In two instances, the pilot lost all ground reference at 10 feet. These both occurred at the Vehicle Dust Course.

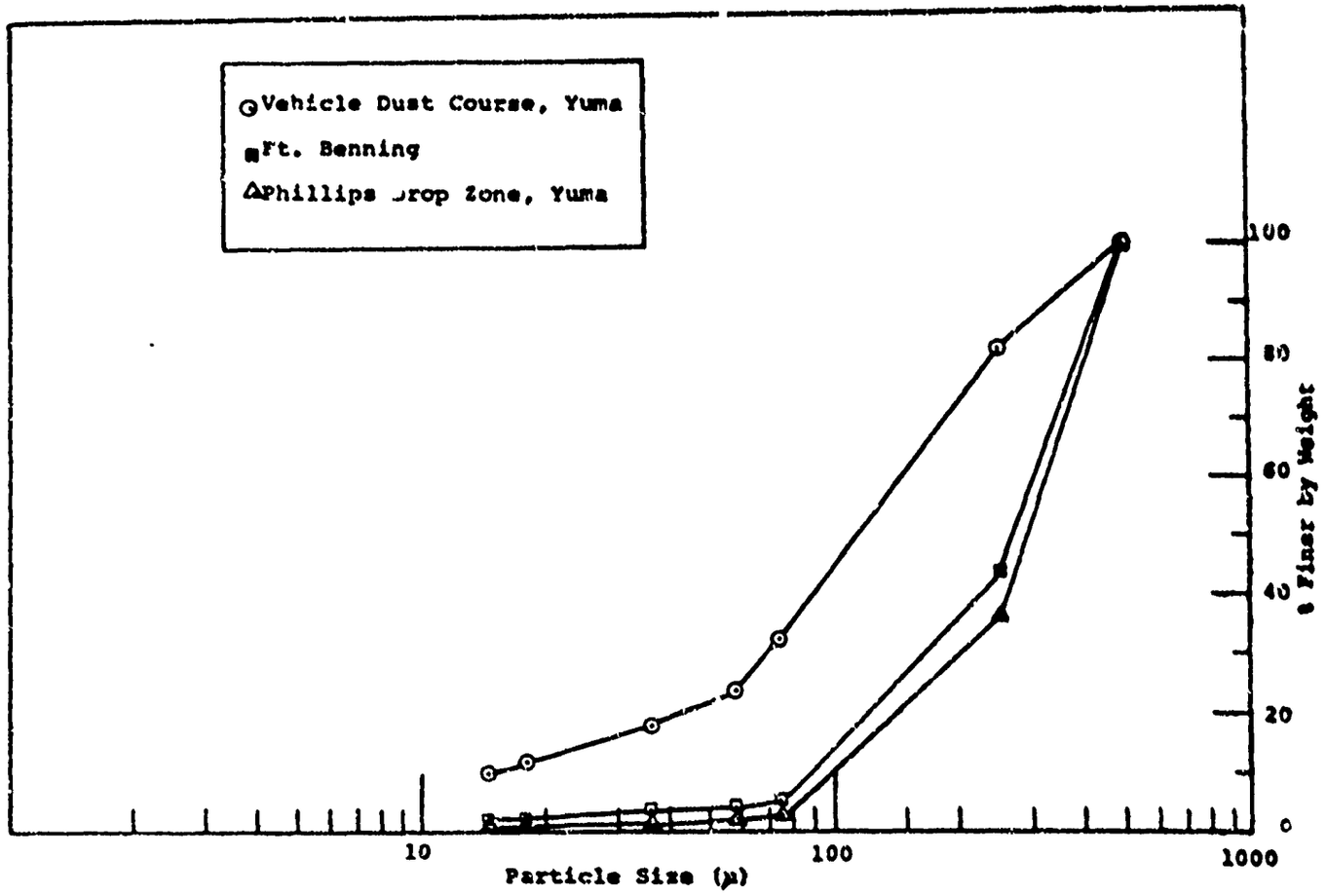

Figure 1. Particle Size Distribution at Test Sites

No analyses were made for particle geometry or chemical composition. If the program had included an evaluation of erosion of structural materials, then such analyses would have been required.

Although the original program specified 5 test sites, only 3 sites were used for testing, due to limited funding. The particle size characteristics of the soils at the 3 test sites were sufficiently different for adequate coverage of the various types of terrain with the data bracketed by a very coarse and extremely fine sand.

Disc Loading

The weight penalty imposed by the sampling equipment, personnel, necessary fuel, and so on, limited the range over which disc loading could be varied. Disc loading could be varied only from 3.5 psf to 4.1 psf or by approximately 15%. The deviation of duplicate runs was larger than this; hence, no correlation could be made with respect to disc loading.

Hover Height

Tests were made at 1, 10 and 75 feet. The 1-foot and 10-foot elevations represented an in-ground-effect condition, and the 75-foot elevation represented an out-of-ground-effect condition. Most of the runs were made at 1-foot and 10-foot elevations. The number of tests made at 75 feet were limited by safety considerations. The 1-foot and 10-foot elevations are typical of many of the missions required of helicopters.

Wind Condition

In most of the tests, the wind velocity was less than 4 mph.

APPARATUS

Small samplers (8.6 cfm) located near the fuselage were used for the initial part of the program. Data from these tests established the dust distribution in the immediate vicinity of the helicopter. The latter part of the program entailed sampling at 12,000 cfm with sampler simulating a turbine engine inlet. Location of the simulated inlet was

selected on the basis of the small-scale sampling results, with the sampling inlet located in some of the tests at the area of highest dust loading and in other tests at the area of lowest dust loading.

Small-Scale Samplers

Figure 2 is a diagram of the small-scale sampler locations. Twelve samplers were mounted on the starboard side and eight samplers were mounted on the port side. Five samplers were located beneath the forward rotor. The 20 samplers on the fuselage were secured to a framework mounted on the fuselage, and the 5 samplers beneath the rotor were secured to a boom extending through the forward cargo door. Stress analyses for the framework and boom were made by Dynasciences Corporation.[5,6] Figures 3 and 4 are photographs showing the small-scale sampler installation; Figure 4 also shows the 12,000-cfm sampler installation.

Each sampling station was fitted with a sampler, an inlet nozzle, an on-off solenoid valve, and an adjustable valve to control flow rate. Cyclone samplers (Aerotek Industries, Design 1, Stainless steel) were used for collection of samples. These were 100% efficient for particles 8 μ-diameter and larger; efficiency decreased to 90% for 3 μ-diameter particles and 50% for 1 μ-diameter particles. The separated dust was collected in polyethylene bottles attached to the samplers, and the bottles were changed after each test.

The inlet nozzles were sized so that the inlet velocity of the air stream matched the downwash velocity. This provided an isokinetic sample at each station.

Figure 5 shows the on-off solenoid valve. Ports were provided in the side of the valve so that, in the standby position, any dust forced into the inlet nozzle did not enter the sampler. In each test, the valves were maintained in a standby position until a stable hover was attained. The valves were powered with two 12-volt DC batteries and were activated from on board the helicopter with an on-off switch.

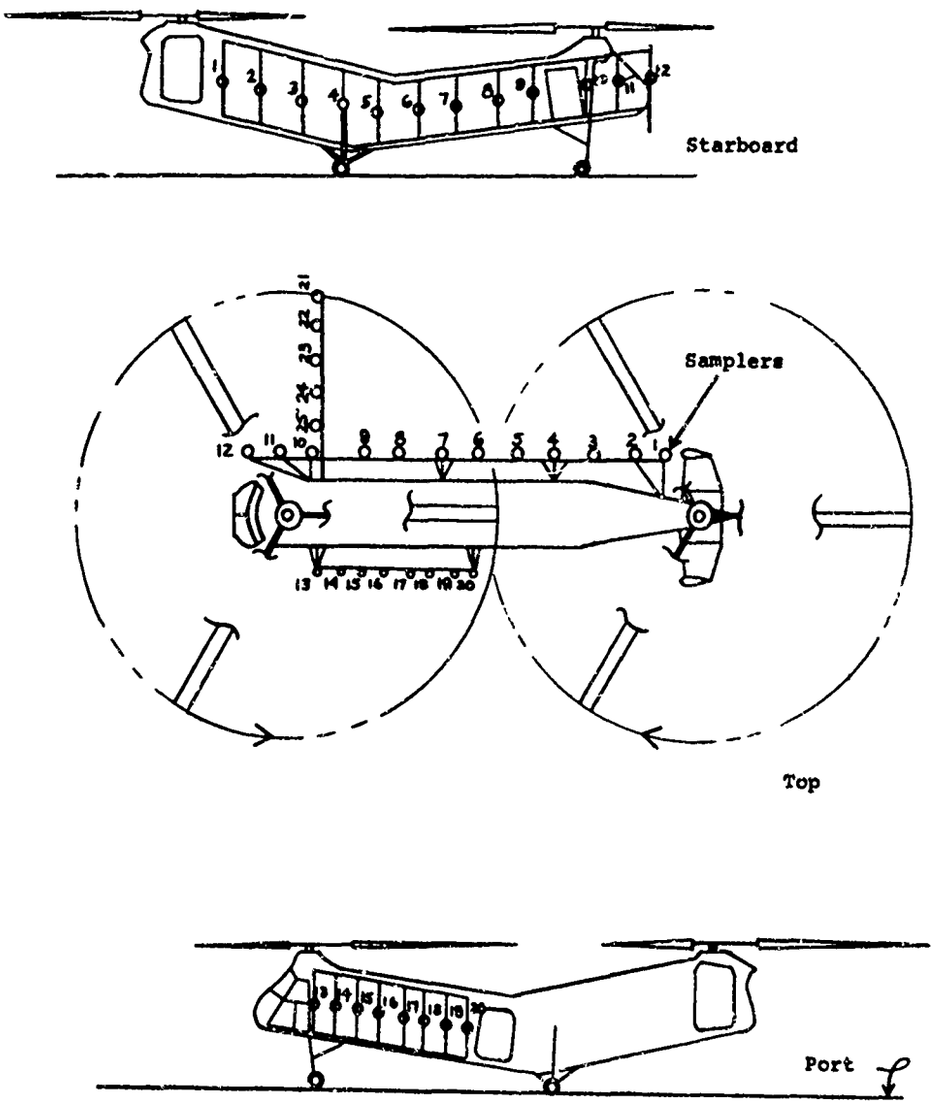

Figure 2. Small-Scale Sampler Locations

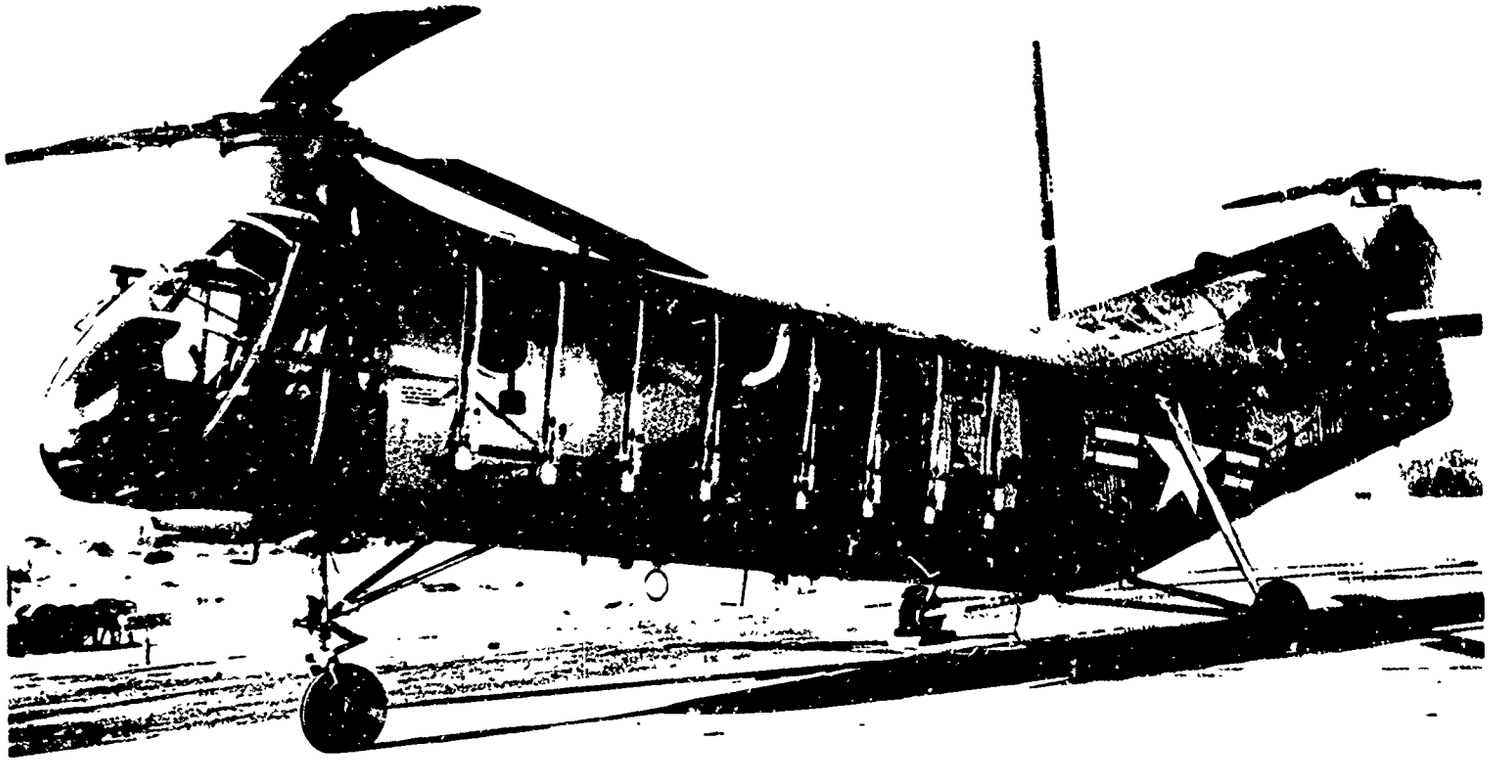

Figure 3. Sampling Equipment - Port Side

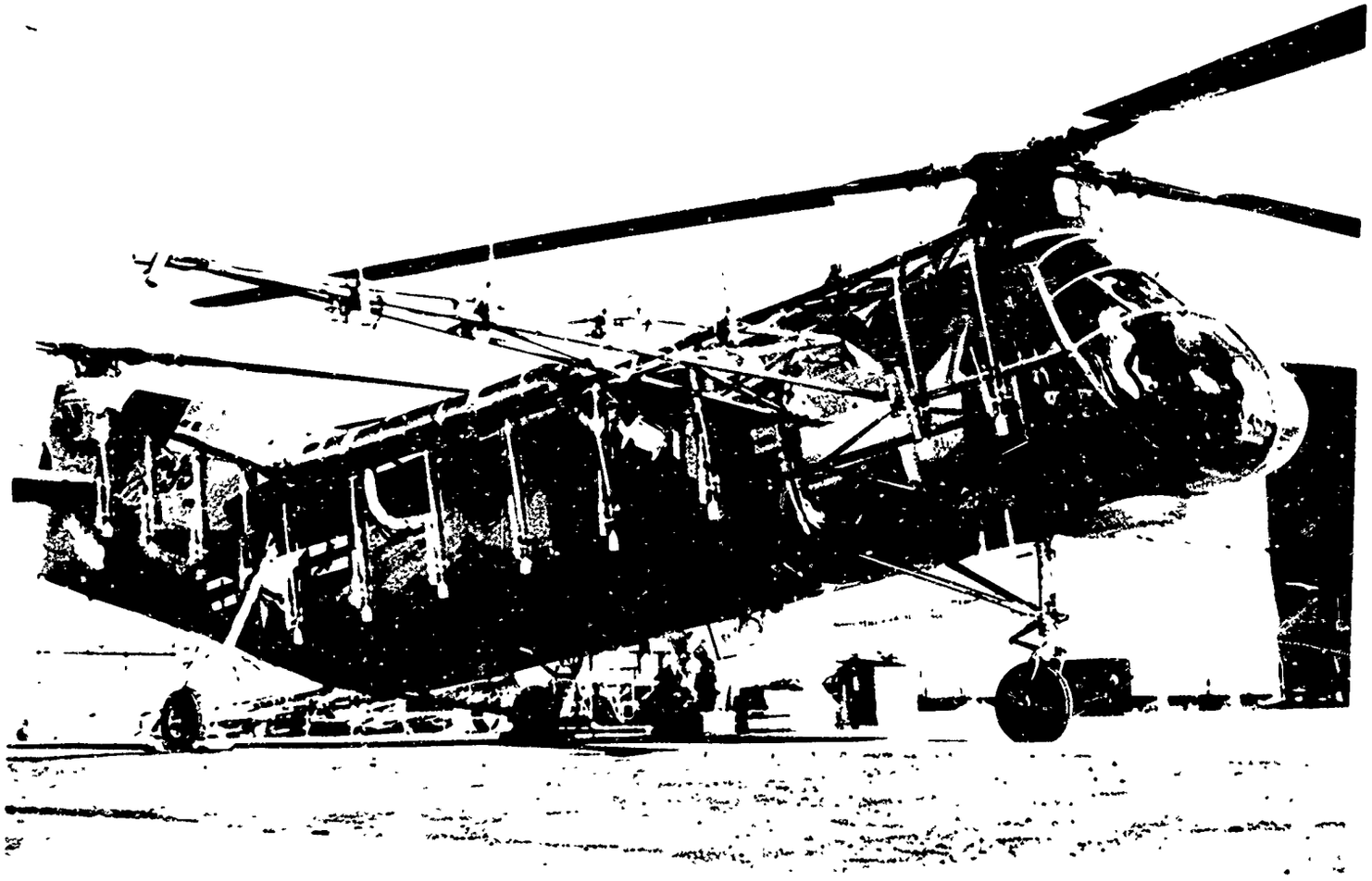

Figure 4. Sampling Equipment - Starboard Side

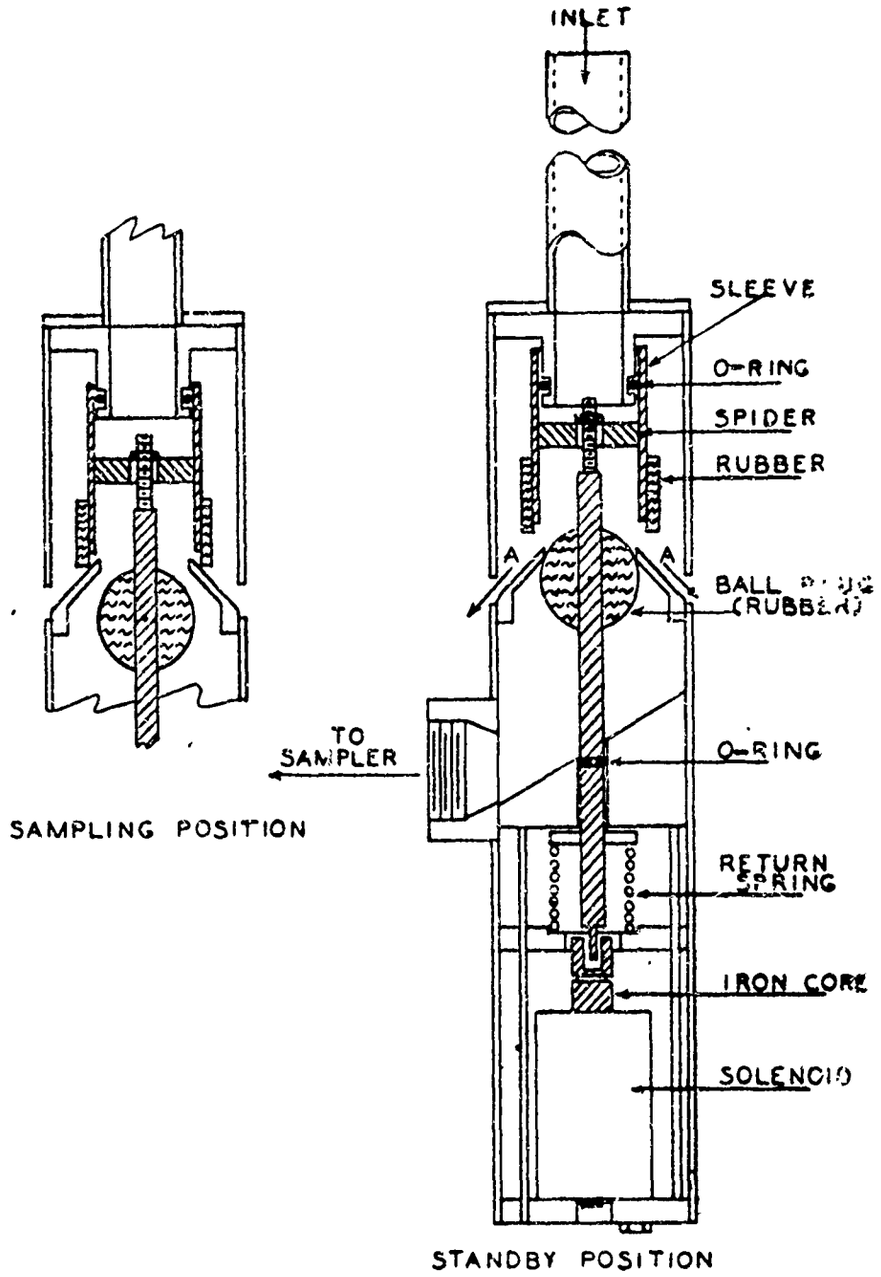

Figure 5. Solenoid-Operated Sampling Valve

The 25 samplers were connected through a common manifold to a blower with a capacity of 400 cfm. The blower was driven with a 3-HP gasoline engine. In each test, the gasoline engine was in operation prior to initiation of sampling; sampling was initiated by activating the valves.

12,000-CFM Sampling System

The inlet for the 12,000-cfm system was made of 12-inch-diameter duct work. The inlet was located at Sample Station 5 (the area of highest dust loading) for 5 tests and at Sample Station 1 (the area of lowest dust loading) for 5 tests. The direction of the inlet was varied in some of the tests. Suction for the 12,000-cfm samples was supplied by a large blower powered with a 20-HP gasoline engine. The dust was collected in 3-foot-diameter x 6-foot-long dust collecting bags which were 100% efficient for 10 μ-diameter particles, 70% efficient for 3 μ-diameter particles and 30% efficient for 1 μ-diameter particles.

Analysis of Dust

The dust samples were analyzed by the U. S. Army Waterways Experiment Station (WES), Vicksburg, Mississippi. Dust collected in the sample bottles in each test was transferred to small plastic vials and shipped to WES for analysis. Analyses were made for total particle weight of the dust at each sampling station and particle size distribution at selected sampling stations.

Each sample was weighed to the nearest milligram. Because of the relatively small sample size, a few grams maximum, the standard hydrometer (sedimentation) analyses for particle size distribution could not be used. Instead, the samples were first sieved to remove all particles larger than 74 μ (U. S. Standard Sieve No. 200); particle gradation measurements were made at the 250 μ and 500 μ levels, also. Material smaller than 74 μ was subjected to a gradation analysis using a Coulter Counter at levels of 14.5 μ, 18 μ, 36 μ, 58 μ and 74 μ. Sample size for the Coulter Counter analysis was standardized at 0.02 g, and the sample was dispersed in a 1% NaCl electrolyte. Samples larger than 0.02 g resulted in complete blockage of the orifice. Particle size analyses were run on samples from Sample Stations 1, 5, 6, 17, 22 and 25.

TEST PROGRAM

The framework, samplers, boom and blower were installed on the helicopter at MSAR. Debugging runs were made to establish that the sampling system was functioning properly. When it was verified that the system was operating as intended, the samplers were removed and stored on board the helicopter. The helicopter was then flown to Yuma Proving Grounds. The samplers were reinstalled at Yuma and the sampling system was checked again. Two test sites were used at Yuma Proving Grounds - Phillips Drop Zone and the Vehicle Dust Course - and the helicopter operated from Laguna Field at the proving ground.

The test sites were plowed to a depth of 6 inches and then disced. The areas which were treated were 100 to 200 feet square. This area served for 6 runs and then was plowed and disced again.

Initial tests involved the establishment of an acceptable sampling time. The requirements selected for sampling time were:

1. Sampling time must be such that a sufficiently large sample could be collected.

2. Sampling time must not be too long, since the particle gradation of the soil could change over the sampling period.

Tests performed over various time periods ranging from 1 to 8 minutes indicated that a 4-minute sampling time would meet both of these requirements. Appendix I lists the samples which were taken during the program.

Approximately 25 samples were taken at each test site at Yuma Proving Grounds. This covered a calendar period of March to May of 1966. During this period, the rotor blades were replaced three times and the engine was replaced once.

Severe erosion of the rotor blades was observed after a few minutes in the dust. In the first few tests, 3 layers of wood on the leading edge were worn away after 20 minutes of hovering in dust. The blades were taped for

all subsequent tests to minimize erosion. In general, the tape lasted through 3-4 tests (12-16 min), and it was standard operating procedure to replace the tape at least once per day.

After the small-scale testing was completed at Yuma Proving Grounds, the sampling equipment was dismantled and forwarded to Ft. Benning, Ga. The helicopter was flown to Davis-Monthan AFB, where metal blades were installed. It was then ferried to Ft. Benning, Ga., where the samplers were reinstalled and testing was initiated.

The leading edges of the rotor blades were covered with a 1/8-inch-thick polyurethane film manufactured and installed by the B. F. Goodrich Company. This provided excellent protection for the leading edges. However, the unprotected tip caps were completely eroded through after 25 tests (Figure 6).

Tests at Ft. Benning were made at Lee Drop Zone. The test area there was also plowed to a depth of 6 inches and disced. The helicopter operated out of Lawson Field at Ft. Benning.

After the tests at Ft. Benning, the helicopter was returned to MSAR and the 12,000-cfm sampling system was installed. The system was tested and then dismantled, crated, and shipped to Yuma Proving Grounds. The equipment was reinstalled at Yuma and the final phase of testing was initiated. All simulated engine inlet samples were taken at a 1-foot hover height; the total weight of the craft was 12,850 pounds. Eight tests were run at Phillips Drop Zone and two were run at the Vehicle Dust Course.

A typical test procedure for small-scale sampling was as follows:

1. Install clean sample collection bottles.
2. Set up visual targets, when required.
3. Secure stable hover at desired elevation.
4. Activate sampling equipment.
5. Sample for 4 minutes.

Figure 6. Rotor Blade Erosion - Ft. Benning, Ga.

6. Take photographs of targets, dust cloud, and so on, when required.

7. Deactivate sampling equipment.

8. Terminate hover.

9. Remove and cap sample bottles.

The dust samples were transferred from the sample bottles to plastic sample vials and shipped to WES for analysis. The large-scale runs were performed in the same fashion; in addition, the dust collection bags were changed after each run. The motion pictures which were taken have been edited into a 20-minute film.

RESULTS AND DISCUSSION

Weight and particle size analysis for the small-scale tests are presented in Appendix II. Appendix III lists the results of the large-scale tests. The following discussion of results is presented in terms of either average or maximum values.

Small-Scale Tests

Figure 2 shows the locations of the small-scale samplers. These included 12 on the starboard side, 8 on the port side, and 5 beneath the forward rotor blade. Results obtained with Sampler No. 20 were of questionable value due to repeated malfunction of the soleniod valve; the results of Sample Station 20 are not included in the summary.

Tables I,II and III list the average and maximum dust concentration for each sampling station. Figures 7, 8 and 9 show schematically dust distribution around the helicopter at each sampling site. Distribution near the fuselage and beneath the forward rotor, starboard side, is based on sampling data. Distribution at distances beyond 1-1/2 feet from the fuselage was extrapolated from the sampling data. For selection of an engine air inlet location, or for prediction of the amount of dust which must be removed by a filter or separator, only the distribution near the fuselage need be considered.

TABLE I. DUST CONCENTRATION, PHILLIPS DROP ZONE, YUMA PROVING GROUNDS (mg/cu ft)

Sampling Station Number*	1 Ft		10 Ft		75 Ft	
	Avg	Max	Avg	Max	Avg	Max
1	2.8	8.5	4.2	6.7	2.6	5.5
2	4.9	12.2	6.8	9.9	3.2	7.1
3	5.6	17.2	6.3	10.7	2.5	5.1
4	12.8	37.8	14.8	17.9	6.3	10.8
5	12.4	27.9	18.5	27.6	5.3	7.8
6	9.3	18.9	14.9	25.0	4.1	8.2
7	9.8	19.4	13.3	16.6	7.3	14.1
8	6.3	16.2	9.8	19.0	4.2	9.6
9	4.5	12.5	6.6	12.9	2.5	5.8
10	7.7	19.8	6.4	10.8	1.7	3.2
11	6.4	16.5	5.6	9.9	2.1	6.4
12	4.1	9.2	2.6	3.3	0.7	2.0
13	5.1	12.5	2.9	5.1	0.3	0.6
14	4.1	14.9	4.0	6.5	0.6	0.9
15	6.4	14.5	6.3	7.5	1.3	2.4
16	5.8	20.9	6.1	9.7	1.5	2.4
17	9.0	29.4	9.2	13.6	1.3	1.9
18	4.1	14.7	4.5	7.2	0.8	1.4
19	11.3	31.0	12.5	23.8	2.3	3.3
20	-	-	-	-	-	-
21	3.8	12.0	2.8	11.3	2.2	5.4
22	13.7	22.4	7.0	11.4	1.6	5.1
23	11.8	25.8	7.2	16.0	2.0	3.9
24	13.1	34.1	12.2	22.2	4.2	7.7
25	8.8	19.0	14.3	27.4	5.1	14.3

*Samplers 1-12 located on starboard side; 13-20 located on port side; 21-25 located beneath the rotor.

TABLE II. DUST CONCENTRATION, VEHICLE DUST COURSE, YUMA PROVING GROUNDS (mg/cu ft)

Sampling Station Number*	1 Ft		10 Ft		75 Ft	
	Avg	Max	Avg	Max	Avg	Max
1	4.5	10.8	4.2	9.4	2.4	4.4
2	8.7	20.2	7.2	15.3	5.1	9.9
3	7.9	14.6	8.9	19.1	5.0	6.0
4	10.6	19.8	11.1	28.8	5.0	8.2
5	15.5	28.6	18.1	33.6	13.6	21.8
6	12.0	18.6	13.5	38.8	9.7	19.5
7	8.9	26.5	9.1	16.3	6.0	10.7
8	8.9	21.7	6.5	11.0	5.4	8.9
9	8.1	26.0	2.6	5.3	1.2	2.2
10	8.9	20.4	6.0	10.8	6.5	12.8
11	6.9	13.7	6.3	10.4	5.4	14.3
12	4.9	8.2	4.4	8.2	3.6	6.1
13	5.5	8.9	5.4	7.7	4.8	7.4
14	4.5	8.3	4.4	6.5	4.1	7.2
15	6.4	11.3	6.5	12.3	7.0	9.4
16	4.3	10.8	2.5	4.9	2.8	6.5
17	7.6	17.4	8.0	15.1	9.2	13.8
18	4.0	11.8	3.0	6.0	1.6	2.8
19	8.1	19.3	9.6	21.3	6.9	13.1
20	-	-	-	-	-	-
21	6.4	12.7	5.1	9.8	5.7	11.1
22	8.3	22.1	10.6	18.5	4.4	10.5
23	9.3	36.7	5.4	10.8	2.0	3.4
24	16.1	40.0	10.9	25.3	8.7	17.6
25	9.9	20.2	8.6	16.8	4.7	5.8

*Samplers 1-12 located on starboard side; 13-20 located on port side; 21-25 located beneath the rotor.

TABLE III. DUST CONCENTRATION, LEE DROP ZONE, FT. BENNING, GA. (mg/cu ft)

Sampling Station Number*	1 Ft		10 Ft		75 Ft	
	Avg	Max	Avg	Max	Avg	Max
1	3.4	6.3	8.1	20.5	1.4	2.6
2	6.0	10.4	10.3	27.3	1.7	2.8
3	8.4	15.3	10.1	23.7	1.8	2.4
4	9.4	19.7	10.8	23.5	2.1	2.4
5	18.4	28.5	17.6	40.6	2.7	3.5
6	14.0	22.9	16.7	33.9	3.0	3.6
7	12.4	23.8	16.5	38.7	4.1	6.9
8	8.8	13.4	9.7	22.9	3.0	3.9
9	4.7	10.6	6.4	24.0	2.0	3.0
10	7.6	12.2	6.8	16.3	2.5	3.5
11	8.1	15.4	10.5	26.7	2.1	3.4
12	4.9	8.4	4.6	8.3	1.0	2.0
13	5.1	10.8	5.8	14.9	0.8	1.3
14	3.3	6.3	3.4	5.9	0.4	0.8
15	6.2	17.2	5.8	11.2	1.3	1.9
16	3.7	6.1	4.3	8.3	1.0	1.6
17	7.2	13.9	7.4	14.2	1.9	3.4
18	4.3	7.4	3.7	7.7	0.6	1.0
19	8.5	12.5	7.6	14.3	1.2	1.8
20	-	-	-	-	-	-
21	7.7	12.6	5.3	10.1	0.7	1.7
22	10.2	24.2	5.7	12.4	0.9	1.5
23	12.3	25.2	6.4	16.9	1.5	2.5
24	18.3	29.6	13.8	29.1	2.7	3.5
25	9.2	32.4	11.3	27.5	1.5	2.0

*Samplers 1-12 located on starboard side; 13-20 located on port side; 21-25 located beneath the rotor.

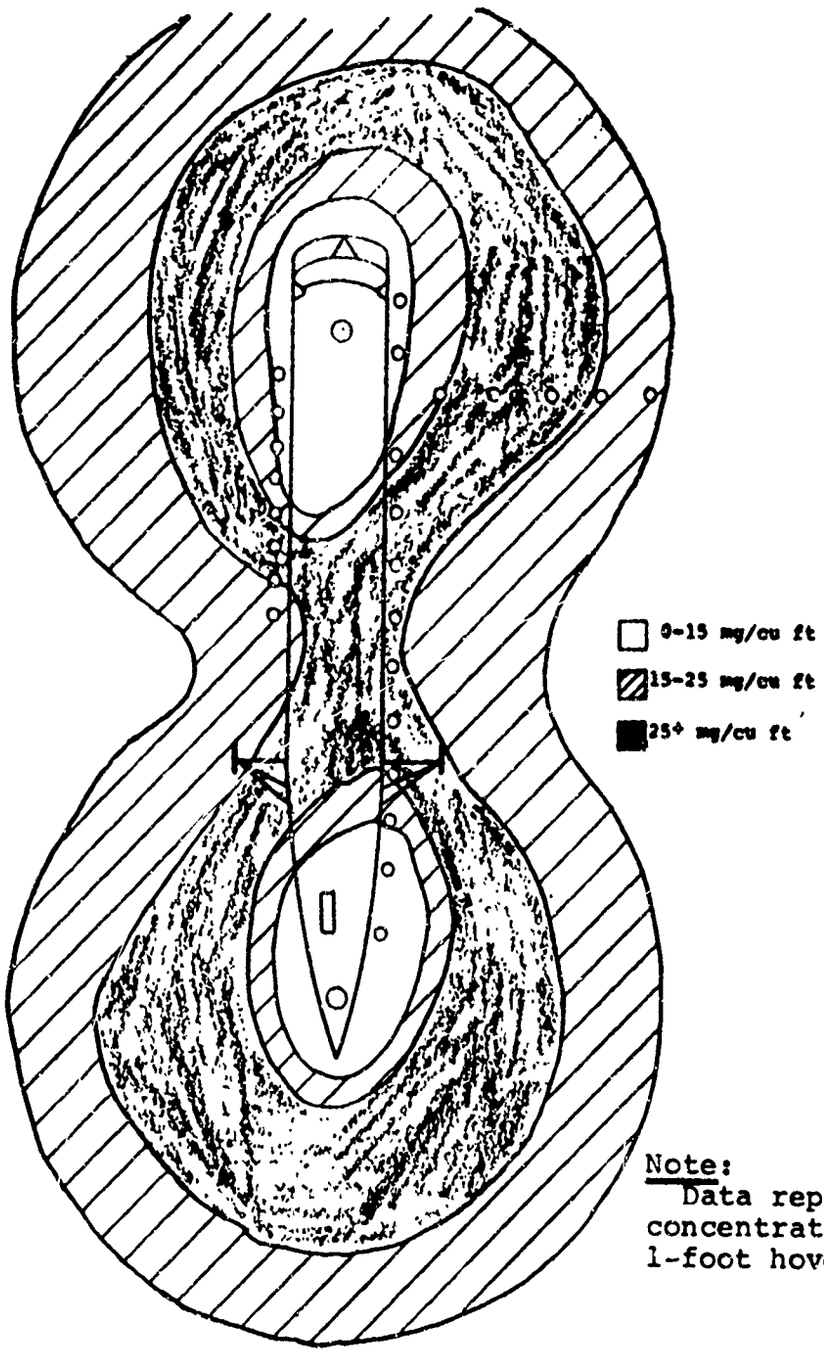

Note:
Data represents average concentration measured at 1-foot hover height.

Figure 7. Dust Distribution - Phillips Drop Zone

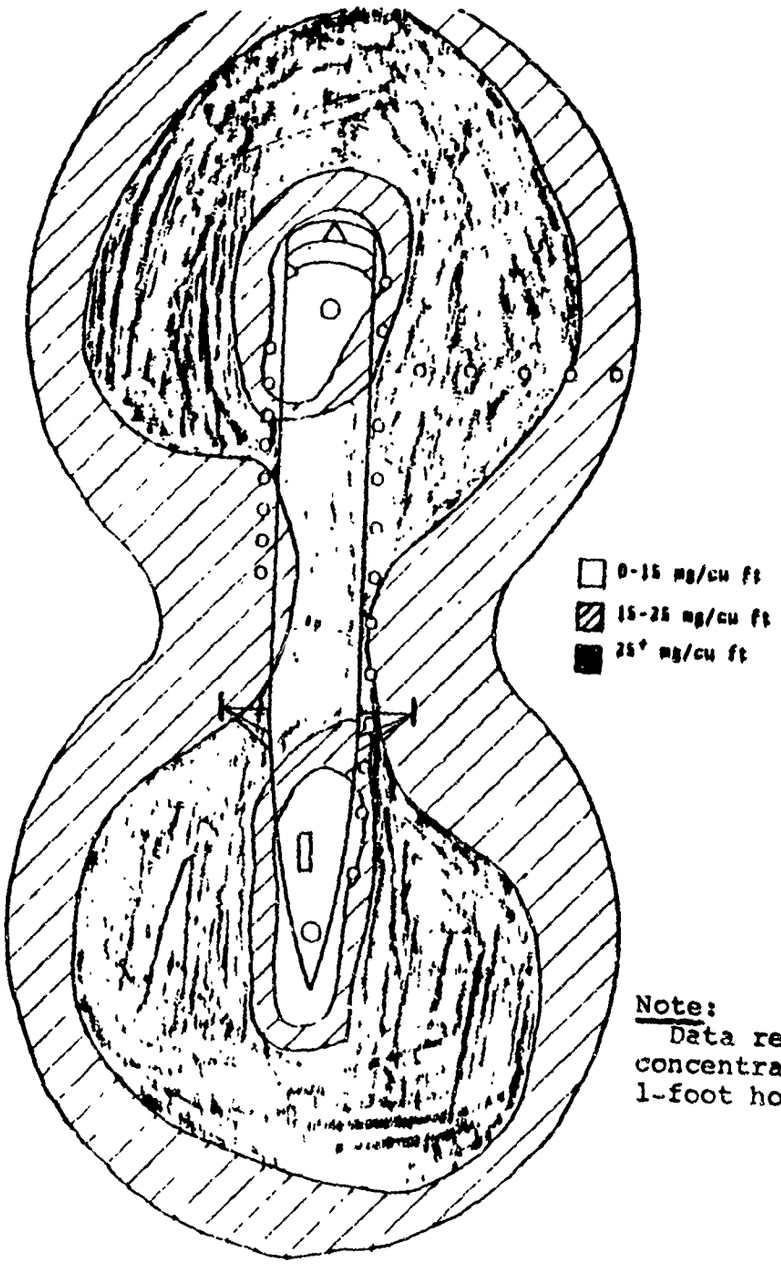

Note:
Data represents average concentration measured at 1-foot hover height.

Figure 8. Dust Distribution - Vehicle Dust Course

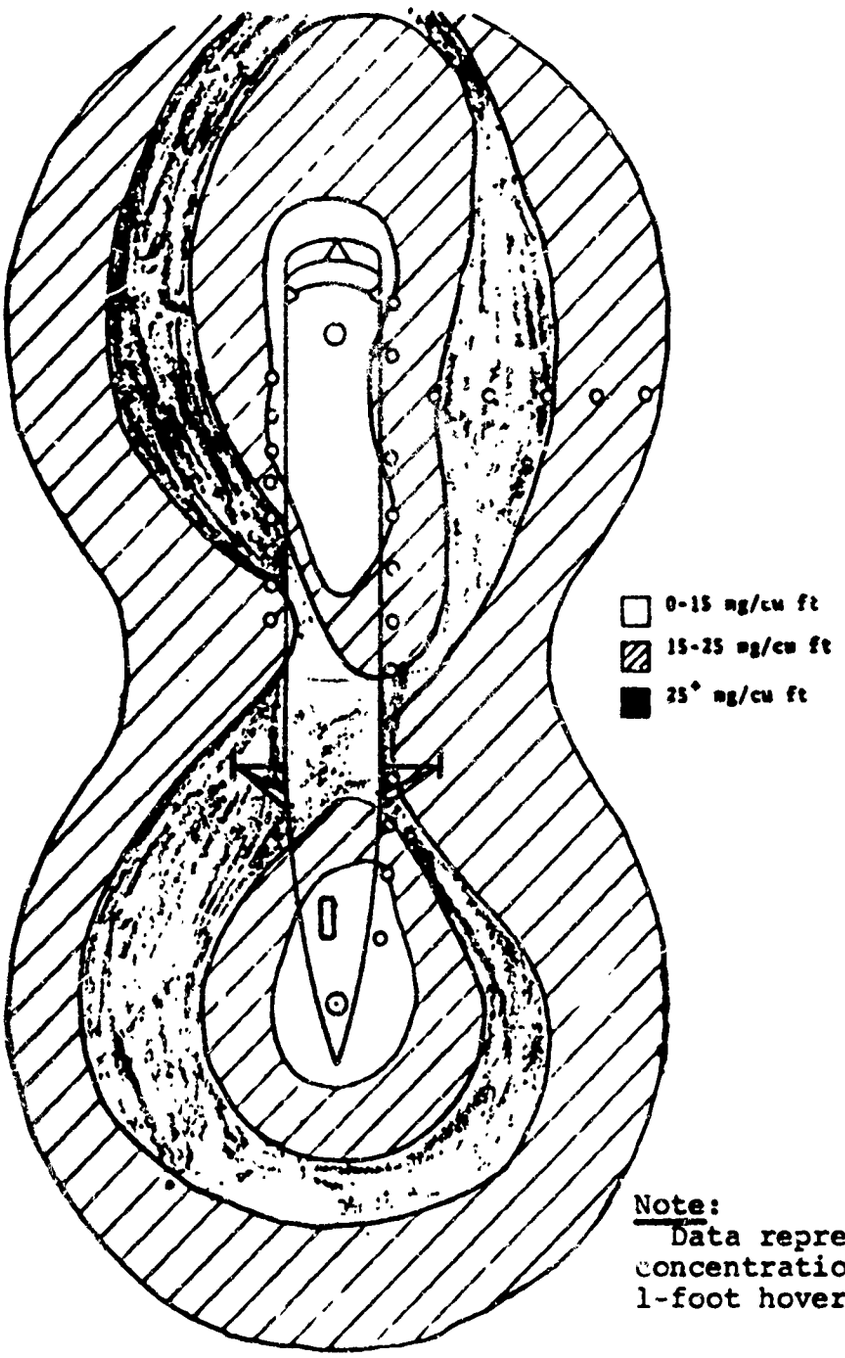

Note:
Data represents average concentration measured at 1-foot hover height.

Figure 9. Dust Distribution - Lee Drop Zone

The area of lowest dust concentration (0-15 mg/cu ft) was beneath the rotor hubs. The highest dust concentration (25+mg/cu ft) was near the area of rotor blade overlap, but concentration was also high at distances corresponding to about 1/3 to 2/3 the rotor radius.

Dust concentrations were measured at hover heights of 1, 10 and 75 feet. Maximum values as a function of location in the fuselage are shown in Table IV. High concentrations were measured at 1 and 10 feet, while concentrations were significantly lower at 75 feet. The highest concentration at 75 feet was found at the Vehicle Dust Course; this was attributed to the smaller particle size of the dust at that site.

Large-Scale Tests

The large-scale (12,000 cfm) sampling inlet was mounted at the area of highest dust loading (Sample Station No. 5) for 5 of the tests, and at the area of lowest dust loading (Sample Station No. 1) for 5 of the tests. At Sample Station No. 5, the inlet was facing upward for 2 of the tests and to the side for 3 of the tests. The upward-facing inlet duplicated the inlet direction for the small-scale samplers, and the horizontal inlet simulated the inlet positioning for a turbine engine. At Sample Station No. 1, the inlet was faced horizontally for 2 tests, and was pointed down for 3 tests. Again, the horizontal configuration simulated normal turbine inlet geometry; the downward-facing tests were run to see if that configuration would reduce the quantity of dust ingested.

Table V lists the results of the 12,000 cfm samplers. The results were slightly higher than those found with the small-scale samplers, but still in the same range. Direction of the inlet nozzle appeared to have some influence on the amount of dust ingested. For example, at Sample Station No. 1, the maximum concentration determined with the nozzle in a horizontal position was 4.5 mg/cu ft, while the average concentration with the nozzle pointing downward was 3.7 mg/cu ft.

Figures 10, 11 and 12 compare the particle distribution at various elevations with the particle size distribution of the terrain. The particle size of the recirculated dust was smaller than the particle size of the terrain. At Phillips Drop Zone, 95% of the terrain particles were larger than 100 μ, whereas the recirculated dust showed 63% >100 μ at a 1-foot height, 57% >100 μ at a 10-foot height, and 27% >100 μ at a 75-foot height.

TABLE IV. MAXIMUM DUST CONTENT AS A FUNCTION OF LOCATION (mg/cu ft)

Location	Phillips DZ			Vehicle Dust Course			Lee DZ		
	1 ft	10 ft	75 ft	1 ft	10 ft	75 ft	1 ft	10 ft	75 ft
Rear rotor hub	8.5	6.7	5.5	10.8	9.4	4.4	6.3	20.5	2.6
Forward rotor hub	9.2	3.3	2.0	8.2	8.2	6.1	8.4	8.3	2.0
Highest concentration*	37.8 (4)	27.6 (5)	14.1 (7)	28.6 (5)	38.8 (6)	21.8 (5)	28.5 (5)	40.6 (5)	6.9 (7)

*Numbers in parentheses indicate sample station number.

TABLE V. MAXIMUM DUST CONTENT MEASURED WITH 12,000 CFM SAMPLER (mg/cu ft)					
Station No. 1			Station No. 5		
Large*	Small		Large*	Small	
	Avg	Max		Avg	Max
4.5 →	2.8	8.5	20.4 ↑	12.4	27.9
3.7 ↓			18.6 →		

*Arrows show direction of air inlet nozzle.

Visibility

The terrain in the immediate vicinity of the helicopter (out to at least 20 feet) was visible in all tests. At 1 and 10 feet hover heights, the horizon was completely obscured, but at 75 feet the horizon was visible. On two occasions, at 10 feet hover height, the pilot lost all ground reference. However, this was not during a stable hover, but occurred after completion of a test and during attempts to pull out of the cloud and leave the area. It became standard operating procedure to set down after tests at 1 and 10 feet and allow the cloud to dissipate before taking off.

An attempt was made to correlate pilot visibility with dust cloud characteristics. A radiometer was mounted on board the helicopter to measure light intensity during the initial runs. This technique was not suitable because the radiometer sensed both reflected and transmitted light.

For some of the runs, numbered targets were positioned in front of the helicopter at distances of 50, 75, 100, 125 and 150 feet, and photographic and visual observations were recorded. The targets were white with black numerals and were of high contrast compared with the background of dust and terrain. The targets were visible to varying degrees. At the Vehicle Dust Course, the target at 50 feet was intermittently visible. At Lee Drop Zone, the target at 50 feet was always visible and the target

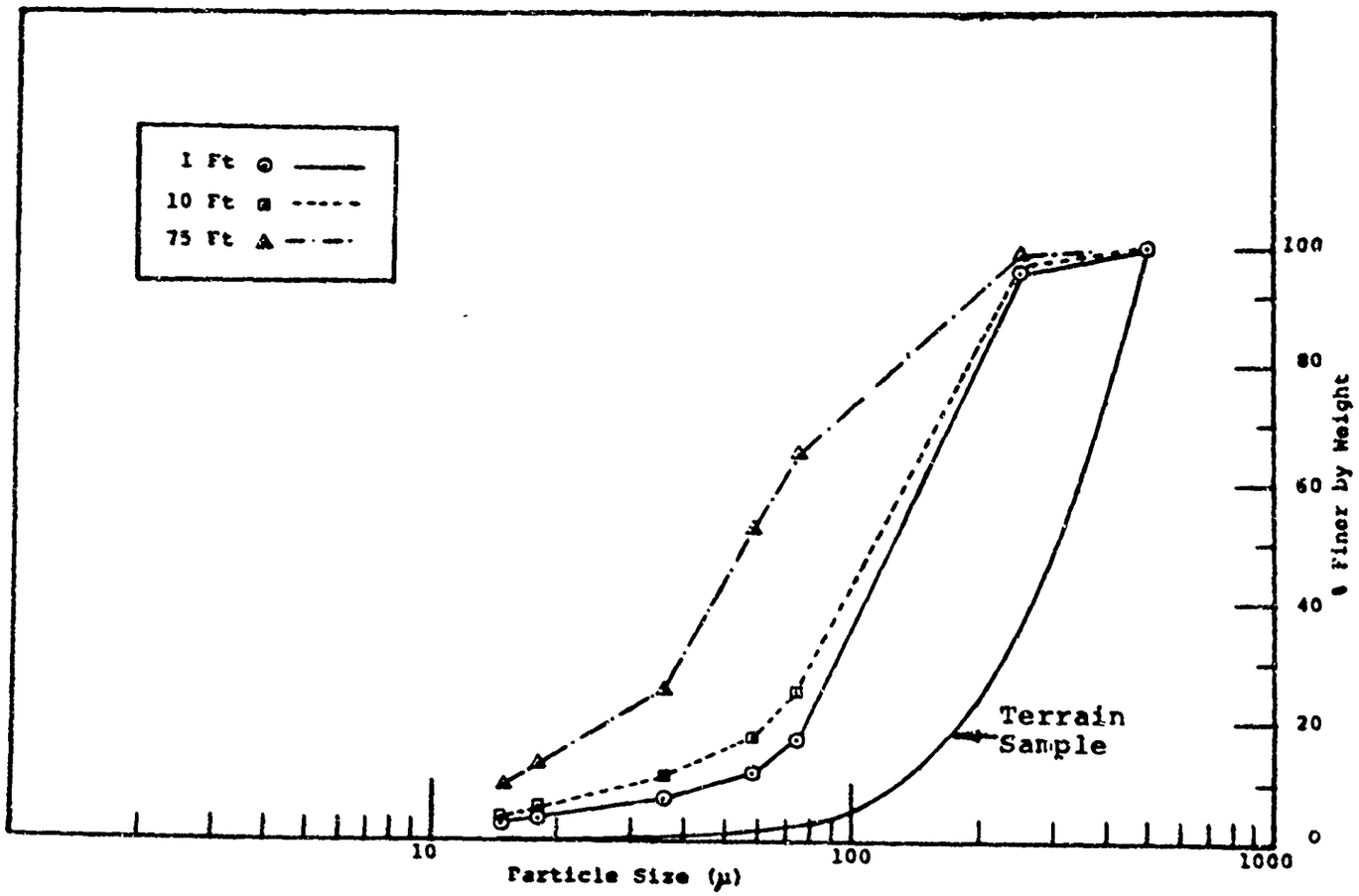

Figure 10. Typical Particle Size Distribution as a Function of Elevation, Sample Station 5, Phillips Drop Zone

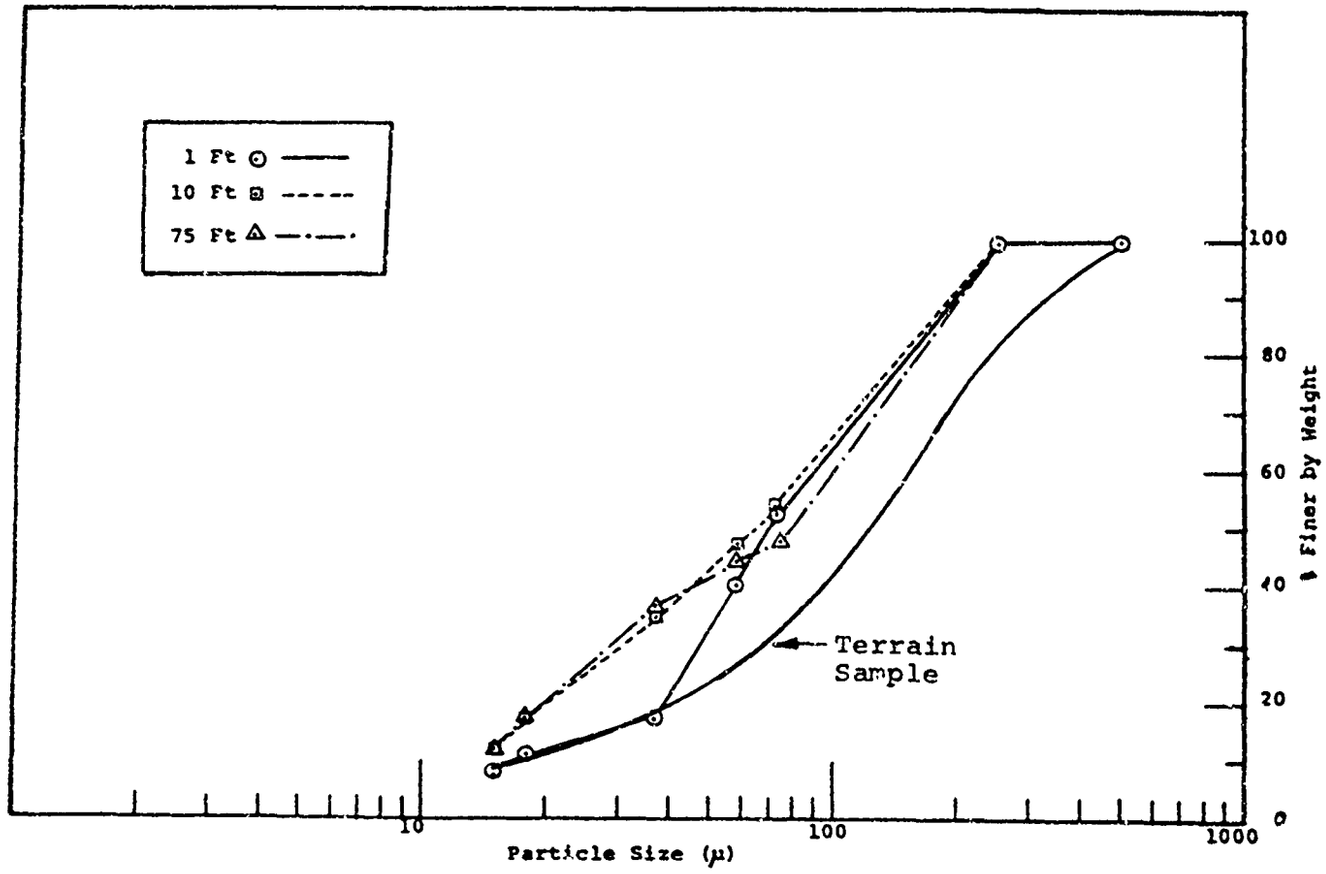

Figure 11. Typical Particle Size Distribution as a Function of Elevation, Sample Station 5, Vehicle Dust Course

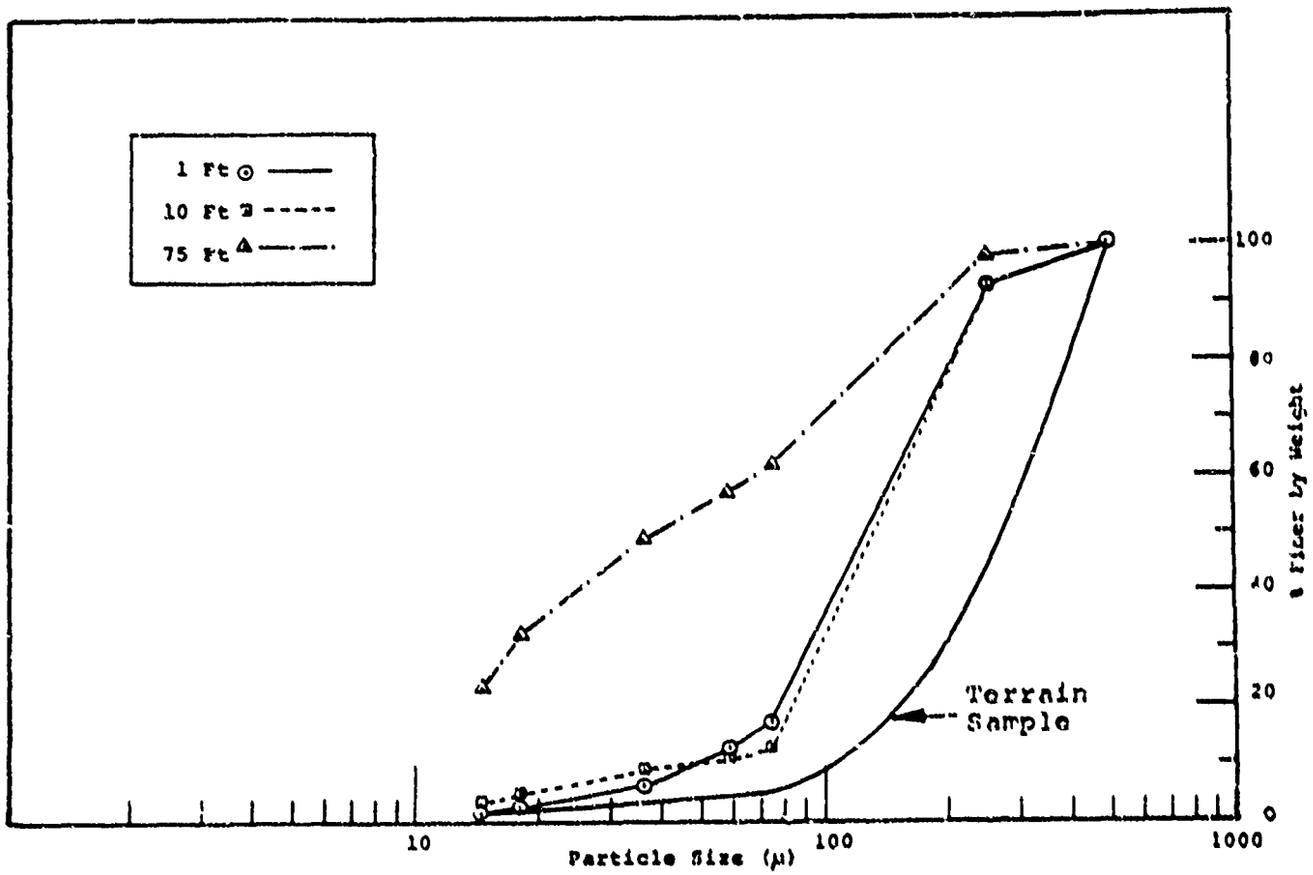

Figure 12. Typical Particle Size Distribution as a Function of Elevation, Sample Station 5, Lee Drop Zone

at 150 feet was occasionally visible (Figure 13). Objects of low contrast could not be seen beyond 10-20 feet.

The dust cloud was viewed from another helicopter flying overhead, and photographs were taken. The observations indicated that the helicopter was surrounded by a dense doughnut-shaped cloud (Figure 14). Although the helicopter was completely visible from above, it was not visible to a viewer standing on the ground outside of the cloud (Figure 14).

Overhead photographs of a UH-1D were made, also. These showed a cloud of similar shape (Figure 15). However, the dense part of the cloud was not as far from the UH-1D as it was from the H-21. Visually, it appeared that the dust concentration near the UH-1D was higher than that near the H-21.

Effect of Another Helicopter Hovering Nearby

Two tests were run in which an H-34 hovered about 100 feet from the H-21. This changed the recirculation pattern and increased the dust concentration around the H-21 by an average factor of about 5. Dust concentrations during takeoff and landing maneuvers increased the average dust concentration by a factor of about 3.

Effect of Takeoff and Landing

A few runs were made in which the helicopter landed, the dust cloud was allowed to clear, and then the helicopter took off. Dust concentrations made during these maneuvers were higher than the stable hover values by a factor of about 3.

CONCLUSIONS AND RECOMMENDATIONS

The following conclusions were made from this study:

1. The area of lowest dust concentration is near the rotor hubs (average = 2-4 mg/cu ft at 1 foot hover height).

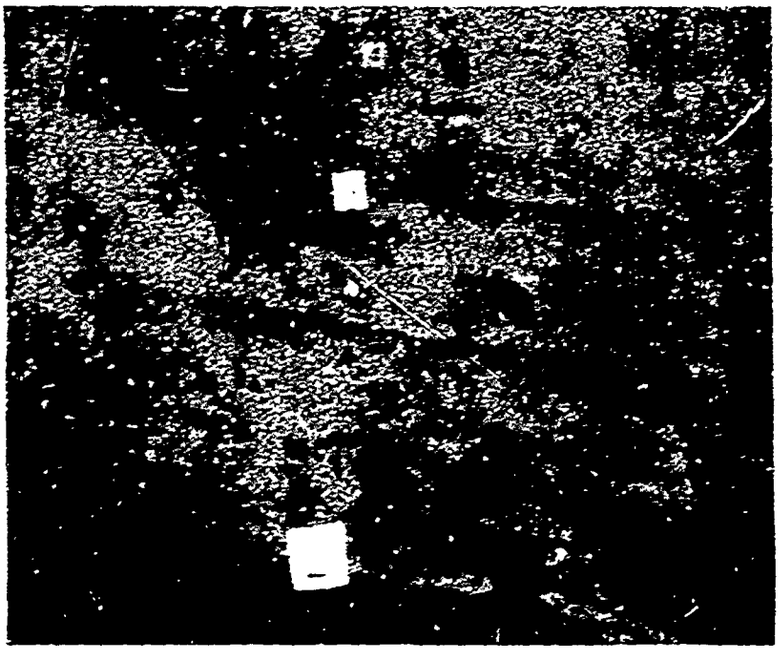

Photograph taken from cockpit

Target 2 - 50 feet
Target 3 - 75 feet
Target 4 - 100 feet

1 foot hover height

Figure 13. View of Targets at Lee Drop Zone

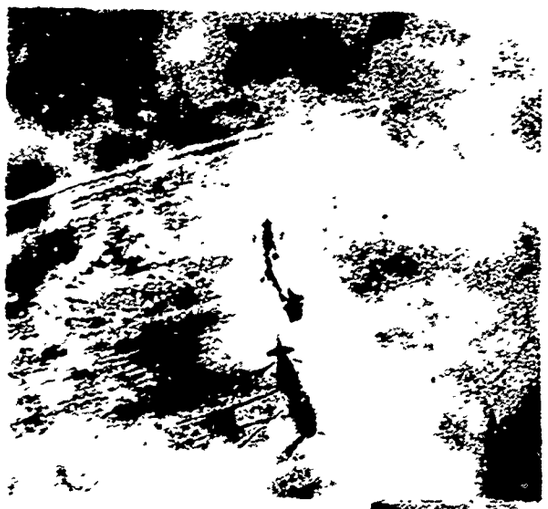

Overhead View of H-21
at Vehicle Dust Course

Overhead View of H-21
at Phillips Drop Zone

View From Outside
of Cloud

Figure 14. Dust Cloud Characteristics

REFERENCES CITED

1. Fradenburgh, E.A., "Flow Field Measurements for a Hovering Rotor Near the Ground", Fifth Annual Western Forum, A.H.S., September 1958.

2. Heyson, H.H., "An Evaluation of Linearized Vortex Theory as Applied to Single and Multiple Rotors Hovering in and Out of Ground Effect", NASA TND-43, September 1959.

3. Bendo, J., and Hooper, R., "CH46A Sand Sampling Tests, Patuxent River NATC", Boeing Report, July 1964.

4. Watjen, E.A., "Amount of Dust Recirculated by a Hovering Helicopter", Kaman Aircraft Corporation Report R-169, December 1956.

5. George, M.M., and Kisielowski, E., "Evaluation of Dust Distribution Around Helicopters, Dynasciences Corp. Report DCR-193, January 1966.

6. Weis, H.K., and B.H. Baisley., "Sampler Installation", Dynasciences Corp. Report DCR-207, April 1966.

TABLE VI. SUMMARY OF FT. BENNING RUNS

Run No.	Date	Gross Weight (lb)	Hover Height (ft)*	Manifold Pressure (in Hg)	RPM	Temp. (°F)	Wind Velocity (mph)	Dust Concentration (mg/cu ft) Sample Station 5	8	17	22	Remarks
B-30	9-1-66	11,200	1	41.5	2500	88	2	3.5	2.8	4.2	1.0	
B-24	8-30-66	11,300	1	42	2500	86	6	10.5	11.3	3.5	7.9	
B-19	8-30-66	11,500	1	44	2500	88	3	26.0	22.9	11.4	11.9	
B-17	7-8-66	11,600	1	44	2500	89	4	15.8	10.5	6.6	12.7	
B-18	8-30-66	11,700	1	45	2600	83	5	15.4	14.4	6.9	7.2	
B-16	7-8-66	11,725	1	43.5	2600	87	3	12.9	8.1	2.8	22.7	
B-1	7-6-66	11,850	1	44	2700	88	5	20.0	10.1	13.9	10.8	
B-4	7-7-66	12,250	1	44.5	2600	83	4	28.5	21.0	5.1	24.2	
B-3	7-7-66	12,400	1	44.5	2600	79	2	4.7	[illegible]	3.8	2.5	
B-2	7-7-66	12,600	1	45	2600	74	2	2.1	[illegible]	1.7	0.6	
B-21	8-30-66	11,200	10	43	2600	86	5	18.0	14.4	10.3	6.3	
B-20	8-30-66	11,300	10	46	2600	82	4	6.9	6.4	2.8	3.4	
B-7	7-7-66	11,600	10	46	2600	88	7	36.8	31.6	7.0	11.8	
B-6	7-7-66	11,900	10	46	2650	85	8	40.6	34.0	6.1	12.4	
B-5	7-7-66	12,050	10	46.5	2600	83	5	16.5	13.5	3.1	3.2	
B-10	7-7-66	12,200	10	48	2600	92	3	2.0	1.5	0.8	0.3	
B-13	7-8-66	12,200	10	49	2650	83	3	5.4	6.1	4.3	7.4	
B-12	7-8-66	12,350	10	51	2700	87	3	2.3	2.6	2.6	5.0	
B-9	7-7-66	12,400	10	48	2700	85	2	2.6	1.6	2.9	5.0	
B-8	7-7-66	12,500	10	50	2650	87	6	12.2	12.3	14.2	4.0	
B-11	7-8-66	12,525	10	51	2700	84	2	4.7	3.3	1.3	1.3	
B-22	8-30-66	12,800	10	51	2650	87	5	18.1	15.6	11.4	7.8	
B-31	9-1-66	11,200	75	45	2500	93	3	1.5	2.5	1.2	1.0	
B-14	7-8-66	12,000	75	50	2700	87	3	2.9	2.5	1.7	0.[illegible]	
B-25	8-30-66	12,250	75	50	2700	87	4	2.9	3.6	3.4	1.5	
B-26	8-30-66	12,400	75	50	2700	86	5	3.5	3.5	1.4	0.6	
B-23	8-30-66	11,400	NA**	NA**	NA**	87	10	2.6	4.1	1.2	4.7	Samples taken during 4 takeoffs and approaches
B-22-a	8-30-66	11,000	NA**	NA**	NA**	86	6	9.2	7.1	4.4	5.9	

* Hover height refers to wheel clearance
** NA = not applicable

Figure 15. Overhead View of UH-1D at Phillips Drop Zone

2. The highest dust concentration is near the area of rotor blade overlap (average - 12-18 mg/cu ft at 1 foot hover height).

3. Takeoff and landing maneuvers increase the dust concentration by a factor of about 3.

4. Another helicopter operating nearby increases the concentration by a factor of about 5.

5. Particles greater than 500 μ are not recirculated.

The following recommendations are made:

1. Photographic coverage of a UH-1 and a CH-47 should be made and compared with existing H-21 photographs.

2. A limited number of samples should be taken using a UH-1 to establish single-rotor dust cloud characteristics.

3. A sampler mounted near the inlet of an operational helicopter would provide a firm basis for a specification for inlet air cleaners.

REFERENCES CITED

1. Fradenburgh, E.A., "Flow Field Measurements for a Hovering Rotor Near the Ground", Fifth Annual Western Forum, A.H.S., September 1958.

2. Heyson, H.H., "An Evaluation of Linearized Vortex Theory as Applied to Single and Multiple Rotors Hovering in and Out of Ground Effect", NASA TND-43, September 1959.

3. Bendo, J., and Hooper, R., "CH46A Sand Sampling Tests, Patuxent River NATC", Boeing Report, July 1964.

4. Watjen, E.A., "Amount of Dust Recirculated by a Hovering Helicopter", Kaman Aircraft Corporation Report R-169, December 1956.

5. George, M.M., and Kisielowski, E., "Evaluation of Dust Distribution Around Helicopters, Dynasciences Corp. Report DCR-193, January 1966.

6. Weis, H.K., and B.H. Baisley., "Sampler Installation", Dynasciences Corp. Report DCR-207, April 1966.

TABLE VI. SUMMARY OF FT. BENNING RUNS

Run No.	Date	Gross Weight (lb)	Hover Height (ft)*	Manifold Pressure (in Hg)	RPM	Temp. (°F)	Wind Velocity (mph)	Dust Concentration (mg/cu ft) Sample Station 5	6	17	22	Remarks
B-10	9-1-66	11,200	1	41.5	2500	88	2	3.5	2.8	4.2	1.0	
B-24	8-30-66	11,300	1	42	2500	86	6	10.5	11.3	3.5	7.9	
B-19	8-30-66	11,500	1	44	2500	88	3	26.0	22.9	11.4	11.9	
B-17	7-8-66	11,600	1	40	2500	89	4	15.8	10.5	6.6	12.7	
B-18	8-30-66	11,700	1	45	2600	83	5	15.4	14.4	6.9	7.2	
B-16	7-8-66	11,725	1	43.5	2600	87	3	12.9	8.1	2.8	22.7	
B-1	7-6-66	11,850	1	44	2700	88	5	20.0	10.1	13.9	10.8	
B-4	7-7-66	12,250	1	44.5	2600	83	4	28.5	21.0	5.1	24.2	
B-3	7-7-66	12,400	1	44.5	2600	79	2	4.7	3.3	3.8	2.5	
B-2	7-7-66	12,600	1	45	2600	74	2	2.1	1.6	1.7	0.6	
B-21	8-30-66	11,200	10	43	2600	86	5	18.0	14.4	10.3	6.3	
B-20	8-30-66	11,500	10	46	2600	82	4	6.9	6.4	2.8	3.4	
B-7	7-7-66	11,800	10	46	2600	88	7	36.8	31.5	7.0	11.0	
B-6	7-7-66	11,900	10	46	2650	85	8	40.6	34.0	6.1	12.4	
B-5	7-7-66	12,050	10	46.5	2600	83	5	16.5	13.5	3.1	3.2	
B-10	7-7-66	12,200	10	48	2690	92	3	2.0	1.5	0.8	0.3	
B-13	7-8-66	12,200	10	49	2650	83	3	5.4	6.1	4.3	7.4	
B-12	7-8-66	12,350	10	51	2700	87	5	2.3	2.6	2.6	5.0	
B-9	7-7-66	12,400	10	48	2700	85	2	2.6	.6	2.9	5.0	
B-8	7-7-66	12,500	10	50	2650	87	6	12.2	12.3	14.2	4.0	
B-11	7-8-66	12,525	10	51	2700	84	2	4.7	3.3	1.3	1.5	
B-22	8-30-66	12,800	10	51	2650	87	5	18.1	15.6	11.4	7.8	
B-31	9-1-66	11,200	75	45	2500	93	3	1.5	2.5	1.2	1.0	
B-14	7-8-66	12,000	75	50	2700	87	3	2.9	2.5	1.7	0.3	
B-25	8-30-66	12,250	75	50	2700	87	4	2.9	3.6	3.4	1.5	
B-26	8-30-66	12,400	75	50	2700	86	5	3.5	3.5	1.4	0.6	
B-23	8-30-66	11,400	NA**	NA**	NA**	87	10	2.6	4.1	1.2	4.7	Samples taken during 4 takeoffs and approaches
B-22-a	8-30-66	11,000	NA**	NA**	NA**	86	6	9.2	7.1	4.4	5.9	

* Hover height refers to wheel clearance
** NA = not applicable

TABLE VII. SUMMARY OF VEHICLE DUST COURSE RUNS

Run No.	Date	Gross Wt.(#)	Hover * Height (ft)	Manifold Pressure (in Hg)	RPM	Temp. (°F)	Wind Vel. (mph)	Dust Conc. (mg/cu ft) Sample Station 5	6	17	22	Remarks
2-Y-4	4-21-66	11,550	1	42	2550	76	3	19.7	18.6	7.3	9.8	
2-Y-16	5-6-66	11,800	1	49	2700	95	12	44.8	41.5	18.6	32.4	Moving around site
2-Y-20	5-6-66	11,900	1	47.5	2700	82	2	28.6	12.8	7.5	2.8	Vehicle dust road
2-Y-1	4-21-66	11,950	1	42	2500	57	3	9.8	5.3	4.2	3.2	
2-Y-14	5-6-66	12,000	1	49	2700	72	5	10.8	14.4	10.3	15.5	
2-Y-19	5-7-66	12,050	1	45.5	2500	82	2	7.6	1.5	1.4	5.3	
2-Y-13	5-6-66	12,125	1	49	2700	72	3	16.4	14.9	8.9		
2-Y-23	5-17-66	12,525	1	44	2500	69	3	3.9	3.9	2.4	[illegible]	
2-Y-3	4-5-66	12,540	1	43	2500	89	1	5.3	9.4	12.8	2.2	
2-Y-6	4-22-66	12,550	1	45	2500	55	2	12.8	9.8	5.3	5.4	
2-Y-10	4-22-66	12,100	NA	NA	NA	66	2	11.1	7.5	4.7	13.6	Typical mission
2-Y-15	5-6-66	11,825	NA	NA	NA	77	5	23.4	15.3	5.6	19.2	" "
2-Y-5	4-21-66	11,500	10	43.5	2500	80	8	32.6	38.8	15.1	8.5	
2-Y-22	5-7-66	11,560	10	50	2700	84	2	10.5	5.1	1.7	3.1	
2-Y-21	5-7-66	11,710	10	50	2700	84	2	35.6	26.8	11.5	17.9	
2-Y-2	4-21-66	11,825	10	44	[illegible]	64	4	24.5	3.5	11.4	18.5	
2-Y-12	5-6-66	12,250	3-5	[illegible]	[illegible]	[illegible]	3	5.6	7.0	5.3	8.3	
2-Y-8	4-22-66	12,350	10	[illegible]	700	60	5	5.5	1.1	2.3	3.0	
2-Y-11	5-6-66	12,375	3-5	51	[illegible]	68	3	8.5	8.8	6.9	11.4	
2-Y-7	4-22-66	12,450	10	45	2700	60	5	7.8	4.6	4.5	7.0	
2-Y-18	5-17-66	11,325	75	49	2700	73	3	3.5	0.8	0.8	0.6	
2-Y-17	5-6-66	11,675	25	44	2700	96	12	22.8	8.0	5.5	6.2	
2-Y-26	5-17-66	12,125	15-30	49	2700	74	5	11.1	8.8	11.9	7.1	
2-Y-9	4-22-66	12,250	30-35	51.5	2700	62	3	4.7	2.4	1.2	2.3	
2-Y-25	5-17-66	12,325	60-75	51	2700	74	3	8.7	5.5	5.6	4.5	
2-Y-24	5-17-66	12,375	>30	51	2700	74	3	21.8	19.5	13.3	10.5	

*Hover height refers to wheel clearance

NA - Not applicable

TABLE VIII. SUMMARY OF PHILLIPS DROP ZONE RUNS

Run No.	Date	Gross Wt.(#)	Hover * Height (ft)	Manifold Pressure (in Hg)	RPM	Temp. (°F)	Wind Vel. (mph)	Dust Conc. (mg/cu ft) Sample Station 5	6	17	22	Remarks
1-Y-5	4-5-66	11,460	1	40	2500	88	13	12.8	11.3	2.3	17.2	
1-Y-15	4-4-66	11,575	1	40	2500	77	7	2.3	2.1	1.2	1.6	
1-Y-115	5-18-66	11,650	1	42	2500	78	5	8.6	5.5	3.5	0.5	
1-Y-113	5-18-66	11,725	1	42	2400	76	2	2.9	1.8	1.6	0.9	
1-Y-13	4-3-66	11,800	1	41	2500	79	5	2.3	1.2	1.4	0.6	
1-Y-7	3-31-66	12,800	1	42	2500	69	6	9.0	6.1	2.8	3.1	
1-Y-7a	4-2-66	12,800	1	41	2500	63	3	14.0	8.2	2.5	22.4	
1-Y-7b	4-1-66	12,800	1	40	2500	64	3	27.9	18.6	6.7	21.6	
1-Y-12	4-3-66	12,800	1	42	2500	71	3	12.1	19.0	15.5	0.6	
1-Y-19	4-5-66	11,570	1	43	2500	69	--	35.6	46.3	34.8	35.2	H-34 hovering in vicinity
1-Y-20	4-5-66	11,330	1	43	2500	83	--	64.0	62.5	14.9	20.2	" " " "
1-Y-2	4-4-66	11,290	10	43	2600	102	4	13.6	17.1	8.1	6.8	
1-Y-117	5-18-66	11,500	10	45	2500	80	3	2.3	1.5	1.7	0.9	
1-Y-7	4-3-66	11,540	10	44	2500	84	3	1.6	0.8	0.9	0.8	
1-Y-14	4-3-66	11,675	10	43	2500	79	5	14.5	10.1	6.4	11.4	
1-Y-109a	5-6-66	12,125	10	52	2700	98	8	27.6	25.0	8.9	8.8	
1-Y-9a	4-3-66	12,200	10	44	2500	71	3	3.5	4.3	3.3	6.8	
1-Y-9	4-3-66	12,200	10	43	2500	66	3	18.3	7.3	15.6	1.1	
1-Y-16	4-3-66	11,410	75	51	2700	84	3	3.8	1.7	1.1	0.6	
1-Y-3	4-4-66	11,440	75	40	2500	90	7	5.0	3.4	1.9	5.1	
1-Y-6	4-4-66	11,530	75	48	2700	95	1	0.9	0.9	1.3	0.3	
1-Y-18	4-4-66	11,650	75	47	2700	69	3	4.4	3.2	0.4	0.9	
1-Y-11	4-1-66	12,800	75	46	2700	64	3	7.8	6.2	1.9	1.7	
1-Y-12a	4-3-66	12,800	75	47	2700	71	3	1.6	0.9	1.8	0.9	

*Hover height refers to wheel clearance

APPENDIX II
SUMMARY OF RESULTS - SMALL-SCALE TESTS

Gradation Test Results

Run No. 1-Y-2

Sample No.	Dust Content (mg/cu ft)	Percent Finer by Weight						
		500 μ	250 μ	74 μ	58 μ	36 μ	18 μ	14.5 μ
1	5.8	100.0	99.2	58.3				
2	8.5	100.0	98.7	62.3				
3	6.6	100.0	98.4	59.0				
4	----							
5	13.4	100.0	98.0	45.0	29.3	9.6	5.2	4.1
6	17.1	100.0	98.8	55.0	40.4	18.2	8.0	5.6
7	8.4	100.0	98.9	59.2				
8	----							
9	----	**						
10	10.8	100.0	99.7	52.5	32.6	10.0	6.5	4.7
11	9.9	100.0	98.8	49.9				
12	3.2	100.0	97.4	36.1				
13	1.4	100.0	95.2	41.8				
14	6.5	100.0	98.9	63.6				
15	7.3	100.0	98.0	55.8				
16	----							
17	8.1	100.0	98.5	62.1	46.2	15.9	7.4	6.5
18	3.8	100.0	98.8	57.6				
19	9.5	100.0	98.5	59.1				
20	4.5	100.0	99.0	54.8				
21	1.7	100.0	99.1	49.5				
22	6.8	100.0	99.4	74.3	59.5	28.0	12.4	9.9
23	----							
24	22.2	100.	98.2	49.7				
25	27.4	100.0	99.1	53.0	37.8	17.9	9.0	6.9

* No Sample Submitted
** Sample Too Small For Gradation

Gradation Test Results

Run No. 1-Y-3

Sample No.	Dust Content (mg/cu ft)	Percent Finer by Weight						
		500 μ	250 μ	74 μ	38 μ	36 μ	18 μ	14.5 μ
1	3.5	100.0	97.8	54.8				
2	3.4	100.0	97.7	59.6				
3	2.4	100.0	96.0	55.7				
4	5.2	100.0	99.1	48.8				
5	5.0	100.0	97.3	45.0	28.4	13.1	7.8	5.9
6	3.4	100.0	96.6	50.1	35.8	18.0	11.0	6.3
7	5.6	100.0	99.4	53.2				
8	4.9	100.0	99.0	54.2				
9	3.3	100.0	99.0	53.0				
10	2.6	100.0	97.8	43.6	22.5	7.4	5.0	4.1
11	1.5	100.0	94.8	47.7				
12	0.3	**						
13	0.6	**						
14	0.6	**						
15	1.9	100.0	93.8	30.3				
16	1.3	100.0	96.7	69.0				
17	1.9	100.0	95.2	50.9	32.2	12.8	6.3	5.3
18	1.4	100.0	96.6	61.3				
19	3.3	100.0	97.5	56.4				
20	1.5	100.0	97.9	63.4				
21	5.4	100.0	99.53	54.2				
22	5.1	100.0	99.3	68.7	49.5	12.0	5.8	4.3
23	2.5	100.0	98.0	53.0				
24	3.4	100.0	97.2	47.0				
25	2.4	100.0	98.1	52.1	29.5	6.3	5.1	

* No Sample Submitted
** Sample Too Small For Gradation

Gradation Test Results

Test No. 1-Y-5

Sample No.	Dust Content (mg/cu ft)	Percent Finer by Weight						
		500 μ	250 μ	74 μ	58 μ	36 μ	18 μ	14.5 μ
1	1.2	96.8	76.3	11.7				
2	3.4	98.8	81.0	18.3				
3	3.5	100.0	79.2	7.2				
4	16.8	98.3	90.7	18.1				
5	12.8	100.0	91.0	13.4	8.6	7.0	1.5	0.8
6	11.3	100.0	98.1	18.0	10.0	6.3	2.5	2.1
7	5.1	100.0	91.3	25.2				
8	3.9	100.0	88.8	23.2				
9	----							
10	5.6	99.5	79.6	16.2	11.7	9.7	1.7	1.5
11	7.2	99.3	70.8	7.1				
12	7.5	99.4	73.0	8.8				
13	3.1	98.8	71.0	15.0				
14	1.5	97.9	69.3	11.2				
15	1.6	100.0	82.9	17.9				
16	2.3	100.0	86.8	21.4				
17	2.3	97.6	87.9	25.5	19.8	16.6	6.6	5.4
18	0.9	**						
19	3.4	99.1	88.0	23.0				
20	3.4	100.0	90.7	30.0				
21	8.7	99.6	86.4	24.3				
22	17.2	99.8	96.7	38.9	23.9	12.4	6.8	5.2
23	12.8	99.7	89.3	18.8				
24	16.4	99.7	78.8	8.0				
25	16.5	99.6	76.6	11.6	7.2	5.4	2.6	1.7

* No Sample Submitted
** Sample Too Small For Gradation

Gradation Test Results

Run No. 1-Y-6

Sample No.	Dust Content (mg/cu ft)	Percent Finer by Weight						
		500 μ	250 μ	74 μ	58 μ	36 μ	18 μ	14.5 μ
1	0.3	**						
2	0.6	**						
3	0.3	**						
4	0.9	**						
5	0.9	**						
6	0.9	**						
7	0.3	**						
8	0.5	**						
9	----							
10	0.6	**						
11	0.3	**						
12	0.3	**						
13	0.3	**						
14	----							
15	0.8	**						
16	0.5	**						
17	1.3							
18	0.5	**						
19	1.5							
20	0.3	**						
21	0.3	**						
22	0.3	**						
23	0.6	**						
24	0.9	**						
25	0.9	**						

* No Sample Submitted
** Sample Too Small For Gradation

Gradation Test Results

Run No. 1-Y-7

Sample No.	Dust Content (mg/cu ft)	Percent Finer by Weight						
		500 μ	250 μ	74 μ	58 μ	36 μ	18 μ	14.5 μ
1	0.6	**						
2	1.4							
3	3.0							
4	9.3							
5	9.0	100.0	99.1	43.7	32.7	19.7	8.6	7.3
6	6.1	100.0	100.0	53.8	38.5	22.0	11.2	8.5
7	5.9							
8	3.3							
9	3.3							
10	2.6	100.0	100.0	48.5	35.3	14.9	7.9	7.0
11	2.9							
12	1.5							
13	2.0							
14	0.6	**						
15	1.6							
16	1.1							
17	2.8	100.0	100.0	60.7	52.3	38.1	20.9	12.9
18	1.9							
19	6.5							
20	3.0							
21	1.4							
22	3.1	100.0	100.0	67.4	34.1	27.5	18.8	12.9
23	5.0							
24	6.3							
25	10.4	100.0	97.7	49.0	31.8	23.9	10.1	7.5

* No Sample Submitted
** Sample Too Small For Gradation

Gradation Test Results

Run No. 1-Y-7a

Sample No.	Dust Content (mg/cu ft)	Percent Finer by Weight						
		500 μ	250 μ	74 μ	58 μ	36 μ	18 μ	14.5 μ
1	1.2							
2	2.6							
3	3.9							
4	14.5							
5	14.0	100.0	97.1	44.8	28.0	15.5	12.9	10.4
6	8.2	100.0	97.1	59.6	43.2	26.12	16.6	13.6
7	7.2							
8	4.9							
9	3.6							
10	4.1	100.0	97.1	52.9	33.8	16.1	12.6	10.8
11	1.2	**						
12	1.2							
13	1.7							
14	0.3	**						
15	1.6							
16	1.3							
17	2.5	100.0	96.5	59.6	41.4	18.6	11.6	10.3
18	1.7							
19	7.4							
20	3.0							
21	2.8							
22	22.4	100.0	99.8	69.2	51.8	27.9	16.6	12.2
23	10.3							
24	11.9							
25	13.7	100.0	96.3	48.8	36.3	15.6	9.9	7.3

* No Sample Submitted
** Sample Too Small For Gradation

Gradation Test Results

Run No. 1-Y-7b

Sample No.	Dust Content (mg/cu ft)	Percent Finer by Weight						
		500 μ	250 μ	74 μ	58 μ	36 μ	18 μ	14.5 μ
1	2.3							
2	4.0							
3	6.5							
4	37.8							
5	27.9	99.8	95.9	16.9	11.8	7.7	4.0	2.6
6	18.6	100.0	96.9	25.5	16.9	11.0	5.9	4.4
7	18.1							
8	7.7							
9	----							
10	4.9	100.0	92.9	17.9	8.0	5.5	3.6	2.1
11	----							
12	4.4							
13	6.5							
14	3.4							
15	3.5							
16	4.3							
17	6.7	100.0	90.8	35.2	23.1	9.8	5.9	4.4
18	4.7							
19	19.9							
20	5.4							
21	9.1							
22	21.6	100.0	98.6	39.2	29.4	18.0	8.3	5.2
23	20.0							
24	22.2							
25	19.0	100.0	92.0	21.2	14.5	8.6	5.2	3.9

* No Sample Submitted
** Sample Too Small For Gradation

Gradation Test Results

Run No. 1-Y-9

Sample No.	Dust Content (mg/cu ft)	Percent Finer by Weight						
		500 μ	250 μ	74 μ	58 μ	36 μ	18 μ	14.5 μ
1	1.7							
2	4.0							
3	4.2							
4	13.4							
5	18.3	100.0	98.6	24.9	18.8	10.7	5.8	4.3
6	7.3	100.0	98.8	51.5	43.5	24.0	12.0	7.6
7	12.8							
8	4.7							
9	3.9							
10	2.3	100.0	100.0	52.1	36.1	16.4	11.0	8.0
11	0.9	**						
12	1.2	**						
13	5.1							
14	4.8							
15	6.7							
16	9.7							
17	13.6	100.0	98.2	49.8	40.1	22.9	11.8	7.2
18	7.2							
19	23.8							
20	6.9							
21	0.3	**						
22	1.1	100.0	100.0	45.7	31.0	15.3	9.9	8.2
23	0.8	**						
24	4.3							
25	5.9	100.0	95.0	37.5	24.3	6.9	4.7	3.2

* No Sample Submitted
** Sample Too Small For Gradation

Gradation Test Results

Run No. 1-Y-9a

Sample No.	Dust Content (mg/cu ft)	Percent Finer by Weight						
		500 µ	250 µ	74 µ	58 µ	36 µ	18 µ	14.5 µ
1	0.6	**						
2	0.9	**						
3	0.9	**						
4	4.7							
5	3.5							
6	4.3							
7	5.6							
8	2.2							
9	1.7							
10	1.2							
11	1.7	--						
12	0.9	**						
13	0.9	**						
14	0.9	**						
15	1.9							
16	2.4							
17	3.3							
18	0.8	**						
19	3.9							
20	0.9	**						
21	0.6	**						
22	6.8							
23	3.3							
24	4.5							
25	----							

* No Sample Submitted
** Sample Too Small For Gradation

Gradation Test Results

Run No. 1-Y-11

Sample No.	Dust Content (mg/cu ft)	Percent Finer by Weight						
		500 μ	250 μ	74 μ	58 μ	36 μ	18 μ	14.5 μ
1	5.5							
2	7.1							
3	5.1							
4	10.8							
5	7.8	100.0	100.0	64.8	51.7	25.3	12.9	9.5
6	8.2	100.0	100.0	52.0	41.8	20.3	9.5	5.9
7	14.1							
8	9.6							
9	5.8							
10	3.2	100.0	100.0	64.3	43.2	18.2	10.9	8.5
11	6.4							
12	2.0							
13	0.3	**						
14	0.9	**						
15	2.4							
16	2.4							
17	1.9	100.0	95.4	66.2	50.2	20.9	11.2	8.0
18	1.1							
19	2.7							
20	1.5							
21	0.6	**						
22	1.7	100.0	100.0	61.3	44.0	19.1	8.2	6.5
23	3.9							
24	7.7							
25	14.3	100.0	100.0	67.8	48.5	20.3	10.5	7.7

* No Sample Submitted
** Sample Too Small For Gradation

Gradation Test Results

Run No. 1-Y-12

Sample No.	Dust Content (mg/cu ft)	Percent Finer by Weight						
		500 μ	250 μ	74 μ	58 μ	36 μ	18 μ	14.5 μ
1	1.1	**						
2	1.4							
3	1.4	100.0	97.7	30.3				
4	16.8							
5	12.1	100.0	97.4	24.6	15.5	8.7	5.4	3.5
6	3.9	100.0	96.8	46.4	35.1	22.3	8.1	4.9
7	19.0							
8	6.6							
9	1.6							
10	2.4	100.0	98.9	22.8	14.8	11.1	3.3	3.1
11	0.3	**						
12	0.1	**						
13	4.6							
14	11.9	100.0	97.1	36.2				
15	11.6							
16	20.9							
17	15.5	100.0	95.7	29.5	18.7	12.4	4.7	4.0
18	2.6							
19	21.9							
20	2.5							
21	0.2	**						
22	0.6	**						
23	0.6	**						
24	1.3	100.0	97.0	25.0	20.6	18.3	6.5	5.0
25	5.9	100.0	96.0	30.4	18.9	14.0	4.5	3.7

* No Sample Submitted
** Sample Too Small For Gradation

Gradation Test Results

Run No. 1-Y-12a

Sample No.	Dust Content (mg/cu ft)	Percent Finer by Weight						
		500 μ	250 μ	74 μ	58 μ	36 μ	18 μ	14.5 μ
1	1.0	**						
2	1.0	**						
3	0.6	**						
4	2.4	100.0	100.0	48.8	28.8	19.7	8.9	7.7
5	1.6	100.0	100.0	33.4	22.5	12.7	6.5	5.4
6	0.9	**						
7	0.9	**						
8	0.7	**						
9	0.3	**						
10	0.5	**						
11	0.1	**						
12	0.1	**						
13	0.4	**						
14	0.5	**						
15	0.9	**						
16	1.2							
17	1.8	100.0	100.0	55.4	38.8	19.4	13.0	7.0
18	0.9	**						
19	3.5	100.0	100.0	55.0	40.3	21.8	10.9	7.6
20	1.9							
21	0.1	**						
22	0.9	**						
23	0.5	**						
24	1.1	**						
25	2.1	100.0	100.0	44.8	35.9	16.5	7.3	5.1

* No Sample Submitted
** Sample Too Small For Gradation

Gradation Test Results

Run No. 1-Y-13

Sample No.	Dust Content (mg/cu ft)	Percent Finer by Weight						
		500 μ	250 μ	74 μ	58 μ	36 μ	18 μ	14.5 μ
1	0.3	**						
2	0.6	**						
3	0.6	**						
4	4.1	100.0	93.2	28.6				
5	2.3	100.0	96.9	49.4	30.9	21.1	6.1	4.0
6	1.2	100.0	97.3	60.8	49.6	40.0	12.3	9.1
7	1.6	100.0	98.7	58.6				
8	1.4	100.0	99.6	69.5				
9	1.7	100.0	99.3	59.3				
10	----							
11	0.6	**						
12	----							
13	0.3	**						
14	0.3	**						
15	0.5	**						
16	1.1	**						
17	1.4	98.[illegible]	95.3	62.3	48.3	37.1	11.3	8.2
18	0.5	[illegible]						
19	1.8	100.0	96.5	67.6	56.3	[illegible].4	12.8	9.2
20	0.5	**						
21	----	**						
22	0.6	**						
23	0.6	**						
24	0.3	**						
25	0.3	100.0	94.7	52.8	42.8	36.8	13.5	7.9

* No Sample Submitted

** Sample Too Small For Gradation

Gradation Test Results

Run No. 1-Y-14

Sample No.	Dust Content (mg/cu ft)	Percent Finer by Weight						
		500 μ	250 μ	74 μ	58 μ	36 μ	18 μ	14.5 μ
1	2.6							
2	4.8							
3	3.9	100.0	94.4	38.4				
4	13.1							
5	14.5	100.0	96.6	27.7	20.0	13.7	6.5	4.4
6	10.1	100.0	97.6	43.7	32.6	24.7	9.8	7.3
7	15.3							
8	5.8							
9	3.1							
10	1.7	100.0	96.8	38.4	28.6	22.7	13.0	10.0
11	3.2							
12	2.6							
13	2.3							
14	0.9	**						
15	3.8							
16	3.8							
17	6.4	100.0	96.5	43.8	32.7	17.2	8.1	6.6
18	3.3							
19	11.9							
20	5.3							
21	2.0	100.0	100.0	49.3				
22	11.4	100.0	98.6	45.2	36.8	25.0	11.7	9.7
23	4.7							
24	2.0							
25	7.4	100.0	94.6	43.3	32.7	21.5	9.7	7.7

* No Sample Submitted
** Sample Too Small For Gradation

Gradation Test Results

Run No. 1-Y-15

Sample No.	Dust Content (mg/cu ft)	Percent Finer by Weight						
		500 µ	250 µ	74 µ	58 µ	38 µ	24 µ	14.5 µ
1	0.7	**						
2	1.1	**						
3	1.0	**						
4	1.9	100.0	94.2	33.2				
5	2.3	100.0	93.7	34.6	24.5	19.8	9.3	7.4
6	2.1	100.0	95.5	49.0	38.7	22.7	9.2	8.6
7	1.0	**						
8	1.3	100.0	94.6	57.6				
9	0.1	**						
10	1.2	100.0	86.2	41.3				
11	0.9	**						
12	0.6	**						
13	0.6	**						
14	0.8	**						
15	1.3	100.0	90.5	51.8				
16	1.2	100.0	94.5	61.5				
17	1.2	100.0	91.5	60.1	52.0	35.3	18.4	15.6
18	0.4	**						
19	1.7	100.0	94.9	53.5				
20	0.6	**						
21	0.4	**						
22	1.6	100.0	97.2	63.1	44.2	27.1	14.3	11.6
23	1.4	100.0	95.6	49.0				
24	----							
25	2.6	100.0	94.2	60.9	44.1	36.5	19.2	17.5

* No Sample Submitted
** Sample Too Small For Gradation

Gradation Test Results

Run No. 1-Y-16

Sample No.	Dust Content (mg/cu ft)	Percent Finer by Weight						
		500 μ	250 μ	74 μ	58 μ	36 μ	18 μ	14.5 μ
1	0.7	**						
2	0.8	**						
3	1.0	**						
4	7.4	100.0	94.8	23.[illegible]				
5	3.8	100.0	31.[illegible]	22.0	14.[illegible]	19.[illegible]	6.4	4.6
6	1.7	100.0	94.5	39.0	31.3	25.6	11.5	9.1
7	4.6							
8	1.2							
9	0.4	**						
10	0.6	**						
11	0.4	**						
12	0.4	**						
13	0.2	**						
14	0.6	**						
15	0.7	**						
16	1.5	100.0	93.8	20.9				
17	1.1	**						
18	0.4	**						
19	1.7	100.0	94.2	39.3				
20	0.4	**						
21	----							
22	0.6	**						
23	0.6	**						
24	3.0	100.0	90.2	31.4	23.9	18.5	11.6	10.1
25	3.0	100.0	89.2	39.6	30.6	21.5	9.7	8.0

* No Sample Submitted
** Sample Too Small For Gradation

Gradation Test Results

Run No. 1-Y-17

Sample No.	Dust Content (mg/cu ft)	Percent Finer by Weight						
		500 μ	250 μ	74 μ	58 μ	36 μ	18 μ	14.5 μ
1	0.7	**						
2	0.9	**						
3	0.6	**						
4	2.4	100.0	87.4	29.6	29.5	27.9	12.6	[illegible].0
5	1.6	100.0	85.5	31.0				
6	0.9	**						
7	1.3							
8	0.7	**						
9	0.3	**						
10	----							
11	0.4	**						
12	----							
13	0.3	**						
14	0.7	**						
15	1.5	100.0	81.9	33.0	30.8	15.0	5.7	4.6
16	1.3	100.0	84.8	21.8				
17	0.9	**						
18	----							
19	----							
20	----							
21	----							
22	0.8	**						
23	0.5	**						
24	0.3	**						
25	1.9	100.0	87.4	31.8	31.7	14.1	5.9	5.0

* No Sample Submitted
** Sample Too Small For Gradation

Gradation Test Results

Run No. 1-Y-18

Sample No.	Dust Content (mg/cu ft)	Percent Finer by Weight						
		500 μ	150 μ	74 μ	58 μ	36 μ	18 μ	14.5 μ
1	0.9	**						
2	1.3							
3	1.4	100.0	97.7	50.1				
4	2.0							
5	4.4	100.0	92.9	35.3	29.3	20.2	8.2	7.0
6	3.2	100.0	95.3	45.3	35.6	24.5	10.7	8.5
7	5.0							
8	1.0	**						
9	0.5	**						
10	0.6	**						
11	0.3	**						
12	0.3	**						
13	0.2	**						
14	0.3	**						
15	0.2	**						
16	1.0	**						
17	0.4	**						
18	0.2	**						
19	1.4	100.0	80.9	17.1				
20	0.3	**						
21	0.5	**						
22	0.9	**						
23	1.1	**						
24	2.7	100.0	93.8	20.9				
25	0.5	**						

* No Sample Submitted
** Sample Too Small For Gradation

Gradation Test Results

Run No. 1-Y-19

Sample No.	Dust Content (mg/cu ft)	Percent Finer by Weight						
		500 μ	250 μ	74 μ	58 μ	36 μ	18 μ	14.5 μ
1	14.3							
2	19.7							
3	16.8	100.0	94.7	48.0				
4	29.6							
5	35.6	99.9	92.4	28.2	23.9	14.6	5.8	4.8
6	46.3	99.8	91.8	35.9	31.3	19.3	8.2	5.6
7	20.5							
8	45.0							
9	--							
10	36.7	99.7	92.5	34.1	29.9	20.8	7.5	5.8
11	28.1							
12	11.1							
13	14.4							
14	17.4							
15	38.3							
16	29.3							
17	34.9	99.3	89.8	38.2	32.7	21.5	8.7	7.0
18	19.2							
19	38.1							
20	5.7							
21	21.4	100.0	92.8	45.9				
22	35.2	99.4	94.0	44.6	40.2	30.2	12.7	8.4
23	26.7							
24	27.8							
25	56.3	99.5	90.9	29.2	24.6	16.2	5.2	4.5

* No Sample Submitted
** Sample Too Small For Gradation

Gradation Test Results

Run No. 1-Y-20

Sample No.	Dust Content (mg/cu ft)	Percent Finer by Weight						
		500 μ	250 μ	74 μ	58 μ	36 μ	18 μ	14.5 μ
1	33.8							
2	51.5							
3	37.1							
4	66.5							
5	63.9	100.0	92.2	20.9	14.1	8.6	6.8	6.1
6	62.5	99.8	92.8	16.7	14.7	11.3	4.7	2.5
7	50.0							
8	33.8							
9	14.5							
10	24.7	100.0	91.2	19.1	13.1	5.4	3.3	2.3
11	20.0							
12	13.4							
13	10.5							
14	10.0							
15	18.2							
16	14.9							
17	22.6	99.8	93.8	36.9	24.1	8.5	3.5	2.2
18	13.3							
19	32.7							
20	18.0							
21	14.2							
22	20.2	99.9	91.6	36.4	26.7	12.4	5.8	4.0
23	15.9							
24	48.9							
25	45.8	99.9	90.8	29.4	20.2	11.1	6.1	4.8

* No Sample Submitted

** Sample Too Small For Gradation

Gradation Test Results

Run No. 1-Y-109a

Sample No.	Dust Content (mg/cu ft)	Percent Finer by Weight						
		500 μ	250 μ	74 μ	58 μ	36 μ	18 μ	14.5 μ
1	6.7							
2	9.9							
3	10.7							
4	17.9							
5	27.6	100.0	94.5	18.1	16.3	12.3	4.2	3.1
6	25.0	100.0	96.4	11.4	10.5	7.4	3.2	2.1
7	16.6							
8	19.0							
9	12.9							
10	10.8	99.8	93.0	33.0	27.0	20.5	7.1	5.1
11	8.4							
12	3.3							
13	2.8							
14	3.7							
15	7.5							
16	4.7							
17	8.9	100.0	96.9	40.2	32.4	21.7	7.8	6.7
18	3.7							
19	5.0							
20	5.4							
21	11.3							
22	8.8	100.0	96.8	60.9	50.3	32.9	16.5	9.6
23	16.0							
24	20.4							
25	16.5	100.0	94.4	39.9	32.8	22.5	10.0	7.7

* No Sample Submitted
** Sample Too Small For Gradation

Gradation Test Results

Run No. 1-Y-113

Sample No.	Dust Content (mg/cu ft)	Percent Finer by Weight						
		500 μ	250 μ	74 μ	58 μ	36 μ	18 μ	14.5 μ
1	0.6	**						
2	0.6	**						
3	1.0	**						
4	2.0							
5	2.9	100.0	99.0	54.8	44.4	28.3	15.0	11.9
6	1.8	100.0	100.0	72.8	62.2	44.3	19.6	14.0
7	2.2							
8	2.3							
9	----	**						
10	1.5	100.0	100.0	64.0	49.1	39.0	17.0	12.7
11	0.4	**						
12	0.2	**						
13	0.4	**						
14	0.5	**						
15	2.0							
16	1.4							
17	1.6	100.0	100.0	61.6	50.8	40.5	13.1	11.7
18	0.8	**						
19	0.9	**						
20	----							
21	0.1	**						
22	0.9	**						
23	0.6	**						
24	1.0	**						
25	0.7	**						

* No Sample Submitted
** Sample Too Small For Gradation

Gradation Test Results

Run No. 1-Y-115

Sample No.	Dust Content (mg/cu ft)	Percent Finer by Weight						
		500 μ	250 μ	74 μ	58 μ	36 μ	18 μ	14.5 μ
1	0.8	**						
2	1.5							
3	2.7							
4	3.9							
5	8.6	100.0	97.3	39.9	33.6	26.8	9.3	6.9
6	5.5	100.0	99.5	40.6	33.1	22.2	10.0	6.9
7	3.7							
8	3.4							
9	----	**						
10	1.7	100.0	100.0	44.7	36.9	31.2	10.5	8.2
11	0.9	**						
12	1.2							
13	2.3							
14	1.5							
15	3.5							
16	1.9							
17	3.5	100.0	93.0	52.7	41.7	30.8	13.6	10.0
18	0.6	**						
19	3.1							
20	2.7	100.0	88.9	33.4	27.8	15.0	8.8	6.8
21	0.1	**						
22	0.5	**						
23	0.1	**						
24	2.6	100.0	94.2	24.5	18.0	12.2	6.3	4.8
25	0.8	**						

* No Sample Submitted
** Sample Too Small For Gradation

Gradation Test Results

Proj No. 1-Y-117

Sample No.	Dust Content (mg/cu ft)	Percent Finer by Weight						
		500 μ	250 μ	74 μ	52 μ	36 μ	18 μ	14.5 μ
1	0.4	**						
2	1.2							
3	1.0	**						
4	0.7	**						
5	2.3	100.0	93.6	39.0	31.7	21.6	11.2	8.1
6	1.5	97.7	93.1	46.5	37.8	20.2	11.3	8.5
7	0.9	**						
8	0.6	**						
9	----	**						
10	0.9	**						
11	0.8	**						
12	1.0	**						
13	2.0	100.0	87.2	17.2	13.7	11.7	5.6	4.4
14	1.4							
15	2.4	100.0	88.4	29.1	23.3	17.6	9.4	7.1
16	0.5	**						
17	1.7	100.0	85.0	48.4	39.9	28.4	15.9	11.4
18	0.1	**						
19	1.3							
20	1.1	**						
21	1.1							
22	1.0	**						
23	0.3	**						
24	1.9	100.0	87.7	23.1	18.9	16.3	9.9	7.9
25	0.9	**						

* No Sample Submitted
** Sample Too Small For Gradation

Gradation Test Results

Run No. 2-Y-1

Sample No.	Dust Content (mg/cu ft)	Percent Finer by Weight						
		500 μ	250 μ	74 μ	58 μ	36 μ	18 μ	14.5 μ
1	----							
2	2.1	99.7	99.2	66.6				
3	3.5	95.7	92.0	64.7				
4	----							
5	9.8	99.6	97.9	43.6	34.9	22.5	10.8	8.8
6	5.3	100.0	98.8	67.2	60.5	33.7	17.3	12.8
7	5.1	100.0	99.3	71.2				
8	3.9	98.8	97.8	62.2				
9	1.4	100.0	99.4	59.3				
10	3.5	100.0	98.3	64.9	52.5	34.8	20.3	14.6
11	1.8	100.0	97.3	77.9				
12	0.5	**						
13	1.4	98.5	94.9	64.6				
14	3.2	100.0	96.8	66.3				
15	3.5	100.0	94.3	53.5				
16	1.3	100.0	96.0	69.1				
17	4.2	97.2	94.3	64.0	53.3	30.6	18.3	11.6
18	1.6	98.4	96.0	64.9				
19	5.6	100.0	98.8	61.8				
20	2.0	100.0	98.5	39.1				
21	2.6	100.0	99.3	65.1				
22	3.2	100.0	98.7	68.5	55.9	40.8	18.1	13.6
23	1.0	*						
24	1.3	96.7	87.3	40.8				
25	1.4	98.6	96.1	69.7	57.7	34.2	19.8	12.9

* No Sample Submitted
** Sample Too Small For Gradation

Gradation Test Results

Run No. 2-Y-2

Sample No.	Dust Content (mg/cu ft)	Percent Finer by Weight						
		500 μ	250 μ	74 μ	58 μ	36 μ	18 μ	14.5 μ
1	4.1	100.0	99.7	50.8				
2	9.4	100.0	99.7	50.5				
3	10.0	100.0	99.5	58.2				
4	28.8	99.8	99.4	51.9				
5	24.5	100.0	99.8	42.7	36.6	23.4	10.2	7.6
6	3.5	100.0	99.4	60.1	53.7	33.5	16.4	11.6
7	13.1	100.0	99.8	58.2				
8	8.9	100.0	99.8	63.0				
9	3.8	100.0	97.2	38.0				
10	4.8	100.0	99.4	66.7	52.3	35.8	16.9	10.7
11	5.4	100.0	99.6	72.1				
12	----							
13	6.4	100.0	98.7	63.3				
14	4.7	99.4	98.2	65.1				
15	9.1	100.0	98.6	52.8				
16	2.8	100.0	99.1	54.9				
17	11.4	100.0	99.3	58.1	51.6	35.5	17.1	11.7
18	5.3	100.0	99.5	68.1				
19	21.3	100.0	97.8	40.9				
20	5.7	100.0	99.5	52.9				
21	4.5	100.0	100.0	54.9				
22	18.5	100.0	99.9	28.1	26.4	18.6	9.1	5.8
23	5.1	100.0	99.5	66.3				
24	3.8	100.0	97.8	22.2				
25	6.2	100.0	99.6	58.6	49.0	31.4	16.0	7.6

* No Sample Submitted
** Sample Too Small For Gradation

Gradation Test Results

Run No. 2-V-3

Sample No.	Dust Content (mg/cu ft)	Percent Finer by Weight						
		500 μ	250 μ	74 μ	58 μ	36 μ	1[illegible]	14.5 μ
1	1.2	**						
2	3.1	100.0	100.0	85.5				
3	3.6	100.0	98.4	84.9				
4	5.8	100.0	98.8	69.2				
5	12.8	99.1	98.2	60.4	49.8	28.9	14.9	11.0
6	9.8	100.0	99.4	66.8	60.4	41.6	20.0	13.2
7	5.9	99.5	98.4	81.1				
8	4.9	99.7	97.9	52.4				
9	----	100.0	100.0	85.4				
10	5.2	100.0	98.1	78.5	74.0	58.3	27.6	20.2
11	5.9	**						
12	4.9	**						
13	4.1	100.0	99.0	77.8				
14	3.4	100.0	99.2	75.9				
15	2.8	100.0	99.5	76.2				
16	1.3	100.0	99.2	69.9				
17	5.3	100.0	98.6	56.0	69.9	43.5	25.0	16.5
18	1.9	100.0	99.3	82.1				
19	5.9	100.0	99.6	72.8				
20	3.3	100.0	98.8	75.3				
21	3.2	**						
22	5.4	100.0	100.0	81.9	78.5	60.4	33.9	21.0
23	2.5	100.0	100.0	80.0				
24	2.6	**						
25	1.0	100.0	99.2	73.6	69.1	44.4	18.2	6.3

* No Sample Submitted
** Sample Too Small For Gradation

Gradation Test Results

Run No. 2-V-4

Sample No.	Dust Content (mg/cu ft)	Percent Finer by Weight						
		500 μ	250 μ	74 μ	58 μ	36 μ	18 μ	14.5 μ
1	3.8							
2	7.7							
3	8.9	100.0	100.0	37.4				
4	16.6							
5	19.7	100.0	99.3	45.8	37.1	23.0	12.0	8.0'
6	18.6	100.0	99.6	25.3	22.1	16.5	8.3	5.3
7	11.0							
8	5.9							
9	1.9							
10	8.2	100.0	99.4	30.2	20.3	10.3	5.9	4.5
11	6.4							
12	4.9							
13	5.1							
14	4.7							
15	5.4							
16	2.7							
17	7.5	100.0	100.0	35.5	28.6	14.2	7.5	5.3
18	4.6							
19	11.8							
20	6.0							
21	4.9	100.0	100.0	52.6				
22	9.6	100.0	100.0	43.1	36.7	24.0	14.9	9.6
23	6.1							
24	8.5							
25	9.9	100.0	99.1	39.8				

* No Sample Submitted
** Sample Too Small For Gradation

Gradation Test Results

Run No. 2-Y-5

Sample No.	Dust Content (mg/cu ft)	Percent Finer by Weight						
		500 μ	250 μ	74 μ	58 μ	36 μ	18 μ	14.5 μ
1	6.5							
2	12.5							
3	19.1	100.0	99.6	25.9				
4	18.1							
5	23.6	100.0	99.3	14.0	10.8	5.8	3.0	2.2
6	38.8	100.0	98.9	39.2	32.8	19.3	10.4	6.4
7	12.5							
8	11.0							
9	2.8							
10	7.9	100.0	100.0	55.8	44.6	31.1	18.7	13.7
11	9.0							
12	7.4							
13	7.7							
14	6.5							
15	12.3							
16	4.9							
17	15.1	99.7	97.9	36.9	32.3	21.2	9.8	6.5
18	6.0							
19	16.2							
20	9.1							
21	6.0	100.0	98.6	43.2				
22	8.5	100.0	100.0	68.8	59.7	42.0	20.3	13.8
23	7.7							
24	12.8							
25	7.7	100.0	96.2	42.0	35.5	14.0	6.1	4.0

* No Sample Submitted
** Sample Too Small For Gradation

Gradation Test Results

Run No. 2-Y-5

Sample No.	Dust Content (mg/cu ft)	Percent Finer by Weight						
		500 μ	250 μ	74 μ	58 μ	36 μ	18 μ	14.5 μ
1	0.6							
2	3.1							
3	1.8	100.0	99.2	52.1				
4	2.4							
5	3.3	100.0	97.7	32.5	28.9	20.8	12.7	8.2
6	9.4	100.0	100.0	47.0	40.8	30.8	15.2	10.8
7	5.3							
8	9.0							
9	2.3							
10	1.5	100.0	99.5	27.5	25.8	19.8	12.9	8.9
11	1.0							
12	0.6							
13	3.1							
14	3.8							
15	6.4							
16	3.2							
17	11.8	100.0	99.0	20.4	17.7	11.3	7.5	5.0
18	3.6							
19	6.9							
20	2.7							
21	0.2	100.0	100.0	43.2				
22	2.2	100.0	99.5	57.6	51.4	36.5	21.4	14.2
23	1.4							
24	0.6							
25	3.8	100.0	98.5	23.4	21.9	18.1	12.1	8.5

* No Sample Submitted
** Sample Too Small For Gradation

Gradation Test Results

Run No. 2-Y-7

Sample No.	Dust Content (mg/cu ft)	Percent Finer by Weight						
		500 μ	250 μ	74 μ	58 μ	36 μ	18 μ	14.5 μ
1	0.3	**						
2	0.6	**						
3	2.7							
4	2.9							
5	7.9	100.0	100.0	30.8	26.8	15.5	8.1	4.9
6	4.6	100.0	100.0	13.0	11.0	6.9	3.7	2.5
7	4.0							
8	3.7							
9	3.3							
10	2.8	100.0	100.0	34.8	28.2	15.1	6.5	1.4
11	1.8							
12	1.2							
13	1.4							
14	1.4							
15	2.3							
16	2.4							
17	4.5	100.0	100.0	20.0	19.0	12.0	7.8	5.1
18	2.6							
19	6.0							
20	2.3							
21	3.1							
22	7.0	100.0	100.0	29.2	27.4	19.9	13.8	9.4
23	1.9							
24	4.0							
25	2.0	100.0	100.0	72.0	60.4	39.7	17.4	11.1

* No Sample Submitted
** Sample Too Small For Gradation

Gradation Test Results

Run No. 2-Y-8

Sample No.	Dust Content (mg/cu ft)	Percent Finer by Weight						
		500 μ	250 μ	74 μ	58 μ	36 μ	18 μ	14.5 μ
1	0.2	**						
2	0.6	**						
3	0.9	**						
4	1.1	**						
5	5.5	100.0	100.0	60.7	46.8	23.7	13.1	8.6
6	1.1	**						
7	1.5	100.0	100.0	77.1	61.6	23.4	13.0	9.9
8	2.0							
9	1.4							
10	2.0	100.0	100.0	79.7	58.7	33.4	18.1	10.4
11	1.2							
12	0.6	**						
13	1.1							
14	1.4	100.0	100.0	65.4				
15	1.9							
16	1.0	**						
17	2.3	100.0	100.0	73.2	57.8	38.1	20.4	10.5
18	1.1							
19	2.8							
20	1.2							
21	1.0	**						
22	3.0	100.0	100.0	51.0	46.8	37.2	18.3	10.8
23	1.0	**						
24	1.2	100.0	100.0	53.7				
25	1.1	**						

* No Sample Submitted
** Sample Too Small For Gradation

Gradation Test Results

Run No. 2-Y-9

Sample No.	Dust Content (mg/cu ft)	Percent Finer by Weight						
		500 μ	250 μ	74 μ	58 μ	36 μ	18 μ	14.5 μ
1	0.2	**						
2	0.7	**						
3	0.6	**						
4	0.9	**						
5	4.2	100.0	100.0	72.9	59.5	35.1	16.5	10.1
6	2.4	100.0	100.0	90.0	88.7	75.3	52.7	34.0
7	0.8	**						
8	1.1							
9	0.6	**						
10	1.0	100.0	100.0	80.0	73.9	53.0	33.3	19.4
11	0.4	**						
12	0.2	**						
13	0.5	**						
14	0.4	**						
15	1.1							
16	0.3	**						
17	1.2	100.0	100.0	92.9	86.1	58.5	30.3	15.8
18	0.6	**						
19	1.5							
20	0.9	**						
21	0.3	**						
22	2.3	100.0	100.0	86.1	80.2	56.2	36.2	22.1
23	1.1							
24	1.7	100.0	100.0	89.5	80.8	53.6	30.1	19.4
25	0.9	**						

* No Sample Submitted
** Sample Too Small For Gradation

Gradation Test Results

Run No. 2-Y-10

Sample No.	Dust Content (mg/cu ft)	Percent Finer by Weight						
		500 μ	250 μ	74 μ	58 μ	36 μ	18 μ	14.5 μ
1	0.8	**						
2	3.1							
3	3.6							
4	9.0							
5	11.1	96.9	96.8	60.0	49.0	32.6	20.2	13.3
6	7.5	100.0	98.8	58.4	51.5	36.5	26.3	17.5
7	4.9							
8	3.3							
9	2.1							
10	3.2	100.0	97.2	76.7	69.4	52.7	39.7	13.2
11	4.2							
12	5.0							
13	6.5							
14	5.5							
15	4.8							
16	2.7							
17	4.7	100.0	98.3	67.8	64.6	51.0	38.0	25.5
18	3.0							
19	3.7							
20	1.6							
21	4.9							
22	13.6	100.0	99.2	69.2	62.4	43.9	31.3	19.6
23	6.9							
24	7.0							
25	7.1	100.0	95.4	53.4	46.0	29.4	17.2	9.8

* No Sample Submitted
** Sample Too Small For Gradation

Gradation Test Results

Run No. 2-Y-11

Sample No.	Dust Content (mg/cu ft)	Percent Finer by Weight						
		500 μ	250 μ	74 μ	58 μ	36 μ	18 μ	14.5 μ
1	3.9							
2	6.0							
3	6.0							
4	6.0							
5	8.5	100.0	100.0	68.9	56.7	30.8	18.4	12.6
6	8.8	100.0	100.0	31.6	28.5	19.8	12.0	7.5
7	6.0							
8	4.2							
9	1.1							
10	5.6	100.0	100.0	78.8	71.4	49.0	29.0	19.1
11	7.9							
12	5.6							
13	5.7							
14	5.4							
15	6.3							
16	1.5							
17	6.9	100.0	100.0	78.1	67.0	41.9	27.0	17.3
18	1.8							
19	5.8							
20	4.8							
21	6.0							
22	11.4	100.0	100.0	87.8	80.2	54.4	31.3	18.0
23	6.9							
24	13.0							
25	10.1	100.0	100.0	75.6	62.5	34.5	21.4	15.2

* No Sample Submitted
** Sample Too Small For Gradation

Gradation Test Results

Run No. 2-Y-12

Sample No.	Dust Content (mg/cu ft)	Percent Finer by Weight						
		500 μ	250 μ	74 μ	58 μ	36 μ	18 μ	14.5 μ
1	4.0							
2	5.9							
3	6.5							
4	6.7							
5	5.9	100.0	100.0	80.5	75.2	58.0	32.2	22.9
6	7.0	100.0	100.0	53.4	51.7	42.9	19.7	14.0
7	8.8							
8	7.7							
9	5.3							
10	7.8	100.0	100.0	50.6	48.4	39.5	20.6	14.3
11	7.5							
12	3.2							
13	5.4							
14	4.0							
15	5.4							
16	2.8							
17	5.3	100.0	100.0	53.2	50.8	39.3	22.5	15.2
18	2.0							
19	4.6							
20	2.4							
21	3.7							
22	8.3	100.0	100.0	43.4	42.5	35.8	20.1	14.4
23	10.8							
24	14.0							
25	16.8	100.0	100.0	57.5	54.6	42.5	21.8	15.2

* No Sample Submitted
** Sample Too Small For Gradation

Gradation Test Results

Run No. 2-Y-13

Sample No.	Dust Content (mg/cu ft)	Percent Finer by Weight						
		500 μ	250 μ	74 μ	58 μ	36 μ	18 μ	14.5 μ
1	10.8							
2	16.1							
3	13.9							
4	13.1							
5	16.4	100.0	100.0	62.2	57.7	39.0	25.4	15.1
6	14.9	100.0	100.0	39.9	38.6	27.3	15.0	10.4
7	16.6							
8	13.3							
9	8.7							
10	10.8	100.0	100.0	67.9	62.4	43.2	26.3	9.9
11	7.9							
12	5.7							
13	8.9							
14	7.5							
15	10.3							
16	6.6							
17	8.9	100.0	100.0	28.2	25.8	17.3	9.2	5.1
18	4.6							
19	9.6							
20	7.1							
21	12.7							
22	22.1	100.0	99.9	52.0	49.5	35.3	21.5	13.2
23	14.2							
24	24.4							
25	16.9	100.0	100.0	52.7	49.3	31.5	17.0	11.0

* No Sample Submitted
** Sample Too Small For Gradation

Gradation Test Results

Run No. 2-Y-14

Sample No.	Dust Content (mg/cu ft)	Percent Finer by Weight						
		500 μ	250 μ	74 μ	58 μ	36 μ	18 μ	14.5 μ
1	6.7							
2	9.6							
3	8.7							
4	10.8							
5	14.2	100.0	100.0	70.9	62.6	37.2	25.2	17.2
6	14.4	100.0	100.0	75.0	69.4	47.5	29.9	20.2
7	14.1							
8	9.6							
9	5.9							
10	11.0	100.0	100.0	43.4	39.8	24.2	14.8	9.5
11	9.0							
12	5.9							
13	7.2							
14	8.3							
15	11.3							
16	5.8							
17	10.3	100.0	100.0	78.9	72.6	49.7	32.7	22.2
18	4.3							
19	8.7							
20	5.7							
21	8.6							
22	15.5	100.0	100.0	41.7	39.1	25.7	15.9	10.0
23	11.7							
24	19.1							
25	20.2	100.0	100.0	49.1	34.4	26.4	11.7	7.6

* No Sample Submitted
** Sample Too Small For Gradation

Gradation Test Results

Run No. 2-Y-15

Sample No.	Dust Content (mg/cu ft)	Percent Finer by Weight						
		500 μ	250 μ	74 μ	55 μ	36 μ	18 μ	14.5 μ
1	11.2							
2	13.4							
3	12.7							
4	17.8							
5	23.4	100.0	98.7	50.5	45.0	29.9	19.7	12.2
6	15.3	100.0	99.6	54.8	50.5	34.7	32.6	13.8
7	15.0							
8	6.0							
9	4.8							
10	6.7							
11	8.3							
12	6.7							
13	12.3	100.0	99.6	44.7	40.7	28.0	18.4	12.3
14	8.3							
15	6.5							
16	4.9							
17	5.6	100.0	100.0	32.7	29.7	18.3	10.8	7.3
18	5.0							
19	6.3							
20	5.4							
21	13.7							
22	19.2	100.0	100.0	63.8	57.5	41.7	26.3	17.0
23	13.4							
24	19.6							
25	15.9	100.0	97.2	38.0	27.7	14.7	8.2	5.4

* No Sample Submitted
** Sample Too Small For Gradation

Gradation Test Results

Run No. 2-Y-16

Sample No.	Dust Content (mg/cu ft)	Percent Finer by Weight						
		500 μ	250 μ	74 μ	58 μ	36 μ	18 μ	14.5 μ
1	8.2							
2	20.3							
3	27.0							
4	39.6							
5	44.8	100.0	98.6	45.2	32.9	17.4	12.6	7.9
6	41.5	100.0	99.2	51.2	38.6	29.5	19.9	9.0
7	34.1							
8	20.1							
9	12.2							
10	23.3	100.0	97.2	45.5	41.9	26.5	17.0	10.4
11	20.7							
12	14.0							
13	9.9							
14	10.5							
15	16.2							
16	5.4							
17	18.6	100.0	99.3	66.2	57.9	38.5	24.3	16.2
18	11.4							
19	26.2							
20	17.6							
21	16.7							
22	32.4	100.0	99.3	45.8	44.4	36.0	17.1	12.1
23	15.8							
24	43.0							
25	38.6	100.0	99.3	55.4	48.5	34.0	20.9	13.9

* No Sample Submitted
** Sample Too Small For Gradation

Gradation Test Results

Run No. 2-Y-17

Sample No.	Dust Content (mg/cu ft)	Percent Finer by Weight						
		500 µ	250 µ	74 µ	54 µ	36 µ	18 µ	14.5 µ
1	3.2							
2	4.6							
3	6.0							
4	5.8							
5	12.8	100.0	98.2	40.4	35.2	23.2	14.1	8.7
6	8.0	100.0	98.1	52.7	50.0	42.6	27.9	19.5
7	5.1							
8	5.0							
9	2.2							
10	4.0	100.0	100.0	61.4	56.0	45.2	16.6	13.0
11	2.5							
12	1.7							
13	3.7							
14	4.0							
15	6.4							
16	1.1	**						
17	5.5	100.0	97.5	51.1	44.9	26.5	15.3	10.8
18	2.2							
19	6.0							
20	2.7							
21	4.0							
22	6.2	100.0	100.0	75.6	72.7	52.5	33.2	19.0
23	3.4							
24	4.3							
25	5.8	100.0	99.0	46.7	40.2	24.9	13.0	7.9

* No Sample Submitted
** Sample Too Small For Gradation

Gradation Test Results

Run No. 2-Y-18

Sample No.	Dust Content (mg/cu ft)	Percent Finer by Weight						
		500 μ	250 μ	74 μ	58 μ	36 μ	18 μ	14.5 μ
1	0.3	**						
2	0.5	**						
3	0.9	**						
4	0.2	**						
5	3.5	100.0	95.8	44.6	35.5	25.5	12.3	8.6
6	0.8	**						
7	0.3	**						
8	0.6	**						
9	0.1	**						
10	0.4	**						
11	0.3	**						
12	0.3	**						
13	0.3	**						
14	0.3	**						
15	0.5	**						
16	1.4	100.0	100.0	90.0	85.0	75.3	55.4	36.0
17	0.8	**						
18	0.3	**						
19	0.9	**						
20	0.3	**						
21	0.3	**						
22	0.6	**						
23	1.3	100.0	100.0	54.4	28.4	12.1	8.7	6.9
24	0.7	**						
25	0.7	**						

* No Sample Submitted
** Sample Too Small For Gradation

Gradation Test Results

Run No. 2-Y-19

Sample No.	Dust Content (mg/cu ft)	Percent Finer by Weight						
		500 μ	250 μ	74 μ	58 μ	36 μ	18 μ	14.5 μ
1	0.3	**						
2	0.3	**						
3	1.2	**						
4	0.4	**						
5	7.6	100.0	100.0	42.1	31.9	14.2	11.2	7.6
6	1.5	100.0	100.0	62.5	51.2	32.8	21.5	12.6
7	0.7	**						
8	0.5	**						
9	0.4	**						
10	0.9	**						
11	0.4	**						
12	0.5	**						
13	0.3	**						
14	0.3	**						
15	--							
16	0.3	**						
17	1.4	100.0	100.0	80.9	75.2	48.0	33.0	20.7
18	0.5	**						
19	0.5	**						
20	0.3	**						
21	1.7							
22	5.3	100.0	100.0	61.6	57.6	34.2	21.1	14.4
23	1.8							
24	4.6							
25	1.5	100.0	100.0	77.8	58.4	27.8	16.4	10.3

* No Sample Submitted
** Sample Too Small For Gradation

Gradation Test Results

Run No. 2-Y-20

Sample No.	Dust Content (mg/cu ft)	Percent Finer by Weight						
		500 μ	250 μ	74 μ	58 μ	36 μ	18 μ	14.5 μ
1	2.6							
2	5.4							
3	8.3							
4	6.3							
5	28.6	100.0	99.9	53.1	39.9	16.7	11.6	7.5
6	12.8	100.0	99.8	71.6	55.5	37.1	21.3	13.8
7	8.9							
8	8.0							
9	3.1							
10	8.5	100.0	100.0	62.0	57.0	35.3	21.7	12.9
11	6.2							
12	5.8							
13	5.7							
14	4.1							
15	5.3							
16	3.0							
17	7.5	100.0	100.0	81.5	71.4	43.0	24.4	15.1
18	2.5							
19	6.2							
20	5.0							
21	2.8							
22	2.8	100.0	100.0	81.9	73.5	37.5	19.6	11.3
23	2.0							
24	13.0							
25	7.7	100.0	100.0	73.0	58.9	29.5	17.0	9.7

* No Sample Submitted
** Sample Too Small For Gradation

Gradation Test Results

Run No. 2-Y-21

Sample No.	Dust Content (mg/cu ft)	Percent Finer by Weight						
		500 μ	250 μ	74 μ	58 μ	36 μ	18 μ	12.5 μ
1	9.4							
2	15.3							
3	16.3							
4	12.5							
5	33.6	100.0	99.3	53.5	47.4	34.3	17.6	12.1
6	26.8	100.0	99.7	62.9	58.9	44.0	24.4	15.5
7	16.3							
8	8.3							
9	0.6	**						
10	10.8	100.0	97.7	74.0	67.0	40.0	19.2	10.3
11	10.4							
12	8.2							
13	7.4							
14	6.0							
15	8.3							
16	1.9							
17	11.5	100.0	99.3	77.7	68.9	39.0	22.8	13.8
18	2.6							
19	11.6							
20	7.8							
21	9.8							
22	18.0	100.0	99.9	77.9	71.3	44.2	26.7	14.8
23	3.9							
24	25.3							
25	14.3	99.6	98.6	69.9	58.2	26.2	14.8	9.0

* No Sample Submitted
** Sample Too Small For Gradation

Gradation Test Results

Run No. 2-Y-22

Sample No.	Dust Content (mg/cu ft)	Percent Finer by Weight						
		500 µ	250 µ	74 µ	58 µ	36 µ	18 µ	14.5 µ
1	1.2							
2	0.8	**						
3	1.8							
4	2.5							
5	10.5	100.0	100.0	47.1	35.9	24.1	14.9	10.9
6	5.1	100.0	100.0	50.0	44.0	26.8	13.8	7.8
7	3.1							
8	1.9							
9	1.4							
10	2.1	100.0	100.0	71.5	60.0	37.8	20.8	12.9
11	2.4							
12	1.1	**						
13	3.5							
14	3.1							
15	1.6							
16	0.9	**						
17	1.7	100.0	100.0	63.7	47.7	25.6	12.8	9.4
18	1.1							
19	1.7							
20	1.3							
21	2.8							
22	3.1	100.0	100.0	77.9	70.9	45.5	27.1	17.7
23	1.5							
24	3.2							
25	2.9	100.0	97.9	66.4	51.7	29.0	15.3	11.2

* No Sample Submitted
** Sample Too Small For Gradation

Gradation Test Results

Run No. 2-Y-23

Sample No.	Dust Content (mg/cu ft)	Percent Finer by Weight						
		500 μ	250 μ	74 μ	58 μ	36 μ	18 μ	14.5 μ
1	1.8							
2	5.1							
3	3.6							
4	2.9	100.0	100.0	88.9	81.7	54.5	32.2	19.0
5	--	100.0	100.0	90.4	85.9	58.0	37.2	21.4
6	3.9							
7	3.9							
8	4.0							
9	--							
10	3.2	100.0	100.0	88.6	83.1	49.3	30.1	20.9
11	2.1							
12	1.3							
13	2.3							
14	2.0							
15	3.5							
16	1.5							
17	2.4	100.0	100.0	87.5	81.8	44.8	25.6	14.2
18	0.5							
19	0.9							
20	1.5							
21	3.4							
22	8.6	100.0	99.4	73.2	68.1	42.0	24.2	14.4
23	1.1							
24	5.9							
25	3.6	100.0	100.0	83.4	73.8	42.6	21.0	12.5

* No Sample Submitted
** Sample Too Small For Gradation

Gradation Test Results

Run No. 2-Y-24

Sample No.	Dust Content (mg/cu ft)	Percent Finer by Weight						
		500 μ	250 μ	74 μ	58 μ	36 μ	18 μ	14.5 μ
1	4.4							
2	9.9							
3	13.9							
4	8.2							
5	21.8	100.0	100.0	47.8	44.0	26.7	17.4	12.1
6	19.5	100.0	100.0	33.1	31.8	19.8	13.2	9.0
7	10.7							
8	8.9							
9	0.3	**						
10	12.8	100.0	100.0	36.4	34.4	25.6	17.4	12.6
11	14.3							
12	6.1							
13	7.4							
14	7.2							
15	6.1							
16	2.7							
17	13.8	100.0	99.8	40.6	39.0	25.8	16.6	10.9
18	2.8							
19	13.1							
20	9.0							
21	11.1							
22	10.5	100.0	100.0	72.7	68.2	46.0	27.3	16.0
23	3.1							
24	17.6							
25	9.2	100.0	100.0	55.2	48.7	27.4	17.2	9.9

* No Sample Submitted
** Sample Too Small For Gradation

Gradation Test Results

Run No. 2-Y-25

Sample No.	Dust Content (mg/cu ft)	Percent Finer by Weight						
		500 μ	250 μ	74 μ	58 μ	36 μ	18 μ	14.5 μ
1	0.7	**						
2	5.5							
3	3.3							
4	3.3							
5	8.7	100.0	100.0	50.6	44.7	28.4	16.7	11.0
6	5.5	100.0	100.0	42.7	38.9	22.7	17.0	11.0
7	1.9							
8	2.5							
9	--							
10	3.8	100.0	100.0	54.7	45.3	36.3	22.0	16.7
11	2.6							
12	5.4							
13	2.3							
14	1.7							
15	6.2							
16	1.1							
17	5.6	100.0	100.0	75.2	70.0	51.2	29.3	19.3
18	0.9	**						
19	4.9							
20	3.9							
21	2.9							
22	4.5	100.0	100.0	74.3	67.2	43.6	28.8	18.5
23	0.7	**						
24	7.1							
25	4.6	100.0	100.0	65.4	56.6	37.9	19.8	14.3

* No Sample Submitted
** Sample Too Small For Gradation

Gradation Test Results

Run No. 2-Y-26

Sample No.	Dust Content (mg/cu ft)	Percent Finer by Weight						
		500 μ	250 μ	74 μ	58 μ	36 μ	18 μ	14.5 μ
1	1.2							
2	5.3							
3	5.8							
4	5.9							
5	11.1	100.0	100.0	60.2	55.7	39.5	26.1	17.3
6	8.8	100.0	100.0	46.2	44.1	34.6	19.5	13.0
7	6.3							
8	5.1							
9	--							
10	5.5	100.0	100.0	57.7	54.0	37.9	25.2	17.1
11	2.4							
12	1.2							
13	5.7							
14	6.5							
15	9.4							
16	6.5							
17	11.9	100.0	100.0	63.0	57.9	38.1	23.4	16.9
18	0.5							
19	3.5							
20	7.0							
21	4.9							
22	2.1	100.0	100.0	65.4	59.5	45.2	27.7	18.1
23	0.7							
24	6.0							
25	3.8	100.0	100.0	73.4	67.7	45.8	26.9	17.0

* No Sample Submitted
** Sample Too Small For Gradation

Gradation Test Results

Run No. B-1

Sample No.	Dust Content (mg/cu ft)	Percent Finer by Weight						
		500 μ	250 μ	74 μ	58 μ	36 μ	18 μ	14.5 μ
1	0.70							
2	4.26							
3	9.20							
4	2.38							
5	20.0	100.0	92.5	17.4	12.6	6.3	3.2	1.7
6	10.1	100.0	94.0	33.3	25.7	15.7	7.9	3.7
7	6.03							
8	6.35							
9	3.28							
10	3.43	100.0	93.2	33.4	22.8	10.6	4.0	2.2
11	4.59							
12	2.06							
13	10.8							
14	6.31							
15	17.2							
16	2.12							
17	13.9	100.0	88.3	19.3	16.0	10.9	6.3	3.3
18	3.02							
19	6.78							
20	--							
21	3.27							
22	10.8	99.8	99.0	18.7	17.0	12.8	8.6	5.2
23	5.22							
24	10.9							
25	6.01	99.1	94.7	25.9	19.1	7.8	1.8	0.3

* No Sample Submitted
** Sample Too Small For Gradation

Gradation Test Results.

Run No. B-2

Sample No.	Dust Content (mg/cu ft)	Percent Finer by Weight						
		500 μ	250 μ	74 μ	58 μ	36 μ	18 μ	14.5 μ
1	2.91							
2	0.80							
3	0.95							
4	0.87							
5	2.09	97.2	90.2	43.7	36.1	20.1	7.6	4.7
6	1.55	100.0	96.0	59.3	50.9	24.5	8.5	3.8
7	1.31							
8	0.93							
9	0.25							
10	1.42	100.0	95.5	45.5	36.2	17.7	7.8	4.7
11	0.03							
12	0.29							
13	1.19							
14	0.57							
15	0.99							
16	0.51	**						
17	1.72	100.0	96.7	44.2	26.8	10.7	4.4	3.0
18	1.07	**						
19	2.08	100.0	97.0	47.0	34.9	14.6	4.7	3.6
20	--							
21	0.06							
22	0.62	**						
23	0.44							
24	0.82							
25	1.78	100.0	98.3	42.9	28.1	9.4	4.2	3.3

* No Sample Submitted
** Sample Too Small For Gradation

Gradation Test Results

Run No. B-3

Sample No.	Dust Content (mg/cu ft)	Percent Finer by Weight						
		500 μ	250 μ	74 μ	58 μ	36 μ	18 μ	14.5 μ
1	0.84							
2	2.19							
3	2.35							
4	2.00							
5	4.71	100.0	96.3	33.8	26.3	18.0	10.5	4.4
6	3.29	100.0	98.1	41.8	36.6	22.4	10.1	4.6
7	2.22							
8	1.84							
9	1.75							
10	2.59	98.8	96.4	57.9	50.4	32.0	19.5	7.5
11	3.49							
12	1.80							
13	2.53							
14	1.28							
15	2.69							
16	1.40							
17	3.78	100.0	98.5	46.6	38.4	28.0	15.7	9.8
18	2.61							
19	4.76							
20	--							
21	1.65							
22	2.53	100.0	98.8	51.2	43.3	25.7	15.2	7.9
23	1.22							
24	3.78							
25	3.27	100.0	99.1	49.1	35.1	14.6	6.4	3.9

* No Sample Submitted
** Sample Too Small For Gradation

Gradation Test Results

Run No. B-4

Sample No.	Dust Content (mg/cu ft)	Percent Finer by Weight						
		500 μ	250 μ	74 μ	58 μ	36 μ	18 μ	14.5 μ
1	6.28							
2	10.4							
3	15.3							
4	19.7							
5	28.5	99.9	94.0	14.6	11.5	8.3	5.3	3.1
6	21.0	100.0	93.1	18.4	15.6	10.9	7.5	4.4
7	23.8							
8	12.8							
9	10.6							
10	10.8	100.0	99.8	23.6	21.3	15.4	11.1	7.1
11	15.4							
12	8.41							
13	5.23							
14	3.36							
15	3.63							
16	3.59							
17	5.07	99.8	96.5	35.9	33.4	27.0	21.0	14.3
18	4.09							
19	9.06							
20	.03							
21	12.6							
22	24.2	100.0	97.4	27.2	26.2	21.5	15.5	9.8
23	25.2							
24	26.4							
25	32.4	100.0	90.4	12.6	10.3	6.2	3.8	2.3

* No Sample Submitted
** Sample Too Small For Gradation

Gradation Test Results

Run No. B-5

Sample No.	Dust Content (mg/cu ft)	Percent Finer by Weight						
		500 μ	250 μ	74 μ	58 μ	36 μ	18 μ	14.5 μ
1	7.85							
2	12.9							
3	9.85							
4	8.17							
5	16.5	100.0	92.6	12.9	11.1	8.9	5.3	3.1
6	13.5	100.0	89.2	12.9	8.7	5.3	3.3	1.7
7	11.2							
8	7.86							
9	4.69							
10	3.84	100.0	77.9	7.7	4.6	1.7	1.0	0.7
11	6.40							
12	2.64							
13	3.41							
14	2.61							
15	2.72							
16	1.83							
17	3.06	100.0	85.8	18.9	15.1	7.2	3.7	1.9
18	1.15							
19	2.95							
20	--							
21	4.00							
22	3.15	100.0	87.9	32.7	27.8	19.5	11.8	6.0
23	3.83							
24	8.58							
25	9.73	100.0	83.4	8.1	4.3	1.8	1.3	0.7

* No Sample Submitted
** Sample Too Small For Gradation

Gradation Test Results

Run No. B-6

Sample No.	Dust Content (mg/cu ft)	Percent Finer by Weight						
		500 μ	250 μ	74 μ	58 μ	36 μ	18 μ	14.5 μ
1	12.2							
2	21.8							
3	21.5							
4	18.9							
5	40.6	100.0	94.6	10.3	8.0	5.0	2.7	1.6
6	33.9	100.0	90.0	11.6	9.9	7.3	4.9	3.0
7	35.9							
8	22.9							
9	20.4							
10	16.3	99.9	85.4	9.6	7.9	4.8	2.6	1.5
11	26.7							
12	8.26							
13	4.74							
14	2.13							
15	4.44							
16	4.17							
17	6.14	100.0	90.0	26.6	24.0	14.2	6.3	2.6
18	3.08							
19	8.90							
20	--							
21	10.1							
22	12.4	100.0	90.3	30.8	27.6	20.7	13.3	7.4
23	6.22							
24	29.4							
25	33.0	100.0	86.2	8.9	5.2	5.2	3.5	2.1

* No Sample Submitted
** Sample Too Small For Gradation

Gradation Test Results

Run No. B-7

Sample No.	Dust Content (mg/cu ft)	Percent Finer by Weight						
		500 μ	250 μ	74 μ	58 μ	36 μ	18 μ	14.5 μ
1	20.5							
2	27.3							
3	23.7							
4	23.5							
5	36.8	100.0	94.9	14.6	11.8	8.0	4.9	2.7
6	31.6	100.0	93.2	17.8	15.0	10.7	7.1	4.3
7	38.7							
8	19.1							
9	13.5							
10	11.5	100.0	89.3	16.4	15.1	11.0	6.8	4.0
11	18.6							
12	6.61							
13	4.29							
14	3.62							
15	4.22							
16	4.14							
17	6.97	100.0	91.6	35.2	33.4	29.0	21.3	12.6
18	3.70							
19	7.34							
20	0.95							
21	7.94							
22	11.8	100.0	93.7	42.2	37.3	29.7	19.8	11.2
23	16.9							
24	26.5							
25	27.5	100.0	91.3	14.7	12.7	8.5	5.0	3.1

* No Sample Submitted
** Sample Too Small For Gradation

Gradation Test Results

Run No. B-8

Sample No.	Dust Content (mg/cu ft)	Percent Finer by Weight						
		500 μ	250 μ	74 μ	58 μ	36 μ	18 μ	14.5 μ
1	2.33							
2	5.57							
3	7.50							
4	8.69							
5	12.2	100.0	97.9	47.8	44.1	36.0	24.2	15.2
6	12.3	100.0	99.6	59.8	57.5	45.4	41.3	22.8
7	10.6							
8	7.03							
9	3.89							
10	5.55	100.0	97.9	66.4	63.7	51.9	35.9	25.9
11	8.52							
12	5.78							
13	5.43							
14	5.06							
15	11.2							
16	8.25							
17	14.2	100.0	97.8	55.6	52.2	40.1	28.0	17.6
18	7.69							
19	14.3							
20	--							
21	1.96							
22	4.03	100.0	95.7	51.1	44.1	23.3	7.8	4.0
23	4.56							
24	9.35							
25	4.82	100.0	99.4	50.4	41.5	24.2	11.0	5.8

* No Sample Submitted
** Sample Too Small For Gradation

Gradation Test Results

Run No. B-9

Sample No.	Dust Content (mg/cu ft)	Percent finer by Weight						
		500 μ	250 μ	74 μ	53 μ	36 μ	18 μ	14.5 μ
1	.26							
2	1.11							
3	.65							
4	1.05							
5	2.64	100.0	91.3	35.3	32.4	28.7	15.5	8.5
6	1.62	100.0	96.1	62.8	58.7	45.7	23.7	15.3
7	.31							
8	1.10							
9	.19							
10	1.19	97.5	92.4	56.6	51.1	34.1	18.6	10.2
11	1.13							
12	.84							
13	4.80							
14	1.14							
15	3.71							
16	1.05							
17	2.94	100.0	89.5	48.2	44.2	33.6	20.2	12.1
18	.74							
19	2.83							
20	.03							
21	.51							
22	4.97	100.0	100.0	87.3	86.0	73.8	50.7	29.2
23	1.39							
24	3.10							
25	1.55	100.0	96.0	40.0	31.2	19.8	11.3	6.6

* No Sample Submitted
** Sample Too Small For Gradation

Gradation Test Results

Run No. B-10

Sample No.	Dust Content (mg/cu ft)	Percent Finer by Weight						
		590 μ	250 μ	74 μ	58 μ	36 μ	18 μ	14.5 μ
1	.17	**						
2	.60	**						
3	1.37	100.0	97.6	70.8	59.5	39.9	21.0	10.4
4	.23	**						
5	2.03	100.0	95.6	20.6	15.[illegible]	8.0	3.8	2.3
6	1.49	100.0	95.7	36.1	33.9	27.5	18.1	10.0
7	.50	**						
8	.80	**						
9	.29	**						
10	.52	**						
11	.61	**						
12	.55	**						
13	.85	**						
14	.77	**						
15	.75	**						
16	.54	**						
17	.80	**						
18	.19	**						
19	.80	**						
20	.06	**						
21	.31	**						
22	.34	**						
23	.25	**						
24	.85	**						
25	.48	**						

* No Sample Submitted
** Sample Too Small For Gradation

Gradation Test Results

Run No. B-11

Sample No.	Dust Content (mg/cu ft)	Percent Finer by Weight						
		500 μ	250 μ	74 μ	52 μ	36 μ	18 μ	14.5 μ
1	.17							
2	1.16							
3	.92							
4	.35							
5	4.65	100.0	94.4	18.9	14.1	8.2	3.5	2.1
6	3.32	99.1	91.6	28.0	23.5	13.2	6.2	2.9
7	.10							
8	1.84							
9	.80							
10	1.80	100.0	95.2	29.1	24.3	10.0	4.3	2.8
11	1.77							
12	.52							
13	.71							
14	.34							
15	.99							
16	.56							
17	1.33	100.0	82.6	30.4	23.9	14.8	5.7	3.0
18	.25							
19	1.13							
20	.03							
21	.03							
22	1.45	100.0	98.0	73.5	67.1	50.6	26.5	11.7
23	.80							
24	4.63							
25	3.39	100.0	93.7	16.0	10.0	4.7	2.3	1.5

* No Sample Submitted

** Sample Too Small For Gradation

Gradation Test Results

Run No. B-12

Sample No.	Dust Content (mg/cu ft)	Percent Finer by Weight						
		500 μ	250 μ	74 μ	58 μ	36 μ	18 μ	14.5 μ
1	.35							
2	1.05							
3	1.52							
4	2.27							
5	2.59	100.0	98.9	52.4	46.0	33.9	20.3	11.1
6	3.60	100.0	99.2	42.7	38.8	29.1	18.5	10.0
7	2.81							
8	3.02							
9	2.17							
10	2.82	100.0	99.0	55.4	47.8	34.3	20.2	12.0
11	3.20							
12	1.28							
13	1.56							
14	1.08							
15	1.83							
16	1.32							
17	2.56	100.0	98.9	57.4	52.6	39.3	23.0	11.5
18	1.40							
19	2.68							
20	.27							
21	1.45							
22	4.97	100.0	99.5	83.3	79.8	68.5	43.3	27.9
23	2.64							
24	4.91							
25	2.77	100.0	99.0	38.6	33.4	26.8	15.8	12.1

* No Sample Submitted
** Sample Too Small For Gradation

Gradation Test Results

Run No. B-13

Sample No.	Dust Content (mg/cu ft)	Percent Finer by Weight						
		500 µ	250 µ	74 µ	58 µ	36 µ	18 µ	14.5 µ
1	1.32							
2	2.12							
3	2.60							
4	3.52							
5	5.4	100.0	99.2	41.3	36.6	29.8	15.1	11.3
6	6.1	100.0	99.0	50.9	45.6	37.5	22.7	13.3
7	5.70							
8	4.23							
9	2.79							
10	3.05	100.0	99.1	59.9	58.3	45.9	29.5	17.9
11	3.31							
12	2.09							
13	2.31							
14	1.45							
15	1.65							
16	2.65							
17	4.25	100.0	97.7	59.3	54.9	43.4	31.8	20.5
18	2.46							
19	4.07							
20	.15							
21	1.98							
22	7.38	100.0	99.9	72.4	68.4	57.1	37.6	24.3
23	4.57							
24	5.30							
25	3.42	100.0	97.8	35.7	28.1	19.5	11.1	7.7

* No Sample Submitted
** Sample Too Small For Gradation

Gradation Test Results

Run No. B-14

Sample No.	Dust Content (mg/cu ft)	Percent Finer by Weight						
		500 μ	250 μ	74 μ	58 μ	36 μ	18 μ	14.5 μ
1	1.19							
2	1.68							
3	1.70							
4	2.18							
5	2.85	100.0	98.0	17.8	11.4	7.5	4.7	3.3
6	2.50	100.0	97.6	22.0	15.8	9.1	4.6	3.3
7	3.59							
8	2.97							
9	2.97							
10	1.45	100.0	96.0	18.5	14.0	9.5	5.7	3.9
11	1.40							
12	0.73							
13	1.28							
14	.82							
15	1.08							
16	.72							
17	1.69	100.0	96.7	32.3	25.4	17.0	9.0	6.2
18	.96							
19	1.78							
20	.09							
21	0.31							
22	.31	**						
23	1.64	100.0	96.5	28.1	25.2	22.9	11.8	7.8
24	2.47							
25	1.84	100.0	96.8	14.9	12.7	11.5	5.9	4.6

* No Sample Submitted
** Sample Too Small For Gradation

Gradation Test Results

Run No. B-16

Sample No.	Dust Content (mg/cu ft)	Percent Finer by Weight						
		500 µ	250 µ	74 µ	58 µ	36 µ	18 µ	14.5 µ
1	1.67							
2	3.21							
3	5.06							
4	6.69							
5	12.9	100.0	97.3	21.0	18.8	15.3	8.2	5.8
6	8.08	100.0	97.0	29.7	28.3	23.3	17.9	8.5
7	7.12							
8	5.71							
9	3.53							
10	3.29	100.0	96.2	32.9	30.9	27.2	16.6	10.4
11	4.42							
12	3.23							
13	2.22							
14	1.14							
15	2.26							
16	1.56							
17	2.80	100.0	96.0	18.0	14.3	10.8	6.4	3.3
18	3.05							
19	7.77							
20	--							
21	8.52							
22	22.7	100.0	98.8	34.3	33.3	31.6	19.1	10.2
23	16.0							
24	15.6							
25	3.21	100.0	93.5	10.4	7.7	7.1	4.0	2.5

* No Sample Submitted
** Sample Too Small For Gradation

Gradation Test Results

Run No. B-17

Sample No.	Dust Content (mg/cu ft)	Percent Finer by Weight						
		500 μ	250 μ	74 μ	58 μ	36 μ	18 μ	14.5 μ
1	3.04							
2	4.98							
3	7.15							
4	9.6							
5	15.8	100.0	97.2	24.5	21.2	14.9	8.5	5.6
6	10.5	100.0	96.8	35.6	32.1	27.2	15.4	10.0
7	10.8							
8	7.4							
9	5.55							
10	7.0	99.8	92.3	33.3	31.3	29.5	16.9	12.9
11	7.6							
12	4.07							
13	4.09							
14	2.81							
15	3.47							
16	3.91							
17	6.55	100.0	95.8	44.8	43.6	39.8	24.1	18.2
18	4.6							
19	9.5							
20	.27							
21	5.55							
22	12.7	100.0	97.1	45.9	44.3	39.0	25.6	16.8
23	9.4							
24	11.8							
25	6.85	100.0	92.2	15.3	12.5	10.7	6.3	4.5

* No Sample Submitted
** Sample Too Small For Gradation

Gradation Test Results

Run No. B-18

Sample No.	Dust Content (mg/cu ft)	Percent Finer by Weight						
		500 µ	250 µ	74 µ	58 µ	36 µ	18 µ	14.5 µ
1	6.08							
2	7.30							
3	6.82							
4	6.69							
5	15.4	100.0	96.6	31.3	29.7	26.3	13.8	9.0
6	14.4	100.0	96.8	39.2	36.5	28.3	14.8	9.7
7	12.4							
8	8.30							
9	5.61							
10	7.82	99.3	94.8	42.6	40.9	37.4	20.1	13.2
11	6.45							
12	3.90							
13	2.36							
14	2.41							
15	6.67							
16	4.76							
17	6.86	99.6	95.9	53.2	50.3	46.1	30.7	19.0
18	3.79							
19	6.84							
20	0.30							
21	9.32							
22	7.16	100.0	97.3	51.5	48.0	42.1	26.2	18.3
23	13.6							
24	17.5							
25	8.93	100.0	95.3	20.9	18.0	12.0	6.9	4.8

* No Sample Submitted
** Sample Too Small For Gradation

Gradation Test Results

Run No. B-19

Sample No.	Dust Content (mg/cu ft)	Percent Finer by Weight						
		500 μ	250 μ	74 μ	58 μ	36 μ	18 μ	14.5 μ
1	4.16							
2	7.47							
3	8.98							
4	13.4							
5	26.0	100.0	98.9	37.0	33.4	24.2	12.5	8.2
6	22.9	100.0	98.7	46.7	42.7	33.7	19.2	12.5
7	19.6							
8	13.4							
9	9.56							
10	12.2	100.0	97.1	51.3	46.4	35.2	17.9	12.2
11	12.0							
12	8.05							
13	4.86							
14	5.71							
15	7.50							
16	6.10							
17	11.4	100.0	97.1	56.4	52.6	47.2	31.4	21.7
18	7.39							
19	12.5							
20	0.12							
21	9.26							
22	11.9	100.0	97.4	63.7	58.5	47.3	21.5	16.3
23	21.7							
24	29.6							
25	6.84	100.0	95.6	22.8	19.7	18.6	11.2	7.2

* No Sample Submitted
** Sample Too Small For Gradation

Gradation Test Results

Run No. B-20

Sample No.	Dust Content (mg/cu ft)	Percent Finer by Weight						
		500 µ	350 µ	74 µ	58 µ	36 µ	18 µ	14.5 µ
1	1.42							
2	2.81							
3	2.47							
4	2.32							
5	6.92	100.0	94.8	20.7	17.2	10.8	4.9	3.0
6	6.40	100.0	92.8	21.5	16.4	8.9	3.6	2.8
7	4.22							
8	3.98							
9	1.94							
10	4.33	100.0	92.4	36.5	32.3	23.9	10.4	6.9
11	5.46							
12	2.00							
13	2.02							
14	1.93							
15	2.18							
16	1.59							
17	2.75	100.0	90.5	36.8	28.9	14.1	7.2	5.3
18	1.04							
19	2.38							
20	4.11							
21	2.53							
22	3.41	100.0	100.0	61.9	52.3	35.0	14.5	7.6
23	3.36							
24	8.21							
25	6.70	100.0	90.6	24.2	15.0	11.7	7.0	5.3

* No Sample Submitted
** Sample Too Small For Gradation

Gradation Test Results

Run No. B-21

Sample No.	Dust Content (mg/cu ft)	Percent Finer by Weight						
		500 μ	250 μ	74 μ	58 μ	36 μ	18 μ	14.5 μ
1	3.20							
2	5.74							
3	6.96							
4	7.18							
5	18.0	100.0	96.4	19.5	15.0	6.2	3.5	2.0
6	14.4	100.0	97.2	29.9	24.2	16.9	10.3	6.2
7	12.3							
8	6.65							
9	3.11							
10	5.52	98.9	94.6	47.0	43.7	33.2	24.0	13.8
11	7.30							
12	4.71							
13	9.74							
14	4.40							
15	9.70							
16	5.30							
17	10.3	100.0	91.8	21.8	18.8	13.7	7.1	4.4
18	4.45							
19	10.5							
20	11.0							
21	6.53							
22	6.28	100.0	98.6	42.1	37.0	22.4	10.9	4.7
23	7.83							
24	12.2							
25	2.98	100.0	90.8	19.4	10.4	6.8	4.0	2.7

* No Sample Submitted
** Sample Too Small For Gradation

Gradation Test Results

Run No. B-22

Sample No.	Dust Content (mg/cu ft)	Percent Finer by Weight						
		500 μ	250 μ	74 μ	58 μ	36 μ	18 μ	14.5 μ
1	16.3							
2	4.55							
3	5.83							
4	6.28							
5	18.1	100.0	95.5	21.8	15.9	8.1	4.6	2.3
6	15.6	99.8	96.6	31.5	22.6	14.3	8.3	6.3
7	13.8							
8	6.04							
9	24.2							
10	4.30	100.0	93.1	41.7	39.2	30.9	23.4	16.1
11	7.38							
12	4.45							
13	14.9							
14	5.94							
15	10.0							
16	6.26	100.0	93.1	22.8	18.3	15.5	11.7	6.9
17	11.4							
18	5.58							
19	12.8							
20	7.44							
21	7.30							
22	7.76	100.0	97.4	28.9	22.1	10.1	4.8	2.9
23	4.28							
24	10.8							
25	2.62	100.0	88.4	5.8	2.9	1.0	0.5	0.4

* No Sample Submitted
** Sample Too Small For Gradation

Gradation Test Results

Run No. E-22a

Sample No.	Dust Content (mg/cu ft)	Percent Finer by Weight						
		500 μ	250 μ	74 μ	53 μ	36 μ	18 μ	14.5 μ
1	2.53							
2	3.35							
3	4.46							
4	9.62							
5	9.24	100.0	90.5	14.2	7.8	4.0	2.2	1.2
6	7.07	100.0	87.0	21.8	15.7	9.8	5.1	3.0
7	8.75							
8	4.62							
9	4.31							
10	4.56	100.0	82.7	18.6	13.4	8.7	6.3	2.9
11	5.81							
12	2.94							
13	5.43							
14	3.75							
15	3.74							
16	3.01							
17	4.42	100.0	93.5	46.1	38.9	34.9	24.6	15.7
18	1.98							
19	5.30							
20	2.89							
21	9.59							
22	5.88	100.0	94.1	25.5	16.7	9.0	5.6	3.9
23	10.31							
24	11.42							
25	2.83	100.0	91.5	7.5	3.4	2.6	2.2	1.5

* No Sample Submitted

** Sample Too Small for Gradation

Gradation Test Results

Run No. B-[illegible]

Sample No.	Dust Content (mg/cu ft)	Percent Finer by Weight						
		500 μ	250 μ	74 μ	58 μ	36 μ	18 μ	14.5 μ
1	1.78							
2	2.09							
3	2.7[illegible]							
4	4.23							
5	2.62	100.0	96.1	21.9	16.8	11.9	5.8	4.5
6	4.10	99.6	85.6	19.6	16.5	12.5	7.3	4.8
7	4.78							
8	3.45							
9	3.26							
10	3.23	99.5	85.6	24.0	21.7	17.9	10.0	6.4
11	5.33							
12	2.86							
13	0.98							
14	0.88							
15	1.60							
16	1.13							
17	1.18	100.0	96.4	45.8	41.8	37.0	18.4	14.2
18	0.81							
19	2.54							
20	1.20							
21	5.08							
22	4.69	100.0	96.3	40.3	36.2	25.0	13.3	8.4
23	6.94							
24	2.80							
25	2.30	100.0	94.8	26.0	18.1	13.2	7.6	5.4

* No Sample Submitted
** Sample Too Small For Gradation

Gradation Test Results

Run No. B-24

Sample No.	Dust Content (mg/cu ft)	Percent Finer by Weight						
		500 μ	250 μ	74 μ	58 μ	36 μ	18 μ	14.5 μ
1	1.69							
2	4.26							
3	6.10							
4	7.27							
5	10.5	100.0	95.8	41.6	36.6	30.5	16.4	11.6
6	11.3	100.0	93.7	45.2	42.4	35.9	20.4	14.5
7	7.41							
8	7.64							
9	6.06							
10	8.40	100.0	93.0	42.8	40.7	35.7	25.2	17.8
11	6.45							
12	4.62							
13	5.94							
14	1.45							
15	2.90							
16	3.74							
17	3.53	100.0	96.8	46.0	41.1	32.6	18.0	12.4
18	4.40							
19	6.88							
20	4.73							
21	5.51							
22	7.87	100.0	96.4	53.9	51.0	40.9	22.3	14.2
23	14.2							
24	16.6	100.0	95.9	46.0	43.1	34.9	23.3	14.8
25	0.39							

* No Sample Submitted
** Sample Too Small For Gradation

Gradation Test Results

Run No. B-25

Sample No.	Dust Content (mg/cu ft)	Percent Finer by Weight						
		500 μ	250 μ	74 μ	58 μ	36 μ	16 μ	14.5 μ
1	1.28							
2	2.84							
3	2.08							
4	2.44							
5	2.91	100.0	97.9	61.8	57.1	49.2	32.2	22.9
6	3.57	100.0	99.1	70.2	65.1	58.4	29.3	21.4
7	6.91							
8	3.60							
9	2.69							
10	3.46	100.0	98.2	78.0	72.9	66.9	46.6	33.1
11	2.50							
12	1.16							
13	0.62							
14	0.28							
15	0.78							
16	1.08							
17	3.36	100.0	98.3	88.1	86.7	79.6	57.8	40.7
18	0.80							
19	1.01							
20	0.60							
21	1.68							
22	1.45	100.0	98.0	71.5	64.9	50.0	26.7	17.6
23	2.53							
24	3.46							
25	1.58	100.0	84.9	9.4	6.3	5.9	3.5	2.6

* No Sample Submitted
** Sample Too Small for Gradation

Gradation Test Results

Run No. B-26

Sample No.	Dust Content (mg/cu ft)	Percent Finer by Weight						
		500 μ	250 μ	74 μ	58 μ	36 μ	18 μ	14.5 μ
1	2.64							
2	1.39							
3	2.41							
4	1.63							
5	3.52	100.0	94.1	50.9	46.3	40.7	26.1	20.0
6	3.48	100.0	94.7	58.4	55.5	45.8	25.5	16.9
7	4.41							
8	3.85							
9	1.39							
10	3.20	100.0	99.1	69.9	66.3	52.9	33.1	19.4
11	3.43							
12	2.00							
13	0.62							
14	0.11							
15	1.37							
16	1.56							
17	1.39	100.0	97.9	79.1	69.8	54.9	25.2	9.5
18	0.93	100.0	98.1	90.6	87.1	63.4	34.1	17.2
19	1.76							
20	1.13							
21	0.49							
22	0.57							
23	0.83							
24	3.10							
25	2.02	100.0	86.4	18.2	14.6	10.2	4.5	2.9

* No Sample Submitted
** Sample Too Small For Gradation

Gradation Test Results

Run No. B-30

Sample No.	Dust Content (mg/cu ft)	Percent Finer by Weight						
		500 μ	250 μ	7[illegible] μ	58 μ	36 μ	18 μ	14.5 μ
1	1.48							
2	1.44							
3	1.33							
4	1.71							
5	3.48	100.0	97.3	48.2	45.1	37.7	18.9	13.8
6	2.80	100.0	98.9	61.0	57.8	49.6	29.8	15.7
7	2.87							
8	4.42							
9	1.05							
10	2.26	100.0	98.7	42.7	36.7	27.5	13.0	9.2
11	2.09							
12	2.32							
13	1.13							
14	0.91							
15	3.09							
16	2.23							
17	4.16	100.0	97.9	45.1	38.0	29.2	15.0	7.7
18	1.73							
19	3.33	100.0	95.5	35.5	30.7	25.0	10.1	7.4
20	0.56							
21	0.53							
22	0.99							
23	0.22							
24	0.36							
25	1.54	100.0	96.2	34.7	26.2	20.4	10.7	7.6

* No Sample Submitted
** Sample Too Small For Gradation

Gradation Test Results

Run No. B-31

Sample No.	Dust Content (mg/cu ft)	Percent Finer by Weight						
		500 μ	250 μ	74 μ	58 μ	36 μ	18 μ	14.5 μ
1	0.69							
2	0.85							
3	1.10							
4	2.12							
5	1.48	100.0	93.6	51.0	47.4	39.2	18.4	12.6
6	2.46	98.7	94.8	57.1	53.8	45.2	24.3	14.2
7	1.62							
8	1.31							
9	1.02							
10	1.68	98.2	76.8	55.4	46.8	30.7	13.9	10.1
11	0.90							
12	0.29							
13	0.56							
14	0.36							
15	1.93	100.0	90.3	50.0	47.7	41.7	21.2	15.3
16	0.67							
17	1.16	97.4	82.0	41.0	36.0	26.8	13.1	11.2
18	0.27							
19	0.98							
20	0.59							
21	0.22							
22	0.99							
23	1.05							
24	1.70	100.0	98.3	49.1	45.4	36.2	16.7	10.2
25	0.41	**						

* No Sample Submitted
** Sample Too Small For Gradation

APPENDIX III
SUMMARY OF RESULTS - LARGE-SCALE TESTS

Gradation Test Results

Run No. 1-Y-1-12,000

Sample No.	Dust Content (mg/cu ft)	Percent Finer by Weight						
		500 µ	250 µ	74 µ	58 µ	36 µ	18 µ	14.5 µ
1	5.2							
2	11.6							
3	17.2							
4	5.5							
5	20.4	98.4	93.8	40.6	29.4	12.3	6.0	3.7
6	18.9	97.1	93.4	51.4	48.0	37.7	32.6	28.1
7	19.4							
8	16.2							
9	12.5							
10	19.8	99.9	97.2	51.1	40.3	13.4	7.8	4.7
11	16.5							
12	9.2							
13	12.5							
14	14.9							
15	10.5							
16	7.1							
17	18.1	100.0	97.2	48.8	41.2	18.9	11.3	4.8
18	9.4							
19	23.5							
20	2.0							
21	12.0							
22	17.5	100.0	99.8	68.4	55.1	22.9	11.6	4.8
23	25.8							
24	34.1	100.0	96.7	43.6	31.4	19.4	13.3	10.2
25	--	**						

* No Sample Submitted
** Sample Too Small For Gradation

Gradation Test Results

Run No. 1-Y-2-12,000

Sample No.	Dust Content (mg/cu ft)	Percent Finer by Weight						
		500 μ	250 μ	74 μ	58 μ	36 μ	18 μ	14.5 μ
1	0.8							
2	1.93							
3	2.77							
4	4.21							
5	3.55	100.0	90.9	33.0	22.8	7.7	6.5	4.3
6	3.72	100.0	95.0	57.5	51.3	16.2	11.4	5.9
7	2.66							
8	1.95							
9	2.25							
10	3.17	100.0	98.1	50.9	34.1	11.2	9.7	8.1
11	2.94							
12	1.77							
13	5.62							
14	3.02							
15	4.52							
16	1.93							
17	5.00	100.0	89.9	34.6	22.9	5.6	4.8	4.1
18	1.37							
19	3.27							
20	1.46							
21	0.9							
22	2.21	100.0	98.7	33.4	15.4	5.5	4.0	2.9
23	1.19							
24	4.69							
25	4.17	100.0	99.3	52.2	37.7	16.3	9.6	6.9

* No Sample Submitted
** Sample Too Small For Gradation

Gradation Test Results

Run No. 1-Y-3-12,000

Sample No.	Dust Content (mg/cu ft)	Percent Finer by Weight						
		500 µ	250 µ	74 µ	58 µ	36 µ	18 µ	14.5 µ
1	6.2							
2	12.2							
3	14.0							
4	24.2							
5	18.6	100.0	99.4	52.2	43.2	26.3	18.0	11.2
6	14.9	100.0	99.8	60.1	49.4	25.7	14.8	9.7
7	16.9							
8	10.5							
9	6.7							
10	14.2	100.0	99.8	53.8	48.5	27.4	16.6	11.9
11	14.7							
12	7.3							
13	10.5							
14	5.7							
15	14.5							
16	15.4							
17	29.4	100.0	99.9	40.1	36.3	17.6	10.3	6.4
18	14.7							
19	31.0							
20	14.4							
21	5.1							
22	1.7	100.0	98.2	26.3	20.3	8.7	5.7	5.2
23	7.8							
24	15.9							
25	13.4	100.0	99.8	47.8	37.0	16.7	9.6	6.2

* No Sample Submitted

** Sample Too Small For Gradation

Gradation Test Results

Run No. 1-Y-(-12,000

Sample No.	Dust Content (mg/cu ft)	Percent Finer by Weight						
		500 μ	250 μ	74 μ	38 μ	36 μ	18 μ	14.5 μ
1	0.3							
2	1.7							
3	1.8							
4	3.2							
5	3.9	100.0	99.2	40.7	22.3	12.5	5.4	3.7
6	2.5	100.0	98.7	51.3	42.8	16.4	6.4	3.7
7	2.2							
8	2.2							
9	1.1							
10	3.9	100.0	99.2	59.9	42.6	18.8	8.1	5.2
11	3.2							
12	1.7							
13	4.0							
14	2.5							
15	3.8							
16	1.3							
17	4.2	99.3	97.9	46.8	38.8	19.7	7.4	4.7
18	2.4							
19	2.8							
20	2.1							
21	2.6	100.0	98.8	84.0	68.6	43.9	24.4	17.9
22	0.4	**						
23	1.1							
24	3.5							
25	3.6	100.0	99.3	51.2	28.2	9.7	6.5	4.6

* No Sample Submitted
** Sample Too Small For Gradation

Gradation Test Results

Run No. 1-Y-4A-12,000

Sample No.	Dust Content (mg/cu ft)	Percent Finer by Weight						
		500 µ	250 µ	74 µ	58 µ	36 µ	18 µ	14.5 µ
1	8.5							
2	10.2							
3	6.3							
4	9.4							
5	8.2	100.0	99.6	57.0	49.9	29.0	12.8	8.3
6	5.4	99.4	98.8	79.3	66.8	39.9	12.8	8.3
7	5.0							
8	3.7							
9	3.4							
10	6.0	100.0	99.5	73.0	61.0	31.2	16.0	9.9
11	2.3							
12	1.7							
13	3.2							
14	0.9							
15	6.8							
16	5.2							
17	5.5	100.0	99.4	86.4	71.5	38.3	15.5	9.3
18	2.2							
19	5.9							
20	2.[illegible]							
21	2.3	100.0	98.6	82.2	72.7	42.6	25.7	14.5
22	1.1	**						
23	3.0							
24	7.0							
[illegible]	[illegible].3	100.0	98.6	60.8	44.9	11.7	7.7	6.0

* No S[illegible] Submitted

** Sample Too Small For Gradation

Gradation Test Results

Run No. I-Y-5-12,000

Sample No.	Dust Content (mg/cu ft)	Percent Finer by Weight						
		500 µ	250 µ	74 µ	58 µ	36 µ	18 µ	14.5 µ
1	7.2							
2	20.2							
3	14.6							
4	19.8							
5	13.1	99.8	99.6	70.9	57.5	25.9	14.6	9.9
6	18.3	100.0	99.8	85.3	75.1	53.7	29.9	18.2
7	26.5							
8	21.7							
9	26.0							
10	20.4	99.9	99.8	76.9	67.9	41.3	19.7	12.5
11	13.7							
12	8.2							
13	7.1							
14	3.5							
15	7.7							
16	10.8							
17	17.4	100.0	99.8	86.4	69.5	49.4	26.5	17.1
18	11.8							
19	19.3							
20	9.5							
21	11.1							
22	4.9	100.0	99.4	63.5	52.5	28.1	13.9	9.0
23	36.7							
24	46.0							
25	21.6	100.0	99.7	70.0	56.1	29.8	13.8	8.8

* No Sample Submitted
** Sample Too Small For Gradation

Gradation Test Results

Run No. 1-Y-6-12,000

Sample No.	Dust Content (mg/cu ft)	Percent Finer by Weight						
		500 μ	250 μ	74 μ	58 μ	36 μ	18 μ	14.5 μ
1	4.5							
2	5.4							
3	4.3							
4	7.0							
5	9.3	100.0	96.2	51.3	37.5	21.0	9.5	6.0
6	7.6	100.0	99.2	53.7	45.1	23.4	10.5	5.0
7	4.7							
8	4.9							
9	5.3							
10	10.2	100.0	99.7	61.7	52.2	28.0	11.1	7.2
11	7.6							
12	4.1							
13	4.8							
14	2.6							
15	7.0							
16	1.8							
17	4.7	100.0	98.8	50.0	41.7	25.2	13.6	8.2
18	1.9							
19	6.3							
20	3.8							
21	4.0	99.3	95.7	45.3	36.5	21.9	10.7	6.1
22	1.1	**						
23	1.6							
24	13.1							
25	7.3	100.0	99.6	45.2	29.8	17.5	9.7	6.1

* No Sample Submitted
** Sample Too Small For Gradation

Gradation Test Results

Run No. 1-Y-7-12,000

Sample No.	Dust Content (mg/cu ft)	Percent Finer by Weight						
		500 μ	250 μ	74 μ	58 μ	36 μ	18 μ	14.5 μ
1	3.5							
2	3.7							
3	4.6							
4	8.0							
5	10.4	99.7	97.1	54.4	43.1	35.5	20.2	14.1
6	8.6	99.6	97.8	47.4	42.1	2[illegible].0	16.1	10.2
7	7.4							
8	4.4							
9	5.0							
10	8.4	100.0	99.6	57.0	47.3	25.6	13.0	8.1
11	4.6							
12	3.3							
13	4.3							
14	2.8							
15	6.5							
16	4.5							
17	6.4	100.0	99.6	66.9	53.6	26.2	13.0	8.7
18	2.9							
19	5.1							
20	3.2							
21	1.4	100.0	97.8	46.7	37.2	14.9	6.0	4.1
22	0.8	**						
23	0.4							
24	7.1							
25	4.2	100.0	99.3	29.7	20.0	7.2	3.9	3.2

* No Sample Submitted
** Sample Too Small For Gradation

Gradation Test Results

Run No. 1-Y-8-12,000

Sample No.	Dust Content (mg/cu ft)	Percent Finer by Weight						
		500 μ	250 μ	74 μ	58 μ	36 μ	18 μ	14.5 μ
1	0.6							
2	3.6							
3	4.9							
4	16.7							
5	16.0	99.8	97.6	51.5	42.9	24.5	12.5	9.1
6	12.2	100.0	99.0	64.8	54.2	42.8	25.7	18.3
7	16.5							
8	9.3							
9	8.4							
10	12.1	99.8	97.9	60.9	52.0	34.2	17.2	15.3
11	10.6							
12	6.0							
13	8.0							
14	4.7							
15	6.6							
16	7.1							
17	14.5	100.0	98.1	57.6	46.7	34.5	20.9	15.3
18	8.2							
19	16.7							
20	8.4							
21	8.1	100.0	99.3	69.3	62.1	46.1	25.0	21.3
22	1.2	**						
23	0.03							
24	18.6							
25	4.7	99.3	98.0	38.4	25.2	10.8	6.5	3.5

* No Sample Submitted
** Sample Too Small For Gradation

Gradation Test Results

Run No. 1-Y-9-12,000

Sample No.	Dust Content (mg/cu ft)	Percent Finer by Weight						
		500 μ	250 μ	74 μ	58 μ	36 μ	18 μ	14.5 μ
1	3.7							
2	5.9							
3	3.7							
4	6.5							
5	11.0	100.0	97.0	65.3	60.0	43.9	32.6	8.9
6	8.6	100.0	98.9	79.5	70.0	54.1	25.6	21.2
7	7.4							
8	8.6							
9	7.4							
10	9.9	100.0	99.7	83.6	71.1	45.1	29.8	21.4
11	9.4							
12	5.3							
13	5.4							
14	2.6							
15	9.9							
16	6.6							
17	8.7	100.0	97.4	73.6	65.4	41.1	25.5	15.2
18	2.8							
19	4.4							
20	4.3							
21	5.8							
22	1.7	100.0	98.2	54.3	40.1	23.6	10.6	8.7
23	1.9							
24	22.0							
25	9.3	100.0	98.4	42.7	32.9	17.0	8.8	6.9

* No Sample Submitted

** Sample Too Small For Gradation

Gradation Test Results

Run No. I-Y-10-12,000

Sample No.	Dust Content (mg/cu ft)	Percent Finer by Weight						
		500 µ	250 µ	74 µ	58 µ	36 µ	18 µ	14.5 µ
1	1.9							
2	2.5							
3	2.0							
4	2.1							
5	3.7	99.2	97.5	71.4	60.8	48.2	24.6	15.6
6	3.3	99.1	97.2	80.2	75.8	54.9	32.6	21.2
7	4.8							
8	3.6							
9	3.3							
10	3.9	99.2	98.4	85.8	75.5	45.9	26.9	17.7
11	3.7							
12	2.8							
13	3.3							
14	2.8							
15	4.8							
16	2.6							
17	5.2	100.0	99.4	78.3	69.4	49.7	21.3	13.8
18	1.8							
19	2.3							
20	1.4							
21	4.3							
22	1.7	100.0	96.4	58.2	51.9	31.8	13.7	9.0
23	0.4							
24	9.2							
25	3.0	98.9	97.8	57.8	42.5	21.9	12.1	8.0

* No Sample Submitted

** Sample Too Small For Gradation

UNCLASSIFIED
Security Classification

DOCUMENT CONTROL DATA - R & D

(Security classification of title, body of abstract and indexing annotation must be entered when the overall report is classified)

1. ORIGINATING ACTIVITY (Corporate author) MSA Research Corporation Evans City, Pennsylvania	2a. REPORT SECURITY CLASSIFICATION Unclassified 2b. GROUP

3. REPORT TITLE

Evaluatic of the Dust Cloud Generated by Helicopter Rotor Downwash

4. DESCRIPTIVE NOTES (Type of report and inclusive dates)
Final Report

5. AUTHOR(S) (First name, middle initial, last name)

Sheridan J. Rodgers

6. REPORT DATE March 1968	7a. TOTAL NO. OF PAGES 135	7b. NO. OF REFS 6
8a. CONTRACT OR GRANT NO. DA 44-177-AMC-289(T) b. PROJECT NO. 1V021701A047 c. d.	9a. ORIGINATOR'S REPORT NUMBER(S) USAAVLABS Technical Report 67-81 9b. OTHER REPORT NO(S) (Any other numbers that may be assigned this report)	

10. DISTRIBUTION STATEMENT

This document has been approved for public release and sale; its distribution is unlimited.

11. SUPPLEMENTARY NOTES	12. SPONSORING MILITARY ACTIVITY U.S. Army Aviation Materiel Laboratories, Fort Eustis, Virginia

13. ABSTRACT

The dust cloud generated by a tandem-rotor H-21 helicopter was studied as a function of type of soil, hover height and disc loading. A total of 98 tests were made, and three different test sites were used. Samples were collected at 25 locations on the helicopter. Analyses were made for dust content and particle size distribution.

Average dust concentrations at the area of highest dust density, i.e., at rotor blade overlap, were:

Hover Height (ft)	Sampling Site (mg/cu ft) Phillips DZ, Yuma	Vehicle Dust Course, Yuma	Lee DZ Ft. Benning
1	12.4	15.5	18.4
10	18.5	18.1	17.6
75	5.3	13.6	3.0

The highest concentrations were measured at the site of rotor blade overlap, and the lowest concentrations were found beneath the rotor hubs.

The maximum particle size decreased with increasing elevation. No particles over 500 μ were found at any elevation.

Dust concentrations of 40 mg/cu ft were measured during takeoff and approach maneuvers. With another helicopter hovering in the immediate area, concentrations of 64 mg/cu ft were measured.

DD FORM 1 NOV 65 1473 REPLACES DD FORM 1473, 1 JAN 64, WHICH IS OBSOLETE FOR ARMY USE.

UNCLASSIFIED
Security Classification

UNCLASSIFIED

Security Classification

14. KEY WORDS	LINK A ROLE	LINK A WT	LINK B ROLE	LINK B WT	LINK C ROLE	LINK C WT
Dust concentration						
Helicopter						
Downwash						
Recirculation						
Particle size						
Air sampling						
Effects of hover height						
Visibility						
Simulated engine inlet						

UNCLASSIFIED

Security Classification