AD 630913

TECHNICAL REPORT
66-6-CM

STUDY OF DYNAMIC BIREFRINGENCE AND STRAIN PRODUCED IN TRANSPARENT POLYMERS BY MECHANICAL IMPACT

by
Anthony F. Wilde, John J. Ricca,
and Francis deS. Lynch

CLEARINGHOUSE
FOR FEDERAL SCIENTIFIC AND
TECHNICAL INFORMATION

Hardcopy	Microfiche		
$ 2.00	0.50	29 pp	as

ARCHIVE COPY

Code 1

DDC

February 1966

UNITED STATES ARMY
NATICK LABORATORIES
NATICK, MASSACHUSETTS 01760

Clothing & Organic
Materials Division
C&OM-18

The findings in this report are not to be construed as an official Department of the Army position, unless so designated by other authorized documents.

Citation of trade names in this report does not constitute an official indorsement or approval of the use of such items.

DDC AVAILABILITY NOTICE

Distribution of this document is unlimited.

DISPOSITION INSTRUCTIONS

Destroy this report when no longer needed. Do not return it to the originator.

DISTRIBUTION OF THIS
DOCUMENT IS UNLIMITED

AD

TECHNICAL REPORT
66-6 CM

STUDY OF DYNAMIC BIREFRINGENCE AND STRAIN PRODUCED IN TRANSPARENT POLYMERS BY MECHANICAL IMPACT

by

Anthony F. Wilde, Ph.D.

John J. Ricca Francis deS Lynch

Personnel Armor Materials Research Section
Clothing and Organic Materials Division

February 1966

Project Reference:
1L013001A91A C&OM-18

U. S. Army Materiel Command
U. S. ARMY NATICK LABORATORIES
Natick, Massachusetts

FOREWORD

For continuing advances in the development of superior impact-resistant materials, such as lightweight armor, a more fundamental understanding of the dynamic properties and responses of materials is necessary. This requires sophisticated scientific investigation into the details of the molecular and microstructural composition of existing candidate materials and subsequent correlation with their dynamic behavior under rapid mechanical loading. Within the Materials Research Branch of the Clothing and Organic Materials Division of the U.S. Army Natick Laboratories, a program has been conducted under Task 04, "Mechanical Properties of Organic Materials", of Project IL013001A91A, "In-House Laboratory Initiated Research and Development". So far, the efforts of this task have been primarily concerned with the development of techniques for the observation and characterization of dynamic material behavior.

This report describes the work that has been accomplished to date and gives some results obtained with a standard material. It is planned to direct future efforts along the same lines, with emphasis on improved experimental precision and on the study of a series of related polymers.

The authors of this report wish to express appreciation to Dr. J. F. Oesterling and his Review Committee of the In-House Laboratory Research Program for the generous support given to this investigation.

G. R. THOMAS, Ph.D.
Associate Director
Clothing & Organic Materials Division

APPROVED:

DALE H. SIELING, Ph.D.
Scientific Director

W. W. VAUGHAN
Brigadier General, USA
Commanding

CONTENTS

	Page
Lists of figures and tables	v
Abstract	vi
PART I. INTRODUCTION	
1. Purpose and scope	1
2. Stress wave behavior	1
3. Use of birefringence	1
4. Types of studies using birefringence	2
a. Engineering	2
b. Chemical and structural	3
c. Approach being used in NLABS investigation	3
PART II. SPECIMENS, GENERAL METHODS AND INSTRUMENTATION	
1. Specimens	4
2. Missiles and air gun	4
3. Loading rate	4
4. Strain measurement technique	5
5. Birefringence measurement techniques	7
a. High-speed photography	7
b. Photocell detection	8
PART III. PHOTOGRAPHIC DETECTION OF SHAPE AND CHANGES IN STRESS PULSES	
1. Purpose of experiments	8
2. Method: photographic	8
3. Results with CR-39: approximately 1-dimensional propagation observed	9

CONTENTS (Continued)

	Page
4. Results with CR-39 and PVB: stress pulse crossing interface	9
a. Differences between material behavior	9
b. Use of these observations	11
PART IV. DYNAMIC STRAIN-FRINGE CONSTANTS OF CR-39 AND THEIR RATE DEPENDENCE	
1. Equation deriving strain-fringe constants from data	11
2. Advantages of using CR-39	11
3. Methods and calculations	11
Apparent strain rate, determining	11
Detecting fringes by photocell measurements	12
Corresponding strain magnitude, determining	12
Dynamic strain-fringe constant, calculating	12
Static strain-fringe constant, obtaining	12
Correcting dynamic strain gage measurements	14
Static and dynamic modulus: method of determining	14
Density and longitudinal wave velocity	14
4. Relation of strain-fringe constants to apparent strain rate	14
a. Table of strain rates and strain-fringe constants	14
b. No trend indicated	16
5. Comparison of dynamic strain-fringe data with static values	16
a. Data from NLABS and Clark investigations tabulated	16
b. Slight trend indicated	16
6. Discussion	16
References	18

List of Figures

Fig.

1. Missile Velocity Measurement Circuits and Typical Anvil Geometries.

2. Schematic Diagram of Apparatus for Loading, Strain Measurement, and Synchronization

3. Arrangement of Photographic and Optical Components

4. Oscilloscope Record of the Modified Light Pulse Intensity

5. CR-39 Specimen Impacted from the Left (missile is not shown)

6. CR-39 (left) and PVB (right) Composite Specimen Impacted from the Left (missile is not shown)

7. Typical Strain-gage and Photocell Records Obtained Simultaneously with the Oscilloscope

8. Typical Relationship between Fringe Order and Longitudinal Strain Magnitude for the Leading Edge of the Pulse

9. Dynamic Longitudinal Strain-Fringe Constant as a Function of Apparent Strain Rate for the Leading Edge of the Pulse

10. Longitudinal Strain-Fringe Constant Plotted against Logarithm of Apparent Strain Rate for the Leading Edge of the Pulse

List of Tables

I. Strain Rate and Dynamic Strain-Fringe Constant Values for CR-39 Strip Specimen

II. Comparison of Dynamic and Static Values of Strain-Fringe Constants and Moduli for CR-39: NLABS and Clark Investigations

ABSTRACT

To obtain basic information about the mechanical and optical response of polymers, the stress-wave propagation in transparent plastics is being studied at the U.S. Army Natick Laboratories by observation of the dynamic strain and birefringence produced by mechanical impact. Instrumentation and techniques have been developed to achieve the following: synchronization; projectile alignment; intense, monochromatic illumination; and approximate one-dimensional wave propagation in the impacted specimen. Observations were made of the comparative wave shapes and velocities in two dissimilar polymers (CR-39 and polyvinylbutyral). Changes in wave characteristics were noted during crossing of an interface between these materials.

In this initial study, the dynamic strain-fringe constant of CR-39 plastic was studied over a range of apparent strain rates between 2,300 and 30,600 percent strain per second by the simultaneous measurement of the strain and birefringence occurring during the nearly linear leading edge of the strain pulse. Over this dynamic range no distinct dependence on the strain rate could be discerned. However, comparison of the average dynamic strain-fringe constant with the corresponding static value indicated a slight rate dependence over this larger total range of apparent strain rates.

STUDY OF DYNAMIC BIREFRINGENCE AND STRAIN PRODUCED IN TRANSPARENT POLYMERS BY MECHANICAL IMPACT

PART I. INTRODUCTION

1. Purpose and Scope

Studies of dynamic mechanical and optical properties of transparent materials are being conducted in order to obtain a better understanding of the mechanisms involved in deformation, penetration, and fracture during ballistic impact. To understand these mechanisms in detail, dynamic behavior must be related to the molecular and structural make-up of the material. The phenomena exhibited by the material in response to impact can be used to determine certain of its dynamic properties and can provide the basis for correlating these with the material's molecular and microstructural features.

2. Stress wave behavior

This initial study has been concerned with the non-destructive low-speed impaction of transparent organic polymers. One of the phenomena chosen for investigation was stress-wave behavior. This choice was made for the following two reasons:

1) The stress wave is the first disturbance propagated into the material by impact occurring at sub-sonic velocities; hence it may govern to a certain extent the subsequent deformation and fracturing processes.

2) Stress-wave study can lead to the determination of dynamic modulus, attenuation (energy dissipation), and dynamic stress distribution at high loading rates in impacted materials.

3. Use of birefringence

Stress waves can be detected by devices sensitive to the mechanical strain produced and, with certain transparent specimens, by observation of the dynamic birefringence accompanying the disturbance. Birefringence can be used to observe stress-wave propagation, distribution, and transmission or reflection at interfaces, all of which would be of great interest in an engineering study of armor behavior during and after impact. In addition, birefringence data can provide information of a more basic nature because the birefringence results from orientation or deformation of molecular groups or structural entities that have different polarizabilities in different directions, i.e.,

they are optically anisotropic. Identification of these anisotropic groups and characterization of their response to mechanical deformation should ultimately lead to a better understanding of material behavior on a micro scale during mechanical impact.

4. Types of Studies Using Birefringence

a. Engineering

Brown and Selway (1) used an electromagnetic shaker to apply sinusoidal axial displacements to a low-modulus plastic material at strain rates up to 3400 percent strain per second.* They derived the stress, strain, and birefringence, the phase angles between them, and the stress-optic coefficients of the material. Dally, Riley, and Durelli (2) observed the behavior of low-modulus plastic materials undergoing impact by dynamic pendulums and dropped weights. They computed dynamic moduli, stress- and strain-optic coefficients, energy loss, and pulse degradation at strain rates up to 6400 percent strain per second. Clark and Sanford (3,4) impacted high-modulus plastics with pointed projectiles to produce strain rates generally less than 10,000 percent strain per second* and, from these experiments, calculated dynamic moduli and stress- and strain-optic coefficients. Flynn, Gilbert, and Roll (5,6) explosively loaded both low- and high-modulus plastics by detonation of electric primers, producing considerably higher strain rates.* A dual-beam polariscope enabled them to separate the principal stresses and to observe the distribution of dynamic stresses.

The above-mentioned investigators developed experimental techniques involving photoelasticity and high-speed photography. They used the birefringence, stress, and strain as tools to measure stress-wave propagation, attenuation, and distribution. The chemical and structural properties of the material were not considered in the interpretation of the results.

*Strain rates were not specified in these references; instead, for purposes of comparison, the authors of this paper have estimated the values from the data cited in these works.

b. Chemical and Structural

Andrews, Rudd, and Gurnee (7,8,9) investigated several glassy, amorphous polymers and obtained static moduli and stress-optic coefficients. They made correlations with the nature and location of the optically anisotropic groups in the polymer molecules and observed and discussed the effects of temperature and molecular pre-orientation upon these photoelastic properties. Stein et al (10) measured the dynamic birefringence of partially crystalline polymer films during extension and also during sinusoidal vibration at low frequencies. They attributed the birefringence largely to the transient orientation of anisotropic crystals in the film.

These last two groups of investigators attempted to explain the photoelastic mechanism in terms of the fundamental physical behavior of the molecular groups and structural entities comprising the material. They used relatively low rates of strain or performed the tests statically, thus the experimental conditions were far different from those which simulate ballistic impact.

c. Approach Being Used in the NLABS Investigation

It is reasonable to assume that a fundamental understanding of material behavior during high-rate loading or ballistic impact requires a combination of both of the approaches outlined above. The techniques of rapid loading and the accurate recording of transient phenomena should be applied to materials possessing known systematic variations in structure or composition. Comparison of high-rate mechanical behavior with specific material structural properties can then be started, with the aim of providing correlations between the two for subsequent analysis and interpretation.

The experimental objective involved in this study was the simultaneous measurement of the dynamic mechanical strain and birefringence experienced by transparent polymeric materials under various apparent rates of impact loading.

The work described in this report covers the development of certain experimental techniques and some preliminary results; it does not include any correlations between impact behavior and the structural features of the specimen material.

PART II. SPECIMENS, GENERAL METHODS AND INSTRUMENTATION

Specimen dimensions and loading and strain measurement techniques were the same for all experiments. Birefringence measurement techniques depended on the particular experiment, as indicated below.

1. Specimens

Two commercial polymers were chosen for study: CR-39 plastic and a plasticized polyvinylbutyral material. The transparent specimen strips were 1/4 inch thick, 1-1/2 inches wide, and approximately 18 inches long.

2. Missiles and air gun

The specimen strips were impacted symmetrically at one end by cylindrical steel missiles 1/2 inch in diameter and 1 inch long fired from an air gun in a velocity range of approximately 100 to 150 feet/sec. The air gun consisted of a steel pipe, 1/2 inch internal diameter and 20 inches long, connected to a solenoid valve leading to a helium gas cylinder. Before firing,' the gas cylinder reduction valve was opened to provide the desired pressure. The gun was fired by manual closure of an electrical circuit which opened the solenoid valve. A "break wire" circuit and a "make foil gap" circuit provided start and stop pulses to a 10-megacycle electronic counter (Systron-Donner, Model 1034) for the time-interval measurements used to calculate the missile velocities.

3. Loading rate

The loading rate was determined by various-shaped lead and steel anvils cemented to the end of the specimen that was to undergo impact. The anvils modified the shape of the pulse propagated into the specimen and prevented fracture of the specimen at the impacted edge. The two circuits and typical anvil geometries and their location on the specimen are shown in Figure 1.

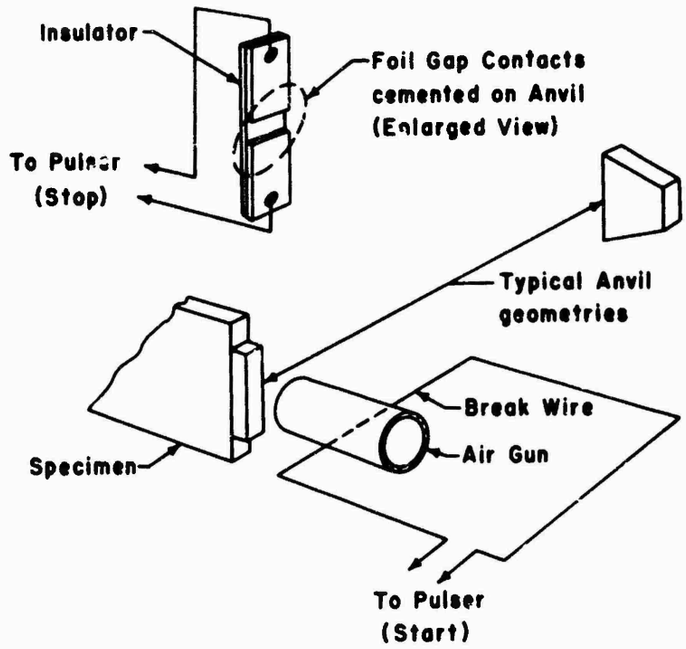

Figure 1 - Missile Velocity Measurement Circuits and Typical Anvil Geometries

4. Strain Measurement Technique

The strain records were obtained by a method similar to that used by Clark (3). Two etched constantan foil strain gages (Baldwin-Lima-Hamilton Corp., Electronics Division, FA-03-12-L, 120 ohm, gage factor 2.00, 0.04 inch gage length) were cemented (EPY-150) on opposite sides of the plastic.

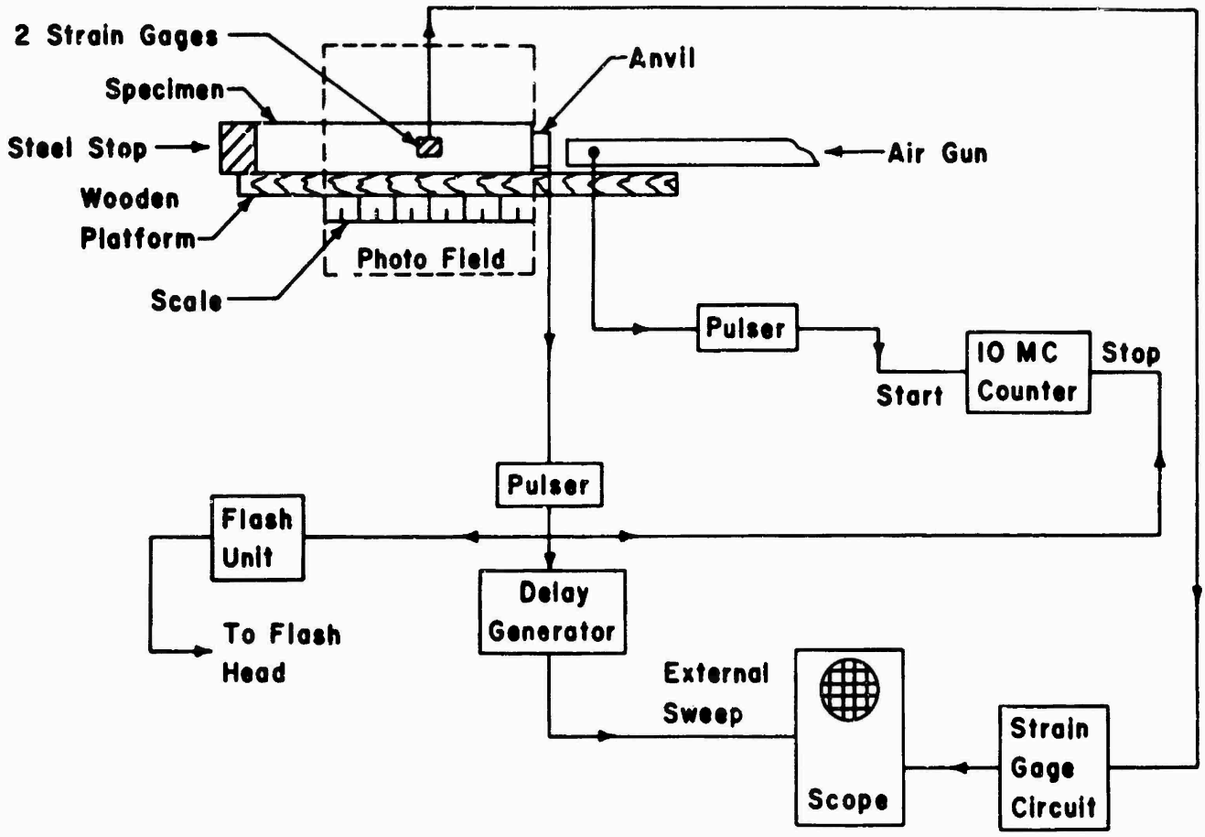

Figure 2 - Schematic Diagram of Apparatus for Loading, Strain Measurement, and Synchronization

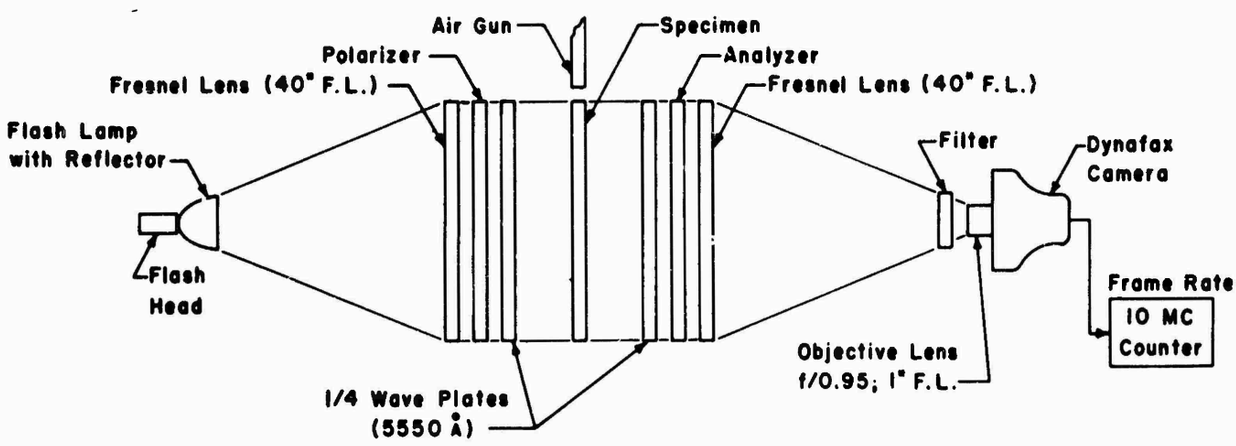

Figure 3 - Arrangement of Photographic and Optical Components

specimen and then connected in series to cancel bending strains. The strain gages were located 6 inches from the impacted end of the specimen and were oriented to respond to the longitudinal strain. The strain gage potentiometer circuit consisted of these two gages connected in series with a 1000-ohm output resistor and 7-1/2 volt battery. An oscilloscope was used to record the strain pulse.

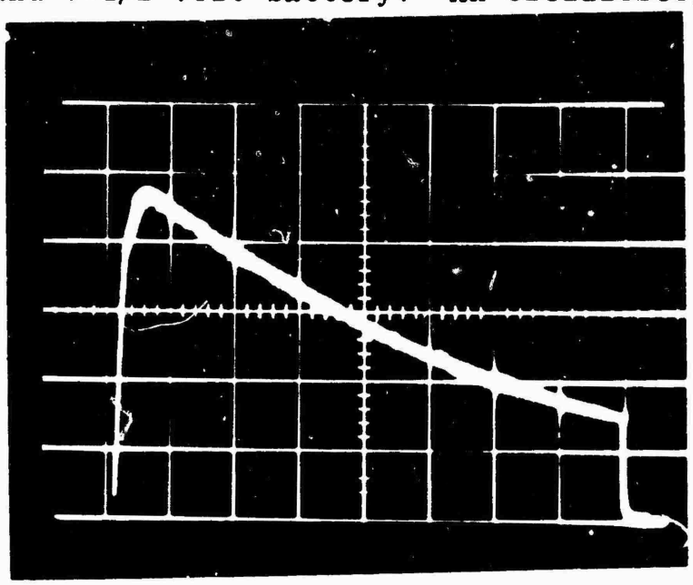

Figure 4 - Oscilloscope Record of the Modified Light Pulse Intensity
Note: Each large horizontal unit equals 0.5 millisecond

5. Birefringence Measurement Techniques

Two separate methods of observing dynamic birefringence were used:
a) high-speed photography,
b) photocell detection.

a. High-Speed Photography

The plastic specimen was placed within a dark field circular polariscope (Figs. 2 and 3) and impacted as described above. The resultant optical disturbance that propagated through the specimen was then photographed with a Beckman & Whitley(B&W) Model 326 Dynafax camera, which recorded two rows of 16 mm images on 35 mm film at 26,000 frames per second, with 1 microsecond exposure time per frame. The framing rate was determined by means of the Systron-Donner 10-megacycle electronic counter. The Kodak Royal-X pan film used was developed in DK-50 at 68°F for 10 minutes with constant agitation. The light source consisted of a xenon flash lamp (General Electric FT-506) used with a B&W electronic flash unit (Model 357) that had been modified to increase the intensity of the light pulse. The approximate value of the new light pulse intensity was 10^7 peak beam candlepower as determined with a commercial light-measurement device. This modified light pulse had a duration of 4 milliseconds; however, the light intensity decreased during this interval, as is shown in Figure 4. The useful portion of the pulse occurred during the first millisecond following the peak. A bandwidth of light from approximately 5000 to 6000 angstroms was obtained with a Wratten 58B filter.

b. Photocell Detection

The photocell technique was an alternate method for observing dynamic birefringence, and was based on a procedure described by Clark(3). The B&W flash system served as the light source. Left-handed circularly polarized light was projected through a slit 1/16-inch wide and 1/2-inch high that was masked off on the specimen. The light emerging from the slit then passed through a left-handed circular polarizer, a combination of filters (Wratten 77A and 58B), and a lens which converged the light on a small area of the photocell cathode (RCA Type 935). When the specimen was impacted, the fringes (seen as alternate light and dark areas) produced a modulation of light intensity on the photocell as this optical disturbance propagated past the slit, which was located a measured distance (1/2 inch or less) in front of the strain gage. The outputs from the photocell circuit and the strain gage circuit were simultaneously recorded with a dual-beam oscilloscope (Tektronix, Type 551) fitted with a Polaroid camera.

PART III. PHOTOGRAPHIC DETECTION OF SHAPE AND CHANGES IN STRESS PULSES

1. Purpose of experiments

The preliminary experimental efforts were concerned with production and detection of stress waves in commercially available transparent polymers (CR-39 plastic and a plasticized polyvinylbutyral material). The purpose was to observe the performance of the apparatus, to determine if the wave propagation was essentially one-dimensional in the regions more than several inches from the impacted surface, and to make some comparisons between two dissimilar polymeric materials. In one-dimensional wave propagation, where the component wavelengths are long compared to the transverse dimensions of the specimen, the elastic wave velocity (c) can be used to estimate the dynamic modulus of elasticity (E*) by the simple relationship

$$E^* = \rho c^2 \qquad (1)$$

where ρ is the density of the material.

2. Method: photographic

For the initial tests, the photographic method was chosen for detection of the birefringence.

3. Results with CR-39: approximately 1-dimensional propagation observed

Figure 5 is the photographic record of a propagating stress pulse produced in CR-39 plastic by an impact. In frame 1, the fringes are moving to the right and are approaching the strain gage (dark spot in frame); in subsequent frames the fringes pass the strain gage. In frame 5 a second group of fringes appears at the left end, moving to the right; this second group represents the trailing edge of the pulse. The area between the two groups of fringes represents the peak of the pulse; here the fringe order is almost constant. The fringes at the leading edge of the pulse are perpendicular to the longitudinal axis of the strain gage and have only a small degree of curvature, thus indicating that propagation is essentially one-dimensional in this region. These optical data then, delineate the general shape of the pulse.

4. Results with CR-39 and PVB: stress pulse crossing interface

Birefringence can also be used to show a stress pulse crossing an interface between two unlike materials. Figure 6 illustrates a similar impact upon the CR-39 component of a composite specimen. The photographic conditions were identical to those of Figure 5. The arrow at the bottom of this figure points to the interface on each frame between CR-39 (a high-modulus, rigid plastic) and plasticized polyvinylbutyral (PVB, a low-modulus, flexible plastic). In the first three frames, the fringes in the CR-39 are moving to the right toward the interface. In the last five frames, the leading fringes are shown traveling in the PVB.

a. Differences between material behavior

Several differences can be noted in the behavior of CR-39 and PVB:

1) The fringes move faster in the CR-39, owing to its greater $\frac{E^*}{\rho}$ value.

2) Near the interface, the fringes in the PVB are spaced more closely than in the CR-39, owing to different optical activity and PVB's lower $\frac{E^*}{\rho}$ value.

3) The fringe spacing in the PVB rapidly increases with increasing distance from the interface, showing a marked attenuation of the stress pulse with a concurrent decrease in steepness of the wave front.

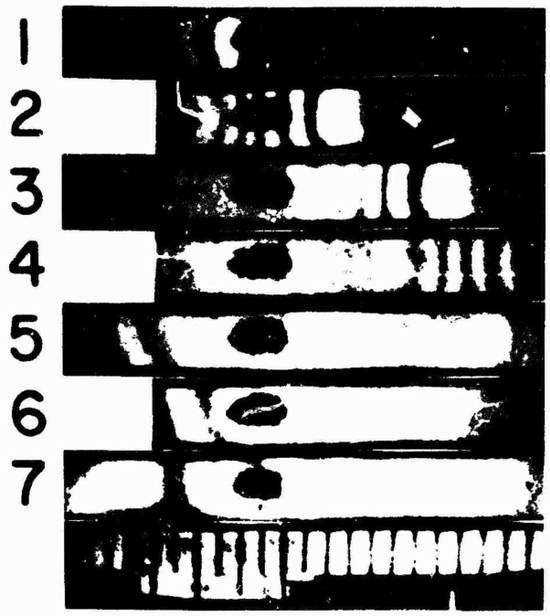

Figure 5 - CR-39 Specimen Impacted from the Left
(Missile is not shown)
(Optical wave is propagating to the r ght at approximately 5000 feet per second. Large dark spot in each frame is the strain gage. Time interval between frames is 38.5 microseconds; exposure time of each frame is 1 microsecond. Scale is marked in 1/2-inch divisions.)

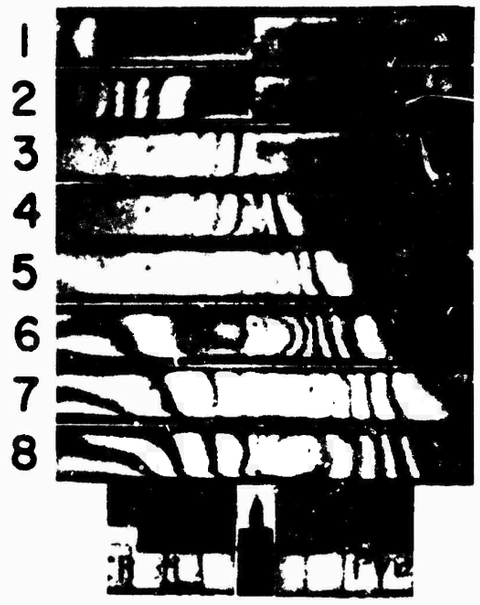

Figure 6 - CR-39 (left) and PVB (right) Composite
Specimen Impacted from the Left
(Missile is not shown)
(Optical wave is propagating to the right at approximately 5000 feet per second in the CR-39 and 2300 feet per second in the PVB. Time interval between frames is 38.5 microseconds; exposure time of each frame is 1 microsecond. Scale is marked in 1-inch divisions.) (Arrow points to the interface.)

b. Use of these observations

Observations of this type can be used in the study of stress-wave propagation, wave transmission at interfaces, and full-field stress distribution in a transparent material which has undergone mechanical impact.

PART IV. DYNAMIC STRAIN-FRINGE CONSTANTS OF CR-39 AND THEIR RATE DEPENDENCE

1. Equation deriving strain-fringe constants from data

Birefringence and mechanical response data are frequently expressed in terms of a strain-fringe constant (C) for the material,

$$C = \frac{\epsilon_l t}{n} \qquad (2)$$

where ϵ_l is the longitudinal strain, n is the fringe order, and t is the thickness of the specimen. Strain-fringe constants have been measured for many types of materials, but there is little published information concerning their rate dependences.

2. Advantages of using CR-39

The above-described experimental techniques were used to determine for CR-39 plastic the values of strain-fringe constants over a range of strain rates. CR-39 was chosen because its degree of optical activity was conveniently large for the development and testing of the apparatus, and birefringence data were available (3) for the lower values of strain rates attainable by this technique.

3. Methods and calculations

In order to specify a rate of strain, only the leading edge of the strain pulse was examined; the slope of the approximately linear portion of the edge was defined as the apparent strain rate and applies to all values of strain rate discussed in this report. The slopes were determined from the strain gage records by fitting the experimental data to a straight line by a method of least squares. The durations of these linear portions of the leading edge varied from about 15 to 200 microseconds, depending on the strain rate. The length of this portion of the pulse, which corresponded to these time durations, was 1 inch or greater, thus the averaging effect of the 0.04-inch gage could be neglected.

A series of apparent strain rates was obtained by varying the type of anvil. To avoid any possible effect of amplitude upon the results, all measurements of apparent strain rate and strain-fringe constant were restricted to experimental data occurring between fringe orders 1.5 through 4.0, inclusive. There was no evidence that the series of impacts produced permanent deformations in the specimens. Their appearance in the polariscope was unchanged and the strain-fringe data showed no cumulative effects.

At strain rates greater than 10,000 percent per second, the fringes were so closely spaced that they could not be resolved by the high-speed photographic system. Accordingly, in all dynamic tests of CR-39, the fringes were detected by a photocell, the typical output of which is shown in an oscilloscope record (Fig. 7).

To determine the strain magnitude corresponding to each value of fringe order, the photocell record in Fig. 7 must be displaced to the right along the time axis to compensate for the small distance on the specimen between the slit and the gage site. The amount of this displacement is computed from the wave velocity and the distance between the slit and the gage. For the photograph shown in Fig. 7, the required displacement is 4.3 microseconds.

When the integral and half-integral fringe orders for the leading edge were plotted against the corresponding strain magnitudes, a linear graph was obtained (Fig. 8). The slope of this line, which was determined by the method of least squares, was used along with the specimen thickness to calculate the dynamic strain-fringe constant by means of Eq.(2).

The static value of the strain-fringe constant was obtained by the following method: The specimen was stretched in the polariscope by means of an Instron Tester, Model TT-C1, at a rate of 0.34 percent strain per minute. As each dark fringe appeared, the machine was stopped for a few seconds and the strain value was obtained from an extensometer mounted on the specimen (Riehle "clamp-o-matic", graduated in 0.0001-inch divisions, with a 2-inch gage length). A plot similar to that of Figure 8 yielded the value of the static strain-fringe constant.

The average value of static strain, indicated by the strain gages, when computed from the manufacturer's gage factor, was found to be about 96.5 percent of the true strain. This was determined by comparing the gage reading with that indicated by the extensometer during extension of the CR-39 specimen by the Instron at a rate of 0.34 percent strain per

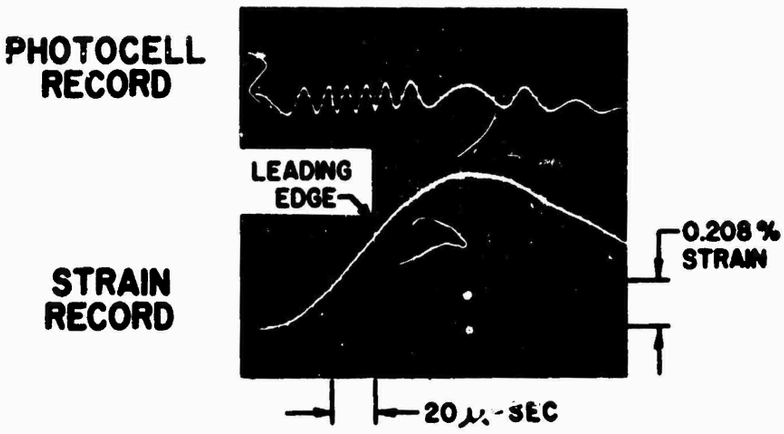

Figure 7 - Typical Strain-Gage and Photocell Records Obtained Simultaneously with the Oscilloscope

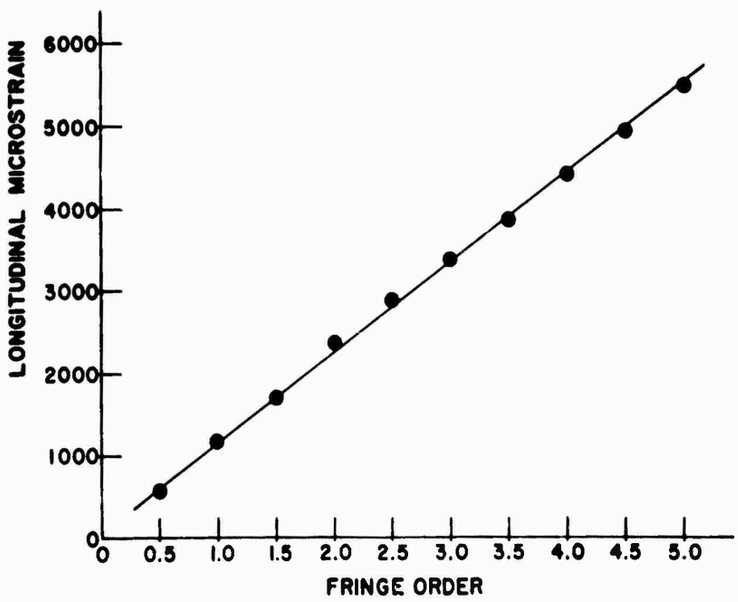

Figure 8 - Typical Relationship between Fringe Order and Longitudinal Strain Magnitude for the Leading Edge of the Pulse.

Note: Slope is used to calculate the dynamic longitudinal strain-fringe constant.

minute. This response factor, which is in good agreement with a published figure (4) for foil strain gages, was assumed to give the dynamic response factor also and was therefore used to correct all the strain gage measurements obtained dynamically.

The static modulus of CR-39 was determined by stretching the specimen in the Instron at a rate of 2.8 percent strain per minute and taking readings from a load cell and the extensometer. The dynamic modulus, E*, of CR-39, was estimated by means of Eq (1), $E^* = \rho c^2$.

The density (ρ), which was found to be 1.32 grams per cubic centimeter, was determined by the method of hydrostatic weighing, with water serving as the immersion fluid. The longitudinal wave velocity, c, was obtained from the time required for a longitudinal pulse, produced by impact, to travel from the strain gage site to the end of the specimen and to return to the gage site as a reflected pulse. This velocity was found to be 1.56×10^5 centimeters per second.

4. Relation of strain-fringe constants to apparent strain rate

a. Table of strain rates and strain-fringe constants

Twenty-two dynamic strain-fringe experiments were performed as described above at the U.S. Army Natick Laboratories. The apparent strain rate varied from 2,300 to 30,600 percent strain per second; the longitudinal strain-fringe constants (C), computed from the experimental data, varied from 223 to 280 microstrain-inch per fringe. The results are presented in Table I and in Figure 9.

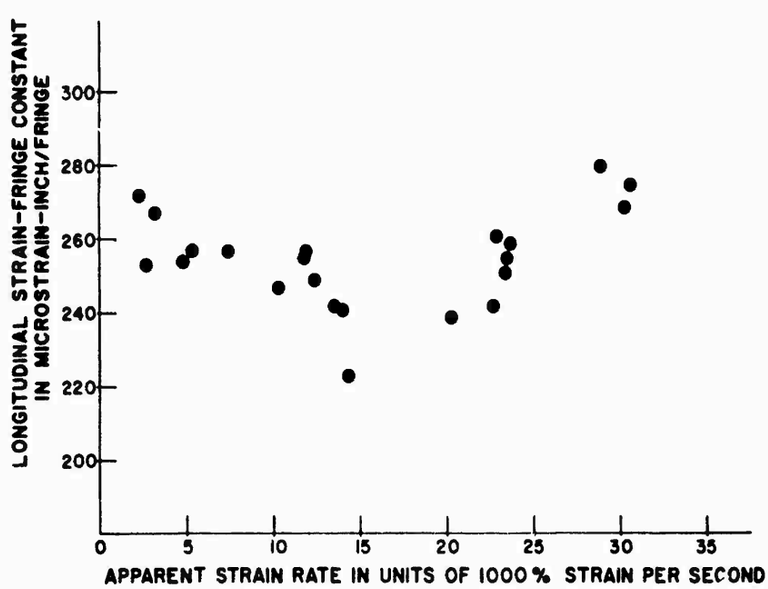

Figure 9 - Dynamic Longitudinal Strain-Fringe Constant as a Function of Apparent Strain Rate for the Leading Edge of the Pulse. (Based on data in Table I)

TABLE I

STRAIN RATE AND DYNAMIC STRAIN-FRINGE CONSTANT VALUES FOR CR-39 STRIP SPECIMENS

Test No.	Apparent Strain Rate (in units of 1000% strain/second)	Dynamic Longitudinal Strain-Fringe Constant (C) (in units of microstrain-inch/fringe)
1	13.5	242
2	12.4	249
3	10.3	247
7	2.3	272
8	2.7	253
10	5.3	257
11	7.4	257
12	11.9	257
13	23.5	255
14	30.6	275
15	30.3	269
18	28.9	280
19	23.4	251
20	3.2	267
21	23.7	259
23	14.0	241
24	11.8	255
27	22.9	261
28	22.7	242
29	20.3	239
30	14.3	223
31	4.8	254
Average	15.4	255

b. No trend indicated

No distinct trend emerged. Attempts to fit the data to a straight line by the method of least squares indicated a very low coefficient of correlation. Although it might be possible, empirically, to fit these data to higher-order non-linear equations, it was felt that the consequent implication of a transition in CR-39 due to an apparent minimum in the strain-fringe values was not warranted.

5. Comparison of dynamic strain-fringe data with static values

Accordingly, the dynamic strain-fringe data were averaged and then compared to the static values.

a. Data from NLABS and Clark investigations tabulated

Table II summarizes the results from both this investigation and that of Clark (3). Clark did not characterize his dynamic values in terms of a strain rate but used, instead, an effective loading time. He averaged his 10 dynamic values and made a linear interpolation between this average and his static values when all were plotted against the logarithm of loading time. The NLABS investigators treated their data in a similar fashion, i.e., by making a linear interpolation (Fig. 10) between the averaged dynamic and static points when they were all plotted against the logarithm of apparent strain rate.

b. Slight trend indicated

Both treatments illustrate a similar trend, i.e., the longitudinal strain-fringe constant decreases with increasing apparent strain rate (decreasing loading time). This trend is small, only 6 or 7 strain-fringe units per order of magnitude in strain rate, hence is too slight to be detected by these types of dynamic experiments alone, even over the somewhat wider range of dynamic strain rates provided by the NLABS investigation.

6. Discussion

It is concluded that, at room temperature, the longitudinal strain-fringe constant of CR-39 plastic decreases slightly with increasing apparent strain rate in the range of 10^{-2} to 3×10^{4} percent strain per second.

TABLE II

COMPARISON OF DYNAMIC AND STATIC VALUES OF STRAIN-FRINGE CONSTANTS AND MODULI FOR CR-39

NLABS and Clark Investigations

	NLABS Investigation	Clark Investigation(3)
Apparent dynamic strain rate (percent strain/sec)		
Range	2,300 to 30,600[a]	3,800 to 14,600[b]
Average	15,400[a]	7,400[b]
. . . . .		
Strain-fringe constants (microstrain-inch/fringe)		
Dynamic:		
Range	223 to 280[a]	237 to 276[b]
Average	255[a]	260
Static, average	299[c]	280
Modulus (psi)		
Static	278,000[d]	276,000 to 330,000
Dynamic	468,000[d]	452,000

a 22 values. Source: Table I

b 10 values. Values for apparent dynamic strain rate were estimated by the authors of this report. See footnote in Sec. I-4

c Values obtained as in Sec. IV-3

d Values obtained as in Sec. IV-3

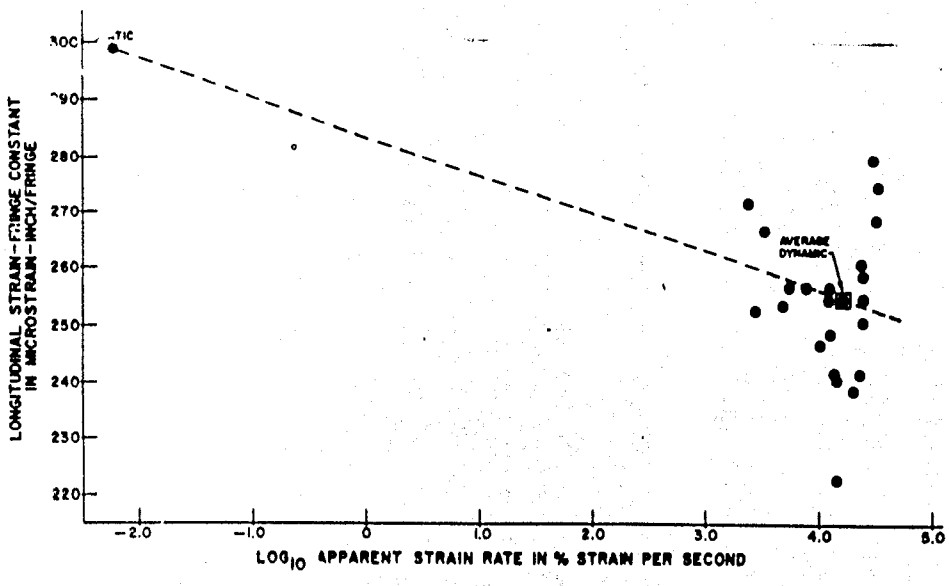

Figure 10 - Longitudinal Strain-Fringe Constant Plotted against Logarithm of Apparent Strain Rate for the Leading Edge of the Pulse

A preliminary molecular interpretation of these results must involve those groups of the molecule which are optically anisotropic. A smaller strain-fringe constant means a smaller ratio of mechanical strain to optical retardation. If there is only one optically active group in the CR-39 repeat unit, the data indicate that as the strain rate increases, this group would apparently undergo more orientation or deformation relative to the total strain. If several types of optically active groups are present, each type may contribute different amounts and directions of retardation to the overall optical effect. Unfortunately, with CR-39, the latter is probably the case. This thermosetting material, a polymer of allyl diglycol carbonate, contains a complex repeat unit with several probable sources of optical activity, namely: two carbonate groups and an ether linkage. Therefore interpretation of the observed time-dependent effect in terms of specific molecular group(s) is not now possible.

From an engineering point of view, the observed rate dependency is an important factor to be considered in any dynamic study involving the photoelastic properties of CR-39. Measurements of stress or strain distribution or of wave transmission at interfaces with armor that contains CR-39 components would have to be corrected accordingly. These strain-optic data would also be necessary in studies of dynamic stresses in other mechanical structures where CR-39 models are used for photoelastic measurements and analysis.

References

1. Brown, G.W. and D.R. Selway, Frequency Response of a Photo-Viscoelastic Material. Exp Mechanics, 4, 57 (1964)

2. Dally, J.W., W.F. Riley, and A.J. Durelli, A Photoelastic Approach to Transient Stress Problems Employing Low-Modulus Materials. J. Appl Mechanics, 26, 613 (1959)

3. Clark, A.B.J., Static and Dynamic Calibration of a Photoelastic Model Material, CR-39. Soc Exp Stress Anal Proc. 14, 195 (1956)

4. Clark, A.B.J. and R.J. Sanford, A Comparison of Static and Dynamic Properties of Photoelastic Materials. Exp Mechanics, 3, 148 (1963)

5. Flynn, P.D., J.T. Gilbert, and A.A. Roll, Photoelastic Studies of Dynamic Stresses in Low Modulus Materials. Proc Army Conf Dynamic Behavior of Materials and Structures, Springfield, Mass. Sept. 1962

6. Flynn, P.D., J.T. Gilbert, and A.A. Roll, Some Recent Developments in Dynamic Photoelasticity, J Soc Phot Instr Eng, 2, 128 (1964)

7. Andrews, R.D., and J.F. Rudd, Photoelastic Properties of Polystyrene in the Glassy State. I. Effect of Molecular Orientation. J. Appl Phy, 28, 1091 (1957)

8. Rudd, J.F., and E.F. Gurnee, Photoelastic Properties of Polystyrene in the Glassy State. II. Effect of Temperature. J. Appl Phy, 28, 1096 (1957)

9. Rudd, J.F. and R.D. Andrews, Photoelastic Properties of Polystyrene in the Glassy State, III. Styrene Derivatives and Copolymers. J. Appl Phy, 31, 818 (1960)

10. Stein, R.S., S. Onogi, K. Sasaguri, and D.A. Keedy, Dynamic Birefringence of High Polymers II. J. Appl Phy, 34, 80 (1963)

UNCLASSIFIED
Security Classification

DOCUMENT CONTROL DATA - R&D
(Security classification of title, body of abstract and indexing annotation must be entered when the overall report is classified)

1. ORIGINATING ACTIVITY *(Corporate author)* U. S. Army Natick Laboratories Natick, Massachusetts	2a. REPORT SECURITY CLASSIFICATION Unclassified 2b. GROUP N/A

3. REPORT TITLE
STUDY OF DYNAMIC BIREFRINGENCE AND STRAIN PRODUCED IN TRANSPARENT POLYMERS BY MECHANICAL IMPACT

4. DESCRIPTIVE NOTES *(Type of report and inclusive dates)*
Progress Report January 1964 - June 1965

5. AUTHOR(S) *(Last name, first name, initial)*
Wilde, Anthony F., Ricca, John J., Lynch, Francis deS.

6. REPORT DATE February 1966	7a. TOTAL NO. OF PAGES 19	7b. NO. OF REFS 10
8a. CONTRACT OR GRANT NO. b. PROJECT NO. 1L013001A91A c. d.	9a. ORIGINATOR'S REPORT NUMBER(S) 66-6 CM 9b. OTHER REPORT NO(S) *(Any other numbers that may be assigned this report)* C&OM-18	

10. AVAILABILITY/LIMITATION NOTICES
Distribution of this document is unlimited. Release to CFSTI is authorized.

11. SUPPLEMENTARY NOTES	12. SPONSORING MILITARY ACTIVITY Materials Research Branch, Clothing & Organic Materials Division, U. S. Army Natick Laboratories, Natick, Massachusetts

13. ABSTRACT To obtain basic information about the mechanical and optical response of polymers, the stress-wave propagation in transparent plastics is being studied at the U. S. Army Natick Laboratories by observation of the dynamic strain and birefringence produced by mechanical impact. Instrumentation and techniques have been developed to achieve the following: synchronization; projectile alignment; intense, monochromatic illumination; and approximate one-dimensional wave propagation in the impacted specimen. Observations were made of the comparative wave shapes and velocities in two dissimilar polymers (CR-39 and polyvinylbutyral). Changes in wave characteristics were noted during crossing of an interface between these materials.

In this initial study, the dynamic strain-fringe constant of CR-39 plastic was studied over a range of apparent strain rates between 2,300 and 30,600 percent strain per second by the simultaneous measurement of the strain and birefringence occurring during the nearly linear leading edge of the strain pulse. Over this dynamic range no distinct dependence on the strain rate could be discerned. However, comparison of the average dynamic strain-fringe constant with the corresponding static value indicated a slight rate dependence over this larger total range of apparent strain rates.

DD FORM 1 JAN 64 1473

UNCLASSIFIED
Security Classification

UNCLASSIFIED
Security Classification

14. KEY WORDS	LINK A ROLE	LINK A WT	LINK B ROLE	LINK B WT	LINK C ROLE	LINK C WT
Impact tests	8					
Stress-strain measurements	8					
Dynamics	9		10			
Plastics	9		5			
Transparent	0					
Armor plate	4					
Test methods			8			
Measurement			8			
Stresses			9			
Wave propagation			9			
Observation			10			
Strains			10			
Birefringence			10			

INSTRUCTIONS

1. ORIGINATING ACTIVITY: Enter the name and address of the contractor, subcontractor, grantee, Department of Defense activity or other organization *(corporate author)* issuing the report.

2a. REPORT SECURITY CLASSIFICATION: Enter the overall security classification of the report. Indicate whether "Restricted Data" is included. Marking is to be in accordance with appropriate security regulations.

2b. GROUP: Automatic downgrading is specified in DoD Directive 5200.10 and Armed Forces Industrial Manual. Enter the group number. Also, when applicable, show that optional markings have been used for Group 3 and Group 4 as authorized.

3. REPORT TITLE: Enter the complete report title in all capital letters. Titles in all cases should be unclassified. If a meaningful title cannot be selected without classification, show title classification in all capitals in parenthesis immediately following the title.

4. DESCRIPTIVE NOTES: If appropriate, enter the type of report, e.g., interim, progress, summary, annual, or final. Give the inclusive dates when a specific reporting period is covered.

5. AUTHOR(S): Enter the name(s) of author(s) as shown on or in the report. Enter last name, first name, middle initial. If military, show rank and branch of service. The name of the principal author is an absolute minimum requirement.

6. REPORT DATE: Enter the date of the report as day, month, year; or month, year. If more than one date appears on the report, use date of publication.

7a. TOTAL NUMBER OF PAGES: The total page count should follow normal pagination procedures, i.e., enter the number of pages containing information.

7b. NUMBER OF REFERENCES: Enter the total number of references cited in the report.

8a. CONTRACT OR GRANT NUMBER: If appropriate, enter the applicable number of the contract or grant under which the report was written.

8b, 8c, & 8d. PROJECT NUMBER: Enter the appropriate military department identification, such as project number, subproject number, system numbers, task number, etc.

9a. ORIGINATOR'S REPORT NUMBER(S): Enter the official report number by which the document will be identified and controlled by the originating activity. This number must be unique to this report.

9b. OTHER REPORT NUMBER(S): If the report has been assigned any other report numbers *(either by the originator or by the sponsor)*, also enter this number(s).

10. AVAILABILITY/LIMITATION NOTICES: Enter any limitations on further dissemination of the report, other than those imposed by security classification, using standard statements such as:

(1) "Qualified requesters may obtain copies of this report from DDC."

(2) "Foreign announcement and dissemination of this report by DDC is not authorized."

(3) "U. S. Government agencies may obtain copies of this report directly from DDC. Other qualified DDC users shall request through _____."

(4) "U. S. military agencies may obtain copies of this report directly from DDC. Other qualified users shall request through _____."

(5) "All distribution of this report is controlled. Qualified DDC users shall request through _____."

If the report has been furnished to the Office of Technical Services, Department of Commerce, for sale to the public, indicate this fact and enter the price, if known.

11. SUPPLEMENTARY NOTES: Use for additional explanatory notes.

12. SPONSORING MILITARY ACTIVITY: Enter the name of the departmental project office or laboratory sponsoring *(paying for)* the research and development. Include address.

13. ABSTRACT: Enter an abstract giving a brief and factual summary of the document indicative of the report, even though it may also appear elsewhere in the body of the technical report. If additional space is required, a continuation sheet shall be attached.

It is highly desirable that the abstract of classified reports be unclassified. Each paragraph of the abstract shall end with an indication of the military security classification of the information in the paragraph, represented as *(TS)*, *(S)*, *(C)*, or *(U)*.

There is no limitation on the length of the abstract. However, the suggested length is from 150 to 225 words.

14. KEY WORDS: Key words are technically meaningful terms or short phrases that characterize a report and may be used as index entries for cataloging the report. Key words must be selected so that no security classification is required. Idenfiers, such as equipment model designation, trade name, military project code name, geographic location, may be used as key words but will be followed by an indication of technical context. The assignment of links, rules, and weights is optional.

UNCLASSIFIED
Security Classification