USL Report No. 714

AD 628938

Measurements of the Spatial Correlation of Ambient Noise Using a Deep-Submergence Vehicle (Diving Saucer SP-300)

GERALD L. ASSARD
BEVERLY C. HASSELL
Signal Analysis Branch
Acoustic Research Division

CLEARINGHOUSE
FOR FEDERAL SCIENTIFIC AND
TECHNICAL INFORMATION

Hardcopy	Microfiche		
$1.00	$0.50	25 pp	as

ARCHIVE COPY

Code 1

2 February 1966

DDC
RECEIVED
MAR 10 1966
DDC-IRA F

Distribution of this document is unlimited.

U. S. Navy Underwater Sound Laboratory
Fort Trumbull, New London, Connecticut

1 to USNUSL Ser 984-137

ABSTRACT

During February and March 1965, experimental measurements were made of the spatial correlation of ambient noise in the horizontal and vertical planes at two different depths using Diving Saucer SP-300 as a measuring platform. A hydrophone array, which was designed to form a geometrically spaced line array that could be rotated to receive data in either plane, was attached to the SP-300. The hydrophone outputs were band-passed through 400-1200 cps Butterworth filters and recorded on a seven-channel, battery-operated tape recorder. The recorded data were played back through 400-600, 600-800, 800-1000, and 1000-1200 cps filters and selected pairs were cross-correlated. Good agreement was found between the experimental values of spatial correlation and the theoretical values, except when measurements were hampered by shipping in the area and pitch and roll and rotation of the SP-300.

ADMINISTRATIVE INFORMATION

The effort described in this report was performed under USL Project No. 1-405-00-00 and Navy Subproject and Task No. SF 101 03 15-11286.

REVIEWED AND APPROVED: 2 February 1966

H. E. Nash
Technical Director

R. L. Corkran, Jr., Captain, USN
Commanding Officer and Director

TABLE OF CONTENTS

	Page
LIST OF ILLUSTRATIONS	iii
INTRODUCTION	1
MEASUREMENTS	2
Data Acquisition and Processing	7
Experimental Analysis	9
CONCLUSIONS	19
INITIAL DISTRIBUTION LIST	Inside Back Cover

LIST OF ILLUSTRATIONS

Figure		Page
1	Bathymetric Chart of the SP-300 Operating Area	3
2	Two 50-pound Iron Weights Pinned to the SP-300	4
3	Mercury Ballast System and One of the Water Jets Used on the SP-300	5
4	T-Shaped Unit Used in Gathering Acoustic Data	6
5	Block Diagram of One of the Six Identical Input Stages to the Tape Recorder and the Tape Storage Method	7
6	Block Diagram of the Processing System for One of the Hydrophone Output Pairs	8
7	Comparison of Experimental Plots for Horizontal Receivers (at a Depth of 300 meters during Sea State 4 on 9 March 1965 at 1328 Hours) with the Theoretical Curves	11
8	Comparison of the Average Values of the Correlation $\pm 1\sigma$ for Horizontal Receivers (at a Depth of 300 meters during Sea State 1 on 17 March 1965 at 1330 Hours) with the Theoretical Curves	12
9	Comparison of the Average Values of the Correlation $\pm 1\sigma$ for Horizontal Receivers (at a Depth of 150 meters during Sea State 1 on 17 March 1965 at 1521 Hours) with the Theoretical Curves	13
10	Comparison of the Average Values of the Correlation $\pm 1\sigma$ for Horizontal Receivers (at a Depth of 150 meters during Sea State 1 on 17 March 1965 at 1543 Hours) with the Theoretical Curves	14
11	Comparison of the Average Values of the Correlation $\pm 1\sigma$ for Horizontal Receivers (at a Depth of 150 meters during Sea State 2 on 18 March 1965 at 1050 Hours) with the Theoretical Curves	15
12	Comparison of the Average Values of the Correlation $\pm 1\sigma$ for Horizontal Receivers (at a Depth of 150 meters during Sea State 4 on 9 March 1965 at 1609 Hours) with the Theoretical Curves	16
13	Comparison of the Average Values of the Correlation $\pm 1\sigma$ for Horizontal Receivers (at a Depth of 150 meters during Sea State 4 on 9 March 1965 at 1633 Hours) with the Theoretical Curves	17
14	Comparison of the Average Values of the Correlation $\pm 1\sigma$ for Vertical Receivers (at a Depth of 150 meters during Sea State 1 on 17 March 1965 at 1500 Hours) with the Theoretical Curves	18

MEASUREMENTS OF THE SPATIAL CORRELATION OF AMBIENT NOISE USING A DEEP-SUBMERGENCE VEHICLE (Diving Saucer SP-300)

INTRODUCTION

The spatial correlation of ambient noise has been derived by assuming that uniformly and independently distributed noise sources on the surface of the ocean radiate energy with a cosine directionality pattern. This correlation is a function of both the position of the array (i.e., horizontal or vertical), as well as of the distance separating the receivers along the array. A complete mathematical derivation of this function, including specific equations, has been published.[1]

Experimental measurements have been found to verify this model for a vertical array with geometrically spaced elements and for frequency bands of 200-400, 400-600, 600-800, and 800-1000 cps.[2] Experimental comparisons have now been made for horizontal and vertical positions of a geometrically spaced six-element array and for frequency bands covering the range of 400-1200 cps.

---

[1] Benjamin F. Cron and Charles H. Sherman, "Spatial Correlation Functions for Various Noise Models," *Journal of the Acoustical Society of America*, vol. 34, no. 11, November 1962, pp. 1732-1736. An Addendum to this article appears in vol. 38, no. 5, November 1965, p. 885 of the *Journal*.

[2] Benjamin F. Cron, Beverly C. Hassell, and Frank J. Keltonic, "Comparison of Theoretical and Experimental Values of Spatial Correlation," *Journal of the Acoustical Society of America*, vol. 37, no. 3, March 1965, pp. 523-529. (Additional information is contained in a report currently being prepared at USL, "The Effect of Wind Speed on the Spatial Correlation of Ambient Noise," by Beverly C. Hassell and Frank J. Keltonic.)

MEASUREMENTS

During February and March 1965, experimental measurements of spatial correlation of ambient noise were made in the Pacific Ocean south of San Diego, Calif., in the horizontal and vertical planes at depths of 150 and 300 meters. Simultaneously, it was possible to test the use of Diving Saucer SP-300 as a measuring platform.[3]

The area south of San Diego was selected as the testing area because of its proximity to the Navy Electronics Laboratory, where the SP-300 was berthed, and because this area was removed from heavy shipping lanes. Depth restrictions were another factor influencing the selection of this site. For safety reasons, it was necessary to carry out these experiments in shallow waters — less than 350 meters in depth. A bathymetric chart (Fig. 1) shows that although the area met the depth requirements, it was not ideal because of its contours.

The SP-300 is a self-powered vehicle operating from a support ship; it is capable of diving to a depth of 300 meters and working at this depth for a period of up to 4 hours. Safety considerations required the support ship to remain within a radius of 3 miles of the diving site. In addition, a small boat equipped with a sonar voice channel, sonar tracker, and citizens band radio monitored the maneuvers of the SP-300 and acted as a communication link between the SP-300 and the support vessel until the former returned to the surface.

In order to maximize the data-recording period, two 50-pound iron weights are mechanically pinned to the SP-300, as shown in Fig. 2, to aid in reducing the descent and ascent time. With both weights attached, the SP-300 is negatively buoyant; with only one weight attached, it attains neutral buoyancy with the assistance of a centrally located water ballast tank. While neutrally buoyant, horizontal trim is established with the use of a mercury ballast system, which can be seen in Fig. 3. When the trim has been adjusted at the desired depth, the SP-300 uses battery-powered water jets (see Fig. 3) for maneuvering. Independent rotation of these jets allows free movement in three dimensions. When the experiments are completed, rapid ascent is accomplished by releasing the second iron weight. In the event of an emergency, ascent can be made faster by releasing an additional 400 pounds of lead ballast.

[3]Gerald L. Assard, "Trip Report Describing Acoustic Measurements Aboard the Diving Saucer During February and March 1965," USL Technical Memorandum No. 913-208-65, 20 October 1965.

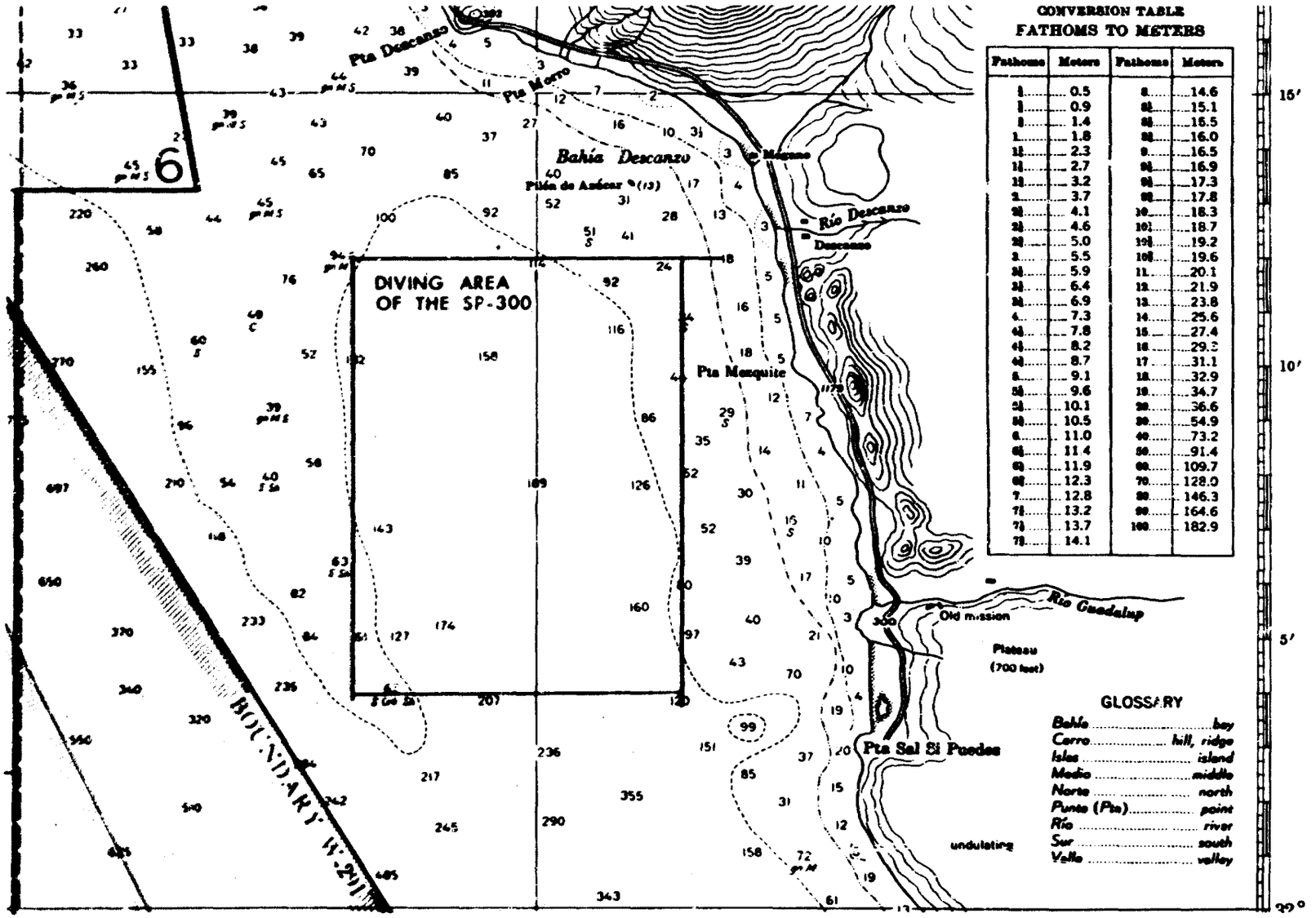

Fig. 1 - Bathymetric Chart of the SP-300 Operating Area

Fig. 2 - Two 50-pound Iron Weights Pinned to the SP-300

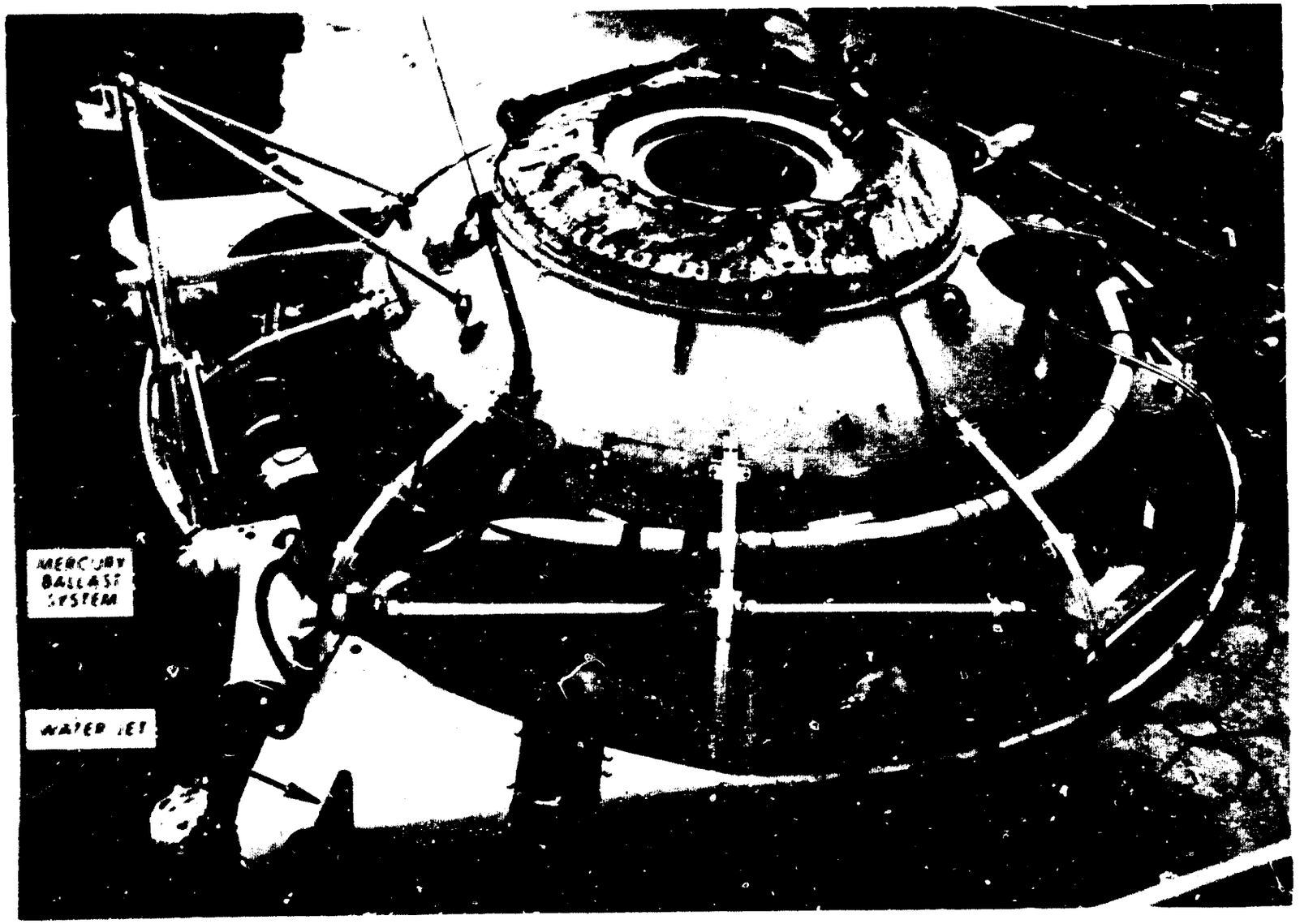

Fig. 3 - Mercury Ballast System and One of the Water Jets Used on the SP-300

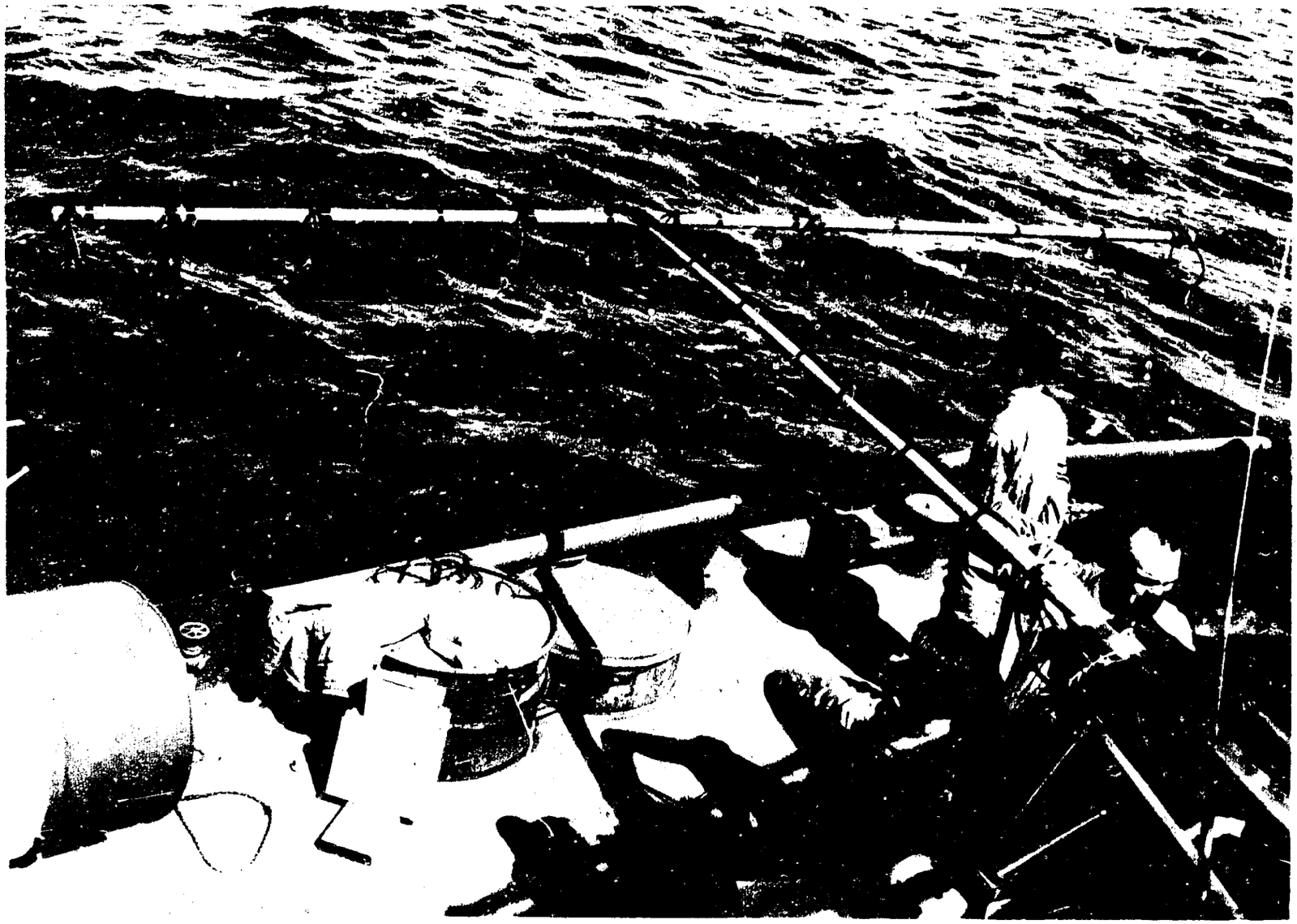

Fig. 4 - T-Shaped Unit Used in Gathering Acoustic Data

All test equipment used on and within the SP-300 was designed to meet weight and size specifications: The combined weight of the observer and the equipment was limited by the buoyancy of the saucer to 300 pounds; the size of the inboard equipment was determined by the space available to position the electronic recording system. The latter allowed the observer very little freedom of physical movements. In fact, upon completion of a dive, the observer frequently experienced leg cramps.

These space limitations dictated the manner in which the measurement program was conducted. Without space and weight restrictions, a system utilizing polarity coincidence clipper correlators, along with a digital readout, could have been designed to obtain a more complete set of data.

DATA ACQUISITION AND PROCESSING

The acoustic data were gathered by means of a 15-foot, free-flooding aluminum array consisting of 6 geometrically spaced hydrophones. The array formed a T with the support arm, which was mounted in a hydraulically operated rotating bracket. This arrangement made both horizontal and vertical measurements possible. Figure 4 shows the T-shaped unit being installed into the bracket.

Each of the six hydrophone cable assemblies consists of an R-100-LT hydrophone element and a field effect transistor preamplifier with +40 db of gain. Each preamplifier was zener-regulated to provide the required degree of decoupling to the common DC power supply. The outputs of the preamplifiers were resistively matched to the 400-1200 cps Butterworth filters. Variable gain amplifiers were adjusted for proper recording levels into the 7-channel tape recorder. The following block diagram (Fig. 5) illustrates one of the six identical input stages to the tape recorder.

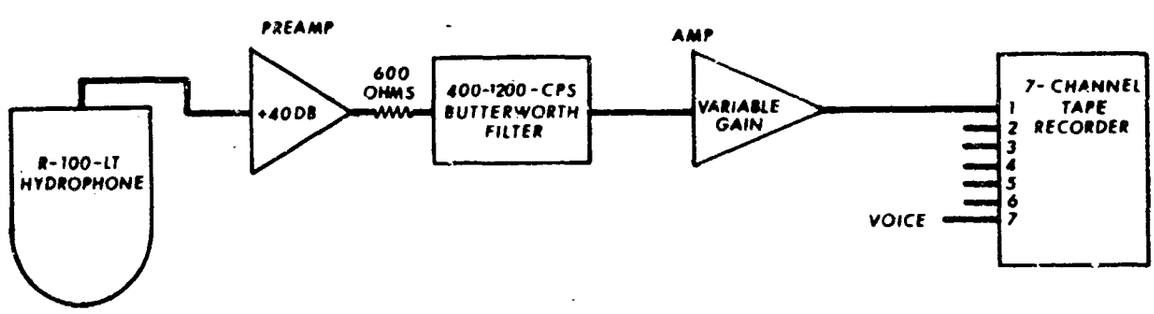

Fig. 5 - Block Diagram of One of the Six Identical Input States to the Tape Recorder and the Tape Storage Method

Given 6 geometrically spaced receivers, there are 15 different combinations of hydrophone pairs available for cross-correlation. In order to avoid errors due to tape head block misalignment, only six hydrophone pairs could be used as inputs to the correlation processing system.

The hydrophone pairs and their spacings are specified as follows:

Hydrophones	Spacing (in feet)
1 and 3	2.57
2 and 4	4.04
3 and 5	6.34
1 and 5	8.91
4 and 6	9.96
2 and 6	14.00

An example of the processing system is shown in Fig. 6 for one of the hydrophone output pairs.

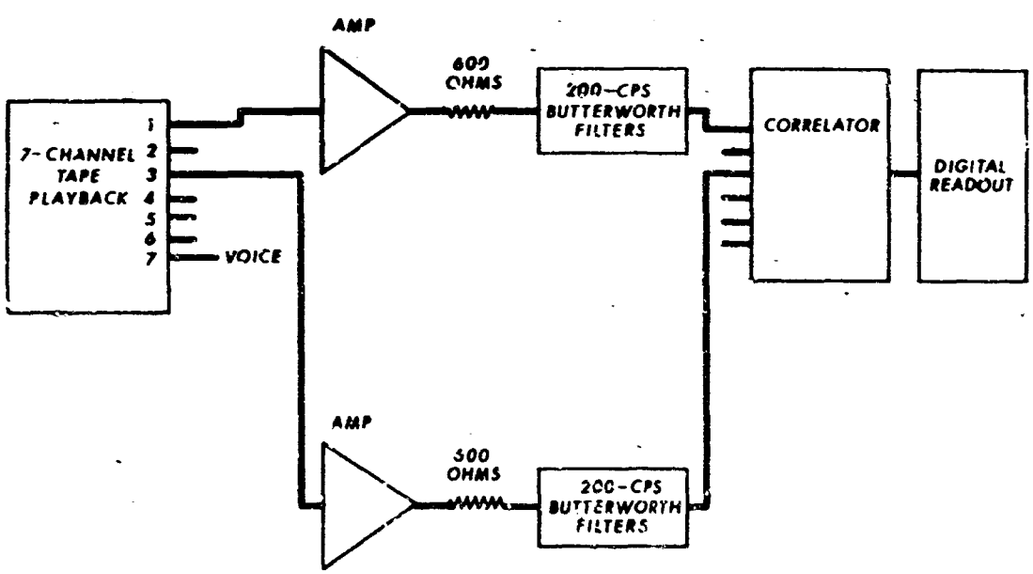

Fig. 6 - Block Diagram of the Processing System for One of the Hydrophone Output Pairs

Each channel of 400-1200-cps ambient noise, as previously recorded, was passed through an amplifier, which was used to match the impedance to the 200-cps Butterworth filters and to set the desired levels into the correlating block.[4] This process was repeated to obtain correlation of ambient noise as a function of spacing for frequency bands of 400-600, 600-800, 800-1000, and 1000-1200 cps. The data, including calibration information, were digitally recorded and printed on paper tape and then transferred to IBM punched cards for computer analyses.

EXPERIMENTAL ANALYSIS

In order to comply with the assumptions underlying the theoretical model of ambient noise under investigation, it is essential that the samples be free from extraneous noise sources. Consequently, a narrow-band spectrum analysis was performed on all recorded data prior to correlation processing. About 50 percent of the data was found to be contaminated by extraneous noise sources, such as shipping, and therefore was eliminated from further study. In most instances, the presence of shipping had already been detected during the recording period, and this narrow-band spectrum analysis provided additional justification for removing this portion of the data. All remaining data were analyzed using an IBM 704 computer program designed (1) to perform any necessary offset and scale-factor corrections indicated by the calibration of the correlator and (2) to transform the data to unclipped correlation values. These values were printed out, as well as stored, on a magnetic tape, which was used to obtain a graphical presentation of the spatial correlation measurements.

Plots of experimental values of spatial correlation versus distance in units of geometric mean wave length were superimposed on the corresponding theoretical curves for the various frequency bands. The derivations of these theoretical curves has already been discussed.[5] These plots were used to show the degree of agreement with theory, as well as the time stability of the correlation measurements. Agreement between the theoretical curves and the experimental data points was found to depend heavily upon the time stability of the measurements. Some plots showed a large variation among the data points with respect to time.

---

[4] James J. Faran and Robert Hills, "Correlators for Signal Reception," Harvard University Acoustics Research Laboratory, Technical Memorandum No. 27, 15 September 1952.

[5] See Cron and Sherman, footnote 1.

Although the spectrum analysis gave no indication of interference, subsequent investigation showed that extraneous noise sources had contaminated these sets of data. When the variation in the data points for a given 15-minute sampling period was small, good agreement with the theoretical curves was noted, as seen, for example, in Fig. 7. This figure shows the total range of 13 data points for each of the hydrophone spacings, as measured with the array in a horizontal position at a depth of 300 meters during a sea state of approximately 4. Several plots of the average value of the correlation $\pm 1\sigma$, as calculated for sampling periods of 15 minutes, were obtained under various conditions. These plots, along with the corresponding theoretical curves, are shown in Figs. 8 through 13 for the case of horizontal receivers. All plots show a small standard deviation and a fairly good agreement with the predicted values. However, the plots were obtained under a variety of environmental conditions, as labeled. It can be seen that an insufficient amount of data exists for any given set of conditions to warrant further compilation of the data, or to determine any sea state or depth dependence.

The horizontal measurements consumed two-thirds of the time allotted for the experiment; the remaining time was used for vertical measurements. The problems affecting the horizontal data, already discussed, were also a major factor controlling the amount of usable vertical data. Analysis of the plots of correlation values measured in the vertical plane showed not only a large standard deviation but also a definite trend as a function of time. Sometimes, the points were clustered in two distinct groupings.

These additional problems are attributed to the instability of the SP-300 in the horizontal plane, which made it necessary to use the mercury ballast system to maintain a level position during the recording period. Consequently, the only set of data meeting the requirements of the study is presented in Fig. 14. These data are in good agreement with the theoretical curve and previous experimental results; however they represent only one 15-minute sample taken under low sea-state conditions.

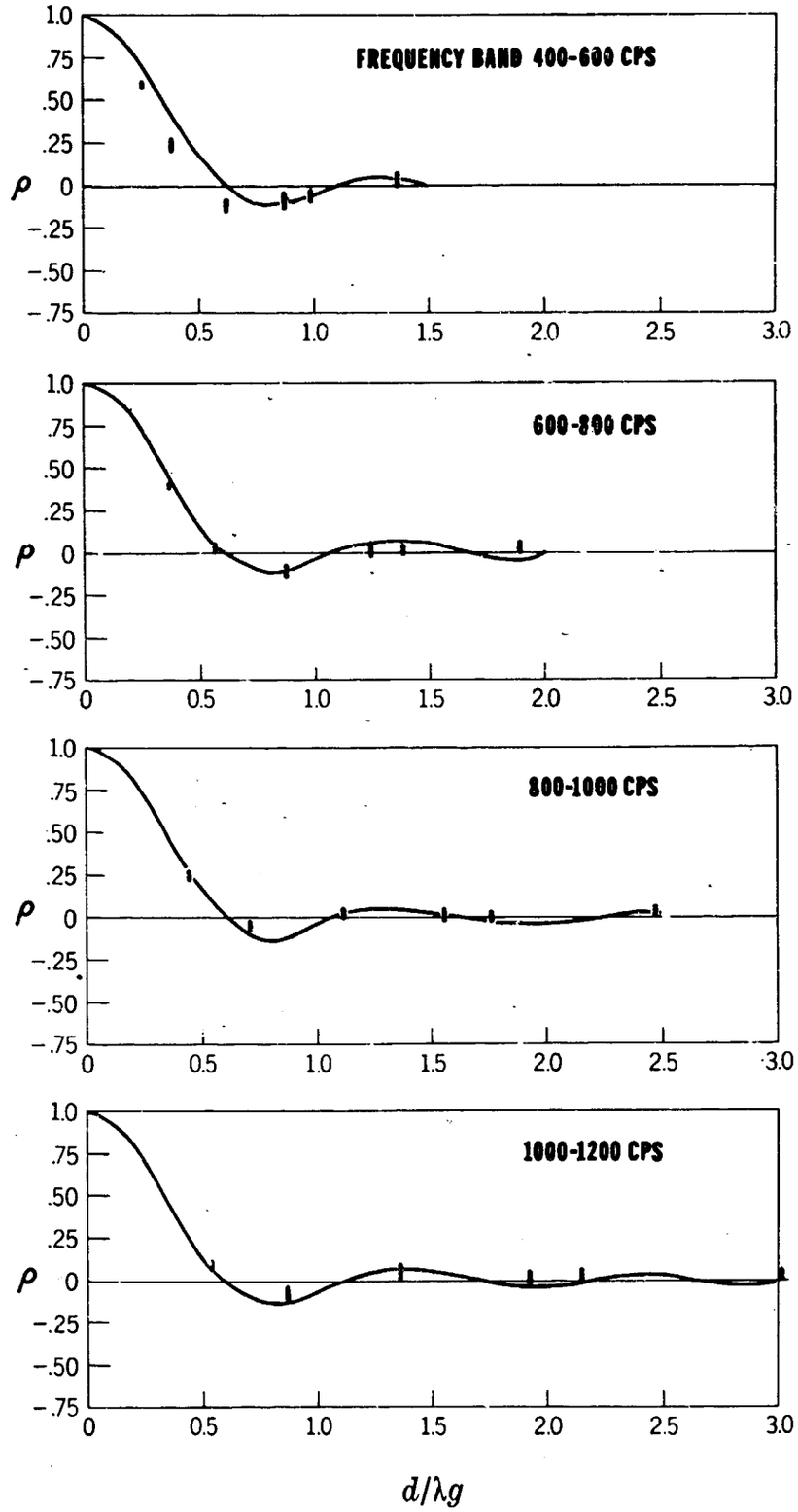

Fig. 7 - Comparison of Experimental Plots for Horizontal Receivers (at a Depth of 300 meters during Sea State 4 on 9 March 1965 at 1328 Hours) with the Theoretical Curves

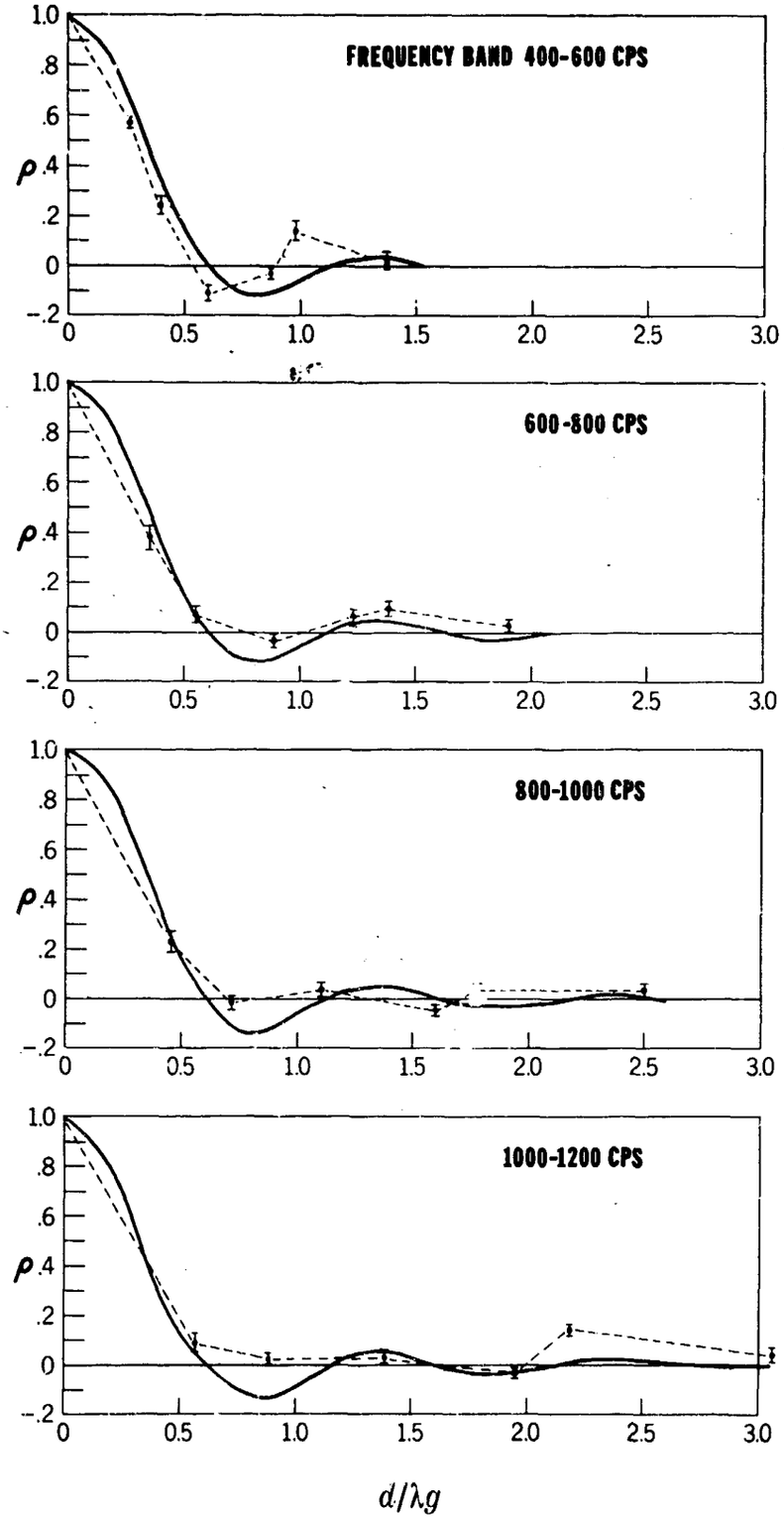

Fig. 8 - Comparison of the Average Values of the Coorelation $\pm 1\sigma$ for Horizontal Receivers (at a Depth of 300 meters during Sea State 1 on 17 March 1965 at 1330 Hours) with the Theoretical Curves

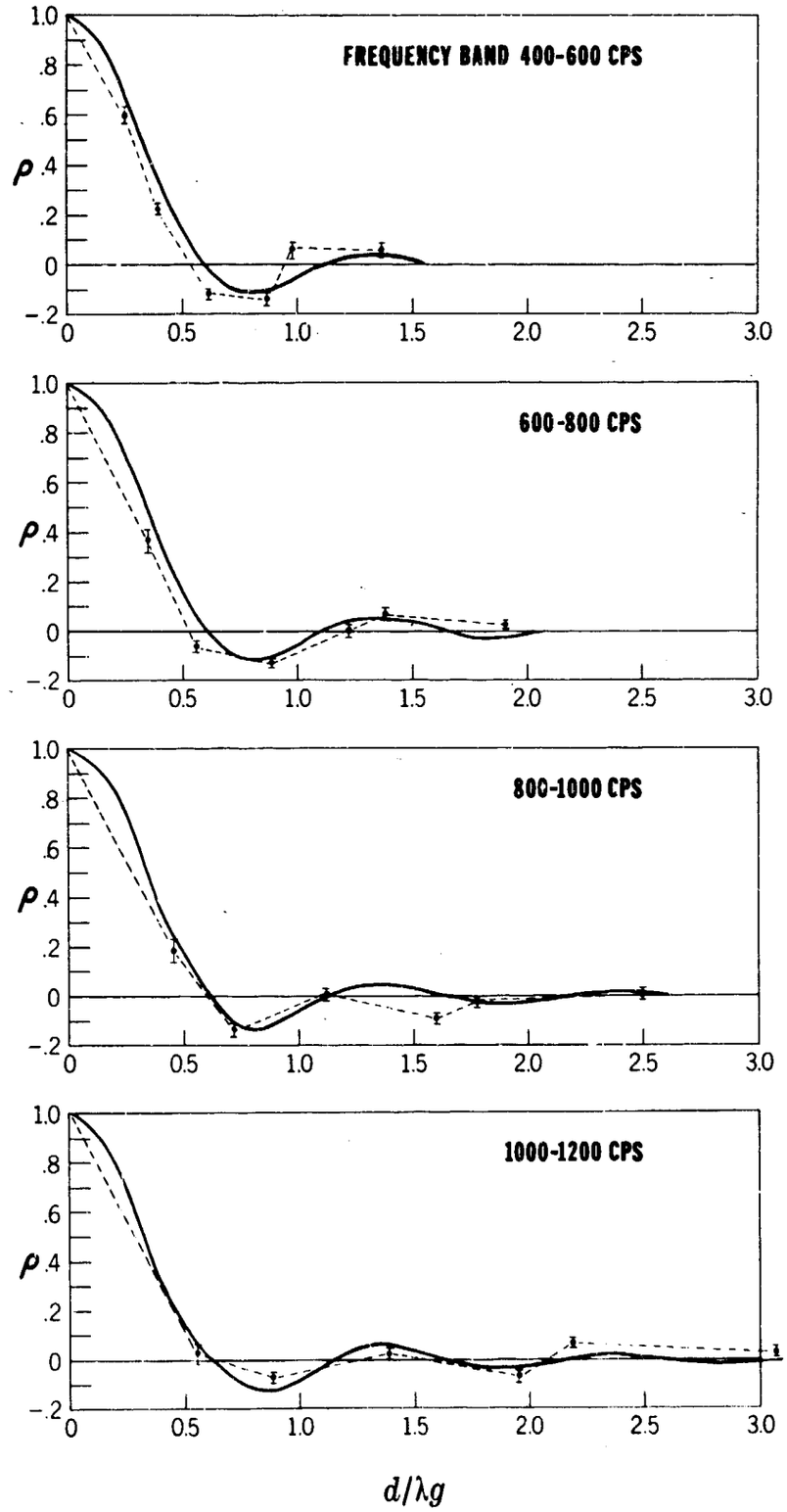

Fig. 9 - Comparison of the Average Values of the Correlation $\pm 1\sigma$ for Horizontal Receivers (at a Depth of 300 meters during Sea State 1 on 17 March 1965 at 1521 Hours) with the Theoretical Curves

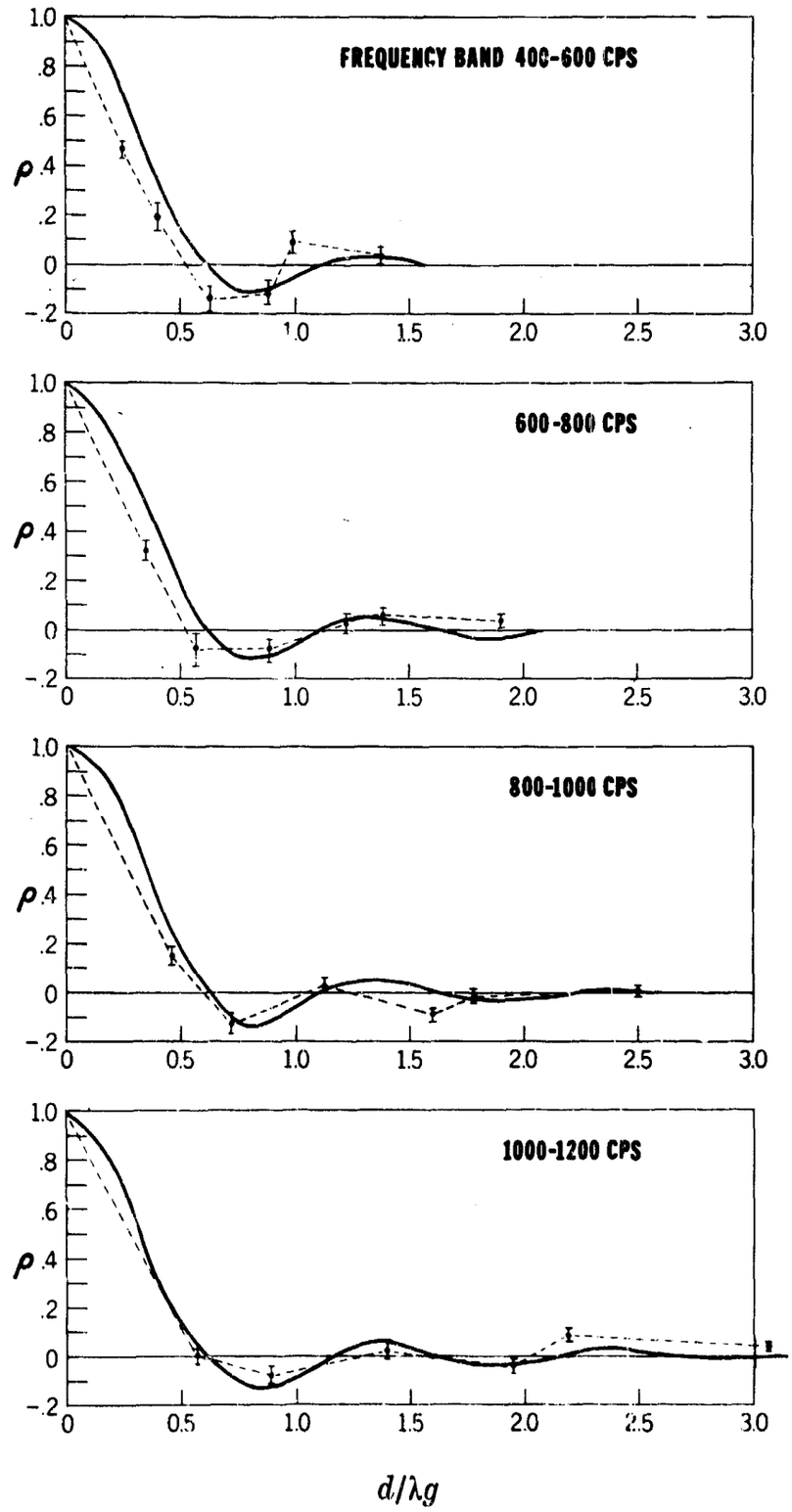

Fig. 10 - Comparison of the Average Values of the Correlation ρ_{10} for Horizontal Receivers (at a Depth of 150 meters during Sea State 1 on 17 March 1965 at 1543 Hours) with the Theoretical Curves

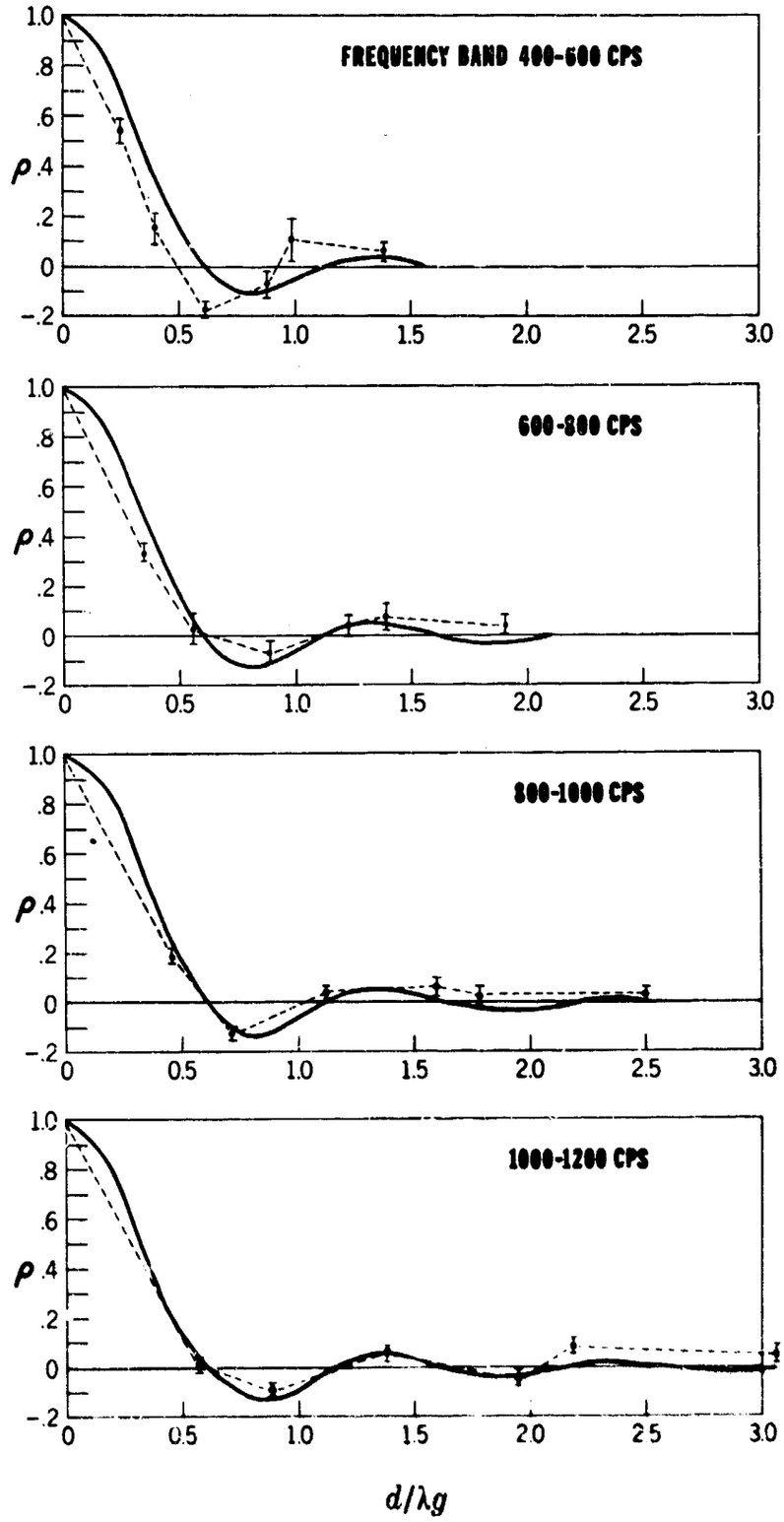

Fig. 11 - Comparison of the Average Values of the Correlation $\pm 1\sigma$ for Horizontal Receivers (at a Depth of 150 meters during Sea State 2 on 18 March 1965 at 1050 Hours) with the Theoretical Curves

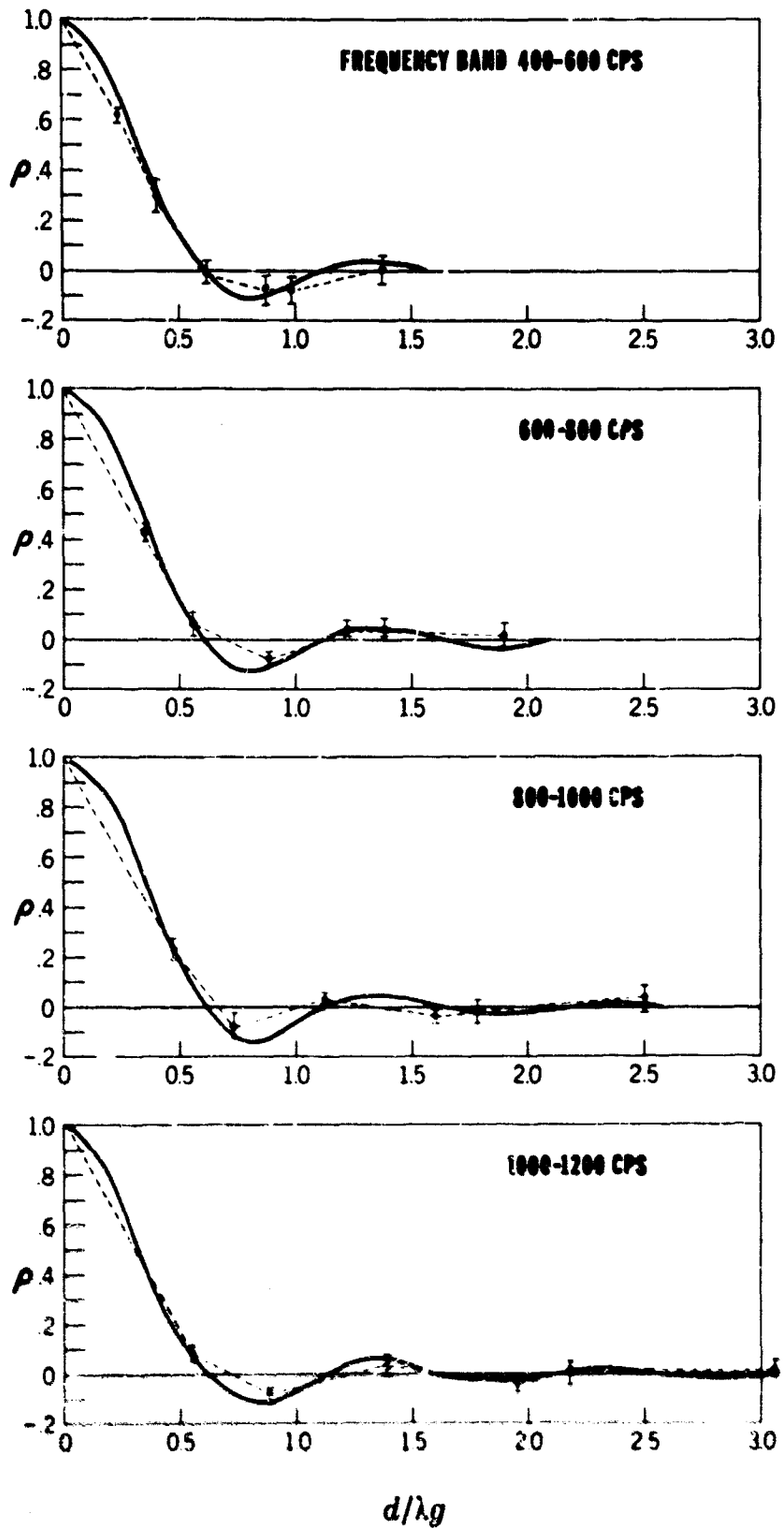

Fig. 12 - Comparison of the Average Values of the Correlation $\pm 1\sigma$ for Horizontal Receivers (at a Depth of 150 meters during Sea State 4 on 9 March 1965 at 1509 Hours) with the Theoretical Curves

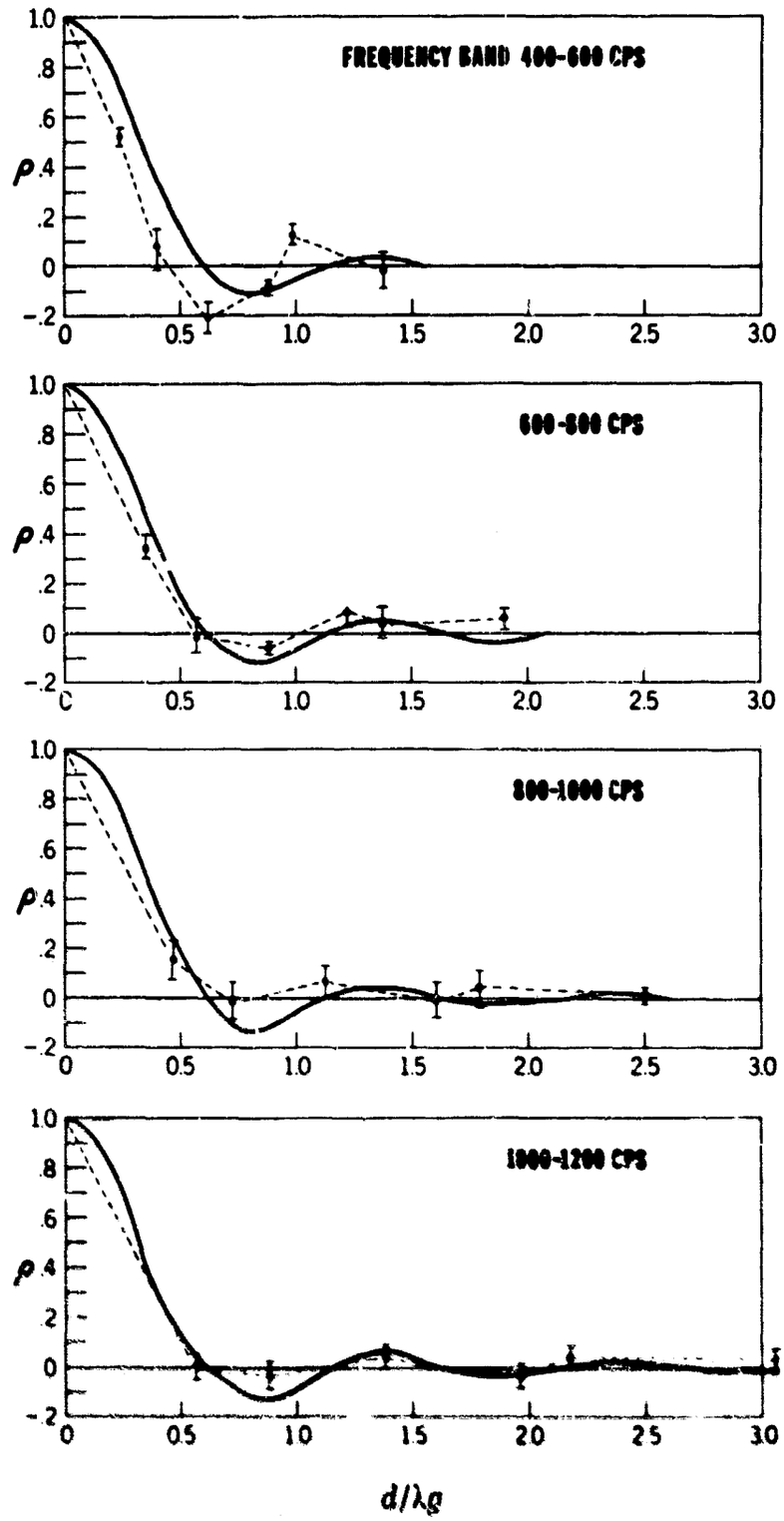

Fig. 13 - Comparison of the Average Values of the Correlation $\pm 1\sigma$ for Horizontal Receivers (at a Depth of 150 meters during Sea State 4 on 9 March 1965 at 1533 Hours) with the Theoretical Curves

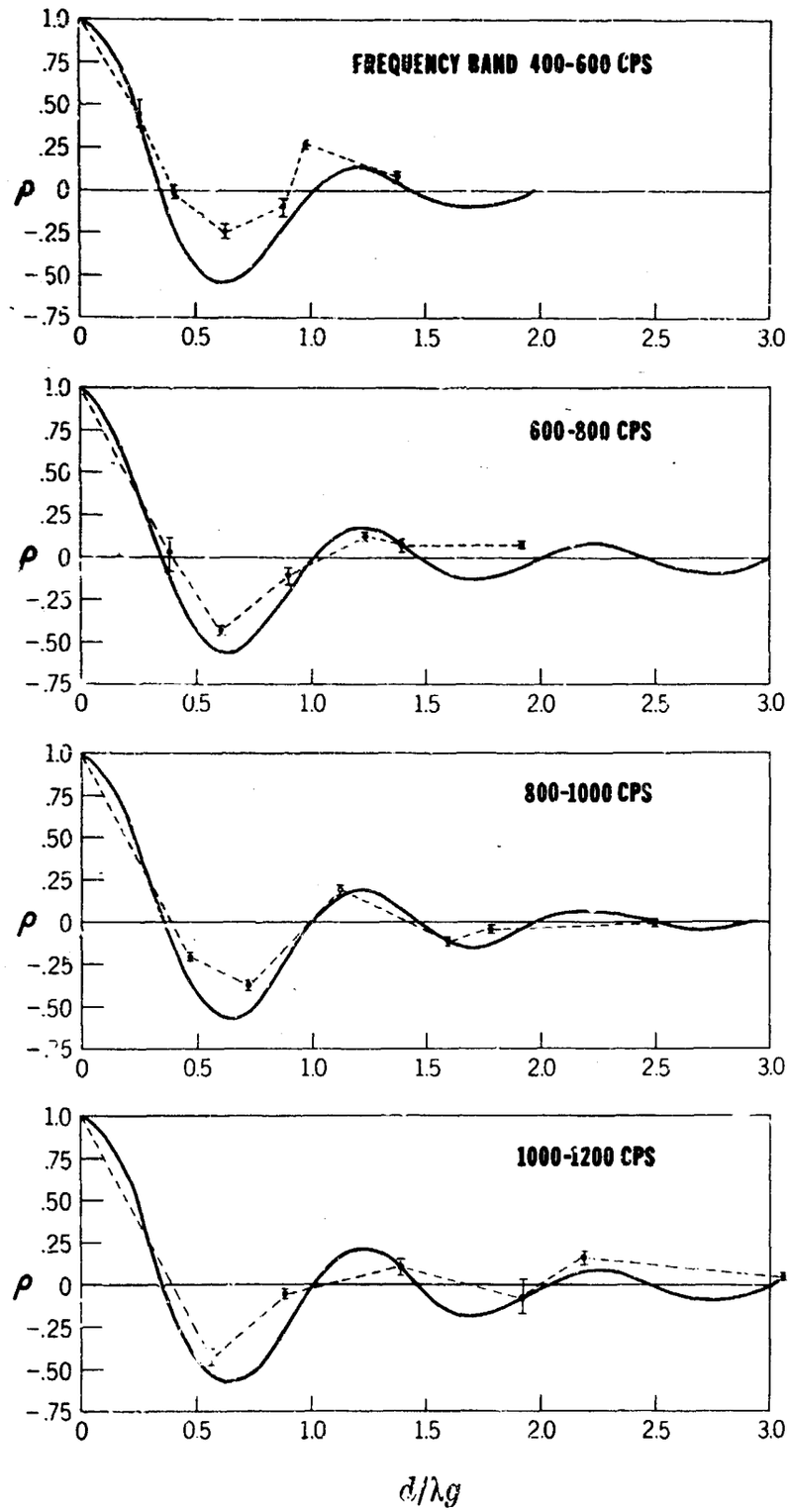

Fig. 14 - Comparison of the Average Values of the Correlation $\pm 1\sigma$ for Vertical Receivers (at a Depth of 150 meters during Sea State 1 on 17 March 1965 at 1500 Hours) with the Theoretical Curves

CONCLUSIONS

Experimental values of the spatial correlation of ambient noise have been obtained using a six-element, geometrically spaced linear array attached to a deep-submergence vehicle, Diving Saucer SP-300. As presented in Figs. 7 through 14, the experimental values obtained are in good agreement with the theoretical curves. Each figure represents the data from one 15-minute recording period and is presented for frequency bands of 400-600, 600-800, 800-1000, and 1000-1200 cps. These measurements were made at depths of 150 and 300 meters, with the linear array positioned in the horizontal as well as the vertical plane, during different sea state conditions.

During the experiment, the maneuvering of the deep-submergence vehicle was kept to a minimum in order to limit interference. However, about 50 percent of the data obtained during the experiment was not analyzed, because it was contaminated, especially at the lower sea states, by extraneous noise sources such as distant shipping and interference from the tending ship; therefore these data did not meet the requirements of this particular study, i.e., surface-generated noise.

These measurements were possible because of the maneuverability of the SP-300 and its ability to place a trained observer in the environment during the tests; thus enabling him to monitor the data acquisition system and to control as well as position the array to take data in both the horizontal and vertical planes at different depths. These tests have shown that the SP-300 is an extremely useful stationary platform for the collection of acoustic data. While stationary, the mechanical and electrical equipment can be secured making the self-noise level of the SP-300 well below ambient sea noise, even at the lowest sea states. However, when the SP-300 is under way, its propulsion machinery produces acoustic levels that limit the type of measurement program that may be conducted. Care must also be exercised with respect to the extraneous acoustic noise that the tending ship may introduce.

AD628938

3ND-USNUSL-29 (REV. 11/63)

U. S. NAVY UNDERWATER SOUND LABORATORY
FORT TRUMBULL, NEW LONDON, CONNECTICUT 06321

IN REPLY REFER TO:
5600
Ser 982-36

15 March 1966

From: Commanding Officer and Director, U. S. Navy Underwater Sound Laboratory, Fort Trumbull, New London, Connecticut 06321
To: Distribution List

Subj: USL Report No. 714, "Measurements of the Spatial Correlation of Ambient Noise Using a Deep-Submergence Vehicle (Diving Saucer SP-300)," by Gerald L. Assard and Beverly C. Hassell; erratum on

1. The attention of addressees is directed to an error on page 1, paragraph 1, line 3 of the subject report.

2. The phrase "cosine directionality pattern" should read "cosine squared directionality pattern."

3. Addressees are requested to make this correction in their copies of the report.

F. H. Hunt
By direction