AFCRL-65-440
JUNE 1965
PHYSICAL SCIENCES RESEARCH PAPERS, NO. 114

AD-620 229

SPACE PHYSICS LABORATORY PROJECT 8608

AIR FORCE CAMBRIDGE RESEARCH LABORATORIES

L. G. HANSCOM FIELD, BEDFORD, MASSACHUSETTS

Distortion of a Magnetic Field by the Motion of a Cylindrical Conductor

JOSEPH G. KELLEY

RONALD S. FINN, 1/LT, USAF

OFFICE OF AEROSPACE RESEARCH
United States Air Force

Abstract

Motion of a conductor relative to a magnetic field distorts the field. This paper considers a cylindrical slug moving in a two-dimensional magnetic field, represented by the vector potential $A_0 \hat{\theta}$, where $\partial A_0/\partial \theta = 0$. Maxwell's equations are solved for the distorted potential $A \hat{\theta}$ in the form of a rapidly converging series $A = \sum A_n$. The A_n's are given in a form suitable for evaluation by a digital computer. The nonequivalence of the apparently analogous problem of a stationary slug in a time-varying field is noted and discussed.

Contents

1. INTRODUCTION 1
   - 1.1 Background 1
   - 1.2 Problem 1
   - 1.3 Method of Solution 3
2. SOLUTION 3
   - 2.1 Mathematical Expression of Problem 3
   - 2.2 Functions to be Used 6
   - 2.3 Solution 10
3. CONCLUSIONS 13

ACKNOWLEDGMENTS 15

REFERENCES 15

APPENDIX A A1

Illustrations

1. Geometry of Problem 2
2. A Plot of the Function $f(x_n) = x_n^{-1/2} [(2 - x_n) K_n - 2 E_n]$ vs. x_n 8

3. Curves which Map the $\hat{\theta}$ Component of the Vector Potential $a_0(x_0)$ Due to Unit Current Flowing in a Loop of Unit Radius 9

4. $A_1(2\pi/\alpha)$, $A_2(2\pi/\alpha)^2$, and $A_3(2\pi/\alpha)^3$ as Functions of Slug Position for a Slug of Radius b = 0.67, and Length ℓ = 3.33 14

Distortion of a Magnetic Field By the Motion of a Cylindrical Conductor

1. INTRODUCTION

1.1 Background

By Faraday's law a change of the magnetic field in a conducting slug induces currents in that slug. This change may be either time variation of the field on a stationary slug or motion of the slug in a constant field. By Ampere's law these currents produce an induced magnetic field which perturbs the original field. Such distortions have been used to measure the conductivity of various moving (Lin, Resler and Kantrowitz, 1955) and stationary (Chambers and Park, 1961) slugs. Theoretical analysis has been limited to a rectangular slug in a one-dimensional field (Oddson, 1963). These devices have been calibrated by measuring slugs of known conductivity. However, some phenomena, such as skin effect, which were not a problem in these cases, can be difficult to duplicate in the calibrating slugs. To extrapolate the calibration to these cases, one must solve the problem for a cylindrical slug in a two-dimensional field.

1.2 Problem

Consider an initial field represented by the vector potential $A_0 \hat{\theta}$ with the condition that $\partial A_0/\partial \theta = 0$. A cylindrical slug of radius b, length 2ℓ, and

(Received for publication 6 April 1965)

conductivity σ, moves into this field at velocity v. (Figure 1.) The slug's midpoint is at position $z = vt$ at time t. What perturbation in A will be caused as a result of this motion? Since this problem involves spatial variations of the field, it will be referred to as the Space Case or Space. Consider also the problem of an identical but stationary slug with its midpoint at the point z_0 = const. in an initial field represented by the vector potential A_0 (t) $\hat{\theta}$. Again with the condition that $\partial A_0/\partial \theta = 0$. What perturbation in A will be caused as a result of this time variation of the initial field? Since this problem involves temporal variations of the field, it will be referred to as the Time Case or Time.

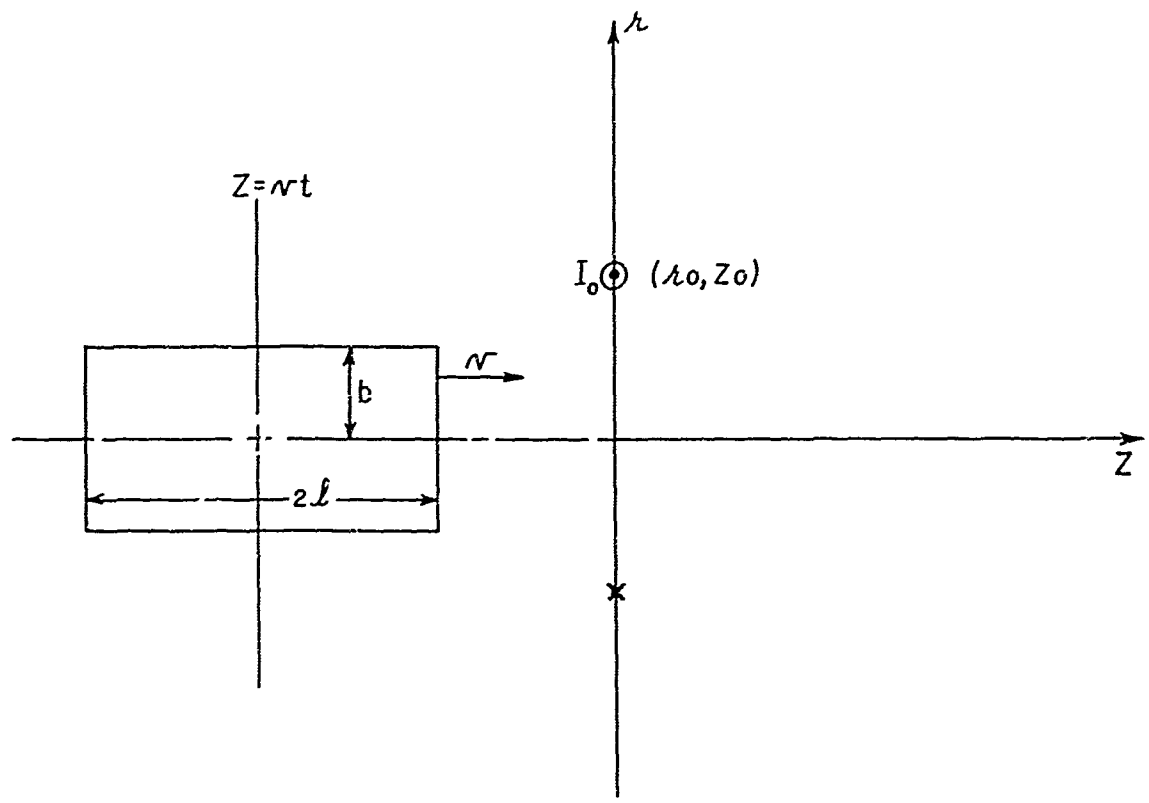

Figure 1. Geometry of Problem. A cylindrical slug of Length 2ℓ and radius b moves along the z axis with velocity v. At time t the midpoint of the slug is at the point where $z = vt$. A current I_0 flows in a single turn loop at $r_0, z_0 = 0$

For the purpose of this discussion let A_0 be created by current I_0 flowing in the loop at r_0, $z_0 = 0$. More complex fields of this symmetry may be represented by a number of such loops.

1.3 Method of Solution

The symmetries postulated above allow one to reduce Maxwell's equations for moving media to one scalar differential equation for A, where A is the vector potential for the total magnetic field, both initial and induced. Let A equal $\sum A_n$ where A_n is the nth order perturbation. Then, by physical reasoning, A_0 generates first order eddy currents I_1 which create the first order perturbing field A_1. Similarly potential A_1 generates currents I_2 which create potential A_2, and so on. This can be carried to as many orders as accuracy requires. Rationalized mks units will be used initially. Later all quantities will be made dimensionless.

2. SOLUTION

2.1 Mathematical Expression of Problem

Consider Maxwell's equations for moving media (Panofsky and Phillips, 1955).

$$\underline{\nabla} \cdot \underline{E} = 0$$

$$\underline{\nabla} \cdot \underline{B} = 0$$

$$\underline{\nabla} \times \underline{B} = \mu_0 \underline{j}_0 + \mu_0 \sigma \underline{E} + \mu_0 \sigma \underline{v} \times \underline{B} + \mu_0 \epsilon_0 (\partial \underline{E}/\partial t) \qquad \text{(Space)}$$

$$\underline{\nabla} \times \underline{B} = \mu_0 \underline{j}_0 + \mu_0 \sigma \underline{E} + \mu_0 \epsilon_0 (\partial \underline{E}/\partial t) \qquad \text{(Time)}$$

$$\underline{\nabla} \times \underline{E} = -\partial \underline{B}/\partial t \qquad (1)$$

$\underline{j}_0$ is the current density which produces the initial field.
σ is the conductivity of the medium.
$\underline{v}$ is the velocity of the medium relative to the fields.

Charges, both true and those due to polarization, are assumed to be nonexistent. The velocity of the medium is much less than the velocity of light. Maxwell's equations outside of the medium are obtained, if the velocity and conductivity are set equal to zero.

The fields may be expressed by the vector potential $\underline{A}$.

$$\underline{E} = -\partial \underline{A}/\partial t$$
$$\underline{B} = \underline{\nabla} \times \underline{A}. \qquad (2)$$

Combining Eq. (2) and Eq. (1), one finds that

$$\underline{\nabla} \times (\underline{\nabla} \times \underline{A}) = \mu_0 \underline{j}_0 - \mu_0 \sigma (\partial \underline{A}/\partial t) + \mu_0 \sigma \underline{v} \times (\underline{\nabla} \times \underline{A}) - \mu_0 \epsilon_0 (\partial^2 \underline{A}/\partial t^2) \quad \text{(Space)}$$

$$\underline{\nabla} \times (\underline{\nabla} \times \underline{A}) = \mu_0 \underline{j}_0 - \mu_0 \sigma (\partial \underline{A}/\partial t) - \mu_0 \epsilon_0 (\partial^2 \underline{A}/\partial t^2). \quad \text{(Time)} \quad (3)$$

For this problem, the vectors have the following forms:

$$\underline{j}_0 = j_0 \hat{\theta} \quad (4a)$$

$$\underline{v} = v \hat{k} \quad (4b)$$

$$\underline{B} = B_r \hat{r} + B_z \hat{k} \quad (4c)$$

$$\underline{E} = E \hat{\theta} \quad (4d)$$

due to the symmetries postulated above.
From Eqs. (2), (4c) and (4d), it follows that

$$\underline{A} = A \hat{\theta} \quad (5)$$

since it has been assumed that

$$\partial \underline{E}/\partial \theta = \partial \underline{B}/\partial \theta = 0 \quad (6)$$

then

$$\partial \underline{A}/\partial \theta = 0. \quad (7)$$

From these considerations it can be shown that only the $\hat{\theta}$ component of Eq. (3) is important.

$$(\partial/\partial r)\left[r^{-1} (\partial/\partial r)(r A)\right] + (\partial^2 A/\partial z^2) = -\mu_0 j_0 + \mu_0 \sigma v (\partial A/\partial z) + \mu_0 \sigma (\partial A/\partial t) + \mu_0 \epsilon_0 (\partial^2 A/\partial t^2) \quad \text{(Space)}$$

$$(\partial/\partial r)\left[r^{-1} (\partial/\partial r)(r A)\right] + (\partial^2 A/\partial z^2) = -\mu_0 j_0 + \mu_0 \sigma (\partial A/\partial t) + \mu_0 \epsilon_0 (\partial^2 A/\partial t^2) \quad \text{(Time)} \quad (8)$$

Note that $\mu_0 \epsilon_0 = c^{-2}$, where c is the velocity of light. The term $(\partial^2 A/\partial z^2)$ is of the same order as $v^{-2} (\partial^2 A/\partial t^2)$ (Space) or $\omega_0^{-2} r^{-2} (\partial^2 A/\partial t^2)$ (Time). The frequency ω_0 is some fundamental frequency of the Time Case so chosen that $\omega_0 r_0$ (Time) is on the order of v (Space). Thus the term $\mu_0 \epsilon_0 (\partial^2 A/\partial t^2)$ ~ $(v/c)^2 v^{-2} (\partial^2 A/\partial t^2)$ (Space) = $(\omega_0 r_0/c)^2 \omega_0^{-2} r_0^{-2} (\partial^2 A/\partial t^2)$ (Time) may be omitted.

This makes Eq. (8) a diffusion equation. Since physically this is a diffusion problem, the approximation is valid.

All quantities will now be made dimensionless as follows: Choose a characteristic current I_0 and a characteristic length r_0. Multiply each term in Eq. (8) by $r_0^2 (\mu_0 I_0)^{-1}$. Substitute dimensionless terms for the resulting ratios as indicated in Table 1. For the remainder of this paper only these dimensionless terms will be used. The dimensionless equivalent of Eq. (8) is

$$(\partial/\partial r) \left[r^{-1} (\partial/\partial r)(r A) \right] + (\partial^2 A/\partial z^2)$$

$$= -j_0 + \alpha \left[(\partial A/\partial z) + (\partial A/\partial t) \right] \qquad \text{(Space)}$$

$$= -j_0 + \alpha \left[\partial A/\partial t \right]. \qquad \text{(Time)} \quad (9)$$

Table 1. Relationship Between the Ratios of Quantities in mks Units and the New Dimensionless Quantities

Ratios	Dimensionless Quantities
r/r_0	r
z/r_0	z
vt/r_0 (Space) $\omega_0 t$ (Time)	t
$A (\mu_0 I_0)^{-1}$	A
$j_0 r_0^2/I_0$	j_0
b/r_0	b
ℓ/r_0	ℓ
r_0/r_0	1

Table 1. Relationship Between the Ratios of Quantities in mks Units and the New Dimensionless Quantities (Cont)

Ratios	Dimensionless Quantities
z_0/r_0	z_0
$\mu_0 \sigma v r_0$ (Space) $\mu_0 \sigma \omega_0 r_0^2$ (Time)	α

2.2 Functions to be Used

Consider first the potential a_n due to a current I_n in a loop r_n, z_n. The current density j_n is given by

$$j_n = I_n \delta (z - z_n) \delta (r - r_n). \tag{10}$$

The Dirac delta, $\delta (y - y_m)$, is defined by Eq. (11).

$$\int_{y_1}^{y_2} \delta (y - y_m) \, d y = 1 \qquad y_1 \leq y_m \leq y_2$$
$$= 0 \qquad \text{otherwise}$$

$$\int_{y_1}^{y_2} g (y) \delta (y - y_m) \, d y = g (y_m) \qquad y_1 \leq y_m \leq y_2$$
$$= 0 \qquad \text{otherwise.} \tag{11}$$

The potential is given by (Stratton, 1941)

$$a_n = (2\pi)^{-i} I_n (r_n/r)^{1/2} f (x_n). \tag{12}$$

The following definitions are required:

$$x_n = 4 r_n r \left[(r_n + r)^2 + (z - z_n)^2 \right]^{-1}$$
$$f (x_n) = x_n^{-1/2} \left[(2 - x_n) K_n - 2 E_n \right]$$
$$K_n = \int_0^{\pi/2} \left[1 - x_n \sin^2 \phi \right]^{-1/2} d \phi$$
$$E_n = \int_0^{\pi/2} \left[1 - x_n \sin^2 \phi \right]^{1/2} d \phi \tag{13}$$

K_n and E_n are the complete elliptic integrals of the first and second kinds (Jahnke and Emde, 1945). The function $f(x_n)$ is shown in Figure 2; $a_0(r_o, z_o)$ is mapped in Figure 3.

Azimuthal currents in a solid may be regarded as a continuous distribution of such rings. To obtain the potential due to such currents, one must integrate over all such rings and divide by an appropriate normalizing factor. Thus,

$$A_n(r, z) = \frac{\int_0^b \int_{t-\ell}^{t+\ell} a_n \, dz_n \, dr_n}{z\, b\, \ell} \qquad \text{(Space)}$$

$$= \frac{\int_0^b \int_{z_0-\ell}^{z_0+\ell} a_n \, dz_n \, dr_n}{z\, b\, \ell} . \qquad \text{(Time)} \quad (14)$$

It should be noted that

$$I_n = I_n(r_n, z_n). \qquad (15)$$

Since the normalizing factor will later cancel, large values of ℓ present no problem. Note that n refers to the nth-order perturbation. The rings are not discrete and therefore are not numbered

One more function is needed. We define $A_{n,\, n-1}$ to be the function A_{n-1} with r_n, z_n substituted for r, z. Similar definitions may be formed for $x_{n,\, n-1}$, $K_{n,\, n-1}$, and $E_{n,\, n-1}$. $a_{n,\, n-1}$ is the potential at r_n, z_n due to a current I_{n-1} in the loop at r_{n-1} z_{n-1}.

Since a_n is the potential of a current loop, it must satisfy an equation similar to Eq. (9) except $\alpha = 0$.

$$(\partial/\partial r)\left[r^{-1} (\partial/\partial r)(r\, a_n)\right] + (\partial^2 a_n/\partial z^2) = -I_n\, \delta(r - r_n)\, \delta(z - z_n). \qquad (16)$$

Since a differential with respect to r is unaffected by integration over r_n, Eqs. (14) and (16) show that

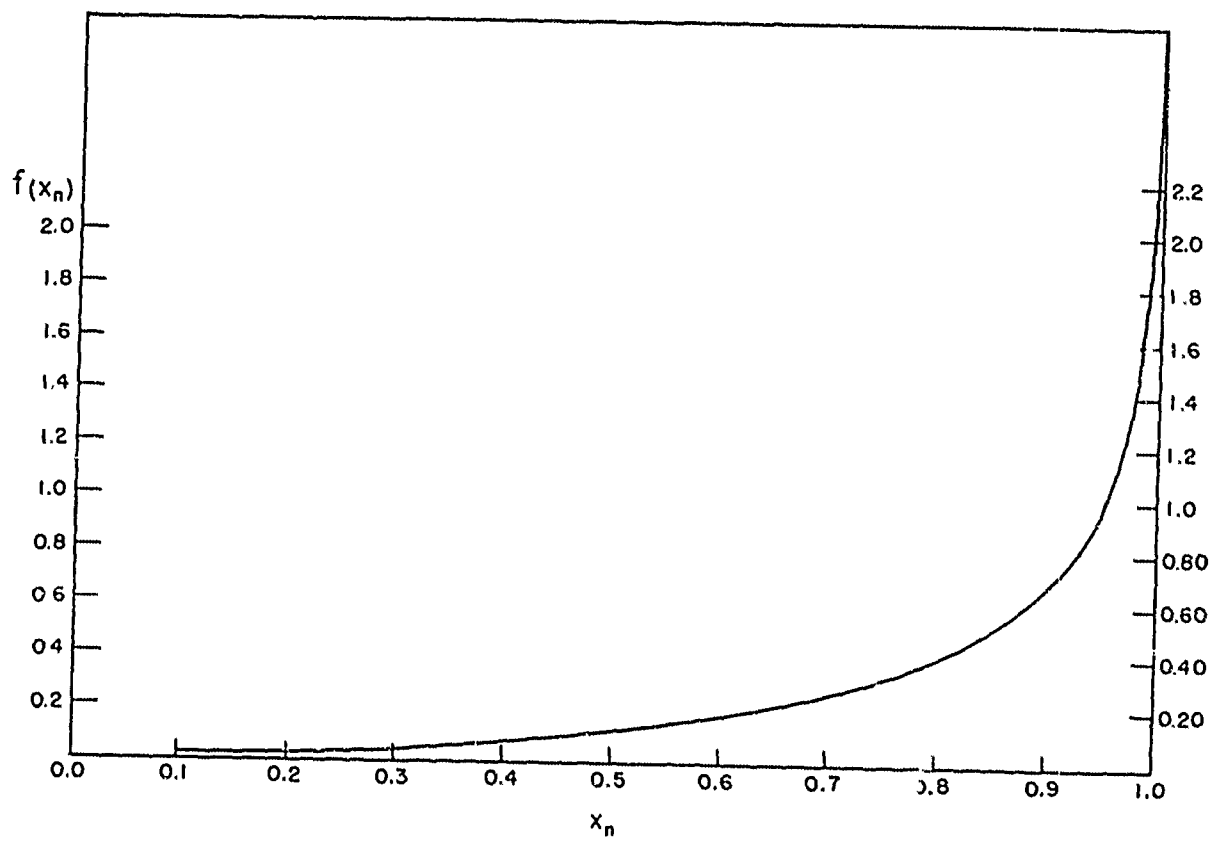

Figure 2. A Plot of the Function $f(x_n) = x_n^{-1/2} [(2 - x_n) K_n - 2 E_n]$ vs. x_n. The complete elliptic integrals K_n and E_n are defined: $K_n = \int_0^{\pi/2} [1 - x_n \sin^2 \phi]^{-1/2} \, d\phi$ $E_n = \int_0^{\pi/2} [1 - x_n \sin^2 \phi]^{1/2} \, d\phi$

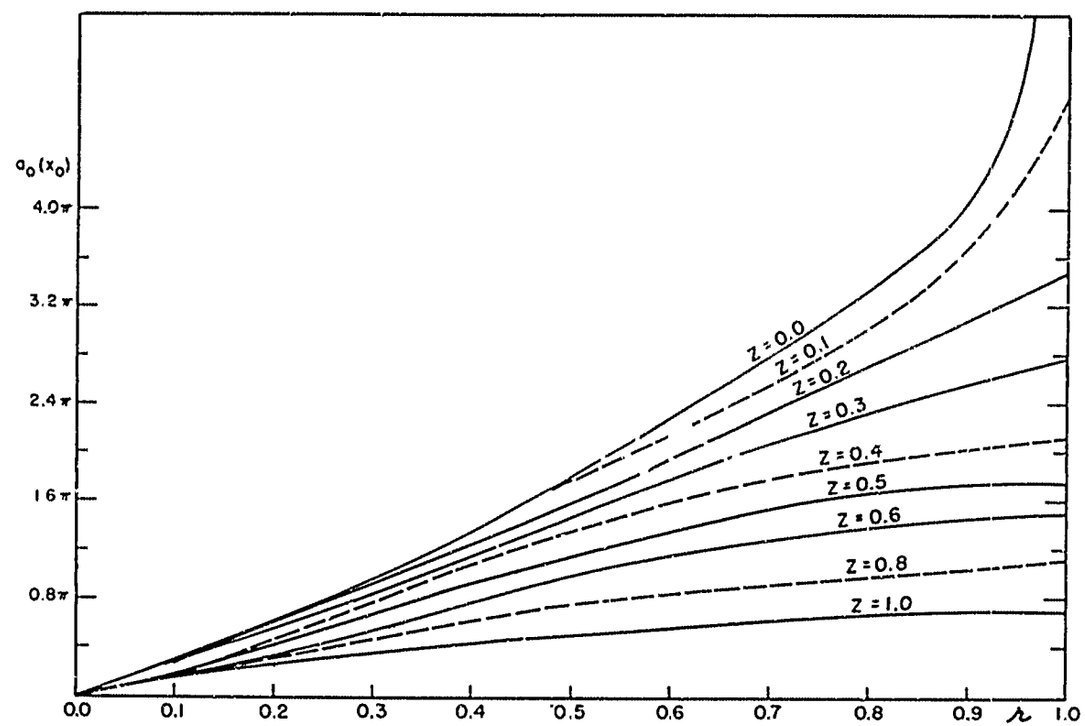

Figure 3. Curves which Map the $\hat{\theta}$ Component of the Vector Potential a_0 (x_0) Due to Unit Current Flowing in a Loop of Unit Radius. The potential is mapped as a function of distance r from the axis at various points z along the axis

$$(\partial/\partial r)\left[r^{-1}(\partial/\partial r)(r A_n)\right] + (\partial^2 A_n/\partial z^2)$$

$$= -(2b\ell)^{-1}\int_0^b\int_{t-\ell}^{t+\ell} I_n(r_n, z_n)\,\delta(r - r_n)\,\delta(z - z_n)\,dz_n\,dr_n \qquad \text{(Space)}$$

$$= -(2b\ell)^{-1}\int_0^b\int_{z_0-\ell}^{z_0+\ell} I_n(r_n, z_n)\,\delta(r - r_n)\,\delta(z - z_n)\,dz_n\,dr_n \text{(Time)} \quad (17)$$

Using the definition of $\delta(y - y_m)$ in Eq. (11), one may show that

$$(\partial/\partial r)\left[r^{-1}(\partial/\partial r)(r A_n)\right] + (\partial^2 A_n/\partial z^2)$$

$$= -(2b\ell)^{-1} I_n(r, z) \quad r \leq b,\ t - \ell \leq z \leq t + \ell \qquad \text{(Space)}$$

$$z_0 - \ell \leq z \leq z_0 + \ell \qquad \text{(Time)}$$

$$= 0 \qquad \text{otherwise.} \qquad (18)$$

2.3 Solution

Let the solution to Eq. (9) be

$$A = \sum A_n. \qquad (19)$$

The A_n's will now be evaluated.
Outside of the slug, Eq. (9) becomes

$$(\partial/\partial r)\left[r^{-1}(\partial/\partial r)(r A)\right] + (\partial^2 A/\partial z^2) = -j_0. \qquad (20)$$

If Eq. (19) is used to substitute for A on the left-hand side of Eq. (20), the A_0 term will contribute $-j_0$ to the right-hand side and the other A_n's will contribute nothing to the right-hand side and the solution is obviously valid. Inside the slug Eq. (9) can be satisfied in the same manner if

$$\alpha\left[(\partial A/\partial z) + (\partial A/\partial t)\right] = -(2b\ell)^{-1}\sum_{n=1}^{\infty} I_n(r, z). \qquad (21)$$

If Eq. (19) is now used to replace A on the left-hand side of Eq. (21)

$$(-2b\ell)^{-1} \sum_{n=1}^{\infty} I_n(r, z) =$$

$$\alpha \sum_{n=1}^{\infty} [(\partial A_{n-1}/\partial z) + (\partial A_{n-1}/\partial t)] \qquad \text{(Space)}$$

$$\alpha \sum_{n=1}^{\infty} [\partial A_{n-1}/\partial t]. \qquad \text{(Time) (22)}$$

Replacing r, z by r_n, z_n and equating these two series term by term

$$I_n(r_n, z_n) = -2\alpha b\ell[(\partial A_{n,\,n-1}/\partial z_n) + (\partial A_{n,\,n-1}/\partial t)] \qquad \text{(Space)}$$

$$= -2\alpha b\ell[\partial A_{n,\,n-1}/\partial t]. \qquad \text{(Time) (23)}$$

When this is substituted into Eq. (12) and the result substituted into Eq. (14)

$$A_n = -(2\pi)^{-1}\alpha \int_0^b \int_{t-\ell}^{t+\ell} (r_n/r)^{1/2} [(\partial A_{n,\,n-1}/\partial z_n) + (\partial A_{n,\,n-1}/\partial t)] \qquad \text{(Space)}$$

$$f(x_n)\, dz_n\, dr_n$$

$$= -(2\pi)^{-1}\alpha \int_0^b \int_{z_0-\ell}^{z_0+\ell} (r_n/r)^{1/2} [\partial A_{n,\,n-1}/\partial t]\, f(x_n)\, dz_n\, dr_n. \text{(Time) (24)}$$

An important difference in the two cases may now be noted. In the Time Case only $A_{n,\,n-1}$ is time dependent. Equation (24) may be simplified by taking the time derivative outside the integral.

$$A_n = (\partial/\partial t)(-2\pi)^{-1}\alpha \int_0^b \int_{z_0-\ell}^{z_0+\ell} A_{n,\,n-1}\, f(x_n)\, dz_n\, dr_n. \qquad \text{(Time) (25t)}$$

An iteration process will now yield

$$A_n = (\partial^n/\partial t^n)\,(-2\pi)^{-n}\,\alpha^n \int_0^b \int_0^b \cdots \int_0^b \int_{z_0-\ell}^{z_0+\ell} \cdots \int_{z_0-\ell}^{z_0+\ell}$$

$$A_{1,0}\, f(x_1)\, f(x_2) \ldots f(x_n)\, dz_1 \ldots dz_n\, dr_1\, dr_2 \ldots dr_n . \qquad \text{(Time)} \quad (26t)$$

Usually the time dependence of the initial field can be separated $A_{1,0} = A'_{1,0}\,(r,z)\, g_{1,0}(t)$ to yield

$$A_n = (\partial^n g/\partial t^n)\,(-2\pi)^{-n}\,\alpha^n \int_0^b \cdots \int_0^b \int_{z_0-\ell}^{z_0+\ell} \cdots \int_{z_0-\ell}^{z_0+\ell}$$

$$A'_{1,0}\, f(x_1) \ldots f(x_n)\, dz_1 \ldots dz_n\, dr_1 \ldots dr_n . \qquad \text{(Time)} \quad (27t)$$

If $g_{1,0}(t) = e^{it}$ then

$$A_n = (-i/2\pi)^n\,\alpha^n\, e^{it} \int_0^b \cdots \int_0^b \int_{z_0-\ell}^{z_0+\ell} \cdots \int_{z_0-\ell}^{z_0+\ell}$$

$$A'_{1,0}\, f(x_1) \ldots f(x_n)\, dz_1 \ldots dz_n\, dr_1 \ldots dr_n . \qquad \text{(Time)} \quad (28t)$$

Thus each A_n is cos t or sin t times an amplitude.

In the Space Case such a simplification is not possible. There are z and t dependent terms in the integral and in the limits which are not to be differentiated. As will be seen below, the successive A_n differ by more than simple phase shifts. However, the differential equation (Eq. (9)) has been changed to an infinite number of integral equations (Eqs. (19) and (24)). The nth equation corresponds to the nth perturbation. A_0 is the initial field; A_1 is the induced field; A_2 is the first order skin effect; and so on.

$$A_0 = (2\pi)^{-1}\, r^{-1/2}\, f(x_0)$$

$$A_1 = -(2\pi)^{-1}\,\alpha \int_0^b \int_{t-\ell}^{t+\ell} (r_1/r)^{1/2}\, [\partial A_{1,0}/\partial z_1]\, f(x_1)\, dz_1\, dr_1 \qquad \text{(Space)} \quad (25s)$$

$$A_2 = -(2\pi)^{-1}\,\alpha \int_0^b \int_{t-\ell}^{t+\ell} (r_2/r)^{1/2}\, [(\partial A_{2,1}/\partial z_2) + (\partial A_{2,1}/\partial t)]\, f(x_2)\, dz_2\, dr_2$$

A Fortran program for the IBM 7090 has been written to evaluate A_n $(2\pi/\alpha)^n$ (n = 1, 2, 3) at r = 1, z = 0. Slug length and radius are variable inputs for this program. Typical results are shown in Figure 4. As long as $\alpha < 2\pi$ the approximation

$$A = A_0 + A_1 + A_2 + A_3 \qquad \text{(Space) (26s)}$$

seems valid.

3. CONCLUSIONS

The solution as presented in Eq. (25) allows one to calculate the perturbed field around a cylindrical slug moving in a magnetic field. While Eq. (25) is based on the assumption of the A_0 given there, it is easily extended to certain other cases. Any other initial field which has azimuthal independence and has no azimuthal component may be accommodated by suitably changing A_0. In practice this would be a solenoid or some approximation thereof. If the initial field, hence A_0 is time dependent, a time derivative must be included in the equation for A_1.

$$A_1 = (2\pi)^{-1} \alpha \int_0^b \int_{t-\ell}^{t+\ell} (r_1/r)^{1/2} \left[(\partial A_{1,0}/\partial z_1) + (\partial A_{1,0}/\partial t) \right] f(x_1)\, dz_1\, dr_1 . \qquad \text{(Space) (27s)}$$

It is possible now to look back and study the difference between the Space Case and the Time Case. The difference first occurs in Eq. (1) where a $\underline{v} \times \underline{B}$ term is added to the electric field in the Space Case. While it appears that one could easily modify the electric field to accommodate this term, in Eq. (8) this term gives rise to a z derivative of the potential. In Eq. (14) the difference in these two cases by the inclusion of the variable t in the limits of the integral is the Space Case. Comparing the Space solution in Figure 4 with the Time solution in Eq. (27t) shows that two cases, which were apparently analogous in Eq. (1), actually have little or nothing in common. The Time Case solution is the sum of a number of sinusoidal waves of phase 0, $\pm\pi/2$, and π. The Space Case solution is the sum of some definitely nonsinusoidal functions of no simple phase relation.

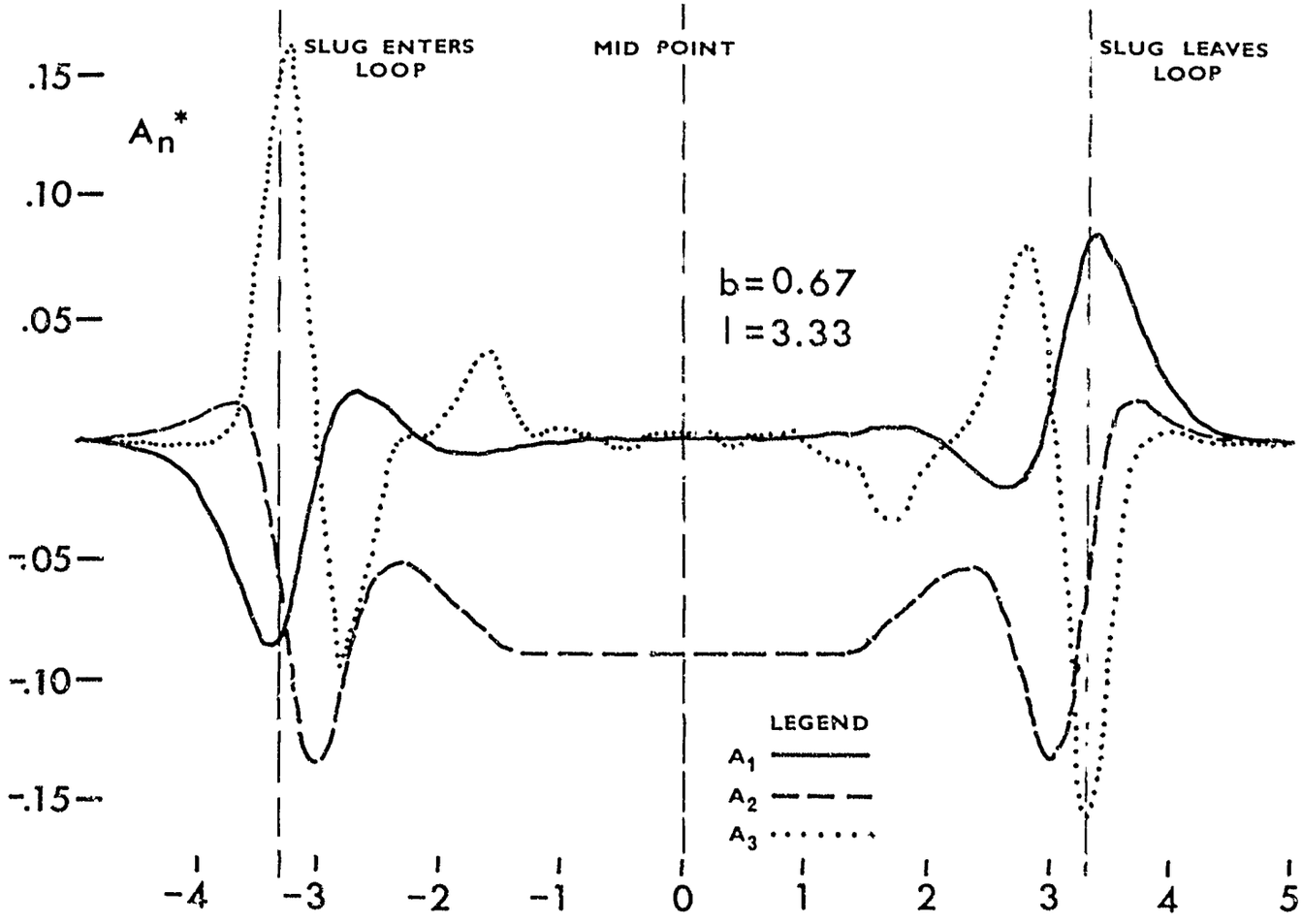

Figure 4. $A_1\ (2\pi/\alpha)$, $A_2\ (2\pi/\alpha)^2$, and $A_3\ (2\pi/\alpha)^3$ as Functions of Slug Position for a Slug of Radius b = 0.67, and Length ℓ = 3.33

Acknowledgments

The authors wish to thank Dr. Pradip Bakshi, Mr. Morton Levine, and Dr. Balram Prasad for many helpful discussions. Acknowledgment is also due Mr. Milan Dabcovich, who programmed the problem for the computer. We are indebted to Mr. Ted Sizemore and Mr. Rodell Proia who performed many of the hand computations involved.

References

Chambers, R. G. and Park, J. G. (1961) Brit. J. Appl. Phys. 12:507.

Jahnke, E. and Emde, F. (1945) Tables of Functions, Dover Publications, New York, 1945, Fourth Ed., Chap. V, p. 73.

Lin, S. C., Resler, E. L., and Kantrowitz, A. (1955) J. Appl. Phys. 26:95.

Oddson, J. K. (1963) J. Appl. Phys. 34:2097.

Panofsky, W. K. H. and Phillips, M. (1955) Classical Electricity and Magnetism, Addison-Wesley, Cambridge, Massachusetts, Chap. 9, p. 147.

Stratton, J. A. (1941) Electromagnetic Theory, McGraw-Hill, New York, First Ed., Chap. IV, p. 263.

BLANK PAGE

Appendix A

Singularities

Before a computer can be used to solve Eq. (25), the singular points must be considered. Otherwise the computer may try to evaluate infinity. In Eq. (12), it will be noted that a_n depends on $(r\,x_n)^{-1/2}$ and K_n. The first of these grows without bound when $r\,x_n \to 0$, while K_n grows without bound when $x_n \to 1$. The first of these is easily handled. Near $r = 0$, $x_n \propto r$. Thus $(r\,x_n)^{1/2} \propto x_n$. An expansion of the functions in powers of x_n near $x_n = 0$, shows that

$$(2 - x_n)\,K_n - 2\,E_n \propto x_n^{\,2}. \tag{A1}$$

Thus, at these points a_n approaches zero. Although this is obvious from physical considerations, the computer must be given mathematical reasons. When $x_n = 1$, a true singularity is found.

$$K_n \propto \ln\left[4\,(1 - x_n^{\,1/2})^{-1}\right]. \tag{A2}$$

This is the point at which $r = r_n$, $z = z_n$. In Eq. (10) the current cross section was assumed infinitesimal. This introduces a singularity into the current density. In the case of A_0 one could introduce the wire cross section but the easiest solution is to avoid the singular point. The slug will never run through the current-carrying element so the true value of A_0 at that point is unimportant. In the other a_n this

singularity occurs in a function which is to be integrated. Since K_n is proportional to the logarithm, it is to be expected that the integral of K_n will remain finite. Physically this is expected to be true since infinite fields are not found in the slug. It appears to be true mathematically. While the integrals of Eq. (25s) have not been solved analytically, the following integrals can be solved and are all found to be finite:

$$\int_0^1 K_n \, dx_n$$

$$\int_0^1 K_n \, x_n \, dx_n \tag{A3}$$

$$\int_0^1 K_n \, x_n^2 \, dx_n \, .$$

In each case the approximation

$$\int_0^1 K_n \, g(x_n) \, dx_n = \int_0^{1-\epsilon} K_n \, g(x_n) \, dx_n + \epsilon \left[K_n \, g(x_n) \right]_{x=1-\epsilon} \tag{A4}$$

gives excellent results. With $\epsilon \leq 10^{-2}$ the error is less than 1 percent.

PHYSICAL SCIENCES RESEARCH PAPERS

No. 1. Central-Force Laws for an Elliptic Orbit, *Kurt Toman, March 1964 (REPRINT).*

No. 2. Structure of 10, 10-Dibromoanthrone, *J. Silverman, N. F. Yannoni, February 1964 (REPRINT).*

No. 3. Ion Dissociation in the Drift Tube of a Time-of-Flight Mass Spectrometer: V. Analytic Solutions of the Flight-Time Shift Equation, *W. W. Hunt, Jr., M. J. Kennedy, February 1964.*

No. 4. Asymptotic Form of the Electron Capture Cross Section in the Impulse Approximation, *R. A. Mapleton, March 1964 (REPRINT).*

No. 5. Intelligibility of Excerpts From Fluent Speech: Effects of Rate of Utterance and Duration of Excerpt, *J. M. Pickett, Irwin Pollack, March 1964 (REPRINT).*

No. 6. Back-Scatter by Dielectric Spheres With and Without Metal Caps, *David Atlas, Kenneth M. Glover, March 1964 (REPRINT).*

No. 7. An Adaptive Filter for the Design of Ionospheric Disturbance Detectors (U), *Richard D. Smallwood, 1/Lt, USAF, February 1964 (SECRET).*

No. 8. The Nonlinear Interaction of an Electromagnetic Wave With a Time-Dependent Plasma Medium, *Robert J. Papa, April 1964.*

No. 9. Drastic Reduction of Warm-up Rate Within a Dewar System by Helium Desorption, *Peter D. Gianino, January 1964.*

No. 10. The Antipodal Image of an Electromagnetic Source, *Kurt Toman, April 1964 (REPRINT).*

No. 11. Radiation Forces in Inhomogeneous Media, *E.J. Post, April 1964 (REPRINT).*

No. 12. Progressive Failure Prediction, *Walton B. Bishop, April 1964 (REPRINT).*

No. 13. Visual Data Transmission, *Ronald J. Massa, 1/Lt, USAF, April 1964.*

No. 14. Rydberg Absorption Series of N_2, *M. Ogawa and Y. Tanaka, May 1964 (REPRINT).*

No. 15. 600-A Band of Helium, *Y. Tanaka and K. Yoshino, May 1964 (REPRINT).*

No. 16. Charge Transfer Studies With a Time-of-Flight Mass Spectrometer: II. Kinetic Analysis, Including Attenuation of Both Neutrals and Ions by Scattering, *W. W. Hunt, Jr., May 1964.*

No. 17. Photo-Induced Electron Transfer in Dye-Sulphydryl Protein Complex, *Eiji Fujimori, May 1964, (REPRINT).*

No. 18. Intelligibility of Excerpts From Fluent Speech: Auditory vs. Structural Context, *Irwin Pollack and J.M. Pickett, May 1964, (REPRINT).*

No. 19. A Study of Transverse Modes of Ruby Lasers Using Beat Frequency Detection and Fast Photography, *C. Martin Stickley, May 1964.*

No. 20. Some Effects of Semantic and Grammatical Context on the Production and Perception of Speech, *Philip Lieberman, June 1964 (REPRINT).*

No. 21. Infrared Absorption of Magnesium Stannide, *Herbert G. Lipson and Alfred Kahan, June 1964 (REPRINT).*

No. 22. On the Optimum Design of Multipath Signals, *Neil J. Bershad, 1/Lt USAF, June 1964.*

No. 23. Area Properties of Television Pictures, *S. Nishikawa, R.J. Massa, J.C. Mott-Smith, June 1964.*

No. 24. A Geometric Study of Coherence Properties of Partially Polarized Electromagnetic Radiation, *E.F. Bolinder, June 1964.*

No. 25. The Preparation of High-Purity Boron by the Iodide, *A.F. Armington, G.F. Dillon, and R.F. Mitchell, June 1964 (REPRINT).*

No. 26. An Interpretation of the Far-Field Effects of a Rocket in the Ionosphere (U), *Thomas B. Conley and James E. Higgins, June 1964 (SECRET).*

No. 27. A Radon-Nikodym Theorem in Dimension Lattices, *S.S. Holland, Jr., June 1964 (REPRINT).*

No. 28. Plasma Produced Antenna Pattern Distortion, *Daniel J. Jacavanco, June 1964.*

No. 29. Geometry and First-Order Error Statistics for Three- and Four-Station Hyperbolic Fixes on a Spherical Earth, *Edward A. Lewis, June 1964.*

No. 30. Ion Dissociation in the Drift Tube of a Time-of-Flight Mass Spectrometer: III. Flight-Time Shift Equations for Spurious Fragment Peaks Arising From Charge Transfer and Dissociation Reactions Occurring Inside the Potential Barrier, *W.W. Hunt, Jr., June 1964.*

No. 31. Dolph-Tchebyscheff Arrays of Many Elements and Arbitrary Uniform Spacing, *Charles J. Drane, Jr., June 1964.*

No. 32. Measurement of Noise Figure of an X-Band Waveguide Mixer with Tunnel Diode, *Gustav H. Blaeser, July 1964.*

No. 33. Transient Reflection and Transmission of a Plane Wave Normally Incident Upon a Semi-Infinite Anisotropic Plasma, *Carl T. Case, 1/Lt, USAF, July 1964.*

No. 34. Low-Temperature Far-Infrared Spectra of Germanium and Silicon, *Peter J. Gielisse, James R. Aronson and Hugh G. McLinden, June 1964.*

No. 35. Absorption Coefficients of Carbon Monoxide in the 1006-600-A Wavelength Region, *R.E. Huffman, J.C. Larrabee and Y. Tanaka, July 1964 (REPRINT).*

No. 36. Asymptotic Form of the Electron Capture Cross Section in First Born and Distorted Wave Approximations, *R.A. Mapleton, July 1964 (REPRINT).*

No. 37. A Computer Approach to Laser Design, *T.G. Purnhagen and J. Lubelfeld, July 1964 (REPRINT).*

No. 38. Apparent Sky Temperatures at Millimeter-Wave Frequencies, *Karl N. Wulfsberg, July 1964.*

No. 39. Observation of 2,1 Charge Transfer in a TOF Mass Spectrometer (Text of a paper presented at the Southwestern Meeting of the American Physical Society at Tucson, Arizona, on 28 February 1964), *W.W. Hunt, Jr., and K.E. McGee, July 1964.*

No. 40. PMR Bi-Static Results During the Period 13 August to 14 December 1962, *T.D. Conley, July 1964 (SECRET).*

No. 41. EM Pulses From 1962 USSR Nuclear Tests, Extracted From Sferics Records (U), *A. Ganio and J.L. Heckscher, Capt, USAF, July 1964 (SECRET-RD).*

No. 42. Dislocation Structures in Single-Crystal Al_2O_3, *D.L. Stephens and W.J. Alford, August 1964 (REPRINT).*

No. 43. Anomalies in VLF Signals Observed During High-Altitude Nuclear Tests, 1962 (U), *Alma Ganio, August 1964 (SECRET-RD).*

No. 44. Molecular Structure of 2-(4'-amino-5'-azamethenyl pyrimidyl)-3 pentene-4-ol, *N.F. Yannoni and Jerry Silverman, August 1964 (REPRINT).*

No. 45. Output Power from GaAs Lasers at Room Temperature, *C.C. Gallagher, P.C. Tandy, B.S. Goldstein, and J.D. Welch, August 1964 (REPRINT).*

No. 46. Weight Distribution of the Quadratic Residue (71,35) Code, *Vera Pless, August 1964.*

No. 47. On the Convergence and Ultimate Reliability of Iterated Neural Nets, *R.H. Urbano, September 1964 (REPRINT).*

No. 48. Confidence Levels for the Sample Mean and Standard Deviation of a Rayleigh Process, *Leo M. Keane, September 1964.*

No. 49. Radio Frequency Propagation Through an Inhomogeneous, Magnetoactive, Nonlinear Plasma Medium, *R.J. Papa, September 1964.*

No. 50. A Determination of the Electromagnetic Scattering From a Cavity Backed Plane Surface, *John K. Schindler, 1/Lt, USAF, and Floyd V. Schultz, September 1964.*

No. 51. Forbidden Absorption-Band Systems of N_2 in the Vacuum-Ultraviolet Region, *Y. Tanaka, M. Ogawa, and A.S. Jursa, September 1964 (REPRINT).*

No. 52. Metal Complexes—I. Preparation and Physical Properties of Transition Metal Complexes of 6-Mercaptopurine and 4-Mercapto-6, 7-Diphenyl Pteridine, *Amiya K. Ghosh and Suprabhat Chatterjee, September 1964 (REPRINT).*

No. 53. Afterglow Tails and Stability of High-Density Nanosecond Arc Channels, *Heinz Fischer and Walter B. Rüppel, September 1964 (REPRINT).*

No. 54. A New Compound, Boron Triiodide–Phosphorus Triiodide, *R.F. Mitchell, J.A. Bruce, and A.F. Armington, October 1964 (REPRINT).*

No. 55. Theory of Continuous Zone Refining Via the Zone-Transport Method, *John K. Kennedy and N. Gr -- Parke, III, October 1964.*

No. 56. Absorption Spectra of H_2 in the Vacuum-Ultraviolet Region. I. The Lyman and the Werner Bands, *T. Namioka, October 1964 (REPRINT).*

No. 57. Effects of Energetic Photon Irradiation on Germanium, *P.H. Hannaway, H.M. DeAngelis, and E.Y. Wang, October 1964.*

No. 58. Physics of the Mossbauer Effect, *Leonard J. Eyges, October 1964.*

No. 59. Infrared Spectra of Inorganic Dielectric Solids, *Johannes N. Plendl and Peter J. Gielisse, May 1964.*

No. 60. Nitrogen and Oxygen Absorption Cross-Sections in the Vacuum Ultra-violet, *R.E. Huffman, Y. Tanaka, and J.C. Larrabee, October 1964 (REPRINT).*

No. 61. The Linear Prediction of Deterministic Signals, *Samuel Zahl, October 1964 (REPRINT).*

PHYSICAL SCIENCES RESEARCH PAPERS (Continued)

No. 62. Last Mean Square Error Analysis of PCM Transmission, *Ian I. Young, October 1964.*
No. 63. The Dielectric and Wire Grid Transmission Line, *Otho L. Kerr, Jr., November 1964.*
No. 64. A Program for the Solution of a Class of Geometric-Analogy Intelligence-Test Questions, *Thomas G. Evans, November 1964.*
No. 65. Dispersion Analysis of Optical Reflectivity, *Alfred Kahan, November 1964.*
No. 66. Autoionization Spectra of Gases Observed in the Vacuum Ultraviolet, *Robert E. Huffman, November 1964.*
No. 67. Attempted Explanations of Ball Lightning, *Edmond M. Dewan, November 1964.*
No. 68. Energy Momentum Conservation and Some of Its Consequences for the Classical Particle, *E.J. Post, December 1964.*
No. 69. Harmonic Generation of Microwave Phonons in Quartz, *Paul H. Carr, December 1964 (REPRINT).*
No. 70. Isotope Shift of the Nitrogen Absorption Bands in the Vacuum Ultraviolet Region, *M. Ogawa, Y. Tanaka, and A.S. Jursa, December 1964 (REPRINT).*
No. 71. A Study of a Scintillation Mechanism, *Kurt Toman, November 1964.*
No. 72. Error Probabilities for Certain Spread Channels, *John N. Pierce, December 1964.*
No. 73. The Ion Exchange Properties of Cerium(IV) Compounds, *G.G. Rocco, J.R. Weiner and J.P. Cali, December 1964.*
No. 74. Solving the Wiener-Hopf Equation, *David A. Shnidman, January 1965.*
No. 75. Simple High Speed Kinematography of Nanosecond Exposure, *Heinz J. Fischer and Albert Fritzsche, January 1965 (REPRINT).*
No. 76. Plane Wave Propagation in a Nonlinear, Inhomogeneous, Time-Dependent Plasma Medium, *R.J. Papa, January 1965.*
No. 77. Solar Temperature Measurements at 15 and 35 Gc, *K.V. Wulfsberg and J.A. Short, February 1965.*
No. 78. On Witt's Theorem for Nonalternating Symmetric Bilinear Forms Over a Field of Characteristic 2, *Vera Pless, February 1965 (REPRINT).*
No. 79. Magnetic Anisotropy Fields in Single Crystal Iron Garnets, *Peter D. Gianino, February 1965.*
No. 80. Energy Source Requirements for Reliable Circuitry, *Walton B. Bishop, February 1965 (REPRINT).*
No. 81. Absorption Spectra of H_2 in the Vacuum Ultraviolet Region. II. The B'-X, B''-X, D-X, and D'-X Bands, *T. Namioka, February 1965 (REPRINT).*
No. 82. A Symbolic Notation Applied to Unbalanced Ladder Networks, *Kurt H. Haase, February 1965 (REPRINT).*
No. 83. Simultaneous Measurements and Spectral Analysis of Micropulsation Activity, *R. L. Komack, A.S. Orange, F.X. Bostick, and T. Cantwell, February 1965 (REPRINT).*
No. 84. Ion Dissociation in the Drift Tube of a Time-of-Flight Mass Spectrometer: Spurious Fragments Arising from Charge-Transfer and Dissociation Reactions of Retarded Ions, *W.W. Hunt, Jr., and K.E. McGee, March 1965 (REPRINT).*
No. 85. An Evaluation of an Important Advance in Network Synthesis Theory, *E. Folke Bolinder, March 1965.*
No. 86. Solid-Liquid Phase Equilibrium in Binary Systems of Triphenyl Antimony with Biphenyl, Naphthalene, and Benzoic Acid, *Marvin S. Brooks, March 1965.*
No. 87. 9-Dicyanomethylene-2,4,7-trinitrofluorene, A New Electron Acceptor, *Tapan K. Mukherjee and Leonard A. Levasseur, March 1965 (REPRINT).*
No. 88. Solution and Theoretical Evaluation of Steady-State Equations in Continuous Zone Refining, *John K. Kennedy and N. Grier Parke, April 1965 (REPRINT).*
No. 89. Absorption Spectrum of Electrically Excited Nitrogen Molecules in the Vacuum-uv Region, *M. Ogawa, Y. Tanaka, and A.S. Jursa, April 1965 (REPRINT).*
No. 90. The Perfectly Coupled and Shunt-Augmented T Two-Port, *Kurt H. Haase, April 1965.*
No. 91. Helium Continuum Afterglow in the Vacuum Ultraviolet, *R.E. Huffman, J.C. Larrabee, Y. Tanaka, and D. Chambers, April 1965 (REPRINT).*
No. 92. A Proposed Method for the Determination of the Standard Free Energy of Formation of a Double Oxide by a Mass Spectrometer, *J. Smiltens, April 1965 (REPRINT).*
No. 93. Optimal Cooperative State Rendezvous and Pontryagin's Maximum Principle, *Stephen J. Kahne, 1/LT, USAF, April 1965.*
No. 94. Feasible Control Computations Using Dynamic Programming, *Stephen J. Kahne, 1/LT, USAF, April 1965.*
No. 95. Experimental Study of Zone Refining of the Binary System Triphenyl Antimony-Biphenyl, *Marvin S. Brooks, and Willard R. Hancock, April 1965.*
No. 96. On the Study of Fine Structure in Tunnel Junctions, *F.D. Shepherd, Jr., A.C. Yang, J.E. Vickers, and T.R. King, Jr., April 1965 (REPRINT).*
No. 97. Modified Phycoerythrin from Porphyridium Cruentum Treated with p-Chloro-Mercuribenzoate, *Eiji Fujimori, April 1965 (REPRINT).*
No. 98. Guide to the Interpretation of Space Group Symbols, *Stanley K. Dickinson, Jr., April 1965.*
No. 99. Calculated Cross Sections for Atomic Displacements Produced by Electrons in the 1.0-3.0 MeV Energy Range, *Edward A. Burke, Neil J. Grossbard, and Lester F. Lowe, 1965.*

PHYSICAL SCIENCES RESEARCH PAPERS (Continued)

No. 100. Photoelectric Yields for Oblique Incidence of Extreme Ultraviolet Radiation, *L. Heroux, J.E. Manson, H.E. Hinteregger, and W.J. McMahon, April 1965 (REPRINT).*

No. 101. Two Phosphorescences and Electron Transfer in Dye-Disulfhydryl Compound Complex, *Eiji Fujimori, May 1965 (REPRINT).*

No. 102. Infrared Lattice Vibrations of Magnesium Stannide, *A. Kahan, H.G. Lipson, and E.V. Loewenstein, May 1965 (REPRINT).*

No. 103. On the Theory of Boolean Formulas: Subformulas and Substitution Operators, *L. Calabi and E.W. Samson, May 1965.*

No. 104. On the Resolving Power of Ground Mapping Radar Antennas, *J.F. McIlvenna and C.J. Drane, Jr., May 1965.*

No. 105. Electromagnetic Properties of a Plasma-Covered Antenna, *Daniel J. Jaccarino, May 1965.*

No. 106. On the Impedance Method for Measuring High Electron Density and Electron Collision Frequency in a Gaseous Plasma Column, *Denis M. Coffey, May 1965.*

No. 107. Structure of 9,9,10,10-Tetrachloroanthracene, *N.F. Yannoni, A.P. Krukonis, and J. Silverman, June 1965 (REPRINT).*

No. 108. Waveforms and Relative Phase Stability of Transients Radiated from a Helicopter-Supported Antenna Wire, *E.A. Lewis, J.E. Rasmussen, and J.R. Stahmann, June 1965 (REPRINT).*

No. 109. Infrared Spectra of Crystals, *Peter J. Gielisse, and Shashanka S. Mitra, June 1965.*

No. 110. DEBUG—An Extension to Current Online Debugging Techniques, *Thomas G. Evans, and D. Lucille Darley, June 1965 (REPRINT).*

No. 111. On the Relative Efficiencies of Context-Free Grammar Recognizers, *T.V. Griffiths, and S.R. Petrick, June 1965 (REPRINT).*

No. 112. State-Logic Relations in an Iterative Structure for Autonomous Sequential Machine, *William F. King, III, 1/Lt, USAF, June 1965.*

No. 113. Optimum Binary FSK for Transmitted Reference Systems Over Rayleigh Fading Channels, *Neil J. Bershad, June 1965.*

No. 114. Distortion of a Magnetic Field by the Motion of a Cylindrical Conductor, *Joseph G. Kelley, and Ronald S. Finn, June 1965.*