AD

USAAML TECHNICAL REPORT 65-39

POLYURETHANE AS EROSION RESISTANT MATERIAL FOR HELICOPTER ROTOR BLADES

By

E. Rouzee Givens

JUN 16 1965

TISIA B

May 1965

U. S. ARMY AVIATION MATERIEL LABORATORIES
FORT EUSTIS, VIRGINIA

2.00
0.50
50p

PROCESSING COPY
ARCHIVE COPY

DDC Availability Notice

Qualified requesters may obtain copies of this report from DDC.

This report has been furnished to the Department of Commerce for sale to the public.

Disclaimer

The findings in this report are not to be construed as an official Department of the Army position, unless so designated by other authorized documents.

When Government drawings, specifications, or other data are used for any purpose other than in connection with a definitely related Government procurement operation, the United States Government thereby incurs no responsibility nor any obligation whatsoever; and the fact that the Government may have formulated, furnished, or in any way supplied the said drawings, specifications, or other data is not regarded by implication or otherwise as in any manner licensing the holder or any other person or corporation, or conveying any rights or permission, to manufacture, use, or sell any patented invention that may in any way be related thereto.

Trade names cited in this report do not constitute an official indorsement orapproval of the use of such commercial hardware or software.

Disposition Instructions

Destroy this report when it is no longer needed. Do not return it to the originator.

ENGINEERING REPORT

TASK 1P121401A14176
USAAML Technical Report 65-39

POLYURETHANE AS EROSION RESISTANT MATERIAL FOR HELICOPTER ROTOR BLADES

May 1965

E. ROUZEE GIVENS, Project Engineer

U. S. ARMY AVIATION MATERIEL LABORATORIES
Fort Eustis, Virginia

ABSTRACT

This report covers the use of PO 655 polyurethane material as an erosion resistant boot for the protection of helicopter rotor blades. Two adhesive systems were used with the polyurethane boots, and tests were conducted on CH-34 and UH-1B/D main rotor blades to evaluate the survivability of the material in an abrasive environment.

CONTENTS

	Page
ABSTRACT	iii
LIST OF ILLUSTRATIONS	vii
SUMMARY	1
CONCLUSIONS	2
RECOMMENDATIONS	2
BACKGROUND	3
DESCRIPTION OF PO 655 POLYURETHANE	4
YUMA PROVING GROUNDS TEST	6
Test Vehicle	6
Installation of PO 655 Polyurethane on Blades	6
Repairs Made to Erosion Resistant System	8
Removal and Analysis of PO 655 Polyurethane Boots	8
SUPPLEMENTAL TESTS	15
Joint Army and Navy Test at Naval Air Test Center (NATC), Patuxent River, Maryland	15
Tests Conducted at Fort Rucker, Alabama	18
Field Tests at Fort Bragg, North Carolina	19
Field Tests at Fort Benning, Georgia	19

Page

EVALUATION 19

DISTRIBUTION 20

APPENDIX. Installation, Removal, and Repair Procedures for a Helicopter Rotor Blade Sand Erosion Protection System 22

ILLUSTRATIONS

Figure		Page
1	Whirling-Arm Rig With Power Source and Controls . . .	5
2	Whirling-Arm Blade With Replaceable Leading-Edge Section	5
3	Top View of Whirling-Arm Rig Showing Sand Hopper . . .	5
4	CH-34 Helicopter in Desert Environment	7
5	CH-34 Helicopter at Laguna Army Airfield	9
6	Polyurethane Boot After 1 Year of Service	9
7	Polyurethane Boot After 1 Year 8 Months of Service . . .	10
8	CH-34 Main Rotor Blade Without Erosion Boot	10
9	Polyurethane Boot at Time of Removal	10
10	Vidigage Instrument, Typical CH-34 Spar, and CH-34 Main Rotor Blade	12
11	CH-34 Blade Being Measured	13
12	Outboard Section of CH-34 Main Rotor Blade Spar	13
13	Protected and Unprotected Blade Comparison	14
14	UH-1 Helicopter Hovering Over Sand	16
15	UH-1 Blade Showing Leading-Edge Deformation and Condition of Neoprene Fairing	16
16	Outboard Polyurethane Boot on UH-1	17
17	UH-1 Blade Comparison	17

Figure		Page

18	Failure of Adhesive After 130 Flight Hours	18
19	Polyurethane Erosion Protection System	22
20	Positioning the Blade in Workstands	25
21	Installation Area	26
22	Masking the Installation Area	27
23	Erosion Protection System Location	28
24	Masking the Erosion Protection Area	29
25	Taping the System in Place	30
26	Taping the Starched Cloth in Place	31
27	Spreading the Adhesive	33
28	Rolling Out Entrapped Air and Excess Adhesive	34
29	Masking the System for Edge Sealing	35
30	Removing Damaged Portion	39

SUMMARY

This report covers the tests of PO 655 polyurethane (Armstrong Cork Company) as an erosion resistant material for helicopter main rotor blades in desert operations. The polyurethane boots were installed at Yuma Proving Grounds, Arizona, on two of the four main rotor blades of the CH-34 helicopter for a period of approximately 2 years. Other tests using the polyurethane erosion boots on main rotors of the UH-IB/D helicopters were conducted at various Government installations.

The objective of these tests was to evaluate polyurethane as a protective coating for helicopter main rotor blades, since frequent reports from military services have shown that much helicopter downtime and costly blade repairs are the result of chronic sand erosion.

During the tests, it was desired (1) to determine if PO 655 polyurethane film could be installed in the field on helicopter rotor blades, (2) to compare the wear patterns on main rotor blades with and without the erosion boots, and (3) to evaluate the survivability of the polyurethane boots in a desert environment.

These tests proved that the erosion boots can be installed in the field by experienced personnel; it was also determined that the PO 655 polyurethane is a satisfactory material to protect helicopter main rotor blades in desert environment.

CONCLUSIONS

It is concluded that:

1. Polyurethane is a suitable erosion resistant material for helicopter rotor blades in desert environment.

2. Polyurethane boots can be applied to helicopter rotor blades in the field by experienced personnel.

3. Minor repairs and patches can be accomplished on the polyurethane in the field to prevent premature removal of the erosion boots.

4. Continuing research is necessary to obtain a better protective system for all environments.

RECOMMENDATIONS

It is recommended that:

1. Polyurethane erosion resistant boots be applied to helicopter rotor blades requiring protection from sand erosion in a desert environment.

2. Polyurethane erosion resistant boots be installed by properly trained personnel.

3. Upon installation of the boots, the helicopter maintenance personnel make continual inspection and effect early repair as prescribed in the instructions.

4. This program be continued in order to take advantage of new materials and new techniques to provide a better protective system.

BACKGROUND

The Army Aviation Test Board, Fort Rucker, Alabama, conducted desert tests with various helicopters and reported that rotor blade sand erosion was a chronic problem and needed correcting. A research and development contract was initiated by the U. S. Army Transportation Research Command* with the prime objective of finding a suitable material that would protect the main rotor blades in a desert environment and that would withstand other extreme environmental conditions such as rain, snow, and dust.

Based on the results of this command's contract DA 44-177-TC-836 with the Boeing Company, Vertol Division, PO 655 polyurethane (Armstrong Cork Company) was selected as the most promising erosion resistant material for protecting helicopter rotor blades in a desert environment. The Phase I results of this contract were published in TCREC Technical Report 62-111, Helicopter Rotor Blade Erosion Protective Materials.

It was desired to test the material in actual use in a desert environment to verify its merits. Tests were conducted at Yuma Proving Grounds, Yuma, Arizona, during the period from February 1963 to January 1965 to determine ease of installation on rotor blades in the field and the protection PO 655 affords.

As supplemental information, the results of tests performed at various nondesert locations are briefly described following the account of the Yuma tests.

*In March 1965, the name of this command was changed to U. S. Army Aviation Materiel Laboratories.

DESCRIPTION OF PO 655 POLYURETHANE

To determine the best material to protect the leading edge of helicopter main rotor blades, 184 materials were tested. The test conducted on the most promising materials was a whirling-arm test, which consisted of controlled release of sand from eight bins onto the specimens rotating at tip speeds of 600 and 750 feet per second. Control specimens of .010-inch-thick, full-hard, 301 stainless steel were used on each run for a comparison (see Figures 1, 2, and 3).

PO 655 polyurethane material (Armstrong Cork Company) proved to be the best material tested for resistance to sand erosion and was equal to neoprene in resistance to rain. For complete details of this test, see TCREC Technical Report 62-111. The properties of the polyurethane are as follows:

Hardness	Shore A durometer 53
Weight	95 grams per square foot by .031 inch thick
Color	Transparent, maple syrup brown
Elongation	700 percent
Minimum Tensile Strength	1000 pounds per square inch

The PO 655 polyurethane is a cast urethane product, which is centrifugally cast on the inside diameter of a Teflon-lined cylindrical mold. To form a flat 32-inch-by-36-inch sheet, the polyurethane cylinder is cut. The smooth "as cast" surface is used as the exterior of the erosion protective system, and the exact thickness is achieved by sanding the Teflon release side.

Figure 1. Whirling-Arm Rig With Power Source and Controls.

Figure 2. Whirling-Arm Blade With Replaceable Leading-Edge Section.

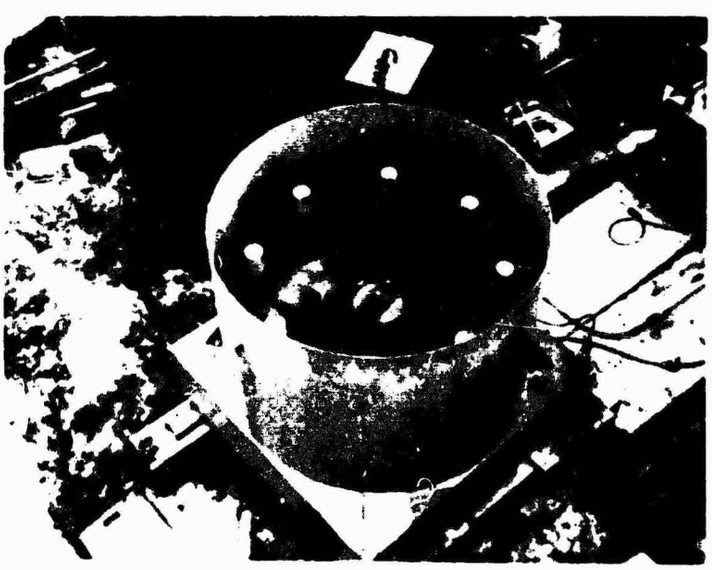

Figure 3. Top View of Whirling-Arm Rig Showing Sand Hopper.

YUMA PROVING GROUNDS TEST

TEST VEHICLE

The CH-34 helicopter (S/N60-3030) at Yuma Proving Grounds was the test vehicle used to evaluate the polyurethane material as an erosion resistant coating for the main rotor blades. The helicopter was parked outside so that the blades would be subjected to all desert environments. Two of the four blades could be covered to get comparative results, and the many landings in the sand and dust per hour of flying made the erosion of the main rotor blades critical (see Figure 4).

INSTALLATION OF PO 655 POLYURETHANE ON BLADES

Two of the main rotor blades (58-M-3911 and 58-M-4260) were removed from the CH-34 helicopter and placed in racks. The installation procedures were as follows:

1. The paint and primer were removed from the outboard 6-1/2-foot section of the exposed aluminum spar. This section of the blade had been masked off with tape.

2. Identical polyurethane boots were bonded with EC-2216 adhesive (Minnesota Mining and Manufacturing Company) and Bostic N-100-7 primer (on polyurethane only) to each of the blades. These boots extended 6 feet spanwise, beginning 2 inches from the outboard tip, and 3 inches chordwise on the top and bottom. After application of bleeder cloths and a vacuum bag system, the adhesive was cured at approximately 150° F. for 2 hours by using heat guns.

3. After removal of the vacuum bag and bleeder cloths, the polyurethane was faired into the aluminum spars with a 1-inch border of additional EC-2216 on all four sides of each boot. Because of the inherent "blind" characteristics of this bonding system and the

Figure 4. CH-34 Helicopter in Desert Environment.

field conditions under which the boots were applied, numerous small air bubbles developed under both boots. The "V" joint between the two 3-foot pieces of the polyurethane boot was filled with EC-801.

REPAIRS MADE TO EROSION RESISTANT SYSTEM

The first repair on the erosion resistant system was made after 46 flying hours and 4 months' exposure in the desert environment. The fairing material (EC-2216) was eroded at the tip of both blades, and the joint between the two 3-foot polyurethane boots showed evidence of erosion. To repair this condition, the EC-2216 fairing was removed from the outside of the boots, and neoprene paint was substituted. On blade 58-M-3911, a 3/8-inch-diameter blister had developed between the polyurethane and the Bostic primer. The defective area was on the bottom side, 8-1/2 inches from the tip and 1/2 inch from the nose radius, and was repaired by injecting adhesive (Armstrong J-1184) into the void and painting it with neoprene.

A second repair was made to the polyurethane erosion protective system on 19 June 1964 after the blades had 209 flying hours in desert environment. Blisters had developed on blade 58-M-3911. One blister, about 1 inch in diameter, was located 5 inches from the tip and 1/4 inch from the leading edge on top of the blade. Two sand-filled blisters, each 1/4 inch in diameter, were 28-1/2 inches and 32 inches, respectively, from the tip on the bottom side near the leading edge. On blade 58-M-4620, a 3/8-inch-diameter sand-filled blister, 5-1/2 inches from the tip, had developed on top of the blade. These defects were repaired by injecting adhesive Epon 828 into the blisters after the sand had been removed. Liquid neoprene (N-55) was applied over the cut areas and around the faired area of the polyurethane and blade. (See Figures 5 and 6 for condition of boots after 1 year of service and Figures 7 and 8 for comparison of blades after 1 year 8 months of desert operation.)

REMOVAL AND ANALYSIS OF PO 655 POLYURETHANE BOOTS

After the CH-34 helicopter left the desert environment, the boots were removed from the blades so that the polyurethane and the blades could be analyzed. The blades had had 339 flying hours, with an average of 10 landings per hour since the boot installation, and approximately 2 years of operation at Yuma Proving Grounds (see Figure 9).

A comparative analysis of the polyurethane, new and old, was made to determine the mechanical properties changes after test exposure (see Table I).

Figure 5. CH-34 Helicopter at Laguna Army Airfield.

Figure 6. Polyurethane Boot After 1 Year of Service.

Figure 7. Polyurethane Boot After 1 Year 8 Months of Service.

Figure 8. CH-34 Main Rotor Blade Without Erosion Boot.

Figure 9. Polyurethane Boot at Time of Removal.

The thickness of the polyurethane material had not changed since installation. Four specimens were cut in the conventional dumbbell shape from the new material and four from the material removed from the test rotor blades. Average results of the data collected indicate that the exposed

TABLE I

AVERAGE MECHANICAL PROPERTIES OF PO 655 POLYURETHANE

Material	Hardness (Shore A durometer)	Tensile Modulus (psi)	Tensile Strength (psi)
Old	62.25	85.95	543
New	52.25	74.6	1000 (minimum)*

*From manufacturer's material specifications.

polyurethane became noticeably harder, exhibited lower tensile strength, and had a higher tensile modulus.

The leading-edge spar thickness of two blades, one protected (58-M-3911) and one unprotected (58-M-4137), was measured (see Figures 10 and 11). The instrument used for these measurements was a Vidigage with a 4- to 8-megacycle-per-second oscillator and a 1/2-inch-diameter, type ZB, 9-megacycle-per-second transducer. Blade measurements are shown in Table II.

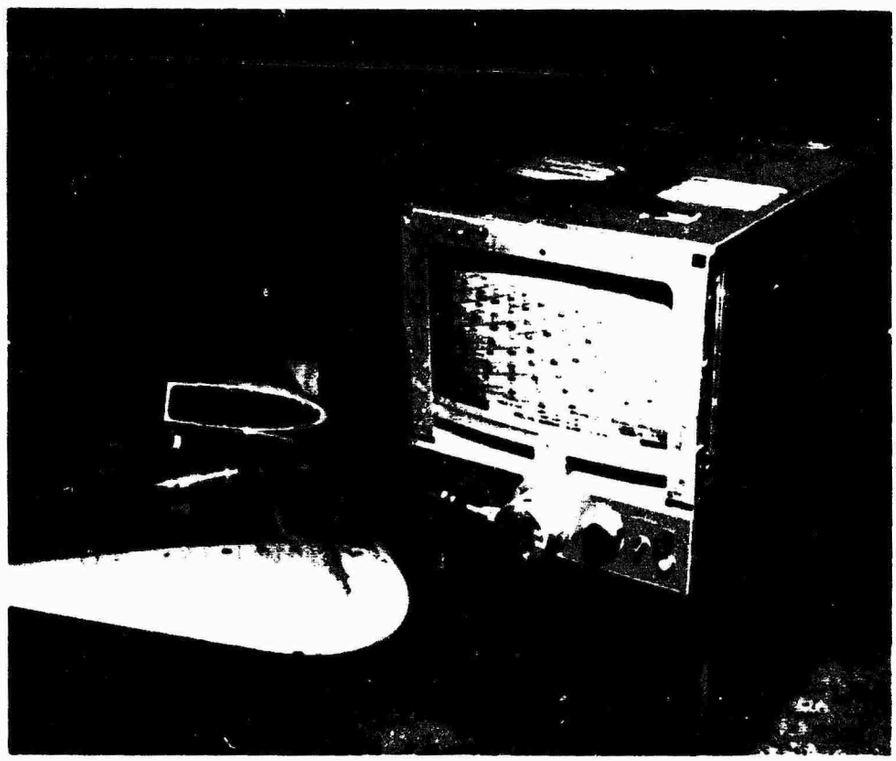

Figure 10. Vidigage Instrument, Typical CH-34 Spar, and CH-34 Main Rotor Blade.

Since the blades were not measured at the beginning of the test and since the thickness tolerance is .040 inch (see Figure 12), a direct comparison cannot be made. However, from Figure 13 it can be seen that over .010 inch of metal was saved by the polyurethene boot on the bottom, or wear side, of the blade.

Figure 11. CH-34 Blade Being Measured.

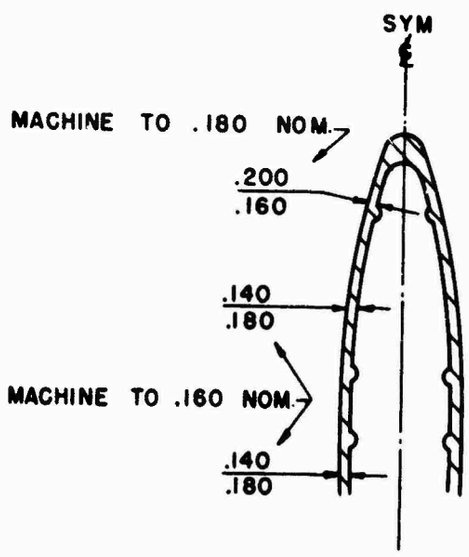

Figure 12. Outboard Section of CH-34 Main Rotor Blade Spar.

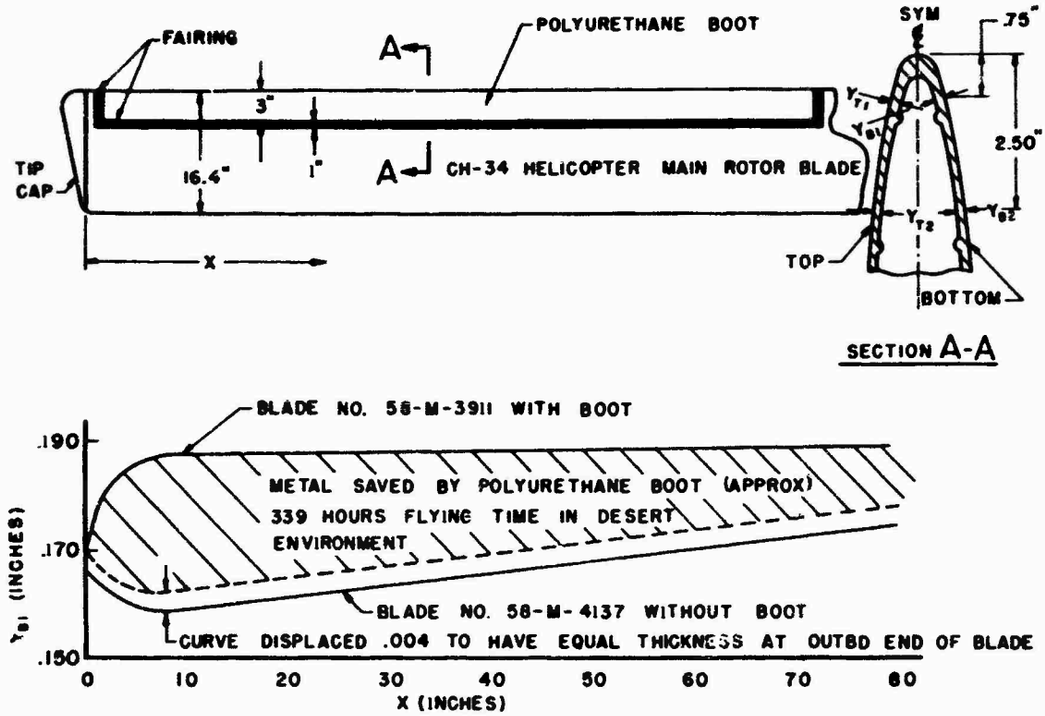

Figure 13. Protected and Unprotected Blade Comparison.

TABLE II

THICKNESS MEASUREMENTS OF LEADING EDGE OF CH-34 HELICOPTER ROTOR BLADES

STATION FROM OUTBOARD END X	BLADE 58-M-3911				BLADE 58-M-4137			
	BOTTOM		TOP		BOTTOM		TOP	
	Y_{B1}	Y_{B2}	Y_{T1}	Y_{T2}	Y_{B1}	Y_{B2}	Y_{T1}	Y_{T2}
.50	.170	.164	.185	.166	.166	.155	.193	.170
2.00	.180	.164	.185	.165	.164	.155	.193	.171
4.00	.179	.164	.184	.163	.164	.157	.194	.169
6.00	.180	.163	.183	.162	.163	.159	.195	.166
12.00	.186	.164	.186	.163	.158	.164	.193	.174
18.00	.188	.166	.187	.161	.160	.165	.193	.173
24.00	.185	.167	.182	.162	.162	.169	.192	.172
30.00	.186	.166	.185	.162	.165	.169	.191	.173
36.00	.189	.168	.184	.162	.167	.168	.195	.174
42.00	.192	.175	.182	.157	.166	.167	.198	.174
48.00	.193	.172	.181	.157	.163	.171	.197	.173
54.00	.194	.174	.180	.156	.164	.169	.193	.171
60.00	.192	.173	.180	.158	.162	.163	.190	.176
66.00	.192	.172	.179	.158	.167	.164	.198	.176
72.00	.189	.173	.180	.162	.170	.171	.198	.174
78.00	.185	.172	.179	.164	.172	.173	.195	.173

SUPPLEMENTAL TESTS

Since it had been determined in laboratory tests that PO 655 polyurethane was the most suitable off-the-shelf material to protect the helicopter main rotor blades, the next phase of the program was to install the boots on the helicopter blades and to test them under accelerated operational conditions.

In the tests conducted at the Naval Air Test Center and in the first test conducted at Fort Rucker, EC-2216 (Parts A and B) was used as the adhesive to bond the polyurethane to the blade. This adhesive system required a skilled technician, vacuum pump, and equipment that could not be found in the field.

Therefore, contract DA 44-177-TC-836 was modified to include the development of a simplified field method for maintenance personnel to install the polyurethane on the helicopter main rotor blades. After 199 adhesive formulations were tested, with both static and dynamic tests, it was determined that Milbond 934 (Parts A and B) or Epon 934 was the most suitable adhesive for bonding PO 655 polyurethane to stainless steel or aluminum leading edges of the rotor blades. The appendix (page 22) contains an excerpt, "Installation, Removal, and Repair Procedures for a Helicopter Rotor Blade Sand Erosion Protection System", from USATRECOM Technical Report 65-9 (A Simplified Field Method for Adhesive Bonding of a Polyurethane Erosion Protective Material to Helicopter Rotor Blades, which was prepared under the modified contract).

JOINT ARMY AND NAVY TESTS AT NAVAL AIR TEST CENTER (NATC), PATUXENT RIVER, MARYLAND

Identical 2-foot boots of PO 655 polyurethane were bonded to the UH-1B main rotor blades with EC-2216 adhesive on 16 January 1963 to determine if the added weight would have any detrimental effects on the helicopter's flying qualities. The instrumented aircraft (S/N 60-3560) was tested for approximately 7 hours under extreme maneuvers, and no adverse effect could be detected in the handling qualities due to the polyurethane boots.

On 1 April 1963, the same polyurethane erosion protective system was installed on the UH-1B main rotor blades. One boot, 27 inches long, was positioned 24 inches inboard from the blade tip; the other boot, 24 inches long, was positioned on the outboard tip of the blade.

Between 22 April 1963 and 24 May 1963, the helicopter was hovered for 50 hours over the Atlantic Ocean with no apparent damage or thickness

differential detected on the stainless steel leading edge or the applied polyurethane material. This test was conducted by NATC personnel at Oceana Naval Air Station, Virginia Beach, Virginia.

The UH-1B helicopter was then flown to NATC to conduct the sand test from 19 to 24 June 1963. After hovering the helicopter over a sandy beach for 1.4 hours (see Figure 14), the test was discontinued, due to the turbine's excessive gas temperature. The unprotected 301 stainless steel (.020-inch-thick, 1/4-hard) had deformed (see Figure 15), and approximately .007 inch of metal had eroded from the blade tip. The polyurethane boots were extensively cut, and the neoprene fairing was eroded (see Figure 16); however, PO 655 polyurethane had protected the airfoil

Figure 14. UH-1 Helicopter Hovering Over Sand.

Figure 15. UH-1 Blade Showing Leading-Edge Deformation and Condition of Neoprene Fairing. (Arrow indicates neoprene fairing.)

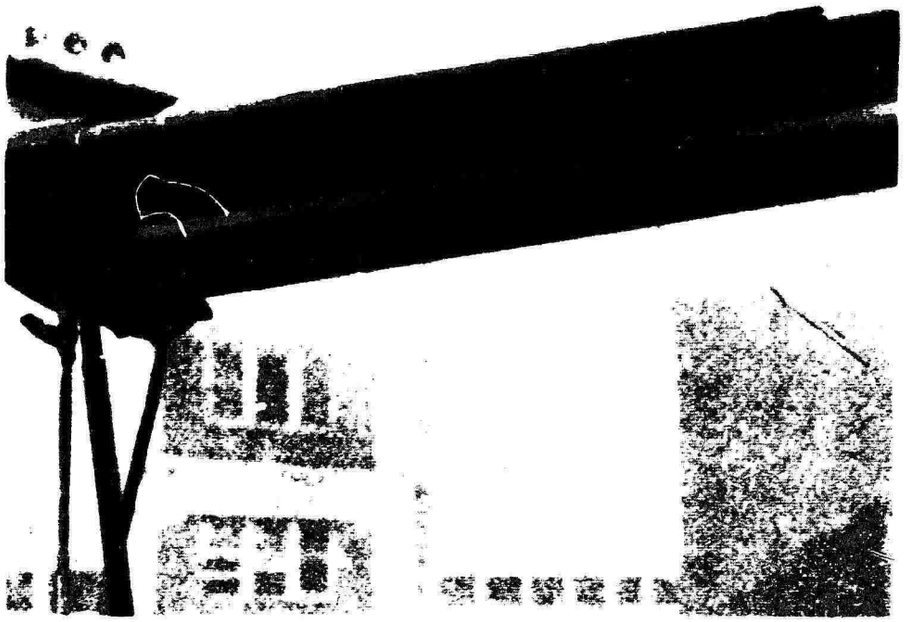

Figure 16. Outboard Polyurethane Boot on UH-1.

shape of the leading edge of the blade. Figure 17 shows a comparison of the blade without boots and the blade after the removal of the polyurethane boots.

Figure 17. UH-1 Blade Comparison. (Arrow 1 indicates blade without boot; Arrow 2 indicates blade after boot removal.)

TESTS CONDUCTED AT FORT RUCKER, ALABAMA

In February 1963, at Fort Rucker, 6-foot-long polyurethane boots were bonded with EC-2216 adhesive to the UH-1D helicopter (S/N 60-6034) main rotor blades. After 130 hours of flight time, the last 2 hours in rain, the outboard portion of the boots separated from the blade, so they were removed (see Figure 18).

Figure 18. Failure of Adhesive After 130 Flight Hours. (Last 2 hours in rain.)

No evidence of erosion was noted on the polyurethane. After this test, contract DA 44-177-TC-836 was modified to include in the program the objective of developing a better field bonding technique and fairing material for the PO 655 polyurethane material.

In March 1964, at Fort Rucker, Army personnel bonded the PO 655 polyurethane on the UH-1 (S/N 60-6034) with the new adhesive, Epon 934, parts A and B. Two 3-inch-diameter repair patches were installed in these boots - one after 160 hours and the other after 250 hours of flying time. After 365 flying hours (the last 3 in heavy rain) the boots separated from the blades and were removed.

FIELD TESTS AT FORT BRAGG, NORTH CAROLINA

On 6 February 1964, at Fort Bragg, the polyurethane system described in the appendix was installed on the UH-1 main rotor blades. Maintenance personnel from the 18th Airborne Corps witnessed the installation procedure. On 24 March 1964, the polyurethane system was applied to four UH-1 blades to instruct the 18th Airborne Corps and the 82nd Airborne Division. Thirty polyurethane erosion kits were assembled at this command and sent to Fort Bragg to be installed on UH-1 blades before exercise "Desert Strike". After the field exercise (15 June 1964), a report was made on the boots. Of the 26 installed systems, 15 sets of the blades were in good condition; 5 sets had been removed due to separation; and 6 sets had been destroyed during the exercise. From talks with maintenance personnel, it was concluded that all the boots installed under contractor supervision remained in good condition.

FIELD TESTS AT FORT BENNING, GEORGIA

The 11th Air Assault Division requested that 70 polyurethane erosion resistant kits for UH-1 helicopters be supplied to their units. The average life of the UH-1 main rotor blades operating in the Fort Benning area was 300 hours, although many of the blades were removed due to erosion after less than 150 flight hours. The first five kits were delivered to the 11th Air Assault Division on 2 June 1964. The aviation maintenance personnel were instructed by contractor personnel in the application of the kits. The remaining polyurethane kits were delivered by 16 June 1964 and were installed on the blades for field exercise "AGILE".

EVALUATION

As a result of a review of the test installations of the PO 655 polyurethane erosion resistant boots on helicopter main rotor blades, it is concluded that the material should be applied to all rotor blades operating in areas in which excessive wear has been experienced due to sand and dust erosion. Test results with the UH-1B and the UH-1D (44 foot) helicopter blades indicated that the blades became unserviceable after 40 hours in desert tests at Yuma Proving Grounds and after 100 hours of operation at Fort Benning and Fort Bragg. A set of these blades costs the Government $10,058, and they should have a normal service life of 1000 hours. The PO 655 polyurethane erosion resistant system components, such as those furnished for the UH-1B and UH-1D at Fort Benning and Fort Bragg, cost $120 per set. It is believed that if these boots are installed and maintained by properly trained personnel, the service life of the blades would not be reduced because of sand or dust erosion.

DISTRIBUTION

US Army Materiel Command	10
US Army Mobility Command	5
US Army Aviation Materiel Command	5
US Strike Command	1
Second United States Army	1
Third United States Army	1
Sixth United States Army	1
Eighth United States Army	1
Office of Ordnance, ODDR&E	1
Chief of R&D, DA	3
US Army Aviation Materiel Laboratories	32
USAAML Liaison Officer, US Army R&D Group (Europe)	5
US Army Natick Laboratories	2
US Army Engineer R&D Laboratories	4
US Army Signal R&D Laboratory Liaison Office, USACDC	1
US Army Limited War Laboratory	1
US Army Human Engineering Laboratories	2
Army Research Office-Durham	2
US Army Test and Evaluation Command	1
US Army Research Support Group	1
Plastics Technical Evaluation Center	1
US Army Combat Developments Command, Fort Belvoir	1
US Army Combat Developments Command Aviation Agency	3
US Army Combat Developments Command Armor Agency	1
US Army Combat Developments Command Transportation Agency	1
US Army Combat Developments Command Quartermaster Agency	1
US Army Combat Developments Command Experimentation Center	1
US Army War College	1
US Army Command and General Staff College	1
US Army Transportation School	1
US Army Aviation School	2
US Army Quartermaster School	1
Deputy Chief of Staff for Logistics, DA	1
US Army Transportation Center and Fort Eustis	1
US Army Infantry Center	1
US Army Aviation Maintenance Center	2
US Army Aviation Test Board	2
US Army Arctic Test Center	1
US Army Electronics Command	1
TC Liaison Officer, US Army Airborne, Electronics and Special Warfare Board	1

US Army Aviation Test Activity	1
US Army Transportation Engineering Agency	1
US Army General Equipment Test Activity	2
US Army Representative, AFSC, Andrews AFB	1
Air Force Systems Command, Wright-Patterson AFB	5
Air Force Flight Test Center, Edwards AFB	3
Air Proving Ground Center, Eglin AFB	1
Air University Library, Maxwell AFB	1
Chief of Naval Operations	1
Bureau of Ships, DN	1
Bureau of Naval Weapons	8
Chief of Naval Research	3
US Naval Supply R&D Facility	1
US Naval Postgraduate School	1
US Naval Air Station, Patuxent River	1
Commandant of the Marine Corps	2
Marine Corps Landing Force Development Center	1
Marine Corps Educational Center	1
Marine Corps Liaison Officer, US Army Transportation School	1
Testing and Development Division, US Coast Guard	1
Ames Research Center, NASA	1
NASA-LRC, Langley Station	1
NASA Representative, Scientific and Technical Information Facility	2
Canadian Liaison Officer, US Army Transportation School	1
Defense Documentation Center	20
US Patent Office	1
US Government Printing Office	1

APPENDIX

INSTALLATION, REMOVAL, AND REPAIR PROCEDURES FOR A HELICOPTER ROTOR BLADE SAND EROSION PROTECTION SYSTEM

(Excerpt from USATRECOM Technical Report 65-9)*

EROSION PROTECTION SYSTEM FIELD KIT INSTRUCTIONS

I. Materials

A. Polyurethane erosion protection system shown in Figure 19

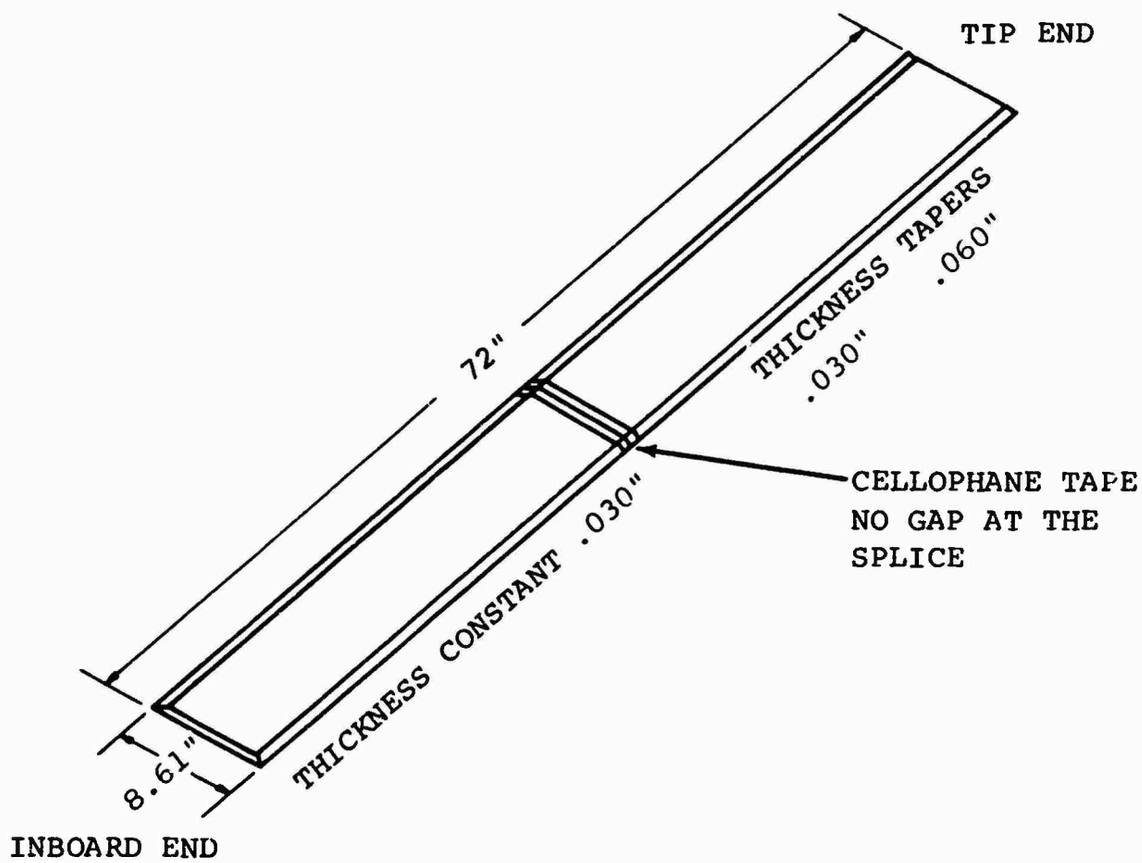

Figure 19. Polyurethane Erosion Protection System

*A Simplified Field Method for Adhesive Bonding of a Polyurethane Erosion Protective Material to Helicopter Rotor Blades, U. S. Army Transportation Research Command, Fort Eustis, Virginia, February 1965.

B. Starched cloth, 2 inches wide

C. Paper-covered double-back tape (masking tape which has pressure-sensitive adhesive on each side) 3/8 inch wide and 1 inch wide.

D. Clear cellophane tape, 3/4 inch wide

E. Paper-back masking tape, 1 or 2 inches wide

F. Epon 934 or Milbond 934 epoxy adhesive, parts A and B

NOTE: Adhesive is supplied in an installation quantity and a smaller patching quantity

G. Rubber rollers, 4 or 6 inches wide

H. Adhesive spreaders, serrated edge

I. Locating gage, aluminum

J. Brushes

K. White cotton gloves

L. Wooden tongue depressors, used as adhesive stirrers

M. Gates Engineering N-55 sealer, N-100-9 edge-sealer primer, and N-450-11 edge-sealer thinner

N. Number 80 and 320 grit paper

O. Bleached cheesecloth

P. Acetone

Q. Heat lamps or hot air blower

R. Aluminum or plastic chisels

S. Thermometer, range up to 250°F

T. Hypodermic syringe with #20 or larger needle

U. Distilled water - available from all medical units as 6505-149-1720 water for injection USP 1000 cc

V. The following optional equipment shall be used whenever available:

1. Rotating wire brushes, 6 inch dia, on a flexible shaft power grinder
2. Rotating and/or vibrating sanding machine equipped with Minnesota Mining and Manufacturing Company TR 1-M-1TE soft back, a weight finish paper with an open coat of silicon carbide size 240
3. Naphtha
4. Wood Chisels

II. <u>Precautions</u>

A. Acetone is flammable; all operations involving this material shall be performed in a fire-hazard-marked working area free of open flames. Excessive breathing of solvent vapors can be harmful; use this material with adequate ventilation.

B. Epoxy resin base materials, particularly the hardeners, contain toxic ingredients. Provide adequate ventilation during the mixing and subsequent operations. Skin contact should be avoided; and if accidential contact occurs, thoroughly wash the exposed area with soap and water.

C. Do not attempt to apply the adhesive when the air or blade surface temperature is above 85°F or below 60°F. Whenever high humidity conditions exist so that moisture appears on the cleaned metal surfaces, bonding operations should be discontinued or the surfaces kept dry with hot air blowers.

D. Epon 934 A/B is listed in APL 5090-20 dated 15 July 1963 as a product that meets the requirements of Military Specification MIL-A-5090 Type I according

to Report No. NAMC-AML 1515 of 22 August 1962. This material has a storage life at room temperature of 3 months. Material exceeding this storage time shall not be used for this installation.

III. Installation

A. It is best to install the erosion protection system indoors with the blades positioned with trailing edges down in suitable workstands, as shown in Figure 20. However, the system can be applied outdoors while the blades are on the helicopter. In the event the installation is made while the blades are on the helicopter, it is necessary to arrange for a suitable work platform in order to reach the rotor blades. In addition, it is necessary to support the blade 7 feet inboard of the tip end. If dust, rain, or fog should contaminate the cleaned surface or uncured adhesive, removal of the uncured adhesive with acetone and complete recleaning of the surface is required.

NOTE: Blade transportation racks may be used as a workstand. A soft cloth may be used to protect the blade trailing edge and skin surface in the rack.

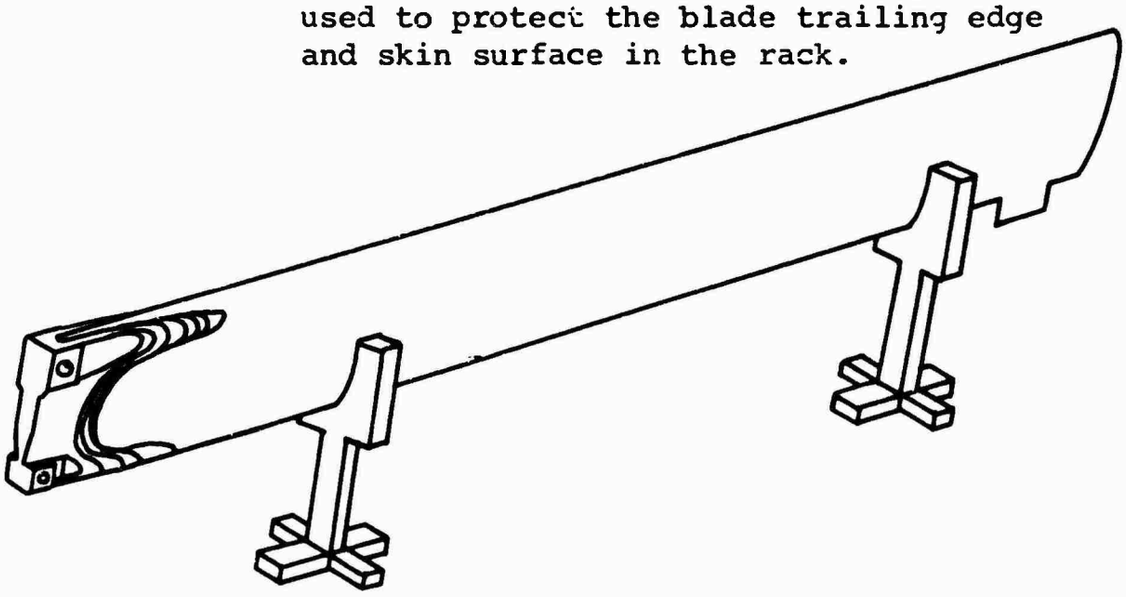

Figure 20. Positioning the Blade in Workstands

B. Using a locating gage and a soft pencil, mark off the installation area on the blade as shown in Figure 21.

CAUTION: Never use a sharp, hard instrument like a scribe on the blade, as a scratch in the metal will cause a loss in strength.

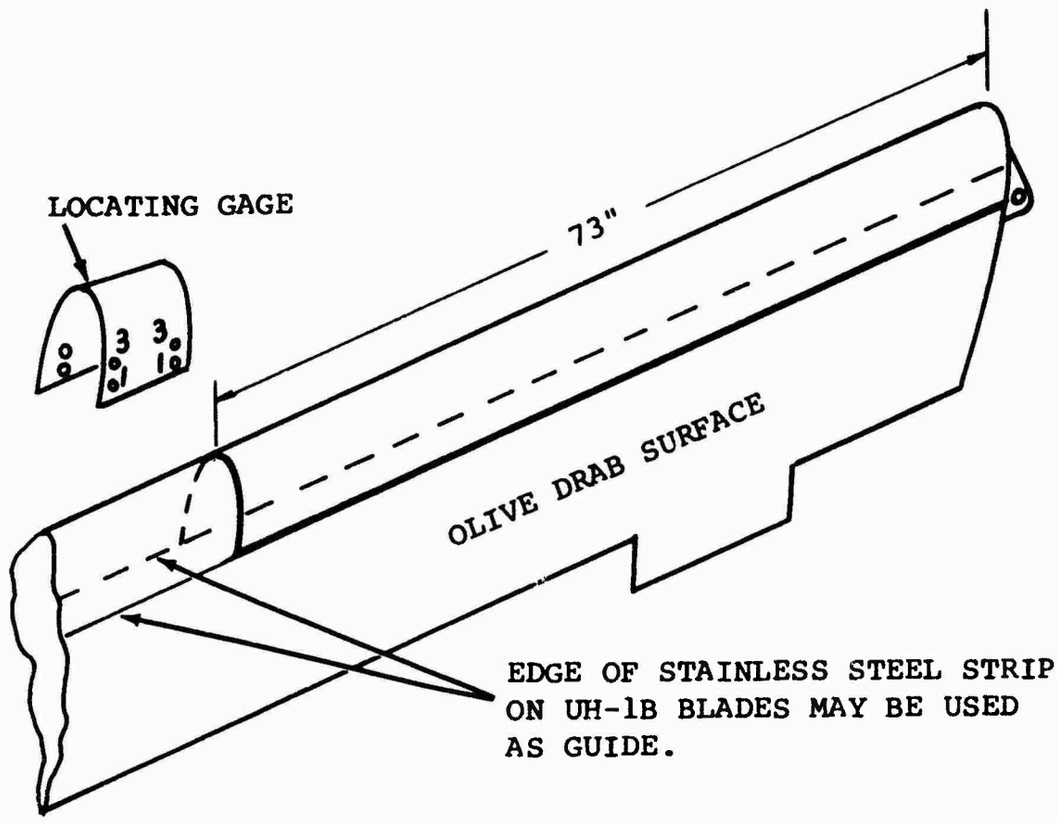

Figure 21. Installation Area

C. Mask off the installation area as shown in Figure 22. Be sure to locate the masking tape inboard and on the trailing edge side of the guide lines.

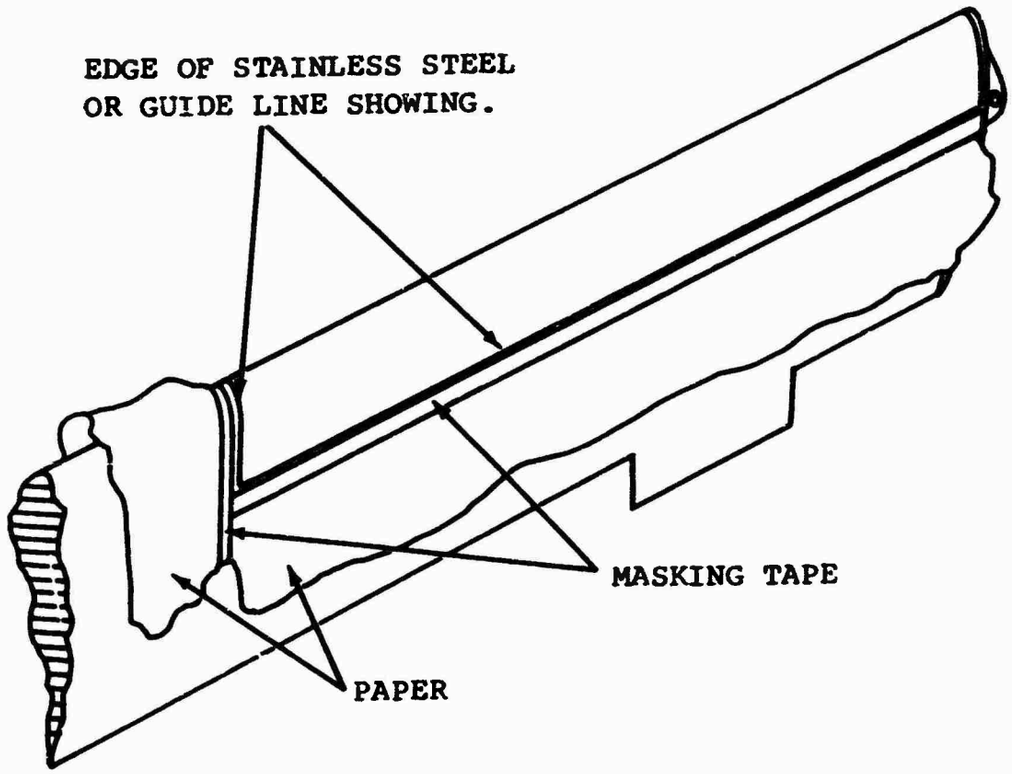

Figure 22. Masking the Installation Area

D. Using gauze moistened with acetone, remove the paint from the rotor blade. If the blade has been flown and shows erosion or corrosion on its leading edge, or in the event the primer undercoating paint layers cannot be removed with acetone, sand the surface in a spanwise direction only. Use Number 80 grit paper first, and use finish sandpaper to remove scratches, Number 320 or finer. The blade surface is considered free of paint when no trace of paint, primer, or dirt appears on a clean, white, acetone-moistened gauze pad when it is wiped over the erosion protection area of the blade.

NOTE: Whenever rotating wire brushes are available, they shall be used to remove corrosion and other contamination from the pitted and

wrinkled stainless steel leading edge. A rotating and/or vibrating sanding machine, equipped with the Para. IV 2 grit paper, may be used to remove the paint prime coats. If the area to receive the erosion protection system contains adhesive or the bonded edges of a previously installed protection system, naphtha can be used to soften the adhesive. Wood chisels may be used to remove the neoprene rubber. Care must be exercised to prevent damage to this metal surface.

E. Remove the paper and masking tape.

F. Using the locating gage, mark off the location of the erosion protection system within the prepared area as shown in Figure 23.

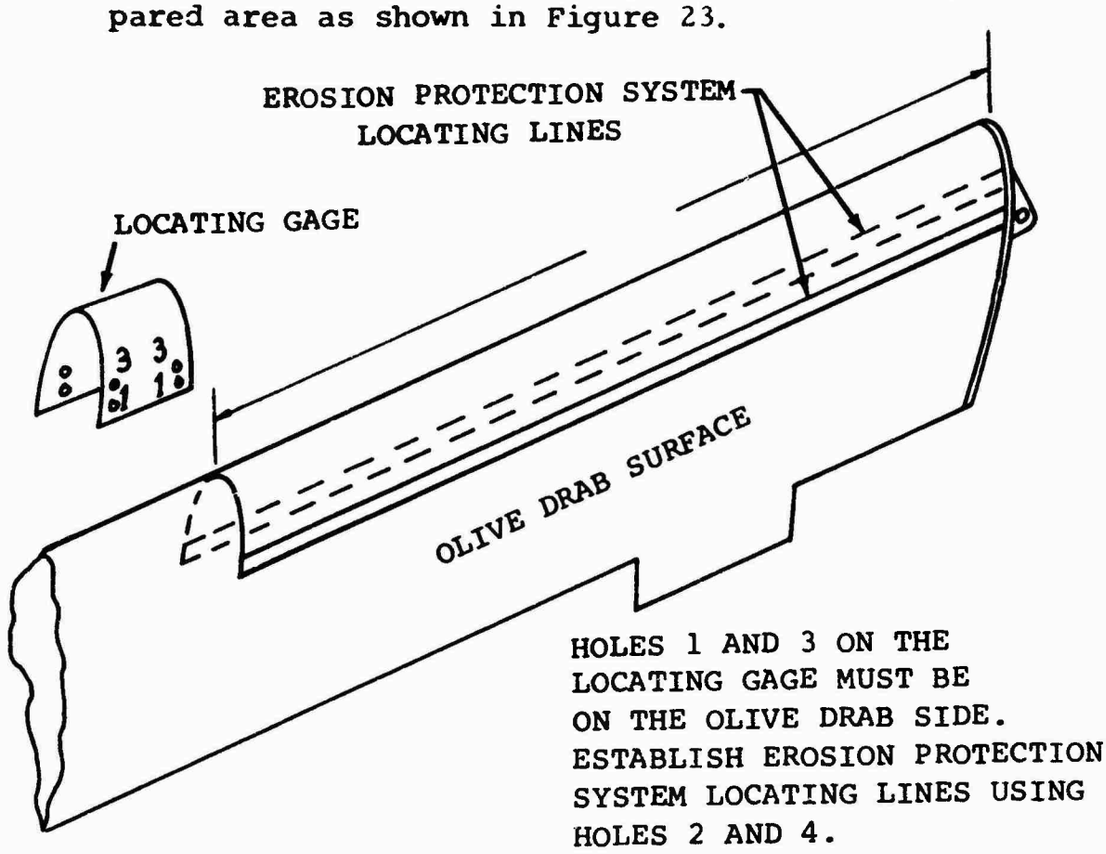

Figure 23. Erosion Protection System Location

G. Apply double-back and paper-back masking tapes to the blade as shown in Figure 24.

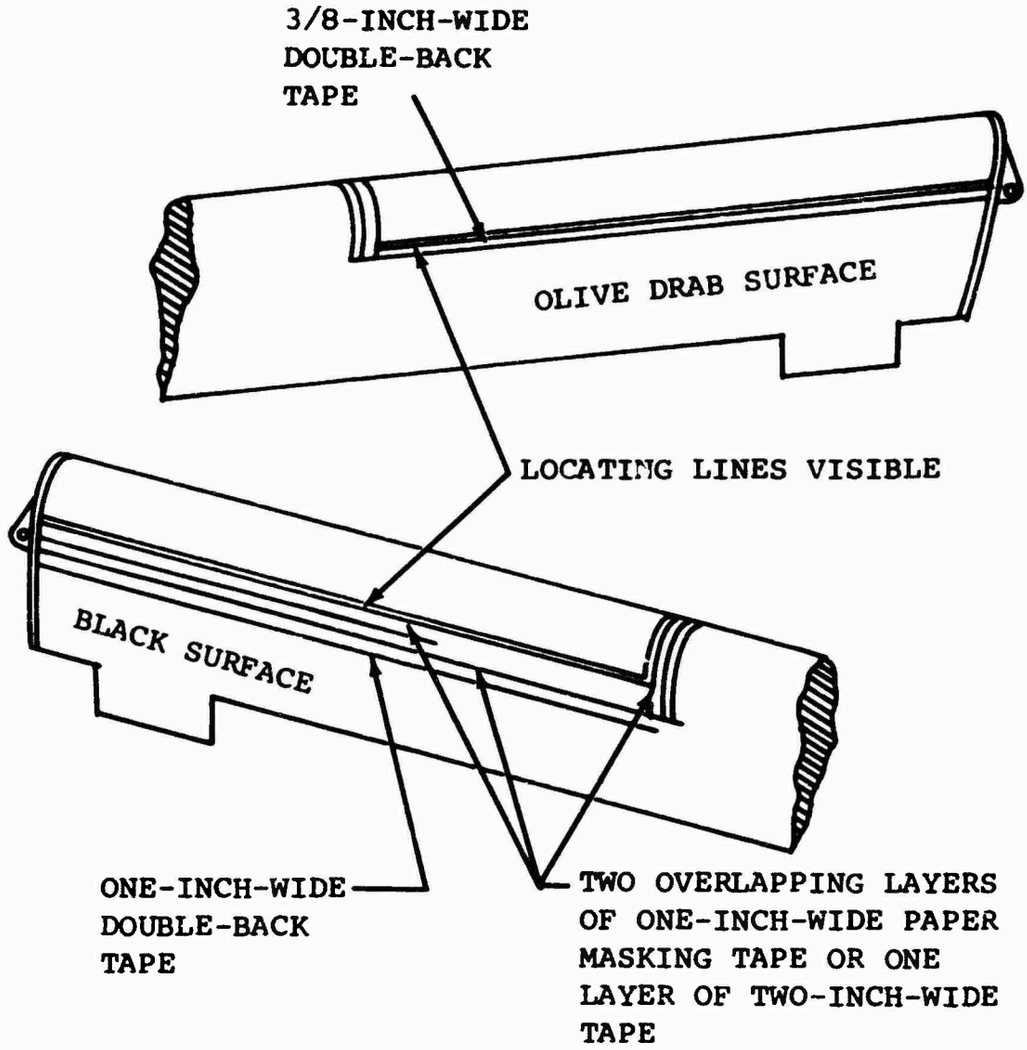

Figure 24. Masking the Erosion Protection Area

H. Position the erosion protection system on the blade with the shiny side out and the thick end butting against the edge of the tip cover. Remove the paper backing from the 3/8-inch double-back masking tape. Using clear cellophane tape, attach the erosion protection system to the 3/8-inch double-back tape as shown in Figure 25.

NOTE: If this operation is performed while the blade is on the helicopter, an additional man is required to hold the erosion protection system in place.

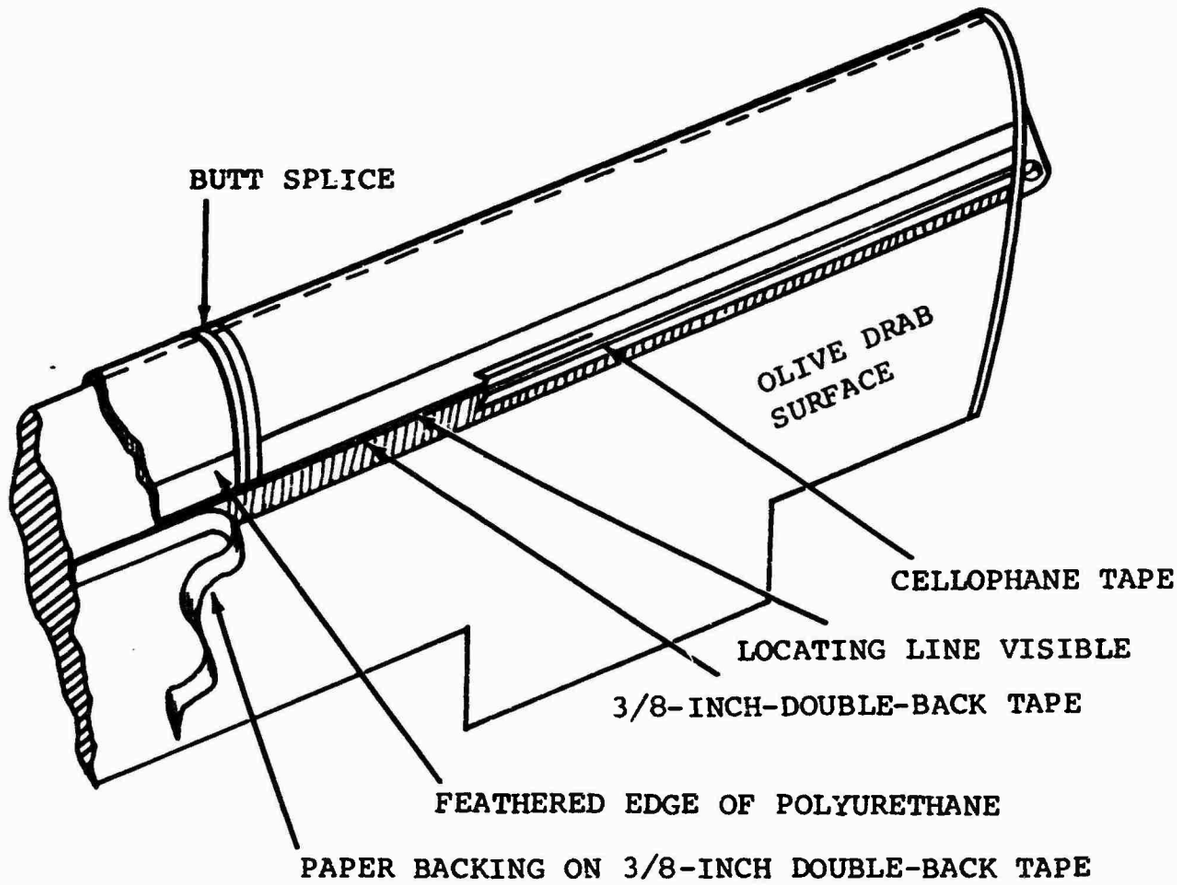

Figure 25. Taping the System in Place

I. Attach the starched cloth to the polyurethane erosion protection system using clear cellophane tape as shown in Figure 26.

J. From this operation until the polyurethane protection system is adhesive bonded in place, the white cotton gloves must be worn. Oil from the hands or any other source can destroy the strength of the adhesive.

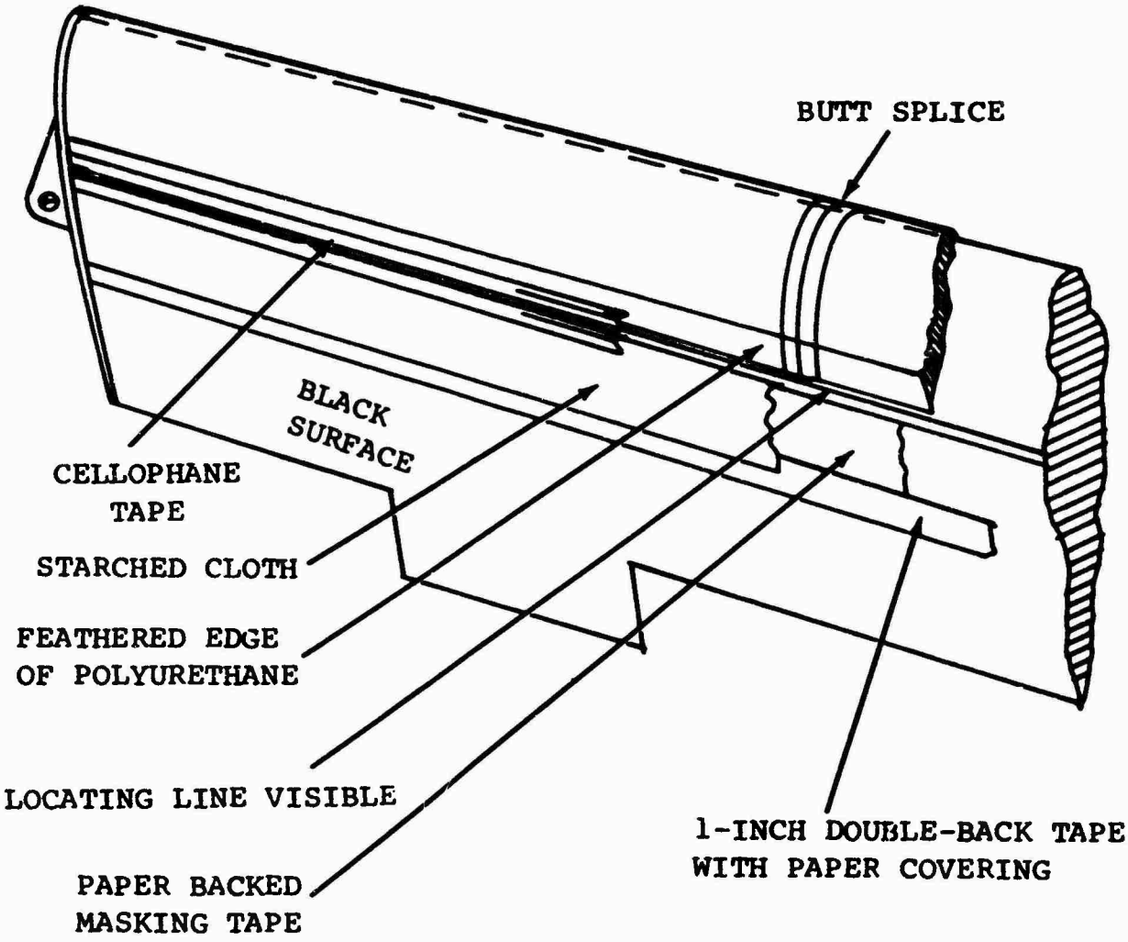

Figure 26. Taping the Starched Cloth in Place

1. Fold the polyurethane erosion protection system back along the olive-drab-colored side of the rotor blade.

2. Clean the blade surface and the dull side of the polyurethane erosion protection system with an acetone-moistened, clean, gauze pad followed by a dry, clean, gauze pad. The dry pad should pick up the acetone from the surface before it evaporates. The surface is considered clean when there is no trace of dirt visible on a clean, white, acetone-moistened gauze pad which has been wiped over the entire bonding surface.

3. The acetone shall be checked for turbidity in the following manner. Mix approx 15 cubic centimeters of acetone and distilled water in a clean glass. If the solution turns to a milky color, the acetone is contaminated and shall not be used. Use only clean acetone which remains clear in this test for the final cleaning operation.

K. The next operations are limited by the working life of the adhesive. The time, beginning when the adhesive is mixed until the time when the erosion protection system is bonded in place, must not exceed 30 minutes. Two men are required for the operations described in Para III K through III O. Do not mix the adhesive or attempt these operations alone. Do not leave the work until the Para III O operation is complete. The epoxy adhesive is self-reactive and will harden in place in a half hour once it is mixed.

1. Pour all of the can of amine hardener (labeled Part B) into the can of epoxy resin (labeled Part A). Mix the adhesive completely, using the wooden stirrer.

2. Apply the mixed adhesive to the metal surface of the blade using the stirrer. If some adhesive falls on the dull side of the polyurethane it is not harmful, but the polyurethane surface should not be coated with adhesive.

L. Score the adhesive using the saw-tooth serrated plastic spreader. Start the spreader at the protection system trailing edge on the olive-drab side of the rotor blade. Move the spreader over the leading edge, finishing on the paper masking tape on the black side of the blade, as shown in Figure 27.

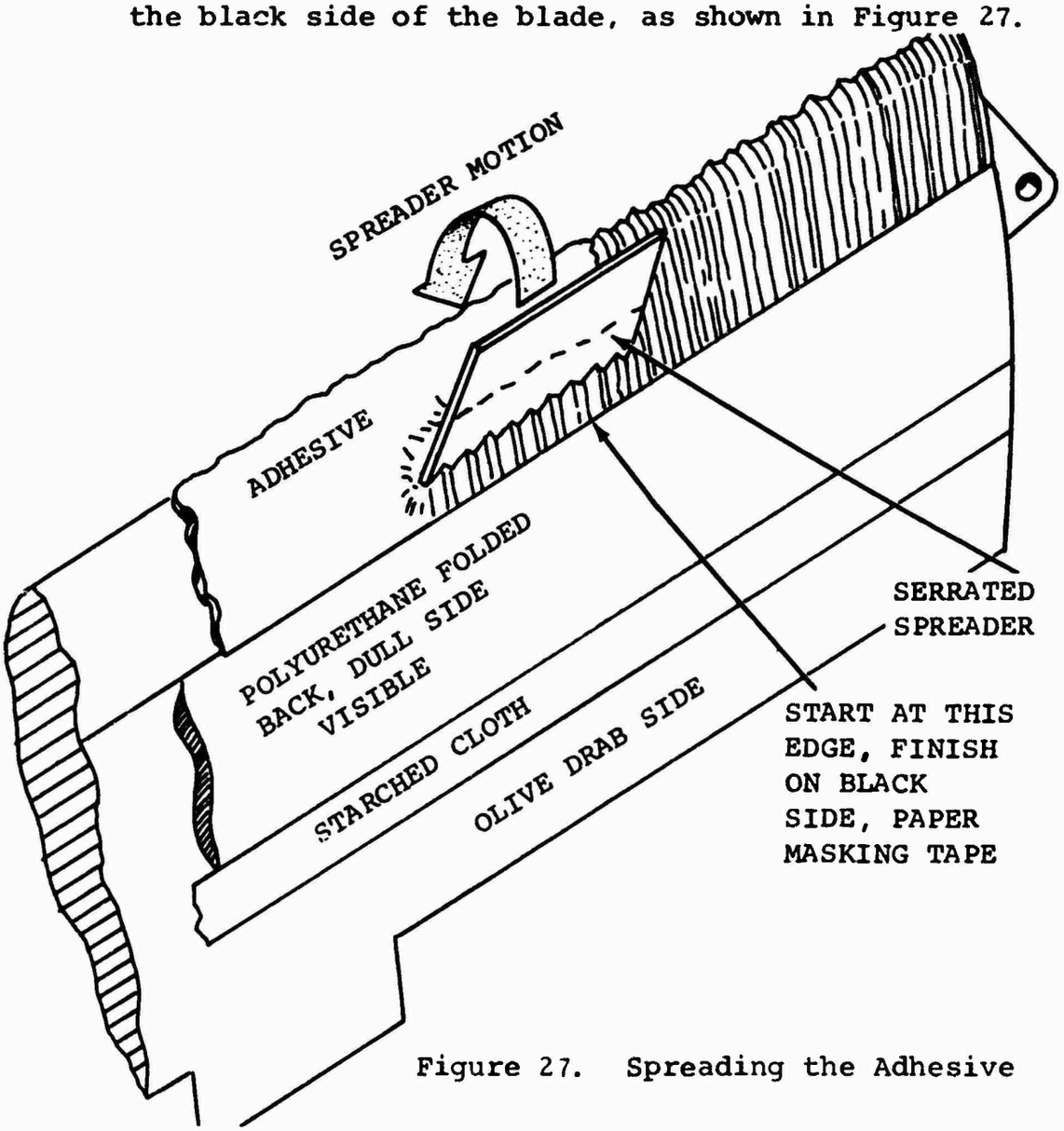

Figure 27. Spreading the Adhesive

M. Place the polyurethane erosion protection system over the leading edge. With both men starting on the olive-drab side of the rotor blade at the trailing edge of the polyurethane center splice, roll out the entrapped air. Push the roller from the trailing edge towards the leading edge. One man works from the center splice to the inboard end, the other man works to the tip end. After the olive-drab side is completed, continue the operation on the black side, pushing the roller from the leading edge towards the trailing edge. Force the excess adhesive under the starched cloth and over the masking tape. See Figure 28.

CAUTION: DO NOT STRETCH THE POLYURETHANE OVER THE MASKING TAPE.

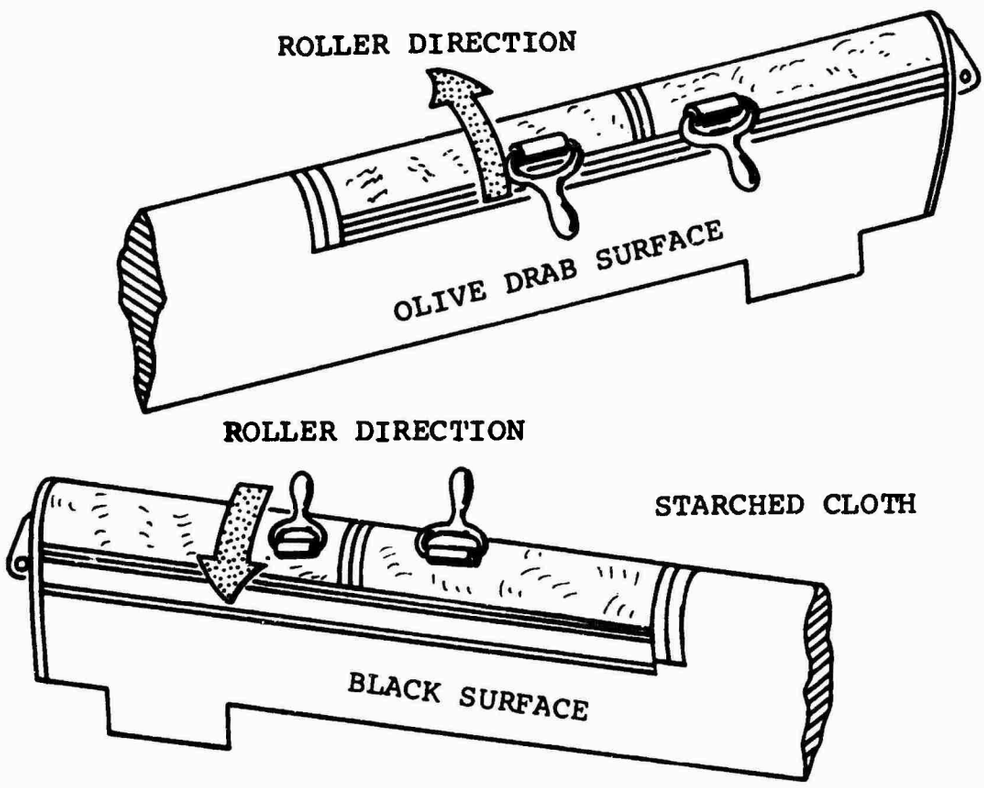

Figure 28. Rolling Out Entrapped Air and Excess Adhesive

N. Attach the starched cloth to the double-back tape after the rolling is complete. If the work is done outdoors, one-inch-wide masking tape should be used to hold the starched cloth to the double-back tape.

O. After the adhesive has become tacky (in approximately one-half hour) remove the masking tapes. Do not forget the clear cellophane tape at the splice. In the event adhesive squeezeout has penetrated the masking, it must be removed with acetone or by sanding with Number 320 or finer grit paper. The excess adhesive may be smoothed by wiping with an acetone-moistened gauze pad after it becomes tacky but before it is fully hardened.

P. There should be approximately one-half inch of exposed metal surface between the polyurethane and the paint. After the adhesive has hardened (in 3 to 4 hours) place one-inch-wide masking tape on the polyurethane and over the paint, letting the exposed metal show. Also, mask the splice (a one-half-inch gap is sufficient). Mask the inboard and tip ends, as shown in Figure 29.

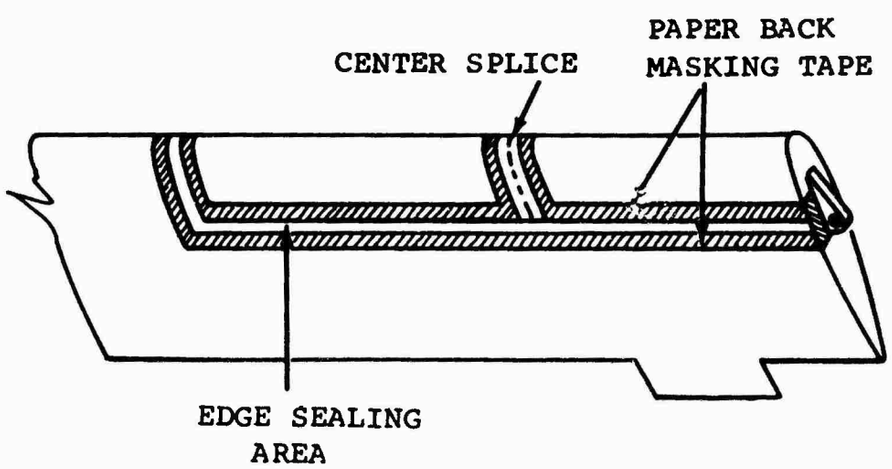

Figure 29. Masking the System for Edge Sealing

Q. Clean the area which will receive the edge-sealant with a clean gauze pad moistened with acetone. Apply one brush coat of GACO N-100-9 primer, permit it to dry for 15-20 minutes, and apply the second coat of primer. Permit the second coat of primer to air dry for 60-70 minutes. Using at least 6 brush coats, apply GACO N-55 black liquid over the primer. Allow at least 15 minutes, but not more than 1 hour, between each brush coat of N-55 material. The black liquid should not extend beyond the primed area. The N-55 may be thinned with N-450-11 up to 10 percent by volume. Jelled N-55 shall not be used. When available, heat lamps shall be used to cure the adhesive. Adjust the lamps so that the heat surface may be touched with the hand without causing a burn. This temperature is approximately 165°F to 180°F. Maintain the temperature for 2 hours. When lamps are not available, the adhesive will cure in approximately 24 hours.

R. After the sealant has dried and the adhesive has hardened for at least 24 hours, remove the masking tape. The blade may be returned to service after the adhesive has had a total of 24 hours of hardening.

IV. Removal

A. Attach a thermometer to the blade using one-inch-wide masking tape.

B. Apply heat lamps or hot-air blowers until the blade reaches 185°F to 200°F. DO NOT EXCEED 200°F.

C. While the surface is hot, remove the polyurethane, using an aluminum or plastic chisel. If the adhesive remains on the metal surface of the blade, reheat as in Paragraph IV B above, and remove it with the aid of an aluminum or plastic chisel.

D. Small amounts of adhesive may be removed by sanding with Number 320 or finer grit paper.

E. Mask the painted areas of the blade using 1-inch-wide masking tape and 1-inch-wide paper.

F. The edge-sealer may be removed by wiping with an acetone- or naphtha-moistened gauze pad.

G. Remove the masking tape and paper.

H. If replacement of an erosion protection system is the reason for removal, the systems shall be replaced in equal-weight pairs on opposing rotor blades. As an alternate method for removal, the polyurethane may be slit spanwise along the leading edge. Care must be taken not to mar the stainless steel. Using plastic chisels the protection system may be removed from the blade.

Repair

A. Rotor blades on which the erosion protection systems have been repaired may be returned to service only after the adhesive has hardened for a 24-hour period.

B. Enclosed bond voids or bubbles may be repaired as follows:

1. Puncture the void with a hypodermic needle in two places near the edge of the void to permit entrapped air to escape.

2. When the adhesive is packaged into preweighed units, mix all the hardener into the resin. If small quantities are desired, mix the adhesive in the following proportions by weight:

(a) EPON 934: 100 parts of resin (Component A) to 33 parts of hardener (Component B)

(b) EPON 828/DTA*: 100 parts of EPON 828 to 10 parts of DTA

3. Fill the hypodermic syringe and inject the adhesive into the void.

Note: EPON 828/DTA is best suited for use with the hypodermic syringe.

C. Loose edges may be repaired as follows:

1. Mask the polyurethane and painted areas adjacent to the loose edge using one-inch-wide masking tape.

2. Remove the edge-sealer in the affected area per paragraph IV F.

3. Remove loose grit paper by carefully sanding with Number 320 or with finer adhesive.

4. Clean the polyurethane and blade surface per paragraph III J (2).

5. Mix the adhesive per paragraph V B (2) and rebond the loose polyurethane.

6. One-inch-wide masking tape may be used to hold the edge in place while the adhesive hardens. Treat the repaired area per paragraphs III O through III R.

D. Patches shall be limited to one per erosion protection system, and no patch shall be longer than 18 inches in the spanwise direction. Damage which cannot be covered by an 18-inch-long patch requires

*DTA = Diethylenetriamine

replacement of the erosion protection system. Whenever replacement is necessary, the systems shall be replaced in equal-weight pairs on opposing rotor blades. Patches shall be applied as follows:

1. Trim the damaged and loose polyurethane as shown in Figure 30.

2. Cut a replacement section of polyurethane the same size as the trimmed area.

3. Mask the paint and polyurethane around the trimmed area using one-inch-wide masking tape and paper. Remove excess adhesive and edge-sealer from the metal per paragraph IV A through IV G.

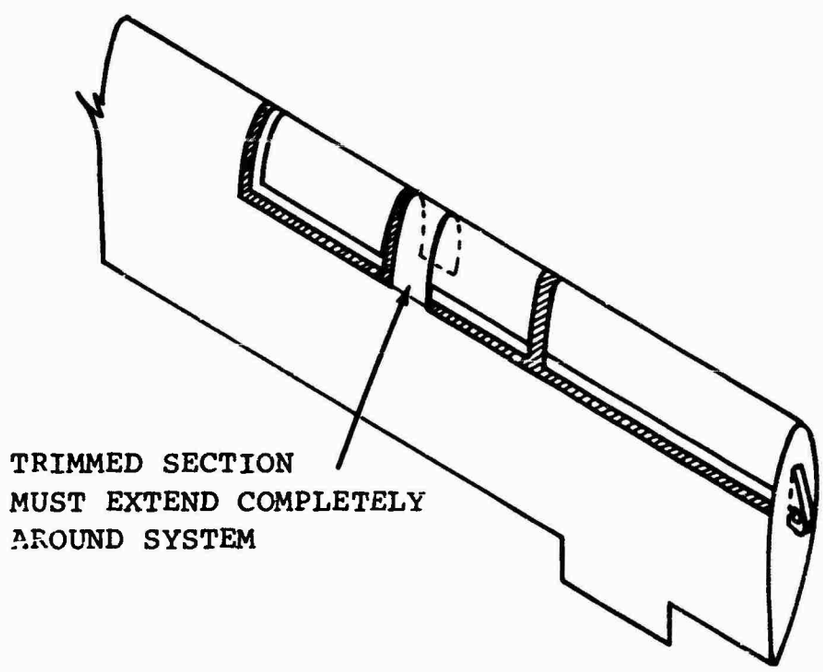

Figure 30. Removing Damaged Portion

4. Clean the faying surfaces, mix the adhesive, and bond the patch in the manner used to install the system, following paragraphs III D through III O. Clear cellophane tape may be used to hold the patch at the butt-splice edges.

5. After the adhesive has hardened for at least 8 hours, sand the butt-splice edges until there is no step between the original polyurethane and the patch.

6. Complete the repair by applying edge-sealer per paragraph III P through III R, making sure to apply edge-sealer to the butt-splice edges.