604334

RADC-TDR-64-178

TEST AND EVALUATION REPORT ON LOG-PERIODIC ANTENNA GROUP AN/TSA-17( )

Adolph J. Uryniak

TECHNICAL DOCUMENTARY REPORT NO. RADC-TDR-64-178

June 1964

Communications Techniques Branch
Rome Air Development Center
Research and Technology Division
Air Force Systems Command
Griffiss Air Force Base, New York

System 412L

COPY 2 OF 3
HARD COPY $. 2 00
MICROFICHE $. 0 50
.30p

When US Government drawings, specifications, or other data are used for any purpose other than a definitely related government procurement operation, the government thereby incurs no responsibility nor any obligation whatsoever; and the fact that the government may have formulated, furnished, or in any way supplied the said drawings, specifications, or other data is not to be regarded by implication or otherwise, as in any manner licensing the holder or any other person or corporation, or conveying any rights or permission to manufacture, use, or sell any patented invention that may in any way be related thereto.

Qualified requesters may obtain copies from Defense Documentation Center.

Defense Documentation Center release to Office of Technical Services is [redacted] authorized.

Do not return this copy. Retain or destroy.

Key Words: Antenna, log periodic, horizontal; Antenna, quickly erectable; Antenna, lightweight, transportable.

ABSTRACT

A 2.5 kw Peak Envelope Power (PEP) non-rotatable restricted height, lightweight, transportable, quickly erectable antenna in the 2-30 mc region using the log periodic principle, has been developed for TAC application. The antenna, nomenclatured AN/TSA-17, can be erected in less than two hours by 5 men. The disassembled antenna array is packaged in three carrying cases and the dismantled supporting towers are nested in three bottom 10-foot sections. Total antenna weight is 850 pounds.

Test results indicate the AN/TSA-17 is suitable for TAC use and wherever a lightweight transportable antenna is required.

PUBLICATION REVIEW

This report has been reviewed and is approved.

Adolph J. Uryniak

Approved: ADOLPH J. URYNIAK
HF & Wire Unit
Implementation Section
Communications Techniques Branch

G. E. Brunette

Approved: GEORGE E. BRUNETTE
Actg Chief, Communications Techniques Branch
Communications Division

FOR THE COMMANDER: Irving J. Gabelman

IRVING J. GABELMAN
Chief, Advanced Studies Group

AIR FORCE, GOODWAY PRINTING CO., PHILADELPHIA, PA., 7/30/64, 194

TABLE OF CONTENTS

		Page
1.	INTRODUCTION	1
2.	DESCRIPTION	1
3.	QUICK REFERENCE DATA	5
4.	TEST RESULTS AND COMMENTS	7
5.	CONCLUSIONS	8
6.	TESTS CONDUCTED, PROCEDURES AND RESULTS	8
	a. Pattern and Gain	13
	b. Group Erection	13
	c. Measured Weight	14
	d. Bounce and Shock	15
	e. Power Handling	15
	f. Group VSWR	16
	g. Impedance	17
	h. Balun	18
	(1) VSWR	18
	(2) Impedance	21
REFERENCES		23

LIST OF ILLUSTRATIONS

		Page
1.	Sketch of the AN/TSA-17	1
2.	Antenna Group Before Erection	2
3.	Antenna in Stored Condition	3
4.	Closeup of 40-foot Antenna in Transportable Condition Showing Nested Antenna Spreader "A" and Tower Panels	3
5.	Schematic of Log-Periodic Pole Antenna	4
6.	Polar Chart E-Plane Pattern Taken on the 1/30 Scale Model at 129 mc	9
7.	Polar Chart H-Plane Pattern Taken on the 1/30 Scale Model at 171 mc	10
8.	Polar Chart H-Plane Pattern Taken on the 1/30 Scale Model at 334 mc	11
9.	Polar Chart E-Plane Pattern Taken on the 1/30 Reference Dipole at 156 mc	12
10.	Power Handling Test Setup	15
11.	Group VSWR Test Setup	16
12.	Unbalanced Bridge Connection for Antenna Impedance Measurements	18
13.	Corrected VSWR (50 ohm) vs Frequency Curve	19
14.	Sample Smith Chart of Engineering Prototype Impedance	20
15.	Balun VSWR Test Connections	20
16.	Balun Impedance Test Connections	21

TEST AND EVALUATION REPORT
ON
LOG-PERIODIC ANTENNA GROUP AN/TSA-17( )

1. INTRODUCTION

In order to satisfy a TAC requirement for a transportable, lightweight quickly erectable antenna the AN/TSA-17 Log Periodic Antenna covering the 2-30 mc region was developed by Collins Radio under Contract AF 30(635)-33398. The contract was awarded December 1962 and the first article was tested in July 1963. Delivery of final articles commenced in October 1963 and was completed in December 1963.

2. DESCRIPTION

The antenna consists of two rear 70-foot guyed towers, a front 40-foot guyed tower and a catenary which supports the antenna elements. A ferrite balun transformer which transforms the balanced 200-ohm input impedance of the antenna to yield a 50-ohm unbalanced input impedance is mounted on the front tower. Figure 1 is a sketch of the antenna.

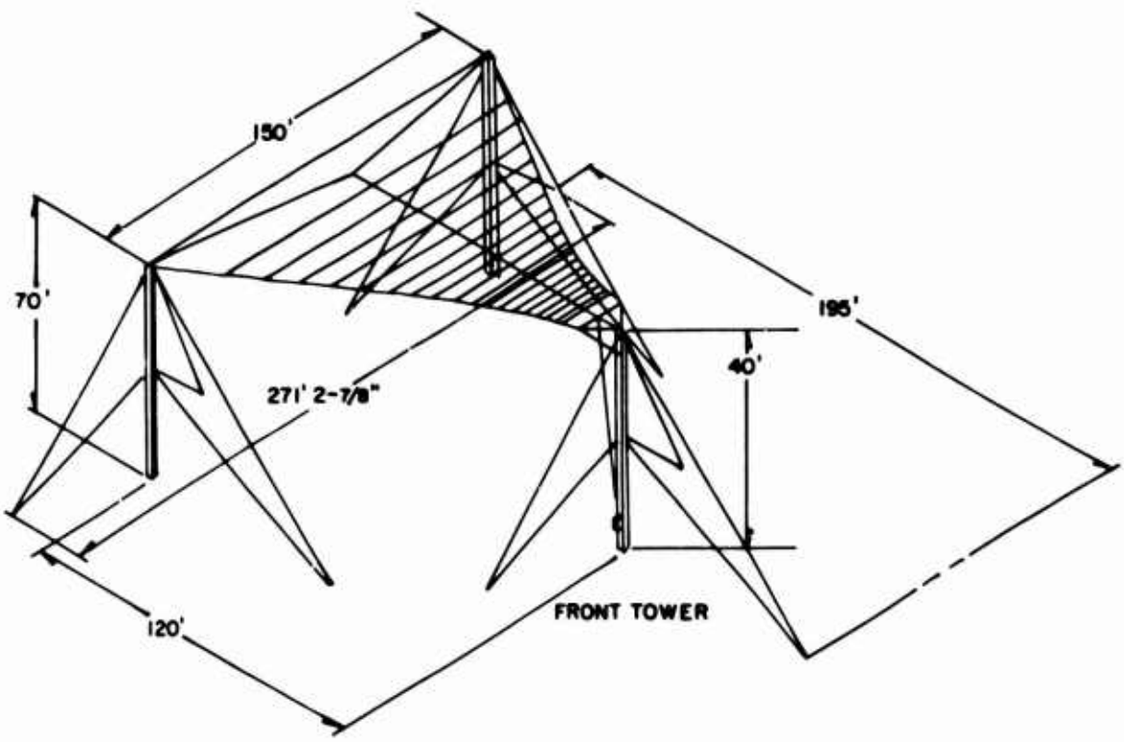

Figure 1. Sketch of the AN/TSA-17

In its transportable form the antenna is broken down into three square bottom tower sections which act as transit cases for the dismantled triangular sections, and three cases which house the antenna elements, catenary, tag lines, erection tools and RF cable. The total weight of the antenna is 850 pounds. See Figures 2, 3 and 4.

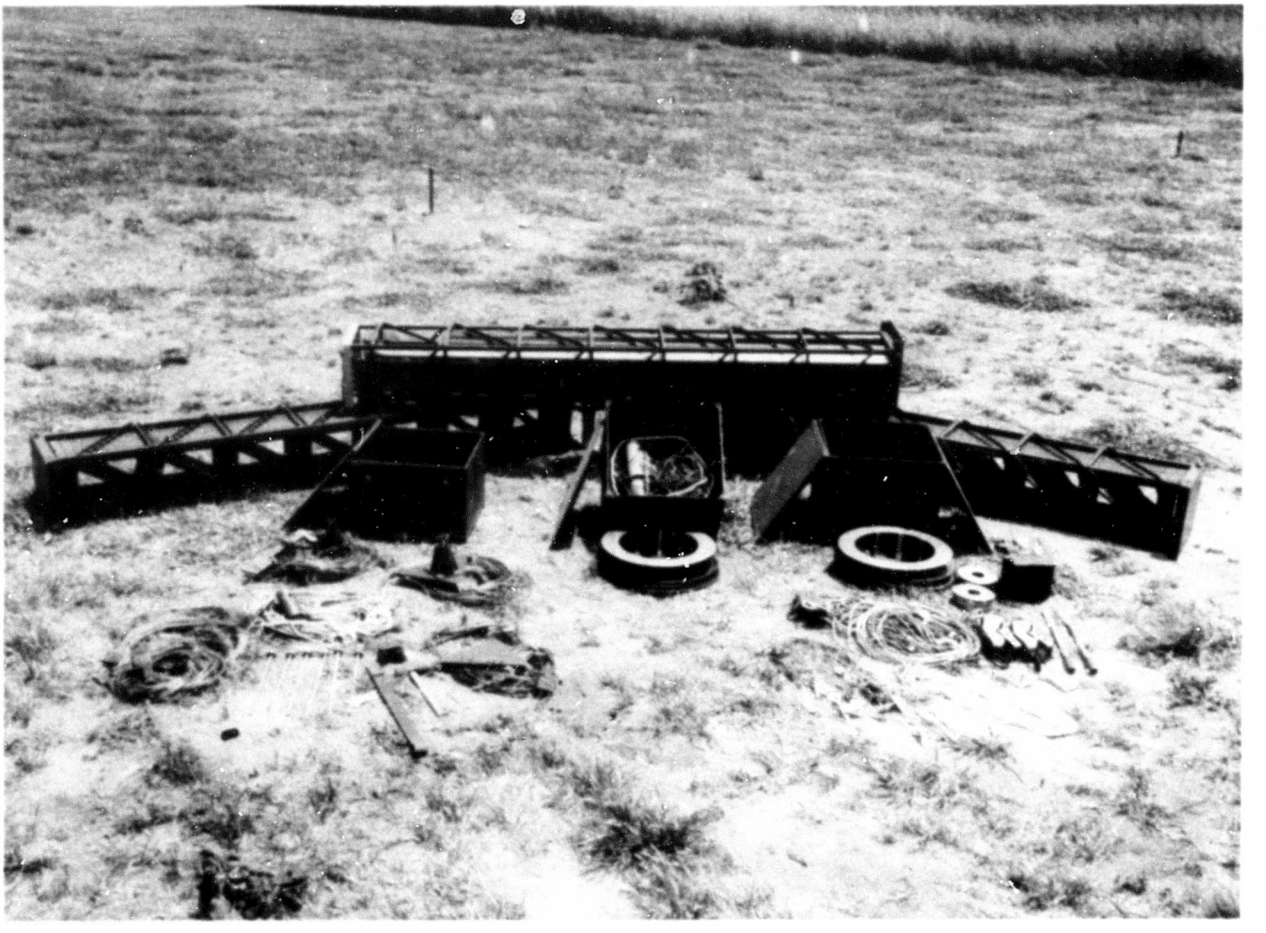

Figure 2. Antenna Group Before Erection

The AN/TSA-17 is a horizontally polarized HF logarithmically-periodic dipole array antenna. The log-periodic antenna exhibits relatively constant characteristics that vary periodically with the logarithm of the frequency over a wideband of frequencies, 2-30 mc in this case. The log-periodic antenna was first introduced by R. H. DuHamel and D. E. Isbell[1] who presented the theoretical aspects underlying the broadband characteristics and included a limited discussion concerning the mechanics of the radiation properties of the antenna.

The theory of operation, substantiated by measurements describing radiation properties of a log periodic antenna is presented in a technical memorandum by R. L. Bell, C. T. Elfving, and R. E. Franks.[2] They show that the antenna

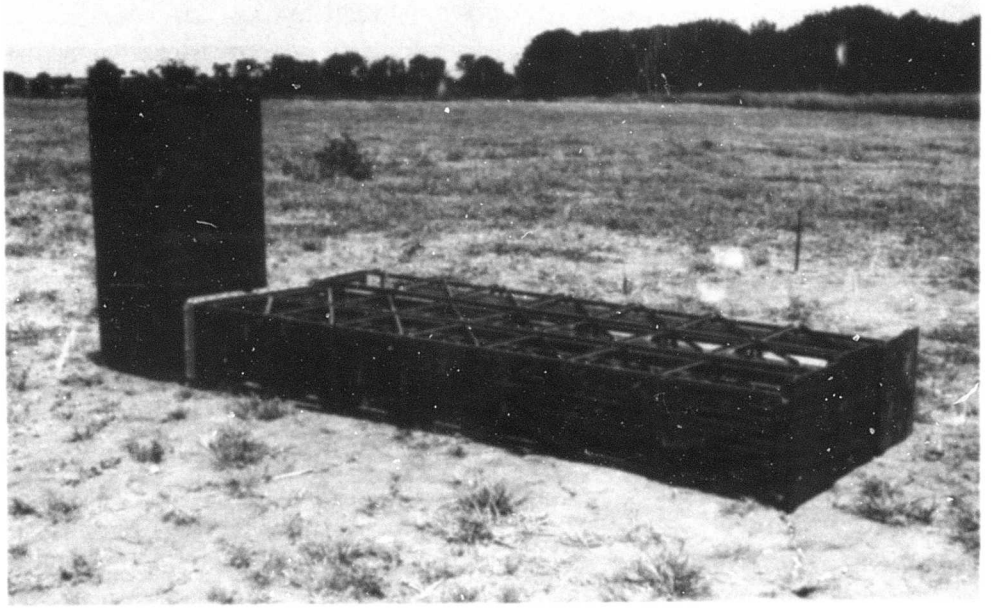

Figure 3. Antenna in Stored Condition

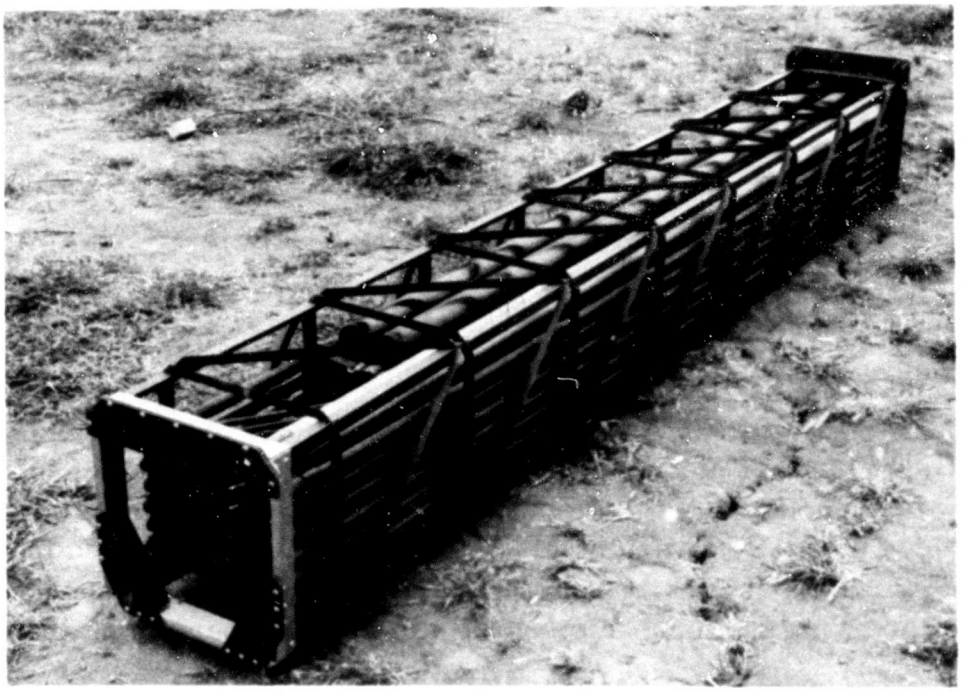

Figure 4. Closeup of 40-foot Antenna in Transportable Condition Showing Nested Antenna Spreader "A" and Tower Panels

supports a transverse electromagnetic (TEM) transmission wave which launches the far field radiation wave. The TEM wave terminates in an active region consisting of five elements within the antenna and centered around the 1/2 λ long resonant element. Due to the direction, magnitude, and phase relationship of the current and electric distribution on the elements within this region, a radiation field is enhanced and propagated in the reverse direction of the transmission line wave. The extremely wide bandwidth operation is due to the selected antenna design and geometry. Figure 5 is a schematic of a log-periodic dipole antenna.

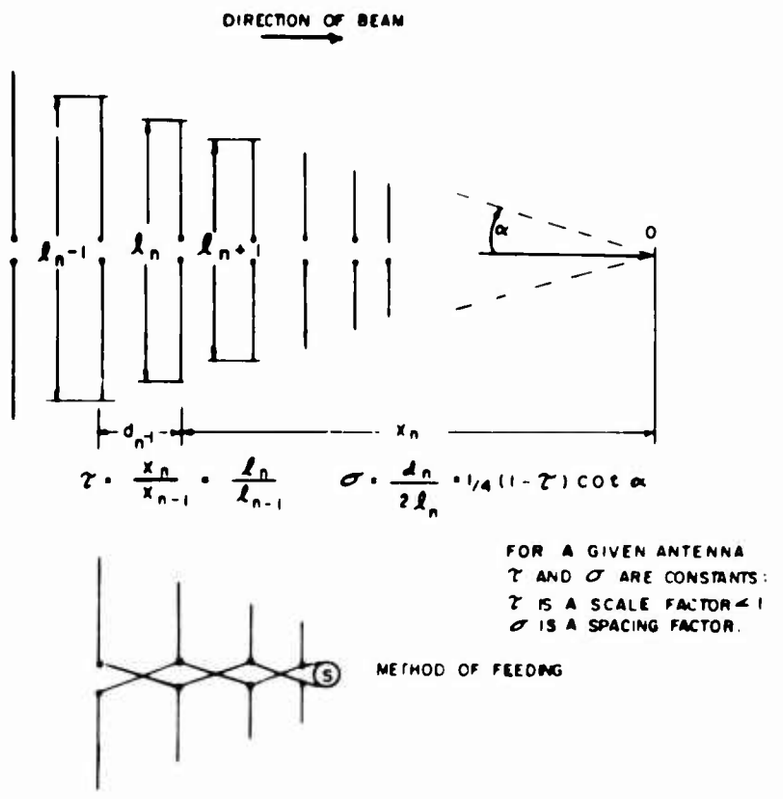

Figure 5. Schematic of Log-Periodic Pole Antenna

In another report R. L. Carrel[3] presents an analysis and design of the log-periodic dipole. It includes a mathematical analysis which takes into account mutual coupling between dipole elements. Input impedance, directivity, bandwidth, input current and voltage on several elements are calculated. A new concept, the active region bandwidth is formulated and used to relate the operating bandwidth of the antenna and size of the antenna. A step-by-step procedure is presented which enables one to design a log-periodic dipole antenna over a wide range of size, bandwidth input impedance and directivity.

The geometry of the AN/TSA-17 antenna is chosen so that the free-space radiation pattern and input impedance vary periodically with the logarithm of the frequency over the 5 to 30 mc range. Operation below 5 mc is achieved by

loading the last element of the dipole array. Antenna performance below 5 mc is degraded in that the beamwidth will broaden and the efficiency will decrease. Operation above 5 mc will not be distorted by this loading. In this way the antenna will be a very wide band unit and will operate in the 2-30 mc range with the same size structure required for frequency independent operation from 5 to 30 mc.

A unique feature of the antenna is the tower construction. Compared to other tower designs unique advantages are gained. In the type of triangular tower design in which all panels of the tower are permanently connected, the sections have the same dimension and must be laid side by side during transport, making the overall package large. Another design uses nested sections which decrease in size, making all sections different. This design has mechanical disadvantages. All triangular sections of the AN/TSA-17 are similar. Each 10-foot section is dismantled into three panels which are slid into the bottom square section of the tower which acts as a transit case. (See Figure 4.) In its nested form the complete tower weighs 118 pounds and occupies a volume of approximately 22" x 22" x 10'. This type of construction yields a noteworthy saving of valuable space in any tactical vehicle.

Another unique feature is the size of the antenna. The antenna has the same size as a structure for use in the 5-30 mc region, but has the electrical capability of operating in the 2-30 mc region. However, as noted above, 2-5 mc is degraded but acceptable.

The third feature is the use of an air-cooled, oil-filled balun transformer which transforms the balanced 200-ohm antenna into an unbalanced 50-ohm input. This type of construction results in a small unit which weighs approximately 17 pounds.

The antenna is capable of 2.5 kw PEP operation. Type H and HN connectors are supplied for greater versatility.

3. QUICK REFERENCE DATA

a. Electrical Characteristics

- Frequency independent operation 5-30 mc
- Degraded performance 2-5 mc

NOTE: The remaining specifications are quoted for the 5-30 mc range except where stated differently.

- Half-power frequency space beamwidth

E-plane	60 ± 10 degrees
H-plane	110 ± 15 degrees

- Elevation plane angle of the first beam maximum

At 5 mc	40° ± 10 percent
At 30 mc	6° ± 10 percent

- Directive free space gain over an isotropic radiator

  Nominal 7 db
  Input impedance 50 ohms (unbalanced)

- Standing wave ratio with respect to 50 ohms

2-30 mc	less than 2:1

- Power-handling capabilities — 2.5 kw (PEP)
- Front to back ratio — 12 db or better
- Polarization — horizontal

b. Mechanical Specifications

• Wind and free loads	66 knot wind, no ice (80 mph) 44 knot wind with 1/4-inch radial ice (50 mph)
• Number and height of towers	2-70 feet 1-40 feet
• Total length of erected structure	240 feet
• Total width of erected structure	250 feet
• Weight of group including transit cases, erection tools, etc.	850 pounds
• Weight of collapsed 70-foot tower section	118 pounds

- Weight of collapsed 40-foot tower section (includes "A" frame, antenna spreader) — 132 pounds
- Weight of transit cases — 154, 165, and 153 pounds
- Group erection time — 5 men, less than 2 hours

NOTE: The above does not include anchor driving time which varies from three to five minutes, depending on local soil condition.

4. TEST RESULTS AND COMMENTS

A group of first article tests was conducted at the contractor's plant to determine compliance of the AN/TSA-17 with Specification MIL-A-27140(USAF). Test data was evaluated by Rome Air Development Center. Results were satisfactory for patterns, gain, group erection, bounce and shock, power handling, group VSWR, impedance and balun tests. Component part samples of the antenna such as element assembly, tower assembly guy, wind curtain sheaves assembly and termination assembly were subjected to low-temperatures/high-temperatures and salt fog tests. Results were satisfactory.

In lieu of actual wind and ice tests required by MIL-A-27140(USAF), calculations to verify the ability of the AN/TSA-17 Antenna to withstand the specified conditions of 66 knot wind or 44 knot wind and 1/4-inch of radial ice were submitted. These were verified by RADC engineers as acceptable.

The measured weight of the antenna group exceeded the requirements of the specifications (825 pounds) by 15 pounds. Some saving in weight could be made by removing one of two winches; however, time of erection, safety and ease of erection would be impaired.

In order to enhance the erection of the antenna, the two winches will be retained and a 4-pound hammer will be replaced by an 8-pound unit. The total weight will be 850 pounds.

The antenna VSWR results were well within requirements. The specifications are - not greater than 2.1 over the frequency range of 6 through 30 mc; 2.5:1 in the 5-6 mc range; and 3:1 in the 2-5 mc range. Test results showed a maximum VSWR of 2.02:1 at 2.64 mc and 2.26:1 at 30 mc.

5. CONCLUSION

Test results indicate the AN/TSA-17 Antenna Group is suitable for TAC use and for use in the Air Force or any other military branch where a lightweight transportable antenna is required.

6. TESTS CONDUCTED, PROCEDURES AND RESULTS

For the purpose of this report only sample test results with comments are given in some cases. Complete data is available at RADC.

E- and H-plane patterns were recorded on polar charts from a 1/30 scale model antenna with a ferrite balun mounted at the feed point.

H-plane array patterns were recorded on polar charts. A 1/30 scale model antenna was arrayed with its perfect ground image. The apexes of the antennas were connected in parallel with two 1/4-inch diameter tubes. A ferrite balun was mounted at the center point of the tube. The antennas were phased electrically so that cancellation occurred in the plane of the horizon.

The ferrite balun and connecting tubes were removed from the array and an infinite balun feed was installed in each of the two antennas. These were then fed with coaxial lines of equal electrical length.

Frequencies used in the above measurements are listed in the 60-207 mc range. E- and H-plane patterns were recorded from one of the 1/30 scale models with an infinite balun for the frequencies listed from 228-952 mc. With the scale model arrayed with its perfect ground image and (two antennas) fed with infinite baluns and equal length coaxial lines, H-plane patterns were recorded for frequencies listed from 225 and 952 mc. E-plane reference patterns were recorded on 1/2 λ dipoles at 156, 144 and 787 mc. Front to back ratios and E- and H-plane half-power beamwidths were recorded on data sheets for each of the frequencies tested.

Figures 6, 7, and 8 are samples of E- or H-plane patterns taken on the 1/30 scale model at 129 mc, 171 mc, and 334 mc. Figure 9 is an E-plane pattern taken on a reference 1/30 dipole at 156 mc.

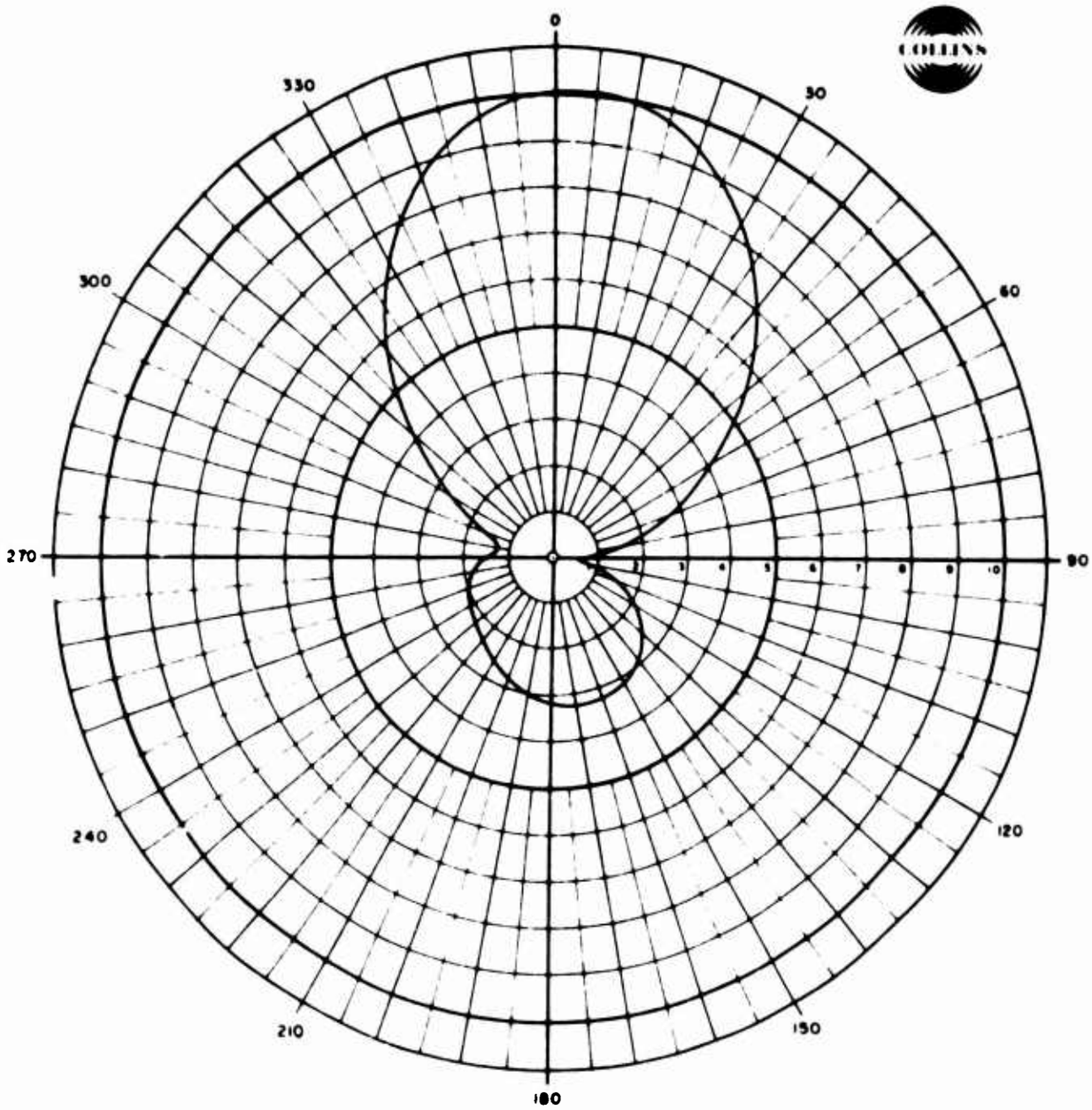

ANTENNA: TSA-17 PATTERN NO.: 9D
POLARIZATION: E CUT: ϕ= θ= DATE: 6-29-63
REMARKS: Ferrite Balun FREQUENCY: 129

Figure 6. Polar Chart E-Plane Pattern Taken on the 1/30 Scale Model at 129 mc

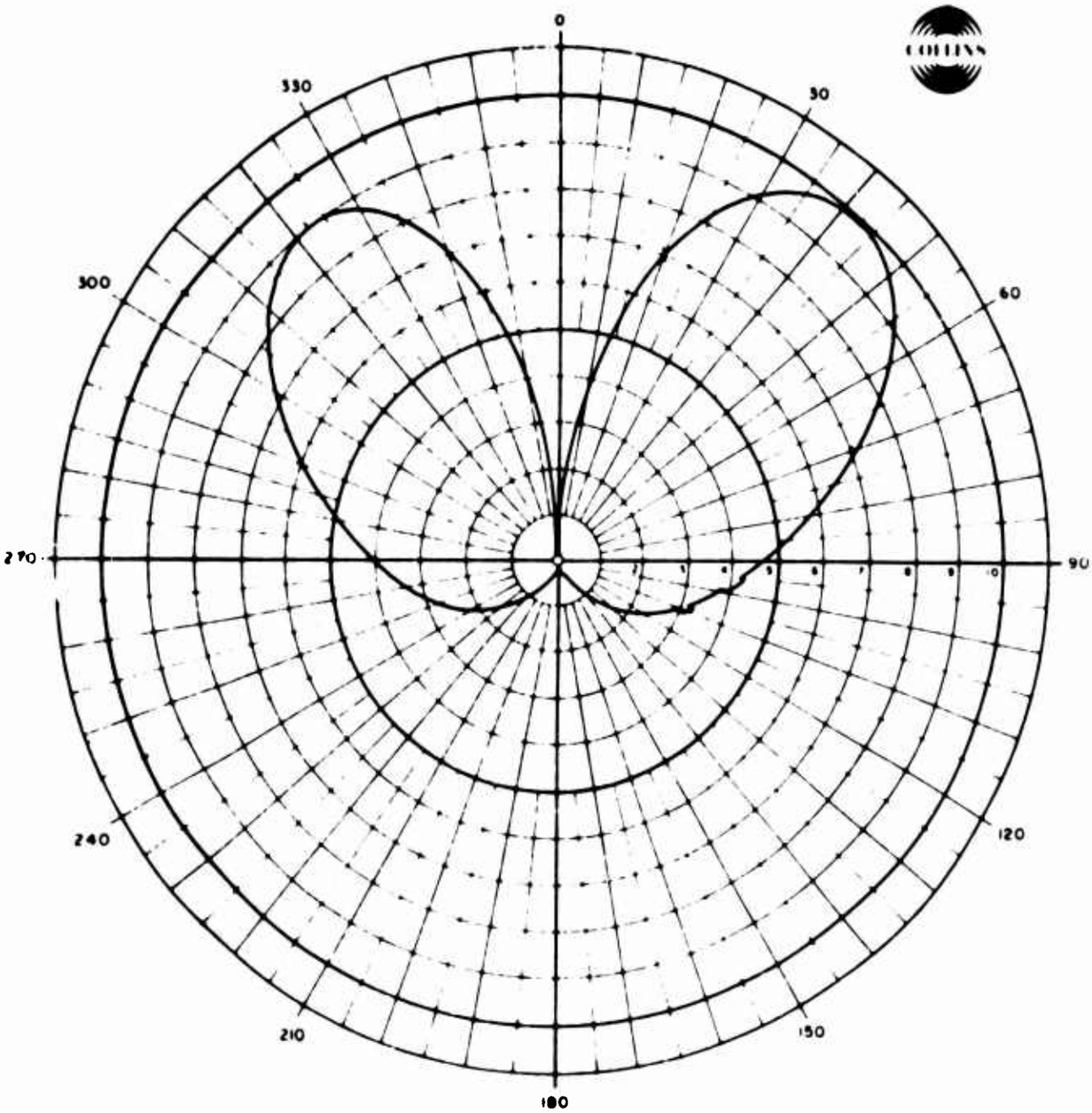

Figure 7. Polar Chart H-Plane Pattern Taken on the 1/30 Scale Model at 171 mc

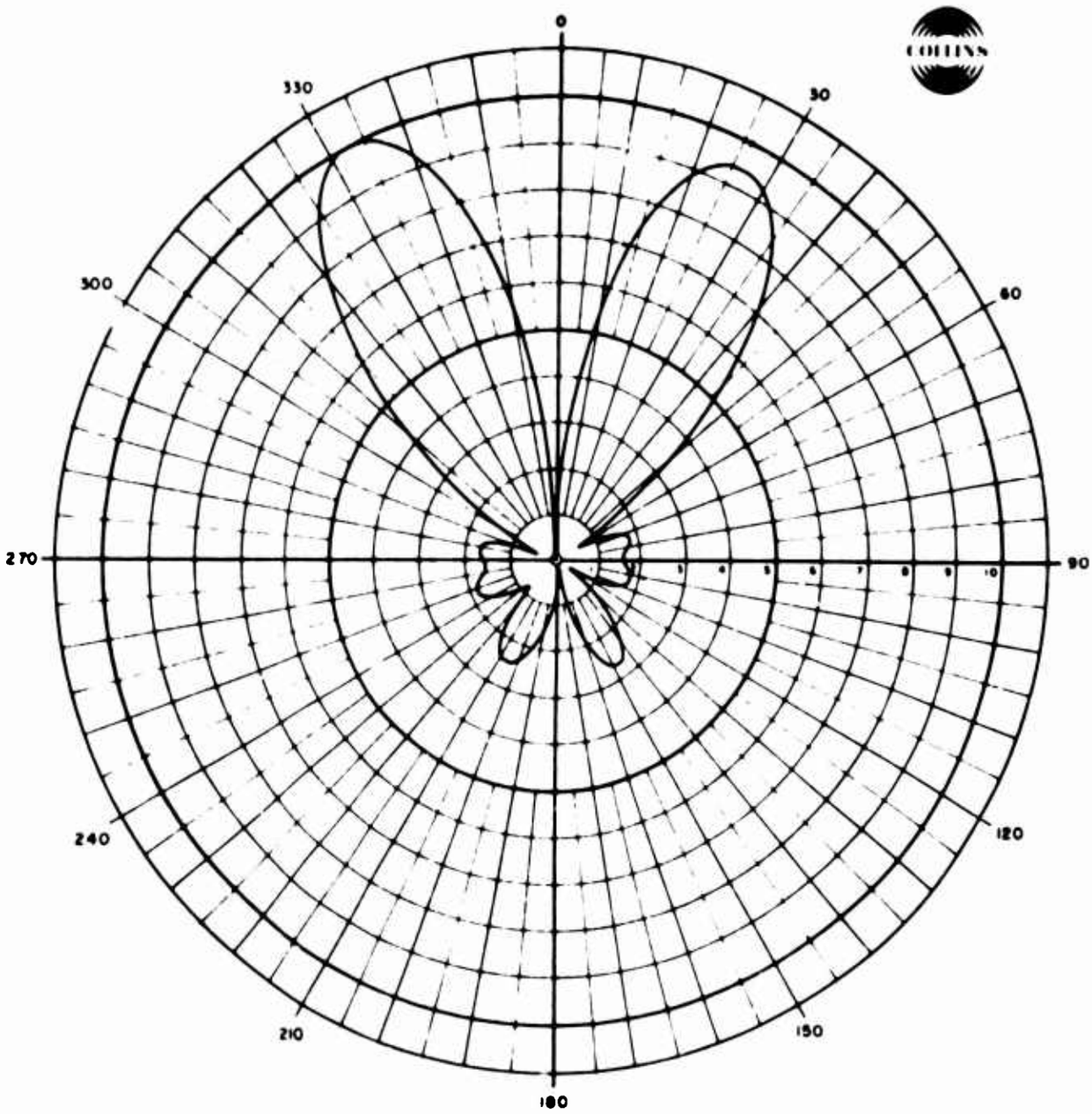

ANTENNA: TSA-17 PATTERN NO.: 9A
POLARIZATION: H CUT: ϕ= θ= DATE: 6-27-63
REMARKS: Infinite Balun FREQUENCY: 334

Figure 8. Polar Chart H-Plane Pattern Taken on the 1/30 Scale Model at 334 mc

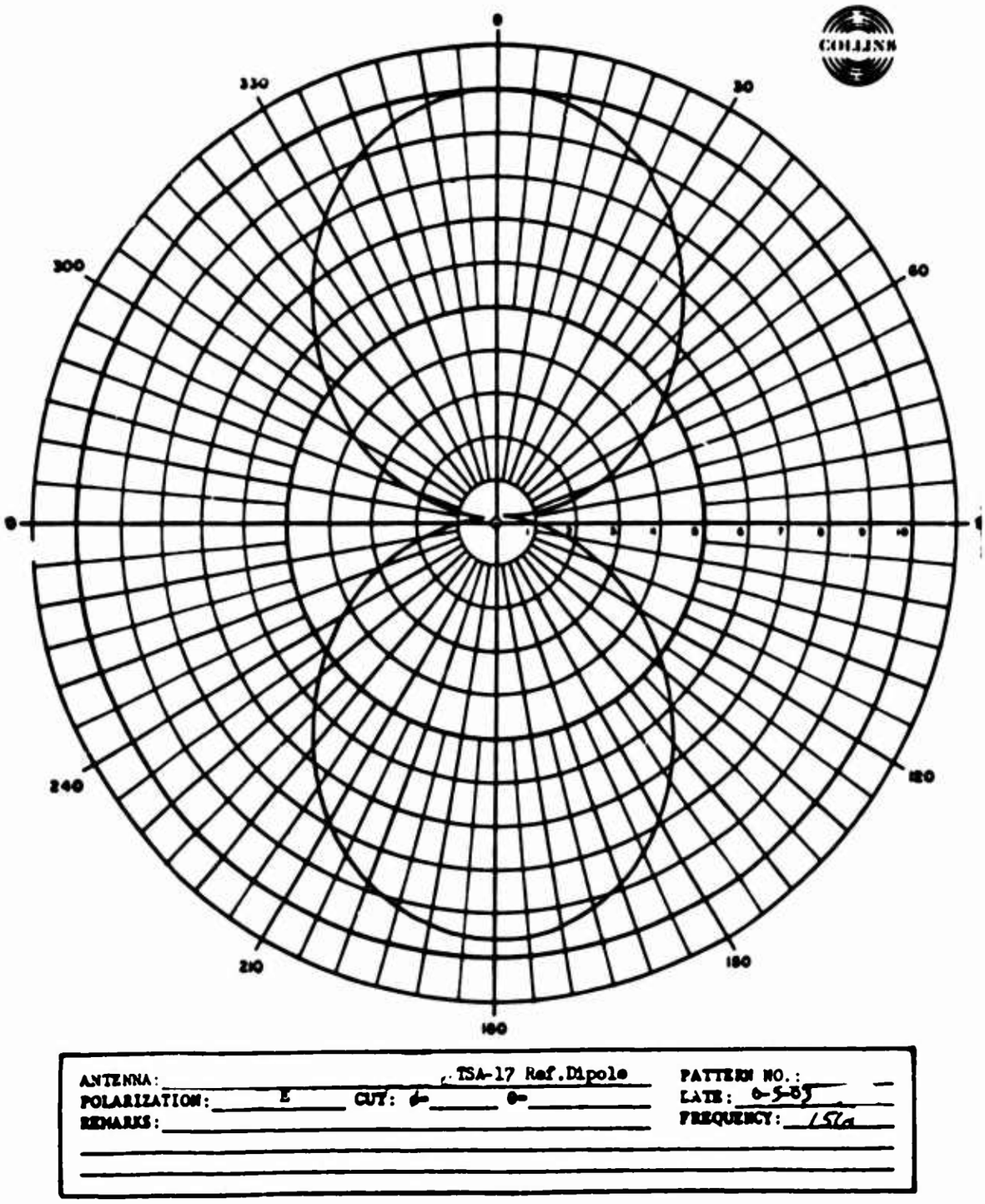

Figure 9. Polar Chart E-Plane Pattern Taken on the 1/30 Reference Dipole at 156 mc

a. Pattern and Gain

Patterns were recorded on polar charts for the following frequencies which were generated on the basis of 10 percent logarithmic increments and rounded off to the nearest megacycle.

60	129	276	591
66	141	303	650
73	156	334	715
80	171	367	787
88	188	404	865
97	207	444	900
106	288	488	952
117	250	537	

The free space directive gain was computed from:

$$G(db) = 10 \log_{10} \frac{41253}{BW_E \; BW_H}$$

Sample radiation pattern data is listed below:

Front to back ratio (fmc)	(db)	3 db BW_E (degrees)	3 db BW_H (degrees)	Direction gain $(10 \log_{10} \frac{41253}{BW_H \; BW_E})$
60	1.6	93	-	-
117	5.4	79	275	2.8
171	14.5	72	118	6.9
276	16.5	63	120	7.4
334	18.5	67	131	6.7
404	16.5	63	121	7.3
537	14.5	60	110	8.0
715	18	56	115	8.1
900	18	77	105	7.1

b. Group Erection

It was required that the antenna group be erected to full operational status in less than two hours by five men. The antenna array was erected to full operational status, then dismantled and repacked into transit cases, leaving the driven anchors in the ground.

A second timing test was executed during which the anchor positions were laid out and marked, and the antenna erected to full operational status.

Five men unpacked and erected the group in 1.6 hours. It was observed that two men could drive an anchor in three minutes; however, this figure is unrealistic as the men would be exhausted if they maintained this pace in setting 26 anchors. A more realistic figure is five minutes per anchor. Erection time test results were satisfactory.

c. Measured Weight

The antenna was dismantled, packed in transit cases, and weighed. Weights are as follows:

Case Number 1 22" x 22" x 16" ID	154 pounds
Case Number 2 22" x 22" x 19.5" ID	165 pounds
Case Number 3 22" x 22" x 16" ID	153 pounds
Tower transit (contains 13 panels and all long items)	132 pounds
Tower transit case (contains 16 panels)	118 pounds
Total	840 pounds

The total weight was 15 pounds over the specified weight in specification MIL-A-27140(USAF). Certain items could be made lighter and one winch could be removed in order to meet the weight requirements. However, this trade-off weight for ease, safety and time of erection is not prudent. In addition, it was decided to replace the 4-pound driving hammer with an 8-pound unit for easier anchor driving. This (plus other minor changes) will result in an overall weight of 850 pounds.

In view of the advantages offered, an 850-pound weight is acceptable. TAC was advised of the above and concurs.

d. Bounce and Shock

Bounce and shock tests were conducted on the antenna group in a stored condition. Minor deficiencies occurred. Steps have been taken to prevent recurrence in final articles. Results were satisfactory.

e. Power Handling

Test Apparatus:

Transmitter, Collins 204C1

Signal Generator, Hewlett-Packard 606

Frequency Counter, Hewlett-Packard 5245L

Transmitter, Collins 208U-10

The equipment was assembled as shown in Figure 10. The transmitter output was connected to the antenna input by a 200-foot length of Andrews Type FHJ5-50 RF cable and a 30-foot length of RG117/U RF cable.

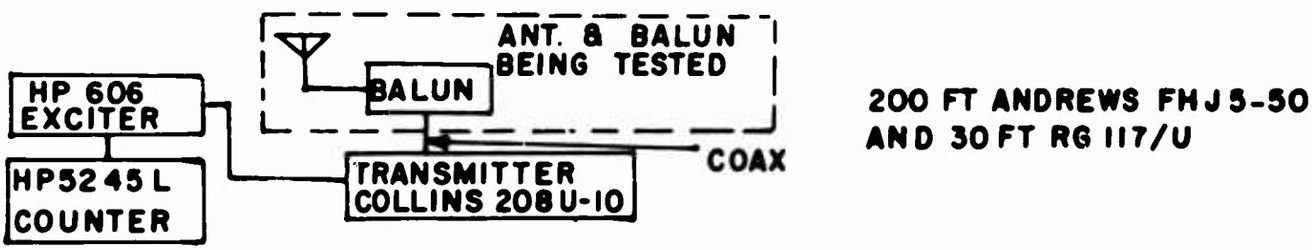

Figure 10. Power Handling Test Setup

Listed below is a sample of the readings.

Freq (mc)	Line A Atten (db)	Line B Atten (db)	Elapsed Time (hrs)	Lower Incident (kw at xmtr)	Power Reflected (kw at xmtr)	Power to Antenna (kw)
21.727	.72	.112	3.5	3.5	0.18	2.84
2.398	.224	.0325	6	3.0	0.3	2.80
13.145	.550	.084	8	3.0	0.1	2.57

Line A - Cable length 200-foot cable, Andrews Type FHJ5-50
Line B - Cable length 30-foot cable, Type RG117/U

The transmitter was tuned to 21.727 mc and 3.0 kw cw power was applied for 3.5 hours, 3.5 kw was applied for 2.5 hours and 3.6 kw was applied for 2.5 hours. The power reaching the antenna was corrected for line loss of the transmission line. This was 2.44 kw, 2.84 kw and 2.92 kw respectively.

The transmitter was tuned to 13.145 mc and 3.0 kw cw power was applied for 8.0 hours. This is 2.5 kw when corrected for line attenuation.

The transmitter was tuned to 2.398 mc and 3.0 kw cw power was applied for 8.0 hours. This is 2.80 kw when corrected for attenuation.

Test Results

The forward and reflected power was recorded at 0.2, 3.5, 4.6 and 8.5 hours at 21.727 mc.

At 13.145 mc and 2.398 mc it was recorded every two hours for eight hours. There were no visible signs of arcing, corona or other type of failure. Results were satisfactory.

f. Group VSWR

The equipment was assembled as in Figure 11. A 30- foot length of RG117/U cable was connected between the balun input and the VSWR meter.

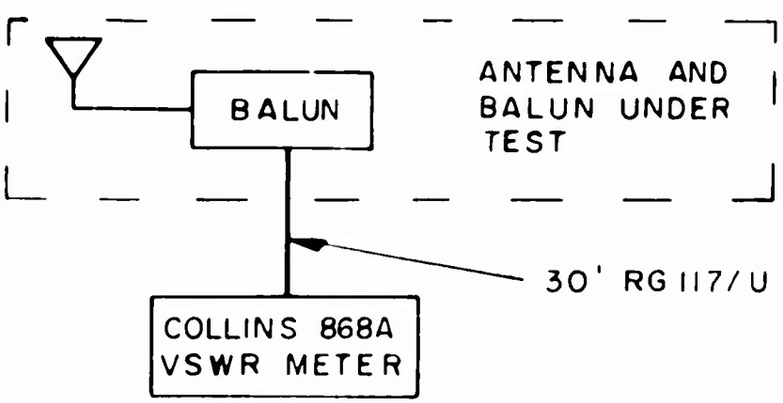

Figure 11. Group VSWR Test Setup

Test Procedure

The VSWR meter was calibrated for each band used. The frequency range from 2-30 mc was scanned with the VSWR meter. The VSWR meter was recalibrated with the 2:1 load at the peaks and nulls.

The VSWR peaks and nulls were recorded and are on file at RADC. The maximum VSWR observed was 2.1:1 at 2.64 mc and 2.1:1 at 30.0 mc. The VSWR was not corrected for cable attenuation as the VSWR group test was intended only to determine those frequencies at which the VSWR exceeded specifications in MIL-A-27140(USAF).

During the engineering prototype impedance test, using the bridge method, the impedance was measured and data tabulated at all peaks and nulls observed in the above test. The VSWR determined from the impedance tests were corrected for both bridge error and cable attenuation.

The results show that at 2.64 mc the corrected VSWR is 2.02:1 and at 30 mc the corrected VSWR is 2.26:1.

Test Results

VSWR specifications for the antenna are - not greater than 2:1 over frequency range of 6 through 30 mc, 2.5.1 in the 5-6 mc range and 3:1 in the 2-5 mc range. Maximum VSWR of 2.02:1 was observed at 2.64 mc and 2.26:1 at 30 mc. Results were satisfactory. Following are sample readings of the impedance and VSWR data:

fmc	$X_i f$	$X_f f$	R ohms	Cor. R ohms	X ohms	Rot.	R ± Jx	VSWR	Cor. VSWR
2	200	191	39	39	-4.5	0.0885	0.97 - J.26	1.32	1.323
2.4	200	240	33	33	16.7	0.106	0.58 - J.13	1.8	1.81
3.2	200	136	56.5	56.5	-20	0.1414	1.3 + J.34	1.49	1.497
6.4	200	72.5	40	40	-19.9	0.2829	0.82 + J.42	1.63	1.643
10.5	200	362	40.5	41.1	15.4	0.464	0.95 + J.39	1.49	1.5
14.0	500	128	79	81	-26.6	0.119	1.20 + J.68	1.89	1.92
19.8	500	305	46	48.5	-9.85	0.375	0.82 + J.0	1.22	1.227
25.3	500	418	28.5	30.8	-3.24	0.118	0.95 - J.47	1.63	1.66
30.0	500	192	21.5	24	-10.5	0.325	0.82 + J.7	2.20	2.26

g. Impedance

Test Instruments

RF Bridge, General Radio 1606, Serial 1007
Signal Generator, Hewlett Packard 606
Detector, Collins 51J3 Receiver

The equipment was assembled as in Figure 12. A 30-foot length of RG117/U cable was connected from the balun input to the VSWR meter.

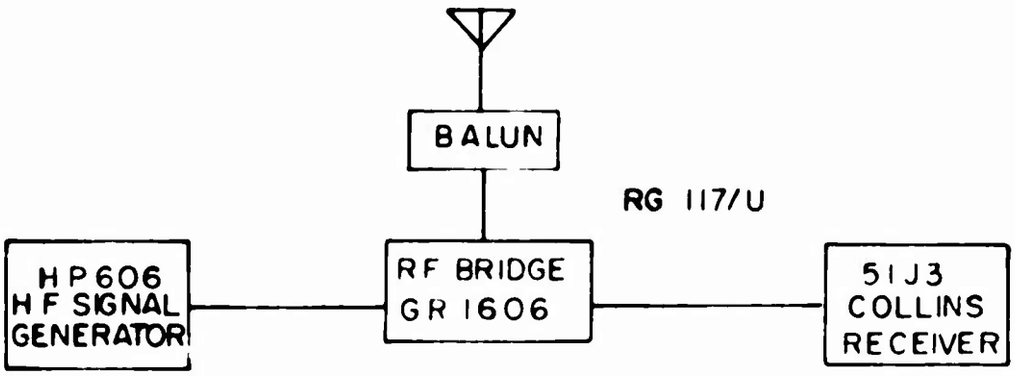

Figure 12. Unbalanced Bridge Connection for Antenna Impedance Measurements

Test Procedure

The bridge was balanced, readings were taken at peaks and nulls which were observed during the group VSWR tests and for frequencies in the 2-30 mc region generated on a 5 percent logarithmic increment.

The raw data was corrected for electrical rotation of the RF cable; resistive components were corrected using bridge correction curves; then the normalized corrected and rotated impedance was plotted on Smith Charts and recorded on the data sheet.

The VSWR was determined and corrected for cable attenuation and the corrected VSWR was plotted on the data sheet. Figure 13 shows the relationship of corrected VSWR (50 ohm) versus frequency. Figure 14 is a Smith Chart plot of a portion of the data.

h. Balun

(1) VSWR

Test Apparatus

VSWR meter, Collins 868A
200-ohm load

The equipment was assembled as shown in Figure 15.

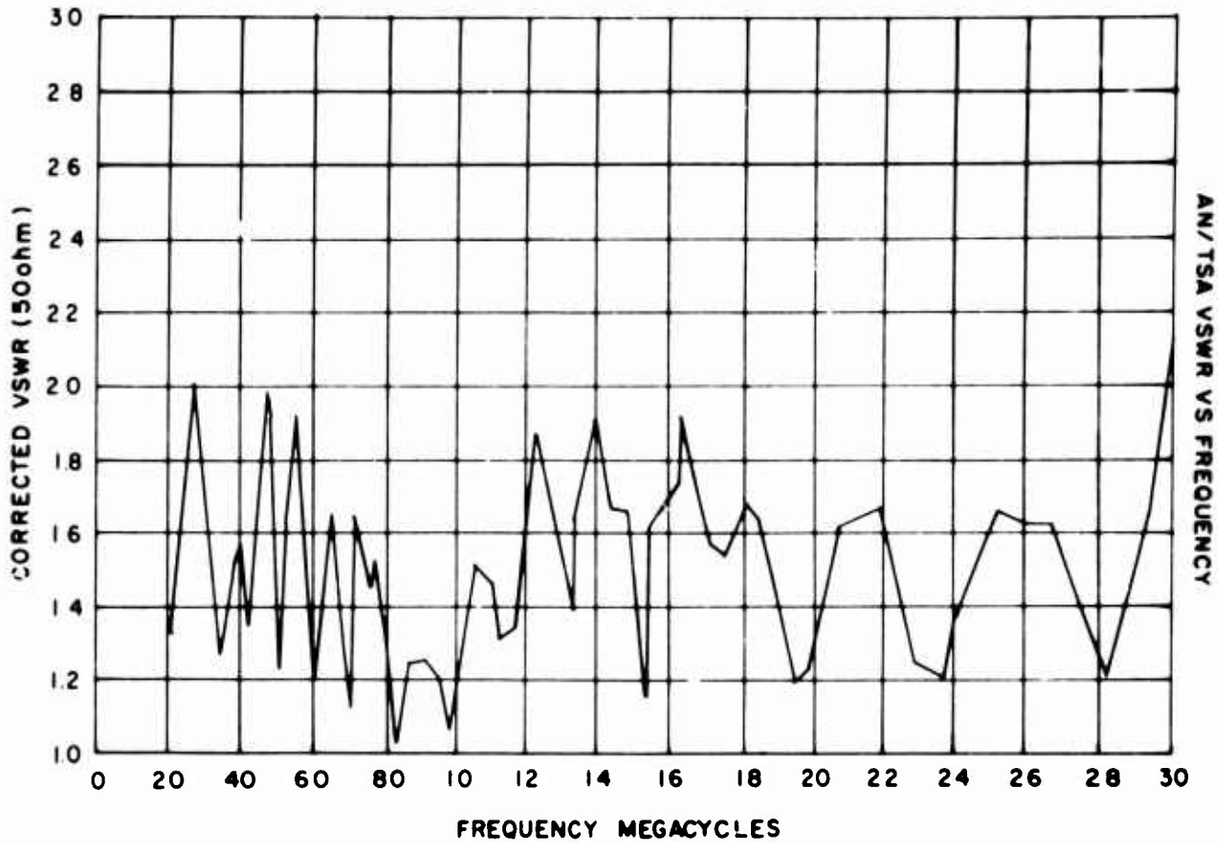

Figure 13. Corrected VSWR (50 ohm) vs Frequency Curve

Test Procedure

The VSWR meter was calibrated and the 2-30 mc region was scanned for peaks. A VSWR of 1.07:1 was observed at 18 mc. The 2, 18, 30 mc points were recorded as this test was performed only to detect any spikes in the VSWR over the 2-30 mc range. None over 1.1 appeared at any peaks; the VSWR meter was recalibrated using a 2:1 load.

fmc	VSWR
2	1.1
18.0	1.07
30	1.05

Balun transformer VSWR test results were satisfactory.

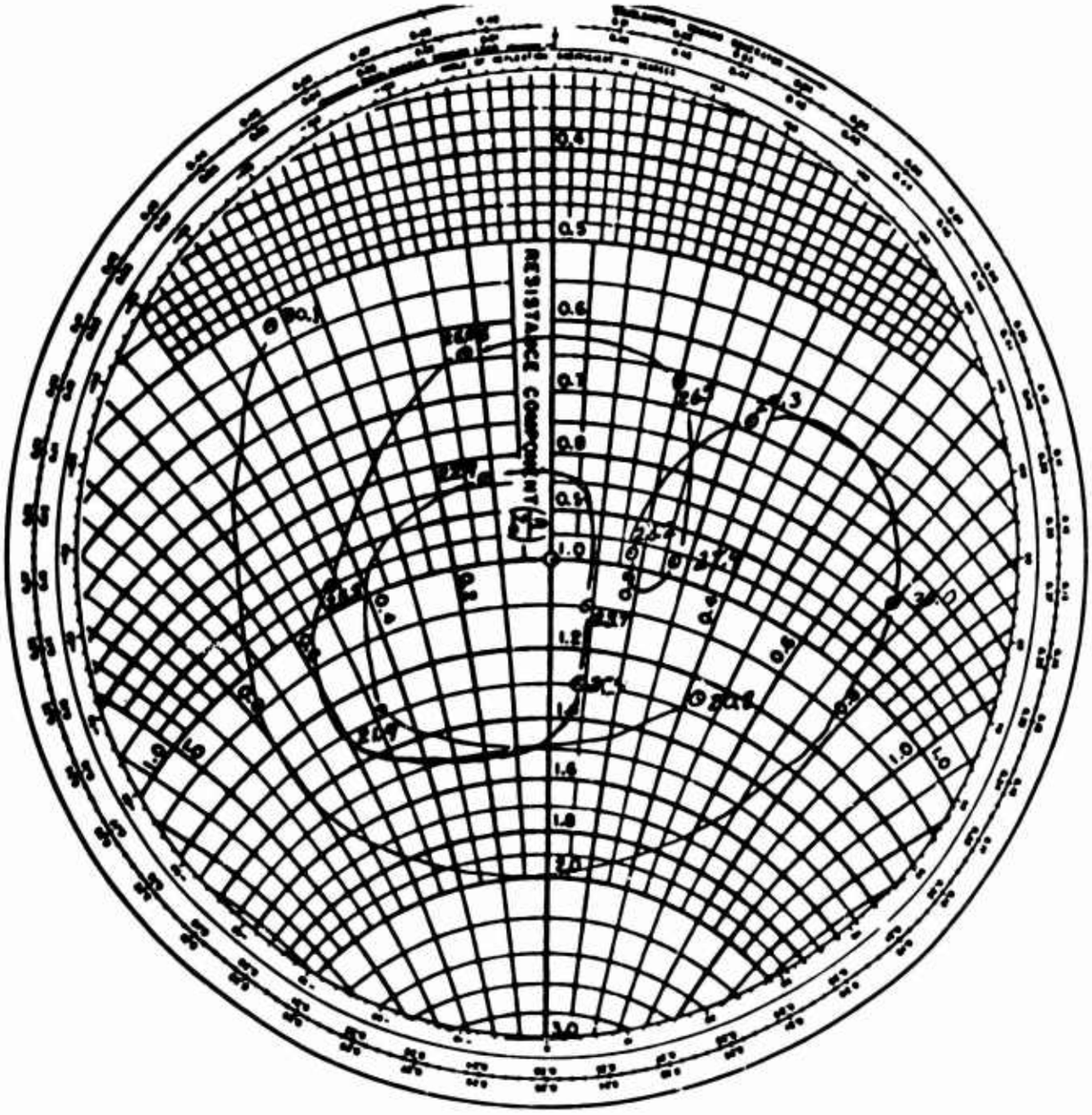

Figure 14. Sample Smith Chart of Engineering Prototype Impedance

Figure 15. Balun VSWR Test Connections

(2) Impedance Test

Test Instruments

RF Bridge, General Radio 1606
Signal Generator, Hewlett-Packard 606
Detector, Collins 515J3

The equipment was assembled as shown in Figure 16.

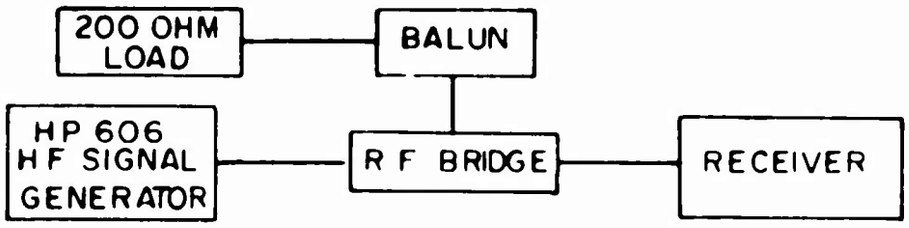

Figure 16. Balun Impedance Test Connections

Test Procedure

The bridge was calibrated and data taken at 5 percent logarithmic increments. The raw data was reduced and plotted on a Smith Chart. In addition, the test results were recorded on the data sheet.

Test Results

The maximum VSWR was 1.13:1 at 15.5 mc. The results were satisfactory. Following are sample readings of the balun impedance test:

fmc	$X_i f$	$X_f f$	R ohms	Cor. factor	Cor. R ohms	X ohms	r ± Jx	Rot.	VSWR
2	100	104	50.5	1.0	50.5	2	1.01 + J.04	0	1.04
3.6	50	62	54.2	1.0	54.2	3.33	1.084 + J.0667	0	1.11
8.2	50	72	53	1.0	53	2.69	1.06 + J.0538	0	1.07
10.5	50	69	54.3	1.0	54.3	1.81	1.08 + J.0362	0	1.09
15.5	50	47	54.8	1.032	56.6	-0.194	1.132 - J.0038	0	1.13
21.9	50	18	50	1.064	53.2	-1.46	1.064 - J.0292	0	1.07
27.9	50	63	47	1.101	51.8	0.466	1.03 + J.0093	0	1.04

In addition to the impedance and VSWR tests, the balun was subjected to the following tests: power, high temperature, low temperature, low pressure and rain. Results were satisfactory.

Component part samples of the antenna, such as element assembly, lower assembly guy adjustor, wind curtain sheaves assembly and terminations assembly were subjected to low temperature, high temperature and salt fog tests. Results were satisfactory.

REFERENCES

1. DuHamel, R. H. and Isbell, D. E., "Broadband Logarithmically Periodic Antenna Structures," IRE Convention Record, Part I, 1957, pp. 119-128.

2. Bell, R. L., Elfving, C. T., and Franks, R. E., "Near-Field Measurements on a Logarithmically Periodic Antenna," Technical Memorandum, EDL-M231, 23 December 1959, Sylvania Electric Products, Inc., Electronic Defense Laboratory.

3. Carrel, R. L., Analysis and Design of the Log-Periodic Dipole Antenna, University of Illinois Antenna Laboratory Technical Report No. 52.